Timing:

- Every Nuclear Ice bow cam is marked with dots called “timing dots” to assist with evaluating and setting the timing of each bow. Your dealer, when periodically timing this bow, will use these as a reference for cam synchronization. As timing requires a bow press, it is strongly recommended to have your dealer perform timing adjustments.
- After timing adjustments have been made, closely inspect the back profile of your bow’s cams to ensure that cam lean is not occuring. If cam lean is noticed, have your dealer twist up one or both sides of the cable split yoke to eliminate the issue.

Arrow Inspection

Always inspect each arrow for damage before each shot. To inspect the arrow, hold it on both ends and flex it away from yourself and others while visibly and audibly checking for nicks, cracks, splits, dents or other marks that could indicate damage to the arrow. Perform the test four to six times, rotating around the entire arrow. Always check all arrow components prior to shooting, including nock, insert and tip. Loose components can cause unbalanced arrow flight and partial dry firing of the bow. If an arrow has been damaged, or if you believe it has been damaged, do not shoot it again, as it could break on release, and sharp arrow pieces could strike and injure you or someone nearby.

For information regarding bow maintenance, strings and cables, troubleshooting and safety, please refer to the 2009 Diamond Owner’s Manual included with your bow.

REGISTER YOUR NEW DIAMOND BOW AT DIAMONDARCHERY.COM

DIAMOND ARCHERY

90554 HWY 99 NORTH, EUGENE, OREGON 97402

TOLL FREE: 877.447.0293 FAX: 541.284.4933

DiamondArchery.com

Every effort has been made to ensure the accuracy of information and typographical content within our owner’s manual. Diamond reserves the right to modify and/or discontinue products without notice and at its discretion.
© 2009 Diamond by BowTech. All rights reserved.

OM_Nuclear_DMD09_012.indd 1 4/8/09 12:13:30 PM

IPR2024-00524
Ravin EX1012 Page 1

NUCLEAR ICE INSTRUCTIONS

Congratulations on your purchase of the Diamond Nuclear Ice bow. Please read through this owner manual addendum completely before operating. Keep the owner manual in a safe place for future reference. If you have any questions, please call 1-877-447-0293

BEFORE USING YOUR NEW DIAMOND BOW, READ AND UNDERSTAND THE FOLLOWING MATERIAL OUTLINED ON THESE PAGES AND IN THE 2009 DIAMOND OWNER MANUAL. FAILURE TO FOLLOW ANY OF THESE WARNINGS AND INSTRUCTIONS CAN DAMAGE THE BOW AND MAY CAUSE SERIOUS INJURY TO YOURSELF AND/OR OTHERS.

Disclaimer of Liability: By accepting a Diamond product, the buyer agrees to hold harmless Diamond and all associated parties from liability for any damage to persons or property, which may result, for any reason, from the use of this product.

GENERAL PRECAUTIONS

- **ADULT SUPERVISION OF ALL CHILDREN UNDER THE AGE OF 18 IS REQUIRED.**
- Never aim the bow at another person.
- Attend a certified hunter safety course.
- Never draw or fire a bow without an arrow on the bow string. NOTE: A DRY-FIRE CAN SEVERELY DAMAGE THE BOW AND WILL VOID THE WARRANTY.
- Fully inspect the bow's components for wear and tear before shooting (e.g. cams, limbs, strings, cables, module screws and set screws).
- Periodically wax strings and cables to reduce wear and extend the life of these crucial components.
- If the bow is dry-fired, do not attempt to fix it yourself as serious injury could occur. Instead, take the bow to your authorized Diamond dealer and have it inspected and repaired.
- Any adjustment made to one end of the bow should be mirrored on the opposite end.

DRAW LENGTH ADJUSTMENTS

1. Remove the set screw from the barrel nut found under the pocket on the riser using a 3/32" allen wrench **(See Figure 1).**
2. Fully tighten the limb bolt with a ¼" allen wrench. NOTE: The bow should now be at peak weight.
3. To reduce draw weight, use the ¼" allen wrench to loosen the limb bolt. **WARNING: NEVER LOOSEN THE LIMB BOLT MORE THAN 10 FULL TURNS! IF YOU**

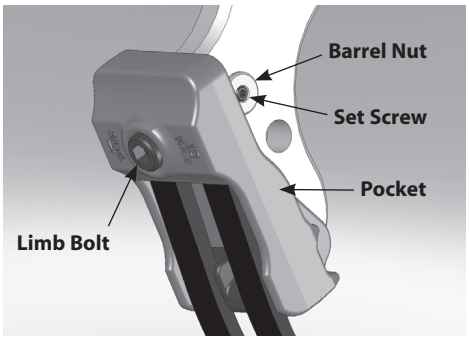

Figure 1

OM_Nuclear_DMD09_012.indd 2 4/8/09 12:13:30 PM

IPR2024-00524
Ravin EX1012 Page 2

DRAW LENGTH ADJUSTMENTS CONT.

CAN SEE THROUGH THE SET SCREW HOLE, THEN YOU HAVE BACKED THE LIMB BOLT OUT TOO FAR! Depending on the setting of your bow *(See "A" and "B" Settings information below)*, follow the appropriate chart below for further direction.

4. After making the adjustment, replace the 3/32" set screw with an allen wrench and tighten until snug.
5. Repeat this process on the other end of the bow.

THE "A" AND "B" SETTINGS

Every Nuclear Ice bow has the ability to be adjusted from 29 lbs to 10 lbs of draw weight and from 14-24" draw length. To accomplish this full range of adjustment, there is an "A" and "B" setting to which the bow must be set beforehand. The "A" setting is factory pre-set for optimal performance for higher draw weights and longer draw lengths. The "B" setting is used for lower draw weights and shorter draw lenghts. The following information will discuss adjusting draw weight and draw length in both settings:

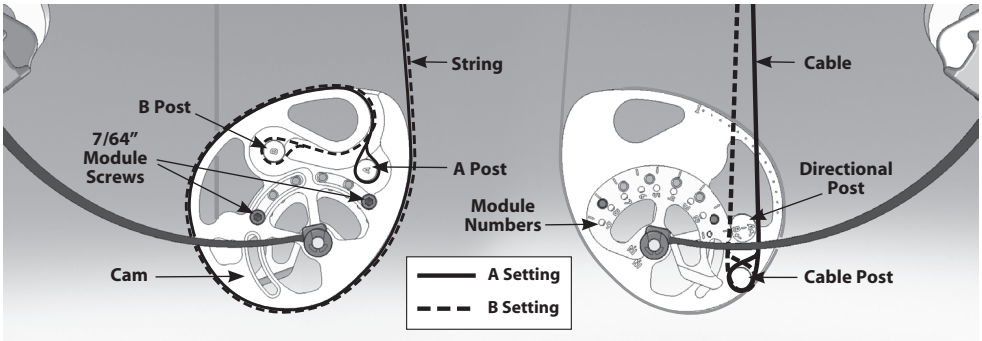

Figure 2. The Nuclear Ice bottom cam, (both sides).

The "A" Setting:

The "A" setting is factory pre-set and is identifiable by the way the string and cables attach to both the top and bottom cams. On both cams the string should attach to the machined post in the cam with an "A" engraved alone on it **(see Figure 2)**.

The cable, which attaches to the other side of the cam, should attach to the cable post after passing near the "A" side of a directional post as shown on the right side of **Figure 2**.

Be sure that both the top and bottom cams have string and cables attached in this fashion.

OM_Nuclear_DMD09_012.indd 3 4/8/09 12:13:31 PM

IPR2024-00524
Ravin EX1012 Page 3

"A" Setting Draw Weight/Length Chart:

	Module Number								
	1	**2**	**3**	**4**	**5**	**6**	**7**	**8**	**9**
Estimated Peak Weight (lbs.)	29	29	29	29	29	29	29	29	29
AMO Draw Length† (in.)	24	23	22	21	20	19	18	17	16
Backed-out 10 Turns Weight* (lbs.)	19	19	19	19	19	19	19	19	19
AMO Draw Length (in.)	24 1/4	23 1/4	22 1/4	21 1/4	20 1/4	19 1/4	18 1/4	17 1/4	16 1/4

†Draw weight measurement after the limb bolt has been fully tightened.
*Draw weight measurement after the limb bolt has been fully loosened.

As you can see from the above chart, the "A" setting allows for draw weight adjustments between 29-19 lbs. Draw length can be adjusted from 24"-16."

The "B" Setting:

The "B" setting is normally used for low draw weight (10-19lbs) and/or short draw length (14-15") shooters. Like the "A" setting, it is identifiable by the way the string and cables attach to both the top and bottom cams. **NOTE:** *As this is not a factory pre-setting, have your dealer use a bow press to change the bow from "A" to "B" setting.*

On both cams the string should attach to the machined post in the cam with a "B" engraved alone on it **(See Figure 2)**.

The cable, which attaches to the other side of the cam, should attach to the cable post after passing near the "B" side of a directional post as shown on the right side of **Figure 2**. **NOTE:** *Depending on the pliability of the cable loop, you may need to remove the rotating module in order to position the cable properly.*

Be sure that both the top and bottom cams have string and cables attached in this fashion.

"B" Setting Draw Weight/Length Chart:

	Module Number								
	1	**2**	**3**	**4**	**5**	**6**	**7**	**8**	**9**
Estimated Peak Weight (lbs.)	25.3	24.1	23.7	22.8	22.1	21	19.2	17.4	15
AMO Draw Length† (in.)	22 3/4	21 5/8	20 1/2	19 1/2	18 1/2	17 1/2	16 3/8	15 1/8	14
Backed-out 10 Turns Weight* (lbs.)	19.1	16.2	15.6	14.9	14.1	13.5	12.5	11	9.6
AMO Draw Length (in.)	23 3/16	22 1/8	21	19 15/16	18 7/8	17 7/8	16 3/4	15 5/8	14 3/8

†Draw weight measurement after the limb bolt has been fully tightened.
*Draw weight measurement after the limb bolt has been fully loosened.

As you can see from the above chart, the "B" setting allows for draw weight adjustments between 25.3 lbs-9.6 lbs. Draw length can be adjusted from 22.75"-14."

OM_Nuclear_DMD09_012.indd 4 4/8/09 12:13:31 PM