PHD 22/2000

Syringe Pump Series

User's Manual

PHD 22/2000 Series	*MA1 70-20xx*
PHD 22/2000 High Force Series	*MA1 71-20xx*
PHD 22/2000 Remote Series	*MA1 70-21xx*
PHD 22/2000 High Force Remote Series	*MA1 71-21xx*
PHD 22/2000 Hpsi	*MA1 70-2023*

HARVARD
APPARATUS

Publication 5400-008-REV-F

NanoString Exhibit 1031.001

WEEE/RoHS Compliance Statement

EU Directives WEEE and RoHS

To Our Valued Customers:

We are committed to being a good corporate citizen. As part of that commitment, we strive to maintain an environmentally conscious manufacturing operation. The European Union (EU) has enacted two Directives, the first on product recycling (Waste Electrical and Electronic Equipment, WEEE) and the second limiting the use of certain substances (Restriction on the use of Hazardous Substances, RoHS). Over time, these Directives will be implemented in the national laws of each EU Member State.

Once the final national regulations have been put into place, recycling will be offered for our products which are within the scope of the WEEE Directive. Products falling under the scope of the WEEE Directive available for sale after August 13, 2005 will be identified with a “wheelie bin” symbol.

Two Categories of products covered by the WEEE Directive are currently exempt from the RoHS Directive – Category 8, medical devices (with the exception of implanted or infected products) and Category 9, monitoring and control instruments. Most of our products fall into either Category 8 or 9 and are currently exempt from the RoHS Directive. We will continue to monitor the application of the RoHS Directive to its products and will comply with any changes as they apply.

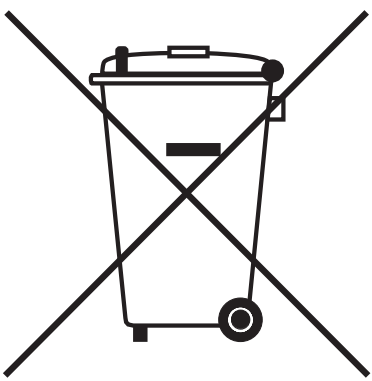

- **Do Not Dispose Product with Municipal Waste**
- **Special Collection/Disposal Required**

NanoString Exhibit 1031.002

Table of Contents

SUBJECT	PAGE NO.
General Information:	
Manual Description	4
Warranty	4
Repairs	4
Serial Numbers	4
Calibrations	4
General Safety Summary	**5**
Technical Specifications	**6**
Theory of Operation	**7**
Features:	
Pressure and Speed	8
Built-in Syringe Table and Custom Syringes	8
Infusion and Refill Rates	8
Target Volume	8
Auto Fill	8
Modes of Operation	8
External Connections	9
Nonvolatile Memory	9
Stall Detection	9
Visual/Audible Alarm	9
Power Up Options	9
Program Storage	9
User Interface:	
Description of Keys	11-13
Special Features Table	13
Entering Data	14
Initial Setup:	
Fuse Replacement	16

Publication 5400-008-REV-F

NanoString Exhibit 1031.003

Table of Contents

SUBJECT	PAGE NO.
Operation:	
Syringe Loading	17-19
Running the Pump	20
Diameter	20
Infuse Rate	20
Refill Rate	20
Target Volume	21
Auto Fill	21
Selecting the Run Mode	21
Program Mode:	
Program Description	22
Entering a Program	22
Sequence Operation	23-26
Program Printout	26
Program Run Time Error Messages	26
External Control and Interfaces:	
RS-232™ Devices	27
Configuring Pump for RS-232™ Devices	27-28
User I/O Devices	28
Programming Tutorial:	
Multiple Infusion Example	29
Ramping Up Infusion Rate Example	30
Multiple Dispensing Example	31
Periodic Dispense Loop Example	32
Combination of Infusion and Withdraw Profiles Example	33
Use of Events	34-35
Pump Chain Commands:	
Model 22 Protocol	37-38
Model 44 Protocol	39

Publication 5400-008-REV-F

NanoString Exhibit 1031.004

Table of Contents

SUBJECT	PAGE NO.

Appendices:

A	Table of Syringe Diameters	48
B	Stainless Steel Syringe	49-50
C	Nominal Min/Max Flow Rates	51
D	Custom Applications	52
E	PHD 22/2000 to PC Connection	52
F	RS-232 Specifications	53
G	Symphony	53
H	User I/O Connector Specifications	54
I	Maintenance and Troubleshooting	55
J	'Auto-Fill' Valves	56
K,L,M	Accessories and Spare Parts	57-59

FIGURE	PAGE NO.

Figure 1	Keypads	11
Figure 2a	Rear Panel and Serial Number Label	15
Figure 2b	Remote Unit Connection	15
Figure 3	Fuse Replacement	16
Figure 4	Syringe Loading	18
Figure 5	Rear Panel External Connections	27
Figure 6	Multiple Infusions	29
Figure 7	Ramping Up Infusion Rate	30
Figure 8	Multiple Dispensing	31
Figure 9	Periodic Dispense Loop	32
Figure 10	Comb. Infusion & Withdraw Profiles	33
Figure 11	Use of Events	34
Figure 12	Use of TTL Signal	35
Figure 13	PHD 22/2000 to PC Connection	52
Figure 14	RS-232 Specifications	53
Figure 15	User I/O Connector Specifications	54
Figure 16	'Auto-Fill' Valves	56

NanoString Exhibit 1031.005

CAUTION: REFER TO SECTION 7, INITIAL SETUP BEFORE PLUGGING IN PHD 22/2000 PUMP.

MANUAL DESCRIPTION

This manual is designed to provide all operational and program information required to operate and maintain the PHD 22/2000 series pumps. The functions and features are described in the Technical Specifications section.

WARRANTY

Harvard Apparatus warranties this instrument for a period of two years from date of purchase. At its option, Harvard Apparatus will repair or replace the unit if it is found to be defective as to workmanship or materials. This warranty does not extend to damage resulting from misuse, neglect or abuse, normal wear and tear, or accident. This warranty extends only to the original consumer purchaser.

IN NO EVENT SHALL HARVARD APPARATUS BE LIABLE FOR INCIDENTAL OR CONSEQUENTIAL DAMAGES. Some states do not allow the exclusion or limitation of incidental or consequential damages so the above limitation or exclusion may not apply to you. **THERE ARE NO IMPLIED WARRANTIES OF MERCHANTABILITY, OR FITNESS FOR A PARTICULAR USE, OR OF ANY OTHER NATURE.** Some states do not allow this limitation on an implied warranty, so the above limitation may not apply to you.

If a defect arises within the two-year warranty period, promptly contact ***Harvard Apparatus, 84 October Hill Road, Holliston, Massachusetts 01746*** using our toll free number 1-800-272-2775, or outside the U.S. call 508-893-8999. Email Address is bioscience@harvardapparatus.com. Goods will not be accepted for return unless an RMA (returned materials authorization) number has been issued by our customer service department. The customer is responsible for shipping charges. Please allow a reasonable period of time for completion of repairs or replacement. If the unit is replaced, the replacement unit is covered only for the remainder of the original warranty period dating from the purchase of the original device.

This warranty gives you specific rights, and you may also have other rights which vary from state to state.

REPAIR FACILITIES AND PARTS

Harvard Apparatus stocks replacement and repair parts. When ordering, please describe parts as completely as possible, preferably using a part number obtained from our Customer Service department. If practical, enclose a sample part or sketch. We offer a complete reconditioning service.

SERIAL NUMBERS

All inquiries concerning our product should refer to the serial number of the unit, located on the rear panel (See Figure 2).

CALIBRATIONS

All electrical apparatus is calibrated at rated voltage and frequency. While the flow and volume will stay calibrated, the peak pressure may vary.

CAUTION: Not for clinical use on human patients.

Publication 5400-008-REV-F

NanoString Exhibit 1031.006

General Safety Summary

Please read the following safety precautions to ensure proper use of your syringe pump. To avoid potential hazards and product damage, use this product only as instructed in this manual.

To Prevent Hazard or Injury:

Use Proper Line Cord

Use only the specified line cord for this product and make sure line cord is certified for country of use.

Ground the Product

This product is grounded through the grounding conductor of the power cord. To avoid electric shock, the grounding conductor must be connected to earth ground. Before making any connections to the input or output terminals of the product, ensure that the product is properly grounded.

Make Proper Connections

Make sure all connections are made properly and securely. Any signal wire connections to the unit must be no longer than 3 meters.

Observe all Terminal Ratings

Review the operating manual to learn the ratings on all connections.

Use Proper Fuse

Use only specified fuses with product.

Avoid Exposed Circuitry

Do not touch any electronic circuitry inside of the product.

Do Not Operate with Suspected Failures

If damage is suspected on or to the product do not operate the product. Contact qualified service personnel to perform inspection.

Place Product in Proper Environment

Review the operating manual for guidelines for proper operating environments.

Observe all Warning Labels on Product

Read all labels on product to ensure proper usage.

CAUTION
Refer to Manual

Protective Ground Terminal

Publication 5400-008-REV-F

NanoString Exhibit 1031.007

Specifications

	PHD 22/2000 SYRINGE PUMP SERIES	PHD 22/2000 VHP REMOTE SYRINGE PUMP SERIES
Accuracy	± 0.35%	± 0.5%
Reproducibility	± 0.05%	± 0.05%
Syringes (Min./Max.)	0.5 µl / 140 ml	Holds 20 to 200 ml stainless steel syringes
Flow Rate:		
Minimum	0.0001 µl/hr (with 0.5 µl Syringe)	1.5 µl/hr
Maximum	220.82 ml/min (with 140 ml Syringe)	112 ml/min
Calibration	Automatic	Automatic
Display	2 line, 40 char. fluorescent	2 line, 40 char. fluorescent
Non-Volatile Memory	Stores all settings	Stores all settings
RS-232 Interface	Multiplexed dual bidirectional ports	Multiplexed dual bidirectional ports
RS-232 Connectors	RJ11-4 cond. phone plug	RJ11-4 cond. phone plug
TTL Connectors	9 pin D-Sub. connector	9 pin D-Sub. connector
Linear Force (Max):		
Standard	23 kg (50 lbs)	196 kg (433 lbs)
High Force	30 kg (66 lbs)	N/A
Drive Motor	1.8° Stepper Motor	1.8° Stepper Motor geared
Motor Drive Control	Microprocessor from 1/2 to 1/32 microstepping	Microprocessor from 1/2 to 1/32 microstepping
Motor Step per one Rev. of Lead Screw	From 800 to 12,800	From 8,000 to 128,000
Step Rate:		
Minimum	27.3 sec/step	27.3 sec/step
Maximum	416.7 µsec/step	416.7 µsec/step
Pusher Travel Rate:		
Minimum	0.18 µm/min	0.09 µm/min
Maximum	190.676 mm/min	71.210 mm/min
Power	100-240 VAC: 50/60 Hz	100-240 VAC: 50/60 Hz
	50 W, 0.5 A fuse	50 W, 0.5 A fuse
Dimensions	16.3 x 22.8 x 27.9cm (6.4 x 9 x 11in)	9.9 x 27.9 x 22.9 cm (3.9 x 11 x 9 in)
Syringe Holder	N/A	22.9 x 43.2 x 30.5 cm (9 x 17 x 12 in)
Remote Cable Length	N/A	152 cm (60 in) approx.
Weight	4.5 kg (10 lb)	

Publication 5400-008-REV-F

NanoString Exhibit 1031.008

Theory of Operation

All models in the PHD 22/2000 series employ a microcontroller which controls a small step angle stepping motor that drives a lead screw and Pusher Block. Micro-stepping techniques are employed to further reduce the step angle, eliminating flow pulsation. A keypad is used for entry of operating data to the pump. Data can also be entered via an RS-232 connector located on the rear panel. The microcontroller, using the internal Syringe Look Up Table, calculates the cross-sectional area of the syringe selected and calibrates the flow rate and volume accumulation. The numerous features of the PHD 22/2000 series result from the use of microprocessor technology.

The PHD 22/2000 Infuse/Withdraw model is equipped with all the functions of the PHD 22/2000 Infusion model along with additional features to provide the Withdraw (Refill) function. The PHD 22/2000 Infuse/Withdraw model's additional features include two additional function keys on the keypad, REFILL RATE key and the INFUSE/REFILL key and the addition of syringe Retaining Brackets and Adjustable Stops for refill. Use of the REFILL RATE key, the INFUSE/REFILL key, Retaining Brackets and Adjustable Stops are all described in detail in section 6 and 8 of this manual.

The PHD 22/2000 Programmable model is equipped with all the functions of the PHD 22/2000 Infuse/Withdraw model along with additional features to provide Programmable functions. The PHD 22/2000 Programmable models additional features include two additional function keys on the keypad, the PROGRAM key and the AUTO FILL key. Use of the PROGRAM key and the AUTO FILL key are described in detail in section 6 of this manual.

NanoString Exhibit 1031.009

Pressure and Speed

PHD 22/2000 can deliver up to 220.82 ml/minute with a single 140 ml syringe. Maximum pressure is dependent on syringe size.

Built-In Syringe Table and Custom Syringes

The user may select the syringe to be used from the pump's built-in syringe table. Syringes are arranged according to manufacturer and material, and then according to size. The pump will look up and use the diameter for the syringe you select. (See Appendix A for a listing of the standard syringes.)
If a syringe is to be used, which is not listed in the syringe table, enter the inside diameter of the syringe in millimeters.

Infusion and Refill Rates

Specify independent rates for infusing and refilling. This allows a slow infusion rate then a fast refill. If Refill Rate is not set, the software defaults to the set Infuse Rate value.

Target Volume

Specify the volume that is to be infused or refilled. The pump will run at the rate specified until this volume has been delivered when in the Volume mode.

Auto Fill

Auto Fill automatically activates an externally attached solenoid (refer to Appendix L for part number) and refills the syringe when it is empty. This permits infusions to be virtually independent of syringe capacity.

Modes of Operation

Pump:
Runs continuously in the infuse or refill directions until stopped.

Volume:
Runs until a specified volume has been pumped or refilled.

Program:
Pump operates according to a specified sequence of instructions.
Note: All modes interact with Auto Fill.

Gang Mode:

Enter the number of syringes contributing to the total output of your system. Valid numbers are 1 to 9. This mode is used when multiple syringes are combined to give a single output flow (assumes all syringes are of the same diameter/size). Commands for the mode are only available through RS232 (not keypad).

NanoString Exhibit 1031.010

External Connections

User I/O

Allows pump operations to be synchronized with external devices or by a person at a distance from the pump. Connector pins are available to control direction of pump travel to control an external valve for refilling, and for general use. A simple contact closure to ground or TTL level signals may be used for inputs. (See Section 10 and Appendix H.)

RS-232

Multiple pumps can be 'daisy chained' together and remotely controlled from a computer or any device communicating via RS-232.

A scale can be connected, enabling the pump to infuse by weight instead of by volume. (Section 10).

A printer can be connected to record final volumes or weights whenever the pump stops. In addition the program entered for the program mode can be listed on a connected printer. Both a scale and a printer may be connected simultaneously. (See Section 10).

Remote Unit (Catalog No's. MA1-70-21xx and MA1-71-21xx Only)

Allows connection to the remote syringe pump unit. The remote unit may be positioned up to 30 feet away from the control unit.

Nonvolatile Memory

All operational data entered into the pump from the keypad or from a computer will be stored, including the program. On power up, the display will blink until the pump receives its first command and all settings from when it was powered down will be recalled.

Stall Detection

An optical detector is used to verify expected movement of the motor. If the motor is prevented from turning due to jamming or excessive back pressure, the pump will stop and the display will read: PUMP STALLED.

Visual/Audible Alarm

After a power interruption the alarm can be selected to be a silent flashing display or an audible signal in addition to flashing display. Refer to Section 6 for details on setting the Alarm Mode.

Power-Up Options (Pump Mode Only)

Enables the user to select between a standby mode (waiting for a command to begin running) after power is interrupted or a restart mode that begins running the pump at the settings that were in process when the power was interrupted. Refer to Section 6 for details on setting the power-up mode.

Program Storage

Programmable model can store up to 4 sets of 9 program sequences for later selection.

NanoString Exhibit 1031.011

The user interface consists of a keypad with a display area The display consists of a 2 line, 40 character alphanumeric vacuum fluorescent display.The display will show one of three types of messages: Default display, setting display, or an informational message.

The top line of the display is divided into three sections.The first consists of the delivered volume, or time interval remaining in an operation, expressed with 5 digits plus a decimal point. Next is the units of the previous number expressed as 'ml' for milliliters, 'g' for grams, if a scale is attached, or 'time' for a time interval.Third is the pumping direction, either 'INFUSE' or 'REFILL', or the current operating state of the pump. A diamond symbol ◊ in the last character of the display indicates pump chain communication has been received.

Setting displays are used to facilitate entering control information and data into the pump. Data entry will be discussed in detail later in this section

Informational messages occur at various times to indicate such items as a data setting out of range, or a detected problem, such as the pump stalling. Pressing any key clears the message from the display.

The second line of the display is also divided into 3 sections.The first is the Running Mode (Pump, Vol, Prog). The second section is the AutoFill indication (no message if Auto Fill is Off, If On, AutoFill ON is displayed) The third section is a pair of directional arrow heads (< or >) indicating that the pump is running and in what direction.

The keys are used for entering control information and data into the pump.These keys are grouped into 3 sections (see Figure 1): Set keys, Toggle keys, and Data Entry keys.

NanoString Exhibit 1031.012

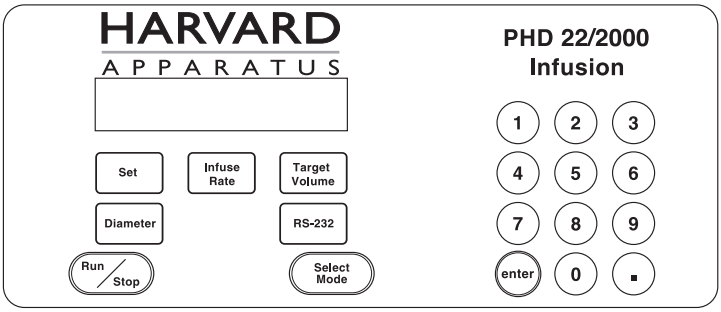

Figure 1a. Infusion Model Keypad.

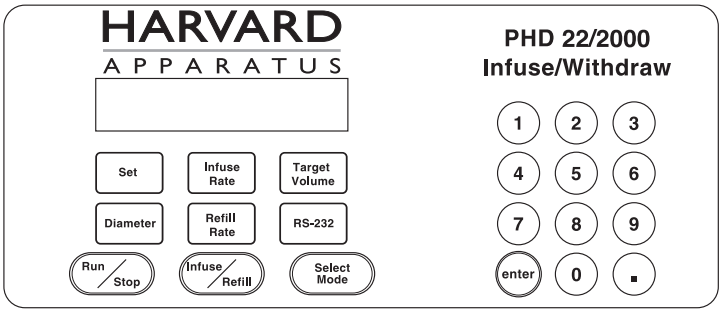

Figure 1b. Infuse/Withdraw Model Keypad.

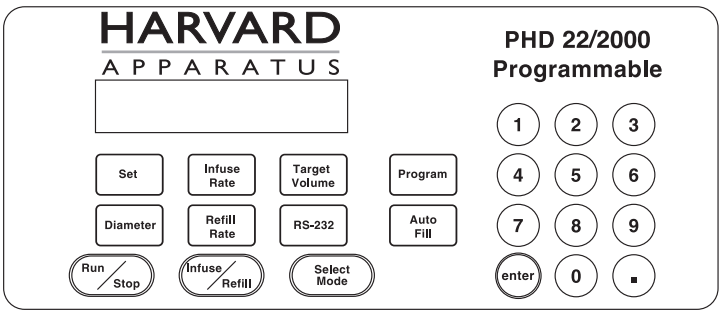

Figure 1c. Programmable Model Keypad.

NanoString Exhibit 1031.013

Set Keys

SET – Allows modification of a data item in this group of keys. To modify a data item, press the relevant key after pressing the SET key. Pressing Set with an appropriate data entry key will also allow the selection of special features. Refer to **Entering Data** on page 13.

INFUSE RATE – Displays/sets current infuse rate. Scrolls through rate units with each press of the key when setting. Displays current programmed rate while running in program mode.

TARGET VOLUME – Displays/sets current volume mode target volume.

PROGRAM – Displays current program number, program sequence and sequence number. Held down, with a printer attached and the pump stopped, prints a program listing.

DIAMETER – Displays/sets current syringe diameter. When held down during setting, accesses built-in syringe table.

REFILL RATE – Displays/sets current refill rate. Scrolls through rate units with each press of the key when setting.

RS-232 – Displays/sets current RS-232 device(s) attached.

AUTO FILL – Turns Auto Fill feature setting on/off. Also, displays/sets syringe refill volume.

Toggle Keys

in this group, when permitted, successive states of the keys' function are selected when the key is pressed.

RUN/STOP – Starts/stops–interrupts running of pump.

INFUSE/REFILL – Changes direction of pusher block travel during operation in Pump and Volume modes. Pump must be stopped or in Pump Mode to reverse direction of pump.

SELECT MODE – Toggles in an incremental loop through PUMP, VOLUME or PROGRAM run modes with each press of the key. The current mode is displayed on the 2nd line of the display.

Data Entry Keys

1, 2, 3, 4, 5, 6, 7, 8, 9, 0, . – Used to enter numeric data values or access special features.

ENTER – Saves and stores displayed data value in memory when setting a data item.

NanoString Exhibit 1031.014

Set Keys

Keys with rectangular outlines in this group are used to modify or review settings of the pumps control data. To review the current setting of a control data item, simply hold down the relevant key and the data setting will appear in the top line of the display. In the case of the PROGRAM key, if it is held down the data will be sent to the printer if one is attached.

To modify a data setting, first press then release the green outlined SET key. The display should then read 'SET WHAT?'. Press the key in the SET key group whose data is to be modified. The display will display the current setting. Data is entered into the pump by either entering a numerical value or by scrolling through a menu of choices. Always press the green outlined ENTER key to terminate and store each data request by the pump.

If you are to enter a numerical value, the far left of the display will show 'ENTER' followed by the units of the number to be entered. Using the numerical keys on the right side of the keypad (see Figure 1) enter the new data value. Up to five digit numbers are accepted, including up to four decimal places.

Entering more than five digits will clear the previous five digits entered in the display. Press the green outlined ENTER key when the desired data value is displayed.

If the far left of the display does not show 'ENTER', then a menu of choices is being displayed. Pressing the relevant key, according to the choices being displayed, selects successive menu entries. When the desired selection is displayed, press the green outlined ENTER key.

If the data value entered is outside the pump's operating parameters, the display will read 'OUT OF RANGE'. Pressing any key will restore the display with the original data value. Enter another data value within the pump's parameters or just press the green outlined ENTER key to reuse the original data value.

The data value entered can be reviewed as described above. Note: Certain data items have multiple settings. For these, after the ENTER key is pressed, the display will prompt you for the additional information. Various rules apply to when, what and how data can be set at various times. See the relevant section for further details.

SPECIAL FEATURES ACCESS TABLE

Pressing the green outlined SET key and then the appropriate numerical key will allow the setting of several special features. Pressing the appropriate numerical key again will scroll between the options provided. Refer to the table below. When the desired option is displayed, press the green outlined ENTER key.

RS-232 Protocol	SET	1
Alarm Mode	SET	2
Power Up Mode	SET	3

NanoString Exhibit 1031.015

Step	Key	Setting RS-232 Protocol	Description
1	SET	SET WHAT? Pump Mode	Press and release SET key
2	1	MODEL 44 PROTOCOL Pump Mode	Press and release 1 key Current RS-232 protocol displayed
3	1	MODEL 22 PROTOCOL Pump Mode	Press and release 1 key to change RS-232 protocol
4	enter	XXXXX ml INFUSE Pump Mode	Press ENTER to accept + return to main display

Step	Key	Setting Alarm Mode	Description
1	SET	SET WHAT? Pump Mode	Press and release SET key
2	2	ALARM: VISUAL ONLY Pump Mode	Press and release 2 key Current alarm mode displayed
3	2	ALARM: VISUAL & AUDIBLE Pump Mode	Press and release 2 key to change alarm mode
4	enter	XXXXX ml INFUSE Pump Mode	Press ENTER to accept and return to main display

Step	Key	Setting Power-Up Mode	Description
1	SET	SET WHAT? Pump Mode	Press and release SET key
2	3	POWER UP: STANDBY Pump Mode	Press and release 3 key Current power-up mode displayed
3	3	POWER UP: RUNNING Pump Mode	Press and release 3 key to change POWER-UP mode
4	enter	XXXXX ml INFUSE Pump Mode	Press ENTER to accept and return to main display

NanoString Exhibit 1031.016

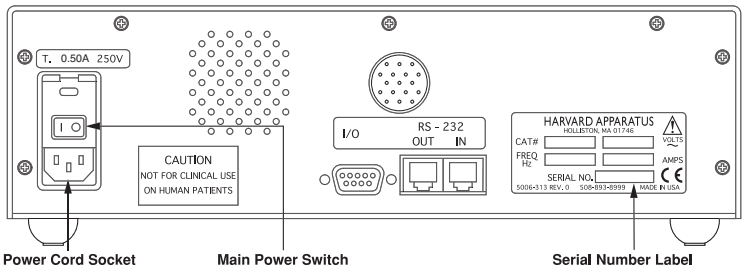

Figure 2a. Rear Panel: Power Entry and Serial Number Label

1. Read the entire manual to become familiar with all features and functions of the PHD 22/2000.

2. The operating voltage range for the PHD 22/2000 is 100 - 240 VAC, 50/60 Hz. Use only the specified line cord for this product and make sure line cord is certified for country of use.

3. Take this opportunity to fill out and mail the Warranty Card. The Catalog and Serial numbers are located on the Serial Number label on the rear panel. Refer to Figure 2a.

4. Turn on main power switch (see Figure 2a) located directly above the power cord receptacle on the rear panel. The two-line display will illuminate indicating that the power connections are correct. The flashing display indicates that power has just been applied. Pressing any key will reset the blinking display to constant illumination .

5. See Section 8 for operating Instructions on next page.

6. Fuse Replacement. Turn off power, remove power cord from power module. Use straight blade screw driver, pry open access door. Remove fuse holder, remove fuse(s) from holder. Replace fuse(s) and fuse holder. For continued fire protection, replace fuse only with 250 V fuse of the specified type and rating. (3 AG 0.50 AMP SLO-BLO) (See Figure 3.)

7. Remote Unit Connection (Catalog no's. MA1-70-21xx, MA1-71-21xx and MA1-70-2023 only). Connect the control unit to the remote pump unit with the cable provided.

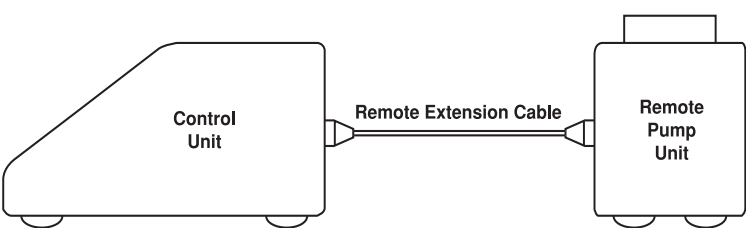

Figure 2b. Remote Unit Connection

NanoString Exhibit 1031.017

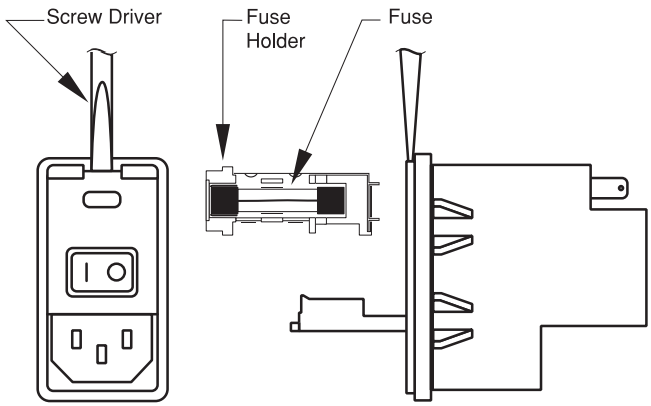

Figure 3. Fuse Replacement

Because of the wide range of functions that the PHD 22/2000 is capable of performing, certain information about your application must be entered into the pump. At minimum, the pump needs to know the diameter of your syringe, the infusion rate and direction of travel.

This is the only information needed to run the pump in the Pump Mode. If not specified, the refill rate will default to the infuse rate. The pump will need additional information to utilize its more advanced features. See Section 6, User Interface, for general information on data entry.

CAUTION:
Use in manner not specified by the manufacturer may impair the protection provided by the equipment.

NanoString Exhibit 1031.018

SYRINGE LOADING

Standard with a 2 Syringe Holder

The Pusher Block (2) and Syringe Holder Block (3)are fitted with movable retaining brackets (4 and 5) (Available as an option for the PHD 22/2000 Infusion model as an Anti-siphon kit - Catalog # MA1-70-2015)which hold the syringe barrel and plunger firmly when refilling.When loading the syringe into the pump it is necessary to adjust these retaining brackets and the Adjustable Stops (8 & 9).The Pusher Block (2) is fitted with Release Tabs (1) to release the drive nut from the leadscrew so that the Pusher Block (2) can be moved freely on the leadscrew to facilitate loading the syringe. Refer to Figure 4.

1. Squeeze the Release Tabs (1) towards each other and move the Pusher Block (2) to the left allowing enough space for the syringe being used to fit between the Pusher Block (2)and the Syringe Holder Block (3).
2. Loosen the four screws to free the retaining brackets (4 and 5) on the Pusher Block (2)and Syringe Holder Block (3). This step is not required for the PHD 22/2000 Infusion model which is not equipped with retaining brackets (4 & 5) or Adjustable Stops (9).
3. Locate Syringe Clamp (6) and determine if clamp is in the correct position to firmly hold the desired syringe. Rule of thumb is that if the syringe is 20ml or larger, the tips of the clamp should be pointing down. If it is required to change the orientation of the clamp, unscrew the plastic knob located in the center of the clamp by turning it counter-clockwise (to the left). Remove the knob, lift the clamp off the shaft, flip the clamp over and place back on the shaft, then tighten the knob by turning it clockwise (to the right).
4. Lift up on the spring loaded Syringe Clamp (6) and rotate it 90° to allow clearance for the syringe. Place the barrel of the syringe on to the Syringe Holder Block (3) and rotate the clamp over the syringe. Ensure that the syringe barrel flange and plunger flange are located within the retaining brackets on both the Pusher Block (2) and the Syringe Holder Block (3).This step is not required for the PHD 22/2000 Infusion model which is not equipped with retaining brackets or Adjustable Stops (9). Lower the Syringe Clamp (6) down onto the syringe. CAUTION: Do not let the Syringe Clamp snap down on the syringe. Doing so may crack or break a glass syringe.
5. Ensure that both retaining brackets (4 and 5) are tight against the syringe barrel flange and plunger flange, then tighten the screws on the retaining brackets on the Pusher Block (2) and the Syringe Holder Block (3).This step is not required for the PHD 22/2000 Infusion model which is not equipped with retaining brackets or Adjustable Stops.
6. Squeeze the Release Tabs (1) and move the Pusher Block (2) to the right until the syringe plunger is located as far into the syringe as it will travel.Then squeeze the Release Tabs (1) and move the Pusher Block (2) to the left just enough so that the end of the syringe plunger is not touching the inside end of the syringe barrel and release the Release Tabs (1).This step is not required for the PHD 22/2000 Infusion model which is not equipped with retaining brackets or Adjustable Stops.

NanoString Exhibit 1031.019

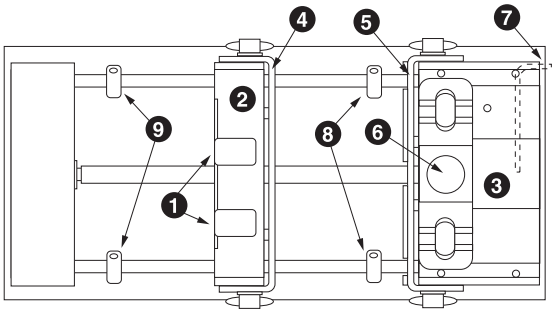

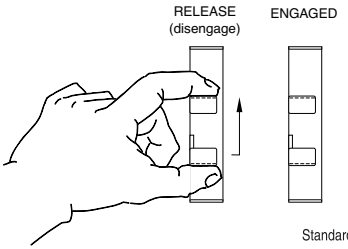

1. Release Tabs
2. Pusher Blocks
3. Syringe Holder Block
4. Retaining Bracket (Pusher Block)
5. Retaining Bracket (Syringe Block)
6. Syringe Clamps
7. Allen Wrench
8. Adjustable Stops (Infuse)
9. Adjustable Stops (Refill)

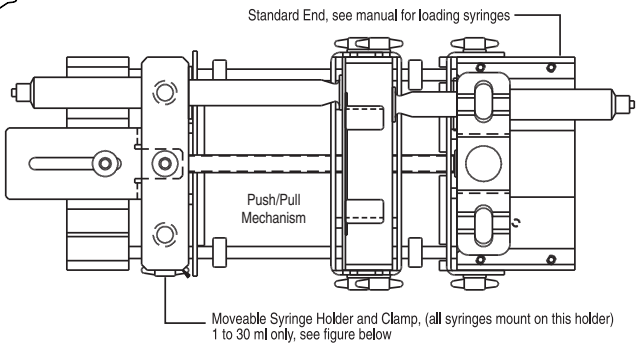

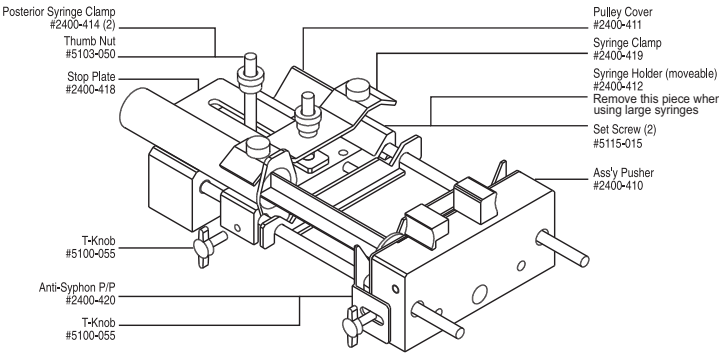

Figure 4. Syringe Loading: Infuse/Withdraw or Programmable model shown

NanoString Exhibit 1031.020

7. Locate Allen Wrench (7) in its holder on the back of the Syringe Holder Block and remove. Loosen front and rear Infusion Adjustable Stops (8) (right side) and slide them both to the left until they contact the retaining bracket (4). Using the Allen Wrench, tighten both Infusion Adjustable Stops (8).
8. Squeeze the Release Tabs (1) and move the Pusher Block (2) to the left until the syringe plunger is located as far out of the syringe as intended to travel. Then squeeze the Release Tabs (1) and move the Pusher Block (2) to the right just enough so that the end of the syringe plunger is just short of the maximum travel allowable and release the Release Tabs (1). This step is not required for the PHD 22/2000 Infusion model which is not equipped with retaining brackets or Adjustable Stops.
9. Loosen the front and rear Refill Adjustable Stops (9) (on the left side) and slide them both to the right until they contact the Pusher Block (2). Then using the Allen Wrench tighten both Refill Adjustable Stops (9) and return the Allen Wrench to its holder.

With Multiple Syringe Holder

Catalog Numbers - MA1-70-2003, MA1-70-2006, MA1-70-2009
These Versions of the PHD 22/2000 have a saw tooth syringe holder capable of holding up to ten syringes, emptying them simultaneously at identical rates. This multiple syringe pump will accommodate up to:

- Ten syringes of any size up to 10 ml
- Six syringes of 20ml- 100 ml

Catalog Numbers - MA1-70-2004, MA1-70-2007, MA1-70-2010
These Versions of the PHD 22/2000 have a multiple syringe holder which accommodates:

- Up to four syringes of 30ml to 140 ml

To load syringes rotate the spring loaded retainer arm out of the way and lay syringes in 'V' shaped slots with the syringe flange touching the holder. Rotate the retainer arm to hold syringes in place. If less than the maximum number of syringes are used, try to place them symmetrically about the lead screw to present a balanced load.

Maximum Force: The PHD 22/2000 will generate 50 lbs of force. With a 50 ml syringe it will deliver 25 psi.

Note: The back pressure for each syringe will be divided by the number of syringes used. Thus for four 50 ml syringes the maximum pressure developed in each syringe will be 6.3 psi.

Syringe Loading: Push/Pull Mechanism

1. Loading syringes on the standard end, see manual.
2. Loading syringes on push/pull end: 1 ml through 30 ml only.
   Remove (2) thumb nuts and syringe clamp. Place syringes on moveable syringe holder. Adjust syringe retainer using (2) set screws. Position moveable holder for correct stroke. Clamp on to guide rod with the T-knob. Lock stop plate in place with thumb nut. Place syringe clamp over syringes and lock in place with thumb nut.

NanoString Exhibit 1031.021

Running the Pump

Pressing the RUN/STOP key starts the pump. The pump will operate according to the relevant data entered as interpreted by the selected run mode. Pressing the RUN/STOP key while the pump is running stops the pump and the right side of the top line of the display will indicate 'INTERRUPT' plus '>' for infusing or '<' for refilling. This indicates that the pumping operation has been suspended and can be continued. Pressing the RUN/STOP key again will continue the pumping operation at the point that it was interrupted. Changing any of the settings, including the pumping direction and the run mode, cancels the interrupted operation and resets the display. The pump can also be started and stopped from a remote source.

Diameter

If the inside diameter of the syringe being used is known, enter the value in millimeters. Otherwise, access the built-in Syringe Table and select the syringe being used. After a new diameter is entered, directly or via the built-in Syringe Table, the Infuse Rate and Refill Rate are set to 0 and the Auto Fill feature is turned off. This is done for reasons of safety. The maximum diameter that can be entered is 99 mm.

To access the built-in Syringe Table, after pressing the SET key then the DIAMETER key, hold down the DIAMETER key for about one second. Once the Syringe Table has been accessed, each press of the key will scroll through the manufacturers. Find the manufacturer and material, if applicable, of your syringe. Press the ENTER key to enter your selection. Now, using the DIAMETER key again, scroll by pressing the DIAMETER key until the size of your syringe is displayed, in cc or µL, as indicated on the display. Pressing the ENTER key will select the size of the syringe and look up and store the diameter. The diameter will be displayed until the ENTER key is released. Thereafter, pressing the DIAMETER key will display the selected diameter. In addition, the syringe size selected becomes the default Refill Volume when the Auto Fill feature is turned on. See Appendix A for a listing of the built-in Syringe Table and their respective diameters.

Infuse Rate

The Infuse Rate is the rate of pumping while infusing in the Pump or Volume modes. Also, the Infuse Rate is used as a starting rate for the program model if one is not specified in the program, regardless of pumping direction.

When entering the Infuse Rate, the INFUSE RATE key is used to scroll through the allowable units of rate. The allowable units are: ml/mn, ml/hr, µl/mn, µl/hr. While running in the Pump or Volume modes, the Infuse Rate can be changed. If the new rate is valid, it will take effect when the ENTER key is pressed. The minimum and maximum rates permitted vary depending on the diameter of the syringe. If an 'OUT OF RANGE' message is displayed when entering a rate, try using a different syringe for your application.

Refill Rate (not applicable to the Infusion model)

The Refill Rate is the rate of pumping while refilling in the Pump or Volume Modes or during Auto Fill. If the Refill Rate hasn't been set (rate is 0), the Refill Rate will default to the Infuse Rate. When entering the Refill Rate, the REFILL RATE key is used to scroll through the allowable units of rate. The allowable units are: ml/mn, ml/hr, µl/mn, µl/hr. While running in the Pump or Volume modes, the Refill Rate can be changed. If the new rate is valid, it will take effect when the ENTER key is pressed. The minimum and maximum rates permitted vary depending on the diameter of the syringe. If an 'OUT OF RANGE' message is displayed when entering a rate, try using a different syringe for your application.

NanoString Exhibit 1031.022

Target Volume

The Target Volume is the volume that you desire to deliver at the set Infuse or Refill Rate. The pump must be set for this Volume mode for this feature to work. When entering the Target Volume, enter the volume desired in mls (milliliters) and press the ENTER key.

Auto Fill (Programmable model only)

Use AUTO FILL key to toggle between Auto Fill 'ON' and 'OFF'. If Auto Fill is set to 'ON', the pump will next request the volume of the syringe in milliliters. The volume of the syringe is used as the refill volume of the syringe. This volume can be set to a volume smaller than the syringe if desired.

When set to 'ON', the syringe is assumed to be empty. Auto Fill continuously monitors the volume of the syringe according to the volume pumped. When the pump determines that the syringe is empty, the operation in progress is suspended and Auto Fill is activated. The pumping direction is then reversed and the pump runs at the refill rate. During the Auto Fill operation, the display will indicate the volume of liquid in the syringe.

When the volume in the syringe reaches the set refill volume, Auto Fill will stop, and the previous operation of the pump will resume. Auto Fill continues to monitor the volume of the syringe. TTL direction output is toggled 'ON' during refill. Refill Rate defaults to Infuse Rate if not set.

Note: Auto Fill will only activate while infusing, (i.e., if the pump direction is set to Refill, the pump will not stop when the syringe is full.) Also, if the syringe plunger is manually moved, the pump will lose track of the true syringe volume.

Selecting the Run Mode

After entering any necessary operating data into the pump, select the pumping mode that will be used when the pump is operated. Pressing the SELECT MODE key advances the second line of the display to indicate the next run mode. Advance the run mode to the desired mode, either Pump Mode, Volume Mode or Program Mode until it is displayed.

Pump Mode

The pump will continuously pump, infusing or refilling, until stopped. While running, the Infuse and Refill Rates can be changed. The new rate, for the relevant pumping direction, takes effect when the ENTER key is pressed. Also, the pumping direction can be changed by pressing the INFUSE/REFILL key.

Volume Mode

The pump will run, infusing or refilling, until a specified target volume is pumped or refilled. The TARGET VOLUME key is used to enter the Volume Mode target volume. Used in conjunction with Auto Fill, the target volume can be greater than the volume of the syringe. While running, the Target Volume, Infuse and Refill Rates can be changed. The new rate, for the relevant pumping direction, takes effect when the ENTER key is pressed. Target Volume can be used to enter a Target weight in grams if a scale is attached via RS-232.

Program Mode

In the Program Mode the pump can make complex dispenses including changes in rate and target volume. These complex dispenses are easily programmed from the keypad and are detailed in the Program Mode and the Programming Tutorial sections.

NanoString Exhibit 1031.023

Program Description

A program is made up of a set of sequences. Each sequence being a set of operating instructions for the pump to follow. When the pump is started in the PROGRAM run mode, the pump will start at sequence 1 and execute the operating instructions in that sequence. When the pump has completed the instructions for a sequence, it will go to the next, or specified, sequence and execute the instructions in that sequence. The pump continues this process until it either has reached a 'STOP' operation, the pump is manually or remotely stopped, or the last sequence has been completed. 4 programs with up to 9 sequences each may be entered.

A sequence consists of a sequence number, indicating the order of the sequence; a mode, indicating what operation the sequence will be performing; and the actual data for the operation, such as rates and volumes. The necessary data specified for each sequence will depend on the strategy used.

One of two strategies may be chosen for a sequence's target. Strategy 1 (Target Volume) pumps until a target volume is reached, while Strategy 2 (Time Interval) pumps until a target time interval has lapsed. When Strategy 1 is used, enter a time interval of 0:00:00, then you will be prompted for the target volume. See the Programming Tutorial for example programs.

Entering a Program

It is advisable to plan out your program prior to entering the program into the pump. Press the SET key then the PROGRAM key to begin entering a program.

The following is a list of possible data that can be requested when entering a program and instructions on entering the data.

NanoString Exhibit 1031.024

Sequence of Operation

Use the PROGRAM key to select the sequence's operation. Operations that can be selected are: Profile, Increment (Incr), Decrement (Decr), Dispense, Event, Go To, Pause, Pump, TTL Out, Restart, Stop. When the required operation is displayed press the ENTER key. Additional information may be requested.

Rate

Enter the rate, using the INFUSE RATE key to change units. Note: If the rate entered is invalid, an error message will not be given at the immediate time of entry. An 'OUT OF RANGE' error message will be given during the running of the program.

Delta Rate

Enter the rate of Increment or Decrement desired. The units of the rate cannot be specified. Units will be the same as the units of the current pumping rate at the time the sequence is executed.

Target Volume

Enter the required delivered target volume of the sequence. For increment and decrement sequences, the target volume is an incremental target. An incremental target is added to the delivered volume at the start of the sequence.

Time Interval

Enter the time duration of the sequence in the form: 'hours : minutes : seconds'. If sequence Strategy 1 (Target Volume) is used, enter 0:00:00 for the time target. The maximum time interval is 9:99:99.

Number of Repetitions

Enter the number of times the sequence is to be repeated. The repetition number can be from 1 to 99,999.

Pumping Direction

Each sequence that specifies a pumping operation, also specifies a pumping direction. Use the INFUSE/REFILL key to change the pumping direction (< or >).

Pin Level

Select either HI or LOW for the logic level of the programmable output pin 4. Use the PROGRAM key to change the setting.

Go to sequence number

Enter the destination sequence to continue operation of the program. Valid sequence numbers are 1 to 9.

NanoString Exhibit 1031.025

Profile

Runs at specified flow rate until target volume is pumped or a time interval has elapsed. Travel direction is as specified.

Data Specified:

Strategy 1: (Volume)	Flow rate Time Interval = 00:00:00 Target volume Pumping direction
Strategy 2: (Time)	Flow rate Time interval Pumping direction

Incr

Increments current rate by specified value and pumps until the target volume is pumped or a time interval has elapsed. Units of rate will be that of the current rate of the pump or the infusion rate's units, if first sequence.

Sequence is repeated the specified number of times. Travel direction is as specified.

Data Specified:

Strategy 1: (Volume)	Delta flow rate Time Interval = 00:00:00 Volume increment Number of repetitions Pumping direction
Strategy 2: (Time)	Delta flow rate Time interval Number of repetitions Pumping direction

Decr

Same as INCR except rate is decremented.

NanoString Exhibit 1031.026

Dispense

Repeatedly dispense specified volume. Runs at specified flow rate until a volume is pumped or a time interval has elapsed, then pump will stop. If no time interval was specified (Strategy 1), the display will show 'TRIGGER' and the next dispense will begin after an external or keyboard run command. Otherwise, the sequence will pause for specified time interval. Sequence is repeated the specified number of times. Travel direction is as specified.

Data Specified:

Strategy 1: (Volume)	Flow rate Time Interval 00:00:00 Target volume Number of repetitions Pumping direction
Strategy 2: (Time)	Flow rate Target volume Time interval Number of repetitions Pumping direction

Event

Program Events – A program event is an external event defined as a high to low transition on TTL pin-9. Within a program, a one time event trigger can be set which watches for and acts upon the external event. The triggered event causes an immediate continuation of the program at the specified sequence and the operation of the pump will be according to this sequence.

Data Specified:

Go To sequence number

Go To

Causes the program to immediately continue operation at the sequence specified.

Data Specified:

Go To sequence number

Pause

Pump stops for specified time then continues with next programmed sequence. Current program rate set to 0, with no change in units.

Data Specified:

Time interval

Pump

Runs the pump continuously at the specified flow rate without any pumping target. This mode can provide a background flow rate while waiting for an external event to trigger a new sequence specified by the EVENT operation.

Data Specified:

Flow rate
Pumping direction

NanoString Exhibit 1031.027

TTL Out
Programmable TTL Pin. TTL output Pin 4 of the user I/O connector can be set to a HIGH or LOW level from within a program.

Data Specified:

TTL pin level

Restart
Immediately restart program from the first sequence.

Data Specified:

None

Stop
Stops pump and the program terminates.

Data Specified:

None

Program Printout

If a printer is attached and the pump is stopped, a program listing can be obtained by pressing the PROGRAM key for about one second. 'PRINTING PROGRAM' will be displayed while data is being sent.

Program Runtime Error Messages

If while running a program an operation is requested that cannot be performed, the pump will stop and an error message will be displayed. Error messages will be displayed with the following format:

Program N SEQ n: message
Where 'N' is the Program number and 'n' is the sequence number when an error was detected, and 'message' is the indicated error as follows:

INFINITE LOOP
A GO TO sequence cannot specify the current sequence.

INVALID GO TO
The target of the GO TO specified an invalid sequence number.

RATE UNDERFLOW
A decrement sequence decremented a rate to less than or equal to 0.

RATE OVERFLOW
An increment sequence caused an arithmetic overflow.

OUT OF RANGE
Specified or calculated rate is beyond the pumps capabilities with the specified syringe.

VOL TGT ERROR
A sequence with a volume target cannot follow a sequence with a time target, unless the volume delivered is zero or the pump is stopped at the start of the sequence entering it, select Program Mode using the SELECT MODE key and press the RUN/STOP key.

NanoString Exhibit 1031.028

RS-232 Devices

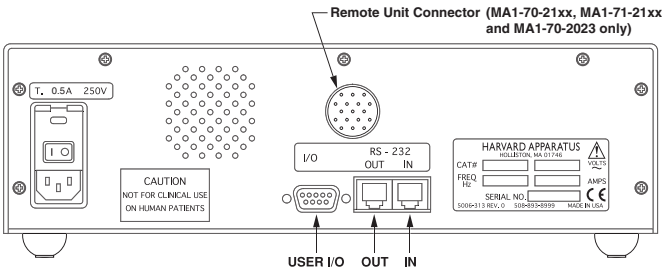

Figure 5. Rear Panel External Connections

External devices that can be attached to the PHD 22/2000 are categorized into either RS-232 devices or user I/O devices. Pump Chains, Scales and Printers are RS-232 devices, all other devices are user I/O devices. See the Appendix F for specification details on attaching RS-232 devices and Appendix H for user I/O specifications.

There are two telephone jack type connectors on the back of the unit (See Figure 5). These are the RS-232 ports. Looking at the back of the pump, the connector on the right is IN and the left is OUT. Attach the RS-232 connectors in the appropriate port according to the following chart:

Device	Port
Pump Chain computer side	IN
Pump Chain pump side	OUT
Scale	IN
Printer	OUT

Configuring the Pump for RS-232 Devices

Press the SET key and then press 1 to select either Model 22 or Model 44 Protocol (Refer to Section 12, Pump Chain Commands). Press the SET key, then use the RS-232 key to scroll through the menu of allowable RS-232 configurations. Possible configurations are:

Pump Chain
Scale
Printer
Scale & Printer

After entering the RS-232 configuration, additional information may be requested:

Pump Chain

Enter the 2-digit address assigned to the pump. Note: Each pump in the chain needs a unique address. After entering the address (up to 99), the baud rate will be requested. Use the RS-232 key to toggle between the supported baud rates: 1200, 2400 , 9600 and 19200. Note: Each pump in the chain must have same baud rate. See the Section 12, Pump Chain Commands for pump chain control information.

NanoString Exhibit 1031.029

Scale
Use the RS-232 key to toggle between the supported manufacturers: Mettler, Sartorius and Ohaus. When a scale is attached, the weight will be read from the scale and used as the delivered volume whenever the pumping direction of the pump is set to infuse. When refilling, the syringe diameter is used for volume calculations. When the scale weight is displayed, the units will be grams.

Printer
No additional information requested when entering. With a printer (capable of serial port communication) attached, the pump will print the delivered volume whenever the pump stops or the direction of pumping changes, except before and after Auto Fill of the syringe. If the pump stops due to the pump stalling, an asterisk (*) will be appended to the volume printed. In addition, the entered pump program can be listed on the printer by pressing the PROGRAM key for about one second, with the pump stopped.

User I/O Devices

The pump does not need to be configured to attach a user I/O device. Simply plug the device into the 9-pin connector on the rear of the pump. See Appendix I for wiring specifications.

Foot Switch or Relay
Used to start and stop the pump. Pressing the foot switch performs the same function as pressing the RUN/STOP key on the keyboard. The foot switch connector allows remote or automated operation of the pump.

Timer
Opening the timer input starts the pump. Closing the timer input stops the pump. The timer input allows for an externally controlled pumping interval.

Pumping Direction (not applicable for Infusion only models)
Sets the direction of pumping. Opening the directional input sets the pump to infuse. Closing the directional input sets the pump to refill. The pumping direction input is recognized only in the situations that the INFUSE/REFILL key would be recognized, i.e., when the pump is stopped or running in the Pump Mode.

Valve Control (not applicable for Infusion only models)
The valve control output is an indicator of the direction of pump travel. When the output is high, the pump is set to Refill. A low output indicates Infuse.

NanoString Exhibit 1031.030

In the following examples, the diameter is 26.7 mm and the infuse rate is 50 ml/mn. To run a program after entering it, select Program mode using the SELECT MODE key and press the RUN/STOP key. The examples on the following pages include: Multiple Infusions, Ramping Up Infusion Rate, Multiple Dispensing, Periodic Dispense Loop, Combination Infuse and Withdraw Profile, Use of Events and Use of Signal.

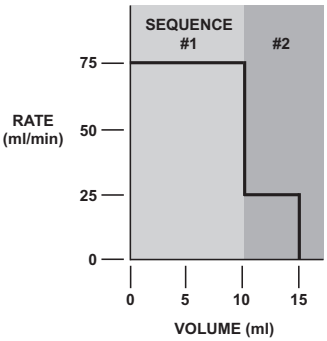

Figure 6. Multiple Infusions.

Multiple Infusion Example

The following program will instruct the pump to infuse according to the above graph. The program instructs the pump to infuse 10 ml at 75.000 ml/mn then infuse another 5 ml at 25 ml/mn then stop, for a total of three sequences. Since this graph is Rate vs. Volume, Strategy 1 will be used when entering the program.

SEQUENCE 1:

Key Presses	Explanation
SET	Allows selection of Programming mode
PROGRAM	Press until PROFILE selected
ENTER	Enters selection
75	Enter rate of 75.000 ml/mn
INFUSE RATE	Press until units are ml/mn
ENTER	Enters rate
0 ENTER	Enter 0 for the time, this indicates Strategy 1
10 ENTER	10 ml is the first target volume
INFUSE/REFILL	Toggles direction to infuse
ENTER	Enters sequence's pumping direction

SEQUENCE 2:

Key Presses	Explanation
PROGRAM	Press until PROFILE selected
ENTER	Enters selection
25	Enter rate of 25.000 ml/mn
INFUSE RATE	Press until units are ml/mn
ENTER	Enters rate
0 ENTER	Enter 0 for the time, this indicates Strategy 1
5 ENTER	5 ml is the second target volume
INFUSE/REFILL	Toggles direction to infuse
ENTER	Enter sequence's pumping direction

SEQUENCE 3:

Key Presses	Explanation
PROGRAM	Press until STOP selected
ENTER	Enters selection and ends program entry

PROGRAM PRINTOUT

```
PROG1 SEQ 1:  PROFILE
75.000 ml/mn
10.000 ml
INFUSE
PROG1  SEQ 2:  PROFILE
25.000 ml/mn
5.0000 ml
INFUSE
PROG1  SEQ 3:
STOP
```


NanoString Exhibit 1031.031

Ramping Up Infusion Rate Example

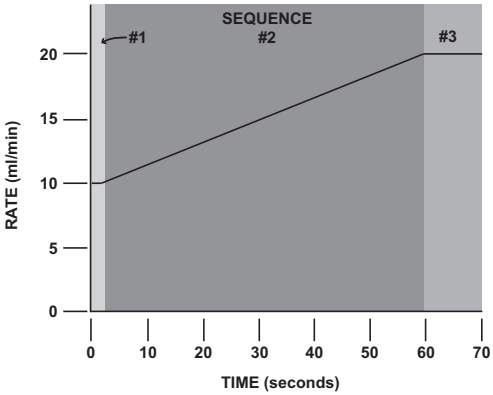

Figure 7. Ramping Up Infusion Rate

PROGRAM PRINTOUT

```
PROG1  SEQ 1:  PROFILE
10.000 ml/mn
0:00:01 INTERVAL
INFUSE
PROG1  SEQ 2:  INCR
0.1695 INCR
0:00:01 INTERVAL
INFUSE
59 REPEAT
PROG1  SEQ 3:  PROFILE
20.000 ml/mn
0:00:10 INTERVAL
INFUSE
PROG1  SEQ 4:  STOP
```

In this example, the pump will ramp up from 10 ml/mm to 20 ml/mn over 60 seconds, then continue to run at 20 ml/min for another 10 seconds.This is a Strategy 2 Program requiring four sequences:

1. Specify the initial rate as a profile of 10 ml/mn for one second.

2. Specify the ramp up to 20 ml/mn. Since the minimum resolution of an increment is one second, it will take 59 steps to reach the target rate. Sequence 2 starts at time 1 second and ends at time 60 seconds, giving it a duration of 59 seconds.

   At one second a step, 59 seconds divided by one second per step equals 59 steps. The increase per step will by 20 ml/mn minus 10 ml/mn, divided by 59 steps or 0.1695 rounded to four decimal places.

3. Continue running at 20 ml/mn for 10 seconds with a profile operation.

4. Stop the pump.

NanoString Exhibit 1031.032

Multiple Dispensing Example

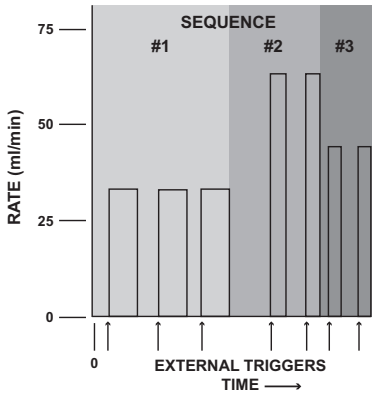

Figure 8. Multiple Dispensing

PROGRAM PRINTOUT

```
PROG1  SEQ 1:  DISPENSE
35.000 ml/mn
15.000 ml
3.  REPEAT
INFUSE
PROG1 SEQ 2:  DISPENSE
65.000 ml/mn
25.000 ml
2. REPEAT
INFUSE
PROG1 SEQ 3:  DISPENSE
45.000 ml/mn
17.000 ml
2. REPEAT
INFUSE
PROG1 SEQ 4:  STOP
```

Here, a series of dispenses are programmed. Each dispense is started by a trigger, such as pressing the RUN/STOP key or pressing an attached foot switch. Seven dispenses are programmed: three of 15 ml at 35 ml/mn, two of 25 ml at 65 ml/mn, and two of 17 ml at 45 ml/mn. The pump's display will show 'TRIGGER' when it is waiting for a run trigger and < or > will not be displayed.

This is a Strategy 1 dispense. A time interval of 0 is specified when entering a Strategy 1 dispense. Since the total volume to be dispensed is 129 ml and the syringe volume is 50 ml, the Auto Fill feature would be very useful with this program.

NanoString Exhibit 1031.033

Periodic Dispense Loop Example

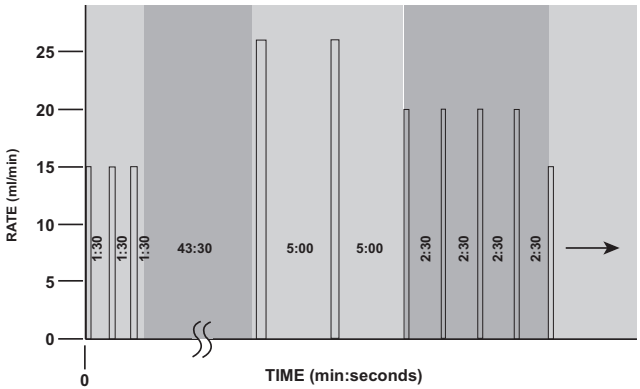

Figure 9. Periodic Dispense Loop

This is an example of a series of periodic dispenses of varying volumes and intervals. For this application, Strategy 2 dispenses are used. Note that between the third and fourth dispenses is a 45 minute interval. Each dispense in the first sequence is separated by a pause interval of 1:30. Since after the third dispense there already will be a 1:30 pause, an additional pause of 43:30 is used to extend the pause to the desired 45:00. Sequence 5 is a RESTART command, causing the series of dispenses to be continuously repeated until the pump is stopped.

PROGRAM PRINTOUT

```
PROG1 SEQ 1:  DISPENSE
15.000 ml/mn
3.5000 ml
0:01:30 INTERVAL
3. REPEAT
INFUSE
PROG1   SEQ 2:  PAUSE
0:43:30 INTERVAL
PROG1 SEQ 3:  DISPENSE
25.700 ml/mn
6.7500 ml
0:05:00 INTERVAL
2.  REPEAT
INFUSE
PROG1   SEQ 4:  DISPENSE
20.000 ml/mn
4.3000 ml
0:02:30 INTERVAL
4.  REPEAT
INFUSE
PROG1 SEQ 5:  RESTART
```


NanoString Exhibit 1031.034

Combination of Infusion and Withdraw Profiles Example

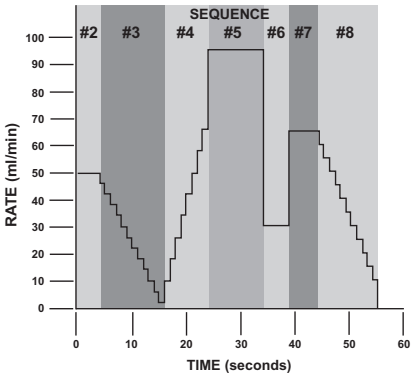

Figure 10. Combination Infusion and Withdraw Profiles

Here is an example of a more complex profile program. Each 'run' of the infusion has been determined to pump 43.155 ml. The first sequence refills the syringe with the volume to be infused then the infusion profile is started, after which the syringe is refilled and the infusion is repeated until the pump is stopped.

PROGRAM PRINTOUT

PROG1 SEQ 1: PROFILE 75.000 ml/mn 43.155 ml REFILL PROG1 SEQ 2: PROFILE 50.000 ml/mn 0:00:04 INTERVAL INFUSE PROG1 SEQ 3: DECR 4.0000 DECR 0:00:01 INTERVAL 12. REPEAT INFUSE PROG1 SEQ 4: INCR 5.0000 DECR 8.0000 INCR 0:00:01 INTERVAL 8. REPEAT INFUSE	PROG1 SEQ 5: PROFILE 95.000 ml/mn 0:00:10 INTERVAL INFUSE PROG1 SEQ 6: PROFILE 30.000 ml/mn 0:00:05 INTERVAL INFUSE PROG1 SEQ 7: PROFILE 65.000 ml/mn 0:00:05 INTERVAL INFUSE PROG1 SEQ 8: DECR 5.0000 DECR 0:00:01 INTERVAL 11. REPEAT INFUSE PROG1 SEQ 9: RESTART

NanoString Exhibit 1031.035

Use of Events

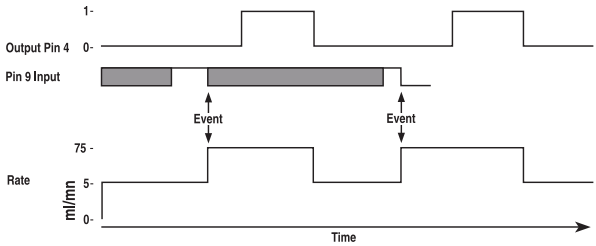

Figure 11. Use of Events

This is an example of the PHD 22/2000 working interactively with other laboratory equipment. The pump will continuously pump at 300 ml/hr until an external event, a high to low transition at pin 9, possibly produced by another PHD 22/2000 , causes the pump to deliver a 15 ml bolus at 75 ml/mn. After delivering 5 ml of the bolus, output pin 4 is set to a logic high for the duration of the bolus after which it is dropped. This output pin can be attached to the timer input of another pump, such as a Harvard Pump 22 or 44, to create a precise mixture during the bolus. After the bolus is completed, the Pump 22 would be stopped and the PHD 22/2000 would return to delivering its background rate of 300 ml/hr, waiting for another external event.

PROGRAM PRINTOUT

PROG1 SEQ 1: TTL OUT OFF PROG1 SEQ 2: EVENT GO TO 4 PROG1 SEQ 3: PUMP 300.00 ml/hr INFUSE PROG1 SEQ 4: PROFILE 75.000 ml/mn	5.0000 ml INFUSE PROG1 SEQ 5: TTL OUT ON PROG1 SEQ 6: PROFILE 75.000 ml/mn 10.0000 ml INFUSE PROG1 SEQ 7: RESTART

NanoString Exhibit 1031.036

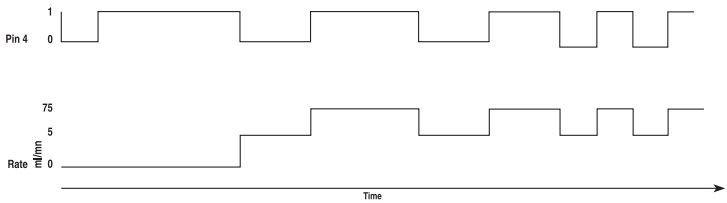

Figure 12. Use of TTL Signal

Before the pumping flow begins, the pump sends a TTL signal to another piece of equipment for 5 seconds, but first verifies that the TTL line is low by turning it off for 1 second, then turns it on. The pumping process consists of an alternation of pumping 3 ml's at 53 ml/mn and 5 ml's at 75 ml/mn. It uses the TTL output to signal to another device whose sequence it is executing by lowering the TTL line before sequence 5 and raising it before sequence 8.

PROGRAM PRINTOUT

PROG1 SEQ 1: TTL OUT OFF	53.000 ml/mn
Prog1 SEQ 2: PAUSE	3.0000 ml
0:00:01 INTERVAL	INFUSE
PROG1SEQ 3: TTL OUT ON	PROG1 SEQ 7: TTL OUT ON
PROG1 SEQ 4: PAUSE	PROG1 SEQ 8: PROFILE
0:00:01 INTERVAL	75.000 ml/mn
PROG1 SEQ 5: TTL OUT OFF	5.0000 ml
PROG1SEQ 6: PROFILE	INFUSE
	PROG1SEQ 9: GO TO 5

This is an example of the PHD 22/2000 being operated from a remote location. When the pump is powered on, the position of the pusher block is unknown and must be homed to a known position.

At the syringe full position, a limit switch is placed such that it is tripped by the pusher block when the syringe is full. The limit switch is connected to pins 4 and 9, programmable output and the event input, on the user I/O connector. When the pump receives a start signal, it first refills the syringe and stops when the limit switch is sensed. The pump then waits for a start trigger and performs a dispense then refills the syringe and waits again for the next start trigger.

PROGRAM PRINTOUT

PROG1 SEQ 1: EVENT GO TO 7	75.000 ml/mn
PROG1 SEQ 2: TTL OUT ON	PROG1 SEQ 7: DISPENSE
PROG1 SEQ 3: PAUSE	10.000 ml/mn
0:00:01 INTERVAL	0.0001 ml
PROG1 SEQ 4: TTL OUT OFF	1. REPEAT REFILL
PROG1 SEQ 5: PAUSE	PROG1 SEQ 8: PUMP
00:00:01 INTERVAL	75.000 ml/mn
PROG1 SEQ 6: PUMP	10.000 ml
	INFUSE
	PROG1 SEQ 9: RESTART

NanoString Exhibit 1031.037

The Pump Chain RS-232 interface is used to enhance the control applications of the PHD 22/2000. This interface allows all control information, including a program, to be entered into the pump from an external source such as a computer. In addition, this interface allows up to 100 pumps and, in certain cases, other RS-232 devices to be controlled from a single RS-232 communication port on a computer.

Assign each pump in the pump chain a unique address from 0 to 99. This address is used to identify which pump is to receive a command and which pump is responding. Configure each pump with its assigned address and the baud rate being used (See Section 10, External Control & Interfaces).

When the control device communicates with the pump, a diamond appears on the far right of the display indicating that it is receiving RS-232 commands. The diamond remains on the display until the pump is turned off or SET RS-232 is entered on the keyboard, indicating a change in the RS-232 configuration.

A pump will not respond to pump chain communication while it is in a setting mode (entered when user presses the SET key). The pump can still be controlled from the keyboard while it is in a pump chain. Control data that is changed via RS-232 will be stored in the pump's nonvolatile memory.

After each command is received and executed, the pump terminates its responses with a prompt. A prompt is a string of ASCII characters sent by a pump.

The PHD 22/2000 is capable of using two sets of pump interface commands. This will allow users of Harvard Apparatus Model 22 and Model 44 pumps to use existing programs to control the PHD 22/2000 pumps. The two sets of commands are contained on the following pages.

NanoString Exhibit 1031.038

Each command sent to the pump chain is a string of ASCII characters, with leading zero's on numbers and all spaces optional. Numbers are a maximum of five digits. The following symbols are used in describing the commands:

Pump Chain Commands - Model 22 Protocol (Model 44 Protocol on page 39)

After each transmission to the Pu*m*p terminating with a CR character (ASCII 13), the pump enters remote mode and responds with the three character sequence:

CR LF prompt

The prompt character indicates the status of the pump as follows:

:	When stopped	(ASCII 58 decimal)
>	When running forward	(ASCII 62 decimal)
<	When running reverse	(ASCII 60 decimal)
*	When stalled	(ASCII 42 decimal)

Note: With a pump chain, if no address precedes the command transmitted, the pump at address 0 will respond to the command.

Commands - Response: CR LF prompt

RUN	Infuse (forward direction)
REV	Start (reverse direction) Not accessible on Infusion model
STP	Stop
CLV	Clear volume accumulator to zero
CLT	Clear target volume to zero
MLM number	Set rate, units are milliliters per minute
ULM number	Set rate, units are microliters per minute
MLH number	Set rate, units are milliliters per hour
ULH number	Set rate, units are microliters per hour
MMD number	Set diameter, units are mm. Rate is set to 0
MLT number	Set target infusion volume, units are ml.
GNG number	Set number of syringes contributing to output (1 to 9)

Numbers between 0 and 1999 will be accepted by the pump. Leading zeros and trailing decimal point are optional. Any number of digits to the right of the decimal point may *b*e transmitted. The number received will be rounded to four significant digits if the leading digit is 1, or three significant digits if the leading digit is 2 to 9.

NanoString Exhibit 1031.039

Queries - Response: CR LF Value CR LF Prompt

Queries with Numeric Response

DIA	Send diameter value, units in mm
RAT	Send rate value in current range units
VOL	Send current accumulated infused volume, units are ml.
TAR	Send target volume, units are ml.
VER	Send model and version number
CNT	Send count (quantity) of syringes contributing to output in gang mode.

Value format: nnnn.nnn

The transmitted value is an 8 character string with leading zeros converted to SP characters. (ASCII 32) The fifth character is a decimal point (ASCII 46).

Query - Response: CR LF Range CR LF Prompt

Queries with String Response

RNG	Send range message

Range is a character string, one of: ML/H ML/M UL/H or UL/M

Error Responses

CR LF ? CR LF prompt	Unrecognized command
CR LF O O R CR LF prompt	Out of range

NanoString Exhibit 1031.040

Pump Chain Commands - Model '44' Protocol

Symbol	Meaning
[. . .]	optional
{. . .}	select one
|	either/or
f	digits 0 – 9 or a decimal point
d	digits 0 – 9
<cr>	carriage return (ASCII 13)
<lf>	line feed (ASCII 10)
<float>	f f f f f f
<integer>	ddddd
<time>	d:dd:dd
<text>	any string of ASCII characters

Command Formats and Meanings:

Command Format	Meaning
<cr>	Stops all pumps. All pumps on the pump chain interpret this as a stop command.
pump address, <cr>	Request for prompt The pump with the indicated address responds with its prompt
optional pump address,	Send a command to a pump.
command, <cr>	The pump with the indicated address executes the command then responds with its prompt. The optional pump address, if not specified, will default to pump address 0.

After each command is received and executed, the pump acknowledges the command with a prompt. Preceding the prompt may be some additional text responses.The additional text will be one or more lines of ASCII text, each preceded by a line feed and terminated by a carriage return:

<lf>, <text>, <cr>

A prompt is a string of ASCII characters sent by a pump indicating the pumps address and its present state:

<lf>, 1 or 2 digit address, prompt character

Prompt Characters	Meaning
:	Pump stopped
>	Pump infusing
<	Pump refilling
/	Pause interval (pump stopped)
*	Pumping interrupted (pump stopped)
^	Dispense trigger wait (pump stopped)

NanoString Exhibit 1031.041

Pump Commands and Responses

RUN Starts pumping according to the present setting of the pump. If pump is already pumping, a 'Not Applicable' response will be given.

STP Stops pump if it was running. If pump was already stopped, a 'Not Applicable' response will be given.

DEL Request for volume delivered, in ml.
Response is of the following format:
space, space, f f f f f f

CLD Request to zero volume delivered. If the pump was interrupted, it will cancel the interrupted condition. If the pump is running, request will not be accepted and a 'Not Applicable' response will be given. Otherwise, no response is given.

RAT [<float> [<units>]]

Request to set or query infusion rate setting.

Set infusion rate:
RAT rate

Set infusion rate and units:
RAT rate units

Rate is of format: f f f f f f

Units are one of:

	Definition
UM	µl/mn
UH	µl/hr
MM	ml/mn
MH	ml/hr

If rate is accepted and valid, rate will become the new infusion rate.
If the rate is invalid, an 'Out Of Range' response will be given.
Command will not be accepted if the pump is running in the Program Mode and
a 'Not Applicable' response will be given.

Query infusion rate: RAT

Response is of the following format:
space, space, f f f f f f units

Where units is one of the following:

ml/mn
ul/mn
ml/hr
ul/hr

NanoString Exhibit 1031.042

RFR [<float> [<units>]]

Request to set or query refill rate setting.

Set refill rate:
RFR rate

Set refill rate and units:
RFR rate units
Rate is of format: f f f f f f
Units are one of:

	Definition
UM	µl/mn
UH	µl/hr
MM	ml/mn
MH	ml/hr

If rate is accepted and valid, rate will become the new refill rate.
If the rate is invalid, an 'Out Of Range' response will be given.
Command will not be accepted if the pump is running in the Program Mode and
a 'Not Applicable' response will be given.

Query refill rate: RFR

Response is of the following format:
space, space, f f f f f f units
Where units is one of the following:
ml/mn
ul/mn
ml/hr
ul/hr

PGR Request for the rate of pumping set during the running of a program.
Response is of the following format:
space, space, f f f f f f units
Where units is one of the following:
ml/mn
ul/mn
ml/hr
ul/hr

NanoString Exhibit 1031.043

DIA [<float>]

Request to set or query syringe diameter setting.

Set diameter:

DIA diameter
Diameter is of format: f f f f f f
Units are MM.

INFUSE and REFILL rates will be set to zero and AUTO FILL will be set to off.

If diameter is accepted and valid, diameter becomes new diameter.
Diameter will not be accepted if the pump is running and a 'Not Applicable' response will be given.
If the diameter is invalid, an 'Out Of Range' response will be given.

Query diameter: DIA

Response is of the following format:
space, space, f f f f f f
Units are MM.

TGT [<float>]

Request to set or query target volume setting.

Set target volume:

TGT volume
Volume is of format: f f f f f f
Units are ML.
If volume is accepted and valid, volume becomes new target volume.
Volume will not be accepted if the pump is running and a 'Not Applicable' response will be given.
If the volume is invalid, an 'Out Of Range' response will be given.

Query volume: TGT

Response is of the following format:
space, space, f f f f f f
Units are ML.

NanoString Exhibit 1031.044

MOD [{PMP|VOL|PGM}]

Request to set or query pumping mode
Set: MOD PMP (Puts pump in Pump Mode)
MOD VOL (Puts pump in Volume Mode)
MOD PGM (Puts pump in Program Mode)

Command will not be accepted if the pump is running and a 'Not Applicable' response will be given.

Query: MOD
If mode is PUMP, response will be:
PUMP
If mode is VOLUME, response will be:
VOLUME
If mode is PROGRAM response will be:
PRGRAM

DIR [{INF|REF|REV}]

Request to set or query pumping direction

Set: DIR INF (sets pumping direction to infusion)
DIR REF (sets pumping direction to refill)
DIR REV (reverses current pumping direction)

Command will not be accepted if the pump is running in volume or program modes and a 'Not Applicable' response will be given.

Query: DIR
If pump direction is infusion, response will be:
INFUSE
If pump direction is refill, response will be:
REFILL

AF [{ON|OFF}]

Request to set or query auto fill setting

Set: AF ON (turns Auto Fill feature on)
Note: The syringe volume is also needed for auto fill to operate. (See SYR command)
AF OFF (turns Auto Fill function off)
Command will not be accepted if the pump is running and a 'Not Applicable' response will be given.

Query: AF
If Auto Fill function is ON, response will be: ON
If Auto Fill function if OFF, response will be: OFF

NanoString Exhibit 1031.045

SYR [<float>]

Request to set or query syringe volume setting for auto fill.
Used in conjunction with Auto Fill feature. (See AF command).

Set syringe volume: SYR volume
Volume is of format: f f f f f f
Units are ML.
If volume is accepted and valid, volume will become the new syringe Auto Fill volume.
Volume will not be accepted if the pump is running and a 'Not Applicable' response will be given.
If the volume is invalid, an 'Out Of Range' response will be given.

Query syringe volume: SYR
Response is of the following format:
space, space, f f f f f f

IN d

Request to read the TTL logic level of the specified pin on the external 9 pin D-SUB connector. Valid pin numbers for input are:
6, 7, 8 and 9
If the pin specified is valid and if the pin level is high, response will be:
ON
If the pin level is low, response will be:
OFF
If the pin specified is invalid:
An 'Out Of Range' response will be given

OUT d = <ON|OFF>

Request to set the TTL logic level at the specified pin on the external 9 pin D-SUB connector.
Valid pin number for output is: 4
If the pin specified is invalid:
An 'Out Of Range' response will be given

Example:
Set pin 4 high:
OUT 4 = ON
Set pin 4 low:
OUT 4 = OFF

NanoString Exhibit 1031.046

SEQ [<integer>] [<entry>]

Request to set or query programming sequences. <integer> is sequence number.
Default is Sequence 1. Command only applicable while pump is stopped. Valid
sequence numbers, 'n', are 1 to 10. 'n' defaults to 1 wherever it is optional. See program
examples.

Query entire program: SEQ

Example response:

```
SEQ 1: DISPENSE
75.000 ml/mn
43.155 ml
0:00:01 INTERVAL
   3 REPEAT
INFUSE
SEQ 2: PROFILE
100.00 ml/mn
150.00 ml
REFILL
SEQ 3: RESTART
```

Query program sequence [n]: SEQ n

Example response to the command 'SEQ 2' with the previous example's program:

```
SEQ 2: PROFILE
100.00 ml/mn
150.00 ml
REFILL
```

Query program sequence n's mode: SEQ [n] MOD

Response will be according to the following table:

Response	Description	Response	Description
STP	stop	RST	restart
PRO	profile	GOT	go to
INC	increment	EVN	event
DEC	decrement	PMP	pump
DIS	dispense	OUT	TTL out
PAS	pause		

NanoString Exhibit 1031.047

Query data item of program sequence n:

Command	Description
SEQ [n] RAT	Query rate Response: f f f f f f units Where units is one of the following: ml/mn ul/mn ml/hr ul/hr
SEQ [n] GOT	Query go to sequence number Response: <n>
SEQ [n] TGT	Query target volume Response: <float>
SEQ [n] INT	Query time interval Response: <time>
SEQ [n] RPT	Query repetition count Response: <float>
SEQ [n] OUT	Query output pin level setting Response: <ON/OFF>
SEQ [n] DIR	Query pumping direction Possible responses: INFUSE REFILL

Set mode of program sequence n:

SEQ [n] MOD mode

Where mode is as follows:

Mode	Description	Mode	Description
STP	stop	RST	restart
PRO	profile	EVN	event
INC	increment	GOT	go to
DEC	decrement	OUT	set output pin
DIS	dispense	PMP	pump
PAS	pause		

Set data item of program sequence n:

Set sequence's rate:

SEQ [<n>] RAT <float> [<units>]

Rate is of format: f f f f f f

Units are one of :	Description
UM	µl/mn
UH	µl/hr
MM	ml/mn
MH	ml/hr

NanoString Exhibit 1031.048

Set sequence's go to sequence number
SEC [<n>] GOT <n>
Set sequence's target volume:
SEQ [<n>] TGT <float>
Set sequence's time or target:
SEQ [<n>] INT <time>
Set sequence's repetition number:
SEQ [<n>] RPT <integer>
Set sequence's pumping direction:
SEQ [<n>] DIR <INF|REF>
Set sequence's output pin level
SEQ [<n>] OUT <ON|OFF>

VER Request for version of pumps embedded software.

Pump Chain Error Messages

Error messages are in the format:
<lf>, space, space, <message>, <cr>,

Where <message> is one of the following:

?	Syntax error in a received command
NA	Command not applicable at this time
OOR	Control data is out of the operating range of the pump

Note: If assistance is needed in programming pump control via RS-232, call Harvard Apparatus Customer Service Support at 1-800-272-2775.

Outside U.S. call 1-508-893-8999.

NanoString Exhibit 1031.049

Appendix A: Syringe Diameters in mm

Stainless Steel

Size	Diameter
2.5 cc	4.851 mm
20	19.130
50	28.600
100	34.900
200	44.755

Becton Dickinson Plastic 'Plasti-pak'

Size	Diameter
1 cc	4.78 mm
3	8.66
5	12.06
10	14.50
20	19.13
30	21.70
50/60	26.70

Air–Tite 'All Plastic'

Size	Diameter
2.5 cc	9.60 mm
5	12.45
10	15.90
20	20.05
30	22.50
50	29.00

Unimetrics Series 4000 & 5000

Size	Diameter
10 µl	0.460 mm
25	0.729
50	1.031
100	1.460
250	2.300
500	3.260
1000	4.610

Terumo

Size	Diameter
3 cc	8.95 mm
5	13.00
10	15.80
20	20.15
30	23.10
60	29.10

Sherwood–Monoject Plastic

Size	Diameter
1 cc	4.65 mm
3	8.94
6	12.70
12	15.90
20	20.40
35	23.80
60	26.60
140	38.40

Cadence Science, Inc.
Formly Popper & Sons, Inc.
'Perfektum' Glass

Size	Diameter
0.25 cc	3.45 mm
0.5	3.45
1	4.50
2	8.92
3	8.99
5	11.70
10	14.70
20	19.58
30	22.70
50	29.00
100	35.70

Renfac

Size	Diameter
2 cc	9.12 mm
5	12.34
10	14.55
20	19.86
30	23.20
50	27.60

SGE Scientific Glass Engineering

Size	Diameter
25 µl	0.73 mm
50	1.03
100	1.46
250	2.30
500	3.26
1.0 ml	4.61 mm
2.5	7.28
5	10.30
10	14.57

Hamilton–Microliter Series Gastight

Size	Diameter
0.5 µl	0.103 mm
1	0.1457
2	0.206
5	0.3257
10	0.460
25	0.729
50	1.031
100	1.46
250	2.3
500	3.26
1.0 ml	4.61 mm
2.5	7.28
5	10.3
10	14.57
25	23.0
50	32.6

Becton Dickinson Glass-All Types

Size	Diameter
0.5 µl	4.64 mm
1	4.64
2.5	8.66
5	11.86
10	14.34
20	19.13
30	22.70
50	28.60
100	34.90

NanoString Exhibit 1031.050

Harvard High Pressure Stainless Steel Syringes

Cat No	Product
Replacement Parts	
MA1-5013-089	Chemraz® O-Ring 20 ml
MA1-5013-090	Chemraz® O-Ring 50 ml
MA1-5013-091	Chemraz® O-Ring 100 ml
MA1-5013-092	Chemraz® O-Ring 200 ml
MA1-5013-109	Chemraz® Tip Seal O-Ring, sizes 20-200 ml
MA1-72-2472	Replacement Viton O-Ring 20 ml, pkg. of 10
MA1-72-2473	Replacement Viton O-Ring 50 ml, pkg. of 10
MA1-72-2474	Replacement Viton O-Ring 100 ml, pkg. of 10
MA1-72-2475	Replacement Viton O-Ring 200 ml, pkg. of 10
MA1-72-2616	Replacement Viton Tip Seal O-Ring, sizes 20-200 ml, pkg. of 20
MA1-72-2617	Stainless Steel Plunger Button to Adapt Syringe for Use with PHD 22/2000 HVP with Triple S Clamp (Required for 50 ml and 100 ml syringes only)

Harvard High Pressure Stainless Steel Syringes

Harvard now offers a completely new line of Stainless Steel Syringes intended for high pressure applications with good resistance to most aggressive liquids. Wetted parts are #316 stainless steel or Viton. Syringes are available in 20, 50, 100 and 200 ml sizes with removable replaceable tips. Syringe to tube fittings are available in 1/16, 1/8 and 1/4 inch sizes. A luer lock end fitting is also available. All tips are interchangeable with all syringes (20 to 200 ml) in the series.

Both syringe barrel end plungers are #316 stainless steel. A Viton O-ring seal between top and end of the barrel insures against leakage. Syringes are guaranteed to be leak free for pressures up to 700 psi.

All syringes are supplied with inside diameter dimensions for use with Harvard microprocessor controlled pumps and rate charts for use with older 'classic' pumps. Replacement Viton O-Rings are available, as are the more chemically resistant Chemraz® O-Rings.

Harvard High Pressure Stainless Steel Syringes

	Fitting for Tube Diameter			Luer Lock
Syringe Size	**1/16 inch**	**1/8 inch**	**1/4 inch**	
20 ml	**MA1-70-2251**	**MA1-70-2252**	**MA1-70-2253**	**MA1-70-2254**
50 ml	**MA1-70-2255**	**MA1-70-2256**	**MA1-70-2257**	**MA1-70-2258**
100 ml	**MA1-70-2259**	**MA1-70-2260**	**MA1-70-2261**	**MA1-70-2262**
200 ml	**MA1-70-2263**	**MA1-70-2264**	**MA1-70-2265**	**MA1-70-2266**
Replacement Tips, Furnished with Sealing O-Ring				
	MA1-70-2247	**MA1-70-2248**	**MA1-70-2249**	**MA1-70-2250**

NanoString Exhibit 1031.051

Harvard High Pressure Small Volume Stainless Steel Syringes

Both syringes and the fittings are constructed of #316 stainless steel. The 8 ml syringe uses a pair of perfluoroelastomer o-rings with Teflon back-up rings. When used with Harvard PHD 4400 high pressure pump, working pressures of 1500 psi can be achieved (great for chromatography and process control applications). The 2.5 ml syringe utilizes a Bal Seal with a PEEK back-up ring. When used with a 4400 pump, working pressures of 7000 psi can be achieved.

Specifications	
Volume	2.5 ml
Dimensions:	
Length of Barrel	16.9 cm (6.64 in)
Plunger Excursion	13.4 cm (5.28 in)
OD	1.3 cm (.50 in)
ID	0.49 cm (.191 in)
Max Test Pressure	9000 psi
Working Pressure	7000 psi

Cat No	Product
MA1-70-2267	8 ml Stainless Steel Syringe with 1/16 inch tube fitting
MA1-70-2268	8 ml Stainless Steel Syringe with 1/8 inch tube fitting
MA1-70-2269	2.5 ml Stainless Steel Syringe with 1/16 inch tube fitting
MA1-70-2246	1/16" Replacement Tip with O-Ring for 8 ml or 2.5 ml Syringe
MA1-70-2245	1/8" Replacement Tip with O-Ring for 8 ml Syringe
MA1-5013-087	Replacement Syringe O-Ring, Chemraz® 8 ml Syringe
MA1-5013-088	Replacement Syringe Back-Up O-Ring, Teflon 8 ml Syringe
MA1-5013-110	Replacement Tip O-Ring, Chemraz®
MA1-70-2271	Repalcement Bal Seal® for 2.5 ml Syringe

NanoString Exhibit 1031.052

Minimum flow rates are taken from the smallest inside diameters and maximum flow rates are taken from the largest inside diameters of the syringes supplied by the eleven most widely used syringe manufacturers.

Nominal Minimum/Maximum Flow Rates for Various Syringes (Actual Limits will vary depending on manufacturer)

Syringe Size	µl/hr Min.	µl/hr Max.	µl/min Min.	µl/min Max.	ml/hr Min.	ml/hr Max.	ml/min Min.	ml/min Max.
0.5 µl	0.0001	95.330						
1 µl	0.0002	190.70						
2 µl	0.0004	381.30						
5 µl	0.0010	953.17						
10 µl	0.0019					1.9013		
25 µl	0.0046					4.7752		
50 µl	0.0092					9.5511		
100 µl	0.0183					19.153		
250 µl	0.0454					47.532		
500 µl	0.0911					95.492		
1000 µl			0.0031			190.95		
1 ml			0.0033			205.30		
2 ml			0.0119			747.35		
2.5 ml			0.0076			476.21		
3 ml			0.0100					11.231
5 ml			0.0208					21.781
10 ml			0.0301					31.486
20 ml			0.0523					54.804
30 ml			0.0673					70.518
50 ml			0.1019					106.76
100			0.1740					182.40
140 ml			0.2106					220.82

Stainless Steel Syringes

Only Harvard's stainless steel syringes can be used with this pump. They can withstand high pressure applications and provide years of service.

Flow Rates for PHD 22/2000 HVP (High Volume and Pressure)

Rates listed are for single syringe

Syringe Size	Minimum	Maximum
20 ml	1.5 µl/hr	20 ml/min
50 ml	3.4 µl/hr	46 ml/min
100 ml	5.0 µl/hr	68 ml/min
200 ml	8.2 µl/hr	112 ml/min

NanoString Exhibit 1031.053

Appendix D: Custom Applications

The Harvard PHD 22/2000 Syringe Pumps lend themselves to a multitude of OEM industrial applications. For all types of custom pumping or pilot plant applications, the pump's programming capabilities can be enhanced. Please contact the Harvard Development Group if we can be of help.

Appendix E: PHD 22/2000 to PC Connections

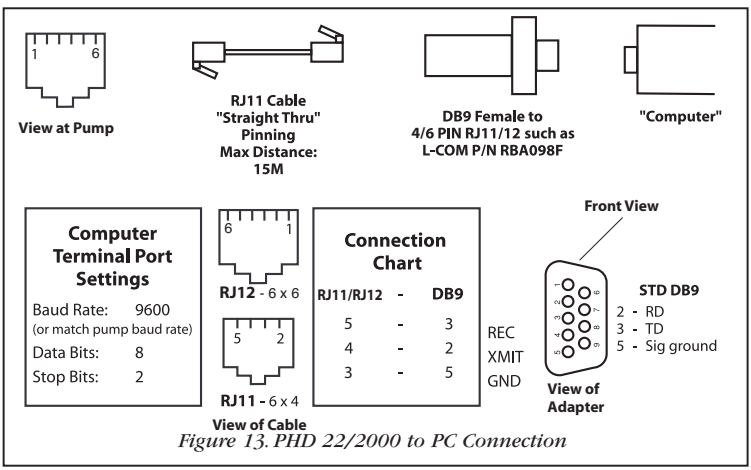

Figure 13. PHD 22/2000 to PC Connection

NanoString Exhibit 1031.054

Pump Chain

Pump Port 1 – Computer control side
Pump Port 2 – Connection for remainder of pump chain
Baud Rate – 1200, 2400, 9600 or 19,200
Word Size – 8
Parity – none
Stop Bits – 2

Scale

Connect scale to Pump Port 1

Supported scales:

Mettler
Baud Rate – 2400
Word Size – 7
Parity – even
Stop Bits – 1
Pause – 0

Sartorius
Baud Rate – 2400
Word Size – 7
Parity – even
Stop Bits – 1
Code Settings:
311 – Weigh only (models with PLUS performance package)
211 – External print command without stability
225 – 2400 baud
234 – Even Parity
432 – Beeper off

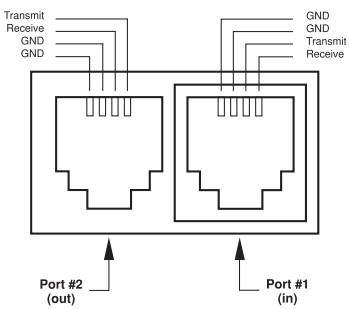

Figure 14. RS-232 Specifications

Ohaus
Baud Rate – 2400
Word Size – 8
Parity – even
Stop Bits – 1
Auto print feature – off
Stable data only – off
Serial data frame selection – Fr.7

Printer

Serial printer with print buffer:
Baud Rate – 2400
Word Size – 8
Parity – none
Stop Bits – 2

Appendix G: Symphony

Symphony, the Windows® Pump Manager software, allows you to control your PHD 22/2000 pump from your remote computer. With Symphony, you can orchestrate all pump functions from a virtual control panel via the serial communications link built into every PHD 22/2000 pump.

NanoString Exhibit 1031.055

User I/O (input/output) connections are via a 9 pin D-sub type connector. All inputs are internally pulled up to a logic high.

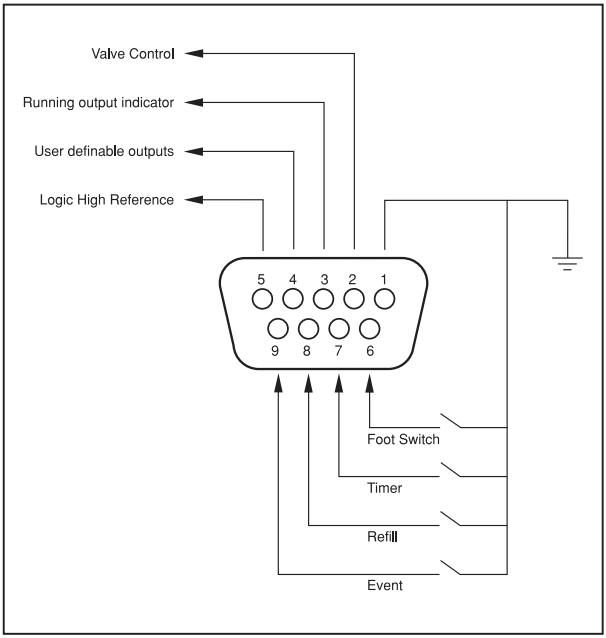

Figure 15. User I/O Connector Specifications

Pin Assignments

1. Vss (Ground reference, logic low)
   Falling edge starts/stops pump
2. Valve control output:
   Low – Infusing
   High – Refilling
3. Running Output Indicator
   Low - Pumped stopped
   High - Pump running
4. Programmable output
5. Logic High Reference (5V, 6 mA)
6. Foot switch input
7. Timer Input
   Rising edge starts pump
   Falling edge stops pump
8. Directional control input
   Rising edge sets pump to infuse
   Falling edge sets pump to refill
9. Event input
   Falling edge triggers program event

Logic Low: 0 V – 0.8 V
Max. 6 mA current sink

Logic High: 2 V – 5 V
Max. 6mA current source

NanoString Exhibit 1031.056

Maintenance

PHD 22/2000 series pumps require no special maintenance other than keeping them clean by avoiding accidental spills of pumped material.

The two guide rods and the lead screw should be sparingly lubricated periodically.The guide rods and the lead screw should be lubricated with Magnalube-G R grease (Catalog #MA1-0606-086) provided with the pump.

Solvents of any type should never be used to clean the pump. A mild detergent solution may be used to clean the keypad.

Troubleshooting

Infusion Accuracy
To ensure infusion accuracy always use new syringe(s) and measure syringe bore diameter and enter actual dimensions in millimeters (mm). Additionally make sure that the guide rods and lead screw are properly lubricated.

RS-232 Difficulties
Verify that the baud rates and data framing parameters on all devices are the same. With the pump chain, a "Communication timeout" error on a computer is usually caused by the computer errantly handshaking on the RTS, CTS and DSR lines. Verify pins 4, 5 and 6, on the 25 pin connector, are jumped on the computer side of the cable.

PHD 22/2000 Display Messages

Pump Stalled
This indicates that the pusher block travel has been impeded. This may be caused by the syringe plunger hitting bottom, a kink in the tubing, syringe plunger binding or any situation requiring more force to the head of the syringe than the pump is capable of delivering. To restart the pump, remove the cause of stalling and press RUN. The pump will continue the interrupted procedure where it stopped. Also note, a large increase in the pumping rate could also stall the motor.

Out of Range
A value was entered or encountered in a pump program that was beyond the pump's limits. Also, verify that the Infuse Rate is not 0. Note that rates must be less than 42949. Express larger rates using different units.

EEPROM Data Lost
The values stored in the nonvolatile memory have been lost. This should never occur under normal operation.

Replace NOVRAM
The nonvolatile memory has failed. This should never occur under normal operation.

NanoString Exhibit 1031.057

There are two 'Auto Fill' Valve models available:

Catalog No.	Product
MA1-55-7002	Supplied with 1/8 inch ID, 1/4 inch OD silastic tubing and connector to syringe
MA1-55-7004	High Pressure: Supplied with 1/4 inch OD 304 stainless steel tubing with Swagelok fittings

Setting Up the Valve

1. Power Connection
Connect the line cord to the power supply (included). Attach the power supply to the input jack on the value box.

2. Pump to Valve Electrical Connection
The cable fitted with a male 9 pin D-sub connector must be connected to the female D-sub connector on the rear of the PHD 22/2000 Syringe Pump. Power can now be switched on with the illuminated power On/Off switch on the front valve housing.

3. Pump to Valve Tubing Connection

Swagelok fitting should be finger tight plus 1 1/4 turn.Tubing is 304 stainless steel 1/4 inch O.D. wall thickness 0.035 inch.

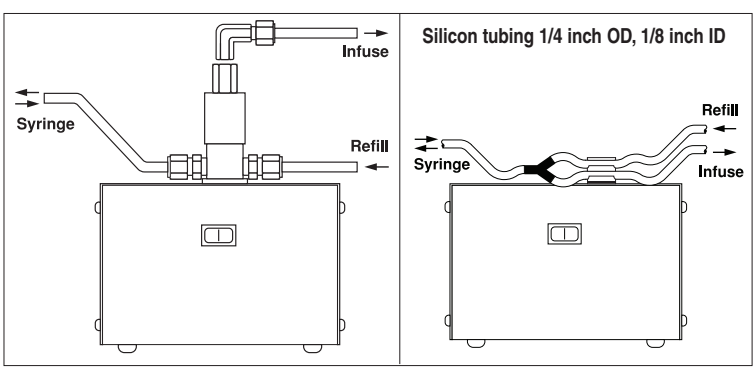

Figure 16. Pump to Valve Tubing Connection

NanoString Exhibit 1031.058

Harvard PHD 22/2000 Syringe Pump Series				
	Standard (50 lbs Force)		High Power (66 lbs Force)	
Pump Versions	Regular	Remote	Regular	Remote
PHD 22/2000 Infusion Only	MA1-70-2000	MA1-70-2100	MA1-71-2000	MA1-71-2100
PHD 22/2000 Infuse/Withdraw	MA1-70-2001	MA1-70-2101	MA1-71-2001	MA1-71-2101
PHD 22/2000 Programmable Infuse/Withdraw	MA1-70-2002	MA1-70-2102	MA1-71-2002	MA1-71-2102
PHD 22/2000 Infusion Only with 6/10 Multirack	MA1-70-2003	MA1-70-2103	MA1-71-2003	MA1-71-2103
PHD 22/2000 Infusion Only with 4 x 140 Multirack	MA1-70-2004	MA1-70-2104	MA1-71-2004	MA1-71-2104
PHD 22/2000 Infusion Only with Microliter Rack	MA1-70-2005	MA1-70-2105	MA1-71-2005	MA1-71-2105
PHD 22/2000 Infuse/Withdraw with 6/10 Multirack	MA1-70-2006	MA1-70-2106	MA1-71-2006	MA1-71-2106
PHD 22/2000 Infuse/Withdraw w/ 4 x 140 Multirack	MA1-70-2007	MA1-70-2107	MA1-71-2007	MA1-71-2107
PHD 22/2000 Infuse/Withdraw with Microliter Rack	MA1-70-2008	MA1-70-2108	MA1-71-2008	MA1-71-2108
PHD 22/2000 Programmable with 6/10 Multirack	MA1-70-2009	MA1-70-2109	MA1-71-2009	MA1-71-2109
PHD 22/2000 Programmable with 4 x 140 Multirack	MA1-70-2010	MA1-70-2110	MA1-71-2010	MA1-71-2110
PHD 22/2000 Programmable with Microliter Rack	MA1-70-2011	MA1-70-2111	MA1-71-2011	MA1-71-2111

Harvard PHD 22/2000 Push/Pull Syringe Pump Series	
	Standard (50 lbs Force)
Pump Versions	Regular
PHD 22/2000 Infusion/Withdraw	MA1-70-2020
PHD 22/2000 Programmable Infuse/Withdraw	MA1-70-2019

Harvard PHD 22/2000 HVP (High Volume and Pressure)	
	Standard (over 400 lbs Force)
Pump Versions	Regular
PHD 22/2000 HVP (High Volume and Pressure)	MA1-70-2023

NanoString Exhibit 1031.059

Auto Fill Accessory

To operate the Auto Fill feature, either the low pressure or high pressure valve assembly is required. Each assembly contains the solenoid valve, connector cable, power cable, and tubing and fittings to connect to the syringe. Operates at 115/230 VAC, 50/60 Hz via a selector switch.

Catalog No.	Description
Accessories	
MA1-55-7760	Daisy-Chain Cable
MA1-70-2022	PHD 22/2000 RS-232 Adapter, 9-pin to standard phone jack*
MA1-72-8340	USB to Serial Connector
MA1-55-4144	Foot Switch
MA1-55-7002	'Auto Fill' Valve Box–Regular Pressure – to 20 psi
MA1-55-7004	'Auto Fill' Valve Box–High Pressure – 200 psi
MA1-61-0270	Continuous Flow Tube Segment**
MA1-72-0199	Remote Extension Cable, 1.5 m (5 ft)*
MA1-72-1405	Remote Ext. Cable, 9.1 m (30 ft)*
MA1-70-2263	SS Syringe, 200 ml, with 1/16 inch Swagelok®*
MA1-70-2264	SS Syringe, 200 ml, with 1/8 inch SWAGELOK®*
MA1-70-2265	SS Syringe, 200 ml, with 1/4 inch SWAGELOK®*
MA1-70-2266	SS Syringe, 200 ml, with Luer Lock*

** For PHD 22/2000 HVP Remote Syringe Pump*
*** For PHD 22/2000 Push/Pull Syringe Pump*

Spare Parts	
MA1-0606-086	Magnalube Lead Screw Lubricant
MA1-2400-243	Syringe Clamp
MA1-5012-005	3/32 Hex Key
MA1-5091-030	Syringe Retainer Knob
MA1-5100-055	T Knob - Withdraw and Anti-Siphon Bracket
MA1-5153-209	Power Cord
MA1-5400-008	PHD 22/2000 Operators Manual

NanoString Exhibit 1031.060

Appendix M: Kits and Upgrades

Catalog No.	Description
Kits	
MA1-70-2012	PHD 22/2000 6/10 Multirack Upgrade Kit
MA1-70-2013	PHD 22/2000 4 x 140ml Multirack Upgrade Kit
MA1-70-2014	PHD 22/2000 Microliter Rack Upgrade Kit
MA1-70-2015	PHD 22/2000 Anti-Siphon Kit (for Infusion Pump)
Upgrades	
MA1-70-2016	PHD 22/2000 Infusion to Infuse/Withdraw*
MA1-70-2017	PHD 22/2000 Infuse/Withdraw to Programmable*
MA1-70-2018	PHD 22/2000 Infusion to Programmable*

**Factory Installed Only*

NanoString Exhibit 1031.061

Declaration of Conformity

Application of Council Directive(s):	*73/23/EEC, 89/336/EEC*
Standard(s) to which conformity is declared:	*EN61010, EN50082-1, EN50081-1*
Manufacturer's Name:	*Harvard Apparatus, Inc.*
Manufacturer's Address:	*84 October Hill Road* *Holliston, Massachusetts 01746* *U.S.A.*
Type of Equipment:	*Syringe Pump*
Model No.:	*PHD 2000 Series*

I, the undersigned, hereby declare that the equipment specified above conforms to the above Directive(s) and Standard(s).

Place:	*United States of America*
Date:	*November 11, 1996*

CE

HARVARD
APPARATUS

Beth Bauman
(Signature)

Beth Bauman
(Full Name)

VP Engineering / Operations
(Position)

NanoString Exhibit 1031.062