Trials@uspto.gov
Tel: 571-272-7822

Paper 33
Date: September 8, 2025

UNITED STATES PATENT AND TRADEMARK OFFICE

BEFORE THE PATENT TRIAL AND APPEAL BOARD

META PLATFORMS, INC.,
Petitioner,

v.

SITNET LLC,
Patent Owner.

IPR2024-00529
Patent 8,332,454 B1

Before NEIL T. POWELL, KARA L. SZPONDOWSKI, and STEPHEN E. BELISLE, *Administrative Patent Judges.*

POWELL, *Administrative Patent Judge*.

JUDGMENT
Final Written Decision
Determining All Challenged Claims Unpatentable
35 U.S.C. § 318(a)

Granting Request for Adverse Judgment
After Institution of Trial
37 C.F.R. § 42.73(b)

I. INTRODUCTION

A. BACKGROUND

Meta Platforms, Inc. ("Petitioner") filed a Petition for *inter partes* review of claims 1–20 of U.S. Patent No. 8,332,454 B1 (Ex. 1001, "the '454 patent"). Paper 1 ("Pet."). SitNet LLC ("Patent Owner") filed a Preliminary Response. Paper 6 ("Prelim. Resp."). With our authorization, Petitioner filed a Preliminary Reply (Paper 7, "Prelim. Reply"), and Patent Owner filed a Preliminary Sur-reply (Paper 8, "Prelim. Sur-reply").

We instituted an *inter partes* review. Paper 9 ("Inst. Dec."). During trial, Patent Owner filed a Response to the Petition (Paper 14, "PO Resp."), Petitioner filed a Reply (Paper 17, "Reply"), and Patent Owner filed a Sur-reply (Paper 23, "Sur-reply").

We held an oral hearing in this proceeding on June 11, 2025 and a copy of the transcript is entered into the record.[1] Paper 25 ("Tr.").

Additionally, Patent Owner filed a Request for Adverse Judgment seeking cancellation of claims 10–19. Paper 22 ("Request" or "Req."). As discussed below, we grant Patent Owner's Request. Accordingly, we need not reach Petitioner's challenges to claims 10–19.

We have jurisdiction under 35 U.S.C. § 6 (2018). This Decision is a Final Written Decision under 35 U.S.C. § 318(a) as to the patentability of the claims on which we instituted trial. Petitioner has the burden of proving unpatentability of a claim by a preponderance of the evidence. 35 U.S.C. § 316(e).

[1] The hearing was a combined oral hearing with IPR2024-00612.

Based on the complete record, Petitioner has shown, by a preponderance of the evidence, that claims 1–9 and 20 of the ’454 patent are unpatentable.

B. RELATED PROCEEDINGS

The parties identify *SitNet, LLC v. Meta Platforms, Inc.*, No. 1.23-CV-06389 (S.D.NY. July 24, 2023) as a related case (“district court litigation”). Pet. 2; Paper 4, 2. Petitioner also notes that the district court litigation involves, in addition to the ’454 patent, other related U.S. patents. Pet. 3. Petitioner further notes that it is seeking *inter partes* review of those related patents in IPR2024-00528, IPR2024-00530, IPR2024-00531, and IPR2024-00612. *Id.*

C. THE ’454 PATENT

The ’454 patent is titled “Creating a Projection of a Situational Network” and is generally directed to “[a] method of creating a projection of a situational network.” Ex. 1001, codes (54), (57). The method involves “creating, by an event node server, an event node in a multi-dimensional personal information network.” *Id.* at code (57).

The ’454 patent describes that a situational network “is created when an occurrence or expected occurrence of an event or situation . . . causes connections, also referred to as links, to be established between, within or among a set of participants.” Ex. 1001, 3:60–64. “The situational network allows the participants . . . to interact and exchange information over connections to or through a computer network . . . regarding the event or situation.” *Id.* at 3:64–67. Participants in the situational network may include external entities (e.g., weather agencies or traffic agencies) and users (i.e., individuals or members). *Id.* at 4:6–4:22. Users are connected to the

situational network using devices, such as cell phones or personal computers, and the devices may be connected automatically, by requesting a connection, or by receiving an invitation to connect. *Id.* at 4:25–36, 20:8–16. Users are connected into the situational network when it is determined that they are affected by the event or situation. *Id.* at 5:27–29. Examples of events or situations that can initiate the formation of a situational network include weather phenomenon, emergency situations, natural disasters, weather related activities, navigation and/or travel incidents, public health crises, and social events. *Id.* at 4:48–62, 30:62–63. For example, a situational network "may be formed when users involved in a situation or event are determined to be in relatively close geographic positions." *Id.* at 5:46–48. As another example, a situational network for an emergency event "may have multiple tiers or access levels to allow for more effective sharing and propagation of information between users." *Id.* at 25:18–21.

The '454 patent describes an embodiment where the situational network may be established using the framework of a multi-dimensional personal information network (also referred to as an N-dimensional social network (NDSN)). Ex. 1001, 7:37–40. The NDSN "captures and manages multi-dimensional relationships between persons and other entities that are users of the network" and "permits the user to discover and utilize the indirect relationships to other users that are connected to him through first-degree users." *Id.* at 14:28–48. "In this embodiment, users are connected into the situational network through the NDSN using a PIA [Personal Information Aggregator]." *Id.* at 7:41–42. The PIA associated with each user is or encompasses a node of the situational network, and the event or

situation itself may also be associated with a node on the situational network, known as an event node. *Id.* at 7:43–44. The PIA "provides a user with the ability to store, organize and control personal information" and may be implemented on a handheld device, such as a mobile phone, a personal computer, or a dedicated appliance. *Id.* at 7:43–44, 7:65–67, 13:9–44. The stored information may reside in data structures that are implemented as tables in a relational database management system that can be accessed by the PIA's application program. *Id.* at 9:30–33. In this embodiment, the NDSN can "provide a 'projected' view of a subset of the members of the NDSN to the user based on a subset of the NDSN's multiple dimensions." *Id.* at 14:53–55; *see also id.* at 16:26–28, 29:44–58.

As discussed above, in this embodiment the event or situation becomes associated with a node of the NDSN, referred to as an event node. Ex. 1001, 19:54–56. A user may be automatically connected to the event node, request connection to the event node, or be invited to connect to the event node corresponding to the event. *Id.* at 19:56–57. The invitation may be based on a stored user profile accessible to a situation authority server associated with the event node that crawls the network for user PIAs "that would likely be interested in the information about the event." *Id.* at 20:10–14. The user may accept or decline the invitation. *Id.* at 20:15–16.

In another embodiment, "[a] situational network can be used to efficiently deliver and propagate a message or notification from a single user related to a situation or event to an expanded group of individuals who are directly or indirectly affected by the event or situation." Ex. 1001,

29:59–63. The messages or notifications can be propagated to selected groups of users. *Id.* at 29:53–30:16, 30:39–61.

D. ILLUSTRATIVE CLAIM

Of the challenged claims, claims 1, 10, and 20 are independent. Each of claims 2–9 and 11–19 depends, directly or indirectly, from one of independent claims 1 and 10. Claim 1 is illustrative and is reproduced below with certain reformatting:[2]

> 1. [1.P] A method of creating a projection of a situational network, the method comprising:
>
> [1.1] (a) creating, by an event node server, an event node in a multi-dimensional personal information network, the event node corresponding to a situation;
>
> [1.2] (b) forming a projection of nodes of the situational network using geographic locations of a plurality of devices corresponding to nodes in the multi-dimensional personal information network;
>
> [1.3] (c) transmitting an invitation to establish a link with the event node server to the devices corresponding to each node in the projection formed in step (b);
>
> [1.4] (d) receiving a response from at least one of the devices from step (c) accepting the invitation to establish a link with the event node server; and
>
> [1.5] (e) establishing a link with each device accepting the invitation.

Ex. 1001, 33:19–35.

[2] We have added the same labels that Petitioner uses to identify portions of claim 1. *See* Pet. 24–25.

E. Asserted Grounds of Unpatentability

Petitioner challenges the patentability of claims 1–9 and 20 of the ’454 patent on the following grounds (Pet. 5):

Claims Challenged	35 U.S.C. §[3]	Reference(s)/Basis
1–7, 10–17, 19, 20 1–7, 20	103(a)	Amidon[4]
1–4, 6, 8–18, 20 1–4, 6, 8, 9, 20	103(a)	Wong[5], Gogic[6]

In support of its challenges, Petitioner also relies on the Declaration of Jeremy R. Cooperstock, Ph.D. Ex. 1003. In response, Patent Owner relies on the Declaration of Dr. Aviel D. Rubin. Ex. 2009. A deposition transcript has been entered into the record for Dr. Rubin. Ex. 1020.

II. ANALYSIS

A. Level of Ordinary Skill

Petitioner contends a person of ordinary skill in the art “would have had a bachelor’s degree in Computer or Electrical Engineering or equivalent discipline, and approximately two years’ experience in telecommunications or computer networking,” adding that “[a]dditional education could substitute for professional experience, and significant work experience could substitute for formal education.” Pet. 9 (citing Ex. 1003 ¶¶ 45–46).

---

[3] The Leahy-Smith America Invents Act (“AIA”), Pub. L. No. 112-29, 125 Stat. 284, 287–88 (2011), revised 35 U.S.C. § 103, effective March 16, 2013. Because the application for the ’454 patent was filed before this date, the pre-AIA version of § 103 applies. *See* Ex. 1001, code (22).

[4] U.S. Patent No. 8,346,864 B1, issued Jan. 1, 2013 (Ex. 1005, “Amidon”).

[5] U.S. Patent Application Publication No. 2008/0103784 A1, published May 1, 2008 (Ex. 1006, “Wong”).

[6] U.S. Patent No. 8,103,300 B2, issued Jan. 24, 2012 (Ex. 1007, “Gogic”).

Patent Owner does not challenge Petitioner's definition. *See generally* PO Resp.

In our Institution Decision, we adopted Petitioner's proposed definition, finding it to be reasonable and commensurate with the problems and solutions disclosed in the prior art. Inst. Dec. 7–9. We continue to do so here.

B. CLAIM CONSTRUCTION

A claim "shall be construed using the same claim construction standard that would be used to construe the claim in a civil action under 35 U.S.C. § 282(b)." 37 C.F.R. § 42.100(b) (2024). "In determining the meaning of the disputed claim limitation, we look principally to the intrinsic evidence of record, examining the claim language itself, the written description, and the prosecution history, if in evidence." *DePuy Spine, Inc. v. Medtronic Sofamor Danek, Inc.*, 469 F.3d 1005, 1014 (Fed. Cir. 2006) (citing *Phillips v. AWH Corp.*, 415 F.3d 1303, 1312–1317 (Fed. Cir. 2005) (en banc)). "[T]he claims themselves provide substantial guidance as to the meaning of particular claim terms," but "do not stand alone." *Phillips*, 415 F.3d at 1314–1315. They are part of "'a fully integrated written instrument,' consisting principally of a specification that concludes with the claims," and must therefore "be read in view of the specification." *Id.* at 1315 (quoting *Markman v. Westview Instruments, Inc.*, 52 F.3d 967, 978–79 (Fed. Cir. 1995)). There is a "heavy presumption," however, that a claim term carries its ordinary and customary meaning. *CCS Fitness, Inc. v. Brunswick Corp.*, 288 F.3d 1359, 1366 (Fed. Cir. 2002) (citation omitted). "[T]he ordinary and customary meaning of a claim term is the meaning that

the term would have to a person of ordinary skill in the art in question at the time of the invention." *Phillips*, 415 F.3d at 1313.

Petitioner "submits that no claim terms require construction and all claim terms should receive their plain and ordinary meaning in the context of the '454 patent." Pet. 10. Patent Owner requests that we "adopt the District Court's construction of all terms in *Sitnet v. Meta*, as detailed in Ex. 2007."[7] PO Resp. 3. Additionally, although the District Court determined that "event node" did not need to be construed, Patent Owner argues that the Specification of the '454 patent provides a definition for "event node." *Id.* (citing Ex. 2007, 6).[8] Specifically, Patent Owner argues that "an event node is defined in the specification as a type of node that communicates, or propagates, up-to-date information in a NDSN [N-dimensional social network]." *Id.* at 5 (citing and referring to Ex. 1001, 7:42–51); *see also id.* at 3–5 (citing and referring to Ex. 1001, 14:28–31, 15:1–4); *see also* Sur-reply at 2–4. Patent Owner argues that "an event node per claims 1 and 20 is a node within an NDSN providing up-to-date information regarding an event or situation via peer-to-peer communication with other nodes." PO Resp. 6.

---

[7] Exhibit 2007 is the claim construction order from the related litigation.

[8] We note that in the related litigation, Patent Owner proposed that an "event node" is "a node on a personal information network corresponding to an event or situation." Ex. 2007, 5. This is consistent with the Specification, which states that "[t]he situation or event itself may also be associated with a node on the SitNet, known as the event node for the SitNet." Ex. 1001, 7:44–46; *see also* 19:5256 ("an embodiment of a situational network may be formed using the framework of an NDSN. Within the framework of the NDSN, the event or situation becomes associated with a node of the NDSN, referred to as an event node"). This is also consistent with Dr. Rubin's testimony that an "event node" "is a node in an N-dimensional social network (NDSN) that corresponds to an event." Ex. 2009 ¶ 68.

In Reply, Petitioner argues that that Patent Owner's proposed construction improperly "attempts to narrow the scope of the term 'event node'" by reading limitations from the specification into the claim. Reply 2. In Sur-reply, Patent Owner argues that it has construed "event node" in the context of claims 1 and 20, where it appears. Sur-reply 2–5.

In the related litigation, the District Court rejected both parties' proposed constructions, and determined that "event node" does not need construction. Ex. 2007, 5. In the Institution Decision, we agreed with the District Court that "event node" does not need construction, and we continue to do so here. *See* Inst. Dec. 8. Independent claim 1 recites "creating, by an event node server, an event node ***in a multi-dimensional personal information network***, the event node ***corresponding to a situation***," "transmitting ***an invitation to establish a link*** with the event node server to the devices corresponding to each node in the projection formed in step (b)," "receiving a response from at least one of the devices from step (c) ***accepting the invitation to establish a link*** with the event node server," and "***establishing a link*** with each device accepting the invitation." Ex. 1001, 33:21–35; *see also* PO Resp. 3 (emphasizing claim 1's recitations that the "event node" is "in a multi-dimensional personal information network" and "correspond[s] to a situation."). Claim 20 includes similar recitations related to the "event node." Ex. 1001, 34:45–64. In view of this, we determine that the claim language itself provides sufficient meaning for the term "event node" and further construction is not necessary.[9]

---

[9] Patent Owner does not appear to dispute that we do not need to construe "event node," but rather attempts to provide further context as to the plain and ordinary meaning. *See* Tr. 21:8–18 (stating that "I think it is redundant

We agree with Petitioner that Patent Owner's proposal seeks to read into the term "event node" exemplary disclosure from the Specification. *See, e.g.*, Ex. 1001, 7:42–51 ("In the context of the NDSN, . . . *[f]or example*, an entity . . . establishes an event node in an NDSN that propagates up-to-date information on the situation"); *see* Reply 2–5. Claims 1 and 20 already recite an "an event node in a multi-dimensional personal information network, the event node corresponding to a situation," without further reciting that the event node propagates up-to-date information in an NDSN. Patent Owner does not persuade us that proper interpretation of "event node" requires that we read in these unclaimed features of exemplary embodiments. Claims are not limited to specific embodiments described in the specification. *See Phillips*, 415 F.3d at 1323.

> Though understanding the claim language may be aided by explanations contained in the written description, it is important not to import into a claim limitations that are not a part of the claim. For example, a particular embodiment appearing in the written description may not be read into a claim when the claim language is broader than the embodiment.

SuperGuide Corp. v. DirecTV Enterprises, Inc., 358 F.3d 870, 875 (Fed Cir. 2004) (citing *Electro Med. Sys. S.A. v. Cooper Life Sci., Inc.*, 34 F.3d 1048, 1054 (Fed. Cir. 1994)); *see also Thorner v. Sony Computer Ent. Am. LLC*, 669 F.3d 1362, 1366 (Fed. Cir. 2012) ("It is likewise not enough that the only embodiments, or all of the embodiments, contain a particular limitation.

[to construe event node to also include multidimensional personal information network] . . . We're not asking you to reconstrue. The claims say the event node is in the network . . . I don't even think you need to construe . . . it's kind of just the phraseology of how do we interpret this claim element in light of the spec.").

We do not read limitations from the specification into claims; we do not redefine words.”). The mere description of a preferred embodiment is not a limiting definition for a claim term. *See E-Pass Techs., Inc. v. 3Com Corp.*, 343 F.3d 1364, 1369 (Fed. Cir. 2003); *Liebel-Flarsheim Co. v. Medrad, Inc.*, 358 F.3d 898, 908–09 (Fed. Cir. 2004).

For these reasons, we decline to import limitations into the claim, as Patent Owner urges. We further discuss “event node” below in connection with the Parties’ dispute regarding whether Petitioner shows that Amidon teaches the claimed “event node.” Moreover, upon review of the Parties’ respective contentions, we determine that no express constructions of any other claim term is required for purposes of this Decision. *See Realtime Data, LLC v. Iancu*, 912 F.3d 1368, 1375 (Fed. Cir. 2019) (“The Board is required to construe ‘only those terms ... that are in controversy, and only to the extent necessary to resolve the controversy.’”) (quoting *Vivid Techs., Inc. v. Am. Sci. & Eng’g, Inc.*, 200 F.3d 795, 803 (Fed. Cir. 1999)).

C. Alleged Obviousness Over Amidon

1. *Overview of Amidon*

Amidon is titled “Systems and Methods for Social Network Based Conferencing” and is generally directed to systems and methods where members of social networks “can define and participate in conferences, with the extent of the participation and messaging within such conferences based on the structure of the underlying social network(s).” Ex. 1005, codes (54), (57). The conference may be defined on the basis of various parameters, such as social network parameters, degree of separation, or geographic. *Id.* at 2:57–63, 3:40–47, 4:5–9.

Figure 1, reproduced below, "is an illustration of an exemplary social network that may be used as the basis for one or more social network conferences." Ex. 1005, 5:18–20.

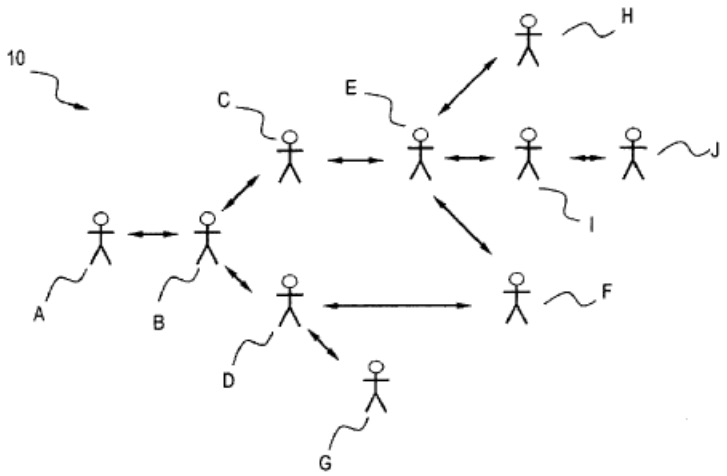

FIGURE 1

Specifically, "[Figure] 1 illustrates an exemplary social network 10 that may be used as the basis for one or more social network conferences." *Id.* at 6:58–60.

"Social network 10 represents any underlying social network structure (or subset thereof)." Ex. 1005, 6:63–65. In Figure 1, "links between users A, B, C, D, E, F, G, H, I, and J are shown by double-ended arrows." *Id.* at 6:60–61. Amidon adds that "one of skill in the art will recognize that social networks may be much more extensive," that "a full mapping of all live communications between members could comprise hundreds or thousands of users," and that "links between friends (or other contacts) . . . may be densely intertwined and overlap extensively." *Id.* at 7:40–47.

Figure 2, reproduced below, is "a functional block diagram of an exemplary messaging system including social network conferencing functionality." Ex. 1005, 5:21–23.

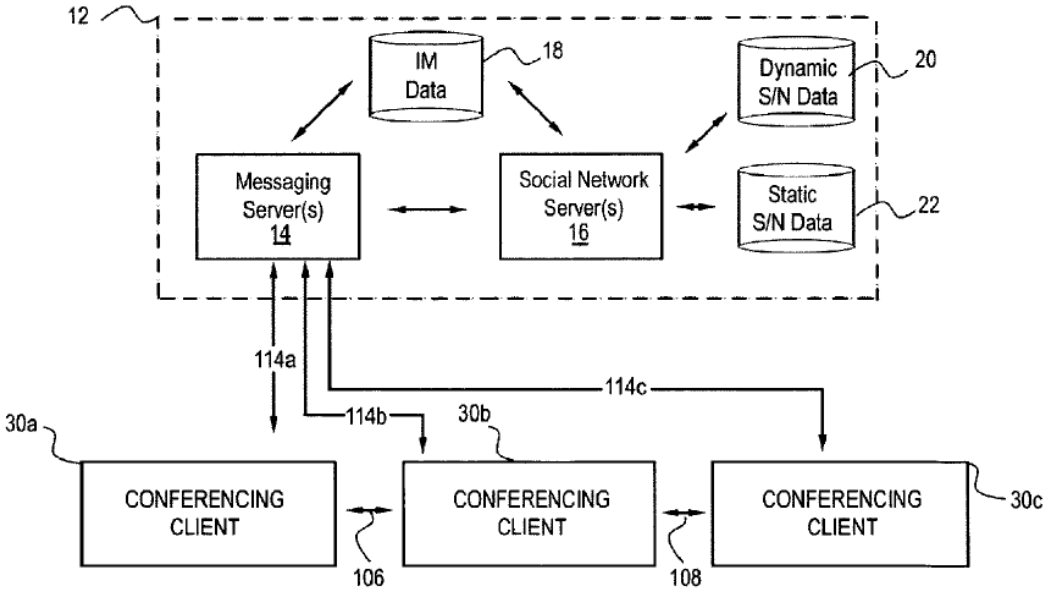

FIGURE 2

Figure 2 depicts system 12 including messaging server 14, social network server 16, and data stores 18, 20, and 22. Ex. 1005, 8:3–8. In addition, Figure 2 includes conferencing clients 30a, 30b, and 30c comprising one or more computing devices that provides messaging functionality and the ability to interact with other users. *Id.* at 8:12–18. In some embodiments, conferencing client functionality may be provided through web-based applications. *Id.* at 8:27–35. Conferencing clients 30a, 30b, and 30c interface with messaging server 14 via links 114a, 114b, and 114c. *Id.* at 8:36–40.

According to Amidon, conferencing clients 30 "support transmitting metadata to social network conferencing system 12 to define one or more social network conferences and to specify the extent to which a message

should be transmitted in a social network conference." Ex. 1005, 9:57–61. A user "may specify any number or combination of rules, preferences, and parameters in defining the extent of conference participation, distribution of messages, and distribution of replies to messages." *Id.* at 12:37–40. For example, "[b]ased on user location data, conference participation can be determined based on geographical parameters, such as users within a certain distance, users from a particular location, and so on." *Id.* at 12:59–65. Users may also define parameters that control conference participation, such as providing users with different access levels which allow users to moderate and participate fully in the conference, or allow users to participate but not moderate or only participate to a limited extent. *Id.* at 13:8–21. Messaging server may send an invitation to users to join in the conference via messaging connections and messaging client applications. *Id.* at 21:5–8.

Figure 4, reproduced below, "illustrates an exemplary user interface which may be rendered by a client device to provide for user interaction in social network based conferencing systems." Ex. 1005, 5:27–29.

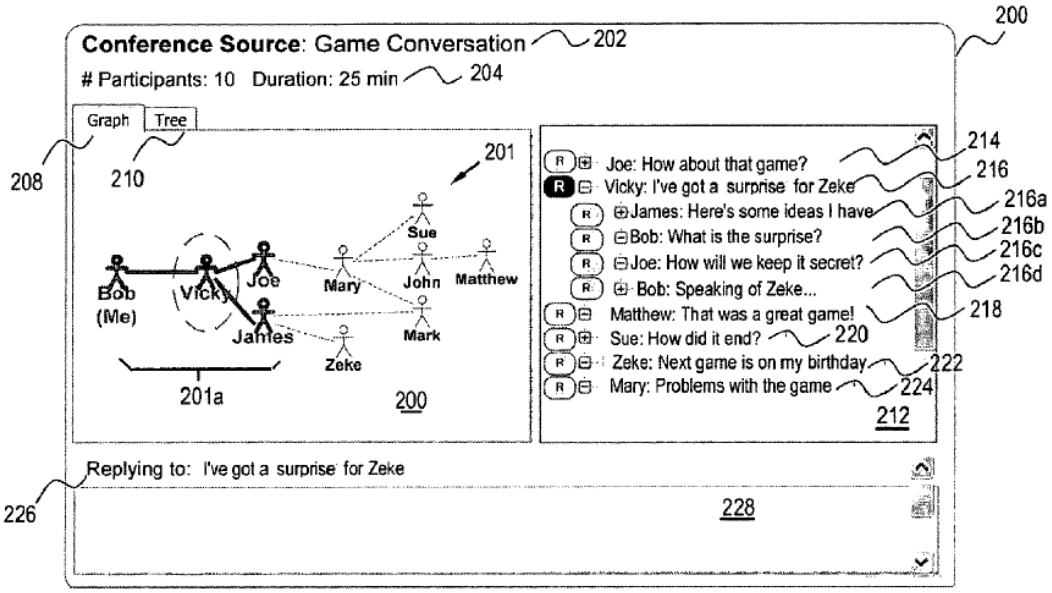

FIGURE 4

Figure 4 depicts window 200 of conferencing client 30, which includes several different areas and data indicators, such as title bar 202 ("Game Conversation"), conference metadata 204 (number of participants and duration), social network conference group 201, and conference thread display area 212, which shows a plurality of threads each comprising data (messages, content) exchanged among the members of the conference. Ex. 1005, 16:65–17:26.

Figure 5, reproduced below, "illustrates another exemplary user interface which may be rendered by a client device to provide for user interaction in social network based conferencing systems." Ex. 1005, 5:30–32.

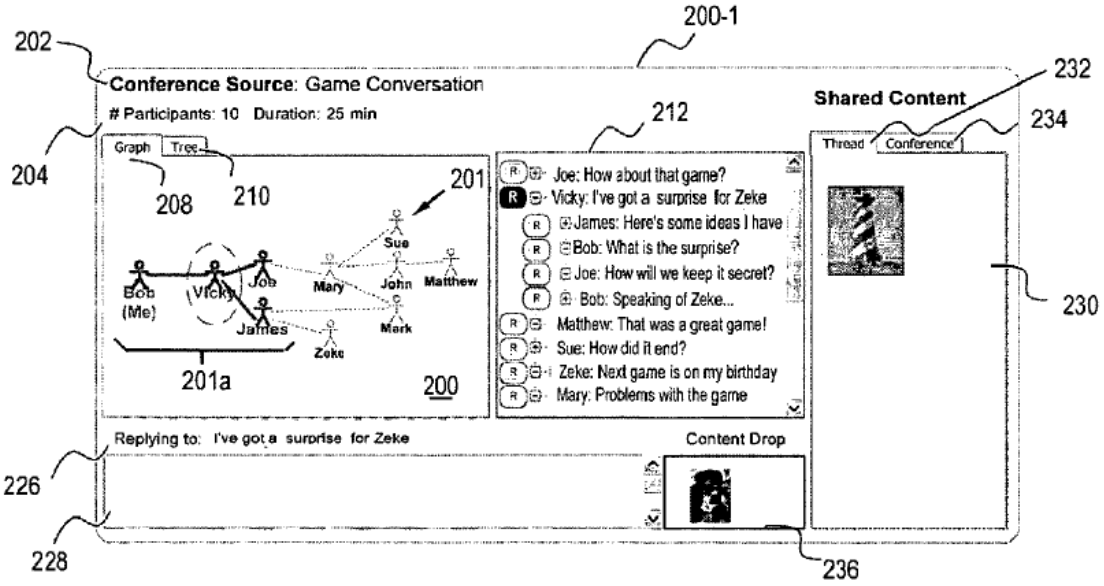

FIGURE 5

Figure 5 depicts an alternate window 200-1, which includes the same features as window 200 in Figure 4, but additionally displays information related to content sharing functionality in shared content area 230. Ex. 1005, 18:51–55. "[S]hared content area 230 includes icons or other indicators of content that is presently being shared amongst conference participants." *Id.* at 18:56–58.

2. *Discussion*

According to Petitioner, "Amidon renders obvious claims 1-7, 10-17, 19, and 20." Pet. 10. Asserting that "Amidon's teaching of a set of users communicating via a conference, which was created in response to a situation, corresponds to a *situational network*" (*id.* at 15), Petitioner argues that "Amidon renders obvious each element of the challenged claims" (*id.* at 14).

Having reviewed all of the Parties' arguments and evidence, we determine that Petitioner has established, by a preponderance of the evidence, that claims 1, 3–7 and 20 would have been obvious over Amidon. Pet. 10–36, 43–44; PO Resp. 3–15; Reply 2–16; Sur-reply 1–12. As noted below in Section II.D.3, Petitioner has established obviousness of claim 2 over Wong and Gogic. Accordingly, we need not and do not reach Petitioner's challenge of claim 2 as allegedly obvious over Amidon. Additionally, as discussed below in Section III, we grant Patent Owner's Request for Adverse Judgment with respect to claims 10–19. Accordingly, we need and do not reach Petitioner's challenge of claims 10–17 and 19 as allegedly obvious over Amidon.

With respect to Petitioner's challenge of claims 1, 3–7 and 20, the Parties' arguments raise two substantive disputes. The Parties dispute whether Amidon teaches an "event node," as recited in independent claim 1's limitation 1.1 and similar language in independent claim 20. Pet. 15–23, 43–44; PO Resp. 3–13; Reply 2–12; Sur-reply 1–12. Additionally, the Parties dispute whether Amidon teaches dependent claim 5. Pet. 33; PO Resp. 14–15; Reply 14–16. We discuss these disputes in detail below.

a) "event node"

Claim 1 recites "creating, by an event node server, an event node in a multi-dimensional personal information network, the event node corresponding to a situation." Ex. 1001, 33:21–23. Claim 20 includes similar language reciting an "event node." *Id.* at 34:45–48.

Petitioner contends that Amidon teaches these claim recitations limitation. Pet. 15, 43–44. Petitioner argues that "Amidon's social network 10 discloses a *multi-dimensional personal information network*." Pet. 16.

Petitioner elaborates that "Amidon's social network 10 'may be used as the basis for one or more social network conferences.'" *Id.* at 18 (quoting Ex. 1005, 6:58–60). Petitioner adds that "[s]ocial network server 16 defines social network relationships and preferences, and stores data defining social networks, member data (e.g., profile information), relationships, etc." *Id.* at 18–19 (citing Ex. 1005, 9:9–38).

Petitioner further argues that "Amidon's social network conference (as defined by the stored data and accessible via window 200) teaches the claimed *event node*." Pet. 20. Petitioner asserts various situations trigger conference creation:

> In Amidon, a social network conference (i.e., *the event node*) is created by social network server 16 (i.e., *the event node server*) upon detecting various *situations*—e.g., users listening to the same music, a certain number of users in the social network are involved in a conversation (e.g., related to a game), or users sharing content on a particular topic.

Pet. 22 (citing Ex. 1005, 13:57–14:29).

Petitioner elaborates that Amidon teaches multiple options for forming a conference, such as forming a conference that includes "all users currently listening to the same song, music by the same artist, music of the same genre, etc." *Id.* at 20–21 (citing Ex. 1005 13:34–35, 13:65–14:3). Petitioner cites other examples, including one in which "a user may indicate that the user wishes to automatically create a new conference any time the user is involved in a subset of a social network circuit related to a game when the subset includes three or more people." *Id.* at 21 (quoting Ex. 1005, 14:22–27).

Patent Owner argues that Amidon's social network conference fails to teach an "event node" because "a conference cannot be a node, let alone an

event node." PO Resp. 7 (citing Ex. 2009 ¶¶ 67–77). Relying on a dictionary definition, Patent Owner argues that "a conference is a group of individuals communicating with one another," and Amidon defines its social networking conference consistent with this meaning. *Id.* at 7–8 (citing Ex. 2009 ¶ 70; Ex. 1005, 3:4–21, Figs. 4, 5). That is, Patent Owner argues that Amidon's social network conference is nothing more than "an online meeting of individual users" who are communicating with one another (i.e., a social network), and a "group of individuals cannot be a node, let alone an event node." *Id.* at 9–10 (citing Ex. 1005, 17:21–26); *see also* Sur-reply 6–12. Patent Owner argues that because an event node is communicating information in a peer-to-peer fashion, an event node would be an element within a conference, but not the conference itself. PO Resp. 10 (citing Ex. 1001, 15:1–2, 7:48–50; Ex. 2009 ¶¶ 70, 73, 79).

Patent Owner also argues that Amidon's social network conference does not include an "event" because it does not include as a participant the situation or event underlying the conference. PO Resp. 10–11 (citing Ex. 1005, 17:7–10, Figs. 4–5). Patent Owner argues that Amidon's Figure 3, which depicts the architecture of a relational database, does not support that the situational network conference is an "event node." *Id.* at 11–13; *see also* Sur-reply 9–12.

Petitioner has sufficiently established that Amidon teaches the recited "event node." Petitioner persuades us that Amidon's architecture provides a social network (the recited "situational network") and the social network conference within the social network ***is*** the event node. In particular, the evidence demonstrates that Amidon separately teaches a social network and a social network conference. For example, as Petitioner notes, Amidon

suggests that a conference may include a subset of the users in its social network, such as "all users currently listening to the same song" or "a subset of a social network circuit related to a game when the subset includes three or more people." Ex. 1005, 13:6514:3, 14:22–27; Pet. 20–22; *see also* Ex. 1005, 13:57–14:29. Therefore, Patent Owner's argument that the social network conference is the social network (*see* Sur-reply 6–8), rather than the event node, does not persuasively address Petitioner's contentions.[10]

Patent Owner's argument that Amidon's social network conference merely comprises a group of individuals communicating with each other so it cannot be an event node does not take into account that Amidon's social network conference is also defined by a data structure, such as the data structure shown in Figure 3. *See* PO Resp. 7–10; Pet. 19–20; Reply 7–8. The parties do not dispute that Amidon's social network conference is defined by a data structure. PO Resp. 11–13 (e.g., "Fig. 3 shows a database entry for a conference."); Reply 7. We find persuasive Petitioner's argument that "the conference itself (as defined by the stored data and accessible via window 200) is the claimed event node." Reply 7.

[10] Portions of Dr. Rubin's testimony also rely on this misinterpretation of Petitioner's position, and we, therefore, do not find it persuasive. *See, e.g.*, Ex. 2009 ¶ 69 ("the event node is a node within the NDSN and cannot constitute a social network"), ¶ 71 ("In contradiction to what the petitioner claims, an event node cannot act as the social network as it exists within the NDSN").

Figure 3 of Amidon is reproduced below.

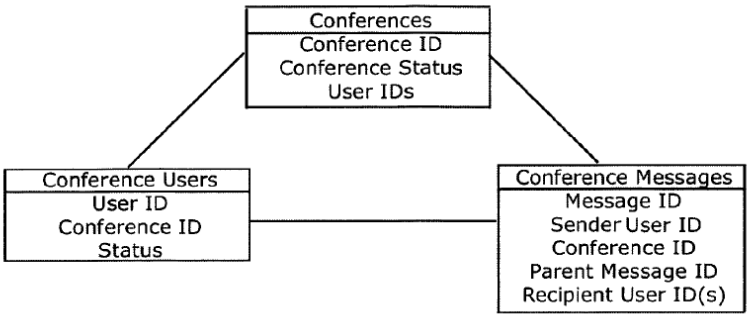

Figure 3 shows data structures used to store social network conferences. Ex. 1005, 15:5–8. In particular, Figure 3 shows a data structure with three tables, including table "Conferences" with columns "Conference ID," "Conference Status," and User IDs", table "Conference Users" with columns "User ID," "Conference ID," and "Status," and table "Conference Messages" with columns "Message ID," "Sender User ID," "Conference ID," "Parent Message ID," and "Recipient User ID(s)." In other words, the data defining the social network conference can include, for example, a Conference ID, the users, and the messages. *See* Reply 7; Pet. 20–21.

Dr. Rubin testifies that a "node within a social network is an object that has attributes defining the node." Ex. 2009 ¶ 69; *id.* ¶ 34. Dr. Rubin further testifies that "[a] node can be various types objects," and provides examples from Petitioner's Graph API documentation that states:

> [A] node is an individual object with a unique ID. For example, there are many User node objects, each with a unique ID representing a person on Facebook. Pages, Groups, Posts, Photos, and Comments are just some of the nodes of the Facebook Social Graph.

Id. ¶ 34. With regard to the "event node," Dr. Rubin further testifies that "the event node corresponds to an event and as such, would have the unique

properties that define the event." Ex. 2009 ¶ 69. We agree with Petitioner that this understanding is consistent with the disclosure in Amidon – that the social network conference is an object in the network with a unique ID (i.e., Conference ID) and other attributes defining it (i.e., users, messages). *See* Reply 7–8. Moreover, Patent Owner does not explain why Petitioner's Groups, which have a unique ID, are nodes, but Amidon's social network conferences, which also have a unique ID, are not nodes.

Dr. Rubin also testifies that the "event node" is a data structure:

> Q. And an event node would be an object with attributes that defines the event; is that fair?
> A. Yes.
> Q. Those objects are simply data structures, right?
> A. That's what they are.

Ex. 1020, 33:2–7. This further supports that Amidon's social network conferences teaches the recited "event node."

We are also not persuaded that the situation or event underlying the conference must be a *participant* to the conference to qualify as an "event node." PO Resp. 10–11. As discussed above, we are persuaded by Petitioner's arguments that Amidon's social network conference itself teaches the claimed "event node." Moreover, Amidon teaches that conferences may be formed based on any number of parameters, including, for example, user identity, membership in a group, interests, demographic characteristics, user activity, geographic parameters, etc. Ex. 1005, 12:44–65; *see* Pet. 15, 16–23. As shown in Figures 4 and 5 of Amidon, the social network conference corresponds to "Game Conversation," which is the situation or underlying event. We are also not persuaded by Patent Owner's argument that Amidon's "architecture fails to include a database record for the situation underlying the conference." PO Resp. 13. As Petitioner

explains, the "conference ID" identifies the conference, which indicates that this information is stored in the database. Reply 6.

Patent Owner also argues that "the architecture of relational database is not the claimed 'event node' which communicates information regarding a situation in a peer-to-peer fashion with other nodes." PO Resp. 13. As discussed above in Section II.B, we decline to import these limitations into the claim, so this argument is not persuasive. Moreover, as Petitioner points out, the '454 patent describes embodiments where the event node connects users to facilitate communication about the event or situation. Reply 9 (citing Ex. 1001, 30:39–61; Ex. 1018 ¶ 17). For example, a school district superintendent creates a node in the situational network to inform a group of users that school will be closed tomorrow, and propagates a message to users in selected groups (e.g., teachers, staff, parents, snow removal). Ex. 1001, 30:39–61, Fig. 25; Ex. 1018 ¶ 17. As Dr. Jansen testifies, "[t]he node in this embodiment simply connects users to facilitate messaging." Ex. 1018 ¶ 17. Similarly, Amidon's social network conference connects users to facilitate messaging about a situation, i.e., a "Game Conversation." Ex. 1018 ¶ 17; Ex. 1005, Figs. 4, 5; Reply 9

We, therefore, determine that, on the record before us, Petitioner's cited evidence sufficiently supports its contentions regarding the "event node" recited in limitation 1.1 and similar language of claim 20.

b) Claim 5

Claim 5 depends from claim 4, which recites "(f) providing a first set of information about the situation to each device corresponding to the nodes in the projection that has established a link with the event node server." Ex.

1001, 33:44–47. Claim 5 adds that "the first set of information in step (f) includes targeted advertisements." *Id.* at 33:47–48.

Petitioner argues that Amidon teaches the limitations of both claims 4 and 5. Pet. 31–33. Addressing claim 4, Petitioner argues that "Amidon discloses sending messages about the situation to which the conference is related." Pet. 31–32 (citing Ex. 1005, 17:21–35, 17:38, Fig. 4; Ex. 1003 ¶ 115). For example, Petitioner asserts that Amidon's Figure 4 embodiment discloses users sending messages about a game, which is the situation to which the conference relates. *Id.* at 32 (citing Ex. 1005, 17:21–35). Petitioner also argues that the claim language "a first set of information about the situation" refers to printed matter and is not entitled to patentable weight. Pet. 32–33. Turning to claim 5's recitation of "targeted advertisements," Petitioner argues that "Amidon teaches this claim because Amidon discloses that 'a user may direct announcements or sales pitches toward members of a social network based on membership parameters, . . . such as demographic groupings.'" *Id.* at 33 (citing Ex. 1005, 2:30–35; Ex. 1001, 27:41–42, 27:55–57; Ex. 1003 ¶¶ 118–119).

In its Response, Patent Owner argues that "the Petition merely identifies a statement in Amidon's Background of the Invention," asserting that this fails to teach claim 5:

> that statement in the Background is not made in connection with the later disclosed invention in Amidon, which does not discuss using the network for targeted advertisements. Furthermore, while targeted advertisements may have been known, claim 5 requires that the "first set of information about the situation" includes targeted advertisements (i.e., the targeted advertisement needs to include information about the situation), which is not disclosed in Amidon.

PO Resp. 14–15.

In its Reply, Petitioner maintains that claim 5 is unpatentable over Amidon. Reply 14–16. Petitioner argues that it would have been obvious to use targeted advertising, as discussed in Amidon's Background section, with other disclosures in Amidon. *Id.* (citing Ex. 1005, 2:29–37, 2:57–63, 3:22–47, 4:5–9, 12:37–65; Ex. 1003 ¶¶ 48–67, 118–119; Pet. 10, 11, 15 33; Ex. 1021 ¶ 29; PO Resp. 15). Noting claim 5's recitation that the "first set of information . . . includes targeted advertisements," Petitioner argues that the open-ended claim language is met if the first set of information includes both information about the situation and targeted advertisements. *Id.* at 15–16. Petitioner also reiterates its position that the particular content of the "first set of information" recited in claims 4 and 5 should not be given patentable weight. *Id.* at 16.

These arguments were not addressed by Patent Owner in its Sur-reply or at oral argument. *See generally* Sur-reply; Tr.

Weighing the Parties' arguments and evidence, we find Petitioner's more persuasive. Petitioner's unrebutted arguments and evidence persuade us that Amidon teaches claim 4's recitation of "providing a first set of information about the situation to each device corresponding to the nodes in the projection that has a link with the event node server." Ex. 1001, 33:44–46; Pet. 32–33 (citing Ex. 1005, 17:21–35, 17:3817:29–32, Fig. 4; Ex. 1003 ¶¶ 113–117). Additionally, notwithstanding Patent Owner's argument that Amidon does not disclose targeted advertising in any of its exemplary embodiments, Petitioner persuades us that Amidon's background discussion of known use of target advertising would have rendered it obvious to include targeted advertising in the first set of information provided to each device. Pet. 33 (citing Ex. 1005 2:30–35; Ex. 1003 ¶¶ 118–119); Reply 14–16

(citing Ex. 1005, 2:29–37, 2:57–63, 3:22–47, 4:5–9, 12:37–65; Ex. 1003 ¶¶ 48–67, 116, 118–119; Ex. 1021 ¶¶ 29–30, 28–31; Pet. 10–11, 15, 33. For example, we find persuasive Petitioner's assertion that "[i]t would have been readily apparent to a [person of ordinary skill in the art] that [Amidon's targeted advertising disclosure] would apply to the social network-based communication tools of Amidon's disclosed embodiments." Reply 15. We also find persuasive Petitioner's unrebutted argument that even if the "first set of information" provided "includes information about the situation (claim 4) and *additionally includes* targeted advertisements (claim 5)," that meets the open-ended claim language. *Id.* at 15–16 (citing *Mars, Inc. v. H.J. Heinz Co., L.P.*, 377 F.3d 1369, 1376 (Fed. Cir. 2004)). Accordingly, Petitioner persuades us that claim 5's recitation regarding targeted advertising would have been obvious.

Moreover, even if Petitioner had not persuaded us that it would have been obvious to implement claim 5's recitation regarding targeted advertising, Patent Owner does not persuasively rebut Petitioner's argument that the claims' recitations of "information about the situation" and "targeted advertisements" are directed to printed matter not entitled to patentable weight. Pet. 32–33 (citing Ex. 1003 ¶ 116; *Praxair Distribution, Inc. v. Mallinckrodt Hosp. Prods. IP Ltd.*, 890 F.3d 1024, 1031–32 (Fed. Cir. 2018); *C R Bard Inc. v. AngioDynamics, Inc.*, 979 F.3d 1372, 1381 (Fed. Cir. 2020); *In re Distefano*, 808 F.3d 845, 848 (Fed. Cir. 2015)); Reply (citing Pet. 32; Ex. 1003 ¶ 116; Ex. 1021 ¶ 31).

D. ALLEGED OBVIOUSNESS OVER WONG AND GOGIC

1. *Overview of Wong*

Wong "relates to the field of online networks." Ex. 1006 ¶ 1. Wong's Figure 1 is reproduced below.

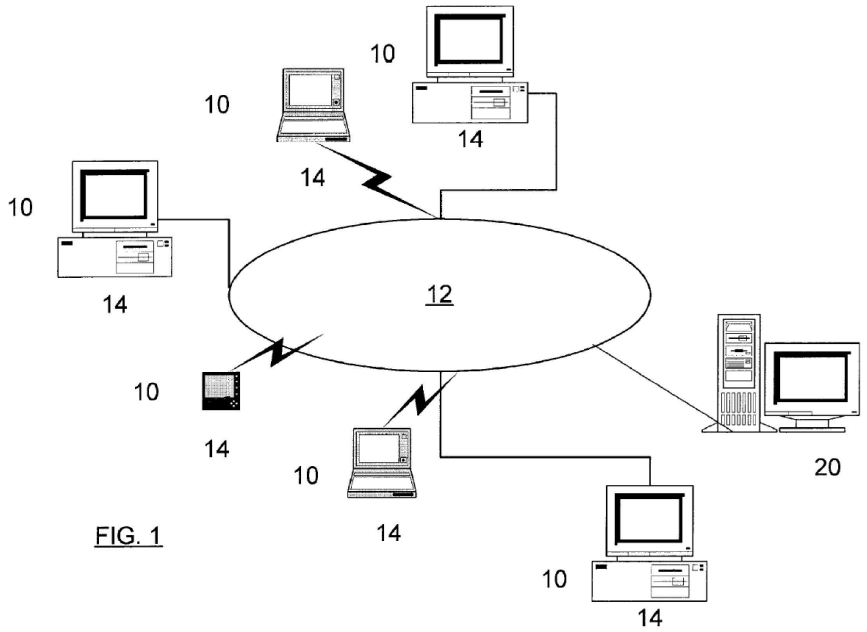

FIG. 1

Wong's "[Figure] 1 is a schematic diagram illustrating a computer network." *Id.* ¶ 9.

In the computer network, users 10 with computer terminals 14 can access "computer network 12 such as the Internet." *Id.* ¶ 17. Additionally, "[a] social network server or servers 20 maintain a system comprising an Internet website, database and associated data, which is accessible to users 10. Server 20 has the hardware and software required to operate an internet-accessible social network, including web server, email server, databases, data storage and the like." *Id.*

Wong further discloses implementing "an interactive computerized network comprising a plurality of nodes, . . . each node linked to one or

more nodes . . . by linkages." *Id.* ¶ 6. An example appears in Figure 2, reproduced below.

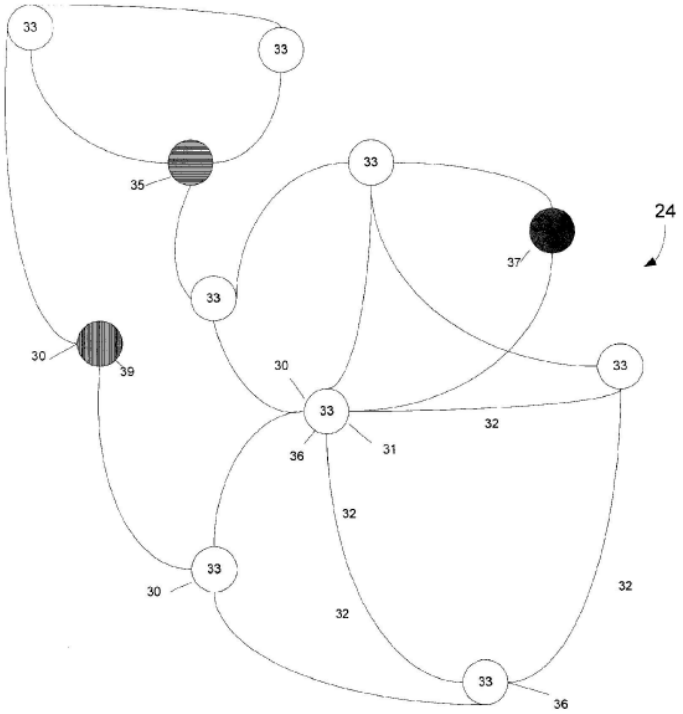

Fig. 2

Wong's "[Figure] 2 is a schematic diagram illustrating a network of living and non-living entities." *Id.* ¶ 10.

In this network, linkages 32 connect nodes 30. *Id.* ¶ 21. The network may include different node types. *E.g.*, *id.* at code (57), ¶ 21. For example, "[s]uch node types can include persons, places, objects, and animals." *Id.* at code (57). Additionally, there may be more or fewer than four main node types. *Id.* ¶ 22.

Network users can communicate using social networking features:

> The social networking features of the network of living and non-living entities facilitate many forms of communication, such as notification of updates, alerts, sharing of files and photos, blogs, instant messaging and comments. Also, the sender can select

> those in the network of living and non-living entities who can receive or view a particular communication or file.

Id. ¶ 44.

2. *Overview of Gogic*

Gogic provides group communication services in a communication system. Ex. 1007, 2:21–30. Gogic illustrates an exemplary communication system in Figure 2, which is reproduced below. Ex. 1007, 5:58–63.

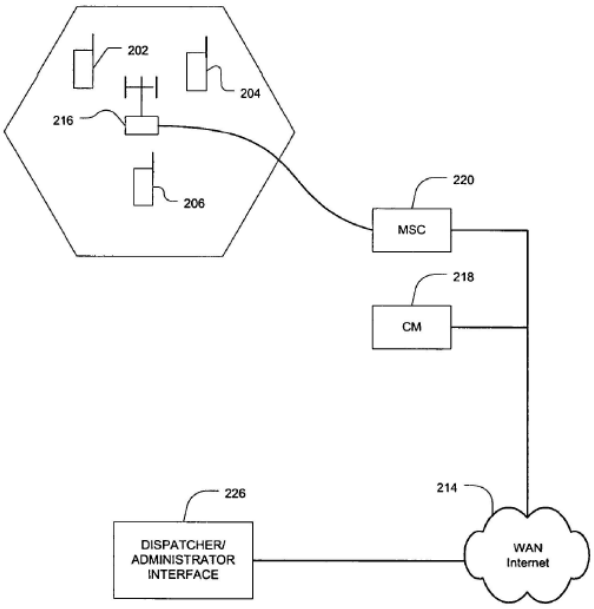

FIG. 2

Gogic's "[Figure] 2 illustrates a wireless communication system configured for group communication." Ex. 1007, 3:62–64.

This communication system includes communication devices (CD) 202, 204, and 206, linked to base station 216, mobile switching center (MSC) 220, and data network 214. Ex. 1007, 6:22–24, 7:50–60, 8:14–20. In this communication system, group members use CDs 202, 204, 206 to communicate with each other. *Id.* at 6:22–24.

The communication system also includes communication manager (CM) 218 and external administrator interface 226, which may facilitate system management. Ex. 1007, 7:17–34. For example, "CM 218 maintains a list of defined groups." *Id.* at 7:17. CM 218 may get group definitions via external administrator interface 226. *Id.* at 7:20–22.

Additionally, "[i]n one embodiment . . . , the administrator interface 226 accommodates a dispatcher for requesting the formation of an ad-hoc communication group of users located in a specific vicinity or region and for regulating communication . . . based on various criteria." *Id.* at 7:25–30. This may help, for example, in emergency situations by facilitating more appropriately or more efficiently deploying emergency services. *Id.* at 4:16–20.

Gogic discusses an example of forming an ad-hoc location-based communication group in connection with Figure 4, which is reproduced below.

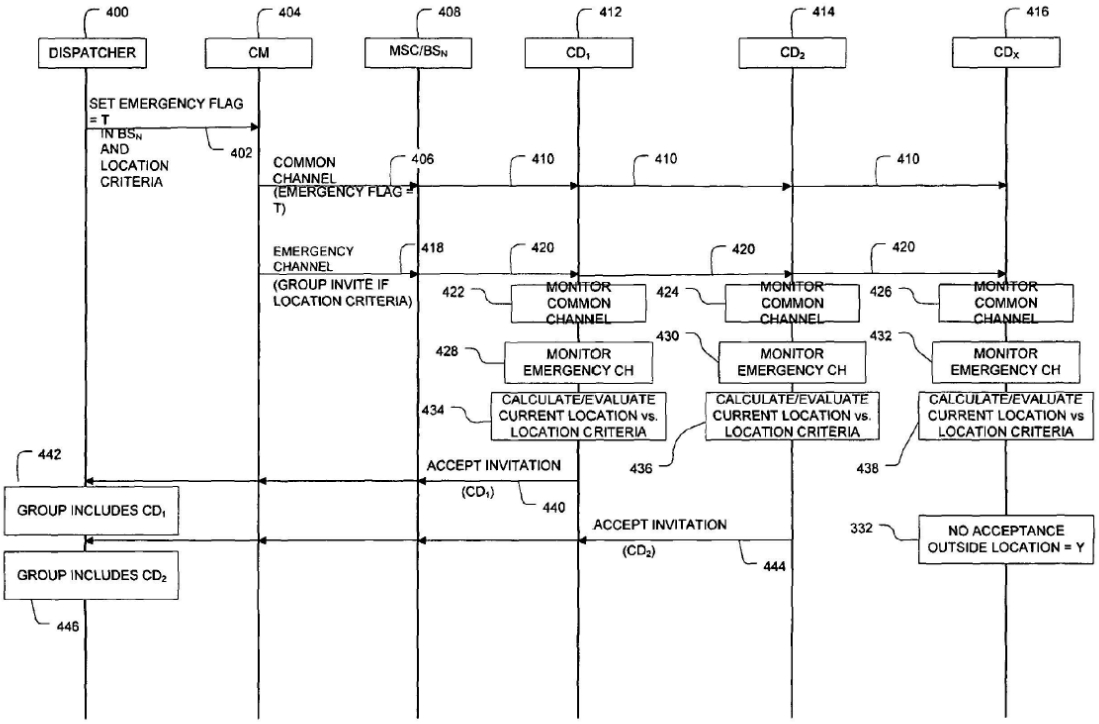

FIG. 4

Gogic's "[Figure] 4 illustrates the formation of an ad-hoc group in response to an emergency notification, wherein the group is formed on the basis of proximity to a designated location." Ex. 1007, 10:16–18.

In this process, dispatcher 400 detects circumstances in which it would help for proximately located users to communicate with each other. Ex. 1007, 10:18–21. Dispatcher 400 sends CM 404 a request to set an emergency flag on a channel commonly monitored by CDs 412, 414, 416. *Id.* at 10:21–37. This request may include "a group membership location criteria such as region or location criteria defining the inclusive boundary of users that are invited to join the group." *Id.* at 10:24–29, 10:35–37. CM 404 instructs MSC/BS$_N$ 408 to send a set emergency flag "on a common channel in at least an area serviced by a specific base station . . . that services the area surrounding the desired location of users to be included within the ad-

hoc group." *Id.* at 10:37–42. Additionally, MSC/BS_N 408 sends "a broad or indiscriminant or generalized invitation to join a group to all recipient CDs with their invitation acceptance being conditional upon the CD qualifying according to the location criteria also transmitted in the broad indiscriminant invitation." *Id.* at 10:45–50.

CDs 412, 414, 416 detect the emergency flag and monitor for further information on an emergency broadcast channel. Ex. 1007, 10:51–56. CDs 412, 414, 416 thereby receive the location-contingent invitation to join the group. *Id.* at 10:57–61. CDs 412, 414, 416 assess whether they meet the location requirements of the invitation. *Id.* at 10:62–66. In the example of Figure 4, CDs 412, 414 meet the location requirements and accept the invitation, which is relayed to dispatcher 400 via CM 404. *Id.* at 10:66–11:2, 11:4–7. Dispatcher 400 adds CDs 412, 414 to the list of confirmed group members. *Id.* at 11:7–9. In the example of Figure 4, CD 416 does not meet the location requirements, so it does not accept the invitation. *Id.* at 11:10–13.

3. *Discussion*

Petitioner contends that "[t]he combination of Wong and Gogic renders obvious claims 1–4, 6, 8–18 and 20." Pet. 45. Petitioner asserts that Wong "teaches communication between nodes in a social network." *Id.* at 46. Petitioner argues that Gogic discloses a communication system and that "an ad-hoc communication group may be formed, for example, in response to an emergency notification and based on the geographic proximity of users to a designated location." *Id.* at 47. According to Petitioner, "[a person of ordinary skill in the art] would have been motivated

to modify Wong's social network communication system to incorporate Gogic's teachings of an ad-hoc location-based communication group." *Id.*

Having reviewed all of the Parties' arguments and evidence, we determine Petitioner has established, by a preponderance of the evidence, that claims 1–4, 6, 8, 9, and 20 would have been obvious over Wong and Gogic. Pet. 45–71; PO Resp. 15–25; Reply 17–22; Sur-reply 12–15. Additionally, as discussed below in Section III, we grant Patent Owner's Request for Adverse Judgment with respect to claims 10–19. Accordingly, we need and do not reach Petitioner's challenge of claims 10–18 as allegedly obvious over Wong and Gogic.

Patent Owner disputes two aspects of the claim challenges over Wong and Gogic. Patent Owner disputes Petitioner's assertion that an ordinarily skilled artisan would have combined the teachings of Wong and Gogic. Patent Owner also argues that Petitioner has not addressed the challenged claims' recitation of "event node" sufficiently. We discuss those two issues in detail below.

a) Whether an Ordinarily Skilled Artisan Would Have Combined Wong and Gogic

Petitioner argues that it would have been obvious to combine Gogic's teaching of an ad-hoc communication group in certain situations with Wong's social network. Pet. 47–49. Citing evidence of general knowledge that online communication could help with emergency planning and response, Petitioner asserts that an ordinarily skilled artisan would have recognized utility in leveraging Wong's social network for sending users updates or alerts during an emergency. *Id.* at 47–48. Petitioner argues that an ordinarily skilled artisan would have had motivation and a reasonable

expectation of success in configuring Wong's social network to have an ad-hoc communication group like Gogic's, noting that both references discuss group communication over a network. Pet. 48–49. According to Petitioner, an ordinarily skilled artisan would have been motivated to combine the references' disclosures "at least in an emergency situation, to allow for efficient communication and appropriate deployment of emergency services." *Id.* at 49.

In response, Patent Owner contends that an ordinarily skilled artisan "would not have been motivated to combine Gogic with Wong as such combination would have been technically infeasible." PO Resp. 21. Arguing that Gogic focuses on wireless technologies to implement its location-based ad-hoc network, Patent Owner asserts that an ordinarily skilled artisan would not know "how to incorporate a cellular-connected mobile device into Wong's teachings." *Id.* at 22–23. Patent Owner also argues that an ordinarily skilled artisan would have considered it impossible to incorporate Wong's social network into Gogic's system. *Id.* at 24.

Weighing the Parties' arguments and evidence, Petitioner persuades us that a person of ordinary skill in the art would have had motivation to configure Wong's social network with an ad-hoc communication network like Gogic's, as well as a reasonable expectation of success. As Petitioner argues, Gogic's disclosure that the ad-hoc communication network "may allow emergency services to be more efficiently or more appropriately deployed" would have motivated adding such an ad-hoc communication network to Wong's system. Pet. 48; Ex. 1007, 4:20–24.

Additionally, contrary to Patent Owner's arguments, Petitioner's evidence demonstrates technical compatibility of the references' disclosures.

As Petitioner notes, Gogic discloses using its approach with a wide range of technologies, including "portable or desktop computers." Ex. 1007, 4:46–49; Pet. 48. Wong likewise discloses implementing its social network with a wide range of technologies, such as "laptops, desktops, handheld, personal digital assistants, personal digital assistants, [or] mobile telephones." Ex. 1006 ¶ 17; Pet. 49. These disclosures show that a person of ordinary skill in the art would have had a reasonable expectation of success implementing Gogic's method in Wong's social network using, for example, desktop computers.[11]

Patent Owner recognizes that Gogic discloses implementing its system with desktop computers. PO Resp. 22. But Patent Owner contends that a person of ordinary skill in the art would not have known how to implement Gogic's invention, such as its location determination, using desktop computers. *Id.* This argument does not recognize that, as a prior art patent, Gogic is presumed enabled, including its disclosure of using desktop computers to implement its system. *Apple Inc. v. Corephotonics, Ltd.*, 861 F. App'x 443, 450 (Fed. Cir. 2021) (nonprecedential; *inter partes* review context); *Amgen Inc. v. Hoechst Marion Roussel, Inc.*, 314 F.3d 1313, 1354 (Fed. Cir. 2003).

Patent Owner's arguments and evidence do not rebut this presumption. For example, Dr. Rubin's testimony that "from the descriptions and figures provided in Gogic it would *suggest* that location is determined via technologies specific to wireless networks and telecommunications" does not persuade us that Gogic fails to enable

[11] Accordingly, Patent Owner's argument about the difficulties of modifying Gogic to use Wong's social network are inapposite. PO Resp. 24.

implementing its approach with desktop computers, such as those used in Wong. Ex. 2009 ¶ 87 (emphasis added). To the extent Gogic suggested wireless technologies as a way to determine location, that does not detract from Gogic's disclosure of using other technologies, including desktop computers, to implement its invention.

b) "event node"

Petitioner argues that "[t]he Wong-Gogic combination teaches" limitation 1.1, including that limitation's "event node" and refers back to that assertion when addressing independent claim 20, which also recites an "event node." Pet. 51–54 (citing Ex. 1006 ¶¶ 17–19, 21, 22, 24, 26, 27, 31–33, 44, Figs. 2, 4–6; Ex. 1007, 7:25–34, 10:16–11:13, Fig. 4; Ex. 1003 ¶¶ 174–180), 70. Petitioner contends that the combination of Wong's discussion of node-based information sharing and Gogic's discussion of connecting users for communication in an ad-hoc communication group associated with an event would have suggested and rendered obvious including an event node in Wong's system. *E.g.*, Pet. 52–53 (citing Ex. 1006 ¶¶ 19, 21, 22, 24, 26, 27, 31–33, 44, Figs. 2, 4–6; Ex. 1007, 7:25–34; 10:16–11:13, Fig. 4; Ex. 1003 ¶¶ 177–178). According to Petitioner and Dr. Cooperstock, Wong's discussion of adding new nodes and node types and Gogic's discussion of event-based communication would have made it obvious to implement event-based communication in Wong's system by following Wong's suggestion of creating new node types to include an event node. Pet. 53 (citing Ex. 1006 ¶¶ 21, 22, 26, 27, 44, Figs. 5, 6; Ex. 1007, 7:25–34, 10:16–11:13, Fig. 4); Ex. 1003 ¶¶ 177–178 (citing Ex. 1006, ¶¶ 21, 22, 26, 27, 44, Figs. 5, 6; Ex. 1007 7:25–34, 10:16–11:13, Fig. 4; Ex. 1010, 1:13–16, 3:56–59).

Patent Owner faults Petitioner for failing to show that either Wong or Gogic discloses an "event node." PO Resp. 16–21; Sur-reply 12–15. Patent Owner notes that Petitioner recognizes "Wong describes four exemplary 'main node types'—people, places, objects, animals," without disclosing an "event node." PO Resp. 16. Patent Owner further argues that Gogic's discussion of various entities in its communication system also omits an "event node." *Id.* at 17–21. Noting that "Petitioner does not contend that either Gogic or Wong individually teaches an event node," Patent Owner asserts that Petitioner only has conclusory arguments and testimony to address the "event node." Sur-reply 13–15.

Weighing the Parties' arguments and evidence, Petitioner persuades us that Wong and Gogic, in combination, suggested and rendered obvious using an event node in Wong's system. Pet. 51–54; PO Resp. 16–21; Reply 17–21; Sur-reply 12–15. As Petitioner notes, Wong discloses multiple node types and expressly suggests the possibility of additional node types, as well as adding nodes to its social network. Ex. 1006 ¶¶ 21–22, 26–27; Pet. 53. Wong further discloses using the social network's nodes for communication between different entities, including providing notifications or alerts. Ex. 1006 ¶ 44; Pet. 53. As Petitioner's arguments and evidence illustrate, Gogic discloses a useful approach for providing notifications or alerts via a common communication connection. *E.g.*, Pet. 46–49 (citing Ex. 1007, 4:16–24, 5:65–6:2, 10:16–11:13, Abstract, Fig. 4; Ex. 1003 ¶¶ 60–62, 167–168), 53 (citing Ex. 1007, 7:25–34, 10:16–11:13, Fig. 4; Ex. 1003 ¶¶ 177–178). Accordingly, Petitioner's arguments and evidence persuade us that Wong's disclosure of communicating via nodes, together with Gogic's disclosure of connecting certain users via a common communication

connection relevant to an event, would have suggested to an ordinarily skilled artisan to connect users to a common node to provide alerts and notifications related to the event.

Thus, as Dr. Cooperstock explains, the teachings of Wong and Gogic would have suggested to an ordinarily skilled artisan the utility of connecting Wong's users to a new event node to facilitate more effective handling of the event:

> Based on these teachings of Gogic—and because, in Wong, communication happens between nodes, EX1006, ¶44—a POSA would have recognized that a new node (i.e., *an event node*) related to the identified event or condition (i.e., *a situation*) would be useful in Wong's social network to facilitate communication related to the event or condition. The nodes/users linked to this new event node in Wong's system would, thus, form an ad-hoc communication group, which is desirable as taught by Gogic.

Ex. 1003 ¶ 177. Contrary to Patent Owner's argument, Dr. Cooperstock's opinion is not conclusory, but logically derived from the teachings of Wong and Gogic, as well as supported by evidence of general knowledge in the field. Ex. 1003 ¶¶ 177–178 (citing Ex. 1006 ¶¶ 21, 22, 26, 27, 44, Figs. 5, 6; Ex. 1007, 7:25–34, 10:16–11:13, Fig. 4; Ex. 1010, 1:13–16, 3:56–59); *see also* Ex. 1003 ¶ 164 (citing documentary evidence of general knowledge of using common information source to facilitate effective handling of events). Petitioner persuades us that, by collectively suggesting a node to provide certain users with information related to an event, Wong and Gogic suggest an event node, notwithstanding that the references do not individually use the same terminology as the challenged claims, i.e., "event node."

We do not agree with Patent Owner's assertion that because "neither Wong nor Gogic *disclose* a network comprising an 'event node'

corresponding to a situation or event, both necessarily fail to *disclose or suggest* 'event node server' hosting an 'event node.'" PO Resp. 20 (emphasis added). Merely because neither reference individually used the claim language verbatim, it does not follow that the references together failed to suggest the claim limitation to an ordinarily skilled artisan. The test for obviousness is not whether the claimed invention is expressly suggested in any one or all of the references, but whether the claimed subject matter would have been obvious to those of ordinary skill in the art *in light of the combined teachings of those references*. *See In re Keller*, 642 F.2d 413, 425 (CCPA 1981); *In re Burckel*, 592 F.2d 1175, 1179 (CCPA 1979) ("[A] reference must be considered not only for what it expressly teaches, but also for what it fairly suggests.").

Additionally, Patent Owner's criticism that Dr. Cooperstock lacked knowledge of using cellphones with social networks does not undermine Petitioner's position. PO Resp. 20–21. As Petitioner notes, Dr. Cooperstock and Dr. Rubin both testify about the level of ordinary skill in the art, and neither suggests that it necessarily requires any particular experience with cellphones. Ex. 1003 ¶ 45; Ex. 2009 ¶ 35. Nor does Patent Owner argue that the level of ordinary skill in the art requires any particular experience with cellphones. *See generally* PO Resp; Sur-reply. Moreover, Petitioner persuades us that even if the level of ordinary skill in the art required knowledge of cellphones, Dr. Cooperstock is qualified to opine from the vantage point of a person of ordinary skill in the art. Reply 22 (citing Ex. 2010, 63:8–11; *Osseo Imaging, LLC v. Planmeca USA Inc.*, 116 F.4th 1335, 1340–41 (Fed. Cir 2024) ("An expert need not have acquired that skill level prior to the time of the invention to be able to testify *from the vantage point*

of a person of ordinary skill in the art.”)). Furthermore, the challenged claims do not require implementation with cellphone technology, and as discussed above, Petitioner shows that it would have been obvious to combine Wong and Gogic using desktop computers, regardless of Dr. Cooperstock’s knowledge of using cellphones with social networks.

III. REQUEST FOR ADVERSE JUDGMENT

Patent Owner “requests that the Board cancel claims 10–19.” Req. 2. Patent Owner represents that Petitioner does not oppose the request. *Id.* Given that Petitioner has not opposed Patent Owner’s Request, we find it appropriate to grant Patent Owner’s Request for Adverse Judgment in these circumstances.

IV. CONCLUSION

For the foregoing reasons, we are persuaded that Petitioner has established by a preponderance of the evidence that claims 1–9 and 20 of the ’454 patent are unpatentable.

Claims	**35 U.S.C. §**	**References/Basis**	**Claims Shown Unpatentable**	**Claims Not Shown Unpatentable**
1–7, 20[12]	103(a)	Amidon	1, 3–7, 20	
1–4, 6, 8,	103(a)	Wong, Gogic	1–4, 6, 8, 9, 20	

[12] Because we determine that Petitioner has shown that the combination of Wong and Gogic renders obvious dependent claim 2, we do not reach Petitioner’s contentions that Amidon renders obvious dependent claim 2. Also, because we grant Patent Owner’s Request for Adverse Judgment with respect to claims 10–19, we do not reach Petitioner’s challenge of claims 10–19 as obvious over Amidon.

Claims	35 U.S.C. §	References/Basis	Claims Shown Unpatentable	Claims Not Shown Unpatentable
9, 20[13]				
Overall Outcome			1–9, 20	

V. ORDER

In consideration of the foregoing, it is:

ORDERED that claims 1–9 and 20 of the ’454 patent have been shown to be unpatentable;

FURTHER ORDERED that Patent Owner’s Request for Adverse Judgment is *granted*;

FURTHER ORDERED that claims 10–19 shall be *cancelled*;

FURTHER ORDERED that adverse judgment is entered against Patent Owner with respect to claims 10–19 of the ’454 patent pursuant to 37 C.F.R. § 42.73(b); and

FURTHER ORDERED that, because this is a Final Written Decision, parties to this proceeding seeking judicial review of our Decision must comply with the notice and service requirements of 37 C.F.R. § 90.2.

[13] Because we grant Patent Owner’s Request for Adverse Judgment with respect to claims 10–19, we do not reach Petitioner’s challenge of claims 10–19 as obvious over Wong and Gogic.

FOR PETITIONER:

Jonathan Tuminaro
Michael Specht
Jennifer Chagnon
David Haars
STERNE, KESSLER, GOLDSTEIN & FOX PLLC
jtuminar-ptab@sternekessler.com
mspecht-ptab@sternekessler.com
jchagnon-ptab@sternekessler.com
dhaars-ptab@sternekessler.com

FOR PATENT OWNER:

David Hecht
James Zak
HECHT PARTNERS LLP
dhecht@hechtpartners.com
zakx0017@umn.edu