US 20100248595A1

(19) United States

(12) Patent Application Publication

Dinh-Ngoc et al.

(10) Pub. No.: US 2010/0248595 A1

(43) Pub. Date: Sep. 30, 2010

(54) **ABRASIVE TOOL FOR USE AS A CHEMICAL MECHANICAL PLANARIZATION PAD CONDITIONER**

(75) Inventors: **Charles Dinh-Ngoc**, Holliston, MA (US); **Srinivasan Ramanath**, Holden, MA (US); **Eric M. Schulz**, Worcester, MA (US); **Jianhui Wu**, Westborough, MA (US); **Thomas Puthanangady**, Shrewsbury, MA (US); **Ramanujam Vedantham**, Worcester, MA (US); **Taewook Hwang**, Acton, MA (US)

Correspondence Address:
LARSON NEWMAN & ABEL, LLP
5914 WEST COURTYARD DRIVE, SUITE 200
AUSTIN, TX 78730 (US)

(73) Assignees: **SAINT-GOBAIN ABRASIVES, INC.**, Worcester, MA (US); **SAINT-GOBAIN ABRASIFS**, Conflans-Sainte-Honorine (FR)

(21) Appl. No.: **12/651,326**

(22) Filed: **Dec. 31, 2009**

Related U.S. Application Data

(60) Provisional application No. 61/162,893, filed on Mar. 24, 2009, provisional application No. 61/235,980, filed on Aug. 21, 2009.

Publication Classification

(51) **Int. Cl.**
B24B 53/02 (2006.01)
B24B 53/12 (2006.01)

(52) **U.S. Cl.** **451/56**; 451/443

(57) **ABSTRACT**

An abrasive tool including a CMP pad conditioner having a substrate including a first major surface, a second major surface opposite the first major surface, and a side surface extending between the first major surface and the second major, wherein a first layer of abrasive grains is attached to the first major surface and a second layer of abrasive grains is attached to the second major surface. The conditioner further includes a first sealing member extending in a peripheral direction along a portion of the side surface of the substrate.

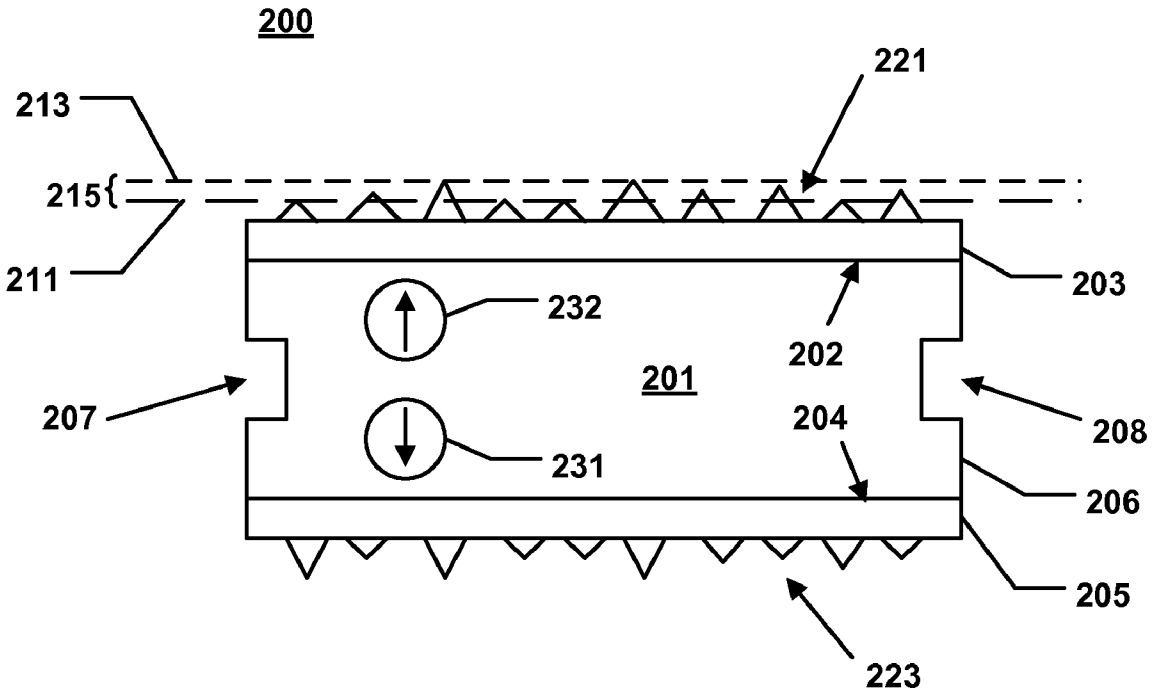

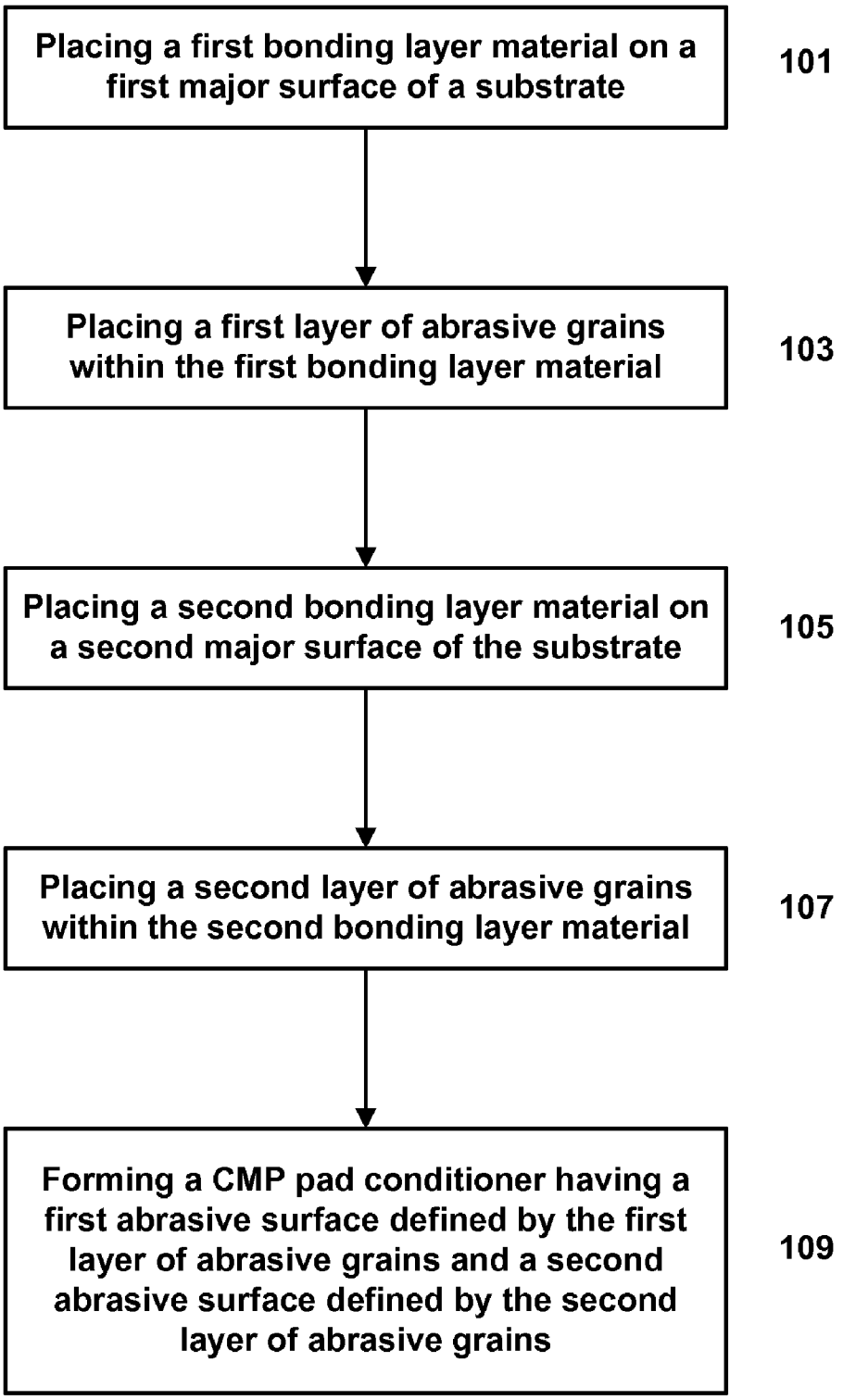
Placing a first bonding layer material on a first major surface of a substrate
101
Placing a first layer of abrasive grains within the first bonding layer material
103
Placing a second bonding layer material on a second major surface of the substrate
105
Placing a second layer of abrasive grains within the second bonding layer material
107
Forming a CMP pad conditioner having a first abrasive surface defined by the first layer of abrasive grains and a second abrasive surface defined by the second layer of abrasive grains
109

FIG. 1

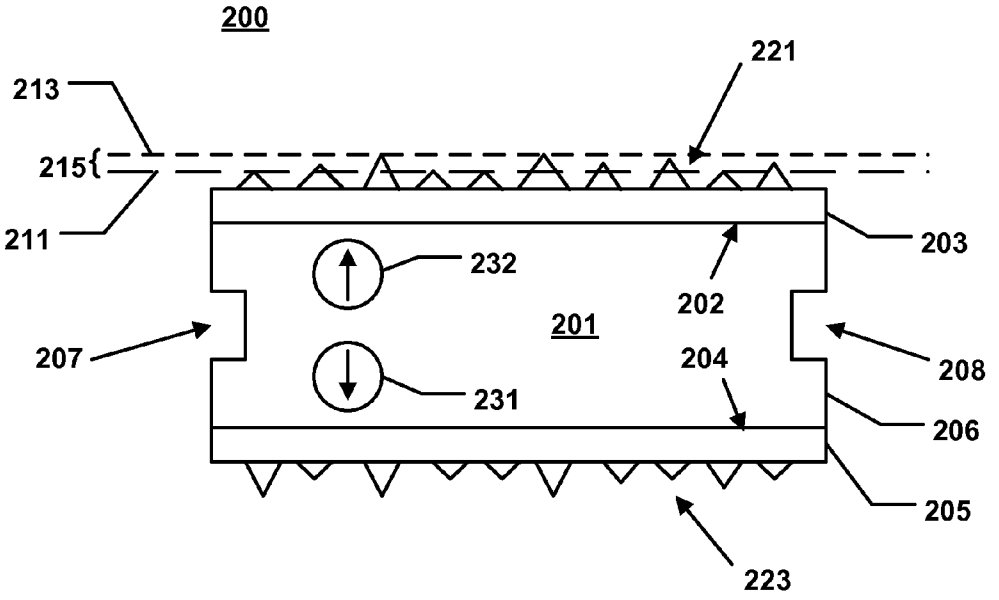
200
221
213
215
211
203
232
202
201
207
204
208
231
206
205
223

FIG. 2A

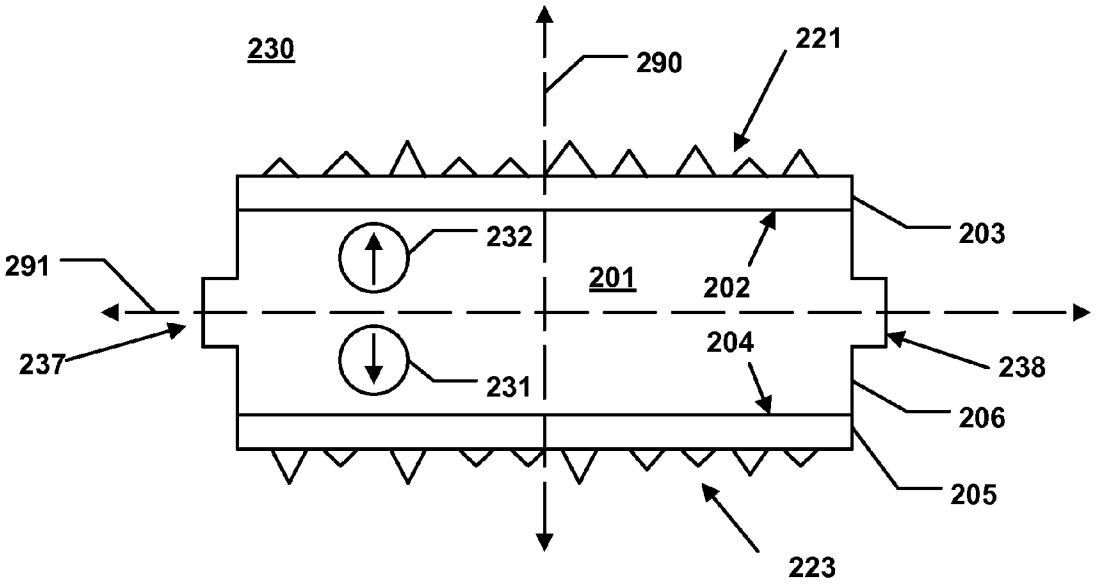
230
290
221
203
232
291
201
202
237
204
238
231
206
205
223

FIG. 2B

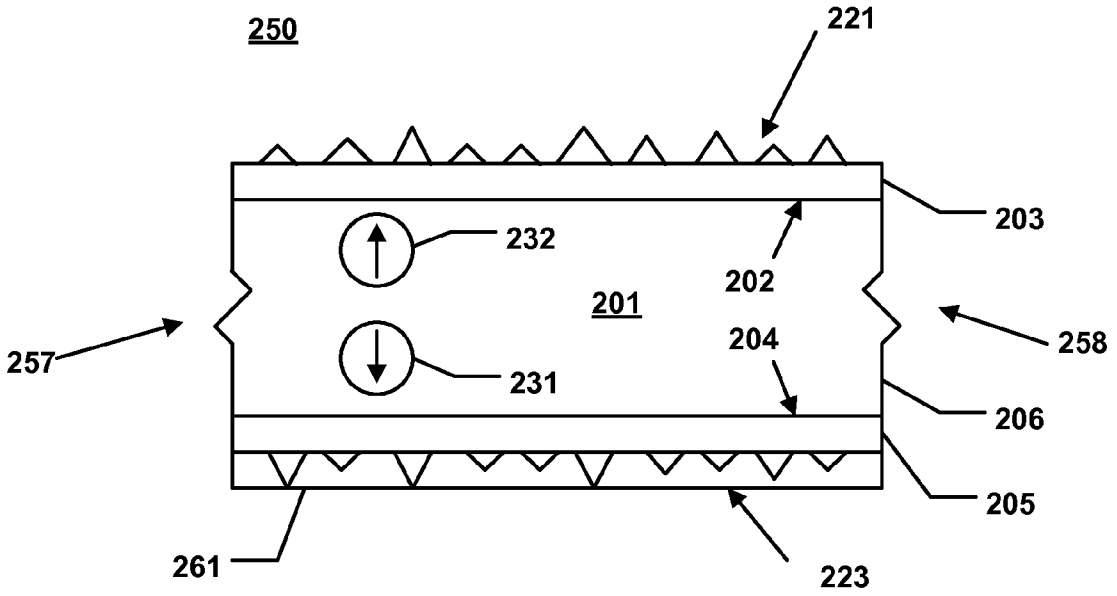
250
221
203
232
202
201
204
258
257
231
206
205
261
223

FIG. 2C

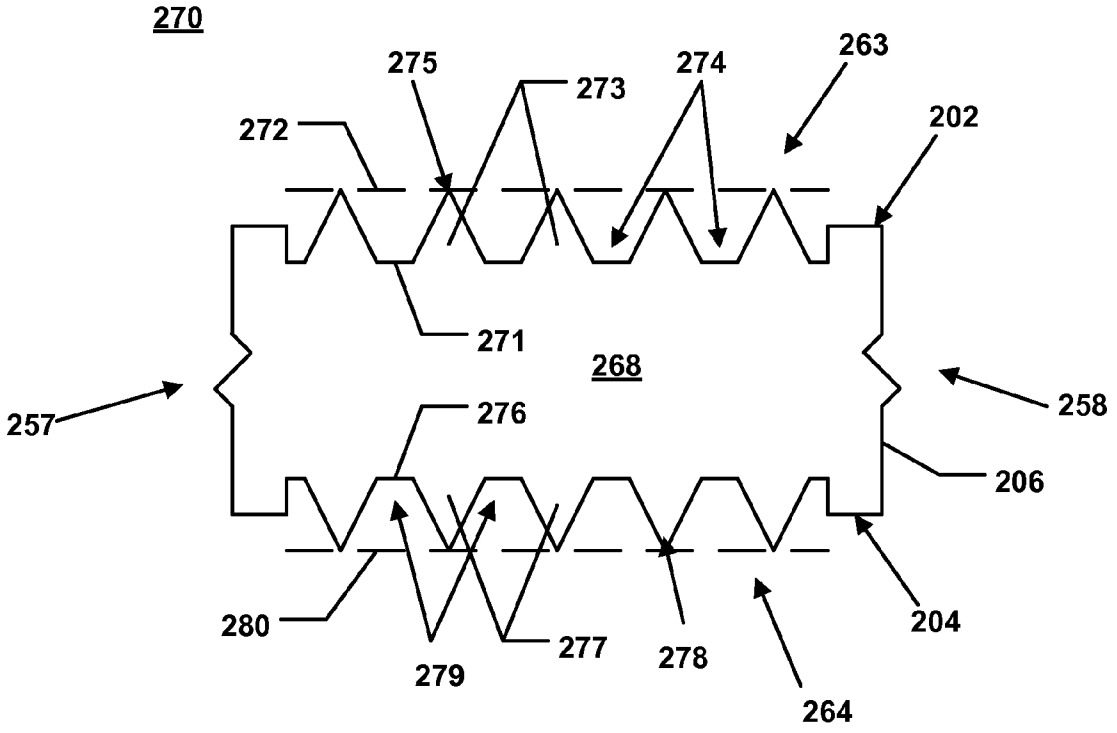
270
275
273
274
263
272
202
271
268
257
276
258
206
280
279
277
278
204
264

FIG. 2D

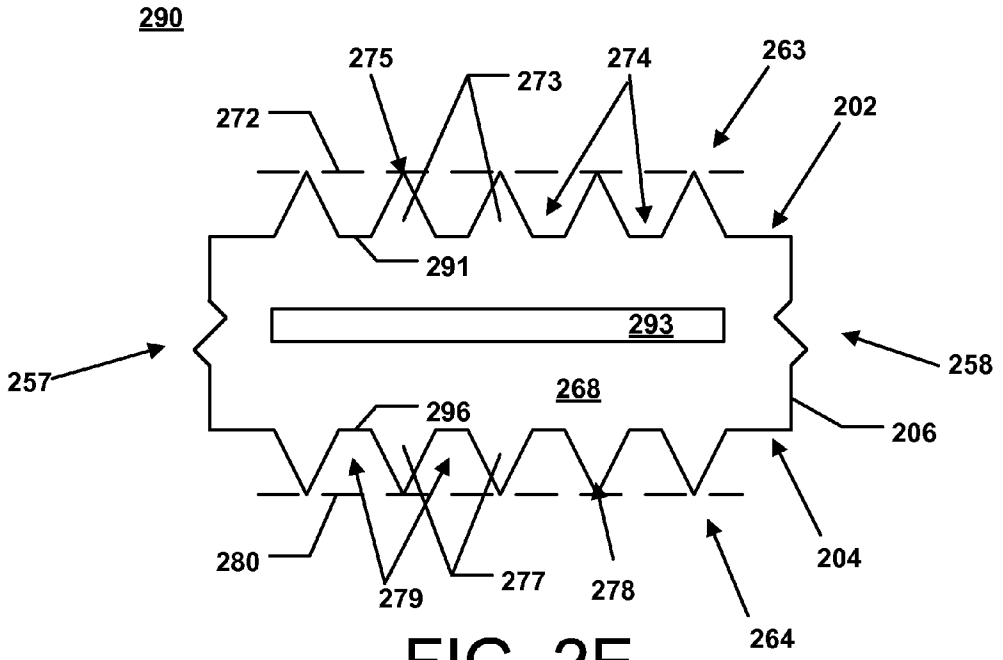
290
275
273
274
263
272
202
291
293
257
258
268
296
206
280
279
277
278
204
264

FIG. 2E

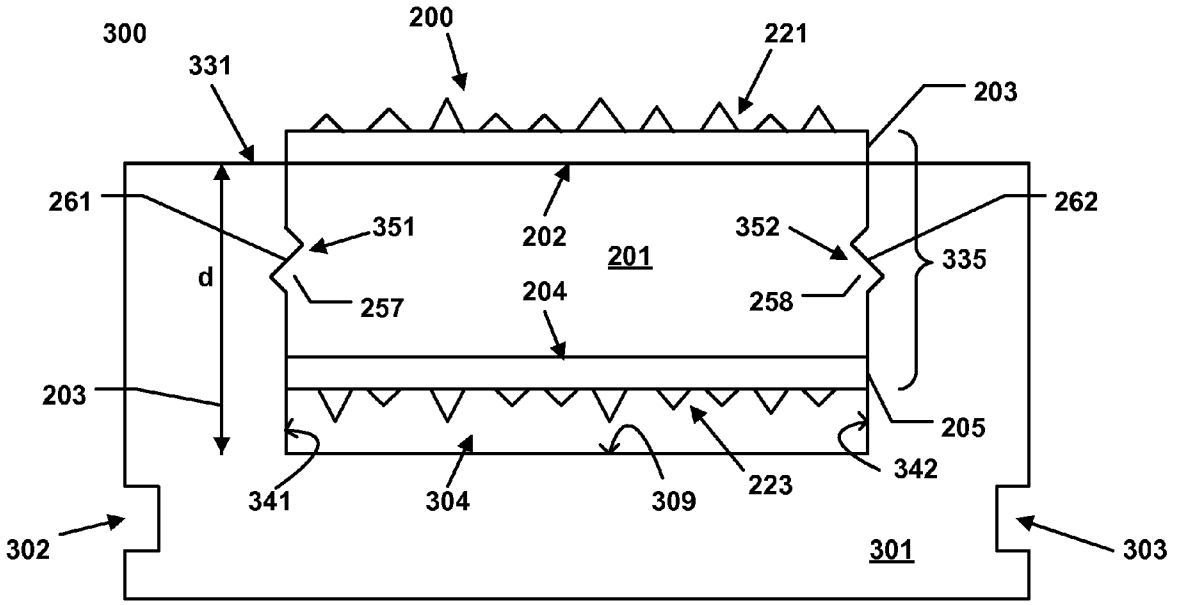
300
200
221
331
203
261
351
202
352
262
201
335
d
257
204
258
203
205
341
304
309
223
342
302
301
303

FIG. 3

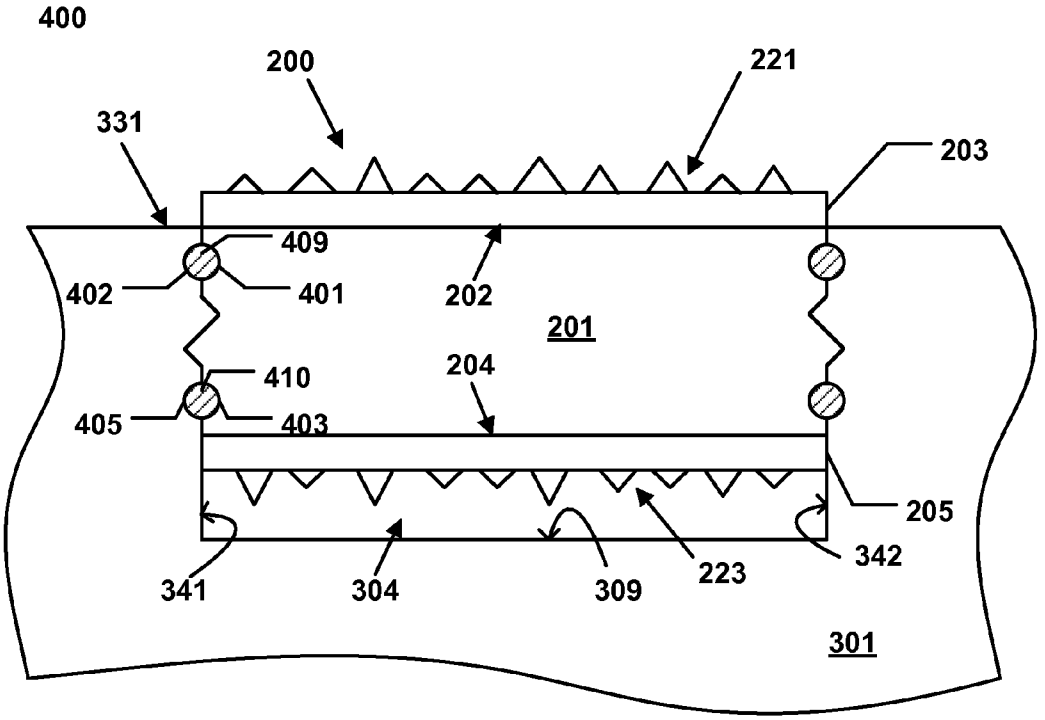
400
200
221
331
203
409
402
401
202
201
410
204
405
403
205
342
341
304
309
223
301

FIG. 4

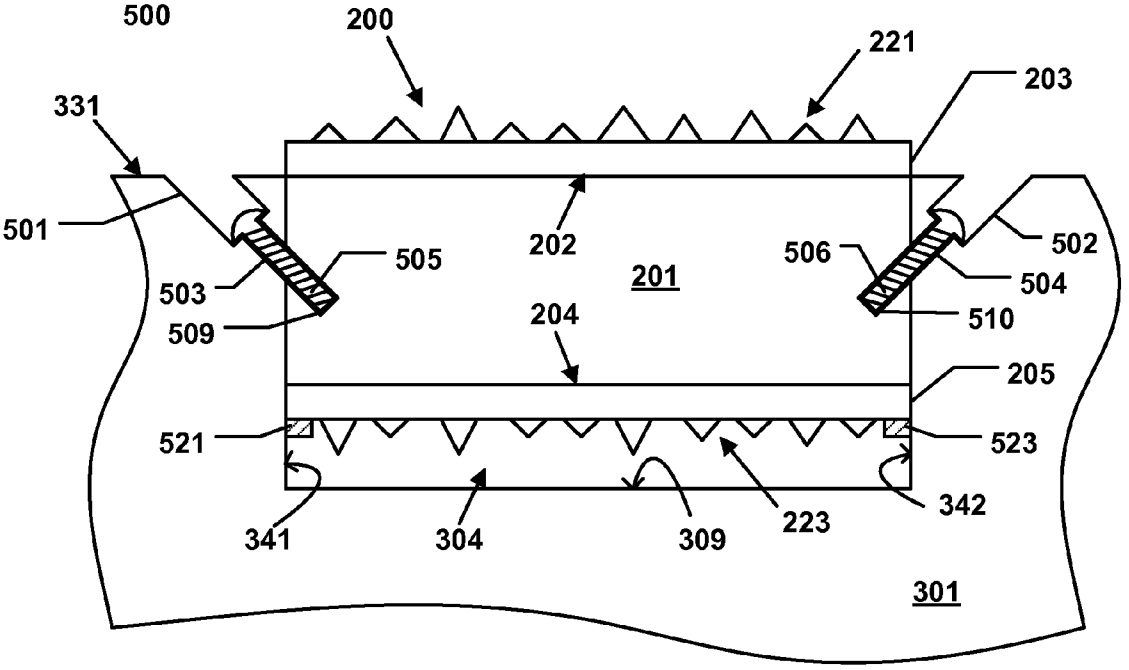
500
200
221
203
331
501
202
505
506
502
503
201
504
509
204
510
205
521
523
342
341
304
309
223
301

FIG. 5

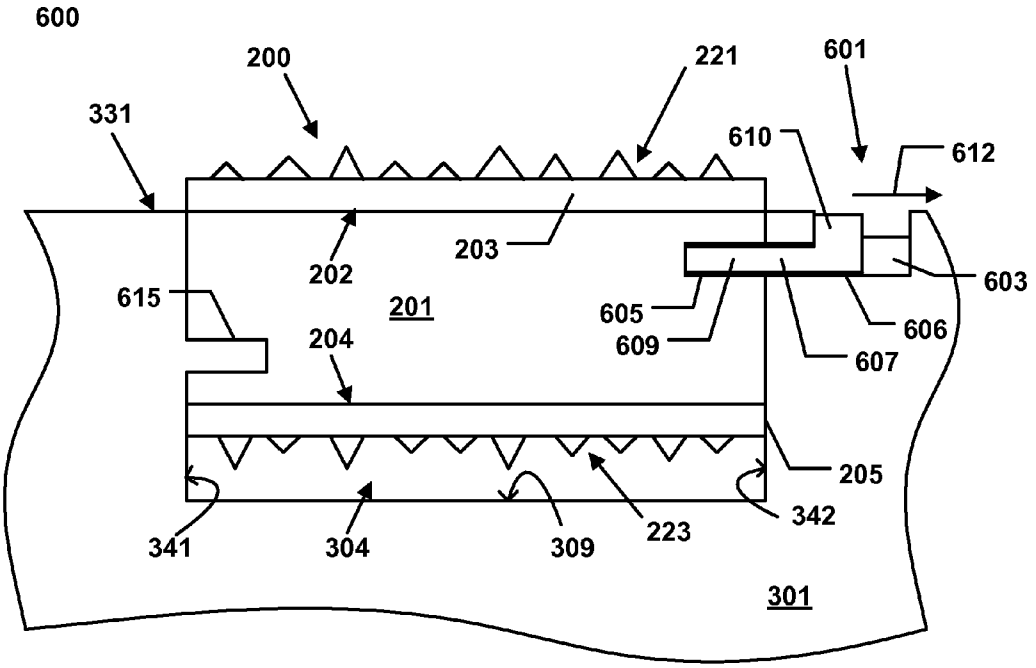
600
200
221
601
331
610
612
203
202
603
615
201
605
606
204
609
607
205
342
341
304
309
223
301

FIG. 6

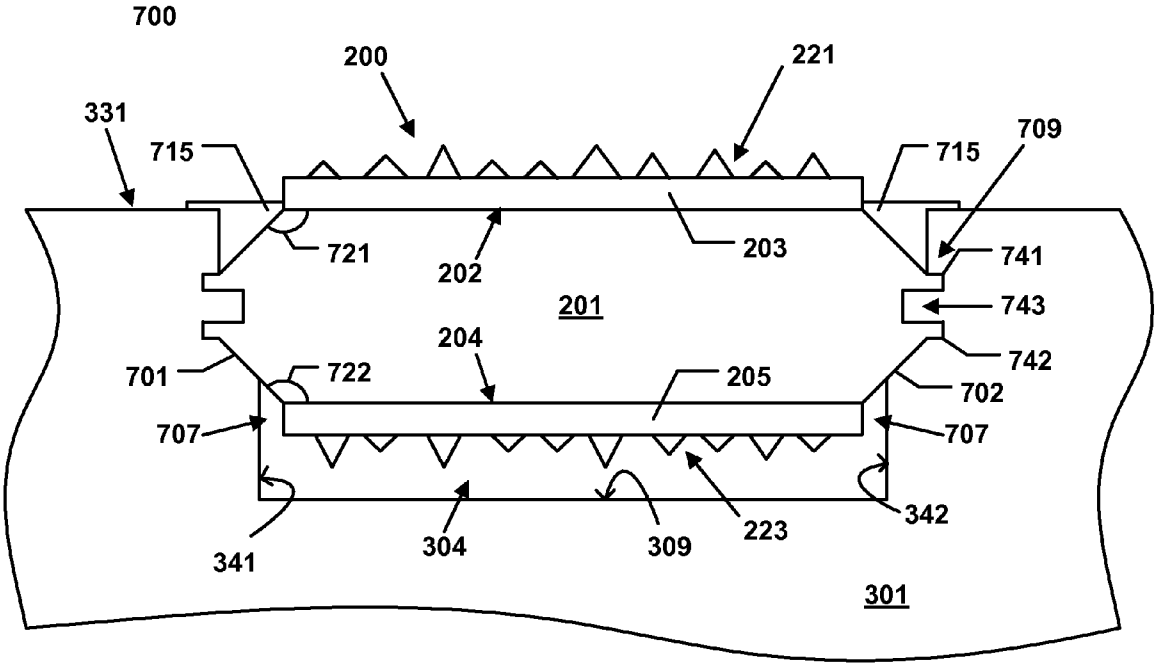
700
200
221
331
715
709
715
721
203
741
202
201
743
204
742
701
722
205
702
707
707
342
341
304
309
223
301

FIG. 7

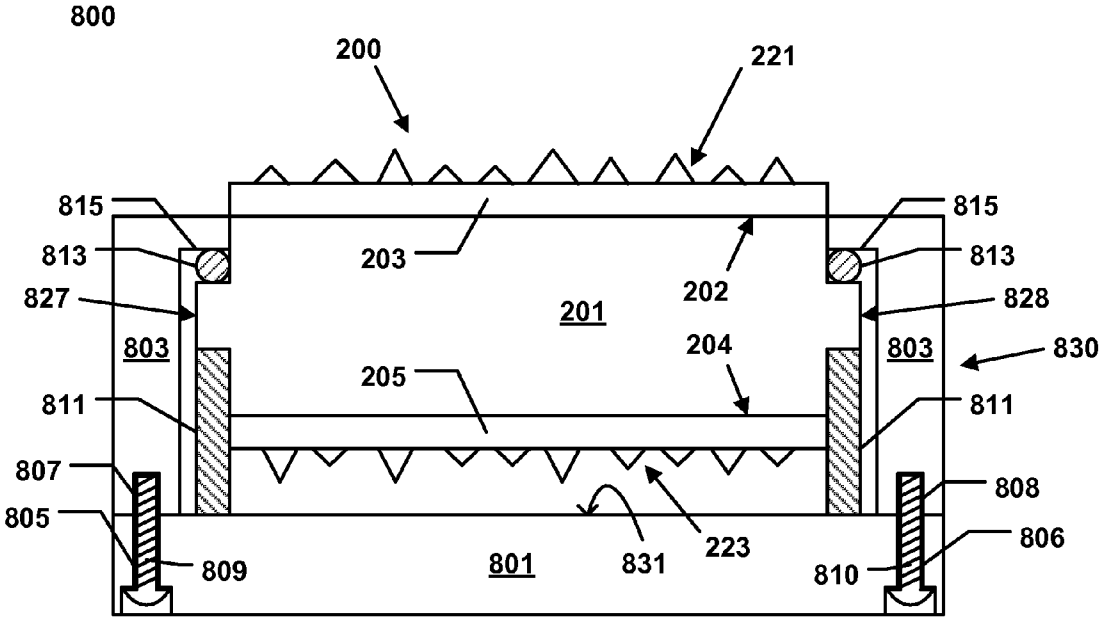
800
200
221
815
815
813
813
203
202
827
828
201
803
803
830
204
205
811
811
807
808
805
806
831
223
809
801
810

FIG. 8

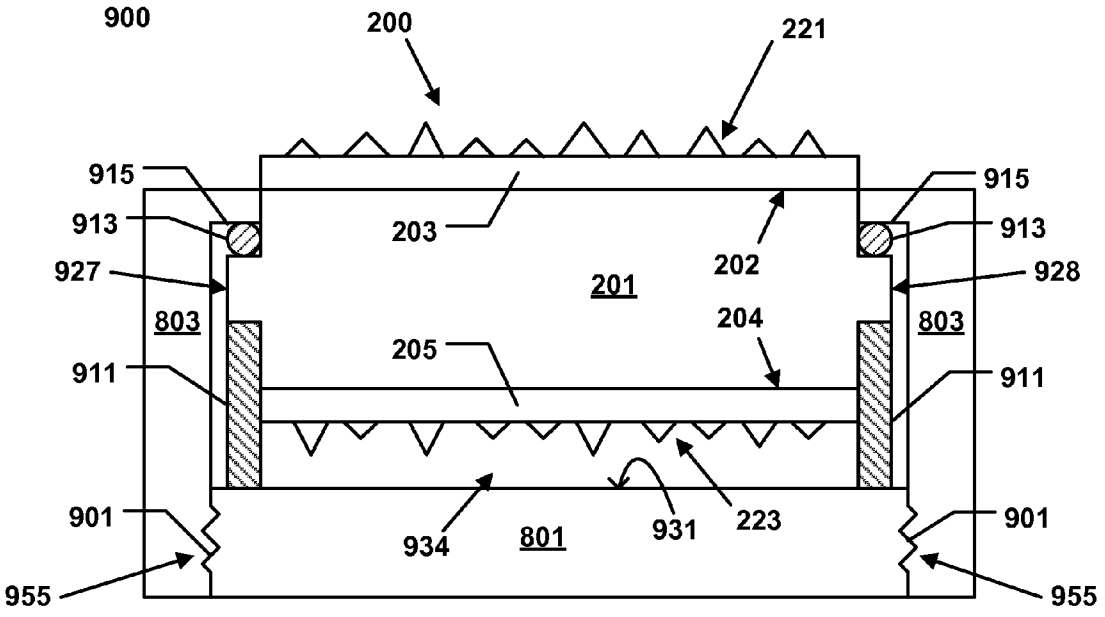
900
200
221
915
915
913
913
203
202
927
928
201
803
803
204
205
911
911
901
901
934
801
931
223
955
955

FIG. 9

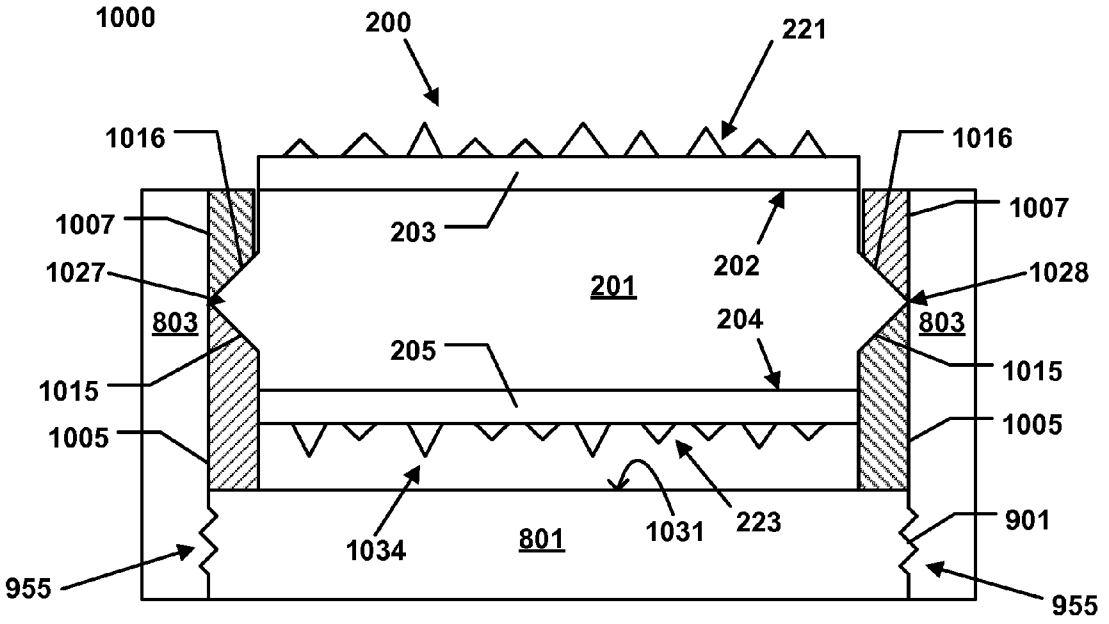
1000
200
221
1016
1016
1007
1007
203
202
1027
1028
201
803
803
204
205
1015
1015
1005
1005
1034
801
1031
223
901
955
955

FIG. 10

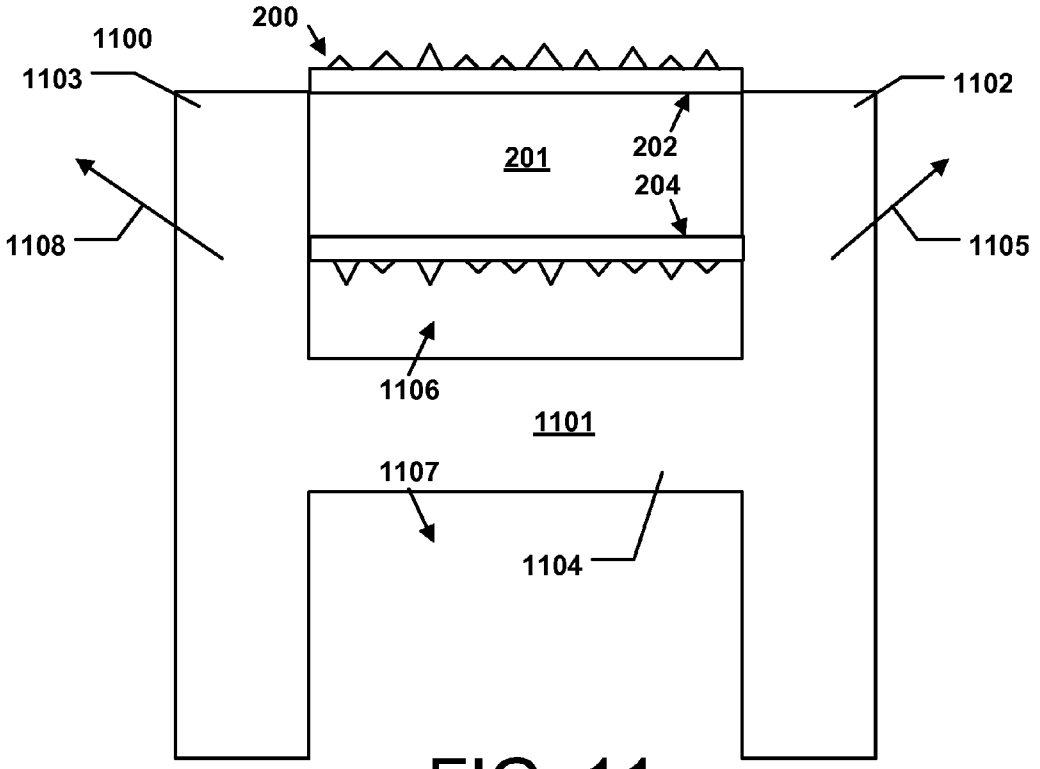
200
1100
1103
1102
201
202
204
1108
1105
1106
1101
1107
1104

FIG. 11

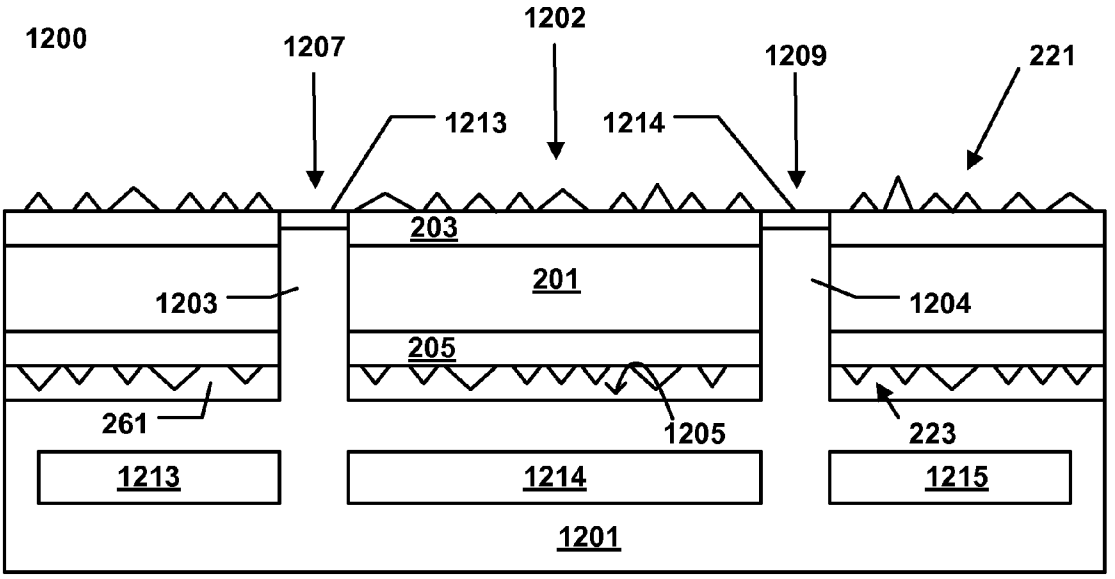

FIG. 12A

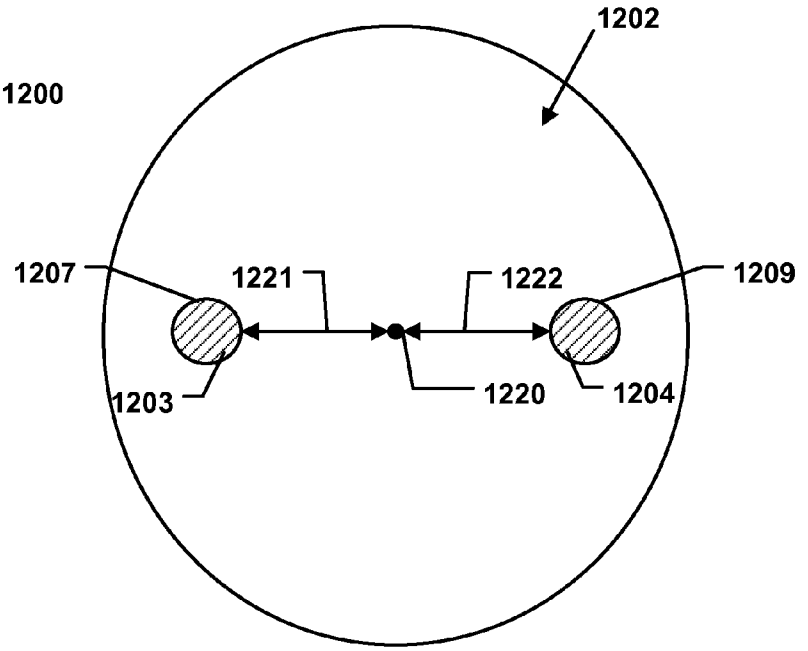

FIG. 12B

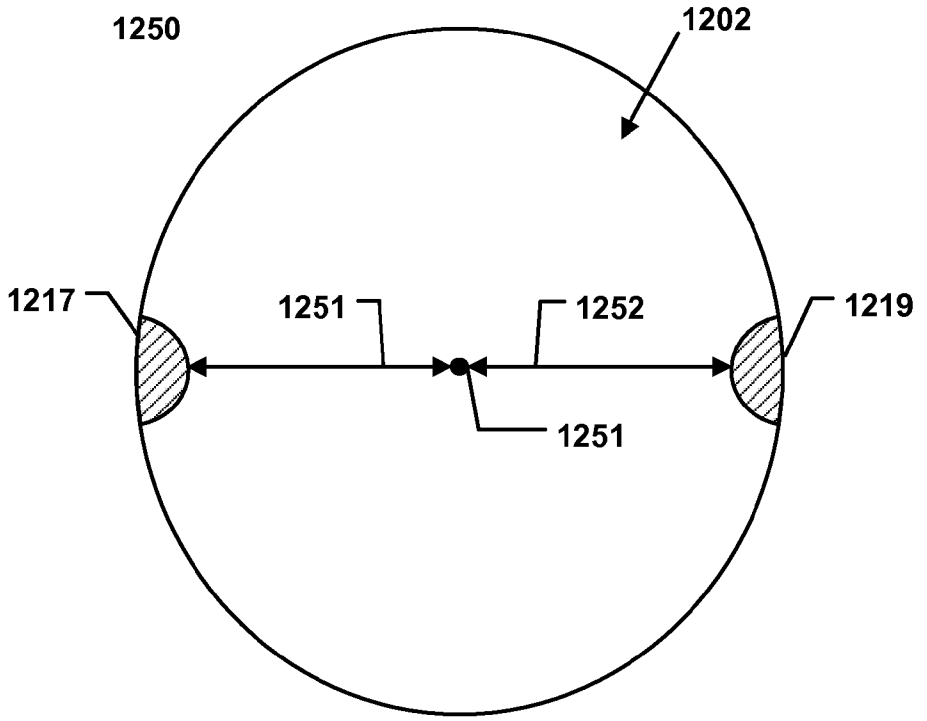

FIG. 12C

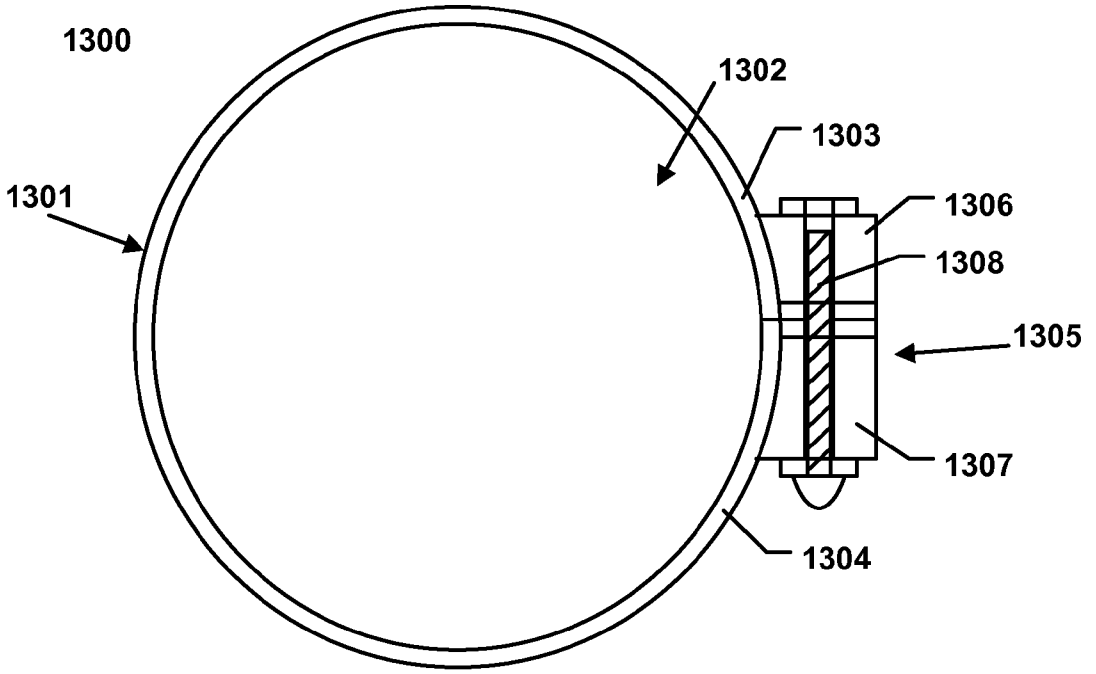

FIG. 13

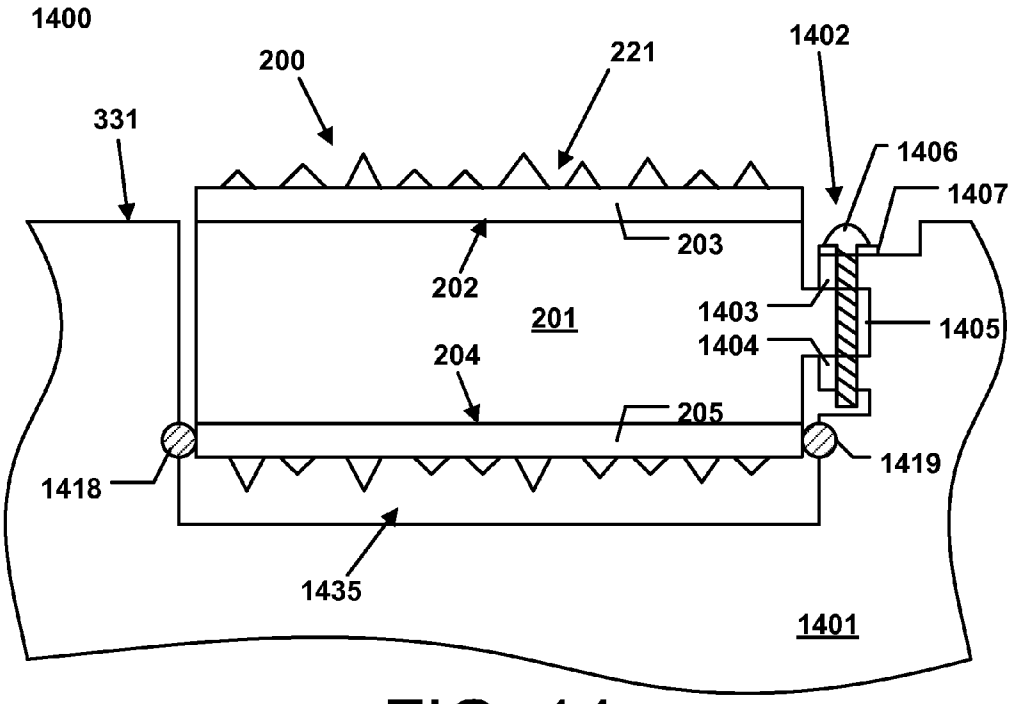
1400
200
221
1402
331
1406
1407
203
202
201
1403
1404
1405
204
205
1418
1419
1435
1401

FIG. 14

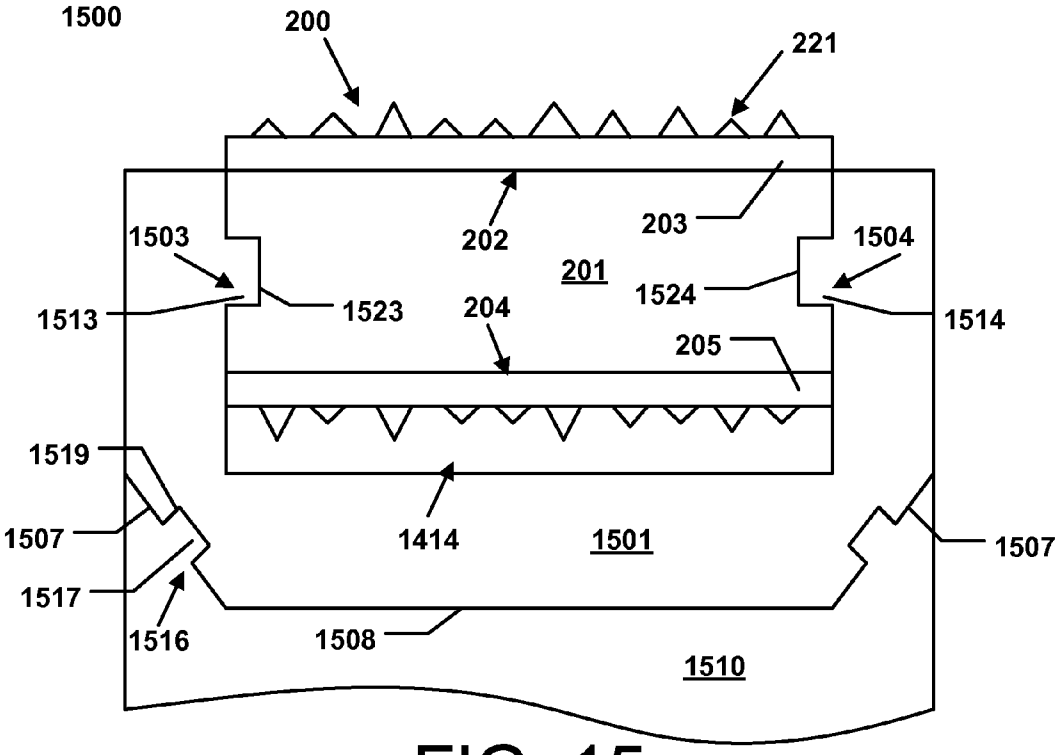
1500
200
221
203
202
1503
1504
201
1524
1513
1523
204
1514
205
1519
1507
1414
1501
1507
1517
1516
1508
1510

FIG. 15

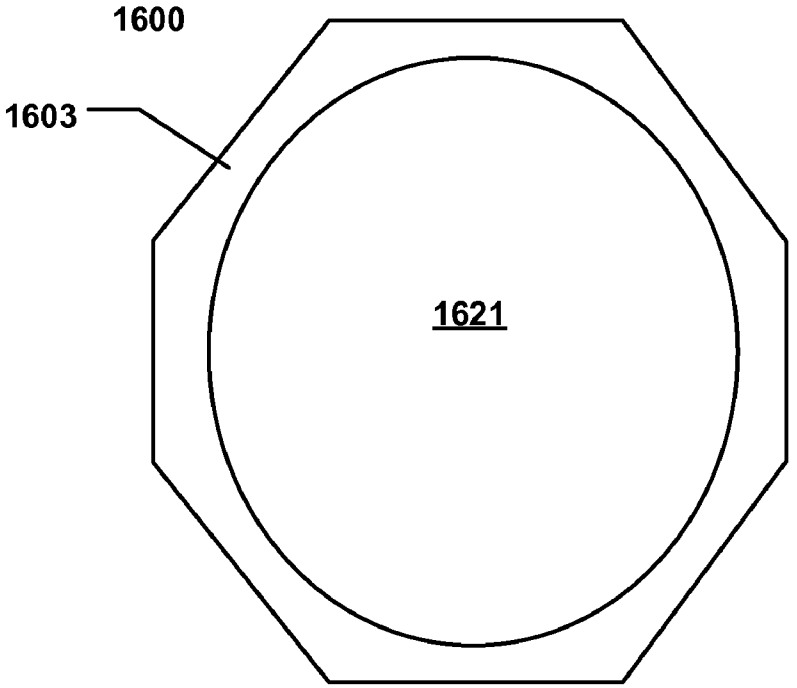

FIG. 16

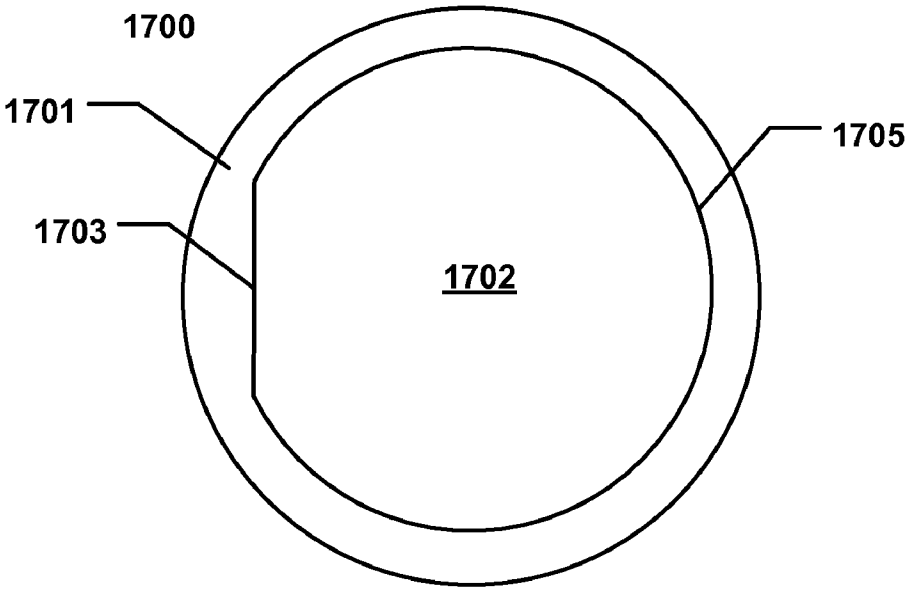

FIG. 17

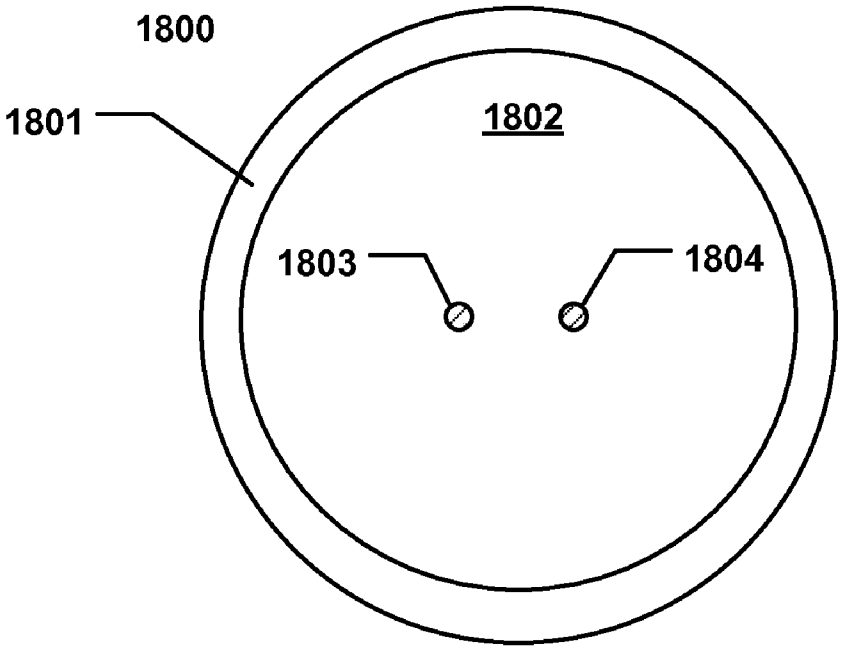
1800
1801
1802
1803
1804

FIG. 18

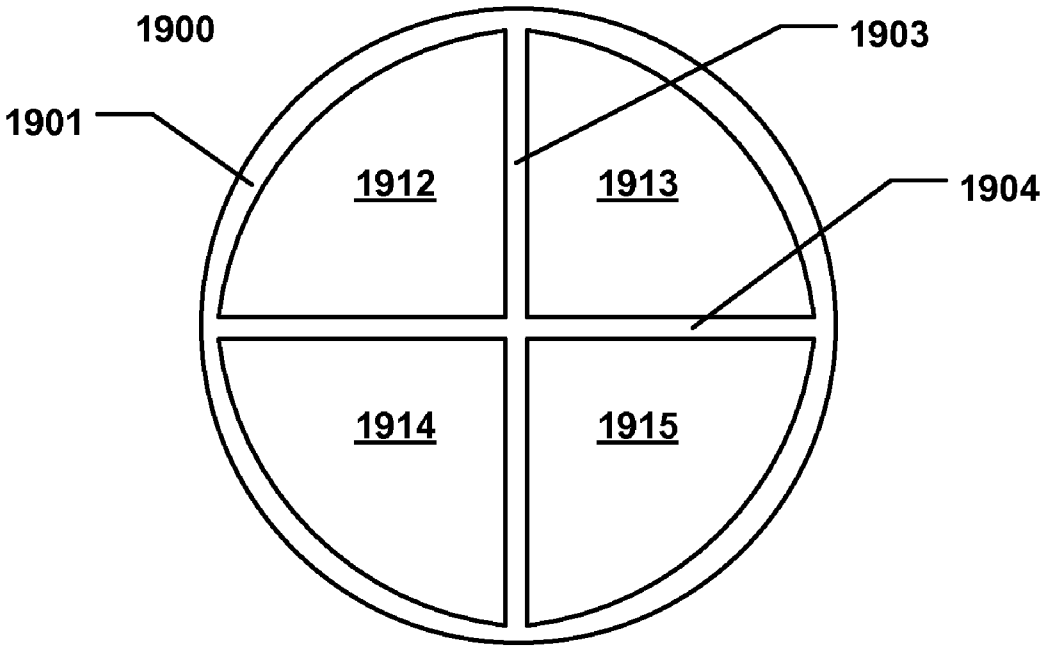
1900
1901
1903
1904
1912
1913
1914
1915

FIG. 19

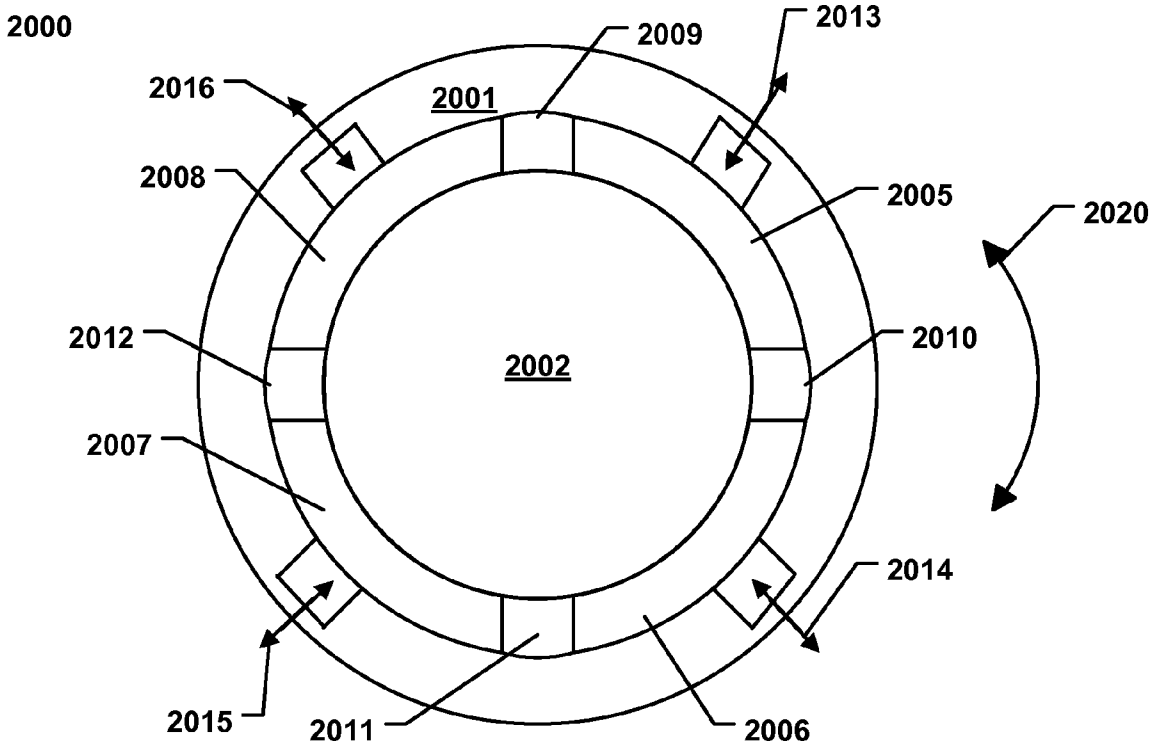
2000
2009
2013
2016
2001
2008
2005
2020
2012
2010
2002
2007
2014
2015
2011
2006

FIG. 20

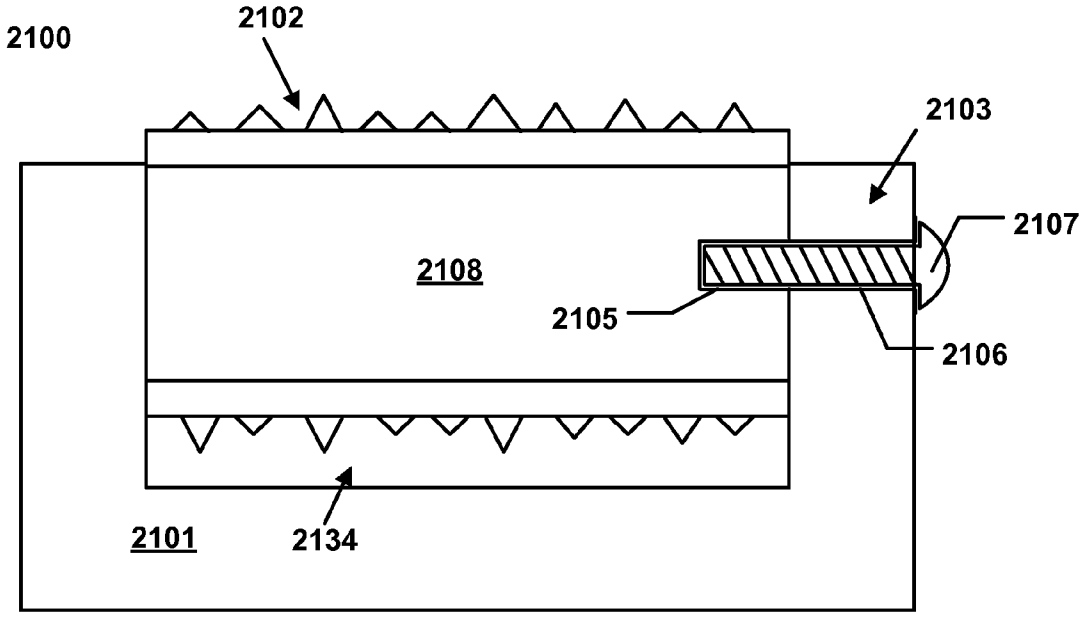
2100
2102
2103
2107
2108
2105
2106
2101
2134

FIG. 21

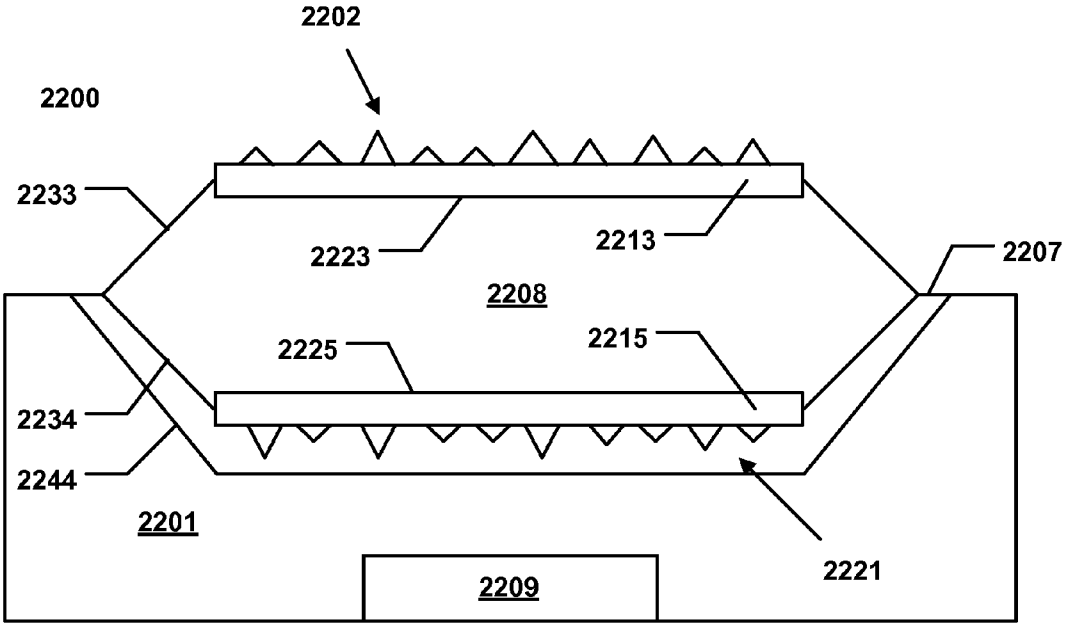
2202
2200
2233
2223
2213
2207
2208
2225
2215
2234
2244
2201
2221
2209

FIG. 22

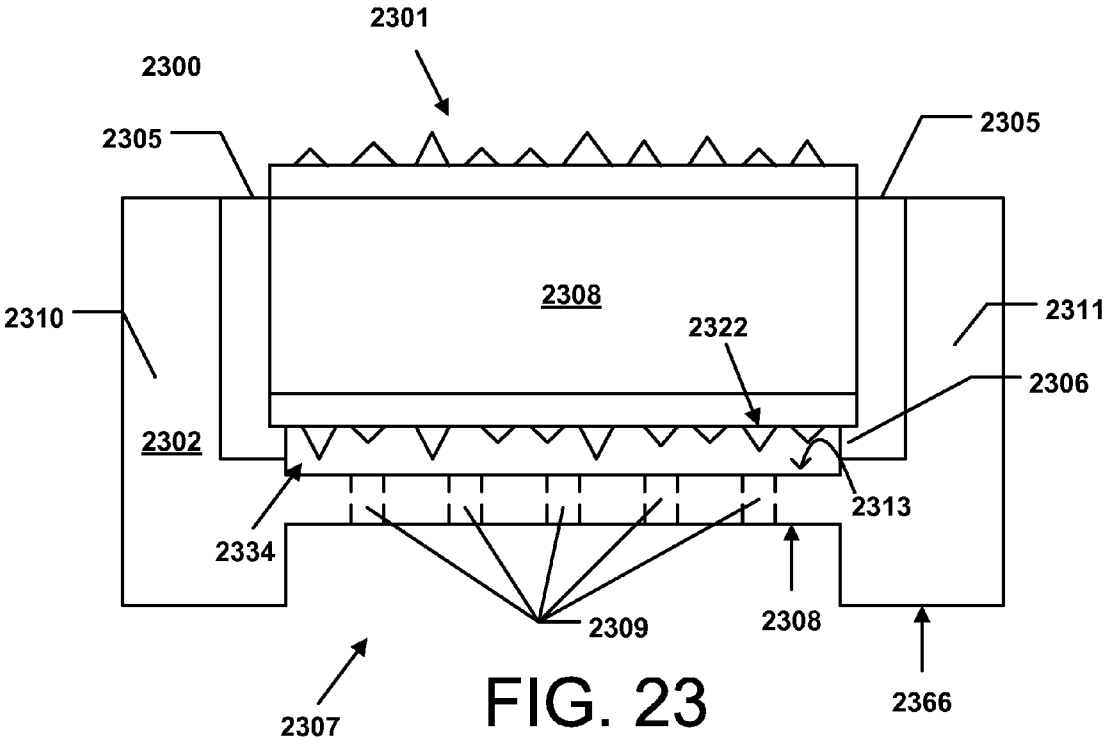
2301
2300
2305
2305
2308
2310
2322
2311
2306
2302
2313
2334
2309
2308
2307
2366

FIG. 23

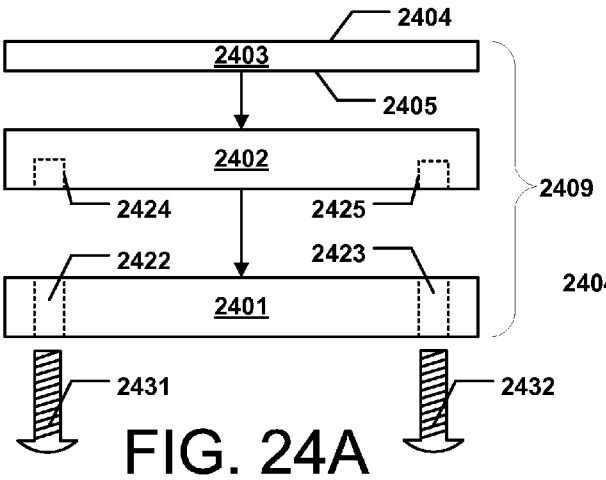

FIG. 24A

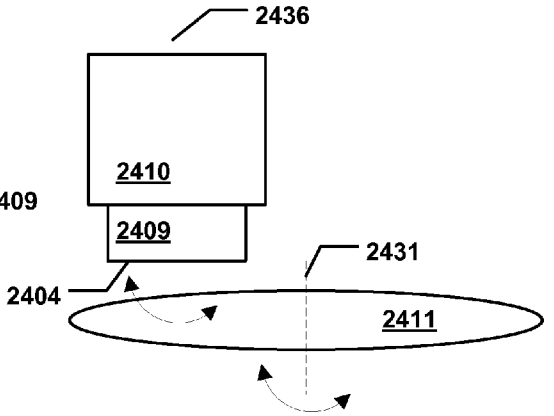

FIG. 24B

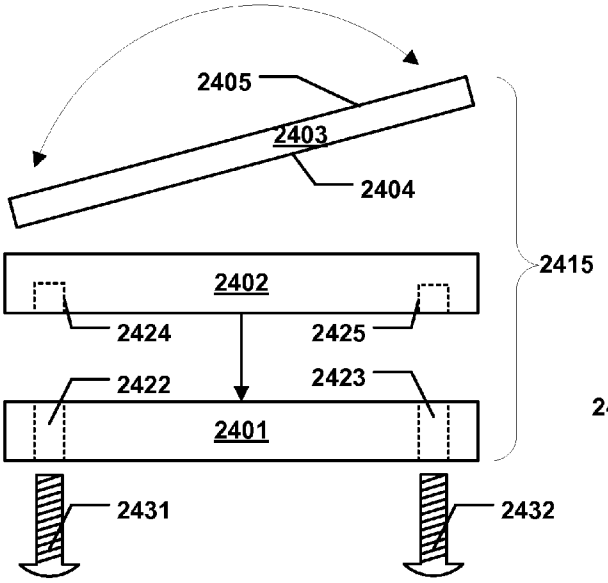

FIG. 24C

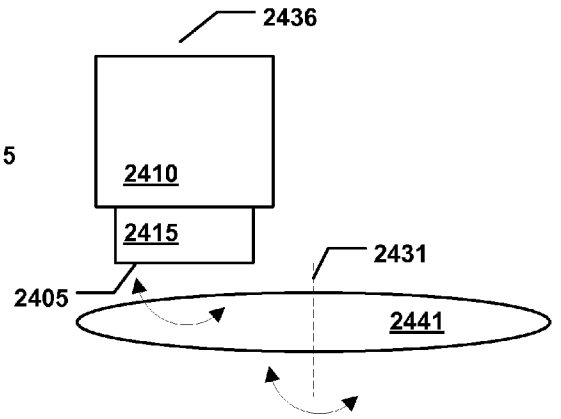

FIG. 24D

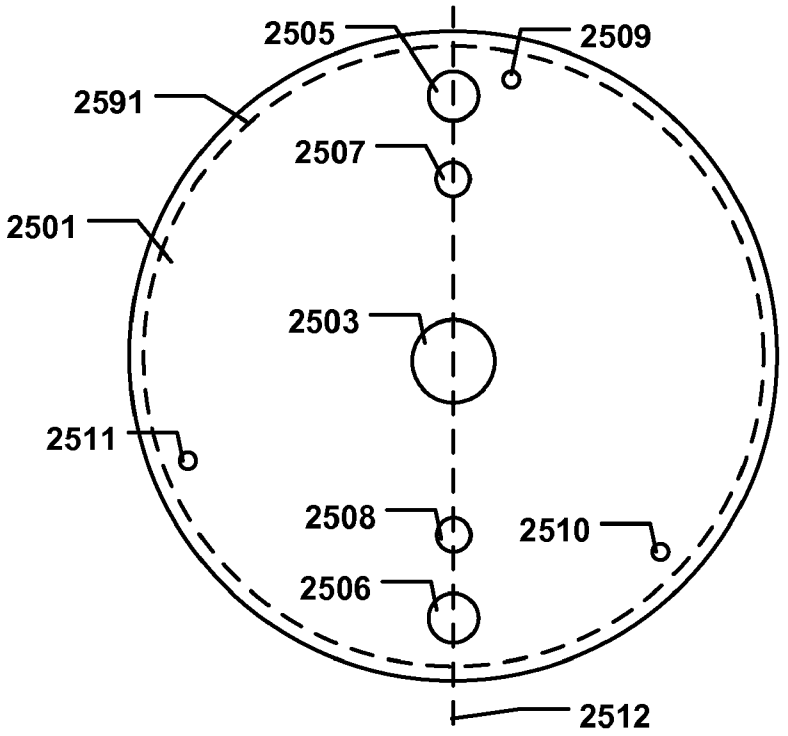

FIG. 25A

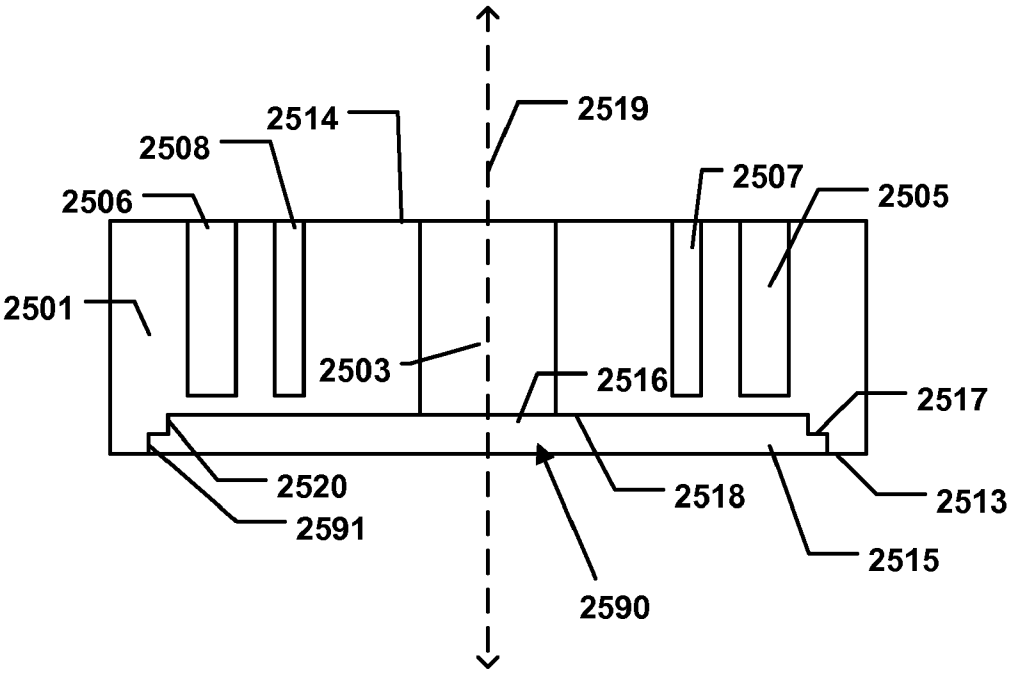

FIG. 25B

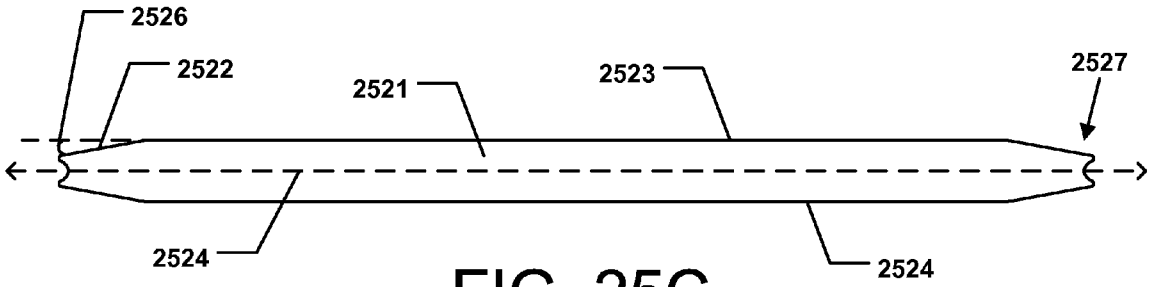

FIG. 25C

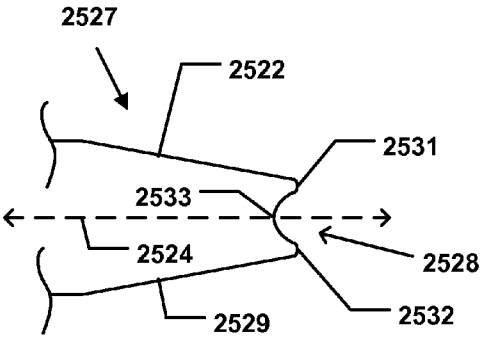

FIG. 25D

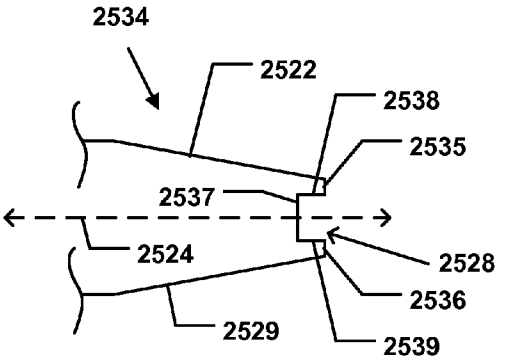

FIG. 25E

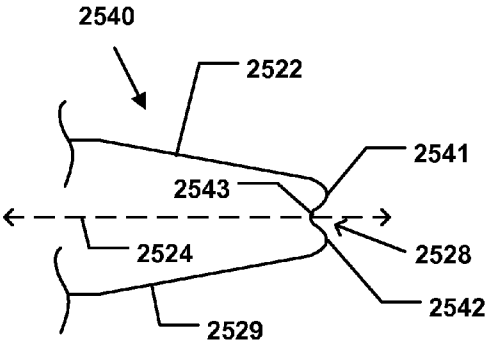

FIG. 25F

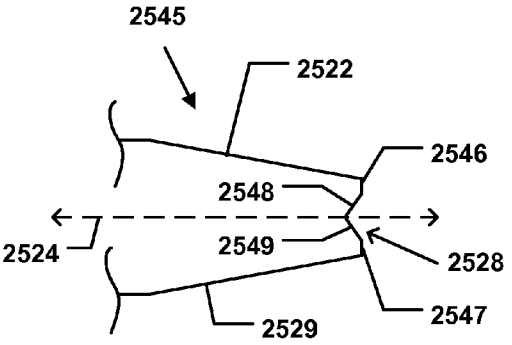

FIG. 25G

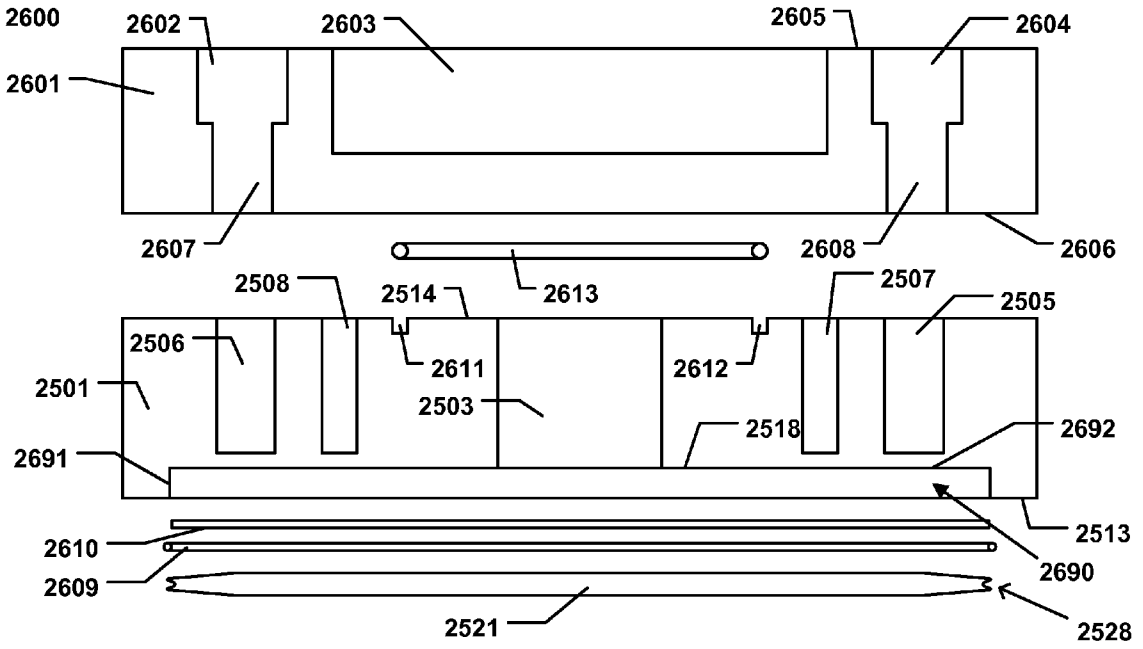

FIG. 26A

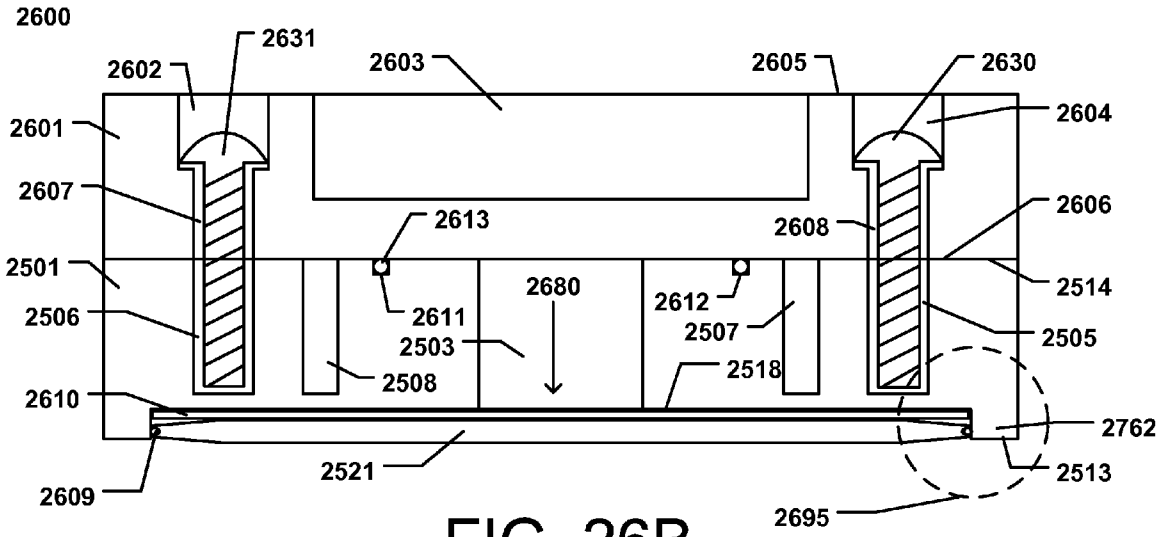

FIG. 26B

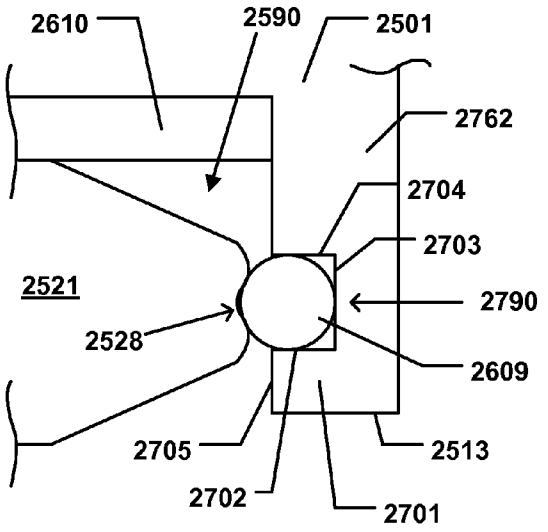

FIG. 27A

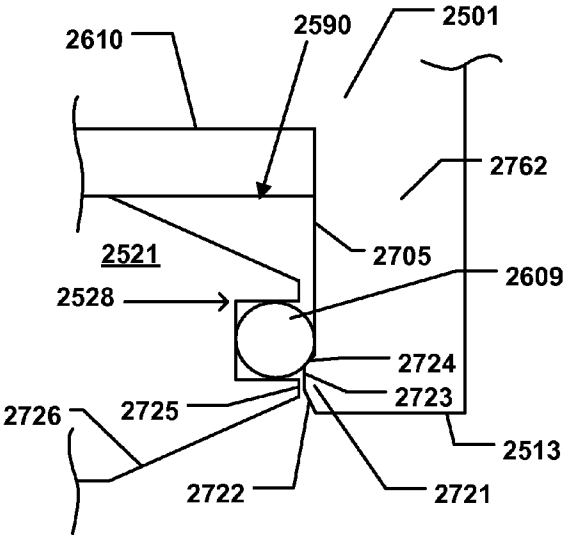

FIG. 27B

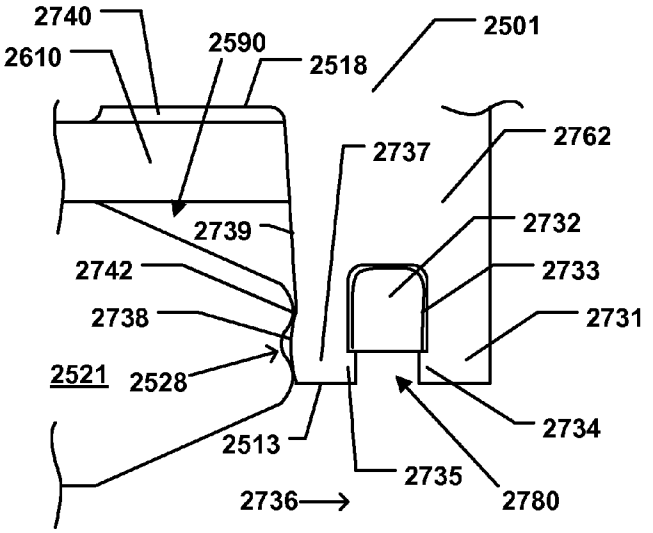

FIG. 27C

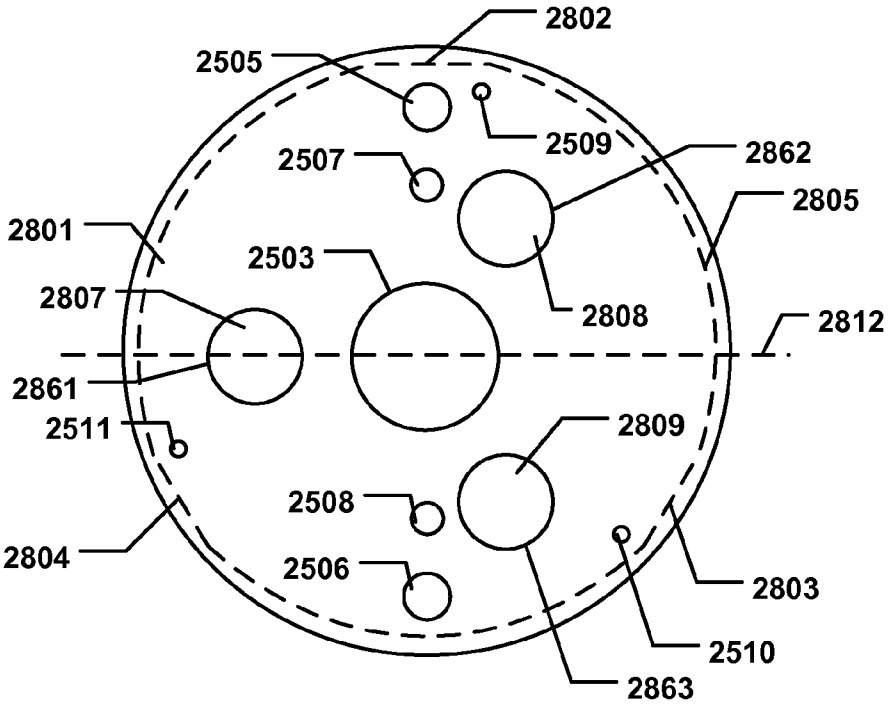

FIG. 28A

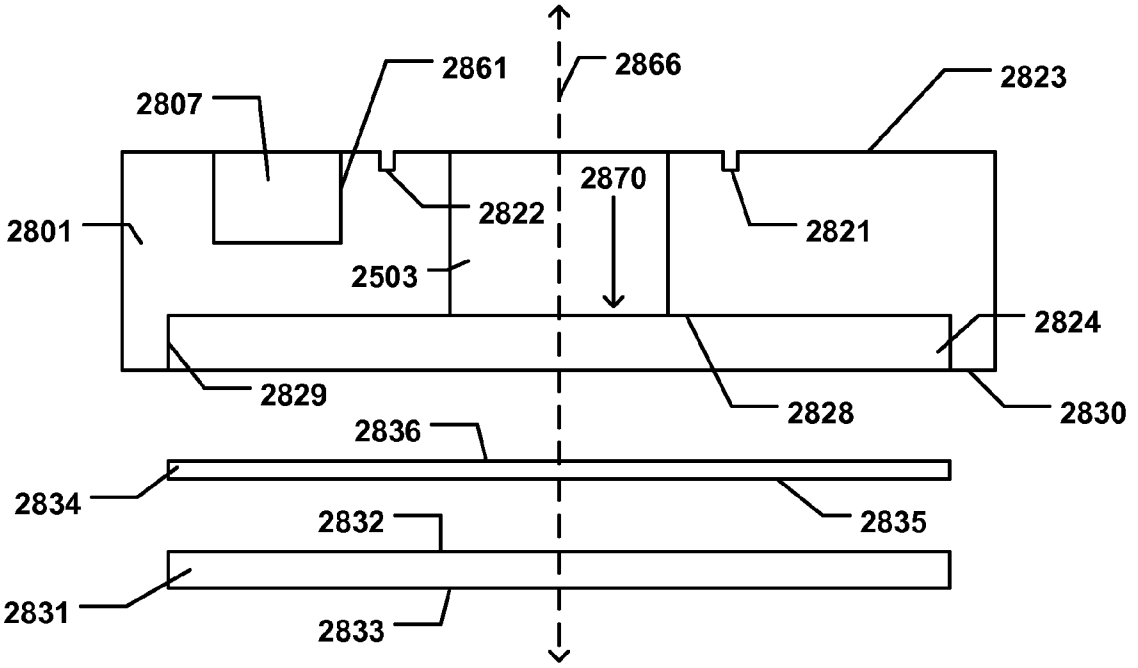

FIG. 28B

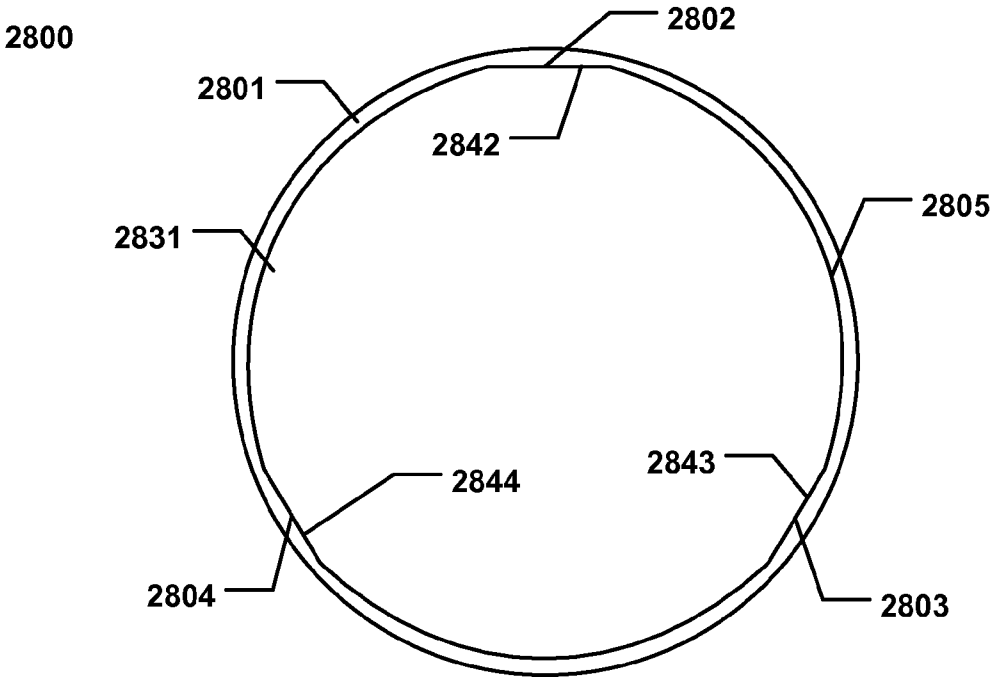

FIG. 28C

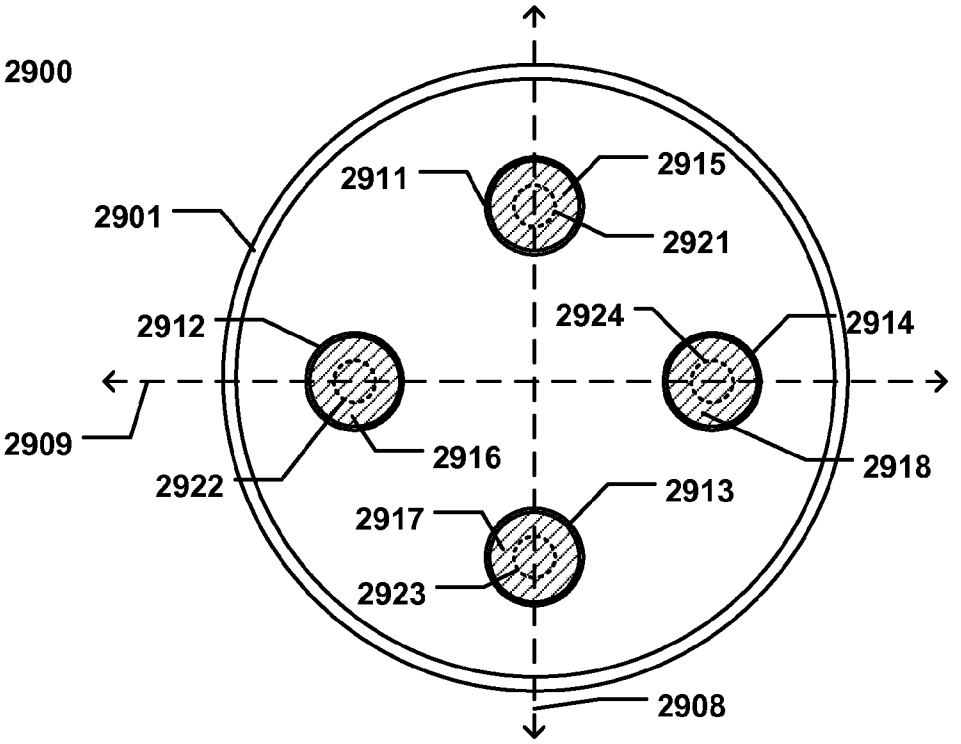

FIG. 29

ABRASIVE TOOL FOR USE AS A CHEMICAL MECHANICAL PLANARIZATION PAD CONDITIONER

CROSS-REFERENCE TO RELATED APPLICATION(S)

[0001] The present application claims priority from (i) U.S. Provisional Patent Application No. 61/162,893, filed Mar. 24, 2009, entitled "Abrasive Tool For Use As A Chemical Mechanical Planarization Pad Conditioner," naming inventors Charles Dinh-Ngoc, Srinivasan Ramanath, Eric M. Schulz, Jianhui Wu, Thomas Puthanangady, Ramanujam Vedantham, and Taewook Hwang, and (ii) U.S. Provisional Patent Application No. 61/235,980, filed Aug. 21, 2009, entitled "Abrasive Tool For Use As A Chemical Mechanical Planarization Pad Conditioner," naming inventors Charles Dinh-Ngoc, Srinivasan Ramanath, Eric M. Schulz, Jianhui Wu, Thomas Puthanangady, Ramanujam Vedantham, and Taewook Hwang, which applications are both incorporated by reference herein in their entirety

BACKGROUND

[0002] 1. Field of the Disclosure

[0003] The following application is directed to an abrasive tool, and more particularly to an abrasive tool for use as a chemical mechanical planarization pad conditioner.

[0004] 2. Description of the Related Art

[0005] In the fabrication of electronic devices, multiple layers of various types of material are deposited including for example conducting, semiconducting, and dielectric materials. Successive deposition or growth and removal of various layers results in a non-planar upper surface. A wafer surface that is not sufficiently planar will result in structures that are poorly defined, with the circuits being nonfunctional or exhibiting less than optimum performance. Chemical mechanical planarization (CMP) is a common technique used to planarize or polish workpieces such as semiconductor wafers.

[0006] During a typical CMP process, a workpiece is placed in contact with a polishing pad and a polishing slurry is provided on the pad to aid in the planarization process. The polishing slurry can include abrasive particles which may interact with the workpiece in an abrasive manner to remove materials, and may also act in a chemical manner to improve the removal of certain portions of the workpiece. The polishing pad is typically much larger than the workpiece, and is generally a polymer material that can include certain features, such as micro-texture suitable for holding the slurry on the surface of the pad.

[0007] During such polishing operations, a pad conditioner is typically employed to move over the surface of the polishing pad to clean the polishing pad and properly condition the surface to hold slurry. Polishing pad conditioning is important to maintaining a desirable polishing surface for consistent polishing performance, since the surface of the polishing pad wears down over time and resulting in smoothing of micro-texture of the pad. Still, the conditioning operation faces certain obstacles, including the presence of polishing debris which can clog the components, chemical corrosion, conditioner geometry irregularity, conditioner over-use, and grain pull-out, which can interfere with conditioning operations and damage the sensitive electronic components being polished.

[0008] Accordingly, the industry continues to demand improved CMP pad conditioners and methods of forming thereof.

SUMMARY

[0009] According to a first aspect an abrasive tool includes a CMP pad conditioner having a substrate including a first major surface and a second major surface opposite the first major surface, a first layer of abrasive grains attached to the first major surface, and a second layer of abrasive grains attached to the second major surface. The abrasive tool can further include a first indicia on the substrate corresponding to the first major surface and identifying a wear status of the first layer of abrasive grains.

[0010] In another aspect, an abrasive tool includes a CMP pad conditioner having a substrate including a first major surface, a second major surface opposite the first major surface, and a side surface extending between the first major surface and the second major. The CMP pad conditioner further includes a first layer of abrasive grains attached to the first major surface, a second layer of abrasive grains attached to the second major surface, and a first sealing member extending in a peripheral direction along a portion of the side surface of the substrate.

[0011] In still other aspects, an abrasive tool for use as a CMP pad conditioner is disclosed that includes a plate, and an abrasive article that includes a substrate having a first major surface and a second major surface opposite the first major surface. The CMP pad conditioner also includes a first layer of abrasive grains attached to the first major surface, a second layer of abrasive grains attached to the second major surface, and an engagement structure configured to engage a portion of the plate and removably couple the abrasive article and the plate.

[0012] Other aspects are directed to an abrasive tool for use as a CMP pad conditioner including a plate and an abrasive article having a substrate including a first major surface and a second major surface opposite the first major surface, a first layer of abrasive grains attached to the first major surface, and a second layer of abrasive grains attached to the second major surface. The abrasive tool is formed such that the plate and abrasive article are removably coupled via a coupling mechanism.

[0013] In accordance with another aspect, an abrasive tool for use as a CMP pad conditioner includes an abrasive article made of a substrate having a first major surface and a second major surface opposite the first major surface, a first layer of abrasive grains attached to the first major surface, and a second layer of abrasive grains attached to the second major surface. In particular, the plate includes a magnet for removably coupling the plate and abrasive article.

[0014] According to still another aspect, an abrasive tool for use as a CMP pad conditioner is disclosed that includes a plate comprising a recess, and an abrasive article removably coupled within the recess. The abrasive article includes a substrate having a first major surface and a first layer of abrasive grains attached to the first major surface, and wherein the first layer of abrasive grains have a flatness of not greater than about 0.02 cm as measured by optical autofocusing technology.

[0015] Other aspects of the present disclosure are directed to a method of forming an abrasive article that includes the steps of placing a first bonding layer material on a first major surface of a substrate, wherein the substrate comprises an

engagement structure configured to removably couple the substrate to a plate, and placing a first layer of abrasive grains within the first bonding layer material. The method further includes placing a second bonding layer material on a second major surface of the substrate, wherein the second major surface is opposite the first major surface, placing a second layer of abrasive grains within the second bonding layer material, and forming a CMP pad conditioner comprising a first abrasive surface defined by the first layer of abrasive grains on the first major surface and a second abrasive surface defined by the second layer of abrasive grains on the second major surface.

[0016] In another aspect an abrasive tool includes a CMP pad conditioner made of a substrate having a first major surface and a second major surface opposite the first major surface, wherein the first major surface includes an abrasive texture including a first upper surface defined by upper portions of a first set of protrusions extending from a lower surface defined by a first set of grooves separating the first set of protrusions. The second major surface includes an abrasive texture including a second upper surface defined by upper portions of a second set of protrusions extending from a lower surface defined by a second set of grooves separating the second set of protrusions.

[0017] According to still another aspect, a method of dressing a CMP pad is disclosed that includes the steps of coupling an abrasive article to a dressing machine, the abrasive article includes a substrate having a first major surface and a second major surface opposite the first major surface, wherein the abrasive article includes a first abrasive surface at the first major surface of the substrate, and a second abrasive surface at the second major surface of the substrate, and wherein the abrasive article is mounted on the dressing machine to expose the first abrasive surface. The method further includes contacting the first abrasive surface to a surface of a first CMP pad and moving the first CMP pad relative to the first abrasive surface to condition the first CMP pad, inverting the abrasive article to expose the second abrasive surface, and contacting the second abrasive surface to a surface of a second CMP pad and moving the second CMP pad relative to the second abrasive surface to condition the second CMP pad.

BRIEF DESCRIPTION OF THE DRAWINGS

[0018] The present disclosure may be better understood, and its numerous features and advantages made apparent to those skilled in the art by referencing the accompanying drawings.

[0019] FIG. **1** includes a flowchart for forming an abrasive article in accordance with an embodiment.

[0020] FIGS. **2**A-**2**E include cross-sectional illustrations of an abrasive article in accordance with an embodiment.

[0021] FIG. **3** includes a cross-sectional illustration of a portion of an abrasive tool in accordance with an embodiment.

[0022] FIG. **4** includes a cross-sectional illustration of a portion of an abrasive tool in accordance with an embodiment.

[0023] FIG. **5** includes a cross-sectional illustration of a portion of an abrasive tool in accordance with an embodiment.

[0024] FIG. **6** includes a cross-sectional illustration of a portion of an abrasive tool in accordance with an embodiment.

[0025] FIG. **7** includes a cross-sectional illustration of a portion of an abrasive tool in accordance with an embodiment.

[0026] FIG. **8** includes a cross-sectional illustration of a portion of an abrasive tool in accordance with an embodiment.

[0027] FIG. **9** includes a cross-sectional illustration of a portion of an abrasive tool in accordance with an embodiment.

[0028] FIG. **10** includes a cross-sectional illustration of a portion of an abrasive tool in accordance with an embodiment.

[0029] FIG. **11** includes a cross-sectional illustration of a portion of an abrasive tool in accordance with an embodiment.

[0030] FIG. **12**A includes a cross-sectional illustration of a portion of an abrasive tool in accordance with an embodiment.

[0031] FIGS. **12**B-**12**C include top views of an abrasive tool in accordance with an embodiment.

[0032] FIG. **13** includes a top view of an abrasive tool in accordance with an embodiment.

[0033] FIG. **14** includes a cross-sectional illustration of a portion of an abrasive tool in accordance with an embodiment.

[0034] FIG. **15** includes a cross-sectional illustration of a portion of an abrasive tool in accordance with an embodiment.

[0035] FIG. **16** includes a top view of an abrasive tool in accordance with an embodiment.

[0036] FIG. **17** includes a top view of an abrasive tool in accordance with an embodiment.

[0037] FIG. **18** includes a top view of an abrasive tool in accordance with an embodiment.

[0038] FIG. **19** includes a top view of an abrasive tool in accordance with an embodiment.

[0039] FIG. **20** includes a top view of an abrasive tool in accordance with an embodiment.

[0040] FIG. **21** includes a cross-sectional illustration of a portion of an abrasive tool in accordance with an embodiment.

[0041] FIG. **22** includes a cross-sectional illustration of a portion of an abrasive tool in accordance with an embodiment.

[0042] FIG. **23** includes a cross-sectional illustration of a portion of an abrasive tool in accordance with an embodiment.

[0043] FIGS. **24**A-**24**D include illustrations of a method of using an abrasive article for conducting a CMP pad conditioning operation in accordance with an embodiment.

[0044] FIG. **25**A includes a top view of a backside of a plate in accordance with an embodiment.

[0045] FIG. **25**B includes a cross-sectional illustration of a portion of the plate of FIG. **25**A in accordance with an embodiment.

[0046] FIG. **25**C includes a cross-sectional illustration of a CMP pad conditioner in accordance with an embodiment.

[0047] FIGS. **25**D-**25**G include cross-sectional illustrations of portions of side regions of a CMP pad conditioner in accordance with embodiments.

[0048] FIG. **26**A includes a cross-sectional illustration of a conditioning system including a plate and CMP pad conditioner in accordance with an embodiment.

[0049] FIG. **26**B includes a cross-sectional illustration of a conditioning system including a plate and CMP pad conditioner in accordance with an embodiment.

[0050] FIGS. **27**A-**27**C include cross-sectional illustrations of a portion of a CMP pad conditioner and plate in accordance with an embodiment.

[0051] FIG. **28**A includes a top view of a plate in accordance with an embodiment.

[0052] FIG. **28**B includes a cross-sectional illustration of the plate of FIG. **28**A in accordance with an embodiment.

[0053] FIG. **28**C includes a top view of a plate and CMP pad conditioner in accordance with an embodiment.

[0054] FIG. **29** includes a top view illustration of an abrasive tool in accordance with an embodiment.

[0055] The use of the same reference symbols in different drawings indicates similar or identical items.

DETAILED DESCRIPTION

[0056] The following is directed to an abrasive tool for use as a chemical mechanical planarization (CMP) pad conditioner, also referred to as a dresser. The abrasive tool includes a plurality of features including an abrasive article having two (first and second) abrading surfaces and coupling mechanisms for removably coupling the abrasive article with a fixture or plate. The abrasive tool can include different types of engagement structures facilitating removal and reversing of the abrasive tool such that both first and second abrading surfaces are useable.

[0057] FIG. **1** includes a flowchart demonstrating a method of forming an abrasive tool in accordance with an embodiment. As illustrated, the process can be initiated at step **101** by placing a first bonding layer material on a first major surface of a substrate.

[0058] Generally, the substrate is made of a material suitable for withstanding the rigors of abrasive processing. For example, the substrate can be a material having an elastic modulus of at least 2E3MPa. In other embodiments, the substrate may be made of a material having a greater elastic modulus, such as on the order of at least about 5E3MPa, such as at least about 1E4MPa, or even at least about 1E5MPa. In particular instances, the substrate material has an elastic modulus within a range between about 2E3MPa and about 4E5.

[0059] For example, the substrate can include materials such as metals, metal alloys, ceramics, polymers, or a combination thereof. In accordance with one particular embodiment, the substrate is made of a metal alloy, such as steel. For some embodiments, as will be appreciated herein, the substrate can include a material that is magnetized or capable of being magnetized.

[0060] The substrate can have a certain shape, including for example, a generally disk-like shape having a first major surface and a second major surface that are opposite each other and substantially parallel with each other. The first major surface and second major surface can be connected by a side surface that defines the height of the substrate. While the substrate can have a disk-like shape with a circular contour, such that the shape of the substrate is cylindrical, other shapes are contemplated. For example, the substrate can have a rectangular or polygonal shape, such that the substrate has substantially planar sides that may be parallel to each other. Notably, the substrate can include other features (e.g., engagement structures) that will be described in more detail herein.

[0061] Placement of a first bonding layer material on the first major surface of the substrate can include the application of a layer of material, which may be applied to the substrate surface in the form of a film, foil, tape, or the like. Typically, the application of the bonding layer material is in a manner such that the bonding layer has a sufficient thickness to contain abrasive grains therein and form a homogeneous bonding layer material during processing. For example, in one embodiment, the bonding layer material can include a metal or metal alloy. Particularly useful metals can include transition metals. For example, the bonding layer material can be a braze material that includes transition metals such as nickel, chromium, titanium, tin, gold, palladium, silver, and a combination thereof.

[0062] In still other embodiments, the first bonding layer material can be a polymer material. Particularly suitable polymer bonding layer materials can include thermoplastics and thermosets, polyamides, polyimides, polyesters, polyethers, fluoropolymers, and a combination thereof. For example, particularly suitable polymer materials for use in the first bonding layer can include epoxies, acrylics, and a combination thereof. Certain bonding layer materials can also incorporate phenol formaldehyde.

[0063] The first bonding layer material can include fillers, which may improve the mechanical characteristics of the bond material making the bond material more durable. Additionally, filler particles can be used to match the coefficient of thermal expansion of braze-filler combination to that of braze-abrasive combination to inhibit out-of-flatness. Likewise, such inert fillers can be used to prevent sticking of braze to the plate or refractory on which the unfinished tool rests during thermal processing, so as to inhibit out-of-flatness. In addition, such inert fillers may improve wear resistance and can operate as an abrasive, if so desired.

[0064] After placing a first bonding layer material on a first major surface at step **101**, the process continues at step **103** by placing a first layer of abrasive grains within the first bonding layer material. Various methods may be used for placement of the abrasive grains within the bonding layer material. For example, the abrasive grains may be placed within the bonding layer in a random arrangement having no short range or long range order. Alternatively, the placement of the abrasive grains may be completed in a manner such that the grains have a pattern, and even arranged in a pattern having long range order, such as an array (e.g., face centered cubic pattern, cubic pattern, hexagonal pattern, rhombic pattern, spiral pattern, random pattern, and combinations of such patterns). In particular instances, the abrasive grains may be placed at particular locations within the bonding layer such that they are arranged in a self-avoiding random distribution (i.e., a SARD™ pattern), which is particularly suitable for conditioning CMP pads.

[0065] The abrasive grains may be particularly hard materials, such that the abrasive grains can have a Vickers hardness of at least about 1500 kg/mm^2. In particular instances, the abrasive grains can include materials such as oxides, borides, nitrides, carbides, carbon-based structures (including man-made carbon-based materials such as fullerenes), and a combination thereof. In some instances, superabrasive materials such as cubic boron nitride or diamond can be used as the abrasive grains.

[0066] The abrasive grains can have an average grit size suitable for conditioning pads in CMP processing. For such applications, the average grit size can be less than about 250

microns. However, in other instances, smaller abrasive grains may be used such that the average grit size is not greater than about 200 microns, not greater than about 100 microns, or even not greater than about 50 microns. In particular instances, the abrasive grains have an average grit size within a range between about 1 micron and about 250 microns, such as within a range between about 1 micron and about 100 microns.

[0067] After placing the first layer of abrasive grains within the first bonding layer material at step **103**, the process can continue at step **105** by placing a second bonding layer material on a second major surface of the substrate. As described above, the substrates can have a disk like or cylindrical shape such that the first major surface and second major surface are opposite to and substantially parallel with each other. The first and second major surfaces can be spaced apart from each other and connected to each other by the side surface. Placement of the second bonding layer material can include processes that are similar to, or the same as, the placement of the first bonding layer material on the first major surface. In particular processes, the placement of the second bonding layer may include suspension of the substrate such that the completed first bonding layer material and the first layer of abrasive grains are not in contact with any surfaces. Suspension of the substrate while forming the second bonding layer avoids a change in the placement or orientation of the first layer of abrasive grains, or even dulling of the first layer of abrasive grains. The substrate may be suspended using mechanical means, pressurized means, or the like.

[0068] In accordance with one embodiment, the second bonding layer material can be the same bonding layer material as the first bonding layer material. Still, in alternative designs, it may be suitable that the second bonding layer material be a different material than the first bonding layer material. Such designs may be suitable for varying the capabilities of the abrasive article such that the first bonding layer material is suitable for a first type of dressing operation and the second major surface of the substrate is suitable for a different dressing operation.

[0069] After placing the second bonding layer material on the second major surface at step **105**, the process can continue at step **107** by placing a second layer of abrasive grains within the second bonding layer material. Like step **102** described above, the placement of the second layer of abrasive grains can be completed in a random arrangement, a patterned arrangement, or even a self-avoiding random distribution (SARD™). Moreover, the second layer of abrasive grains can have the same arrangement as the first layer of abrasive grains.

[0070] Additionally, the abrasive grains used in the second layer can be the same as the abrasive grains of the first layer, including the same type of material and the same average grit size. However, in particular embodiments, the abrasive grains of the second layer can be different from the abrasive grains used in the first layer of abrasive grains. Use of different abrasive grains between the first major surface and second major surface may facilitate formation of an abrasive article capable of conducting different dressing operations. For example, the abrasive grains of the second layer may contain a different type of material than the abrasive grains of the first layer. In some designs, the abrasive grains of the second layer can have a different average grit size for completing a different dressing operation either on the same CMP pad or a different type of CMP pad.

[0071] After placing the second layer of abrasive grains within the second bonding layer material at step **107**, the process continues at step **109** by heating the substrate to form a CMP pad conditioner. Heating can be completed in a manner suitable for forming a braze layer from the first and second bonding layer material to secure the abrasive grains to the substrate.

[0072] In particular embodiments, the process of heating includes suspending the substrate material, such the abrasive grains of the first layer and the second layer are spaced apart from any contact surfaces. Such an arrangement avoids reorienting, rotating, and/or dulling of the abrasive grains during processing. In certain processes, during heating the substrate can be suspended in a vertical position above the furnace floor, such that the substrate is oriented at a perpendicular angle to the furnace floor. In other embodiments, the substrate can be suspended in a horizontal position above the furnace floor, such that the first major surface and second major surface are substantially parallel to the furnace floor. And still, in other embodiments, the substrate may be angled relative to the furnace floor, such that the first major surface and second major surface of the substrate are neither parallel nor perpendicular to the furnace floor.

[0073] According to one process, the substrate may change position during the heating process relative to a starting position and a stopping position. Changing the position of the substrate during heating can facilitate the formation of an abrasive article having a particular uniform bonding layer while also facilitating maintaining the original position of the abrasive grains. For example, changing the position of the substrate can include rotating, tilting, or inverting the substrate during heating. Such a process is particularly suitable for an abrasive article having bonding layer material and abrasive grains on first and second major surfaces.

[0074] The forming process described herein facilitates the formation of a reversible abrasive article having first and second major surfaces, each of which are suitable for abrasive processes. Moreover, the process described herein facilitates the formation of an abrasive article having superior flatness with regard to the first layer of abrasive grains and second layer of abrasive grains. The superior flatness facilitates improved processing and dressing of CMP pads.

[0075] Referring to FIG. **2**A a cross-sectional illustration of an abrasive article in accordance with an embodiment is provided. In particular, the abrasive article **200** includes a substrate **201** having a first major surface **202** and a second surface **204** opposite the first major surface **202**, wherein the first and second major surfaces **202** and **204** are joined by a side surface **206**. A first bonding layer **203** overlies and abuts the first major surface **202**, and a first layer of abrasive grains **221** is contained within the bonding layer **203**, such that the abrasive grains are secured to the substrate **201**. As illustrated, the first layer of abrasive grains **221** can have superior flatness as measured using a non-contact optical measuring method using various wavelengths of light to calculate distances along the surface and generate a map of the flatness of the sample. For example, the first layer of abrasive grains can have a flatness of not greater than about 0.02 cm, such as not greater than about 0.01 cm, or even not greater than about 0.005 cm. Such flatness measurements are gathered using optical auto-focusing technology to measure distance between points. An example of such technology is the Benchmark 450™ commonly available from VIEW Engineering, Inc.

[0076] The flatness of the first layer of abrasive grains **221** is relative to the flatness of the first bonding layer, and the orientation and size of the abrasive grains. As illustrated, the abrasive article **200** defines a lower working surface **211** generally defined by a plane extending through the upper most surfaces of the abrasive grains set at the lowest height above the surface of the bonding layer **203**. The abrasive article **200** further illustrates an upper working surface **213** defined by a plane extending through the upper most surfaces of the abrasive grains set at the greatest height above the surface of the bonding layer **203**. The difference between the lower working surface **211** and upper working surface **213** is the working surface distortion height **215** (Ah), which can be affected by a non-planar surface of the bonding layer **203** and further amplified by differences in grain sizes within the first layer of abrasive grains **221**. Notably, the forming process described herein facilitates the formation of abrasive articles having a reduced working surface distortion height **215** and superior flatness. In particular, the abrasive article **200** has a symmetry about the center of the substrate such that the first and second major surfaces **202** and **204** are formed to have similar structures including bonding layers **203** and **205** and layers of abrasive grains **221** and **223**. Such symmetry facilitates the formation of an abrasive article **200** having superior flatness and working surface distortion height with respect to the layers of abrasive grains **221** and **223** which is particularly suitable for conditioning of CMP pads.

[0077] As illustrated, the abrasive article **200** includes a bonding layer **205** attached to and abutting the second major surface **204** of the substrate **201**. A layer of abrasive grains **223** are contained and secured within the bonding layer **205**. Notably, the layer of abrasive grains **223** can have the same degree of flatness and working surface distortion height as the layer of abrasive grains **221** described herein.

[0078] Moreover, the abrasive article **200** can have a side surface **206** having particular contours facilitating the formation of the abrasive article **200**. For example, the substrate **201** can include engagement structures along the side surfaces for improving the forming process and also providing coupling structures for removably coupling the substrate **201** to a plate during conditioning operations. According to the illustrated embodiment, the engagement structures can include recesses **207** and **208** within the side surface **206** that extend laterally into the interior of the substrate **201**. The recesses **207** and **208** can be used to hold the substrate **201** (e.g., suspend the substrate **201**) during processing for suitable formation of the bonding layers **203** and **205** and layers of abrasive grains **221** and **223**. Additionally, the recesses **207** and **208** can provide formations for securing the abrasive article **200** within a plate as will be described in further embodiments. Other engagement structures are contemplated and will be described in more detail herein.

[0079] The abrasive article **200** further includes indicia **231** and **232** disposed on the side surface **206** of the substrate **201**. The indicia **232** corresponds to the first major surface **202** of the substrate **201** and the layer of abrasive grains **221** for identifying a wear status of the layer of abrasive grains **221**. Likewise, the indicia **231** corresponds to the second major surface **204** and is used to identify a wear status of the layer of abrasive grains **223**. During use, the indicia **231** and **232** can indicate the wear status by identifying the number of times the layer of abrasive grains have been used in a conditioning operation. The indicia aid a user in identifying the side that is used versus a side that is unused, and further aids identification of the remaining useable life of a corresponding layer of abrasive grains.

[0080] The indicia **231** and **232** of FIG. **2**A are illustrated as markings incorporating arrows corresponding to the layers of abrasive grains **223** and **221** respectively. It will be appreciated that upon completed use of either of the layer of abrasive grains **223** and **221**, a user may mark or score the indicia **231** or **232** indicating the corresponding layer of abrasive grains **223** or **221** have been used. In different embodiments, the indicia can include other means of identifying the wear status of the layers of abrasive grains **223** and **221**. For example, the indicia may include physical markings or printed markings, such as roman numerals, indicating the number of times the respective layer of abrasive grains **221** and **223** have been used.

[0081] In accordance with another embodiment, certain indicia can include color indicators, wherein the indicia have different color states identifying the wear status of the respective layer of abrasive grains **223** or **221**. In particular, the color indicators can have various color states wherein the color of the indicia changes with repetitive exposure to certain chemicals used in the CMP process. In accordance with other embodiments, other physical markings may be used as the indicia **231** and **232**. Alternatively, the indicia may be a user implemented material, such as a piece of adhesive or tape or other identifying structure indicating the number of times a layer of abrasive grains has been used and ultimately the wear status of the layer of abrasive grains.

[0082] FIG. **2**B includes a cross-sectional view of an abrasive article in accordance with an embodiment. The abrasive article **240** has the same features as the abrasive article **200** of FIG. **2**A including a substrate **201** having a first major surface **202**, a second surface **204** opposite the first major surface **202**, and a side surface **206**. The abrasive article further includes a first bonding layer **203** overlying and abutting the first major surface **202**, and a first layer of abrasive grains **221** contained within the bonding layer **203**, such that the abrasive grains are secured to the substrate **201**. A second bonding layer **205** overlies and abuts the second major surface **204**, and a second layer of abrasive grains **223** are contained within the bonding layer **205** such that the abrasive grains are secured to the substrate **201**. Notably, the abrasive article **230** includes different engagement structures **237** and **238** than the abrasive article **200**. As illustrated, the engagement structures **237** and **238** are protrusions that extend from the side surface **206** of the substrate **201** in a radial direction parallel that to the axis **291**.

[0083] FIG. **2**B further includes axes **290** and **291**, which are perpendicular to each other and define directions to aid the description of embodiments. The axis **290** extends through the abrasive article and defines a longitudinal or axial direction, which generally extends through a thickness of the abrasive article **230**. The axis **291** extends through the abrasive article and defines a lateral or radial direction, thereby defining a width or circumference of the abrasive article **230**. As used in the embodiments herein, reference to such directions will be understood to reference the general directions illustrated by the axes **290** and **291**.

[0084] FIG. **2**C includes a cross-sectional view of an abrasive article in accordance with an embodiment. The abrasive article **250** has the same features as the abrasive article **200** of FIG. **2**A including a substrate **201** having a first major surface **202** and a second surface **204** opposite the first major surface

202 that is joined by a side surface **206**. The abrasive article **250** further includes a first bonding layer **203** overlying and abutting the first major surface **202**, and a first layer of abrasive grains **221** contained within the bonding layer **203**, such that the abrasive grains are secured to the substrate **201**. Also illustrated is a second bonding layer **205** overlying and abutting the second major surface **204**, and a second layer of abrasive grains **223** contained within the bonding layer **205**, such that the abrasive grains are secured to the substrate **201**. Notably, the abrasive article **250** includes different engagement structures **257** and **258** than the abrasive article **200**. As illustrated, the engagement structures **257** and **258** include a combination of grooves and protrusions on the side surface **206** of the substrate **201**. In particular embodiments, the combination of grooves and protrusions can include a helical pattern, extending around the periphery of the side surface and forming a threaded engagement structure, such that the abrasive article can be screwed on a complementary structure, such as a plate including complementary threads.

[0085] The abrasive article **250** further includes a protective layer **261** overlying the layer of abrasive grains **223**. The protective layer **261** provides a layer of material overlying the abrasive grains to safeguard the grains from damage during shipping and further during use of the opposite side of the abrasive article **250**. According to one embodiment, the protective layer **261** can include a material that is removable when the user is ready to use the layer of abrasive grains **223**. The material may be removable using physical or mechanical force (i.e., peeling), heat, chemicals, radiation, or the like. As will be appreciated, the protective layer **261** can be provided on both sides of the abrasive article **250** such that before use, a protective layer **261** covers both layers of abrasive grains **221** and **223**.

[0086] For example, the protective layer **261** can include a polymer material, such as a thermoset, thermoplastic, resin, elastomer, and a combination thereof. Particularly suitable polymer materials can include acetates (e.g., polyvinyl acetate), polyamides, polyimides, polyurethanes, polyesters, fluoropolymers, gels, silicone, polyxylylenes (e.g., poly-para-xylylene or Parylene™) and a combination thereof. In certain designs, the protective layer **261** can include a porous material, such as a foam material providing additional protection to mechanical shocks and/or vibrations.

[0087] Certain protective layers **261** can include materials suitable for absorbing shock and protecting the covered portions of the abrasive article **250** covered. For example, the protective layer **261** can have a Shore A hardness of not greater than about 90 A based on the ASTM D2240 type A scale. In other embodiments, the protective layer **261** can have a Shore A hardness of not greater than about 80 A, such as not greater than about 70 A, not greater than about 60 A, or even not greater than about 50 A. Particular protective layers **261** have a Shore A hardness within a range between about 10 A and about 90 A, for example between about 20 A and about 70 A, and more particularly within a range between about 30 A and about 60 A.

[0088] FIG. **2**D includes a cross-sectional illustration of an abrasive tool in accordance with an embodiment. The abrasive article **270** can include a substrate **268** having a first major surface **202** and a second major surface **204**. Unlike previously described embodiments, the abrasive article **270** can be a monolithic article including the substrate **268** that has abrasive texture **263** and **264** integrally formed in the first and second major surfaces **202** and **204** of the substrate body. That is, the abrasive tool **270** may not necessarily include a bonding layer or abrasive grains contained in the major surfaces of the substrate **268**.

[0089] According to one embodiment, the abrasive article **270** includes a first set of protrusions **273** formed in the first major surface **202** of the substrate **268**. The first set of protrusions **273** extend in an axial direction from a lower surface **271** of the substrate **268**. The first set of protrusions **273** also define a first set of grooves **274** extending between each of the protrusions of the first set of protrusions **273**. Additionally, the abrasive article **270** includes a first upper surface **272** defined by the upper portions **275** of the first set of protrusions **273** that is axially displaced at a distance from the first major surface **202** and also axially displaced at a distance from the lower surface **271**. This design ensures that the protrusions can suitably engage and condition a CMP pad and reduce the likelihood of contact by other surfaces (e.g., **202** and **271**) with the pad. Moreover, such a design facilitates proper abrasion of a CMP pad and swarf removal.

[0090] The first set of protrusions **273** can be formed in a random manner on the first major surface **202**. However, in particular instances, the first set of protrusions **273** can be arranged in a pattern, such as any of those discussed with regard to the abrasive articles herein, for example, in the form of a self-avoiding random distribution (SARD™) pattern.

[0091] The substrate **268** can be formed of those materials previously described herein. For example, a material having an elastic modulus within a range between about 2E3 MPa and about 4E5. Certain substrate **268** materials can include metals, metal alloys, ceramics, polymers, and a combination thereof. Some embodiments may utilize a metal or metal alloy material that is magnetized or capable of being magnetized to facilitate removable coupling of the abrasive article **270** with a plate. More details of the removable coupling features incorporating magnets if provided herein.

[0092] Certain designs utilize a substrate **268** that includes an abrasive material, such that the sets of protrusions **273** and **277** integrally formed with the substrate **268** are made of an abrasive material. Suitable abrasive materials can include oxides, carbides, borides, nitrides, and a combination thereof. One particular embodiment utilizes a substrate **268** and sets of protrusions **273** and **277** comprising alumina.

[0093] Each of the protrusions of the first set of protrusions **273** can have a height (h) and a width (w) that defines a two-dimensional lateral contour. The two-dimensional lateral contour of the protrusions illustrated in FIG. **2**D is a generally triangular shape. However, the protrusions can have other polygonal shapes, including for example, rectangular, trapezoidal, and the like. Moreover, each of the protrusions within the first set of protrusions **273** may not necessarily each have the same shape. For example, within each set of protrusions, a combination of different polygonal two-dimensional lateral contours may be utilized.

[0094] As illustrated, the abrasive article **270** is formed such that it is a reversible CMP pad conditioning tool, having first abrasive texture **263** on the first major surface **202** and second abrasive texture **264** on the second major surface **204**. This design facilitates a process wherein a user can use the first abrasive texture **263** to condition a CMP pad or a series of CMP pads, and upon complete use of the first abrasive texture **263**, invert the abrasive article **270** and use the second abrasive texture **263** on the opposite surface to carry out conditioning processes on a CMP pad or a series of CMP pads.

[0095] The second abrasive texture **264** can include features similar to the first abrasive texture **263**. Notably, the second abrasive texture **264** is integrally formed within the body of the substrate **268** and includes a second set of protrusions **277** extending axially from a lower surface **276** defined by a second set of grooves **279** extending between each of the protrusions of the second set of protrusions **277**. The second set of protrusions **277** include upper portions **278** that define a second upper surface **280** axially displaced from the second major surface **204** and lower surface to facilitate suitable engagement of the second set of protrusions **277** with a CMP pad during a conditioning operation.

[0096] The second set of protrusions **277** can be oriented in the same manner at the second major surface **204** as the first set of protrusions **273**. That is, they may be formed in a same random arrangement, or alternatively, formed in a same patterned arrangement. Moreover, each of the protrusions within the second set of protrusions **277** can have the same two-dimensional lateral contour as each of the protrusions of the first set of protrusions **273**. Still, in particular embodiments, the arrangement or lateral contour of the protrusions of the second set of protrusions **277** can be different from the arrangement or lateral contour of the protrusions within the first set of protrusions **273**.

[0097] As further illustrated in FIG. **2**D, the abrasive article **270** can have engagement structures **257** and **258** for removably coupling the substrate **268** with a plate for reversible operation of the abrasive article **270**. It will be appreciated that while particular engagement structures are illustrated, the abrasive article **270** can incorporate any of the engagement structures described herein for removable coupling with a plate.

[0098] Given the distinct features noted above with regard to the abrasive article **270**, the method of forming the such an abrasive article may be different than the method described in accordance with FIG. **1**. Notably, the method may not include the placement of layers of abrasive grains within a bonding layer on opposite major surfaces of a substrate. Rather, in certain forming processes, the substrate **268** is obtained as a blank piece of material, having limited or no texture or other contours. The substrate **268** can be machined to have the proper contours including the abrasive texture on the first and second major surfaces. Additionally, the engagement structures can be formed within the substrate during the same machining process. The machining operations can be automated, and can include the use of computer guided lathes, other cutting instruments, and the like.

[0099] According to another method of forming the abrasive article **270**, the substrate **268** can be a molded article or cast article. In particular instances, the abrasive texture **263** and **264** can be formed simultaneously with the forming of the substrate **268**. The molding or casting process can start with various raw materials, such as powder raw materials to be molded or a slurry of material to be cast. The molding or casting process can be conducted to obtain a near final shape piece, including the substrate body having the first and second set of protrusions. After molding or casting, the piece can be dried, heat treated (e.g., sintered) and machined.

[0100] FIG. **2**E includes a cross-sectional illustration of an abrasive tool in accordance with an embodiment. Like the abrasive article **270** of FIG. **2**D, the abrasive article **290** includes a substrate **268** having a first major surface **202** and a second major surface **204**. In particular, the abrasive article **290** is a monolithic article including a substrate **268** having abrasive texture **263** and **264** integrally formed in the first and second major surfaces **202** and **204** of the substrate body. That is, the abrasive tool **290** may not necessarily include a bonding layer or abrasive grains contained in the major surfaces of the substrate **268**.

[0101] As provided in the illustrated embodiment, the abrasive article has a different shape, wherein the lower surface **291** and the first major surface **202** are within the same plane. Likewise, the lower surface **296** and the second major surface **204** are within the same plane. This design removes the distinction between these planes and may aid swarf removal and conditioning.

[0102] Moreover, the abrasive article **290** includes a magnet **293** within the substrate **268** that can facilitate removable coupling between the abrasive article **290** and a plate. The magnet **293** can be embedded within the body of the substrate **268** such that it is surrounded on all sides by the material of the substrate **268**. In other embodiments, the abrasive article **290** can incorporate more than one magnet, such as a series of magnets embedded within the body of the substrate **268**. The embodiments incorporating a series of magnets within the body of the substrate **268** may do so in a manner such that the magnets are aligned with each other along the radial axis. It will be appreciated throughout the disclosure that any of the abrasive articles illustrated in FIGS. **2**A-**2**E may can be combined with any of the abrasive tools of the embodiments herein.

[0103] FIG. **3** includes a cross-sectional illustration of an abrasive tool in accordance with an embodiment. In particular, the abrasive tool **300** includes an abrasive article **250** that is removably coupled to a plate **301**. In particular, the plate **301** includes a recess **304** extending into the interior of the plate **301** and configured to provide a space for removably coupling the abrasive article **201**. Moreover, the plate **301** and abrasive article **300** are removably coupled to each other via coupling mechanisms **351** and **352** that include the engagement structures **257** and **258** of the abrasive article **250** engaged with complementary coupling surfaces **261** and **262** of the plate **301**. That is, the plate **301** has particular shapes and coupling surfaces **261** and **262** particularly designed to be removably coupled to the abrasive article **250** having first and second working surfaces incorporating abrasive grains.

[0104] As illustrated, the abrasive tool **300** includes a plate **301** having a recess **304** such that the abrasive article **250** can be removably coupled to the plate **301** within the recess **304**. In accordance with a particular embodiment, the recess **304** has a depth **305** as measured between the upper surface **331** of the plate **301** and the bottom surface **309** of the recess **304**. Notably, the depth **305** of the recess **304** can be significantly greater than the height **335** of the abrasive article **200**, such that the layer of abrasive grains **223** contained within the recess **304** are spaced apart from the bottom surface **309**. Such an arrangement facilitates sufficient spacing between the bottom surface **309** and first layer of abrasive grains **223** to avoid destruction, dulling, or altering of the characteristics and orientation of the abrasive grains **223**.

[0105] As further illustrated, the abrasive tool **300** is designed such that the abrasive article **250** is particularly situated within the recess **304** of the plate **301**. That is, the upper major surface **202** of the substrate **201** can be flush with the upper surface **331** of the plate **301** such that only the bonding layer **203** and layer of abrasive grains **221** extend above the upper surface **331** of the plate **301**. Such a configuration facilitates the engagement of the layer of abrasive

grains **221** during a conditioning process and apt spacing between the upper surface **331** of the plate **301** and the pad during a dressing operation. The orientation between the abrasive article **250** and plate **301** in such a manner can be facilitated by the coupling mechanisms **351** and **352** which facilitate fixing the orientation between the abrasive article **250** and the plate **301**. As will be appreciated and described in more detail herein, the coupling mechanisms **351** and **352** can include alternative features and engagement structures using a variety of connections, such as an interference fit connection, latches, fasteners, levers, clamps, chucks, or a combination thereof. Certain coupling mechanisms described herein may further include magnetic coupling devices and/or electrode coupling devices (e.g., anodic bonding) between the abrasive article **250** and the plate **301**.

[0106] The plate can include a material that is suitable for use in CMP processing. For example, the plate **301** can include a same material as used in the substrate **201** of the abrasive article **200**. Moreover, the plate **301** is generally formed of a material having suitable mechanical characteristics, such as an elastic modulus of at least 2E3MPa. For example, in particular embodiments, the plate **301** is made of a material having an elastic modulus with in a range between about 2E3MPa and about 4E5MPa.

[0107] Some suitable materials for use as the plate **301** can include metals, metal alloys, polymers, and a combination thereof. For instance, in certain embodiments, the plate **301** is made of a metal material, such as a metal alloy, and particularly including transition metal elements. Alternatively, the plate **301** can include a polymer material, such that the plate is made of a durable polymer such as a thermoplastic, thermoset, or resin material. Notably, the plate **301** is designed to withstand repetitive CMP processing and dressing procedures. That is, the plate **301** is intended to be a reusable member, such that it may undergo many uses before being replaced. In short, the plate **301** is designed such that it is reusable member having a lifetime extending beyond that of the abrasive article **250**.

[0108] The plate **301** can include recesses **302** and **303** configured for engagement with a fixture typically designed to hold the dresser, such that the plate **301** and abrasive article **250** can be rotated in accordance with a dressing operation. It will be appreciated that while the plate **301** is illustrated as having recesses **302** and **303** for engagement with a fixture, other engagement structures may be used such as an arbor hole through the center of the plate **301** or other structures suitably designed such that the plate **301** can be rotated with the abrasive article **200** for conditioning and dressing of a CMP pad.

[0109] FIG. **4** includes a cross-sectional illustration of an abrasive tool in accordance with an embodiment. As illustrated, the abrasive tool includes a plate **301** having a recess **304** for removably coupling an abrasive article **200** therein. Notably, sealing members **409** and **410** can be disposed between the side surface **206** of the substrate **201** and side surfaces **341** and **342** of the plate **301** that define the recess **304**. The sealing members **409** and **410** are intended to avoid penetration of CMP fluids and debris from penetrating the connection between the abrasive article **250** and the plate **301**. Otherwise, such materials may contaminate other pads in subsequent dressing operations.

[0110] In accordance with an embodiment, the sealing members **409** and **410** can be attached to the substrate **201**. For example, the sealing members **409** and **410** can extend in a peripheral direction (i.e., around the periphery) on the side surface **206** of the substrate **201**. In other embodiments, the sealing members **409** and **410** can be attached to the plate **301**. Still, certain designs may incorporate one sealing member **409** that is fixedly attached to the substrate **201** and the second sealing member **410** can be fixedly attached to the plate **301**. The sealing member **409** may extend in a direction along the periphery of the side surface **206** of the substrate **201**. That is, the sealing member **409** can extend circumferentially (in the case of a circular substrate) around the entire periphery of the side surface **206** of the substrate **201**. Likewise, the sealing member **410** can be engaged with the recess **403** and extend along the periphery, and particularly the entire periphery, of the side surface **206** of the substrate **201**. In accordance with one embodiment, the sealing member **409** is disposed within a recess **401** along the side surface **206** of the substrate **201**.

[0111] Additionally, the plate **301**, and the side surface **341** of the plate **301** can be formed to include a complementary recess **407** for receiving the sealing member **409**. Likewise, the sealing member **410** can be arranged in a similar configuration such that the substrate **201** has a receiving surface **403** for engagement with the sealing member **410** along the side surface **206**. Moreover, the side surface **341** of the plate **301** can have a complementary receiving surface configured to accept and engage the sealing member **410** therein.

[0112] According to one particular design, the sealing member **409** and sealing member **410** can be spaced apart from each other. Certain designs incorporate the sealing member **409** disposed along the side surface **206** in a position that is closer to the first major surface **202** of the substrate **201**, while the sealing member **410** is disposed in a position along the side surface **206** closer to the second major surface **204** of the substrate **201**. Notably, each of the sealing members **409** and **410** are spaced apart from the engagement structure **307**. Such a design facilitates the sealing members properly engaging the recesses **407** and **405** along the side surface **341** of the recess **304** independent of the orientation between the first layer of abrasive grains **221** or second layer of abrasive grains **223**. That is, whether the abrasive article **250** is oriented as illustrated in FIG. **4**, or inverted such that the layer of abrasive grains **223** are extending from the recess **304**, the sealing members **409** and **410** are properly engaged within the recesses **405** and **407** of the plate **301**.

[0113] The sealing members **409** and **410** can be a deformable or pliable member. For example, the sealing members **409** and **410** can include a polymer material. Some suitable polymer materials include elastomers. In accordance with one particular embodiment, the sealing members **409** and **410** can be o-rings. It will be appreciated that while the sealing members **409** and **410** are illustrated as having particular contours and placement. Other sealing members and configurations are contemplated. For example, the sealing member may be a single film or layer of material disposed between the substrate **201** and the plate **301**.

[0114] FIG. **5** includes a cross-sectional illustration of an abrasive tool in accordance with an embodiment. The abrasive tool **500** includes an abrasive article **200** removably coupled to a plate **301** and contained within a recess **304** of the plate **301**. A coupling mechanism that includes fasteners **505** and **506** facilitates removable coupling between the abrasive article **200** and the plate **301**. According to the illustrated embodiment, the plate **301** can include openings **501** and **502** for engagement of fasteners therein. As illustrated, the fasteners may be angled relative to the upper surface **331** of the

plate **301** and relative the axial and radial directions, such that a user can access the fasteners **501** and **506**. The openings **501** and **502** allow the fasteners **505** and **506** to be disposed within the plate **301** below the upper surface **331** to avoid engagement between the fasteners **505** and **506** and a CMP pad during a dressing operation.

[0115] Each of the openings **501** and **502** can include a channel portion **503** and **504** extending from the openings **501** and **502** through an interior portion of the plate **301**. The channel portions **503** and **504** can have a diameter that is smaller than the openings **501** and **502** for engagement of the threaded portion of the fasteners **505** and **506** therein. The abrasive tool **500** can further include channels portions **509** and **510** that extend into the interior of the substrate **201**. Notably, the channels portions **509** and **510** are aligned with the channels portions **503** and **504** along their longitudinal axes, such that the channel portions **503** and **509** are coaxial with each other and channel portions **504** and **510** are coaxial with each other. The alignment between the channel portions **503** and **504** of the plate **301** with the channel portions **509** and **510** of the substrate **201** facilitates engagement of the fasteners **505** and **506** therein and coupling between the plate **301** and substrate **201**.

[0116] Proper alignment of the channel portions **503** and **504** of the plate **301** and the channel portions **509** and **510** of the substrate **201** can be facilitated by use of ridges **521** and **523** extending from the surfaces **341** and **342** of the plate **301** within the recess **304**. The abrasive article **200** can be placed within the recess **304** until a portion of the abrasive article **200** engages the ridges **521** and **523**, which ensures proper orientation between the channel portions **503**, **504**, **509** and **510**.

[0117] During operation, the abrasive article **200** can be removably coupled with the plate by placing the abrasive article **200** within the recess **304** of a plate **301** and securing the abrasive article in place using fasteners **505** and **506**. After sufficient use of the first side of abrasive grains **221**, the user may unscrew the fasteners **505** and **506**, inverting the abrasive article **200** exposing the second layer of abrasive grains **223**, and using the fasteners to secure the position of the abrasive article **200** within the recess **304** of the plate **301**.

[0118] FIG. **6** includes a cross-sectional illustration of an abrasive tool in accordance with an embodiment. As illustrated, the abrasive tool **600** includes an abrasive article **200** removably coupled within a recess **304** of a plate **301**. The abrasive tool **200** and plate **301** are removably coupled via a coupling mechanism that includes a latching mechanism **601**. As illustrated, the latching mechanism **301** includes a latch **607** having an elongated member **609** attached to a head member **610** that can be moved within a channel **606** within the plate **301** and a complementary channel **605** that extends into the interior of the substrate **201**.

[0119] The latching structure **601** further includes a biasing member **603** disposed between a surface of the plate **301** and the head member **610**. The biasing member **603** can resiliently bias the latching member **607** in the position as illustrated, such that the elongated member **609** extends into the channel **606**, and more particularly, extends into the complementary channel **605** to couple the plate **301** and abrasive article **200** to each other. Upon releasing the abrasive article **200** from within the recess **304**, the user can manipulate the head member **610** in a direction **612** as illustrated to remove the elongated member **609** from the channel **605** of the substrate **201** thereby facilitating removal of the abrasive article from within the recess **304**. Upon removal, the user can reverse the abrasive article **200** for use of the opposite layer of abrasive grains **223**. Accordingly, the substrate **201** can further include a second complementary channel **615** disposed opposite of the channel **605** configured to engage the elongated member **609** of the latching member **607**. As will be appreciated, ridges or other placement members as illustrated in FIG. **5** may be used to properly orient the abrasive article **200** and the plate **301** to facilitate engagement of the latching structure **601**.

[0120] FIG. **7** includes a cross-sectional illustration of an abrasive tool in accordance with an embodiment. As illustrated, the abrasive tool **700** includes an abrasive article **200** configured to be removably coupled within a recess **304** of the plate **301**. Unlike previous embodiments, the substrate **201** of the abrasive article **200** has a unique shape configured to be coupled within the recess **304** of the plate **301**. In particular, the substrate **201** includes angled surfaces **703** and **701** which are configured to engage the angled surface **702** of the recess **301**. The surfaces **703** and **701** are angled with respect to the upper major surface **202** and lower major surface **204** of the substrate **201** such that angles **721** and **722** are formed between the two surfaces. In particular, the angles **721** and **722** can be obtuse angles (>90°) that facilitate centering of the abrasive article **200** within the recess **304** and can also allow for a gap **707** between the side surfaces **341** and **342** and the bonding layer **205** and layer of abrasive grains **223**. The gap **707** reduces likelihood of damage to the layer of abrasive grains **223** during coupling of the plate **301** and abrasive article **200**.

[0121] As illustrated, the plate **301** and the abrasive article **200** are removably coupled via a coupling mechanism **709** that includes engagement structures (i.e., protrusions) **741** and **742** extending laterally from the substrate **201** that are configured to engage a complementary coupling surface **743** of the plate **301**. In one embodiment, the abrasive article **200** can be removably coupled with the plate **301** by placing the abrasive article **200** within the recess until the surface **701** engages the surface **702**. Upon placement of the abrasive article **200** within the recess, the abrasive article can be rotated until the engagement structures engage the complementary coupling surface **743** and the substrate **201** and plate **301** are secured against each other, such as in a rotate-and-lock coupling arrangement.

[0122] The abrasive tool **700** can further include a sealing layer **715** disposed between surfaces of the substrate **201** and plate **301**. The sealing layer **715** facilitates sealing of the connection between the substrate **201** and plate **301** from penetration by CMP liquids and debris. In one particular embodiment, the sealing layer **715** can include a polymer material that may be easily removed after use of the abrasive article. For example, the sealing layer **715** can be a silicone or low temperature polymer than can be removed or softened via heat treatment to facilitate removal of the abrasive article **200** from the plate **301**.

[0123] FIG. **8** includes a cross-sectional view of an abrasive tool in accordance with an embodiment. The abrasive tool **800** includes an abrasive article **200** removably coupled with a plate **830**, wherein the plate **830** comprises a first fixture **801** and a second fixture **803** and the abrasive tool **800** is coupled to the plate **830** within the recess **834**. Generally herein, the plate can include separate members that can be removably coupled to each other via coupling mechanisms such as, magnetic means, pressurized means, electronic coupling means, mechanical means, and a combination thereof. Cer-

tain mechanical means can include fasteners, latches, clamps, locks, biasing members, the like, and a combination thereof.

[0124] According to the abrasive tool **800** of FIG. **8**, the first fixture **801** can be a generally planar member. The first fixture **801** can be made of the same materials as the plate **301** described in other embodiments. For certain designs, openings **805** and **806** can be present within the body of the first fixture **801**, which can extend axially through a portion of the body. In particular, the openings **805** and **806** can extend through the entire thickness of the first fixture **801** for engagement of fasteners **809** and **810** therein.

[0125] According to one embodiment, the first fixture **801** can include a biasing member **811** attached to the upper surface **831** of the first fixture **801**. The biasing member **811** can extend from the upper surface **831** and is configured to engage portions of the substrate **201**, such as the engagement members **827** and **828** to resiliently bias the position of the abrasive article **200** within the recess **834**. Additionally, the biasing member **811** can be coupled to the engagement members **827** and **828** upon assembly of the abrasive tool **800** such that the abrasive article **200** can be clamped between portion of the biasing member **811** and a portion of the second fixture **803**. Such a design can reduce the likelihood of damage to the abrasive article **200** and improve conditioning performance. According to one particular embodiment, the biasing member **811** can have an annular shape.

[0126] Suitable materials for use in the biasing member **811** can include metals, ceramics, polymers, or a combination thereof. In certain embodiments, the biasing member **811** can include a metal spring or the like. According to other embodiments, the biasing member **811** can include a polymer material, and the like. Additionally, the biasing member **811** can be a solid material that is a monolithic piece, such as a foam material or elastomer material. It will be appreciated that the engagement structures **827** and **828** are different structures, however in other designs, the substrate may include a single engagement structure extending around the entire periphery of the side surface of the substrate **201**.

[0127] The first fixture **801** and the second fixture **803** can be coupled by fasteners **809** and **810**. Accordingly, the second fixture **801** can include openings **807** and **808** configured to align with the openings **805** and **806** within the first fixture **801** to accept and engage the threaded portions of the fasteners **809** and **810**.

[0128] As further illustrated, the body of the second fixture **803** can include a ridge **850** extending in a direction perpendicular to the body of the second fixture **803** and configured to engage the side surface of the substrate **201**. The ridge **850** can extend circumferentially around the inner surface of the second fixture **803** to facilitate clamping the second fixture **803** and the first fixture **801** against the engagement members **827** and **828** of the substrate to secure the abrasive article **200** in the recess **834**.

[0129] The second fixture **803** can further include a sealing member **813** disposed on an interior surface **815** of the ridge **850**. The sealing member can be disposed in this position to inhibit debris and conditioning fluids from entering the recess **834** and interfering with the operation of the abrasive tool **800**. In one particular embodiment, the sealing member **815** is fixedly attached to the interior surface **815** such that it is properly placed during assembly of the abrasive tool **800**. The sealing member **815** can include those features of the sealing members described in accordance with other embodiments herein.

[0130] During assembly of the abrasive tool **800**, the abrasive article **200** can be placed over the first fixture **801** such that the engagement structures **827** and **828** engage the biasing member **811**. The second fixture **803** can then be placed such that the ridge **850** is overlying the engagement structures **827** and **828** and the sealing member **813** is engaged with the top surface of the engagement structures **827** and **828**, such that the abrasive article **200** is clamped between the sealing member **813** and the biasing member **811**. The openings **807** and **808** of the second fixture **803** can be aligned with the openings **805** and **806** of the first fixture **801** and the fasteners can be engaged within the openings thus securing the first and second fixtures **801** and **803** together and clamping the abrasive article **200** within the recess **834**.

[0131] FIG. **9** includes a cross-sectional illustration of an abrasive tool in accordance with an embodiment. The abrasive tool **900** includes an abrasive article **200** removably coupled to a plate **930**, wherein the plate comprises a first fixture **801**, a second fixture **803**, and a recess **934** formed between the first fixture and second fixture **803**. As illustrated, the abrasive tool **900** can have a similar construction as the abrasive tool **800** of FIG. **8**, however, the abrasive tool **900** includes a different coupling mechanism between the first fixture **801** and second fixture **803**. In particular, the first fixture **801** and second fixture **803** are coupled together via a coupling structure **955**, wherein the first fixture **801** and second fixture **803** can be threaded or screwed together directly. The direct threaded connection is facilitated by complementary threaded surfaces **901** on each of the first fixture **801** and second fixture **803**. Notably, while the means of engagement between the first fixture **801** and second fixture **803** differ in the abrasive tool **900** from the abrasive tool **800**, the manner of assembling the abrasive tool **900** can be substantially the same as described in accordance with the embodiment of FIG. **8**.

[0132] FIG. **10** included a cross-sectional illustration of an abrasive tool in accordance with an embodiment. Notably, the abrasive tool **1000** includes an abrasive article **200** that is removably coupled to a plate that includes a first fixture **801**, second fixture **803**, and a recess **1034** formed between the first fixture **801** and second fixture **803**. As illustrated, the abrasive tool **1000** has the same design as the abrasive tool **900** described herein, including a first fixture **801** that is coupled to a second fixture **803** via a coupling structure **955**.

[0133] The abrasive tool **1000** can include a biasing member **1005** extending from the upper surface **931** of the first fixture **801**. In particular, the biasing member **1005** can have an annular shape such that it extends circumferentially around the center point of the first fixture **801**. Moreover, the biasing member **1005** can have a chamfered surface **1015** for engagement with engagement structures **1027** and **1028** extending from the substrate **201**, which according to the illustrated embodiment, include complementary chamfered surfaces. Use of chamfered surfaces on the engagement structures **1027** and **1028** facilitates proper positioning of the abrasive article **200** within the recess **1035**. Moreover, the abrasive tool **1000** can include a member **1007** coupled to the second fixture **803** and configured to engage the engagement structures **1027** and **1028** upon assembly of the abrasive tool **900**. In particular, the member **1007** can be a pliable member capable of deformation, thus facilitating the proper placement and orientation of the abrasive article **200** within the recess **1034**. Likewise, the member **1007** can have a chamfered

surface **1016** configured to engage complementary, upper sloped surfaces of the engagement structures **1027** and **1028**.

[0134] FIG. **11** includes a cross-sectional illustration of an abrasive tool in accordance with an embodiment. As illustrated, the abrasive tool **1100** includes an abrasive article **200** that is contained within a recess **1106** of a plate **1101**. Notably, the plate **1101** is a generally H-shaped member having a first arm **1103** and a second arm **1102** joined by a third arm **1104** forming a first recess **1106** and a second recess **1107** therebetween. During assembly, the abrasive article **200** can be placed within the recess **1106** by first placing sufficient pressure within the first recess **1107** to urge the arms **1103** and **1102** to move away from each other in the directions **1105** and **1108**. The application of pressure can be provided by a fluid or gas. After the arms **1102** and **1103** have been sufficiently separated in the directions **1105** and **1108**, the abrasive article **200** can be placed within the recess **1106** between the arms **1102** and **1103**, and after proper placement of the abrasive article **200**, the pressure within the recess **1107** can be changed (i.e., lessened) to urge the arms **1103** and **1102** to return to the starting position. Removal of the pressure from within the recess **1107** allows the arms **1103** and **1102** to return to their original positions, thereby clamping the abrasive article **200** in place between the arms **1103** and **1102** within the recess **1106**. To remove the abrasive article **200**, pressure can be applied within the recess **1107** to separate the arms **1103** and **1102** in the directions **1108** and **1105**.

[0135] FIG. **12**A includes a cross-sectional illustration of a portion of an abrasive tool in accordance with an embodiment. Notably, the abrasive tool **1200** includes a plate **1201** and an abrasive article **1202** overlying and removably coupled to the plate **1201**. In particular, the abrasive article **1202** includes engagement structures in the form of openings **1207** and **1209** that extend axially through the entire thickness of the abrasive article **1202**. The openings **1207** and **1209** are configured to be engaged with pins **1203** and **1204** extending from an upper surface **1205** of the plate **1201**, such that the abrasive article **1202** is secured in its placement and orientation relative to the plate **1201**. The pins **1203** and **1204** can be affixed to the upper surface **1205** of the substrate **1201**, or in other designs, the pins **1203** and **1204** and substrate **1201** can be a single monolithic piece.

[0136] As further illustrated, the pins **1203** and **1204** can include upper layers **1213** and **1214** that overlie the top surfaces of the pins **1203** and **1204**. In particular, the upper layer **1213** and **1214** can be directly attached to the upper surfaces of the pins **1203** and **1204**, and more particularly, the upper layers **1213** and **1214** can be configured to be flush with the upper surface of the bonding layer **203** of the abrasive article **1202**. The upper layers **1213** and **1214** facilitate sealing the connection between the abrasive article **1202** and the pins **1203** and **1204**. Moreover, the upper layers **1213** and **1214** can be made of a soft or pliable material such that they do not interfere with a conditioning process. According to one embodiment, the upper layers **1213** and **1214** can include a polymer material.

[0137] The abrasive tool **1200** can further include magnets **1213**, **1214**, and **1215** disposed within the plate **1201** and configured to magnetically attract and couple the substrate **201** of the abrasive article **1202** to the plate **1201**. The magnets **1213-1215** can have a polarity that is suitable for attracting the substrate **1201** or other material within the abrasive article **200** to the upper surface **1205** of the plate **1201**. The magnets **1213-1215** can be embedded within the plate **1201** such that they are completely surrounded on all sides by the material of the plate **1201**.

[0138] It will be appreciated while the abrasive tool **1200** of FIG. **12**A is illustrated as including magnets **1213**, **1214**, and **1215** within the interior of the plate **1201**. In accordance with other embodiments, such magnets may be present in the abrasive article **1202**. Moreover, both the abrasive article **1202** and the plate **1201** may include magnets such that they are opposite in polarity and attract each other thereby securing the abrasive article **1202** to the plate **1201**. Moreover, it will be further appreciated that while the embodiment of FIG. **12**A demonstrates magnets, any of the embodiments herein may incorporate magnetic coupling mechanisms to form abrasive tools.

[0139] In accordance with an alternative embodiment, the plate **1201** and abrasive article **1202** may be removably coupled via electrode connections, such as anodic bonding, wherein opposite charges are provided at the plate **1201** and substrate **201** to encourage coupling between the two members.

[0140] The abrasive tool **1200** is illustrated in a top view in FIG. **12**B, and as described, the abrasive tool **1200** includes an abrasive article **1202** having openings **1207** and **1209** for engagement of pins **1203** and **1204** therein. Notably, the openings **1207** and **1209** within the abrasive article **1202** are spaced apart radially from a center point **1220**, and in particular, the opening **1207** within the abrasive article **1202** is spaced apart at a radial distance **1221** from the center point **1220** of the abrasive article **1202**, while the opening **1209** is spaced apart from the center point **1220** by a radial distance **1222**. Spacing of the openings **1207** and **1209** from the center point **1220** of the abrasive article **1202** facilitates locking the abrasive article **1202** on the place **1201** such that it does not rotate during a conditioning operation.

[0141] FIG. **12**C includes a top view of an abrasive tool in accordance with an embodiment. The abrasive tool **1250** includes an abrasive article **1202** which is overlying an upper surface of a plate (not shown). The abrasive article **1202** includes openings **1217** and **1219** which are spaced apart from the center point **1253** of the abrasive article **1202**. In particular, the openings **1217** and **1219** are situated at the periphery of the abrasive article **1202** such that the circumference of the abrasive article **1202** intercepts the openings **1217** and **1219**. Additionally, the openings **1217** and **1219** can be spaced at a distance from a center point **1253** and a radial distance of **1251** and **1252** as illustrated to facilitate suitable coupling between the abrasive article **1202** and the plate such that the abrasive article **1202** does not rotate or change position during a dressing operation.

[0142] FIG. **13** includes a top view illustration of an abrasive tool in accordance with an embodiment. As illustrated, the abrasive tool **1300** can include an abrasive article **1302** which can be removably coupled to a plate (not illustrated), which can be coupled to the bottom of the abrasive article via a clamp ring **1301**. The clamp ring **1301** includes a first ring portion **1303** and a second ring portion **1304** that are configured to extend around the periphery of the abrasive article **1302** and secure it to the clamp ring **1301**. The first ring portion **1303** and the second ring portion **1303** can be joined by a clamp assembly **1305** which includes a fastener **1308**. During operation, the abrasive article **1302** can be placed within the clamp ring **1301** and the first portion **1303** and second portion **1304** can be closed around the abrasive article

1302 via engagement of the fastener **1308** between a first clamp portion **1306** and a second clamp portion **1307**. In particular, engagement of the fastener **1308** with the first clamp portion **1306** and second clamp portion **1307** helps reduce space between the first and second clamp portions **1306** and **1307** and secure the abrasive article **1302** between the first ring portion **1303** and second ring portion **1305**.

[0143] FIG. **14** includes a cross-sectional illustration of an abrasive tool in accordance with an embodiment. The abrasive tool **1400** includes a coupling mechanism **1402** for removably coupling the abrasive article **200** with the plate **1401**. According to the illustrated embodiment, the coupling mechanism **1402** utilizes an engagement structure **1405** extending from the body of the substrate **201** which engages protrusions **1403** and **1404** within the plate **1401**. In particular, the engagement structure **1405** is a protrusion that extends laterally from the side of the substrate and configured to be engaged in a recess between the protrusions **1403** and **1404** of the plate. Moreover, the coupling mechanism **1402** further includes a fastener **1406** to facilitate coupling between the engagement structure **1405** of the substrate **201** and protrusions **1403** and **1404** of the plate **1401**. As will be appreciated, the engagement structure **1405** and protrusions **1403** and **1404** can have openings extending through them for engagement of the fastener **1406** therein. Additionally, a washer **1407** may be disposed between the fastener **1406** and a surface of the plate **1401**.

[0144] During operation, the engagement structure **1405** of the substrate **201** can be placed in between the protrusions **1403** and **1404** of the plate **1401** and upon proper alignment between the protrusions **1403**, **1404**, and **1405**, a fastener **1406** may be threaded through each of the protrusions **1403-1405** to removably couple the abrasive article **200** to the plate **1401**. It will be appreciated that while the abrasive tool **1400** is illustrated as having a single coupling mechanism **1402** disposed on one side of the abrasive article **200**, additional coupling mechanisms can be added to properly secure the abrasive article **200** to the plate **1401**.

[0145] The abrasive tool **1400** further includes sealing members **1418** and **1419**. In particular, the sealing members **1418** and **1419** are disposed at a position below the coupling mechanism **1402** and are attached to the plate **1401**. As further illustrated, the sealing members **1418** and **1419** are situated in a manner to engage the side surface of the abrasive article **200**, and in some designs, the sealing members **1418** and **1419** may engage the bonding layer **205** to inhibit debris and fluids from entering the recess **1435** and avoid contamination of the unused side of the abrasive article **200** and risk contamination of pads to be dressed in subsequent dressing operations. While not illustrated in the embodiment of FIG. **14**, additional sealing members may be placed at particular positions between the abrasive article **200** and surfaces of the plate **1401**, such as at a location between the substrate **201** and the protrusion **1403** to inhibit debris and fluids form entering the coupling mechanism **1402**.

[0146] FIG. **15** includes a cross-sectional illustration of an abrasive tool in accordance with an embodiment. The abrasive tool **1500** can include an abrasive article **200** that is removably coupled to a collet member **1501**, and the collet member **1501** can be removable coupled to a plate **1510**. In accordance with one embodiment, the abrasive tool **1500** includes engagement structures **1503** and **1504** and is configured to be removably coupled to the abrasive article **200** within a recess **1514** of the collet member **1501**. The coupling mechanisms **1503** and **1504** can include protrusions **1513** and **1514** extending from the body of the collet number **1501** and configured to engage recesses **1523** and **1524** within the substrate **201**. While the coupling mechanisms **1503** and **1504** are illustrated as including protrusions **1513** and **1514** engaged within the recesses **1523** and **1524**, it will be appreciated that any of the other coupling mechanisms described herein can be used to couple the abrasive article **200** to the collet member **1501**.

[0147] As illustrated, the collet member **1501** can include a surface **1507** that is slanted or angled with respect to the first and second major surfaces **202** and **204** of the substrate **201** and the bottom surface **1508** of the collet member **1501**. Additionally, in certain embodiments, the collet member **1501** can include an engagement structure **1516** disposed in the surface **1507** to removably couple the collet member to the plate **1510**. In particular, the collet member **1501**, and more particularly, the engagement structure **1516** can include a channel **1519** within the surface **1507** configured to engage a protrusion **1517** within the plate **1510** such that the two components can be removably coupled. In certain embodiments, the engagement structure **1516** can include a rotate-and-lock mechanism such that the protrusion **1517** of the plate **1510** can be initially engaged within the channel **1519** of the collet member **1501**, and thereafter, either the collet member **1501** or the plate **1510** can be rotated by a certain degree to lock the position of the collet member **1501** relative to the plate **1510**. It will be appreciated that the collet member **1501** is an intermediate component between the abrasive article **200** and the plate **1510**, and moreover, such a collet member **1501** may be used with any of the embodiments herein.

[0148] Moreover, the collet member **1501** can be a composite member including more than one type of material, such that certain portions of the collet member **1501** are capable of expanding and retracting around the plate **1510** at the coupling interface to facilitate a compliant and tight fit between the two components. For example, portions of the collet member **1501** can include a hard material such as a metal or metal alloy that can be coupled to a portion of the collet member **1501** that includes a softer material such as a polymer material, for example a rubber or silicone material. Notably, the portions including the softer material can include those surfaces designed to directly couple the collet member **1501** to the plate **1510**.

[0149] FIG. **16** includes a top view illustration of an abrasive tool in accordance with an embodiment. As illustrated, the abrasive tool **1600** includes an abrasive article **1602** which includes a substrate **1603** and layer of abrasive grains **1621** overlying the substrate **1603**. In certain designs, the substrate **1603** can have a generally polygonal shape including sides and corners, while the layer of abrasive grain **1621** are oriented on the surface in a shape that is different than the general shape of the substrate **1603**. For example, as presented in the embodiment of FIG. **16**, the layer of abrasive grains are present on the surface of the substrate **1603** in a generally circular pattern. In particular, the shape of the substrate **1603** such that it incorporates sides and corners facilitates easier coupling of the substrate **1603** with a plate (not illustrated) for removable coupling the abrasive article **1602** with a plate.

[0150] FIG. **17** includes a top view illustration of an abrasive tool in accordance with an embodiment. The abrasive tool **1700** includes a plate **1701** that is removably coupled to an abrasive article **1702**. In particular, the plate **1701** can have

a contour as viewed from the top (as opposed to a cross-sectional contour as viewed through a portion of the plate body) that is significantly different than a contour of the abrasive article **1702**. For example, according to the illustrated embodiment of FIG. **17**, the plate **1701** can have a generally circular contour as viewed from the top while the abrasive article **1702**. However, the abrasive article **1702** has a contour that includes an arcuate portion **1705** defining a portion of the periphery and further includes a flat portion **1703** that defines a portion of the periphery. In particular, the arcuate portion **1705** can have a generally semi-circular shape such that it extends through at least 180° of the periphery. Notably, the flat **1703** provides corners and a side that facilitates securing the position and the orientation of the removable abrasive article **1702** within the plate **1701** such that the abrasive article **1702** does not rotate or shift during a dressing operation.

[0151] FIG. **18** includes a top view illustration of an abrasive tool in accordance with an embodiment. The abrasive tool **1800** includes an abrasive article **1802** removably coupled with the plate **1801**. In particular, the abrasive article **1802** includes openings **1803** and **1804** that can extend through the layer of abrasive grains and bonding layer into the interior of the body of the substrate. The openings **1803** and **1804** can be used for removably coupling the abrasive article **1802** with the plate **1801**. For example, according to one embodiment, the openings **1803** and **1804** can provide key hole openings for a tool that is designed to engage the abrasive article **1802** within the openings **1803** and **1804** and aid gripping and removal of the abrasive article **1802** from the plate **1801**. For example, in one embodiment a keyed tool can include a handle and complementary protrusions configured to engage the abrasive article **1802** within the openings **1803** and **1804**. In particular instances, the keyed tool can be used to rotate the abrasive article **1802** relative to the plate **1801** thereby removing the abrasive article **1802** from the plate **1801**. In alternative designs, the abrasive article **1802** and plate can be removably coupled via magnetic attraction, and the keyed tool can include a complementary protrusions configured to engage the abrasive article **1802** within the openings **1803** and **1804** and further include a magnet configured to attract the abrasive article **1802** and effectively decouple the abrasive article **1802** from the plate **1801**.

[0152] FIG. **19** includes a top view illustration of an abrasive tool in accordance with an embodiment. The abrasive tool **1900** includes a plate **1901** that includes a plurality of abrasive articles **1912**, **1913**, **1914**, **1915** (**1912-1915**) oriented in a particular arrangement on the surface of the plate **1901**. As illustrated, the abrasive articles **1912-1915** can each have a unique shape different from each other to form a pattern on the surface of the plate **1901**. Additionally, the abrasive tool **1900** includes channels **1903** and **1904** separating the abrasive articles **1912-1915**. The channels **1903** and **1904** formed on the surface of the abrasive tool **1900** may facilitate removal of swarf and other debris during a CMP dressing operation. It will be appreciated that each of the abrasive articles **1912-1915** have a unique shape and are configured to be removably coupled with the plate **1901**.

[0153] FIG. **20** includes a top view illustration of an abrasive tool in accordance with an embodiment. The abrasive tool **2000** includes a plate **2001** and an abrasive article **2002** removably coupled to the plate **2001**. Like the other embodiments herein, the abrasive article **2002** is reversible having a substrate including a layer of abrasive grains on a first major surface and second major surface opposite the first. In particular, the coupling mechanism for removably coupling the abrasive article **2002** to the plate **2001** includes a series of maneuverable jaws **2005**, **2006**, **2007**, and **2008** (**2005-2008**). According to one embodiment, the maneuverable jaws **2005-2008** can be moved to engage and clamp the abrasive article **2002** on the surface of the plate **2001**. The maneuverable jaws **2005-2008** can be actuated using different mechanisms, including for example mechanical means, such as a turn, screw, crank, wedge, slide, or the like. The maneuverable jaws **2005-2008** can be operated individually or together for proper positioning of the abrasive article **2002** on the plate **2001**.

[0154] In one particular embodiment, the maneuverable jaws **2005-2008** can be moved in the directions indicated by the arrows **2013**, **2014**, **2015**, and **2016**, that is, in generally inward and outward radial directions with respect to the center of the plate, to engage the abrasive article **2002**. In certain designs, the maneuverable jaws **2005-2008** can be moved by rotating the plate **2001** (or the maneuverable jaws **2005-2008** relative to the plate **2001**) in the direction as indicated by arrow **2020**. Accordingly, the plate **2001** may include ridges or grooves, particularly spiral ridges or grooves, along it upper surface for coupling and moving the maneuverable jaws **2005-2008** relative to the surface of the plate **2001**. For example, rotation of the plate **2001** in a clockwise direction may facilitate moving the maneuverable jaws **2005-2008** in a radially inward direction (toward the center of the plate **2001**) to engage the abrasive article **2002**. While rotation of the plate **2001** in an opposite direction may facilitate moving the maneuverable jaws **2005-2008** in a radially outward direction.

[0155] During use of the abrasive tool **2000**, a user can place the abrasive article **2002** on the plate **2001** and rotate the plate or a portion of the plate (e.g., an upper portion of the plate) in a clockwise manner until the maneuverable jaws **2005-2008** are moved radially inward and engage the abrasive article **2002**. After sufficient use of the abrasive article **2002**, a user can remove the abrasive article **2002** by rotating the plate in an opposite direction (i.e., counter-clockwise direction) to move the maneuverable jaws **2005-2008** in a radially outward direction thus disengaging the abrasive article **2002** for removal from the plate **2001**.

[0156] Additionally, the abrasive tool **2000** can include sealing members **2009**, **2010**, **2011**, and **2012** (**2009-2012**). In accordance with one embodiment, the position of the sealing members **2009-2012** are fixed on the surface of the plate **2001** thereby facilitating initial placement of the abrasive article **2002** relative to the plate **2001**. Moreover, during movement of the maneuverable jaws **2005-2008** in a radially inward direction, the sealing members **2009-2012** can be disposed between each of the arms **2005-2008** facilitating sealing between the maneuverable jaws **2005-2008**, the abrasive article **2002**, and the plate **2001**. In other embodiments, the sealing members **2009-2012** can be fixably attached to the ends of certain the maneuverable jaws **2005-2008** and move radially with the maneuverable jaws **2005-2008**.

[0157] FIG. **21** includes a cross-sectional illustration of an abrasive tool in accordance with an embodiment. The abrasive tool **2100** includes an abrasive article **2102** that is removably coupled within a recess **2134** of a plate **2101**. The abrasive article **2102** can be removable coupled within the recessed **2134** via a coupling mechanism **2103**. The coupling mechanism **2103** can include a fastener **2107** that is config-

ured to be engaged within an opening **2106** of the body of the plate **2101** and correspondingly engaged within an opening **2105** extending into a portion of the substrate **2108** of the abrasive article **2102**. According to the embodiment of FIG. **21**, the fastener **2107** can extend laterally through a portion of the plate **2101** and substrate **2108** to facilitate locking the position of the abrasive article **2102** relative to the plate **2101**. It will be appreciated that more than one fastener **2107** can be used to removably couple the abrasive article **2102** and the plate **2101**. Moreover, while not illustrated, one or more sealing members can be disposed between the abrasive article **2102** and the plate **2101**, such as between the substrate **2108** and an inner surface of the plate **2101** to reduce the likelihood of debris and fluid from entering the recess **2134**. In alternative designs, ridges or other placement members (See, for example, ridges **521** and **523** of FIG. **5**) may be provided within the recess to aid proper placement of the abrasive article **2102** relative to the plate **2101** to facilitate alignment of the openings **2106** and **2105** and engagement of the fastener **2107** therein. It will further be appreciated that while a fastener **2107** is illustrated, other fastening mechanisms such as Allen bolts, nuts, pins, and the like can be used.

[0158] FIG. **22** includes a cross-sectional illustration of an abrasive tool in accordance with an embodiment. The abrasive tool **2200** includes an abrasive article **2202** removably coupled to a plate **2201**. The plate **2201** can include magnet **2209** within the body of the plate **2201**, which facilitates coupling between the abrasive article **2202** and the plate **2201**. The magnet **2209** can have a polarity and strength sufficient to attract the abrasive article **2202**, particularly the substrate **2208** of the abrasive article **2202**, wherein the substrate **2202** can include a material capable of being magnetically attracted to the magnet **2209**, such as a metal or metal alloy. In particular embodiments, the magnet **2209** is oriented at the bottom surface of the plate **2201**, such that it is not surrounded on all sides by the body of the plate **2201** and is accessible from the back surface **2255** of the plate **2201**. This may facilitate removal of the magnet **2209** for maintenance or replacement. Additionally, placement of the magnet **2209** at the back surface **2255** of the plate **2201** can provide adequate distance between the magnet **2209** and the substrate **2208** for coupling. Additionally, the position of the magnet **2209** can provide suitable spacing distance for removal of the abrasive article **2202** from the plate **2201** via a removal magnet (not shown) that can more closely engage and more strongly magnetically attract the substrate **2208**, for decoupling of the abrasive article **2202** from the plate **2201**.

[0159] As further illustrated, the substrate **2208** can have a unique shape, including surfaces **2233** and **2234** that are angled with respect to the upper and lower major surfaces **2223** and **2225** of the substrate **2208**, respectively. The angled surfaces **2233** and **2234** provide a unique shape for complementary engagement with the angled surface **2244** of the substrate. Moreover, the angled surfaces **2233** and **2234** aid effective engagement between the abrasive article **2202** and a sealing member **2207** disposed between the plate **2201** and the abrasive article **2202**. The sealing member **2207** can be a pliable film overlying a surface of the plate **2201** within the recess that is configured to be compressed and deformed upon coupling between the abrasive article **2202** and plate **2201**. As will be appreciated, the sealing member **2207** can be a polymer material, or composite material incorporating a polymer material.

[0160] In accordance with one particular embodiment, the upper and lower major surfaces **2223** and **2225** of the substrate **2208** can include recesses wherein the bonding layers **2213** and **2215** are disposed, respectively. The recesses in the upper and lower major surfaces **2223** and **2225** provide an abrasive article incorporating bonding layers **2213** and **2215** that are secured with greater mechanical force to the substrate **2208** and also provides an abrasive article comprising a smoother profile, with less corners exposed for suitable coupling within the recess **2221** of the plate **2201** to avoid damage to the bonding layers **2213** and **2215** and abrasive grains contained therein.

[0161] FIG. **23** includes a cross-sectional illustration of an abrasive tool in accordance with an embodiment. The abrasive tool **2300** includes an abrasive article **2301** that is removably coupled to a plate **2302**. Notably, the abrasive article **2302** includes a reversible abrasive article as described in accordance with other embodiments, incorporating first and second layers of abrasive grains on opposing first and second major surfaces of a substrate **2308**. The abrasive article **2301** can be coupled within a recess **2334** of the plate **2303**. In particular, the plate **2303** has a unique shape including first and second arms **2310** and **2311** on either side of the recess **2334** and a recess **2307** formed in a back surface **2366** of the plate. The recess **2307** includes a back surface **2308** and openings **2309** extending from the back surface of the recess **2307** through the body of the plate **2302** to a bottom surface **2313** of the recess **2334**. Such a design can facilitate a pressurized coupling mechanism, wherein a reduced pressure atmosphere is provided within the recess **2307** thereby creating a pressure differential or suction force sufficient to hold the abrasive article **2302** within the recess **2334** of the plate **2302**. The reduced pressure atmosphere within the recess **2307** can be provided by use of a vacuum pump that is suitably positioned and sealed with respect to the back surface **2366** of the plate **2302**.

[0162] As further illustrate, the abrasive tool **2300** can further include a sealing member **2305** disposed along an inner surface of the plate **2302** within the recess **2334** and configured to engage the abrasive article **2301**. In particular embodiments, the sealing member **2305** can include a ridge **2306** that protrudes from the body of the sealing member **2305** in a lateral direction into the recess **2334**, such that it is configured to engage the bonding layer **2322** of the abrasive article **2301**. The sealing member **2305** can reduce the penetration of debris and fluids from entering the recess **2334**. The ridge **2306** of the sealing member **2305** can further aid proper placement of the abrasive article **2301** within the recess **2334**, such that the bonding layer **2322** is properly spaced from the bottom surface **2313** of the recess **2334** to avoid damaging the layer of abrasive grains and facilitate formation of an adequate pressurized force to hold the abrasive article **2301** within the recess **2334**.

[0163] FIGS. **24A-24D** include illustrations of a method of using an abrasive article for conducting a CMP pad conditioning operation in accordance with an embodiment. In particular, the following figures demonstrate the reversible nature of the abrasive article, and the coupling arrangement between the abrasive article, the plate, and a holder.

[0164] FIG. **24A** includes a cross-sectional illustration of a holder, a plate, and an abrasive article in accordance with an embodiment. In particular, the abrasive article **2403** is formed according to the embodiments herein, including a first abrasive surface **2404** and a second abrasive surface **2405** on the

first and second major surfaces of a substrate, respectively. The first and second abrasive surfaces **2404** and **2405** can include abrasive texture or a combination of bonding layer and abrasive grains as described in accordance with the embodiments herein.

[0165] The holder **2401** can include a substrate, typically made of a metal or metal alloy material, and having openings **2422** and **2423** extending axially through the thickness of the body for engagement of fasteners **2431** and **2432** therein. The plate **2402** can be disposed between the holder **2401** and the abrasive article **2403** and can include complementary openings **2424** and **2425** extending from a rear surface for engagement of portions of the fasteners **2431** and **2432** therein to directly couple the plate **2402** to the holder **2401**. By contrast, in conventional designs, the holder **2401** is based on a manufacturers standard design, typically integrated with a particular dressing machine, and the fasteners **2431** and **2432** are a common industry standard used to directly affix a pad conditioner to the holder **2401**. The abrasive article **2403** can be removably coupled to the plate **2402**, such that a first abrasive surface **2404** is configured to be exposed and ready to condition a CMP pad. The second abrasive surface **2405** can be located at a surface of the plate **2402** or within the plate **2402**, such as contained within a recess of the plate **2402** as described herein.

[0166] The holder **2401**, plate **2402**, and abrasive article **2403** can be combined to form an abrasive assembly **2409** that is attached to a CMP tool. FIG. **24**B includes a schematic of a CMP tool in accordance with an embodiment. As illustrated, the CMP tool includes a dressing machine **2410** that can include electronic and mechanical systems suitable for conducting the CMP pad dressing processes.

[0167] The abrasive assembly **2409** can be coupled to the dressing machine **2410** in a manner such that the first abrasive surface **2404** is exposed and configured to contact and dress the CMP pad **2411**. During operation, the first abrasive surface **2404** is contacted to a surface of the CMP pad **2411**, which can be moved relative to the first abrasive surface **2404**, and oftentimes, both the CMP pad **2411** and abrasive assembly **2409** are moved relative to each other to achieve suitable conditioning of the CMP pad **2411**. Movement of the first abrasive surface **2404** and CMP pad **2411** can be a rotational motion, such that the CMP pad is rotated as illustrated about one axis **2431** and the abrasive assembly **2409** is rotated about a different axis **2436**, as illustrated. The CMP pad **2411** and abrasive assembly **2409** may be rotated in the same or different directions. Such a process may be conducted regularly and repetitively for one or more CMP pads, until the expected conditioning lifetime of the first abrasive surface **2404** is exhausted. A user may record or track the amount of use or the wear status of the first abrasive surface **2404** using indicia provided on the substrate or by other means described herein.

[0168] During conventional conditioning processes, after the dresser has been thoroughly used and exhausted to its expected conditioning lifetime, the dresser is removed and discarded. However, according to embodiments herein, the abrasive article **2403** can be removed from the plate **2402**, inverted such that the second abrasive surface is exposed, and a subsequent conditioning process may continue using the same abrasive article **2403**.

[0169] Referring to FIG. **24**C, the holder **2401**, plate **2402**, and abrasive article **2403** are illustrated again. Notably, after thorough use of the first abrasive surface **2404**, the abrasive article can be removed from the plate **2402**, inverted as illustrated, and coupled again to the plate **2402**. In this fashion, the second abrasive surface **2405** is exposed, while the first abrasive surface **2404** is unexposed, and the same abrasive article **2403** forms a different abrasive assembly **2415** that is ready for a second, subsequent conditioning procedure. In particular embodiments, inverting the abrasive article can include the removal of only the abrasive article **2403** from the plate **2402**, while the plate **2402** and the holder **2401** remain coupled to the dressing machine **2410**, which facilitates rapid and repetitive conditioning without significant interruptions to the CMP process.

[0170] As illustrated in FIG. **24**D, the abrasive assembly **2415** can be coupled to the dressing machine **2401** such that the second abrasive surface **2405** is exposed and configured to contact and condition a CMP pad **2441**. The CMP pad **2441** can be the same pad as CMP pad **2411**, however, because the life of the conditioners typically exceeds that of a single CMP pad, the CMP pads **2411** and **2441** are likely different. Conditioning operations can be completed using the second abrasive surface **2405** in the same manner as used for the first abrasive surface **2404**, particularly including the movement of the CMP pad **2441** relative to the second abrasive surface **2405**.

[0171] The following description provides additional details of particular abrasive articles including CMP pad conditioners, plates, and holders. The embodiments described in the following provide additional features facilitating removable coupling between the plate and the CMP pad conditioner aiding the use of a reversible CMP pad conditioner. It will be appreciated that the embodiments described in the following include features that can be used in combination with any features of the abrasive articles described herein.

[0172] FIG. **25**A includes a top view of a backside of a plate in accordance with an embodiment. As illustrated, the plate **2501** has a generally circular contour and can have a generally cylindrical three-dimensional shape. The plate **2501** can include a plurality of openings extending axially inward into the body of the plate **2501**. The openings may serve to aid coupling of the plate **2501** with other objects that are part of the CMP conditioning process, including for example, a holder. As described herein, a holder may be part of a standard tool used in the industry to affix CMP pad conditioners thereto for operation with a polishing machine.

[0173] As illustrated, the plate **2501** can include a central opening **2503** extending into the body of the plate **2501**. In particular instances, the opening **2503** can be positioned at the center of the body of the plate **2501** such that it encompasses and is centered about a center point of the plate **2501**. Moreover, the opening **2503** can be formed such that it extends completely through the thickness of the body of the plate **2501** such that it may extend completely between an upper surface and lower surface of the body of the plate **2501**. The opening **2503** may facilitate removal of a CMP pad conditioner from the plate **2501**. In particular, the opening **2503** can provide access for a device or tool to extend through the central opening **2503** from the back surface of the plate **2501** to engage the back surface of the CMP pad conditioner contained within the plate **2501**. The tool may be used to engage and urge the CMP pad conditioner from the plate **2501**. This will be described in more detail in the following embodiments.

[0174] The plate **2501** can further include openings **2507** and **2508** that can be radially spaced apart from a center of the body of the plate **2501** and positioned on opposite sides of the

central opening **2503** from each other. Notably, the openings **2507** and **2508** may be circumferentially spaced apart from each other through an angle of approximately 180 degrees. Such openings **2507** and **2508** may be used to removably couple the plate **2501** with a holder. The openings **2507** and **2508** may contain features configured to be used with fasteners, including for example, threaded surfaces configured for use with a threaded fastener.

[0175] The plate **2501** can further include openings **2505** and **2506** that can be radially spaced apart from the central opening **2503** and positioned on opposite sides of the central opening **2503** from each other. The openings **2505** and **2506** may be circumferentially spaced apart from each other by a particular angle. According to the illustrated embodiment, the openings **2505** and **2506** can be circumferentially spaced apart from each other by an angle of approximately 180°. The openings **2505** and **2506** may be used for coupling of the plate **2501** to a holder, and in particular designs can be formed to have may features configured to be used with fasteners. That is, the openings **2505** and **2506** may have threaded surfaces configured for engagement with fasteners therein to couple the plate **2501** to a holder.

[0176] The plate **2501** can also include openings **2509**, **2510** and **2511**, each of which are radially spaced apart from the central opening **2503**. Additionally, the openings **2509**, **2510**, and **2511** can be positioned within the plate such that they are circumferentially spaced apart from each other. For example, the openings **2509-2511** can be circumferentially spaced apart from each other such that each are separated by a certain angle, such as approximately 120°. The openings **2509-2511** can be used for coupling of the plate **2501** to a holder, and may contain features suitable for coupling the plate **2501** and holder, such as threaded surfaces for engagement of threaded fasteners therein.

[0177] While the plate **2501** can include a plurality of openings, which may be used for coupling of the plate **2501** to a holder, it will be appreciated that not all of the openings may necessarily be used at once for coupling the plate **2501** to other objects, such as a holder. That is, the plate **2501** includes a plurality of openings, each of which are particularly positioned on the plate **2501** such that the plate **2501** can be coupled to various types of holders, wherein different industrial machines may have different styles of holders and thus utilize different configurations of fastening mechanisms. For example, certain holders may utilize three fasteners, in which case, the openings **2509-2511** of the plate **2501** may suffice for coupling of the plate **2501** with the holder. In other instances, certain holders may utilize two fasteners, in which case, the openings **2505** and **2506**, or alternatively **2507** and **2508** may be used to couple the plate **2501** with the holder.

[0178] FIG. **25**B includes a cross-sectional illustration of the plate of FIG. **25**A as viewed through along a plane defined by the axis **2512** in accordance with an embodiment. As illustrated, the plate **2501** includes openings **2506**, **2508**, **2503**, **2507**, and **2505** as described in FIG. **25**A. The openings **2505**, **2506**, **2507**, and **2508** can extend from a rear surface **2514** of the plate **2501** and extend axially along the axial axis **2519** into the body of the plate **2501**. Notably, the openings **2505-2508** may not necessarily extend through the full thickness of the body of the plate **2501** from the rear surface **2514** to the upper surface **2513**. That is, the openings **2505-2508** may extend for a discrete fraction of the total thickness of the body of the plate **2501**. In particular, the openings **2505-2508** can be spaced apart from a bottom surface **2518** of a cavity **2590** formed in the upper surface **2513** of the body of the plate **2501**. As such, in particular embodiments the openings **2505-2508** can be axially spaced apart from, and disconnected from the cavity **2590** formed in the upper surface **2513** of the body of the plate **2501**. This design can assure that fasteners engaged within the openings **2505-2508** may not extend through the body of the plate **2501** to engage objects contained within the cavity **2590**.

[0179] The central opening **2503** can extend through the entire thickness of the body of the plate **2501**. That is, the central opening **2503** can extend from a rear surface **2514** and intersect the bottom surface **2518** of the cavity **2590** formed in the upper surface **2513** of the body of the plate **2501**. As such, the central opening **2503** can extend through the entire thickness of the body of the plate **2501** such that the central opening **2503** and cavity **2508** are connected and the central opening **2503** can provide access to the cavity **2508** from the rear surface **2514** of the plate **2501**.

[0180] The plate **2501** can be formed such that it includes the cavity **2590** formed in the upper surface **2513** of the body of the plate **2501** configured to contain the CMP pad conditioner therein for coupling the CMP pad conditioner and plate during conditioning operations. The cavity **2590** can extend axially inward into the body of the plate **2501**. Moreover, it will be appreciated that the cavity **2590** can define a generally circular opening within the upper surface **2513** of the plate **2501** as viewed in a top down view.

[0181] The cavity **2590** of FIG. **25**B is particularly shaped according to one embodiment. In particular, the cavity **2590** can include cavity portions. Each of the cavity portions can be defined by different surfaces within the cavity **2590** and may be shaped to contain different components of the abrasive tool. For example, the cavity **2590** can include a first cavity portion **2515** that can be a region defined by the surface **2591** extending along the axial axis **2519** generally perpendicular to the upper surface **2513** of the plate **2501**, and a surface **2517** extending generally perpendicular to the axial axis **2519** and the surface **2591**. Notably, the combination of surfaces **2591** and **2517** can form a step or shelf within the body of the plate **2501** and therein defining the first cavity portion **2515** extending axially into the body of the plate **2501**.

[0182] Additionally, the cavity **2590** can include a second cavity portion **2516**, which can be connected to and contiguous with the first cavity portion **2515**. The second cavity portion **2516** can be defined by a surface **2520** extending generally parallel to the axial axis **2519** and connected to the surface **2517**. Moreover, the second cavity portion **2516** can be defined by a bottom surface **2518** extending generally perpendicular to the axial axis **2519**, which may intersect the surfaces of the central opening **2503**. As illustrated, the second cavity portion **2516** can have a smaller width (e.g. diameter) as compared to the first cavity portion **2515**. Such a design may facilitate placement of certain objects within the second cavity portion **2516** separate from objects to be contained within the first cavity portion **2515**. For example, the abrasive tool can be formed such that an abrasive article (e.g., a CMP pad conditioner) can be contained within the first cavity portion **2515** while another object can be contained with the second cavity portion **2516**, such as a pad.

[0183] While the embodiment of FIG. **25**B has illustrated a cavity **2590** including cavity portions defined by different surfaces within the cavity **2590**, in other designs, the cavity may be a simple recess defined by a bottom surface connected

to side surfaces. That is, certain embodiments, may not necessarily employ a cavity having distinct cavity portions.

[0184] FIG. **25**C includes a cross-sectional illustration of a CMP pad conditioner in accordance with an embodiment. The CMP pad conditioner **2521** can include those features as described in previous embodiments. Moreover, the CMP pad conditioner **2521** can have a first major surface **2523** extending parallel to the lateral or radial axis **2524**. The first major surface **2523** can have an abrasive texture as described in accordance with embodiments herein. Additionally, the CMP pad conditioner **2521** can include a second major surface **2524** parallel to the lateral axis **2524** and the first major surface **2523**. The second major surface **2524** can include abrasive texture as described in accordance with embodiments herein. As such, the abrasive article can be a CMP pad conditioner **2521** having abrasive texture on the first major surface **2523** and the second major surface **2524** such that the CMP pad conditioner **2521** can be reversed during operation and both first major surface **2523** and second major surface **2524** may be used for conditioning operations.

[0185] As further illustrated, the CMP pad conditioner **2521** can include a side region **2527** extending between the first major surface **2523** and second major surface **2524**. Notably, the side region **2527** can include a plurality of surfaces which can define an engagement structure aiding coupling between the CMP pad conditioner **2521** to a plate. In particular, the CMP pad conditioner **2521** can include a side region **2527** having a tapered surface **2522**. The tapered surface **2522** can be connected to the first major surface and extend at an angle to the first major surface **2523** and at an angle to the lateral axis **2524** of the CMP pad conditioner **2521**. In particular, the tapered surface **2522** can extend at a taper angle **2526** which can be at least about 1°. In other instances, the taper angle **2526** can be greater, such as at least about 5°, such as at least about 8°, or even at least about 10°. In certain instances, the CMP pad conditioner **2521** is formed such that the taper angle **2526** defined between the tapered surface **2522** and the first major surface **2523** can be within a range between about 1° and about 25°, such as between about 5° and about 20°, such as between about 8° and about 15°.

[0186] As further illustrated and according to embodiments herein, the CMP pad conditioner **2521** can include a plurality of tapered surfaces, each of which can extend between one of the major surfaces and a side surface at the side region **2527**. The tapered surfaces of the CMP pad conditioner aid proper placement and clearance of the CMP pad conditioner **2521** within the plate **2501** and reduce sharp angles, which may damage a pad during a conditioning operation.

[0187] FIGS. **25**D-**25**G include illustrations of side regions of different CMP pad conditioners in accordance with embodiments herein. The following embodiments provide illustrations of different side region designs employing different types, number, and orientations of side surfaces making up the side regions. In particular, the side regions can include a plurality of surfaces configured to engage a sealing member for use with the abrasive tool. It will be appreciated that the features of the following embodiments can extend around an entire periphery (e.g., a circumference) of a CMP pad conditioner between and connecting the major surfaces of the CMP pad conditioner.

[0188] FIG. **25**D includes an illustration of a side region of a CMP pad conditioner in accordance with an embodiment. The side region **2527** includes tapered surfaces **2522** and **2529** that extend at angles relative to the lateral axis **2524**. As further illustrated, the side region **2527** can include a groove **2528** formed by a plurality of distinct side surfaces, and particularly surfaces **2531**, **2532**, and **2533**. The surfaces **2531** and **2532** can be curvilinear surfaces extending from the tapered surfaces **2522** and **2529**, respectively. The surface **2533** extends between and connects the surfaces **2531** and **2532**, and can have a particularly curved surface for complimentary engagement of a sealing member therein. According to certain designs, the surface **2533** can have a concave shape that extends axially inward into the body of the CMP pad conditioner **2521**. Notably, the surfaces **2531**, **2532**, and **2533** form a groove absent sharp corners, which may be particularly suitable for containing pliable members, such as a sealing member, without damaging the sealing member.

[0189] FIG. **25**E includes a cross-sectional illustration of a portion of a side region of a CMP pad conditioner in accordance with an embodiment. In particular, the side region **2534** includes tapered surfaces **2522** and **2529** as described in accordance with embodiments herein. Additionally, the side region **2534** includes a groove **2528** connected to and extending between the tapered surfaces **2522** and **2529** at the side region **2534** of the CMP pad conditioner. The groove **2528** can be a generally concave shape extending radially inward into the body of the CMP pad conditioner. In certain instances, the groove **2528** can be defined by surfaces **2535**, **2536**, **2537**, **2538**, and **2539**. In particular, the surfaces **2535**-**2539** are generally linear surfaces extending parallel or perpendicular to each other and forming right angles with each other. As a result, in the particular illustrated embodiment of FIG. **25**E, the groove **2528** can have a generally rectilinear shape. That is, the surfaces **2535** and **2536** extend generally perpendicular to the lateral axis **2524** and are connected to surfaces **2538** and **2539**, which can extend at a perpendicular angle to the surfaces **2535** and **2536**, parallel to the lateral axis **2524**. Moreover, the surface **2537** can extend between the surfaces **2538** and **2539** in a direction perpendicular to the lateral axis **2524** to form the inner most surface of the groove **2528**.

[0190] FIG. **25**F includes a cross-sectional illustration of a side region of a CMP pad conditioner in accordance with an embodiment. As illustrated, the side region **2540** can include tapered surfaces **2522** and **2529** as described in accordance with embodiments herein. Additionally, the side region **2540** can includes a groove **2528** formed by a combination of surfaces including surface **2541**, surface **2542**, and surface **2543**. The groove **2528** can have a concave portion that extends radially inward into the body fo the CMP pad conditioner. The surface **2541** can be connected to the tapered surface **2522** and have a curvilinear shape, particularly a convex shape that extends radially outward from the body of the CMP pad conditioner. The surface **2541** can be connected to the surface **2543**. The surface **2543** can be connected to the surface **2542**, which like the surface **2541** can have a curvilinear surface that extends radially outward from the body of the CMP pad conditioner. Surface **2542** can be connected to the tapered surface **2529**. As illustrated, in accordance with the embodiment of FIG. **25**F, the groove **2528** has a curvilinear contour defined by surfaces **2541**, **2542**, and **2543**, but the volume of the groove **2528** is less than the grooves illustrated in the embodiments of FIGS. **25**D and **25**E.

[0191] FIG. **25**G includes a cross-sectional illustration of a side region of a CMP pad conditioner in accordance with an embodiment. The side region **2545** includes tapered surfaces **2522** and **2529** as described in accordance with embodiments

herein. Additionally, the side region **2545** can include a groove **2528** having a generally linear contour defined by linear surfaces **2546**, **2546**, **2548**, and **2549**. As illustrated, the surfaces **2546** and **2547** can extend at a generally perpendicular angle to the lateral axis **2524** from respective tapered surfaces **2522** and **2529**. The surfaces **2548** and **2549** can be connected to surfaces **2546** and **2547**, respectively. The surfaces **2548** and **2549** can define a groove **2528** extending radially inward into the body of the CMP pad conditioner. The surfaces **2548** and **2549** can be connected to the surfaces **2546** and **2547** at a generally perpendicular angle and can also be angled relative to the lateral axis **2524**. Additionally, the surfaces **2548** and **2549** are generally linear surfaces extending at an angle to the surfaces **2546** and **2547** respectively. In certain embodiments, the angle formed between the surfaces **2548** and **2549** can be an obtuse angle, that is, an angle greater than about 90 degrees.

[0192] FIG. **26**A includes a conditioning system including a plate and an abrasive article, otherwise referred to as a CMP pad conditioner, in accordance with an embodiment. The conditioning system **2600** can include a holder **2601** which can be configured to be removably coupled to a plate **2501**, which in turn can be removably coupled to a CMP pad conditioner **2521**. The conditioning system of FIG. **26**A is illustrated as including particular components that can be separated from each other prior to assembly of the conditioning system. The assembled version of the conditioning system **2600** is further illustrated in FIG. **26**B.

[0193] The holder **2601** can include a central opening **2603** extending axially into the body of the holder **2601**. The opening **2603** may facilitate coupling of the holder with other objects used during the CMP process which are not illustrated.

[0194] The holder **2601** further can include openings **2602** and **2604** extending into the body from the upper surface **2605** of the holder **2601**. The openings **2607** and **2608** can be radially spaced apart from each other on opposite sides of the central opening **2603** and circumferentially spaced apart from each other. The openings **2607** and **2608** can extend into the body of the holder **2601** from the rear surface **2606** of the holder **2601**. Notably, the opening **2602** can be connected to the opening **2607** such that the combination of openings **2602** and **2607** extend through the entire thickness of the body of the holder **2601** and thus connected to the upper surface **2605** and rear surface **2606**. Likewise, the opening **2604** can be connected to the opening **2608** such that the combination of openings **2604** and **2608** form an opening extending through the entire thickness of the body of the holder **2601** and connecting the upper surface **2605** and rear surface **2606**. It will be appreciated that the openings **2602** and **2604** can have a greater width (e.g. diameter) as compared to their respective connected openings **2607** and **2608**. This design can facilitates engagement of fasteners therein such that the head of a fastener can be contained within and properly positioned within the openings **2602** and **2604**, without necessarily extending into the openings **2607** and **2608**.

[0195] The conditioning system **2600** further includes a plate **2501** having those features as described in FIG. **25**B. As further illustrated in FIG. **26**A, the plate **2501** can include a recess **2611** extending axially into the body of the plate **2501** from the upper surface **2514** of the plate **2501**. The recess **2611** can be formed between the central opening **2503** and opening **2508** within the body of the plate **2501**. Additionally, the plate **2501** can include a recess **2612** extending axially into the body of the plate **2501** from the upper surface **2514** of the plate **2501**. The recess **2612** can be positioned between the central opening **2503** and opening **2507**. It will be appreciated that the recess **2611** and recess **2612** can be connected and define a single recess extending circumferentially around the central opening **2503**. According to certain embodiments, the recesses **2611** and **2612** can be a single, annular-shaped recess extending around the central opening **2503**.

[0196] In particular, the conditioning system **2600** can be formed such that a sealing member **1613** can be disposed within the recess **2611** and **2612** during assembly (See, FIG. **26**B). Notably the sealing member **1613** can be a single, monolithic piece, such as an O-ring. As such, the sealing member **2613** can be seated within the recesses **2611** and **2612**, which as described herein can describe an annular-shaped recess. The sealing member **2613** can be provided within the recesses **2611** and **2612** for sealing the central opening **2503** from fluids and/or swarf generated during conditioning operations.

[0197] The conditioning system **2600** can further include a member **2610** configured to be positioned within the cavity **2690** formed within the upper surface **2513** of the plate **2501**. Notably, unlike the embodiment of FIG. **25**B, the cavity **2690** may not necessarily include discrete cavity portions. Rather, the cavity **2690** can be an opening extending axially inward into the body of the plate **2501**. The cavity **2690** can be defined by a surface **2691** extending radially inward perpendicular to the upper surface **2513** of the plate **2501**. Additionally, the cavity **2690** can be defined by a bottom surface **2692** connected to the surface **2691** and extending at a generally perpendicular angle to the surface **2691** and in a generally parallel direction to the upper surface **2514** of the plate **2501**.

[0198] The member **2610** can be sized and shaped such that it is configured to be positioned within the cavity **2690** during assembly of the conditioning system **2600**. In accordance with embodiments herein, the member **2610** can be a protective layer or pad of material similar to the protective layer **261** described herein. That is, for example, the member **2610** can be made of a polymer material, such as a thermoset, thermoplastic, resin, elastomer, and a combination thereof. The member **2610** can protect the abrasive texture of the CMP pad conditioner **2521** when it is assembled within the conditioning system, particularly within the cavity **2690** of the plate **2501**.

[0199] The conditioning system further includes a CMP pad conditioner **2521** that may be combined with a sealing member **2609** in accordance with an embodiment. Notably, the sealing member **2609** may be positioned within the groove **2528** of the CMP pad conditioner **2521** to facilitate sealing between the plate **2501** and CMP pad conditioner **2521**. The sealing member can be a pliable material, such as a polymer material, and particularly a thermoset, thermoplastic, elastomer, resin, or a combination thereof.

[0200] FIG. **26**B includes a cross-sectional illustration of the conditioning system of FIG. **26**A after assembly in accordance with an embodiment. As illustrated, the holder **2601** can overly and can be directly connected to the plate **2501**. The CMP pad conditioner **2521** can be removably coupled to the plate **2501** such that it is contained within the cavity **2690**. Notably, in the assembled form, the rear surface **2606** of the holder **2601** can be directly connected to the upper surface **2514** of the plate **2501**. Moreover, the opening **2607** of the holder **2601** can be axially aligned with the opening **2506** of the plate **2501** such that a fastener **2631** can be placed within

the opening **2602** and extend through opening **2607** of the holder **2601** into the opening **2506** of the plate **2501** to couple the holder **2601** and plate **2501** to each other. Additionally, the opening **2608** can be axially aligned with the opening **2505** such that a fastener **2630** can be placed within the opening **2604** and extend through the openings **2608** and **2505** to couple the holder **2601** and plate **2501** to each other.

[0201] As further illustrated, the sealing member **2613** can be contained within the recesses **2611** and **2612** between the rear surface **2606** of the holder **2601** and upper surface **2514** of the plate **2501**. The sealing member **2613** can engage the surfaces of the recesses **2611** and **2612** and the rear surface **2606** of the holder **2601** to form a seal and reduce the likelihood of fluids and/or swarf from entering the center opening **2503**.

[0202] As further illustrated in FIG. **26**B, the member **2610** can be contained within the cavity **2690** such that a major surface of the member **2610** can be abutting the bottom surface **2692** of the cavity **2690**. Additionally, the opposite major surface of the member **2610** can be abutting a major surface of the CMP pad conditioner **2521** to protect the abrasive texture from damage while contained within the cavity **2590**. As further illustrated, in the assembled form, the CMP pad conditioner **2521** can be contained within cavity **2690**, such that a major surface of the CMP pad conditioner **2521** is abutting the member **2610**, and the opposite major surface of the CMP pad conditioner **2521** is protruding from the plate **2501**. The major surface of the CMP pad conditioner **2521** protruding from the plate **2501** can extend in an axial direction beyond the plane defined by the upper surface **2513** of the plate **2501**. As such, the major surface of the CMP pad conditioner **2521** is placed in a position to accomplish conditioning and the upper surface **2513** of the plate **2501** can be spaced apart from the pad during a conditioning operation.

[0203] After sufficient use of the abrasive article, disassembly of the conditioning system **2600** can be initiated by a user removing fasteners **2631** and **2630** from respective openings to decouple the holder **2601** and plate **2501**. After removing the fasteners **2631** and **2630**, the plate **2501** and CMP pad conditioner **2521** may still be coupled to each other. To remove the CMP pad conditioner **2521** from the plate **2501**, the user may use an object or tool (e.g., a fastener) to extend through the central opening **2503** from the rear surface **2514** of the plate **2501** in the direction **2680**. The object can be extended in the direction **2680** through the central opening **2503** until the object abuts the rear surface of the member **2610** or CMP pad conditioner **2521**. Applying sufficient force in the direction **2680** can facilitate removal of the CMP pad conditioner **2521** from the cavity **2590** of the plate **2501**.

[0204] Depending upon the wear status of the CMP pad conditioner **2521**, the CMP pad conditioner **2521** may be reversed, such that the opposite major surface and the corresponding abrasive texture on the opposite major surface is positioned to protrude from the plate **2501**. Upon reorienting the CMP pad conditioner **2521**, the conditioner can be coupled with the plate **2501** in the cavity **2590** and used to continue the dressing operation. After flipping the CMP pad conditioner **2521**, fasteners **2630** and **2631** may be positioned within respective openings to couple the holder **2601** and plate **2501** and complete reassembly of the conditioning system **2600**.

[0205] FIGS. **27**A-**27**C include cross-sectional illustrations of portions of a CMP pad conditioner and plate in accordance with an embodiment. Notably, the following embodiments of FIGS. **27**A-**27**C demonstrate various engagement structures and coupling mechanisms that can be employed with any of the embodiments herein to achieve removable coupling between a CMP pad conditioner and a plate. In such embodiments, the CMP pad conditioner and the plate can utilize various engagement structures have certain surface contours, sealing members, biasing members, and a combination thereof to facilitate removable coupling between the CMP pad conditioner and plate. In particular, the following embodiments of FIGS. **27**A-**27**C can include various coupling mechanisms for use between the CMP pad conditioner and plate, generally at the region **2695** illustrated in FIG. **26**B.

[0206] FIG. **27**A includes a cross-sectional illustration of a portion of a CMP pad conditioner and plate in accordance with an embodiment. In particular, the embodiment of FIG. **27**A includes an illustration of a particular engagement structure utilizing particular coupling surfaces and a sealing member to facilitate removable coupling between the CMP pad conditioner **2521** and the plate **2501**. In particular, the plate **2501** includes an arm **2762** extending axially from the body of the plate **2501** and defining a cavity **2590** for engagement of the CMP pad conditioner **2521** as described in embodiments herein. In particular, the arm **2762** can include a flange **2701** extending radially inward at a generally perpendicular angle to the arm **2762**.

[0207] The arm **2762** can have a groove **2790** (i.e., a plate groove) defined within an interior surface **2705**. In particular, the groove **2790** can be formed by a surface **2702**, which is connected to and extending at a generally perpendicular angle to the interior surface **2705**. The groove **2790** can further be defined by a surface **2703** connected to the and extending at a generally perpendicular angle to the surface **2702**. Moreover, the groove **2790** can further be defined by a surface **2704** connected to and extending at a generally perpendicular angle to the surface **2703**. The surfaces **2704** and **2702** can be generally parallel to each other. As such, the surfaces **2702**, **2703**, and **2704** can define a groove **2790** within the inner surface **2705** of the arm **2762** having a generally rectilinear contour.

[0208] As further illustrated, a sealing member **2609** can be contained within the groove **2790** when the CMP pad conditioner and plate **2501** are assembled. As further illustrated, in the assembled position, the CMP pad conditioner **2521** is configured to abut and contact the sealing member **2609** contained within the groove **2790** of the plate **2501**. Notably, the sealing member **2609** is positioned such that a majority of the volume of the sealing member **2609** is contained within the groove **2790** and only a fraction of the surface of the sealing member **2609** is contacted by the groove **2528** of the CMP pad conditioner **2521**. Accordingly, in the assembled state, the CMP pad conditioner **2521** can be contained within the cavity **2590** and the groove **2528** of the CMP pad conditioner **2521** can be abutting the sealing member **2609** contained within the groove **2790**. It will be appreciated, that in the assembled state, the sealing member may be deformed in a manner to allow some contact between the CMP pad conditioner **2521** and arm **2762** of the plate **2501**, however, this may not necessarily always be the case. Such a configuration facilitates removable coupling of the CMP pad conditioner **2521** with the plate **2501** and further facilitates sealing of the connection between the CMP pad conditioner **2521** and plate **2501**.

[0209] FIG. **27**B includes a cross-sectional illustration of a portion of the CMP pad conditioner **2521** and a plate **2501** and particularly the engagement structure used for removable coupling between the CMP pad conditioner **2521** and plate **2501**. As illustrated, the CMP pad conditioner **2521** can have a groove **2528** extending radially into the body of the CMP pad conditioner **2521** for engagement of a sealing member **2609** therein. Unlike the embodiment of FIG. **27**A, the embodiment of FIG. **27**B is formed such that a majority of the volume of the sealing member **2609** is contained within a groove **2528** formed within the CMP pad conditioner **2521**.

[0210] As further illustrated, the plate **2501** can include an arm **2762** extending axially outward from the body of the plate **2501** aiding the formation of the cavity **2590** within the plate **2501**. The arm **2762** can include a flange portion **2721** proximate to the upper surface **2513** and extending radially inward. The flange portion **2721** is configured to engage a portion of the sealing member **2609** in the assembled state. The flange **2721** can include a first surface **2722** extending at an angle from the upper surface **2513**, a surface **2723** connected to and extending at an angle to the surface **2722** and generally perpendicular to the upper surface **2513**, and a surface **2724** connected to and extending at an angle to the surface **2723** to form the radially inward protruding flange portion **2721**.

[0211] During assembly the CMP pad conditioner **2521** having the sealing member **2609** contained within the groove **2528** can be fitted into the plate **2501** such that the sealing member **2609** extends beyond and axially inward and radially outward of the flange portion **2721**. In the assembled state as illustrated, the sealing member **2609** can be abutting the surface **2724** of the flange portion and the inner surface **2705** of the arm **2762**.

[0212] As illustrated, the surfaces of the CMP pad conditioner **2521** can be spaced apart from the surfaces of the plate **2501**, such that the sealing member **2609** maintains the connection between the plate **2501** and the CMP pad conditioner **2521**. However, in certain instances, the surface **2725** of the CMP pad conditioner **2521** may engage and abut a surface of the plate **2501**, particularly the surface **2723** of the flange portion **2721**. It will be appreciated, that during assembly and disassembly, the sealing member **2609** can be deformed, such that the it can axially translate by the flange portion **2721** and particularly by the surface **2723** of the flange portion. The sealing member **2609** may further be formed and positioned such that it is deformed while the CMP pad conditioner **2521** is engaged within the cavity **2590** of the plate **2501**.

[0213] FIG. **27**C includes a cross-sectional illustration of a portion of a CMP pad conditioner **2521** and plate **2501** in particularly engagement structures utilized for removable coupling of the CMP pad conditioner **2521** and plate **2501**. As illustrated, the plate **2501** can be formed such that it has a recess **2780** extending axially inward into the arm **2762** of the plate **2501** from the upper surface **2513** of the plate **2501**. The recess **2780** can be defined as a space between arm portions **2737** and **2731** that can extend axially outward as protrusions or tines on either side of the recess **2780**.

[0214] In accordance with one embodiment, the recess **2780** can be formed to contain a resilient member **2733**. The resilient member **2733** can be a generally U-shaped member configured to fit the contours of the recess **2780** and bias the arms **2737** and **2731** into biased positions away from each other. As illustrated, the resilient member **2733** can be configured to extend along and have generally the same contour as the inner surface of the recess **2780**, that is, a U-shaped contour. Moreover, in certain embodiments, the recess **2780** may be filled with a pliable material **2732**. Suitable pliable materials can include organic or inorganic materials or a combination thereof. In certain instances, the pliable material **2732** can be a polymer, such as an elastomer. Use of the pliable material **2732** within the recess **2780** can provide additional resiliency against the movement of the arm **2737** in the direction **2736** toward the arm **2731**.

[0215] As further illustrated, the recess **2780** can be formed with flanges **2735** and **2734** extending toward each other. The flanges **2734** and **2735** can be formed to facilitate containing the resilient member **2733** and pliable material **2732** within the recess **2780**.

[0216] As further illustrated, the arm **2737** can be formed such that is has a surface **2738** extending between an inner surface **2739** and upper surface **2513** of the plate **2501**. The surface **2738** can have a curved contour and be formed to engage a portion of the CMP pad conditioner **2521** during assembly between the pad conditioner **2521** and plate **2501**. In particular instances, the CMP pad conditioner **2521** can be formed such that it has a groove **2528** that is configured to engage and abut the surface **2738** of the arm **2737** during assembly. For example, in the assembled form as illustrated, the groove **2528** can be formed to include a surface **2742** configured to engage an edge between the surface **2738** and surface **2739** of the plate **2501**. That is, during assembly, the CMP pad conditioner **2521** can be placed within the cavity **2590** until the arm **2737** is sufficiently moved in the direction **2736** such that the surface **2742** of the CMP pad conditioner **2521** is engaged with and abuts the joint between the surface **2738** and inner surface **2739** of the arm portion **2737**.

[0217] Removal of the CMP pad conditioner **2521** from the plate **2501** can include application of force to the back side of the CMP pad conditioner **2521** sufficient to urge the arm **2737** in a direction **2736** for sufficient clearance of the surface **2742** past the surface **2738** of the arm portion **2737** thus releasing the CMP pad conditioner **2521** from the cavity **2590**.

[0218] As further illustrated, the inner surface **2739** of the plate **2501** can be formed to have a gap **2740** formed between a bottom surface **2518** of the cavity **2590** within the plate **2501** and a surface of the member **2610**. Such a gap **2740** may provide additional flexure of the arm **2737** for suitable removable coupling between the CMP pad conditioner **2521** and plate **2501**. Moreover, use of a polymer material for making the plate **2501** may further aid the flexural nature of the arm portion **2737**.

[0219] FIG. **28**A includes a top view illustration of a backside of a plate in accordance with an embodiment. The plate **2801** can have a generally circular contour, and a cylindrical three-dimensional shape. As illustrated, the plate **2801** can include a central opening **2503**, and openings **2505**, **2506**, **2507**, and **2508** as described in embodiments herein. Moreover, the plate **2801** can include openings **2509**, **2510**, and **2511** as described in accordance with embodiments herein.

[0220] As further illustrated, the plate **2801** can include recesses **2861**, **2862**, and **2863** radially spaced apart from a center of the body and circumferentially spaced apart from each other around a center of the body of the plate **2801**. The recesses **2861-2863** can extend axially into the body of the plate **2801** for a sufficient depth to contain certain objects therein. Notably, the recesses **2861-2863** can be equilaterally spaced apart such that approximately 120° separate the centers of the recesses **2861-2863**.

[0221] In accordance with an embodiment, the recesses **2861-2863** can include magnets **2807**, **2808**, and **2809** contained within the recesses **2861-2863**. It will be appreciated that use of magnets **2807-2809** within the body of the plate **2801** can be used to facilitate magnetic coupling between the plate **2801** and a CMP pad conditioner for removable coupling between the plate **2801** and CMP pad conditioner. As described herein, for such designs, the CMP pad conditioner may utilize a metal portion to aid magnetic coupling with the magnets **2807-2809**.

[0222] As further illustrated, the plate **2801** can include a cavity as defined by dotted line **2805** having a generally circular contour. However, the cavity **2805** is formed to include a flat portion **2802**, a flat portion **2803** and a flat portion **2804** within and extending along portions of the circumference of the cavity **2805**. That is, the arcuate and generally circular surface of the cavity **2805** is interrupted at specific locations along the circumference by flat portions **2802-2804**. The flat portions **2802-2804** are linear surface portions interrupting the generally curved surface of the cavity **2805**. The flat portions **2802-2804** can facilitate proper coupling between the plate **2801** and a CMP pad conditioner, lessening the likelihood of rotation of the CMP pad conditioner within the plate **2801** during operation.

[0223] FIG. **28**B includes a cross-sectional illustration of a portion of the plate **2801** of FIG. **28**A as viewed along a plane defined by the axis **2812**. The plate **2801** can include a recess **2861** extending axially into the body of the plate **2801** and configured to contain a magnet **2807** therein. As further illustrated, the plate **2801** can be formed to include recesses **2822** and **2821** similar to those recesses described in accordance with FIG. **26**A and FIG. **26**B for containing a sealing member therein and sealing the plate **2801** against a holder.

[0224] As further illustrated, the plate **2801** can be formed to include a cavity **2824** extending axially inward into the body of the plate **2801**. The cavity can be defined by a surface **2829** extending perpendicular to the upper surface **2830** of the plate **2801** and a bottom surface **2828** extending generally perpendicular to the axially axis **2866** and substantially parallel to the upper surface **2830** of the plate **2801**. Moreover, the cavity **2824** can be contiguous with and connected to the central opening **2503** of the plate **2801** such that the central opening **2503** extends through the entire thickness of the plate **2801** along the axially axis **2866**.

[0225] During assembly, a member **2834**, which can be a protective layer or pad, can be inserted within the cavity **2824** such that a rear surface **2836** of the member **2834** abuts and is connected to the bottom surface **2828** of the cavity **2824**. Additionally, during assembly a CMP pad conditioner **2831** having a first major surface **2832** and second major surface **2833**, each of which can have abrasive texture, can be placed with the cavity **2824** of the plate **2801**. Notably, the surface **2832** of the CMP pad conditioner **2831** can abut and be directly connected to an upper surface **2835** of the member **2834** when the CMP pad conditioner **2831** is contained within the cavity **2824** of the plate **2801**. It will be appreciated, that while the CMP pad conditioner **2831** is illustrated as having a generally rectangular shape, it can include any features as described in accordance with CMP pad conditioners of the embodiments herein.

[0226] During disassembly of the CMP pad conditioner **2831** from the plate **2801**, a user may insert an object (e.g., a fastener, an elongated tool, or hand) within the central opening **2503** of the plate **2801** to engage the member **2834**, or alternatively the rear surface **2832** of the CMP pad conditioner **2831**. Force may be applied to the member **2834** or CMP pad conditioner **2831** to urge the CMP pad conditioner in a direction **2870** and thus magnetically decouple the CMP pad conditioner **2831** from the magnets **2807-2809**, and removably couple the CMP pad conditioner **2831** from the plate **2801**.

[0227] FIG. **28**C includes a top view illustration of a plate and CMP pad conditioner coupled to each other in accordance with an embodiment. Notably, the illustration of FIG. **28**C includes a CMP pad conditioner coupled to the plate of FIG. **28**A. As illustrated, the plate **2801** includes flat portions **2802**, **2803**, and **2804**, defined by linear surface regions at the circumference of the cavity configured to contain the CMP pad conditioner **2831**. Moreover, the CMP pad conditioner **2831** can include complimentary flat potions **2842**, **2843**, and **2844** defined by linear surface regions at the circumference of the CMP pad conditioner **2831** configured to directly contact and abut the flat portions **2802**, **2803**, and **2804** of the plate **2801**. Such an arrangement reduces the likelihood of rotation of the CMP pad conditioner **2831** within the plate **2801** during operation.

[0228] FIG. **29** includes a top view illustration of an abrasive tool in accordance with an embodiment. The foregoing embodiments have been directed to abrasive articles utilizing a CMP pad conditioner that is removably coupled to a plate. However, it is also contemplated that a single plate may be used with a plurality of CMP pad conditioners. In particular, an abrasive tool may employ a plurality of CMP pad conditioners removably coupled to a single plate, wherein the plate has a plurality of recesses or cavities to accommodate and removably couple each of the CMP pad conditioners therein.

[0229] The abrasive tool **2900** can include a plate **2901** including those features described in accordance with plates of the embodiments herein. For example, the plate **2901** can have a circular contour as viewed in a top view, and a generally cylindrical three-dimensional shape. The plate **2901** can include a plurality of other openings (not illustrated) extending into the body and configured to aid coupling of the plate **2901** with another object, such as a holder.

[0230] The plate **2901** can include cavities **2911**, **2912**, **2913**, and **2914** (**2911-2914**) within the upper surface of the plate **2901** that extend axially inward into the body of the plate **2901**. The cavities **2911-2914** can be positioned at particular locations within the upper surface of the plate **2901**, and in particular, may be arranged in a pattern around a center of the plate **2901** for proper balance during conditioning operations. The cavities **2911** and **2913** can be radially spaced apart from the center of the plate **2901**, but can be positioned along an axis **2908** and circumferentially spaced apart from each other by an angle of approximately 180 degrees. Likewise, the cavities **2912** and **2914** can be radially spaced apart from a center of the plate, but can be positioned along an axis **2909** such that the cavities **2912** and **2914** can be circumferentially spaced apart from each other by an angle of approximately 180 degrees.

[0231] Each of the cavities **2911-2914** can be formed to contain a respective CMP pad conditioner **2915**, **2916**, **2917**, and **2918**. As such, the cavities **2911-2914** can include features of the embodiments herein to facilitate removable coupling between the plate **2901** and the CMP pad conditioners **2915-2918**. Additionally, the CMP pad conditioners **2915-2918** can include features of the embodiments herein to facilitate removable coupling between the plate **2901** and the

respective CMP pad conditioner. Notably, the CMP pad conditioners **2915-2918** are reversible, such that each of the CMP pad conditioners **2915-2918** has abrasive texture on first and second major surfaces of the substrate.

[0232] While the embodiment of FIG. **29** has illustrated a plate **2901** having four cavities **2911-2914**, which are configured to contain four distinct and separate CMP pad conditioners **2915-2918**, such an embodiment is not intended to be limiting on the number of cavities and CMP pad conditioners that may be included on a single plate. Other embodiments may employ a plate having only 2 cavities. While other embodiments may utilize a plate having a different number of cavities (and a corresponding number of CMP pad conditioners) such as at least about 3 cavities, at least about 4 cavities, at least about 6 cavities, at least about 10 cavities, at least about 16 cavities, at least about 24 cavities, or even at least about 30 cavities. In particular, any number of cavities may be utilized, typically such that the number of cavities is a multiple or two.

[0233] As further illustrated, the plate **2901** can be formed to have an opening **2921** within the cavity **2911**, an opening **2922** within the cavity **2912**, an opening **2923** within the cavity **2913**, and an opening **2924** within the cavity **2914**. The openings **2921-2924** can be formed in the rear surface of the plate **2901** and extend axially into the body of the plate **2901**. As illustrated, the openings **2921-2924** can be formed to extend from the back surface to a bottom surface of the respective cavities, such that the openings allow a user to access a CMP pad conditioner contained within a cavity from the back surface of the plate **2901**. Such a design facilitates removable coupling between the CMP pad conditioners **2915-2918** and the plate **2901**. An operator can use a tool extended through one of the openings **2921-2924** from the rear surface of the plate **2901** to access and force a CMP pad conditioner from a corresponding cavity and aid removal of the CMP pad conditioner from the cavity. The design relationships between the openings **2921-2924** and the cavities **2911-2914** is substantially the same as the design between the central opening **2503** and cavity **2590** illustrated in FIG. **25**B.

[0234] The embodiments herein are directed to a method of forming an abrasive tool including reversible abrasive articles having first and second layers of abrasive grains on first and second major surfaces of the substrate. The abrasive tools can include a combination of features including coupling mechanisms including engagement structures on the abrasive article and engagement structures or coupling surfaces on the plate for removably coupling the two components. Other features according to the embodiments include superior flatness, dual abrasive surfaces having different polishing capabilities, particular shapes of components, sealing members, biasing members, particular materials, collet members, magnets, indicia indicating the wear status of the different layers of abrasive grains, and protective layers. Notably, the abrasive tools herein include a combination of elements that make use of reversible CMP pad conditioners having improved lifetime and a variety of capabilities to improve the conditioning process.

[0235] In the foregoing, reference to specific embodiments and the connections of certain components is illustrative. It will be appreciated that reference to components as being coupled or connected is intended to disclose either direct connection between said components or indirect connection through one or more intervening components as will be appreciated to carry out the methods as discussed herein. As such, the above-disclosed subject matter is to be considered illustrative, and not restrictive, and the appended claims are intended to cover all such modifications, enhancements, and other embodiments, which fall within the true scope of the present invention. Thus, to the maximum extent allowed by law, the scope of the present invention is to be determined by the broadest permissible interpretation of the following claims and their equivalents, and shall not be restricted or limited by the foregoing detailed description.

[0236] The Abstract of the Disclosure is provided to comply with Patent Law and is submitted with the understanding that it will not be used to interpret or limit the scope or meaning of the claims. In addition, in the foregoing Detailed Description of the Drawings, various features may be grouped together or described in a single embodiment for the purpose of streamlining the disclosure. This disclosure is not to be interpreted as reflecting an intention that the claimed embodiments require more features than are expressly recited in each claim. Rather, as the following claims reflect, inventive subject matter may be directed to less than all features of any of the disclosed embodiments. Thus, the following claims are incorporated into the Detailed Description of the Drawings, with each claim standing on its own as defining separately claimed subject matter.

1. An abrasive tool comprising:
a CMP pad conditioner including:
- a substrate having a first major surface and a second major surface opposite the first major surface;
- a first layer of abrasive grains attached to the first major surface;
- a second layer of abrasive grains attached to the second major surface; and
- a first indicia on the substrate corresponding to the first major surface and identifying a wear status of the first layer of abrasive grains.

2-6. (canceled)

7. The abrasive tool of claim **1**, wherein the first major surface of the substrate further comprises a first bonding layer and the first layer of abrasive grains are contained within the first bonding layer.

8. The abrasive tool of claim **7**, wherein the first bonding layer comprises a material selected from the group of materials consisting of metals, polymers, ceramics, and a combination thereof.

9. The abrasive tool of claim **8**, wherein the first bonding layer comprises a metal.

10. (canceled)

11. The abrasive tool of claim **8**, wherein the first bonding layer is a polymer material.

12-19. (canceled)

20. The abrasive tool of claim **1**, wherein the abrasive grains of the first layer of abrasive grains are different than the abrasive grains of the second layer of abrasive grains.

21. The abrasive tool of claim **1**, wherein the abrasive grains of the first layer have an average grit size that is less than 250 microns.

22. The abrasive tool of claim **21**, wherein the abrasive grains of the second layer of abrasive grains have a same average grit size of the abrasive grains of the first layer of abrasive grains.

23. The abrasive tool of claim **1**, wherein the first layer of abrasive grains are arranged in a self avoiding random distribution.

24. The abrasive tool of claim **23**, wherein the second layer of abrasive grains are arranged in a same distribution as the first layer of abrasive grains.

25-30. (canceled)

31. An abrasive tool comprising:

a CMP pad conditioner including:

a substrate having a first major surface, a second major surface opposite the first major surface, and a side surface extending between the first major surface and the second major;

a first layer of abrasive grains attached to the first major surface;

a second layer of abrasive grains attached to the second major surface; and

a first sealing member extending in a peripheral direction along a portion of the side surface of the substrate.

32. The abrasive tool of claim **31**, wherein the first sealing member comprises a deformable member.

33-34. (canceled)

35. The abrasive tool of claim **31**, wherein the first sealing member is disposed within a recess along a portion of the side surface.

36. The abrasive tool of claim **31**, further comprising a second sealing member extending in a peripheral direction along a portion of the side surface and spaced apart from the first sealing member.

37. (canceled)

38. The abrasive tool of claim **31**, wherein the substrate comprises an engagement structure.

39. The abrasive tool of claim **38**, wherein the engagement structure comprises a protrusion extending from the side surface of the substrate.

40-48. (canceled)

49. The abrasive tool of claim **38**, further comprising a collet member coupled to the substrate at the engagement structure.

50. (canceled)

51. The abrasive tool of claim **49**, wherein the collet member comprises an engagement structure configured to be coupled to a plate.

52-89. (canceled)

90. An abrasive tool for use as a CMP pad conditioner comprising:

a plate; and

an abrasive article comprising:

a substrate having a first major surface and a second major surface opposite the first major surface;

a first layer of abrasive grains attached to the first major surface;

a second layer of abrasive grains attached to the second major surface; and

wherein the plate and abrasive article are removably coupled via a coupling mechanism.

91. The abrasive tool of claim **90**, wherein the coupling mechanism includes an engagement structure attached to the abrasive article.

92. The abrasive tool of claim **90**, wherein the coupling mechanism includes a coupling surface on the plate.

93. The abrasive tool of claim **90**, wherein the engagement structure includes a structure selected from the group of structures consisting of latches, fasteners, clamps, interference fit connections, and a combination thereof.

94-99. (canceled)

100. An abrasive tool for use as a CMP pad conditioner comprising:

an abrasive article comprising:

a substrate having a first major surface and a second major surface opposite the first major surface;

a first layer of abrasive grains attached to the first major surface;

a second layer of abrasive grains attached to the second major surface;

a plate comprising a magnet for removably coupling the plate and abrasive article.

101. The abrasive tool of claim **100**, wherein the plate comprises a body and includes at least one magnet embedded within the body.

102. The abrasive tool of claim **100**, wherein the substrate comprises a metal material configured to magnetically couple to the magnet of the plate.

103-145. (canceled)

146. A method of dressing a CMP pad comprising:

coupling an abrasive article to a dressing machine, the abrasive article comprising a substrate having a first major surface and a second major surface opposite the first major surface, wherein the abrasive article comprises a first abrasive surface at the first major surface of the substrate, and a second abrasive surface at the second major surface of the substrate, and wherein the abrasive article is mounted on the dressing machine to expose the first abrasive surface;

contacting the first abrasive surface to a surface of a first CMP pad and moving the first CMP pad relative to the first abrasive surface to condition the first CMP pad;

inverting the abrasive article to expose the second abrasive surface; and

contacting the second abrasive surface to a surface of a second CMP pad and moving the second CMP pad relative to the second abrasive surface to condition the second CMP pad.

147-148. (canceled)

149. The method of claim **146**, wherein coupling the abrasive article to a dressing machine comprises removably coupling the abrasive article to a plate, wherein the plate is directly coupled to the dressing machine.

150-151. (canceled)

152. The method of claim **149**, wherein inverting the abrasive article comprises:

removing the abrasive article from the plate;

inverting the abrasive article; and

coupling the abrasive article to the plate, wherein the second abrasive surface is exposed to conduct a conditioning operation.

153. The method of claim **152**, wherein during removing the abrasive article from the plate, the plate remains coupled to the dressing machine.

154. The method of claim **146**, wherein the first abrasive surface is used for an expected conditioning lifetime before the abrasive article is inverted.

155-177. (canceled)

* * * * *