US007717756B1

(12) **United States Patent**
Yin et al.

(10) **Patent No.: US 7,717,756 B1**
(45) **Date of Patent: May 18, 2010**

(54) **PROBE CONNECTOR**

(75) Inventors: **Te-Hung Yin**, Taipei (TW); **Yung-Yi Chen**, Taipei (TW); **Shu-Fang Li**, Taipei (TW); **Jui-Pin Lin**, Taipei (TW)

(73) Assignee: **Cheng Uei Precision Industry Co., Ltd.**, Taipei (TW)

(*) Notice: Subject to any disclaimer, the term of this patent is extended or adjusted under 35 U.S.C. 154(b) by 0 days.

(21) Appl. No.: **12/499,803**

(22) Filed: **Jul. 9, 2009**

(51) **Int. Cl.**
H01R 13/24 (2006.01)

(52) **U.S. Cl.** **439/700**

(58) **Field of Classification Search** 439/700, 439/824
See application file for complete search history.

(56) **References Cited**

U.S. PATENT DOCUMENTS

6,340,320 B1 * 1/2002 Ogawa 439/824
7,021,976 B2 * 4/2006 Sekiguchi 439/824
7,201,613 B2 * 4/2007 Sasaki 439/700
7,435,109 B1 * 10/2008 Sugiura 439/83
2004/0266272 A1 * 12/2004 Maruyama et al. 439/700
2006/0172613 A1 * 8/2006 Sasaki 439/824
2009/0093171 A1 * 4/2009 Ju 439/824

* cited by examiner

Primary Examiner—Gray F. Paumen

(57) **ABSTRACT**

A probe connector has a barrel having a main body which defines a chamber therein, and a base connected with one end of the main body. The main body has an opening at a middle portion thereof. A plunger is mounted to the barrel and partly exposes from the other end of the main body. A wrapping element surrounds an outer periphery of the main body. A resting element has a resting portion of arc shape, and two fixing slices extended opposite to each other from two ends of the resting portion. The resting portion projects into the chamber of the barrel through the opening. The fixing slices are sandwiched between the barrel and the wrapping element. The resting portion rests against a side of the plunger when the plunger is pressed downwards to deflect to contact an inner surface of the main body by an opposite side thereof.

8 Claims, 5 Drawing Sheets

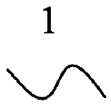

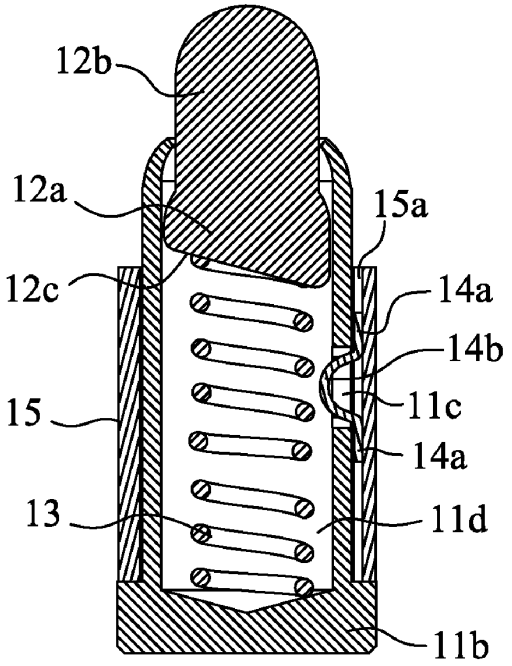

NJOY Exhibit 1009.001

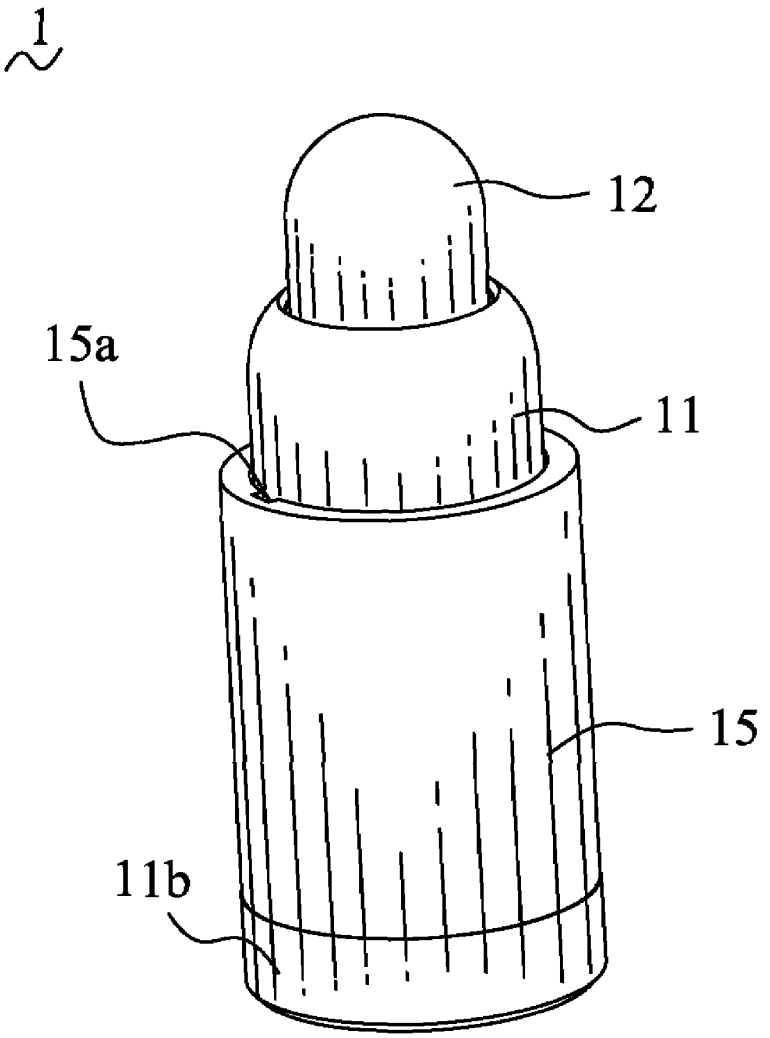

FIG. 1

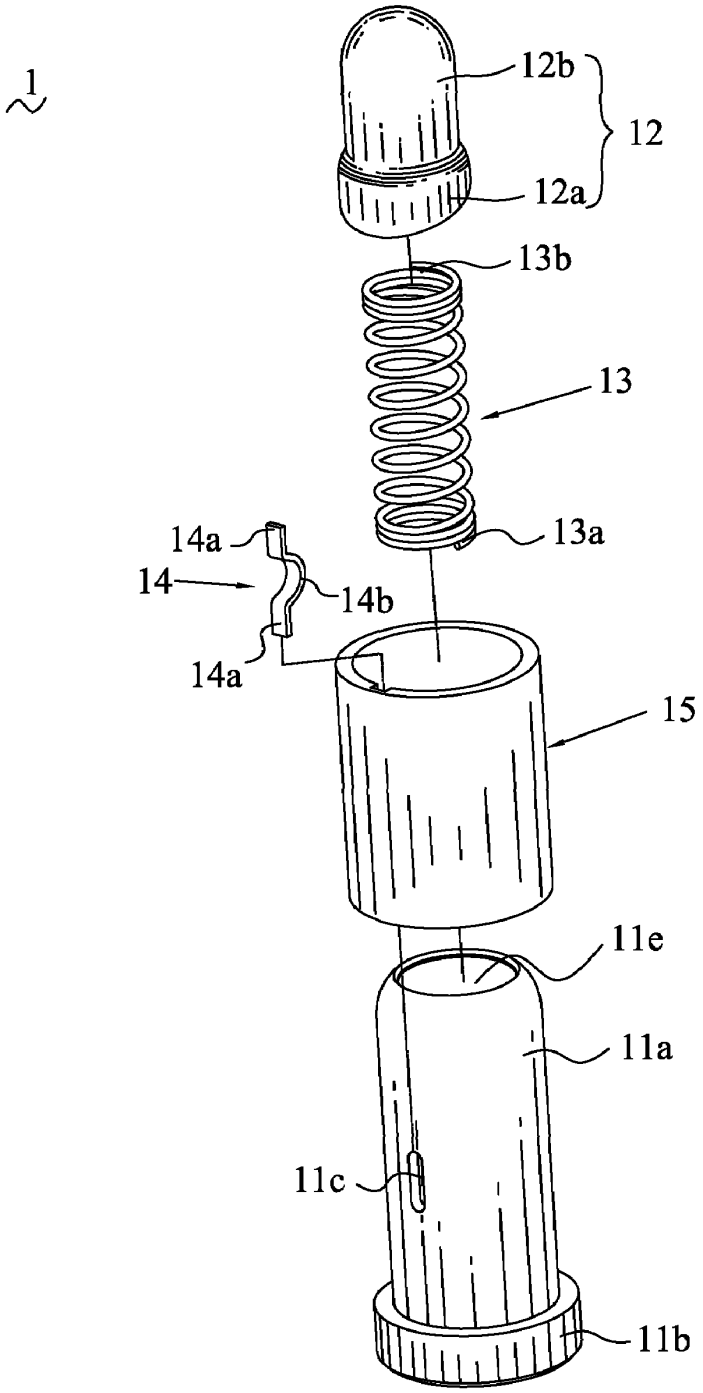

FIG. 2

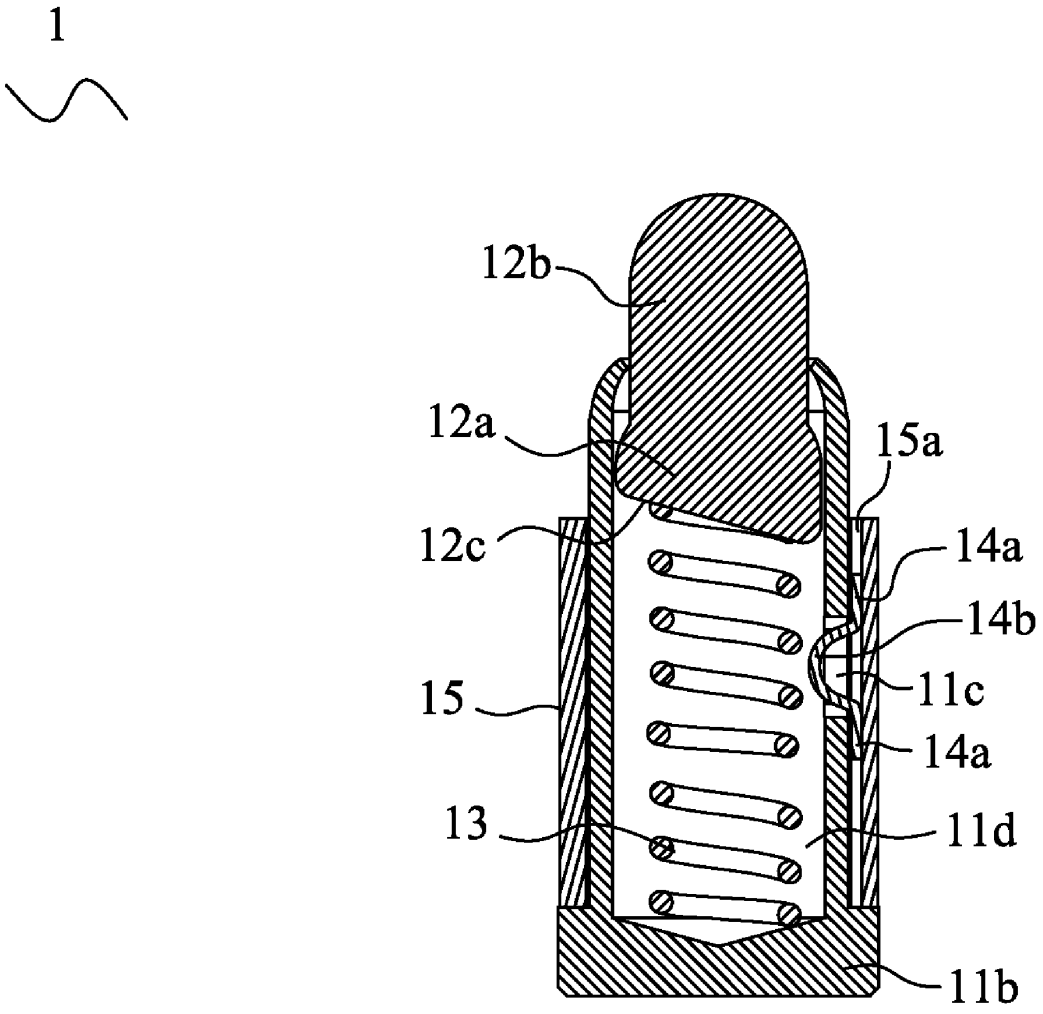

FIG. 3

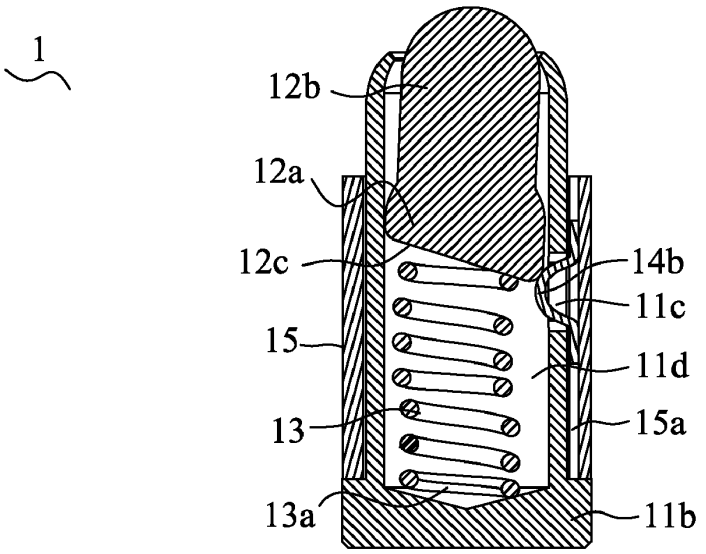
1
12b
12a
12c
14b
11c
15
11d
13
15a
13a
11b

FIG. 4

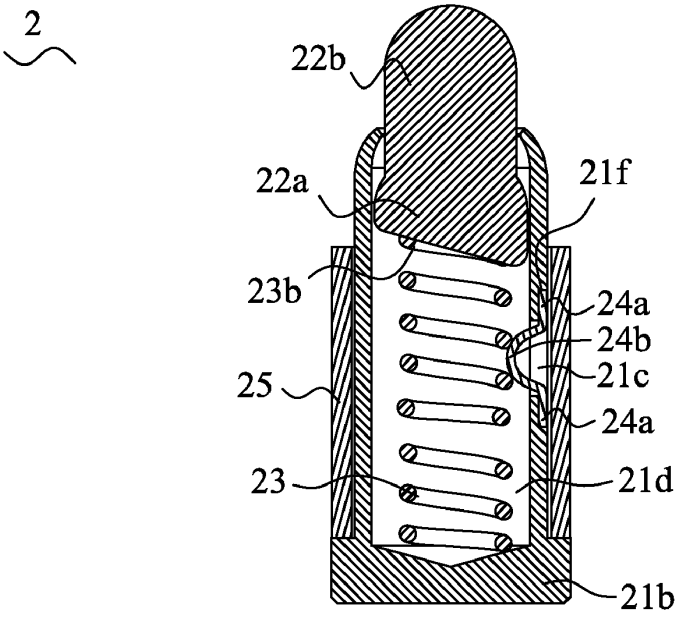
2
22b
22a
21f
23b
24a
24b
21c
25
24a
23
21d
21b

FIG. 5

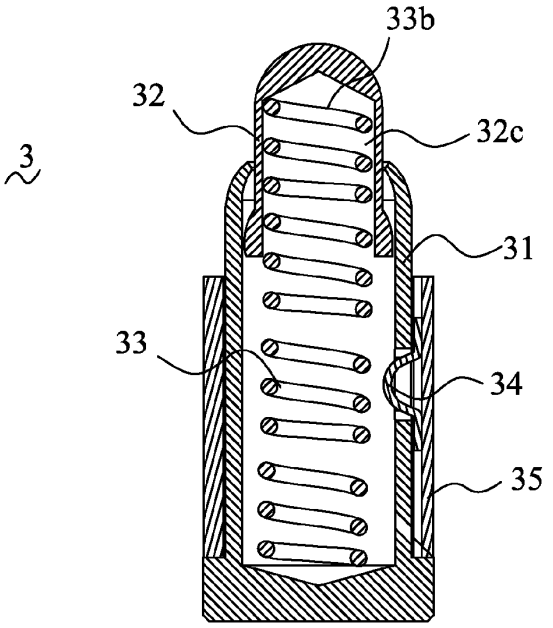

FIG. 6

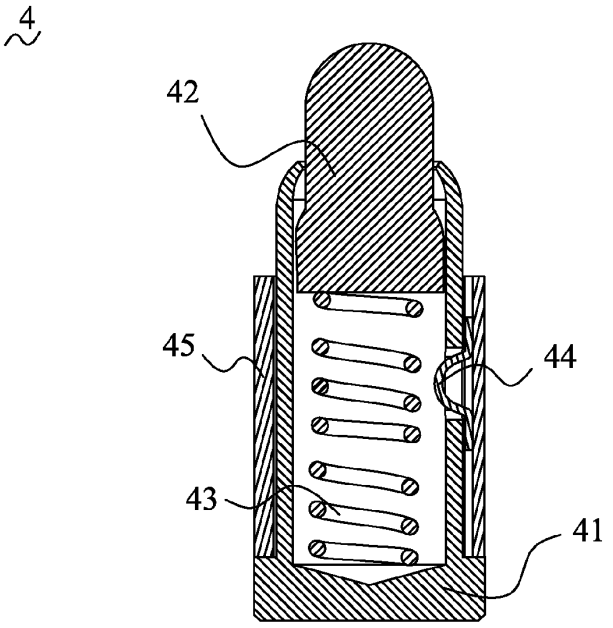

FIG. 7

PROBE CONNECTOR

BACKGROUND OF THE INVENTION

1. Field of the Invention

The present invention relates to a probe connector, and particularly to a probe connector having a structure capable of improving the connection stability between a barrel and a plunger thereof.

2. The Related Art

A probe connector mainly used in an electronic device generally includes a cylindraceous barrel, an elastic element assembled inside the barrel, and a plunger mounted to the barrel and partly projecting outside the barrel for contacting an outer electronic component. The plunger is pressed downwards by the electronic component to deflect to contact the barrel for achieving electrical connection. In order to improve the connection stability of the barrel and the plunger, conventionally, the plunger is formed with a ramped bottom surface which rests against an end of the elastic element. The ramped bottom surface of the plunger makes the elastic element compress and distort, in turn, the elastic element is provided with an opposite force which acts on the ramped bottom surface and slants the plunger to touch the barrel. However, such electrical connection between the barrel and the plunger is unstable and apt to break off instantly and discontinuously when the probe connector suffers from an unexpected force.

SUMMARY OF THE INVENTION

Accordingly, an object of the present invention is to provide a probe connector having a structure capable of improving connection stability between a barrel and a plunger thereof. The barrel includes a cylindraceous main body which defines a chamber therein, and a base connected with one end of the main body. The main body has an opening at a substantially middle portion thereof. The plunger includes a basic portion restricted in the barrel, and a contact portion extended from one end of the basic portion and exposed from the other end of the main body. A wrapping element surrounds an outer periphery of the main body. A resting element has a resting portion of arc shape, and two fixing slices extended opposite to each other from two ends of the resting portion. The resting portion projects into the chamber of the barrel through the opening. The fixing slices are sandwiched between the barrel and the wrapping element. The resting portion rests against a side of the basic portion when the contact portion is pressed downwards to deflect to contact an inner surface of the main body by an opposite side thereof.

As described above, the fixing slices of the resting element are sandwiched between the barrel and the wrapping element for fixing the resting element. The resting portion projects into the chamber through the opening. When the plunger is pressed downwards to make the basic portion extrude the resting portion outwards, in turn, the resting portion provides the opposite force pushing the basic portion to contact the inner surface of the main body securely, preventing the basic portion from breaking off the main body instantly and discontinuously when the probe connector suffers from the unexpected force.

BRIEF DESCRIPTION OF THE DRAWINGS

The present invention will be apparent to those skilled in the art by reading the following description, with reference to the attached drawings, in which:

FIG. **1** is an assembled, perspective view of a probe connector of a first embodiment in accordance with the present invention;

FIG. **2** is an exploded, perspective view of the probe connector shown in FIG. **1**;

FIG. **3** is a cross-sectional view of the probe connector shown in FIG. **1**;

FIG. **4** is a cross-sectional view of the probe connector shown in FIG. **1**, wherein a plunger is pressed inside a barrel;

FIG. **5** is a cross-sectional view of a probe connector of a second embodiment in accordance with the present invention;

FIG. **6** is a cross-sectional view of a probe connector of a third embodiment in accordance with the present invention; and

FIG. **7** is a cross-sectional view of a probe connector of a fourth embodiment in accordance with the present invention.

DETAILED DESCRIPTION OF THE EMBODIMENTS

With reference to FIGS. **1-3**, the first embodiment in accordance with the present invention is embodied in a probe connector **1**. The probe connector **1** includes a hollow barrel **11**, a plunger **12**, and an elastic element **13** received in the barrel **11**. The barrel **11** and the plunger **12** are made of metallic material. The elastic element **13** defines a first end **13***a* and a second end **13***b* opposite to the first end **13***a*.

The barrel **11** has a cylindraceous main body **11***a* which defines a chamber **11***d* therein, and a base **11***b* integrally sealed one end of the main body **11***a* for being against the first end **13***a* of the elastic element **13**. The main body **11***a* has an opening or a slot **11***c* at a substantial middle portion thereof and communicating with the chamber **11***d*. In this embodiment, the slot **11***c* extends along a longitudinal direction of the main body **11***a*. The other end of the main body **11***a* is bent inwards to form an opening **11***e* when the plunger **12** is mounted to the barrel **11**, for fixing the plunger **12** and the barrel **11** together. The base **11***b* is a short-pillar shape and has an outer diameter larger than that of the main body **11***a*.

The plunger **12** of cylindrical shape includes a basic portion **12***a*, and a contact portion **12***b* extending outwards from one end of the basic portion **12***a*. The basic portion **12***a* defines a ramped bottom surface **12***c* opposite to the contact portion **12***b* and against the second end **13***b* of the elastic element **13**. The diameter of the contact portion **12***b* is less than that of the basic portion **12***a*, with a free end shaped as a dome. The basic portion **12***a* is received in the chamber **11***d* of the barrel **11** and the contact portion **12***b* extends out of the barrel **11** through the opening **11***e*. The outer dimension of the basic portion **12***a* is less than the inner dimension of the main body **11***a* for allowing the basic portion **12***a* to be inclinably received in the chamber **11***d*. The dimension of the opening **11***e* is less than the outer dimension of the basic portion **12***a* for preventing the basic portion **12***a* from removing out of the chamber **11***d*.

The probe connector **1** further has a resting element **14** mounted to the main body **11***a*, and a wrapping element **15** surrounding the main body **11***a*. The resting element **14**, which may be bent with a metal strip, has an arc-shaped resting portion **14***b* and two fixing slices **14***a* extended opposite to each other from two free ends of the resting portion **14***b*. The wrapping element **15** is a cylinder, with an inner diameter thereof substantially the same as an outer diameter of the main body **11***a*. An inner surface of the wrapping element **15** is formed with a receiving groove **15***a* extending longitudinally and reaching two opposite edges thereof. In this embodiment, the receiving groove **15***a* has a depth sub-

NJOY Exhibit 1009.007

stantially the same as a thickness of the fixing slices **14***a*. In assembly, the resting portion **14***b* is inserted into the chamber **11***d* of the barrel **11** through the slot **11***c*. The fixing slices **14***a* are disposed to lean against an outer surface of the main body **11***a*. The wrapping element **15** slidably fits around the main body **11***a* and is supported by the base **11***b*, with the fixing slices **14***a* received in the receiving groove **15***a*. A circumferential outer surface of the wrapping element **15** is substantially the same as a circumferential outer surface of the base **11***b*. The fixing slices **14***a* are sandwiched between the main body **11***a* and the wrapping element **15** for fixing the resting element **14**.

FIG. **5** is a cross-sectional view showing a probe connector **2** of the second embodiment. The probe connector **2** is analogue to the probe connector **1** in the first embodiment except for the receiving groove. In the second embodiment, there are two receiving grooves **21***f* which are formed at an outer periphery of the main body **21** and symmetrical about the slot **21***c*. The receiving grooves **21***f* communicate with the slot **21***c* for receiving the fixing slices **24***a* of the resting element **24** when the resting portion **24***b* is inserted into the slot **21***c*. In this embodiment, the depth of the receiving groove **21***f* is substantially the same as the thickness of the fixing slice **24***a*.

FIGS. **6**-**7** illustrate probe connectors **3** and **4** in the third and fourth embodiments, which are both substantially the same as the probe connector **1** in the first embedment except for the plungers. In the third embodiment, the basic portion **32***a* of the plunger **32** has a columned restraining hole **32***c* at a bottom thereof, for receiving the second end **33***b* of the elastic element **33**. In the fourth embodiment, the plunger **42** is shaped with a level bottom surface against the elastic element **43**. It should be noted that the construction of the probe connector can be modified for meeting the different demands and should not be limited.

Please refer to the FIG. **4**, when the contact portion **12***b* of the plunger **12** is pressed downwards, the elastic element **13** is compressed downwards and distorted by the ramped bottom surface **12***c* of the basic portion **12***a* and generates an opposite force which acts on the ramped bottom surface **12***c* so that the basic portion **12***a* is deflected to contact an inner surface of the main body **11***a*. The resting portion **14***b* is extruded outwards by the basic portion **12***a* and generates an opposite force which acts on a side of the basic portion **12***a* opposite to a contact side of the basic portion **12***a* which contacts with the main body **11***a* by means of deflection of the basic portion **12***a*, reinforcing the contacting stability between the basic portion **12***a* and the main body **11***a*, without affecting by an unexpected shock or the like.

As described above, the fixing slices are sandwiched between the barrel and the wrapping element. The resting portion projects into the chamber through the slot. When the plunger is pressed downwards to make the basic portion extrude the resting portion outwards, in turn, the resting portion provides the opposite force pushing the basic portion to contact the inner surface of the main body steadily. It prevents the basic portion from breaking off the main body instantly when the probe connector suffers from the unexpected force.

The foregoing description of the present invention has been presented for the purposes of illustration and description. It is not intended to be exhaustive or to limit the invention to the precise form disclosed, and obviously many modifications and variations are possible in light of the above teaching. Such modifications and variations that may be apparent to those skilled in the art are intended to be included within the scope of this invention as defined by the accompanying claims.

What is claimed is:

1. A probe connector, comprising:

a barrel having a cylindraceous main body which defines a chamber therein, and a base connected with one end of the main body, the main body having an opening at a substantially middle portion thereof;

a plunger including a basic portion restricted in the barrel and a contact portion extended from one end of the basic portion and exposed from the other end of the main body;

a wrapping element surrounding an outer periphery of the main body; and

a resting element having a resting portion of arc shape, and two fixing slices extended opposite to each other from two ends of the resting portion, the resting portion projecting into the chamber of the barrel through the opening, the fixing slices sandwiched between the barrel and the wrapping element,

wherein the resting portion rests against a side of the basic portion when the contact portion is pressed downwards to deflect to contact an inner surface of the main body by an opposite side thereof.

2. The probe connector as claimed in claim **1**, wherein the wrapping element has a receiving groove at an inner surface thereof, the fixing slices are received in the receiving groove.

3. The probe connector as claimed in claim **2**, wherein the wrapping element is cylindraceous and slidably covered with the main body, the receiving groove passes through the wrapping element along a sliding direction of the wrapping element with respect to the main body, for slidably receiving the fixing slices which are disposed along the sliding direction.

4. The probe connector as claimed in claim **3**, wherein the base has a circumferential outer surface exceeding a circumferential outer surface of the main body and substantially flush with a circumferential outer surface of the mounted wrapping element.

5. The probe connector as claimed in claim **1**, wherein the main body has two receiving grooves at the outer periphery thereof and symmetrical about the opening, the fixing slices are received in the receiving grooves and restrained between the barrel and the wrapping element.

6. The probe connector as claimed in claim **1**, further comprising an elastic element arranged inside the barrel, the basic portion being shaped with a ramped bottom surface against an end of the elastic element for making the basic portion deflect to touch the main body when the plunger is pressed downwards.

7. The probe connector as claimed in claim **1**, further comprising an elastic element arranged inside the barrel, the basic portion has a restraining hole at a bottom thereof for receiving an end of the elastic element.

8. The probe connector as claimed in claim **1**, further comprising an elastic element arranged inside the barrel, the basic portion is formed with a level surface against an end of the elastic element.

* * * * *

NJOY Exhibit 1009.008