Oct. 13, 1936. C. L. WHITTEMORE, JR 2,057,353

VAPORIZING UNIT FOR THERAPEUTIC APPARATUS

Filed Sept. 27, 1935

Fig. 1.

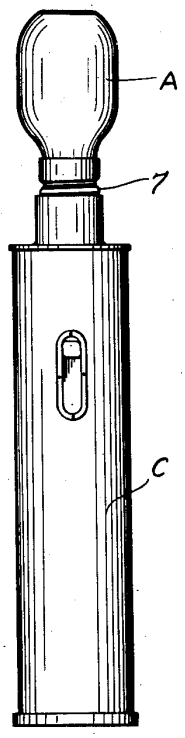


Fig. 2.

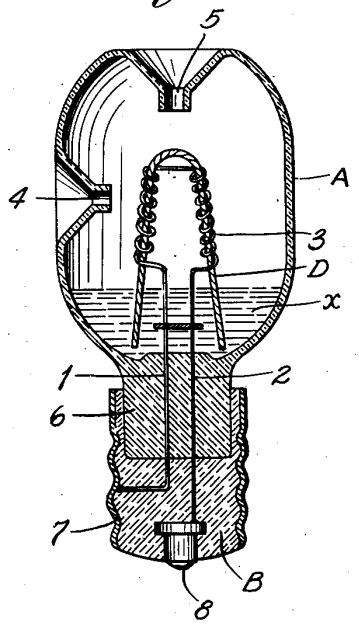


Fig. 3.

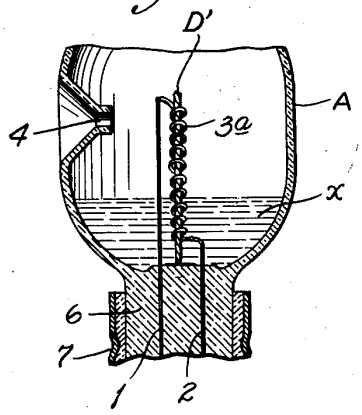


INVENTOR
CLINTON L. WHITTEMORE, JR.
BY Bakewell & Church
ATTORNEYS

NJOY Exhibit 1020.001

Patented Oct. 13, 1936 2,057,353

# UNITED STATES PATENT OFFICE

2,057,353

## VAPORIZING UNIT FOR THERAPEUTIC APPARATUS

Clinton L. Whittemore, Jr., St. Louis County, Mo., assignor to Levering Laboratories, Incorporated, St. Louis, Mo., a corporation of Delaware

Application September 27, 1935, Serial No. 42,391

13 Claims. (Cl. 219—38)

This invention relates to vaporizing units for therapeutic apparatus of the particular type disclosed in U. S. Patent No. 1,968,509, to F. E. Tiffany, dated July 31, 1934.

The object of my invention is to provide a vaporizing unit of the kind mentioned, which is of such construction that it will function properly, even though the heating element is spaced a considerable distance above or away from the medicament from which the vapor is evolved.

Figure 1 of the drawing is a side elevational view of a therapeutic apparatus equipped with a vaporizing unit constructed in accordance with my invention.

Figure 2 is an enlarged vertical sectional view of said unit; and

Figure 3 is a fragmentary vertical sectional view, illustrating another form of my invention.

In the drawing A designates the vaporizing vessel of my improved unit, said vessel being preferably constructed in the form of a hollow glass container adapted to hold a liquid medicament $x$ and provided with an electrically-operated heating means comprising two electrical conductors 1 and 2 and a filament or heating element 3 combined in such a way that when said conductors are energized by an electric current, the filament 3 will become heated. Similarly to the vaporizing unit disclosed in said Tiffany patent, the vaporizing vessel A is provided with an air inlet orifice 4 disposed at a point below the upper end of the vessel, a vapor outlet 5 formed preferably in the top wall of the vessel A, and a solid or substantially imperforate bottom portion 6 up through which conductors 1 and 2 extend and project upwardly into the interior of said vessel, the said conductors being sealed in the bottom portion 6 of the vessel. The vessel A is carried by and permanently connected to a terminal plug B of any preferred construction, that is adapted to be plugged into or positioned in a terminal socket forming part of an electric circuit, such, for example, as the receptacle or socket of an ordinary flashlight C. As shown in Figure 2, the conductor 1 is soldered to the inner surface of the metal shell 7 of the plug B, and the other conductor 2 is soldered to the inner surface of the center conducting button 8 of the plug.

In order that the unit will function properly, even though the heating element or filament 3 is spaced a considerable distance above or away from the medicament $x$, the unit is equipped with a wick D made of any suitable material and combined with the heating element or filament 3 in such a way that a portion of said wick is always in contact or approximate contact with the heating element or filament 3, and a portion of said wick is always in contact with the medicament in the vaporizing vessel, whereby said medicament will be carried by capillary action to a point where it will be vaporized by the heat from the filament 3. In the form of my invention shown in Figure 2, the wick D consists of a thread, string or stand of some suitable wick material doubled intermediate its ends so as to form a substantially inverted V-shaped device whose side portions are encased in and surrounded by coiled or looped portions of the filament 3, the lower ends or free ends of the side pieces of the wick projecting downwardly into the medicament and terminating at or in close proximity to the closed bottom 6 of the vessel A. With such a unit it is not necessary that the level of the medicament be maintained in close proximity to the heating element of the apparatus, but, on the contrary, the unit will operate properly so long as there is sufficient medicament in the vaporizing vessel A to engage or contact with a portion of the wick D.

Figure 3 illustrates another form of my invention, in which the filament or heating element $3^a$ is constructed in the form of a single vertically-disposed coil attached to the electrical conductors 1 and 2, and arranged so as to surround a wick D′ whose lower end terminates in close proximity to the inner face of the bottom 6 of the vaporizing vessel up through which the conductors 1 and 2 project.

Having thus described my invention, what I claim as new and desire to secure by Letters Patent is:

1. A vaporizing unit for therapeutic apparatus, consisting of a vessel or container adapted to hold a medicament, electrical conductors projecting into said vessel through the bottom of same, a heating filament carried by said conductors, and a wick directly engaged by the heating filament and extending from said filament to a point in close proximity to the bottom of said vessel.

2. A vaporizing unit of the kind described in claim 1, in which said vessel is carried by a terminal plug that is rigidly attached to the bottom portion of said vessel.

3. A tiltable vaporizing unit of the kind described in claim 1, in which said vessel is provided with an air inlet and a vapor outlet.

4. A vaporizing unit of the kind described in

NJOY Exhibit 1020.002

claim 1, in which the heating filament is coiled around a portion of said wick.

5. A vaporizing unit of the kind described in claim 1, in which the wick comprises a plurality of strands that extend downwardly from the heating filament and terminate in close proximity to the bottom of said vessel.

6. A vaporizing unit of the kind described in claim 1, in which the wick consists of a substantially inverted V-shaped device whose side portions are surrounded by coiled portions of the heating filament.

7. A vaporizing unit comprising, in combination, a liquid reservoir, a heating filament and a wick extending from said reservoir to said filament, said latter-named element being constructed and arranged to provide the sole support for said wick and being in direct contact therewith.

8. A vaporizer of the class described, comprising a vessel having an outlet open to the atmosphere and a closed bottom adapted to receive a vaporizable medicament, electric conductors having portions thereof extending through and above that portion of the interior of the vessel adapted to receive the medicament, and a wick associated with said conductors also having portions thereof extending through and above that portion of the interior of the vessel adapted to receive the medicament so that a portion of the wick will be submerged in the medicament and other portions will extend above the level thereof, the construction being such that when an electric circuit is completed through the conductors to heat the same and the medicament entrapped within the wick, a stream of vapor will be formed and projected upwardly within the vessel.

9. A therapeutic vaporizing unit adapted to be plugged into a conventional socket terminal of an electric circuit, comprising a plug terminal having a plurality of insulated circuit contacts, a vessel mounted upon said plug, said vessel having an outlet open to the atmosphere and a closed bottom to receive a medicament, conductors extending through the plug and into the vessel containing the medicament, said conductors terminating in a filament adapted to become heated upon completion of an electric current therethrough, and a porous wick entwined within the filament for lifting the medicament by capillary attraction whereby the liquid becomes vaporized upon the filament becoming heated.

10. A therapeutic vaporizer of the class described, comprising a vessel having an outlet at its upper end open to the atmosphere and a closed bottom adapted to receive a medicament, a terminal plug permanently attached to the bottom of said vessel and having conductors extending through that portion of the vessel adapted to contain the medicament and terminating in a filament slightly above the bottom of the vessel, said terminal plug being adapted to be plugged into a conventional terminal socket of an electric circuit and carrying contacts to complete the circuit through the filament, and a wick associated with the filament and in direct contact therewith whereby heat generated by the filament causes vaporization of the medicament entrapped within the wick.

11. As a new article of manufacture, a vaporizing unit for therapeutic use, comprising a plug terminal adapted to be plugged into a conventional socket terminal of an electrical circuit, a vessel for a medicament mounted upon said plug and having inlet and outlet openings to the atmosphere, filament wires extending from the plug through the bottom of the vessel and terminating therein, portions of the filament wires extending from the plug being located in that part of the vessel adapted to contain the medicament and other portions extending above the level thereof, and a wick carried by the filament wires for lifting the medicament by capillary attraction to those portions of the wires extending above the liquid level of the vessel.

12. As a new article of manufacture, a vaporizing unit for therapeutic use, comprising a plug terminal adapted to be plugged into a conventional terminal socket of an electrical circuit, a vessel for a medicament mounted upon said plug and having an outlet for vapors at its upper portion and an air inlet at a point lower down, electrical heating wires extending from the plug through the bottom of the vessel into the space adapted to contain the medicament and terminating above the normal liquid level thereof, and a wick surrounded and supported by the electrical heating wires for carrying the medicament by capillary attraction above the liquid surface level thereof.

13. As a new article of manufacture, and in combination with a portable casing having an electric battery cell and a conventional socket terminal, of a vessel for a medicament associated with the portable casing, said vessel carrying conductors extending through that portion of the bottom of the vessel in which the medicament is to be placed and provided with portions extending above the level of the medicament, a wick associated with the conductors and adapted to be heated thereby, and a manually operable switch carried by the casing and adapted to make and break the circuit at will leading from the battery through the plug terminal and the said filament.

CLINTON L. WHITTEMORE, Jr.

NJOY Exhibit 1020.003