US007356347B1

(12) **United States Patent**
Kammer

(10) **Patent No.: US 7,356,347 B1**
(45) **Date of Patent: Apr. 8, 2008**

(54) **EFFICIENT DISCOVERY OF DEVICES IN A BLUETOOTH ENVIRONMENT**

(75) Inventor: **David Kammer**, Seattle, WA (US)

(73) Assignee: **PalmSource, Inc.**, Sunnyvale, CA (US)

(*) Notice: Subject to any disclaimer, the term of this patent is extended or adjusted under 35 U.S.C. 154(b) by 545 days.

(21) Appl. No.: **09/676,270**

(22) Filed: **Sep. 28, 2000**

(51) **Int. Cl.**
H04Q 7/20 (2006.01)

(52) **U.S. Cl.** **455/517**; 455/515; 455/516; 455/41.2; 711/113; 711/202; 711/220; 340/10.1; 340/10.42

(58) **Field of Classification Search** 455/41.2, 455/517, 515, 516; 711/113–146, 202, 203, 711/206, 220; 340/10.01, 10.42, 10.1, 19.42
See application file for complete search history.

(56) **References Cited**

U.S. PATENT DOCUMENTS

5,293,644	A *	3/1994	Barry et al.	340/7.46
5,448,764	A *	9/1995	Sondermann et al.	455/88
5,555,426	A	9/1996	Johnson et al.	
5,592,154	A *	1/1997	Lin et al.	455/435.3
5,598,536	A *	1/1997	Slaughter et al.	709/219
5,668,952	A *	9/1997	Slane	709/245
5,835,720	A *	11/1998	Nelson et al.	709/224
5,854,901	A *	12/1998	Cole et al.	709/245
5,898,690	A	4/1999	Masashi	
6,026,445	A *	2/2000	Kephart et al.	709/245
6,249,814	B1 *	6/2001	Shaffer et al.	709/223
6,442,144	B1 *	8/2002	Hansen et al.	370/255
6,681,108	B1 *	1/2004	Terry et al.	455/412.2

FOREIGN PATENT DOCUMENTS

EP 1 322 071 A2 * 6/2003

WO WO 97/38542 10/1997

OTHER PUBLICATIONS

"Specification of the Bluetooth System, Wireless connections made easy, vol. 1, version 1.0 B, v1.0.b, Profiles, Generic Access Profile, Chapter 6 Idle Mode Procedures, pp. 27 to 44, 227" Bluetooth Specification, Online! Dec. 1, 1999, pp. 37-44, XPP002213903; Retrieved from the Internet; <URL.www.bluetooth.org>, 'retrieved on Sep. 18, 2002! p. 40, paragraph .3.6-p. 42, paragraph 6.4.4 p. 227; figures 2.2, 2.,3.

* cited by examiner

Primary Examiner—Nghi H. Ly
(74) *Attorney, Agent, or Firm*—Berry & Associates P.C.

(57) **ABSTRACT**

A method and system whereby an initiator device discovers the user-friendly name of another device in a wireless network of devices, such as a Bluetooth network. Initially, the initiator device broadcasts an inquiry message that is received by the other device (the responding device). The responding device provides its address in response to the inquiry. The initiator device then transmits a page, followed by a name request, to the responding device. The responding device provides its user-friendly name in response to the name request. The initiator device stores (e.g., caches) the address and the associated user-friendly name in a memory cache. When the initiator device subsequently sends an inquiry message that is received by the responding device, the responding device will provide its address to the initiator device. However, instead of sending a name request, the initiator device can retrieve the user-friendly name from the memory cache based on the address. Thus, the number of messages needed for the name discovery process is reduced, allowing the process to be performed more quickly and conserving the battery resources of the initiator and responding devices. In addition, potential errors associated with the name requests can be reduced or eliminated.

24 Claims, 9 Drawing Sheets

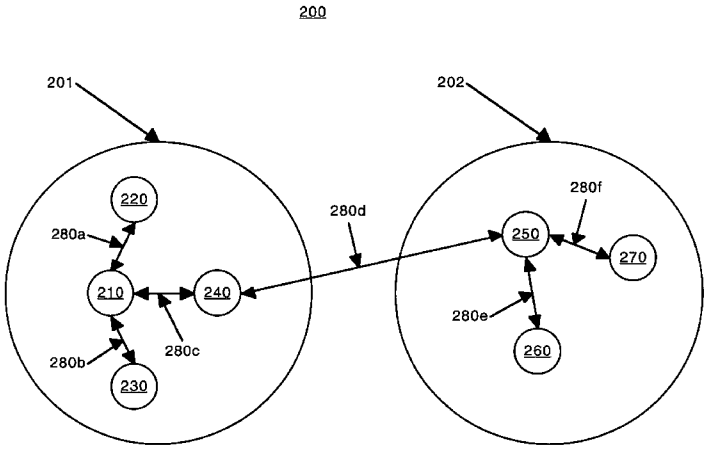

MICROSOFT CORP.
EXHIBIT 1222

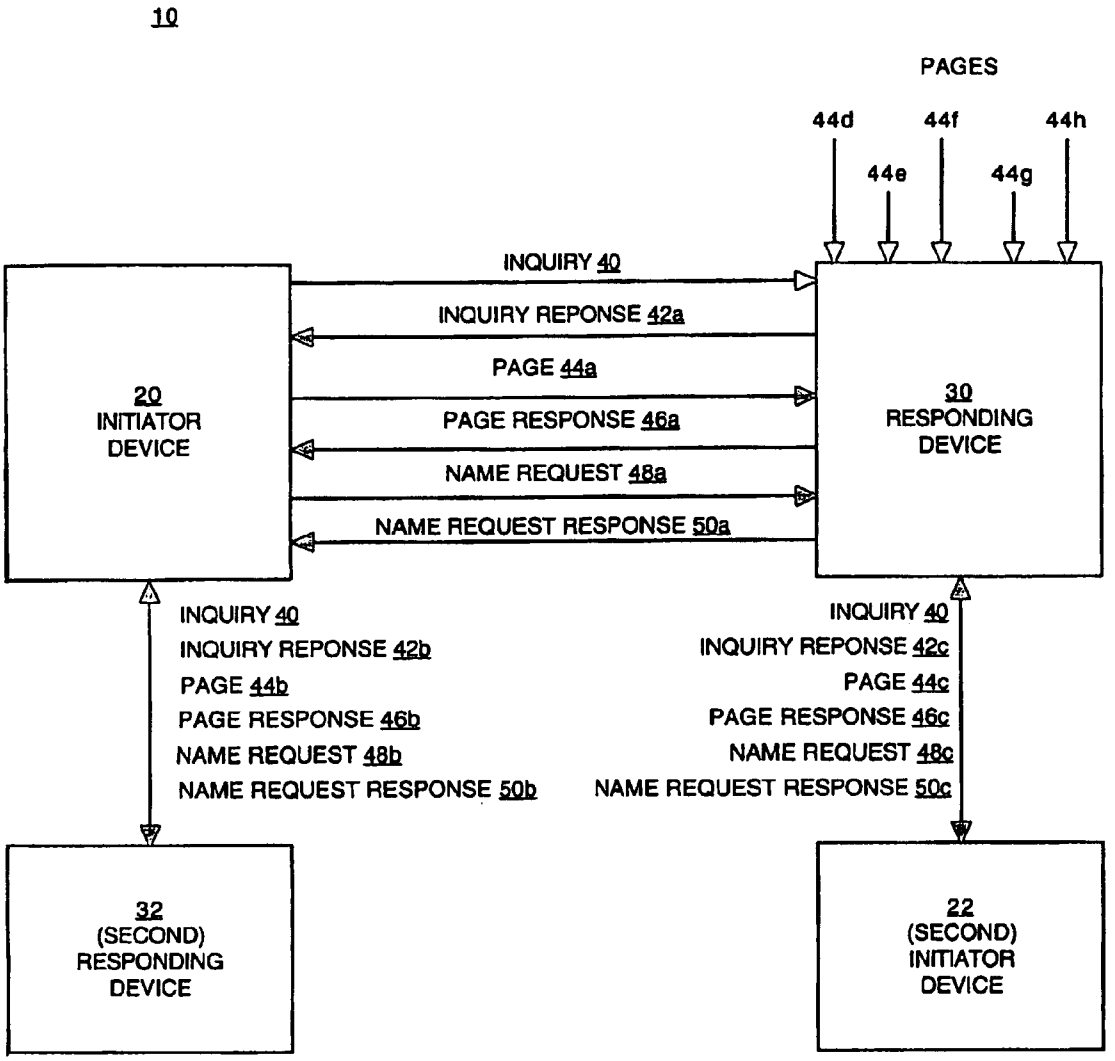

Figure 1
(Prior Art)

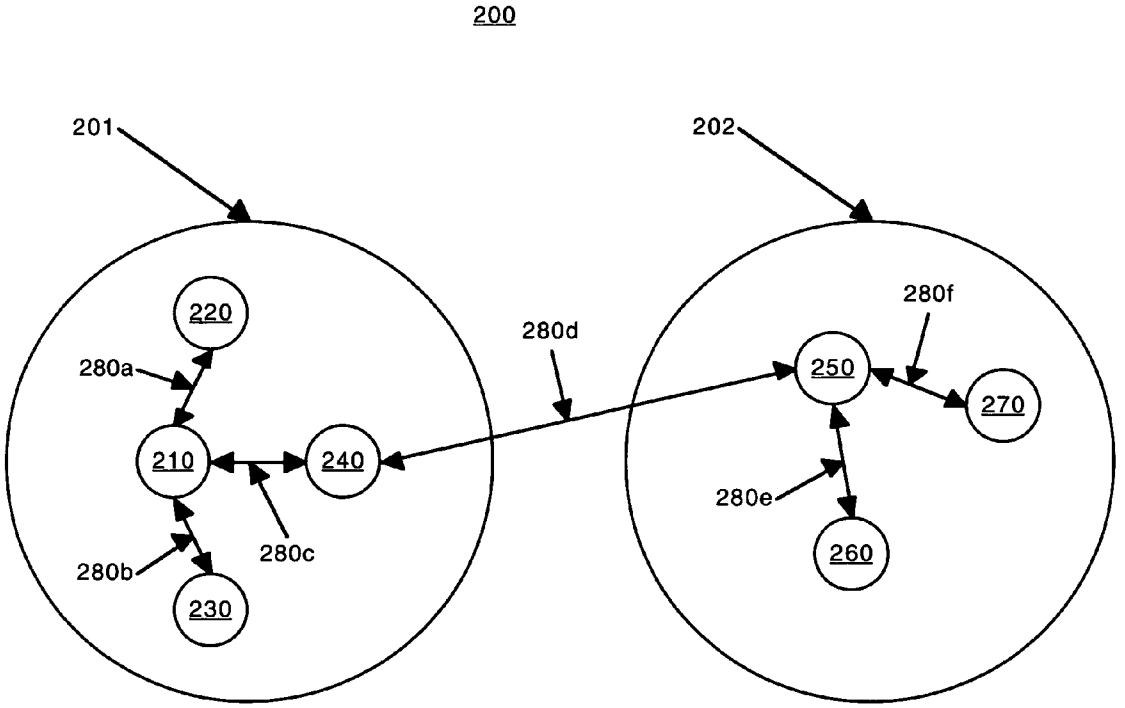
200
201
202
220
280a
210
240
280b
280c
230
280d
280f
250
270
280e
260

Figure 2

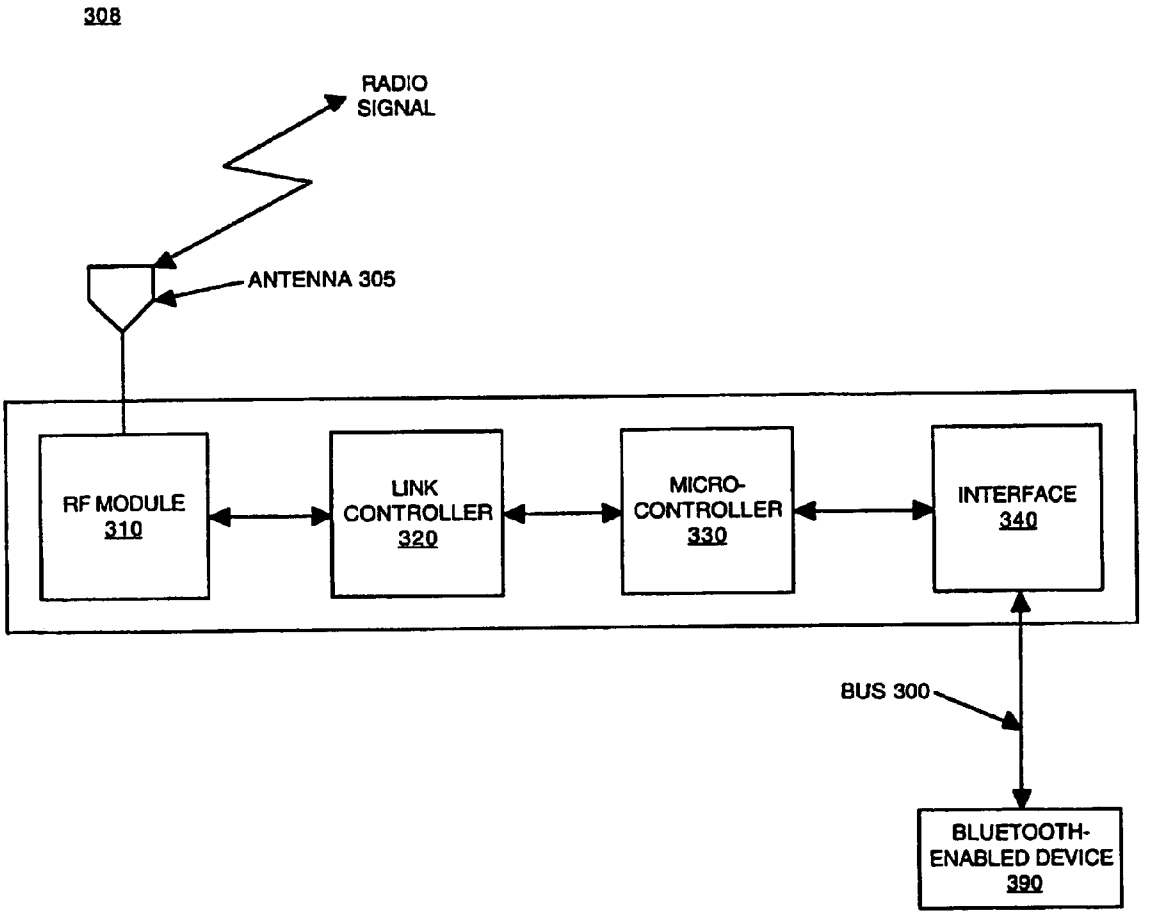
308
RADIO SIGNAL
ANTENNA 305
RF MODULE 310
LINK CONTROLLER 320
MICRO-CONTROLLER 330
INTERFACE 340
BUS 300
BLUETOOTH-ENABLED DEVICE 390

Figure 3

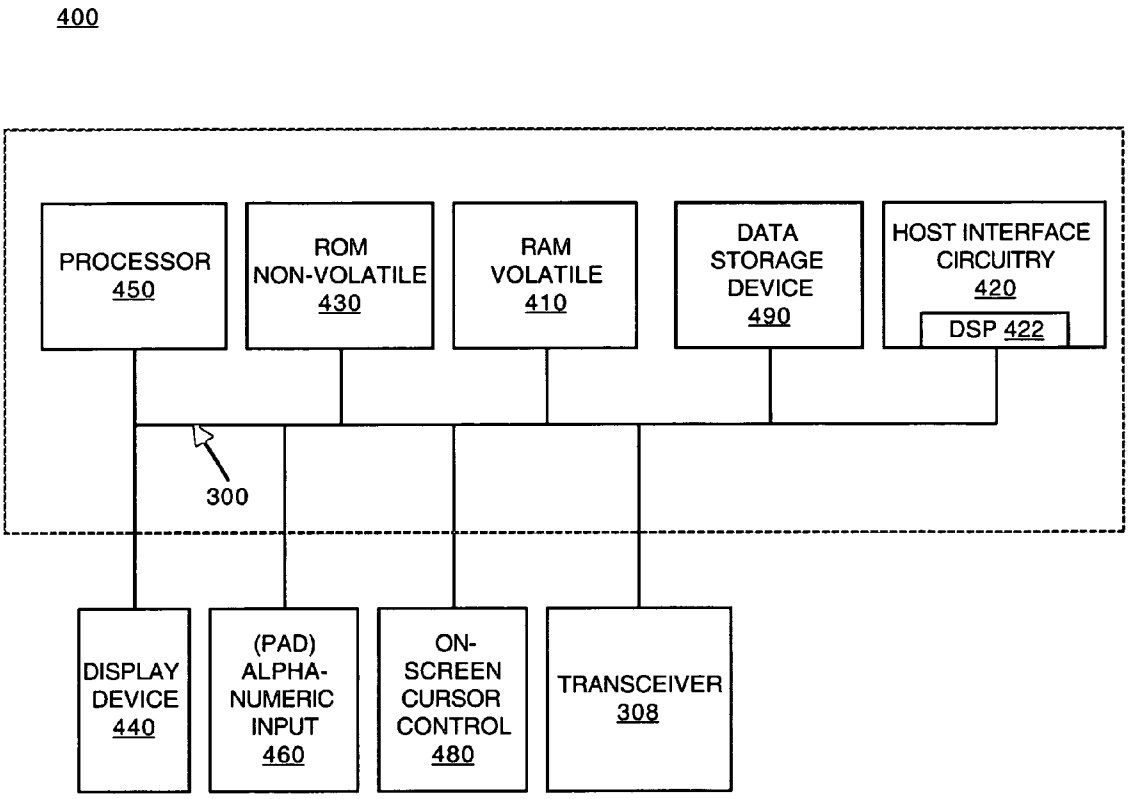
400
PROCESSOR
450
ROM
NON-VOLATILE
430
RAM
VOLATILE
410
DATA
STORAGE
DEVICE
490
HOST INTERFACE
CIRCUITRY
420
DSP 422
300
DISPLAY
DEVICE
440
(PAD)
ALPHA-
NUMERIC
INPUT
460
ON-
SCREEN
CURSOR
CONTROL
480
TRANSCEIVER
308

Figure 4

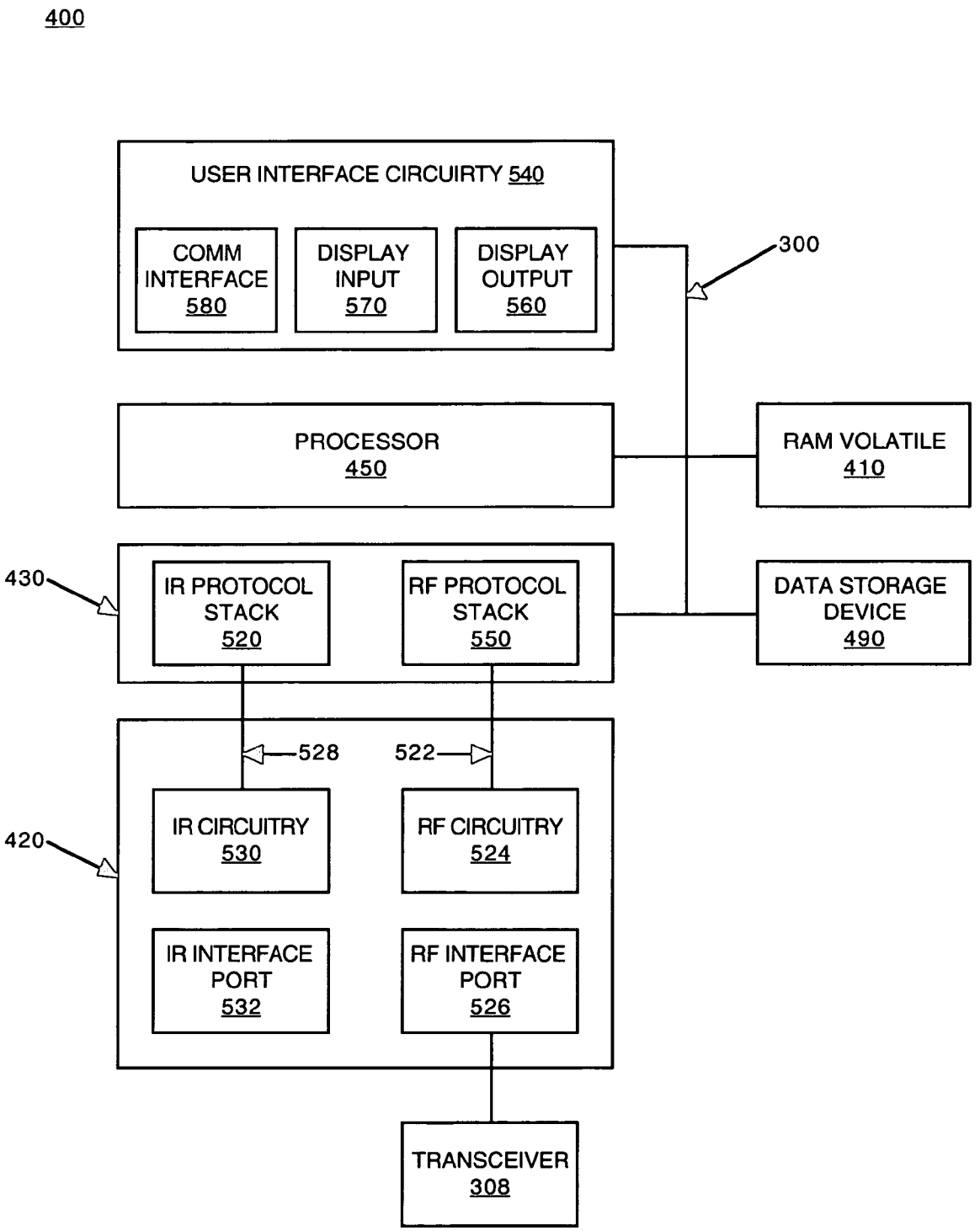
400
USER INTERFACE CIRCUIRTY 540
COMM INTERFACE 580
DISPLAY INPUT 570
DISPLAY OUTPUT 560
300
PROCESSOR 450
RAM VOLATILE 410
430
IR PROTOCOL STACK 520
RF PROTOCOL STACK 550
DATA STORAGE DEVICE 490
528
522
420
IR CIRCUITRY 530
RF CIRCUITRY 524
IR INTERFACE PORT 532
RF INTERFACE PORT 526
TRANSCEIVER 308

Figure 5

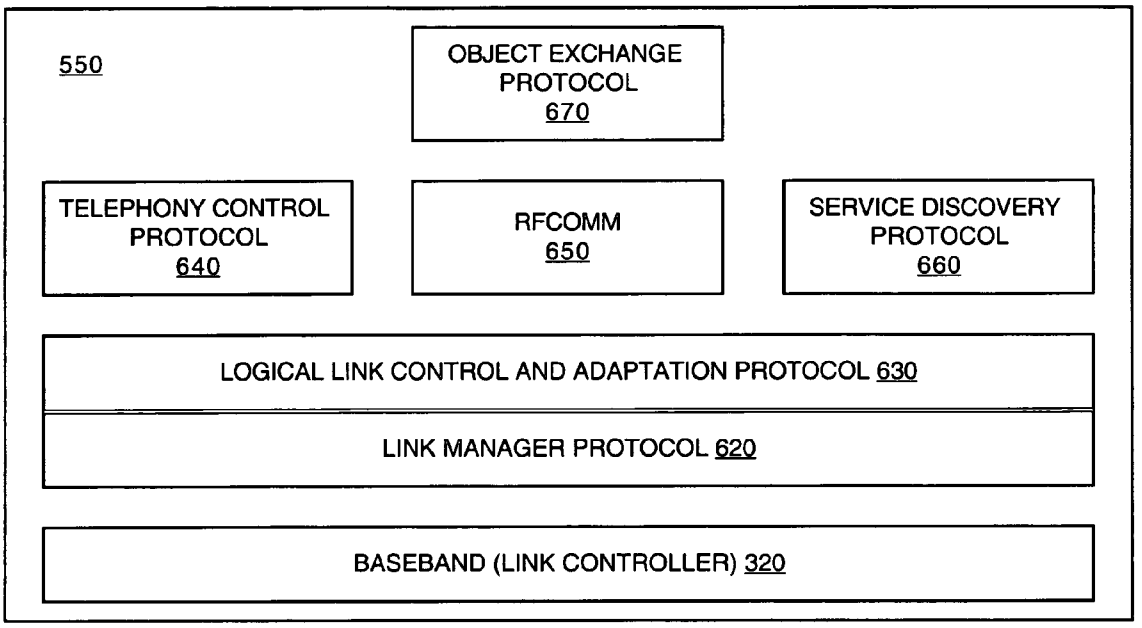
550
OBJECT EXCHANGE PROTOCOL 670
TELEPHONY CONTROL PROTOCOL 640
RFCOMM 650
SERVICE DISCOVERY PROTOCOL 660
LOGICAL LINK CONTROL AND ADAPTATION PROTOCOL 630
LINK MANAGER PROTOCOL 620
BASEBAND (LINK CONTROLLER) 320

Figure 6

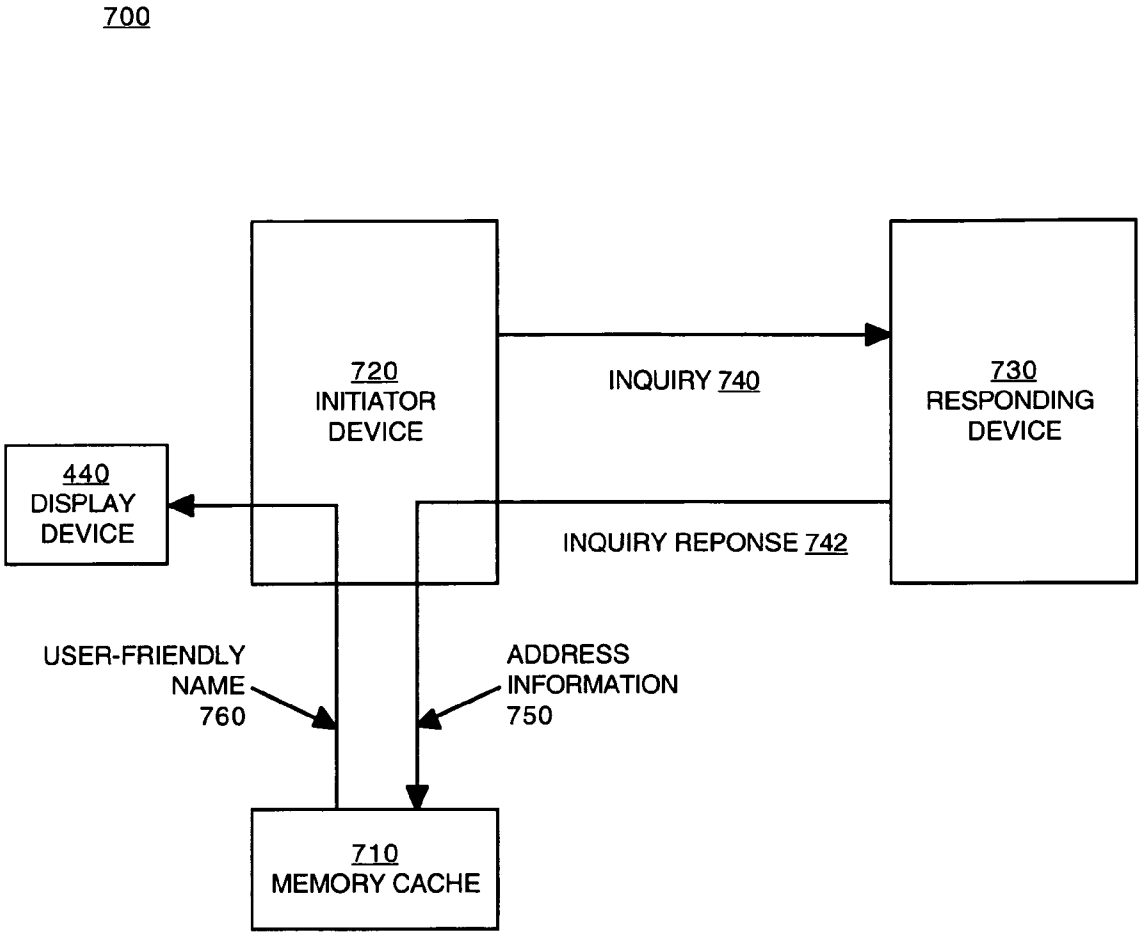
700
720
INITIATOR
DEVICE
INQUIRY 740
730
RESPONDING
DEVICE
440
DISPLAY
DEVICE
INQUIRY REPONSE 742
USER-FRIENDLY
NAME
760
ADDRESS
INFORMATION
750
710
MEMORY CACHE

Figure 7A

710

ADDRESS INFORMATION 750	USER-FRIENDLY NAME 760
nnn.nnnnn.nn	"Color Printer - 2nd Floor"
mmm.mmmmm.mm	"Black & White Printer - 2nd Floor"

Figure 7B

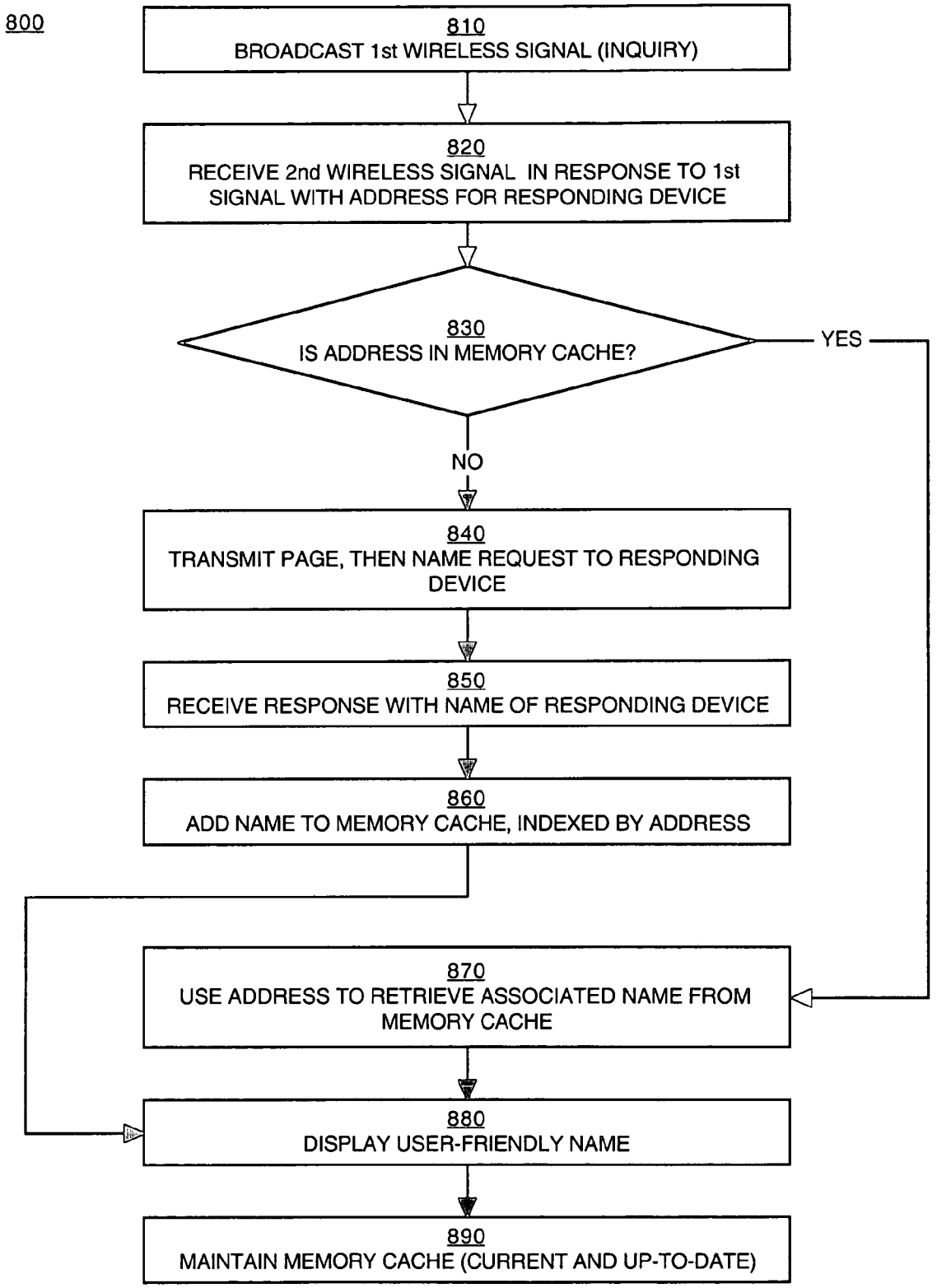
800
810
BROADCAST 1st WIRELESS SIGNAL (INQUIRY)
820
RECEIVE 2nd WIRELESS SIGNAL IN RESPONSE TO 1st SIGNAL WITH ADDRESS FOR RESPONDING DEVICE
830
IS ADDRESS IN MEMORY CACHE?
YES
NO
840
TRANSMIT PAGE, THEN NAME REQUEST TO RESPONDING DEVICE
850
RECEIVE RESPONSE WITH NAME OF RESPONDING DEVICE
860
ADD NAME TO MEMORY CACHE, INDEXED BY ADDRESS
870
USE ADDRESS TO RETRIEVE ASSOCIATED NAME FROM MEMORY CACHE
880
DISPLAY USER-FRIENDLY NAME
890
MAINTAIN MEMORY CACHE (CURRENT AND UP-TO-DATE)

Figure 8

EFFICIENT DISCOVERY OF DEVICES IN A BLUETOOTH ENVIRONMENT

TECHNICAL FIELD

The present invention relates to networks of devices that can be connected using wireless links, in particular devices that use the Bluetooth technology. Specifically, the present invention pertains to a method and system used by one Bluetooth device to discover the user-friendly name of another Bluetooth device.

BACKGROUND ART

Computer systems and other types of consumer electronic devices are commonly linked to each other and to peripheral devices using a myriad of different types of cables and connectors. As these devices grow in number and variety, their cables and connectors can often become quite cumbersome to work with. Accordingly, efforts are underway to develop technologies allowing hardware connections to be replaced with wireless ones.

One such technology is the Bluetooth technology. Bluetooth is the code name for a technology specification for short-range radio links that will allow the many proprietary cables that connect devices to one another to be replaced with short-range radio links.

The Bluetooth technology is based on a high-performance, yet low-cost, integrated radio transceiver. For instance, Bluetooth transceivers built into both a cellular telephone and a laptop computer system would replace the cables used today to connect a laptop to a cellular telephone. Printers, personal digital assistants (palmtop computer systems, hand-held devices and the like), desktop computer systems, fax machines, keyboards, joysticks and virtually any other digital device can be part of a Bluetooth system. Bluetooth radio technology can also provide a universal bridge to existing data networks and a mechanism to form small private ad hoc groupings ("scatternets" or "piconets") of connected devices away from fixed network infrastructures.

The Bluetooth technology allows Bluetooth devices to "discover" other Bluetooth devices that are within range and then connect with those devices, either automatically or at a user's discretion. The Generic Access Profile (GAP) of the Bluetooth specification (Section 6 of "Specification of the Bluetooth System, Core," version 1.0B, dated Dec. 1, 1999, herein incorporated by reference as background) describes the processes by which Bluetooth devices discover each other. The device discovery process has two primary steps: an inquiry step (described in Sections 6.1 and 6.2 of the Bluetooth specification), and a name discovery step (described in Section 6.3 of the Bluetooth specification). In the inquiry step, the Bluetooth devices make their presence known to each other and exchange attributes (e.g., addresses) needed to further the connection process. In the name discovery step, user-friendly names are exchanged to help a user identify Bluetooth devices that are in the environment. The inquiry and discovery steps are described in further detail below.

Prior Art FIG. **1** is a data flow diagram **10** illustrating the GAP process used by one Bluetooth device (initiator device **20**) to discover the name of another Bluetooth device (e.g., responding device **30**). First, initiator device **20** sends (broadcasts) an inquiry **40** over the nominal range of a typical Bluetooth device (e.g., approximately 10 meters). When initiator device **20** initiates an inquiry **40**, it typically remains in the inquiry state for 10.24 seconds (this time is programmable, but the Bluetooth specification recommends 10.24 seconds).

In order to receive and respond to inquiry **40**, responding devices **30** and **32** must be "discoverable" (e.g., the devices must be scanning for inquiry messages). Responding devices **30** and **32** send inquiry responses **42***a* and **42***b*, respectively, to initiator device **20** in response to inquiry **40**. Inquiry responses **42***a* and **42***b* provide the Bluetooth device addresses (a numerical address or a device access code) for responding devices **30** and **32**, and optionally provide additional information such as the clock, class of device and page scan mode. Significantly, inquiry responses **42***a* and **42***b* do not provide a name (or user-friendly name) for responding devices **30** and **32**. The user-friendly name can be up to 248 characters long and is not provided in order to reduce the length of the inquiry responses.

Initiator device **20** can therefore receive an inquiry response from multiple Bluetooth devices (e.g., responding devices **30** and **32**), providing each devices' numerical address at least. Generally, a user will not be able to identify one type of responding device over another based only on the device's numerical address. For example, there may be two printers in proximity, and the user generally will not be able to tell which printer to connect with based on the numerical address. However, "user-friendly names" can be used to identify each printer's location and features, allowing the user to make a selection of one over the other. Therefore, initiator device **20** needs to discover and display the user-friendly name for each of the devices that responded, so that the user can select the appropriate device with which to connect.

To accomplish this, initiator device **20** must connect one device at a time to each of the responding devices **30** and **32** in order to request a user-friendly name. Accordingly, initiator device **20** sends pages **44***a* and **44***b* to each device that responded to inquiry **40**. In response to the pages **44***a* and **44***b*, responding devices **30** and **32** send page responses **46***a* and **46***b*, respectively.

Next, initiator device **20** will send name requests **48***a* and **48***b* to responding devices **30** and **32**, respectively. In response to name request **48***a*, responding device **30** sends name request response **50***a* to initiator device **20**. Similarly, in response to name request **48***b*, responding device **32** sends name request response **50***b* to initiator device **20**. Name request responses **50***a* and **50***b* provide the user-friendly names for responding devices **30** and **32**, respectively. The user-friendly names are displayed to the user, who can then select one or more of the responding devices with which to connect.

There are a number of disadvantages associated with the Bluetooth name discovery process described above. One disadvantage is that the process, with up to six messages being exchanged between pair of initiator and responding devices, can take a relatively long time to complete.

Another disadvantage is that sending and responding to multiple pages **44***a*, **44***b* and **44***c* and multiple name requests **48***a*, **48***b* and **48***c* can consume the limited power resources that are typically available to initiator device **20** and responding device **30**. For example, personal digital assistants (PDAs), cell phones, and other mobile devices are limited in size and weight, and therefore these types of devices typically use smaller and lighter batteries of limited capacity. Each page **44***a* and **44***b* consumes the limited power available for initiator device **20**, and each page response **46***a* and **46***c* consumes the limited power available for responding device **30**. Similarly, each name request **48***a*

and **48***b* further consumes the limited power available for initiator device **20**, and each name request response **50***a* and **50***c* further consumes the limited power available for responding device **30**. Consequently, more frequent battery charges may be needed, inconveniencing the user.

Yet another disadvantage to the Bluetooth name discovery process is that two Bluetooth initiator devices (such as initiator device **20** and initiator device **22**) may each issue a page or name request (e.g., pages **44***a* and **44***c* and/or name requests **48***a* and **48***c*) to responding device **30** at the same time. Responding device **30** can only respond to one of the initiator devices at a time, and will ignore the other; for example, responding device **30** will respond to initiator device **20** and ignore the page **44***c* from initiator device **22**. As a result, page **44***c* from initiator device **22** can time out before initiator device **22** receives a response from responding device **30**. Consequently, the initiator device **22** must retransmit page **44***c* until a page response **46***c* is received.

A similar situation occurs when responding device **30** moves out of range of initiator device **20** between the time at which inquiry response **42** is received by initiator device **20** and the time at which initiator device **20** sends page **44***a* or name request **48***a*. For example, responding device **30** may be a PDA, a cell phone, or other mobile device. The user carrying responding device **30** may have been within range of initiator device **20** when inquiry **40** was sent, and then moved out of range before name request **48***a* was sent. Under these circumstances, the name request **48***a* will time out, and initiator device **20** may repeatedly retransmit name request **48***a* until the device recognizes that responding device **30** is no longer in range.

Thus, the prior art name discovery process described by the Bluetooth specification can be unpredictable and inefficient, increasing the time needed to identify and connect with Bluetooth devices. These problems are exacerbated as Bluetooth devices grow in number and popularity. With more Bluetooth devices in use, a responding device **30** is more likely to receive numerous pages (e.g., **44***a*-**44***h*) and or name requests (not shown) from multiple initiator devices within range. It is also more likely that the pages **44***a*-**44***h* and/or name requests will collide, and that many of these pages and/or name requests will be ignored and have to be retransmitted. It is also more likely that, as the number of Bluetooth devices increase, pages and/or name requests will be sent to a responding device that was only temporarily in range of an initiator device. When no response is received, these pages and/or name requests will generally have to be retransmitted.

Thus, with more Bluetooth devices in use, the prior art name discovery process can become more inefficient and unpredictable, generating an increasing number of messages as repeated attempts are made to complete the process. In addition, the increase in messages—the increase in pages and name requests, the increase in retransmitted pages and name requests, and the corresponding increase in the number of responses to pages and name requests—will further increase the burden on the limited power resources of both initiator and responding Bluetooth devices.

Finding a solution to the problems described above is made more complex because the solution must be substantially compliant with the Bluetooth specification. That is, many Bluetooth devices are being designed and manufactured according to the Bluetooth specification. Consequently, a solution that relies on a significant deviation from the Bluetooth specification will create new problems, such as incompatibility between newer Bluetooth devices and legacy Bluetooth devices. An aim of the Bluetooth specification is to provide a level of standardization across all Bluetooth devices, and a substantial deviation from the specification would be contrary to that aim. Accordingly, any solution to the prior art problems described above should be satisfactorily consistent with the Bluetooth specification, or it should be a solution that can be incorporated into legacy Bluetooth devices.

DISCLOSURE OF THE INVENTION

Accordingly, a need exists for a device and/or method that can speed up the Bluetooth name discovery process, and that can eliminate or reduce the inefficiency and unpredictability that can occur because of collisions between name requests or because devices move out of range of each other. A need also exists for a device and/or method that can satisfy the above needs and that can reduce the burden on the limited power resources available to many types of Bluetooth devices. In particular, a need exists for a device and/or method that can satisfy the above needs and that is consistent with the Bluetooth specification, and that can be implemented in Bluetooth-enabled devices including legacy Bluetooth devices. The present invention provides these advantages and others not specifically mentioned above but described in the sections to follow.

A method and device are described whereby one device (an "initiator device") discovers the user-friendly name of another device (a "responding device") in a wireless network of devices. In the preferred embodiment, the devices are Bluetooth-enabled devices.

In accordance with the present invention, the initiator device stores (e.g., caches) the address (e.g., a numerical address or device access code) and the associated user-friendly name for each of a plurality of responding devices in a memory cache. In the present embodiment, the address is used as an index for the user-friendly name. When the initiator device sends an inquiry message that is received by a responding device, the responding device will provide its address to the initiator device. However, instead of sending a page and a name request, the initiator device uses the address to retrieve the user-friendly name from the memory cache. In one embodiment, the user-friendly name is displayed to a user, and the user can then decide whether to establish a persistent connection with the responding device. Therefore, in accordance with the present invention, it is not necessary to send a page and a name request when the user-friendly name can be retrieved from memory.

In the present embodiment, when a persistent connection is made between the initiator device and the responding device, the user-friendly name is supplied by the responding device to the initiator device. This information can be used to update the user-friendly name in the memory cache, in case the name has changed since a previous connection between the initiator device and the responding device.

In another embodiment, an aging scheme is applied when the number of entries (e.g., names and addresses) in the memory cache reaches a maximum amount. In this case, a more recent (newest) entry in the memory cache will replace an entry that is, for example, the oldest or the least frequently accessed.

Thus, in accordance with the present embodiment of the present invention, there are instances in which the page and the name request messages can be eliminated from the name discovery process used by Bluetooth devices. Consequently, the number of messages needed for the name discovery

process can be reduced, speeding up the process and conserving the power resources of the initiator and responding devices.

In addition, potential errors associated with the pages and name requests can be reduced or eliminated, increasing the efficiency and predictability of the name discovery process. For example, in accordance with the present invention, the number of initiator devices sending pages and/or name requests at any given time will be reduced. Consequently, the number of instances in which a responding device will ignore one initiator device because it is responding to another will also be reduced, and therefore pages and name requests will not time out as often because they are being ignored. In addition, should the responding device move out of range of the initiator device in the time between the inquiry message and the page and/or name request, the initiator device can still complete the name discovery process by retrieving the user-friendly name from cache memory.

These and other objects and advantages of the present invention will become obvious to those of ordinary skill in the art after having read the following detailed description of the preferred embodiments which are illustrated in the various drawing figures.

BRIEF DESCRIPTION OF THE DRAWINGS

The accompanying drawings, which are incorporated in and form a part of this specification, illustrate embodiments of the invention and, together with the description, serve to explain the principles of the invention:

PRIOR ART FIG. **1** is a data flow diagram illustrating a prior art process initiated by one device to discover the name of another device.

FIG. **2** illustrates a network of devices coupled using wireless connections in accordance with one embodiment of the present invention.

FIG. **3** is a block diagram showing one embodiment of a Bluetooth wireless transceiver in accordance with the present invention.

FIG. **4** is a block diagram of an exemplary portable computer system coupled to the Bluetooth wireless transceiver of FIG. **3** in accordance with one embodiment of the present invention.

FIG. **5** is a block diagram showing features of the portable computer system of FIG. **4** in accordance with one embodiment of the present invention.

FIG. **6** is a block diagram illustrating a protocol stack used by a Bluetooth-enabled device in accordance with one embodiment of the present invention.

FIG. **7**A is a data flow diagram illustrating a process for discovering the name of a device in accordance with one embodiment of the present invention.

FIG. **7**B illustrates an exemplary memory cache for storing names and addresses of devices in accordance with one embodiment of the present invention.

FIG. **8** is a flowchart of the steps in a process for discovering the name of a device in accordance with one embodiment of the present invention.

BEST MODE FOR CARRYING OUT THE INVENTION

Reference will now be made in detail to the preferred embodiments of the invention, examples of which are illustrated in the accompanying drawings. While the invention will be described in conjunction with the preferred embodiments, it will be understood that they are not intended to limit the invention to these embodiments. On the contrary, the invention is intended to cover alternatives, modifications and equivalents, which may be included within the spirit and scope of the invention as defined by the appended claims. Furthermore, in the following detailed description of the present invention, numerous specific details are set forth in order to provide a thorough understanding of the present invention. However, it will be obvious to one of ordinary skill in the art that the present invention may be practiced without these specific details. In other instances, well-known methods, procedures, components, and circuits have not been described in detail so as not to unnecessarily obscure aspects of the present invention.

Some portions of the detailed descriptions that follow are presented in terms of procedures, logic blocks, processing, and other symbolic representations of operations on data bits within a computer memory. These descriptions and representations are the means used by those skilled in the data processing arts to most effectively convey the substance of their work to others skilled in the art. A procedure, logic block, process, etc., is here, and generally, conceived to be a self-consistent sequence of steps or instructions leading to a desired result. The steps are those requiring physical manipulations of physical quantities. Usually, though not necessarily, these quantities take the form of electrical or magnetic signals capable of being stored, transferred, combined, compared, and otherwise manipulated in a computer system. It has proven convenient at times, principally for reasons of common usage, to refer to these signals as bits, bytes, values, elements, symbols, characters, terms, numbers, or the like.

It should be borne in mind, however, that all of these and similar terms are to be associated with the appropriate physical quantities and are merely convenient labels applied to these quantities. Unless specifically stated otherwise as apparent from the following discussions, it is appreciated that throughout the present invention, discussions utilizing terms such as "receiving," "storing," "retrieving," "updating," "removing," "displaying," "transmitting," "accessing," or the like, refer to the action and processes (e.g., process **800** of FIG. **8**) of a computer system or similar intelligent electronic computing device, that manipulates and transforms data represented as physical (electronic) quantities within the computer system's registers and memories into other data similarly represented as physical quantities within the computer system memories or registers or other such information storage, transmission or display devices.

The present invention is discussed primarily in a context in which devices and systems are coupled using wireless links, and specifically with regard to devices and systems compliant with the Bluetooth technology. Bluetooth is the code name for a technology specification for small form factor, low-cost, short-range radio links between personal computers (PCs), mobile phones and other devices. The Bluetooth technology allows cables that connect devices to one another to be replaced with short-range radio links. However, it is appreciated that the present invention may be utilized with devices and systems coupled using technologies and/or protocols different from Bluetooth, including but not limited to infrared communications links as defined by the Infrared Data Association (IrDA).

In the parlance of Bluetooth, a collection of devices connected in a Bluetooth system is referred to as a "piconet" or a "subnet." A piconet starts with two connected devices, such as a computer system and a cellular phone, and may grow to eight connected devices. All Bluetooth devices are

peer units; however, when establishing a piconet, one unit will act as a master and the other(s) as slave(s) for the duration of the piconet connection.

A Bluetooth system supports both point-to-point and point-to-multi-point connections. Several piconets can be established and linked together in a "scatternet," where each piconet is identified by a different frequency hopping sequence. All devices participating on the same piconet are synchronized to their respective hopping sequence.

FIG. **2** illustrates the topology of a network **200** of devices coupled using wireless connections in accordance with one embodiment of the present invention. Devices **210**, **220**, **230** and **240** are coupled in piconet **201** using wireless connections **280***a-c*. Similarly, devices **250**, **260** and **270** are coupled in piconet **202** using wireless connections **280***e-f*. Piconet **201** and piconet **202** are coupled using wireless connection **280***d*. Devices **210-270** can be printers, personal digital assistants (PDAs), desktop computer systems, laptop computer systems, cell phones, fax machines, keyboards, joysticks and virtually any other device. In the present embodiment, devices **210-270** are Bluetooth devices; that is, they are equipped with a Bluetooth radio transceiver, or they are adapted to communicate with Bluetooth devices ("Bluetooth-enabled"). That is, the Bluetooth radio transceiver may be integrated into a device, or it may be coupled to a device.

FIG. **3** is a block diagram of one embodiment of a transceiver **308** in accordance with the present invention. In a preferred embodiment (the "Bluetooth embodiment"), transceiver **308** is a Bluetooth device comprising a digital component (e.g., a Bluetooth controller) and an analog component (e.g., a Bluetooth radio).

In the present embodiment, transceiver **308** comprises an antenna **305** for receiving or transmitting radio signals, a radio frequency (RF) module **310**, a link controller **320**, a microcontroller (or central processing unit) **330**, and an external interface **340**. In the present embodiment, transceiver **308** is coupled by a system bus **300** to a Bluetooth-enabled device **390** (e.g., a host device such as a computer system or similar intelligent electronic device, a PDA, a printer, a fax machine, etc.). However, it is appreciated that in another embodiment, transceiver **308** may be integrated into Bluetooth-enabled device **390**.

In the Bluetooth embodiment, RF module **310** is a Bluetooth radio. The Bluetooth radio can provide: a bridge to existing data networks, a peripheral interface, and a mechanism to form piconets of connected devices away from fixed network infrastructures (see FIG. **2**).

Bluetooth radios operate in the ISM (Industrial, Scientific, Medical) band at 2.4 GHz. A frequency hop transceiver is applied to combat interference and fading. Bluetooth uses a packet-switching protocol based on a frequency hop scheme with 1600 hops/second. Slots can be reserved for synchronous packets. A packet nominally covers a single slot, but can be extended to cover up to five slots. Each packet is transmitted in a different hop frequency. The entire available frequency spectrum is used with 79 hops of one (1) MHz bandwidth, defined analogous to the IEEE (Institute of Electronic and Electrical Engineering) 802.11 standard. The frequency hopping scheme is combined with fast ARQ (Automatic Repeat Request), cyclic redundancy check (CRC) and Forward Error Correction (FEC) for data.

In the present embodiment, link controller **320** is a hardware digital signal processor for performing baseband processing as well as other functions such as Quality-of-Service, asynchronous transfers, synchronous transfers, audio coding, and encryption (refer also to FIG. **6**, below). Link controller **320** has two major states: standby and connection. In addition, there are seven substates: page, page scan, inquiry, inquiry scan, master response, slave response, and inquiry response. The substates are interim states that are used to add new slaves to a piconet (FIG. **2**).

Continuing with reference to FIG. **3**, in one embodiment, microcontroller **330** is an application specific integrated circuit (ASIC). In the Bluetooth embodiment, microcontroller **330** is a separate central processing unit (CPU) core for managing transceiver **308** and for handling some inquiries and requests without having to involve the host device. In the Bluetooth embodiment, microcontroller **330** runs software that discovers and communicates with other Bluetooth devices via the Link Manager Protocol (LMP). The LMP provides a number of services including sending and receiving of data, inquiring of and reporting a name or device identifier, making and responding to link address inquiries, connection setup, authentication, and link mode negotiation and setup. The LMP also can be used to place transceiver **308** in "sniff" mode, "hold" mode, "park" mode or "standby" mode. Refer also to FIG. **6**, below.

The hold mode is a power saving mode that can be used for connected units if no data need to be transmitted. The sniff and park modes are also low power modes. In the sniff mode, a device listens to the piconet at a reduced rate (relative to the regular rate), thus reducing its duty cycle. The sniff interval is programmable and depends on the application. In the park mode, a device is still synchronized to the piconet but does not participate in the traffic.

In the present embodiment, before any connections between Bluetooth devices are created, all devices are in standby mode; that is, the standby mode is the default mode of a Bluetooth device. The standby mode is a low power mode in which an unconnected unit "listens" for messages at a regular rate (generally, every 2.56 seconds according to the Bluetooth specification) on a set of hop frequencies defined for that unit. Link controller **320** may leave the standby mode to scan for page or inquiry messages, or to transmit a page or inquiry message. When responding to a page message, the Bluetooth device enters the connection state as a slave. When carrying out a successful page attempt, the Bluetooth device enters the connection state as a master.

A "discoverable device" is a Bluetooth device in range that will respond to an inquiry (normally in addition to responding to a page). A "connectable device" is a Bluetooth device in range that will respond to a page. Additional information is provided in conjunction with FIG. **7**.

With reference still to FIG. **3**, in the present embodiment, interface **340** is for coupling transceiver **308** to Bluetooth-enabled device **390** in a suitable format. Transceiver **308** may be coupled by system bus **300** to Bluetooth-enabled device **390** (e.g., a host device such as a computer system or similar intelligent electronic device, a PDA, a printer, a fax machine, etc.), or transceiver **308** may be integrated into Bluetooth-enabled device **390**. In the present embodiment, interface **340** runs software that allows transceiver **308** to interface with the operating system of Bluetooth-enabled device **390**. In accordance with the present invention, interface **340** may be any of a variety of physical bus interfaces, including but not limited to a Universal Serial Bus (USB) interface, a Personal Computer (PC) Card interface, a CardBus or Peripheral Component Interconnect (PCI) interface, a mini-PCI interface, a Personal Computer Memory Card International Association (PCMCIA) interface, an Industry Standard Architecture (ISA) interface, or a RS-232 interface.

FIG. **4** is a block diagram of one embodiment of a host device that can be used in accordance with the present

invention. In the present embodiment, the host device is a portable computer system **400**; however, it is appreciated that the host device may be another type of intelligent electronic device. In the Bluetooth embodiment, portable computer system **400** is a Bluetooth-enabled device (e.g., device **390** of FIG. **3**) coupled with a Bluetooth transceiver **308**. Portable computer system **400** is also referred to as a PDA, a portable information device (PID), a palmtop or hand-held computer system.

Continuing with reference to FIG. **4**, portable computer system **400** includes an address/data bus **300** for communicating information, a central processor **450** coupled with the bus **300** for processing information and instructions, a volatile memory **410** (e.g., random access memory, RAM) coupled with the bus **300** for storing information and instructions for the central processor **450**, and a non-volatile memory **430** (e.g., read only memory, ROM) coupled with the bus **300** for storing static information and instructions for the processor **450**. Portable computer system **400** also includes an optional data storage device **490** (e.g., a memory stick) coupled with the bus **300** for storing information and instructions. Device **490** can be removable. Portable computer system **400** also contains a display device **440** coupled to the bus **300** for displaying information to the computer user.

Portable computer system **400** also includes a signal transmitter/receiver (transceiver) device **308**, which is coupled to bus **300** for providing a wireless radio (RF) communication link between computer system **400** and other wireless devices. In the Bluetooth embodiment, transceiver **308** is compliant with the Bluetooth specification; see FIG. **3**.

In one embodiment, portable computer system **400** of FIG. **4** includes host interface circuitry **420** coupled to bus **300**. Host interface circuitry **420** includes an optional digital signal processor (DSP) **422** for processing data to be transmitted or data that are received via transceiver **308**. Alternatively, processor **450** can perform some or all of the functions performed by DSP **422**.

Also included in computer system **400** is an optional alphanumeric input device **460** that, in one implementation, is a handwriting recognition pad ("digitizer"). Alphanumeric input device **460** can communicate information and command selections to processor **450** via bus **300**. In one implementation, alphanumeric input device **460** is a touch screen device. Alphanumeric input device **460** is capable of registering a position where a stylus element (not shown) makes contact.

Portable computer system **400** also includes an optional cursor control or directing device (on-screen cursor control **480**) coupled to bus **300** for communicating user input information and command selections to processor **450**. In one implementation, on-screen cursor control device **480** is a touch screen device incorporated with display device **440**. On-screen cursor control device **480** is capable of registering a position on display device **440** where a stylus element makes contact. The display device **440** utilized with portable computer system **400** may be a liquid crystal display (LCD) device, a cathode ray tube (CRT), a field emission display device (also called a flat panel CRT), or other display device suitable for generating graphic images and alphanumeric characters recognizable to the user. In the preferred embodiment, display device **440** is a flat panel display.

FIG. **5** is a block diagram showing additional features of portable computer system **400** in accordance with one embodiment of the present invention. User interface circuitry **540** is coupled to processor **450** via bus **300**. User interface circuitry includes hardware and software components that provide user input and output resources for functions performed by processor **450**. In the present embodiment, user interface circuitry **540** includes a display output **560**, a display input **570**, and communication interface **580**.

In this embodiment, display output **560** receives digital information representing graphical information from processor **450**, and converts the information to a graphical display, such as text and/or images, for display on display device **440** (FIG. **4**), for example. Display input **570** may receive data inputs, such as graphical data inputs, from a user. The graphical data inputs can be entered by the user with a stylus element on the pressure-sensitive display device **440** (specifically, on-screen cursor control device **480**, FIG. **4**) or the alphanumeric input device **460** (FIG. **4**).

The communication interface **580** allows the user to enter other types of data, such as audio or video data, or data formatted for operation with particular applications executed by portable computer system **400**, such as calendar data, electronic mail data, word processing, databases, and the like. In one embodiment of the present invention, the communication interface **580** is a serial communication port, but could also alternatively be of any of a number of well-known communication standards and protocols, e.g., parallel, SCSI (small computer system interface), Firewire (IEEE 1394), Ethernet, etc.

Host interface circuitry **420** is coupled to processor **450** via bus **300**. Host interface circuitry **420** (or link interface circuitry or data interface circuitry) illustrates, but is not limited to, two alternative link interface ports for establishing a wireless link to another device: an RF interface port **526** and an infrared (IR) interface port **532**.

In the present embodiment, RF circuitry **524** converts signals to radio frequency output and accepts radio frequency input via RF interface port **526**. In the Bluetooth embodiment, RF interface port **526** is a Bluetooth transceiver **308** (FIG. **3**). RF signals received by RF circuitry **524** are converted to electrical signals and relayed to RF protocol stack **550** via connection **522**.

In the present embodiment, IR circuitry **530** converts signals into infrared output and accepts infrared input via IR interface port **532**. Infrared communication signals received by IR circuitry **530** are converted to electrical signals that are relayed to IR protocol stack **520** via connection **528**.

Processor **450** is capable of executing RF protocol stack **550** and IR protocol stack **520**. IR stack **520** implements an IR protocol to support infrared links with other devices.

FIG. **6** is a block diagram illustrating the layers of the RF protocol stack **550** used by a Bluetooth-enabled device such as portable computer system **400** of FIG. **4** in accordance with one embodiment (the Bluetooth embodiment) of the present invention. The layers of RF protocol stack **550** include baseband (link controller) layer **320**, Link Manager Protocol (LMP) layer **620**, Logical Link Control and Adaptation Protocol (L2CAP) layer **630**, Telephony Control Protocol (TCS) layer **640**, RFCOMM layer **650**, Service Discovery Protocol (SDP) layer **660**, and Object Exchange Protocol (OBEX) layer **670**.

Continuing with reference to FIG. **6**, in the present embodiment, baseband layer **320** carries out baseband protocols and other low-level link routines. LMP layer **620** is used for link set-up, security and control. L2CAP layer **630** supports higher level protocol multiplexing, packet segmentation and reassembly, and the conveying of quality-of-service information. TCS layer **640** defines the call control signaling for the establishment of speech and data calls

between Bluetooth devices. RFCOMM layer **650** provides emulation of serial ports over the L2CAP protocol **630**. SDP layer **660** provides a means for applications to discover which services are available, and the characteristics of the services. OBEX layer **670** enables the exchange of data objects. Additional information is provided by "Specification of the Bluetooth System, Core," version 1.0B, dated Dec. 1, 1999, herein incorporated by reference in its entirety.

FIG. **7**A is a data flow diagram **700** illustrating a name discovery process (e.g., process **800** of FIG. **8**) used by initiator device **720** to discover the user-friendly name **760** of a responding device **730** in accordance with one embodiment of the present invention. User-friendly name **760** can provide additional information to a user regarding responding device **730**. For example, user-friendly name **760** can be used to identify a printer by manufacturer, features (color or monochrome), and location (e.g., a floor or room number); refer to FIG. **7**B.

Continuing with reference to FIG. **7**A, in accordance with the present invention, initiator device **720** includes a memory cache **710**. With reference also to FIG. **4**, memory cache **710** can be incorporated into ROM **430**, RAM **410** or data storage device **490**. In the present embodiment, memory cache **710** includes user-friendly names **760** and address information **750** for each of a plurality of devices, such as responding device **730**. An exemplary embodiment of memory cache **710** is illustrated in FIG. **7**B, discussed below.

With reference to FIG. **7**A, in the Bluetooth embodiment, initiator device **720** and responding device **730** are Bluetooth-enabled devices. To simplify the discussion, the present invention is discussed for a single initiator device and responding device; however, it is understood that the present invention can be utilized with multiple initiator and responding devices.

In the present embodiment, initiator device **720** sends (broadcasts) an inquiry **740** which is received by responding device **730**. Responding device **730** must be discoverable, meaning that it is scanning for inquiry messages. Responding device **730** sends inquiry response **742** to initiator device **720** in response to inquiry **740**. Inquiry response **742** provides the Bluetooth device address information **750** (e.g., a numerical address or device access code) for responding device **730**.

In accordance with the present invention, initiator device **720** uses address information **750** to look up the corresponding user-friendly name **760** in memory cache **710**. User-friendly name **760** can be retrieved from memory cache **710** and displayed to a user on display device **440**. The user can then choose whether or not to establish a persistent connection with responding device **730** based on the information provided by user-friendly name **760**.

Thus, instead of sending a page and a name request, the present invention retrieves the user-friendly name **760** from memory. In accordance with the present invention, user-friendly name **760** can be discovered for responding device **730** without a name request and/or page, thereby also eliminating the need for a response to the name request and/or a response to a page. Consequently, the number of messages that need to be sent and received in order to complete the name discovery process is reduced, speeding up the process and conserving the power resources of initiator device **720** and responding device **760**.

In addition, potential errors associated with pages and name requests can be reduced or eliminated. For example, because pages and name requests are not always needed for name discovery in accordance with the present invention, the number of initiator devices sending pages and/or name requests at any given time will be lower. Therefore, the number of instances in which a responding device will ignore one page and/or name request because it is responding to another will also be lowered, reducing the frequency at which pages and name requests will time out because they are being ignored. In addition, should the responding device move out of range of the initiator device in the time between the inquiry message and the page and/or name request, the initiator device can still complete the name discovery process by retrieving the user-friendly name from cache memory. Thus, the predictability and efficiency of the name discovery process are enhanced by the present invention.

Furthermore, the present invention can be implemented consistent with and within the framework of the Bluetooth specification. As such, Bluetooth-enabled devices implementing the present invention remain compatible with legacy Bluetooth-enabled currently being used. Moreover, the present invention can also be incorporated into legacy Bluetooth devices, for example, by specifying file space for memory cache **710** and by installing appropriate program instructions.

FIG. **7**B illustrates one embodiment of a memory cache **710** for storing user-friendly names **760** and address information **750** for devices in accordance with the present invention. In this embodiment, address information **750** is used to index user-friendly names **760**; that is, if address information **750** is known, the corresponding user-friendly name **760** can be determined and retrieved from memory cache **710**. It is appreciated that other types of information uniquely identifying responding device **730** can be used to index user-friendly name **760** in memory cache **710**.

The name and address information can be loaded into memory cache **710** is any of a variety of ways. For example, in one embodiment, user-friendly names **760** and address information **750** can be copied from another device to initiator device **720**.

In another embodiment, user-friendly names **760** and address information **750** can be added to memory cache **710** by building on the name discovery process described by Section 6 of "Specification of the Bluetooth System, Core," version 1.0B, dated Dec. 1, 1999, herein incorporated by reference in its entirety. In this latter embodiment, initiator device **720** (FIG. **7**A) initially broadcasts an inquiry message that is received by responding device **730** (FIG. **7**A). Responding device **730** provides its device access code or numerical address (e.g., address information **750**) in response to the inquiry. Initiator device **720** then transmits a page to responding device **730**. Responding device **730** sends a page response to initiator device **720**, and initiator device **720** sends a name request to responding device **730**. Responding device **730** provides its user-friendly name **760** to initiator device **720** in response to the name request. In accordance with the present invention, initiator device **720** stores address information **750** and user-friendly name **760** in memory cache **710**.

Subsequently, when initiator device **720** broadcasts an inquiry and receives an inquiry response from responding device **730**, initiator device **720** can retrieve the user-friendly name **760** from memory cache **710** instead of sending a name request to responding device **730**.

FIG. **8** is a flowchart of the steps in a process **800** for discovering the name of a device in accordance with one embodiment of the present invention. In the present embodiment, process **800** is implemented by an initiator device **720** (FIG. **7**) such as portable computer system **400** (FIG. **4**). Process **800** is implemented as computer-readable program

instructions stored in a memory unit (e.g., ROM non-volatile **430** of FIG. **4**) and executed by a processor (e.g., processor **450** or DSP **422** of FIG. **4**). In the Bluetooth embodiment, initiator device **720** (e.g., portable computer system **400**) is Bluetooth-enabled.

In step **810** of FIG. **8**, with reference also to FIG. **7**A, initiator device **720** (e.g., portable computer system **400** of FIG. **4**) broadcasts a first wireless signal (inquiry **740**) over the nominal range of a typical Bluetooth device. Inquiry **740** is received by responding device **730**. In the Bluetooth embodiment, responding device **730** is Bluetooth-enabled.

In step **820** of FIG. **8**, with reference also to FIG. **7**A, initiator device **720** receives a second wireless signal (e.g., inquiry response **742**) from responding device **730**. Inquiry response **742** comprises address information **750** for responding device **730** (e.g., a device access code or numerical address). Inquiry response **742** can also include other information such as the class of device, the clock and the page scan mode for responding device **730**.

With reference to FIG. **7**A and to FIG. **8**, in step **830** in the present embodiment, initiator device **720** determines whether memory cache **710** includes the address information **750** specific to responding device **730**. If so, process **800** proceeds to step **870**. Otherwise, process **800** proceeds to step **840**.

Steps **840**, **850** and **860** are used to obtain and store in memory cache **710** a user-friendly name from responding device **730** in accordance with one embodiment of the present invention. In other embodiments, other methods can be used to obtain the user-friendly name **760** for responding device **730** and store it in memory cache **710**; for instance, the user-friendly name **760** can be copied to memory cache **710** from the memory of another device.

In step **840** of FIG. **8**, in one embodiment, initiator device **720** transmits a third wireless signal (e.g., a page) to responding device **730**. Responding device **730** sends a page response to initiator device **720**, and initiator device **720** next sends a name request to responding device **730**.

In step **850** of FIG. **8**, in one embodiment, responding device **730** provides its user-friendly name **760** to initiator device **720** in response to the name request.

In step **860** of FIG. **8**, with reference also to FIG. **7**A, in accordance with the present invention, initiator device **720** stores user-friendly name **760** and address information **750** in memory cache **710**. In the present embodiment, user-friendly names **760** are indexed by address information **750**, although it is appreciated that other information uniquely identifying responding device **730** can be used to index user-friendly names **760** in memory cache **710**.

In step **870** of FIG. **8**, and with reference to FIG. **7**A, in the present embodiment, initiator device **720** uses address information **750** to retrieve user-friendly name **760** from memory cache **710**.

In step **880** of FIG. **8**, with reference also to FIG. **7**A, in the present embodiment, user-friendly name **760** is displayed to a user on a display device **440**. The user can then decide, based on user-friendly name **760**, whether to establish a persistent connection between initiator device **720** and responding device **730**.

In step **890** of FIG. **8**, with reference also to FIG. **7**A, the information in memory cache **710** (e.g., address information **750** and user-friendly name **760**) is maintained current and up-to-date. In the present embodiment, when a persistent connection is made between initiator device **720** and responding device **730**, the user-friendly name **760** is supplied by responding device **730** to initiator device **720**. That is, even though a name request was not sent by initiator device **720** in accordance with the present invention, responding device **730** automatically provides user-friendly name **760** to initiator device **720** when a persistent connection is made between the devices. The user-friendly name **760** provided in this manner can be used to update the memory cache **710**, in case the name has changed since a previous connection between initiator device **720** and responding device **730**. Thus, memory cache **710** will contain the most recent known user-friendly name **760** for each responding device **730**.

In one embodiment, an aging scheme is applied when the number of entries (e.g., user-friendly names **760** and addresses **750**) in memory cache **710** reaches a maximum amount. The maximum amount of entries can be user-specified, depending on the amount of memory available for memory cache **710**. In one embodiment, the maximum amount is set at 50 entries. When the maximum number of entries in memory cache **710** is reached, a new entry in memory cache **710** will replace the entry that is, for example, the oldest or the least frequently accessed.

In the present embodiment, entries in memory cache **710** are sorted according to how long it has been since they were last accessed, regardless of whether a persistent connection was made to the device represented by that entry (that is, the user-friendly name **760** may have been retrieved from memory and displayed to a user, but a persistent connection was not made to responding device **730**). Other types of schemes can be used to remove entries that are not frequently accessed or that are out of date.

In summary, the present invention provides a device and method that can speed up the Bluetooth name discovery process, and that can increase the efficiency and predictability of the name discovery process by reducing the problems that occur when pages and/or name requests collide or when devices move out of range of each other. The present invention also provides a device and method can reduce the burden on the limited power resources available to many types of Bluetooth devices. In addition, the present invention provides a device and method that can be implemented in Bluetooth-enabled devices, that is consistent with the Bluetooth specification, and that can be incorporated into legacy Bluetooth devices.

The preferred embodiment of the present invention, efficient discovery of devices in a Bluetooth environment, is thus described. While the present invention has been described in particular embodiments, it should be appreciated that the present invention should not be construed as limited by such embodiments, but rather construed according to the following claims.

What is claimed is:

1. In an initiator device having a memory for responding-device data and a wireless transceiver, a method for discovering a name of a responding device comprising:

broadcasting a first wireless signal to be received by said responding device;

receiving a second wireless signal from said responding device, said second wireless signal sent in response to said first wireless signal and comprising an address for said responding device;

accessing said memory comprising names of devices using said second wireless signal;

determining whether a name for said responding device is present in said memory;

transmitting a wireless request for a name to said responding device provided a name for said responding device is absent from said memory;

receiving a name for said responding device in response to said wireless request; and

storing said name received from said responding device in said memory, wherein said name is indexed in said memory using said address for said responding device and wherein said name is retrievable from said memory using said address.

2. The method as recited in claim **1** comprising:

updating said memory when said name for said responding device is changed.

3. The method as recited in claim **1** comprising:

displaying said name on a display of said initiator device.

4. The method as recited in claim **1** wherein said initiator device and said responding device are Bluetooth-enabled devices.

5. The method as recited in claim **1** wherein said initiator device is a portable computer system.

6. The method as recited in claim **1** comprising:

removing from said memory an entry for one of said devices when a total number of memory entries exceeds a predetermined limit, said entry comprising a name and an address.

7. The method as recited in claim **6** wherein an entry is removed from said memory according to an aging scheme, wherein said aging scheme ranks entries according to frequency of use.

8. In an initiator device having a memory and a wireless transceiver, a method for identifying a responding device by name comprising:

broadcasting a first wireless signal to be received by said responding device;

receiving a second wireless signal from said responding device, said second wireless signal sent in response to said first wireless signal and comprising an address for said responding device;

sending a wireless paging signal to said responding device;

receiving from said responding device a response to said wireless paging signal;

determining whether a name for said responding device is present in said memory of said initiator device;

transmitting a wireless request for a name to said responding device provided a name for said responding device is absent from said memory;

receiving a name for said responding device in response to said wireless request;

storing said name and said address received from said responding device in said memory, said name indexed by said address; and

using said name address to retrieve said address name from said memory.

9. The method as recited in claim **8** comprising:

displaying said name on a display of said initiator device.

10. The method as recited in claim **8** comprising:

updating said memory when said name for said responding device is changed.

11. The method as recited in claim **8** wherein said initiator device and said responding device are Bluetooth-enabled devices.

12. The method as recited in claim **8** wherein said initiator device is a portable computer system.

13. The method as recited in claim **8** further comprising:

storing in said memory an entry for each of a plurality of other responding devices, said entry comprising a name and an address.

14. The method as recited in claim **13** further comprising:

removing from said memory an entry for one of said responding devices when a total number of memory entries exceeds a predetermined limit.

15. The method as recited in claim **13** wherein an entry is removed from said memory according to an aging scheme, wherein said aging scheme ranks entries according to frequency of use.

16. A wireless communication device comprising:

a bus;

a wireless transceiver unit coupled to said bus and for communicating with responding devices;

a memory coupled to said bus; and

a processor coupled to said bus, said processor for performing a method for identifying a responding device by name, said method comprising:

broadcasting a first wireless signal to be received by said responding device;

receiving an address for said responding device in response to said first wireless signal;

determining whether a name for said responding device is present in said memory;

transmitting a first wireless request for a name to said responding device provided a name for said responding device is absent from said memory;

receiving said name for said responding device in response to said first wireless request;

storing said address and said name received from said responding device in said memory, said name indexed by said address; and

retrieving said name from said memory to subsequently identify said responding device in lieu of performing a second wireless request after said first wireless request, wherein said name is retrieved from said memory using said address.

17. The wireless communication device of claim **16** wherein said retrieving step comprises:

broadcasting a second wireless signal to be received by said responding device;

receiving said address from said responding device in response to said second wireless signal; and

retrieving from said memory said name corresponding to said address.

18. The wireless communication device of claim **16** comprising:

a display device for displaying said name obtained from said memory.

19. The wireless communication device of claim **16** wherein said method comprises:

updating said memory when said name for said responding device is changed.

20. The wireless communication device of claim **16** wherein said wireless communication device and said responding device are Bluetooth-enabled devices.

21. The wireless communication device of claim **16** wherein said wireless communication device is a portable computer system.

22. The wireless communication device of claim **16** wherein said storing step comprises:

storing in said memory an entry for each of a plurality of responding devices, said entry comprising a name and an address.

23. The wireless communication device of claim **22** wherein said storing step further comprises:

removing from said memory an entry for one of said plurality of responding devices when a total number of memory entries exceeds a predetermined limit.

24. The wireless communication device of claim **22** wherein an entry is removed from said memory according to an aging scheme, wherein said aging scheme ranks entries according to frequency of use.

* * * * *