16085 U.S. PTO
092905

PTO/SB/05 (04-05)
Approved for use through 07/31/2006. OMB 0651-0032
U.S. Patent and Trademark Office. U.S. DEPARTMENT OF COMMERCE
Under the Paperwork Reduction Act of 1995, no persons are required to respond to a collection of information unless it displays a valid OMB control number.

UTILITY PATENT APPLICATION TRANSMITTAL

(Only for new nonprovisional applications under 37 CFR 1.53(b))

Attorney Docket No.	EC04003USU
First Inventor	Anton Monk
Title	Physical Layer Transmitter for ...
Express Mail Label No.	ED 630230335 US

112987 U.S. PTO
11/241748
092905

APPLICATION ELEMENTS

See MPEP chapter 600 concerning utility patent application contents.

ADDRESS TO: **Commissioner for Patents**
P.O. Box 1450
Alexandria VA 22313-1450

1. ☐ **Fee Transmittal Form** (e.g., PTO/SB/17)
   (Submit an original and a duplicate for fee processing)
2. ☑ **Applicant claims small entity status.** See 37 CFR 1.27.
3. ☑ **Specification** [*Total Pages* 46]
   Both the claims and abstract must start on a new page
   (For information on the preferred arrangement, see MPEP 608.01(a))
4. ☑ **Drawing(s)** (*35 U.S.C. 113*) [*Total Sheets* 25]
5. **Oath or Declaration** [*Total Sheets* _____]
   a. ☐ Newly executed (original or copy)
   b. ☐ A copy from a prior application (37 CFR 1.63(d))
   (for continuation/divisional with Box 18 completed)
      i. ☐ DELETION OF INVENTOR(S)
      Signed statement attached deleting inventor(s) name in the prior application, see 37 CFR 1.63(d)(2) and 1.33(b).
6. ☐ **Application Data Sheet.** See 37 CFR 1.76
7. ☐ **CD-ROM or CD-R** in duplicate, large table or Computer Program *(Appendix)*
   ☐ Landscape Table on CD
8. **Nucleotide and/or Amino Acid Sequence Submission**
   (if applicable, items a. – c. are required)
   a. ☐ Computer Readable Form (CRF)
   b. Specification Sequence Listing on:
      i. ☐ CD-ROM or CD-R (2 copies); or
      ii. ☐ Paper
   c. ☐ Statements verifying identity of above copies

ACCOMPANYING APPLICATION PARTS

9. ☐ **Assignment Papers** (cover sheet & document(s))
   Name of Assignee _____
10. ☐ **37 CFR 3.73(b) Statement** *(when there is an assignee)* ☐ **Power of Attorney**
11. ☐ **English Translation Document** *(if applicable)*
12. ☐ **Information Disclosure Statement** (PTO/SB/08 or PTO-1449)
    ☐ Copies of citations attached
13. ☐ **Preliminary Amendment**
14. ☐ **Return Receipt Postcard** (MPEP 503)
    (*Should be specifically itemized*)
15. ☐ **Certified Copy of Priority Document(s)**
    (if foreign priority is claimed)
16. ☑ **Nonpublication Request** under 35 U.S.C. 122(b)(2)(B)(i). Applicant must attach form PTO/SB/35 or equivalent.
17. ☐ Other: _____

18. If a CONTINUING APPLICATION, *check appropriate box, and supply the requisite information below and in the first sentence of the specification following the title, or in an Application Data Sheet under 37 CFR 1.76:*

☐ Continuation ☐ Divisional ☐ Continuation-in-part (CIP) of prior application No.: .....

Prior application information: *Examiner* _____ *Art Unit:* _____

19. CORRESPONDENCE ADDRESS

☑ The address associated with Customer Number: 34408 ***OR*** ☐ Correspondence address below

Name					
Address					
City		State		Zip Code	
Country		Telephone		Email	

Signature		Date	September 29, 2005
Name (Print/Type)	Francisco A. Rubio-Campos	Registration No. (Attorney/Agent)	45,358

This collection of information is required by 37 CFR 1.53(b). The information is required to obtain or retain a benefit by the public which is to file (and by the USPTO to process) an application. Confidentiality is governed by 35 U.S.C. 122 and 37 CFR 1.11 and 1.14. This collection is estimated to take 12 minutes to complete, including gathering, preparing, and submitting the completed application form to the USPTO. Time will vary depending upon the individual case. Any comments on the amount of time you require to complete this form and/or suggestions for reducing this burden, should be sent to the Chief Information Officer, U.S. Patent and Trademark Office, U.S. Department of Commerce, P.O. Box 1450, Alexandria, VA 22313-1450. DO NOT SEND FEES OR COMPLETED FORMS TO THIS ADDRESS. **SEND TO: Commissioner for Patents, P.O. Box 1450, Alexandria, VA 22313-1450.**
If you need assistance in completing the form, call 1-800-PTO-9199 and select option 2.

DISH 1002

CERTIFICATE OF EXPRESS MAILING UNDER 37 C.F.R. § 1.10

I hereby certify that the attached patent application (including supporting documents) is being deposited with the United States Postal Service with "Express Mail Post Office to Addressee" Mailing Label Number ED 630230335 US addressed to:

Commissioner for Patents
P.O. Box 1450
Alexandria, VA 22313-1450

on September 29, 2005.

Mariana Paula Noli

U.S. Express Mail No.: ED 630230335 US
Filing Date: September 29, 2005

PATENT
Docket No. EC04003USU

PHYSICAL LAYER TRANSMITTER FOR USE IN A BROADBAND LOCAL AREA NETWORK

INVENTORS

ANTON MONK

RON PORAT

WEE-PENG GOH

MAGNUS BERGGREN

RON LEE

EDWARD WARNER

BRETT BERNATH

&

YUSUF OZTURK

BACKGROUND OF THE INVENTION

1. Reference to Earlier-Filed Applications

[001] This application claims priority under Section 119(e) to: (a) U.S. Provisional Application Serial No. 60/633,091 titled "Physical Layer Transmitter for Use in a Broadband Local Area Network," filed December 2, 2004; (b) U.S. Provisional Application Serial No. 60/632,797 titled "A Broadband Local Area Network," filed December 2, 2004; (c) U.S. Provisional Application Serial No. 60/633,002 titled "Multiple Access Controller for a Broadband Coaxial Network," filed December 2, 2004; and (d) U.S. Provisional Application Serial No. 60/632,856 titled "Interface for a Broadband Coaxial Network," filed December 2, 2004, all of which are incorporated herein, in their entirety, by this reference.

2. Field of Invention

[002] The invention relates to broadband communication networks and in particular to broadband communication networks utilizing coaxial cable.

3. Related Art

[003] The worldwide utilization of external television ("TV") antennas for receiving broadcast TV, and of cable television and satellite TV is growing at a rapid pace. These TV signals from an external TV antenna, cable TV and satellite TV, such as a direct broadcast satellite ("DBS") system, are usually received externally to a building (such as a home or an office) at a point-of-entry ("POE"). There may be multiple TV receivers and/or video monitors within the building and these multiple TV receivers may be in signal communication with the POE via a broadband cable network that may include a plurality of broadband cables and broadband cable splitters. Generally, these broadband cable splitters distribute downstream signals from the POE to various terminals (also known as "nodes") in the building. The nodes may be connected to various types of Customer Premise Equipment ("CPEs") such as cable converter boxes, televisions, video monitors, cable modems, cable phones and video game consoles.

[004] Within a typical home, there may be a mixture of coaxial cables of varying quality, such as RG-59, RG-6, RG-6 quad shield, creating at times a less than optimal RF environment within the coaxial cables. Further, typical homes do little or no termination of cable outlets and that results in the introduction of RF interference into the coaxial cables in the form of signal reflections and ingress. Another problem often encountered with typical home coaxial cable configurations is that of multiple splitters of varying

quality and frequency response characteristics, which may create a problem for signal distribution and at times limit the use of the coaxial network for local area networking, thus requiring a more controlled or higher quality cabling and at times, higher frequency ranges.

[005] Typically, these broadband cables and broadband cable splitters are implemented utilizing coaxial cables and coaxial cable splitters, respectively. Additionally, in the case of cable TV or satellite TV, TV receivers with cable or satellite converter boxes, also known as set-top boxes ("STBs"), are connected between the TV receivers and the broadband cable network.

[006] Typically, a STB connects to a coaxial cable from a network node (such as the wall outlet terminal) to receive cable TV and/or satellite TV signals. Usually, the STB receives the cable TV and/or satellite TV signals from the network node and converts them into TV signals that may be received by the TV receiver and/or video signals that may be received by a video monitor.

[007] In FIG. 1, an example known broadband cable network 100 (also known as a "cable system" and/or "cable wiring") is shown within a building 102 (also known as customer premises or "CP") such as a typical home or office. The broadband cable system 100 may be in signal communication with an optional cable service provider 104, optional broadcast TV station 106, and/or optional DBS satellite 108, via signal path 110, signal path 112 and external antenna 114, and signal path 116 and DBS antenna 118, respectively. The broadband cable system 100 also may be in signal communication with

optional CPEs such as STBs 120, 122 and 124, via signal paths 126, 128 and 130, respectively.

[008] In FIG. 2, another example of a known broadband cable system is shown within a building (not shown) such as a typical home. The cable system 200 may be in signal communication with a cable provider (not shown), satellite TV dish (not shown), and/or external antenna (not shown) via a signal path 202 such as a main coaxial cable from the building to a cable connection (not shown) outside of the building. The cable system 200 may include a multi-tap device 204 which allows signal distribution to neighboring homes, a POE 210 to the home, N:1 Splitters 214, 222, 230, and 234, and Node Devices 228, 250, 252, 254, 256, 258, and 260.

[009] Within the cable system 200, the Multi-Tap 204 may be in signal communication with the POE 210 via signal path 208. The POE 210 may be the connection point from the cable provider which is typically located external to the building of the cable system 200. The POE 210 may be implemented as a coaxial cable connector, transformer and/or filter.

[0010] The N:1 Splitter 214 acts as the main splitter (sometimes also called a Root Node) and may be in signal communication with N:1 Splitter 222, Node Device 228, and N:1 Splitter 230 via signal paths 216, 218 and 220, respectively. The N:1 Splitter 222 may be in signal communication with Node Devices 250, 252, and 254 via signal paths 224, 225 and 226, respectively. The N:1 Splitter 230 may be in signal communication with Node Device 260 and N:1 Splitter 234, via signal paths 240 and 232, respectively, and N:1 Splitter 234 in turn may be in signal communication with Node Devices 256 and 258 via

signal paths 236 and 238, respectively. The N:1 Splitters 214, 222, 230 and 234 may be implemented as coaxial cable splitters. The Node Devices may be comprised of numerous well known STB units such as cable television set-top boxes and/or satellite television set-top boxes, as well as various video and multimedia devices typically found in the home or office. Typically, the signal paths 208, 212, 216, 218, 220, 224, 225, 226, 232, 236, 238, and 240 may be implemented utilizing coaxial cables.

[0011] In an example operation, the cable system 200 would receive CATV, and/or satellite radio frequency ("RF") TV signals 262 from the Multi-Tap 204 via signal path 208 at the POE 210. The POE 210 may pass, transform and/or filter the received RF signals to a second RF signal 264 that may be passed to N:1 Splitter (Root Node) 214 via signal path 212. The N:1 Splitter 214 may then split the second RF signal 264 into RF signals 230, 268 and 270. The RF signal 230 is then passed to N:1 Splitter 222 and the RF signals 272, 274 and 276 are passed to Node Devices 250, 252 and 254 via signal paths 224, 225 and 226, respectively. If the Node Device is a set-top box, the Node Device may convert the received RF signal into an RF signal such as Channels 3 and 4, or baseband signals such as Video and S-Video, or Components such as Y, Pr, Pb and Audio signals (not shown) that may be passed to a video monitor or a TV set (not shown) in signal communication with the set-top box.

[0012] In recent years, numerous consumer electronics appliances and software applications have been developed and continue to be developed. Thus, the numbers and types of CPEs that can be utilized in homes increase. These include television sets, video monitors, DVD players, Personal Computers ("PCs"), STBs, cable modems, cable

phones, video game consoles, audio components, as well as various media units containing storage devices, such as Digital Video Recorders (DVRs) that are capable of storing various forms of multi-media information on a hard magnetic disk or optical drives for later retrieval and use by any device connected to it. Furthermore, there is a growing need for different CPEs to communicate with each other in the home and be able to share storage, display and other capabilities. As an example, users in a home may desire to simultaneously play network video games between different rooms in the home. Additionally, in another example, users in a home may want to share other types of digital data (such as video and/or computer information) between different devices in different rooms in a home.

[0013] Unfortunately, very few homes have home networks capable of providing the data rates and reliability required in order to allow video and audio networking within the home. Furthermore, most multimedia devices are not in the vicinity of the various home networking connection points, such as Ethernet or phone lines. For this reason, the existing coaxial cable within the home is a very attractive medium for providing such a networking functionality. The home coaxial cable has enormous amount of bandwidth available at frequencies not currently used by the cable TV services, it is a contained medium that mostly does not suffer external interference from other services such as the wireless medium, and most multimedia devices such as TV sets, STBs, DVRs, DVDs, and multimedia PCs are already connected to the home coaxial cable.

[0014] However, most broadband cable networks (such as the examples shown in both FIG. 1 and FIG. 2) presently utilized within most existing buildings are not configured to

allow for easy networking between CPEs for several reasons: first, the devices that connect to the coaxial cable in the home are traditionally the Consumer Electronics (CE) and entertainment-related devices that have not traditionally been networked devices. This is about to change for the reasons stated above. The coaxial network is the ideal networking channel since these devices do not require any new connection since they are already connected to the coaxial network. Second, the coaxial network is already being used for TV distribution; hence one needs to ensure that utilizing it for networking does not impair existing services. Third, most broadband cable networks utilize cable splitters that are designed to split an incoming signal from the POE into numerous split signals that are passed to the different nodes in different rooms. These splitters have been designed to not allow or to minimize the signal transfer between output ports; thus the existing conventional wisdom is that the use of splitters in the existing broadband cable networks prevents networking between devices in the network because signals returning from the devices cannot be routed back through the splitters, *i.e.*, cannot "jump" a splitter.

[0015] As an example, in a typical home the signal splitters are commonly coaxial cable splitters that have an input port and multiple output ports. Generally, the input port is known as a common port and the output ports are known as tap ports. These types of splitters are generally passive devices and may be constructed using lumped element circuits with discrete transformers, inductors, capacitors, and resistors and/or using strip-line or microstrip circuits. These types of splitters are generally bi-directional because

they may also function as signal combiners, which sum the power from the multiple tap ports into a single output at the common port.

[0016] Presently many CPEs utilized in modern cable and DBS systems, however, have the ability to transmit as well as receive. If a CPE is capable of transmitting an upstream signal, the transmitted upstream signal from that CPE typically flows through the signal splitters back to the POE and to the cable and/or DBS provider. In this reverse flow direction, the signal splitters function as signal combiners for upstream signals from the CPEs to the POE. Usually, most of the energy from the upstream signals is passed from the CPEs to the POE because the splitters typically have a high level of isolation between the different connected terminals resulting in significant isolation between the various CPEs.

[0017] The isolation creates a difficult environment in which to network between the different CPEs because the isolation results in difficulty for transmitting two-way communication data between the different CPEs. Unfortunately, CPEs are becoming increasingly complex and a growing number of users desire to inter-connect these multiple CPEs into a network where one can share media and other functionality between connected devices.

[0018] Therefore, there is a need for a system and method to connect a variety of CPEs into a local network, such as a local area network ("LAN"), within a building such as a home or office, while utilizing an existing coaxial cable network within the building. Additionally, there is a need for the system and method to have the capability of allowing

the user to incorporate a variety of newly-developed CPEs into the local network quickly and easily.

SUMMARY

[0019] A transmitter ("PHY Transmitter") for communicating between a plurality of nodes in a multi-media network communication system ("MNCS") utilizing a broadband cable network ("BCN") operating at the physical layer (Layer 1) within the ISO/OSI Network Model (or the Link layer of the TCP/IP Network Model) is disclosed. The PHY Transmitter provides the interface to the coaxial cable within the BCN, and performs all of the necessary RF, analog and digital processing required for transmitting MAC messages on the coaxial communications channel. The PHY Transmitter enables direct node to node communications over the coaxial channel within the BCN. The PHY Transmitter may be based on a Time Division Multiple Access (TDMA)/Time Division Duplex (TDD) scheme using multiple independent constellations and multi-carrier modulation. The PHY Transmitter may also include error correction coding, randomizing and modulation, preamble insertion, encryption and other functions under direction and control of an adjacent MAC Layer or Data Link Layer.

[0020] The PHY Transmitter may be implemented as a transmitting portion of each communicating node within the plurality of nodes where the PHY Transmitter is capable of constructing and transmitting a data signal to the plurality of nodes, with at least one receiving node within the plurality of nodes in signal communication with the transmitting node. The data signal may be constructed in the form of a block of modulated symbols called a "packet." The packets may consist of multiple types, with

each type comprising multiple segments, containing various types of information dependent on the specific functionality the packet is required to perform. The at least one receiving node is capable of receiving and decoding the packet data signal and performing various functions in response to its decoding of the data signal. The at least one receiving node may also include a PHY Transmitter capable of constructing its own data signal and transmitting this data signal independently or in response to the received data signal.

[0021] In an example implementation, the PHY Transmitter, using data from a MAC layer, may be part of a logical mesh network whereby each node in the network is able to engage in two-way communications with every other node in the network. The PHY Transmitter may further be able to transmit a specific waveform to each node within the network, based on the link characteristics to that node, according to a process that may be controlled by a Network Coordinator ("NC") that is capable of resource management within the BCN.

[0022] As an example of operation, the PHY Transmitter is capable of transmitting several types of signals, including data packets, link control packets, probe packets and Beacon packets, within the BCN. For example, the PHY Transmitter may transmit a probe signal or several probe signals to a plurality of receiving nodes and receive a plurality of response signals from the corresponding receiving nodes of the plurality of receiving nodes, wherein each of the response signals includes a channel characterization of the link. This is accomplished by the receiving node analyzing the received signal and comparing it to an *a priori* known transmit signal format. The channel response

information is then sent back to the transmitting node that can now change its transmission format to optimize the link communications to the channel response.

[0023] Other systems, methods, features and advantages of the invention will be or will become apparent to one with skill in the art upon examination of the following figures and detailed description. It is intended that all such additional systems, methods, features and advantages be included within this description, be within the scope of the invention, and be protected by the accompanying claims.

BRIEF DESCRIPTION OF THE DRAWINGS

[0024] The invention can be better understood with reference to the following figures. The components in the figures are not necessarily to scale, emphasis instead being placed upon illustrating the principles of the invention. In the figures, like reference numerals designate corresponding parts throughout the different views.

[0025] FIG. 1 shows a block diagram of an example implementation of a known broadband cable system within a building.

[0026] FIG. 2 shows a block diagram of another example implementation of a known broadband cable system within the building shown in FIG. 1.

[0027] FIG. 3 shows a functional diagram showing the communication between the different nodes shown in the MNCS arranged in a virtual logical mesh network, and also the fact that the same link between two nodes may behave differently in different directions.

[0028] FIG. 4 shows a functional block diagram showing the communication protocol stack used in the communications layers above the PHY Transmitter used in the MCNS.

[0029] FIG. 5 shows a simplified block diagram of the three subsystems of an example implementation of the PHY Transmitter..

[0030] FIG. 6 shows a table showing the packet types and their properties used in an example implementation of the PHY Transmitter of FIG. 5.

[0031] FIG. 7 shows a table showing the bit to sub-carrier mapping scheme used by the Robust packets of an example implementation of the PHY Transmitter of FIG. 5.

[0032] FIG. 8 shows a block diagram of the sub-carrier mapping locations of the OFDM modulation and the Table of FIG. 7. The Sub-Carriers numbers (SC#) in the table correspond to the Sub-Carrier locations of FIG. 8.

[0033] FIG. 9 shows a block diagram showing the general structure of a transmit packet used in an example implementation of a PHY Transmitter.

[0034] FIG. 10 shows a block diagram showing the steps in the construction of a PHY Transmit packet from the provided MAC Protocol DATA Unit ("MPDU") packet by an example implementation of a PHY Transmitter.

[0035] FIG. 11 shows a form and format for data scrambling by an example implementation of a PHY Transmitter.

[0036] FIGs. 12, 13, 14, 15, 16, 17A and 17B show respectively, BPSK, QPSK, 8-QAM, 16-QAM, 32-QAM, 64-QAM, 128-QAM and 256-QAM Encoding Tables.

[0037] FIG. 18 shows a table containing the normalization factor K_{MOD} for various modulation modes.

[0038] FIG. 19 shows a form and format for byte scrambling by an example implementation of a PHY Transmitter.

[0039] FIG. 20 shows a form and format for cyclic prefix insertion by an example implementation of a PHY Transmitter.

[0040] FIG. 21 shows a simplified block diagram of the structure of five possible preamble options used in a PHY packet constructed by an example implementation of a PHY Transmitter.

[0041] FIG. 22 shows a table that provides an example of a specific example implementation of a PHY transmitter.

[0042] FIG. 23 shows a diagram of the zero-order hold and DAC compensation found in an example implementation of a PHY transmitter.

[0043] FIG. 24 shows the form and format for the low IF operation performed by an example implementation of a PHY Transmitter.

DETAILED DESCRIPTION

[0044] In the following description of the preferred embodiment, reference is made to the accompanying drawings that form a part hereof, and in which is shown by way of illustration a specific embodiment in which the invention may be practiced. It is to be understood that other embodiments may be utilized and structural changes may be made without departing from the scope of the present invention.

[0045] In FIG. 3, a functional diagram 300 showing the logical communications between various nodes of the coaxial home network, Node A 302, Node B 304, Node C 306, and

Node D 308, in the form of a virtual logical mesh network is shown. Even though the coaxial network may utilize the same frequency for communications between the various nodes in the network, the frequency channel response between any pair of nodes and in any direction may be significantly different. Hence, to create the logical network shown in FIG. 3, there has to be concern about the communications capabilities between each and every node pair. Also, these communications capabilities should be optimized; otherwise the channel may be very poorly utilized. The principle reason for this is that since the network utilizes TDMA, if any of the links are of poor quality, it will take more of the network resources (time segments) to transmit a certain amount of information, and less time will be available for other transmissions on the network. It is therefore of utmost importance for the network to optimize each of the links in FIG. 3 in each direction, in order for the network to operate well.

[0046] The nodes 302, 304, 306 and 308 may be interconnected between node pairs utilizing corresponding inter-node communication channels between the node pairs as shown in FIG. 3. Therefore, inter-node channels between Node A 302, Node B 304, Node C 306 and Node D 308 may be asymmetric and thus utilize different modulation schemes depending on the direction of the signals between the node pairs. As a result, the typically asymmetric inter-node channels between Node A 302, Node B 304, Node C 306 and Node D 308 may be described by the corresponding direction-dependent node channels AB, BA, AC, CA, BC, CB, AD, DA, BD, DB, CD and DC.

[0047] As an example, node A 302 is in signal communication with node B 304 via signal paths 310 and 312. Signal path 312 corresponds to the AB channel direction and

signal path 310 corresponds to the BA channel direction. Additionally, node A 302 is also in signal communication with node C 306 via signal paths 322 and 324. Signal path 322 corresponds to the AC channel and signal path 324 corresponds to the CA channel. Similarly, node A 302 is also in signal communication with node D 308 via signal paths 314 and 316. Signal path 316 corresponds to the AD channel and signal path 314 corresponds to the DA channel; the same applies for all other network node pairs.

[0048] In this example, the AB channel corresponds to the channel utilized by node A 302 transmitting to node B 304 along signal path 312. The BA channel corresponds to the reverse channel utilized by node B 304 transmitting to node A 302 along signal path 310.

[0049] In an example of operation, in order for node A 302 to transmit the same message to both node B 304 and node C 306 using the AB channel along signal path 312 and AC channel along signal path 322, node A 302 will need to transmit (*i.e.*, "unicast") the same message twice, once to node B 304 and a second time to node C 306 because channel AB and channel AC may have a different channel response and the same physical transmission may not be appropriate for both transmissions. In order to minimize the requirement for sending the same information to multiple nodes in the network, resulting in a significant inefficiency, the proposed implementation may utilize a system by which probe messages between all nodes and in all directions are exchanged under the control of the corresponding MAC layers and under the supervision of a Network Controller ("NC"). These probe structures are known to both the transmitter and receiver; hence once a receiver receives a probe message, it can recognize the corresponding channel

response by comparing the received waveform of the probe to the known transmitted waveform of the probe. Once this information is gained, the receiver can then inform the transmitter of the best modulation format to use for the specific channel. Since the coaxial network is relatively static in nature, and changes slowly, channel probing for link optimization is an infrequent requirement. Also, if a link performs poorly, an automatic channel response re-optimization ensues.

[0050] To enable the communications over the network during network admission and for the purpose of channel optimization and important control information, special types of packets, called Robust Packets, may be used. These packets can be transmitted and received reliably by every node in the network. Due to their construction, Robust Packets permit very reliable unicast and broadcast communications in the network. However, they are very inefficient and are used only for critical control functions, such as communications between nodes before channel optimization and for distributing network timing.

[0051] The network topology shown in FIG. 3 is a full-mesh peer-to-peer network. The PHY Transmitter may utilize other forms of network topology, which forms may include a partial-mesh network and a star network. In a partial-mesh network, the logical link between any two nodes in either direction may not be established for a variety of reasons including both network communications requirements and network optimization characteristics or others.. In a star network, the optimized link scheme is established between a node device acting as the NC and each of the remaining nodes in the network and all communications in the network are through the NC. Another form of network

topology may be a hybrid network that allows a combination of a star topology with selected peer-to-peer ("p-t-p") links, where the p-t-p is chosen based on several factors including network communications needs and/or optimizations of the available throughput; for example, only very high throughput links are accommodated for p-t-p links.

[0052] The above discussion shows the need for the PHY transmitter to be able to transmit three types of packets in the network: probe packets, robust packets and data packets. In general, these packet types accommodate all the packet types minimally necessary for network operations, although other packet types may also be implemented.

[0053] In FIG. 4, another functional diagram 400 showing the interfaces and functional relationships between the subsystems or layers of an example implementation of an MNCS communications network. FIG. 4 shows the communications protocol stack used in an example implementation of the network where the PHY Transmitter provides the transmit portion of the PHY Layer 402. In FIG. 4, PHY Layer 402 provides the interface to the coaxial cable 436 and performs all the necessary RF, analog and digital signal processing required in order to transmit and receive the MAC messages on the coaxial cable 436. The MAC Layer 404 is in communication with the PHY Layer 402 and the Link Layer Controller (LLC) 406. The MAC addresses and the associated internal control and messaging information are provided by a MAC transmitter (not shown) operating at the MAC Layer 404 (Layer 2). The MAC Layer 404 controls network resources to ensure that quality of service is met for each flow of data admitted to the BCN. The MAC Layer 404 also performs the function of maintaining the quality of

connection with other nodes in the BCN, admissions into the network, requesting resource allocations, optimizing link throughput such as selecting the modulation scheme, election of the NC, encryption key handling, and other functions related to the management, communications, control and status of communications between the nodes in the BCN.

[0054] Another important element of the network is its ability to adapt existing communications protocols and services to the coaxial network. This is done by the adaptation layer 408 which maps communications protocols and services such as Ethernet, IEEE 1394, MPEG-TS, USB and others to map to the MNCS coaxial network protocol. So an isochronous service such as MPEG-TS can be mapped to the isochronous services provided by the MNCS coaxial network protocol ensuring the necessary minimal additional jitter and delay. Similarly, asynchronous Ethernet packets can flow through the coaxial network over the asynchronous or isochronous services of the MNCS.

[0055] In FIG. 5, a simplified block diagram of the major subsystems of an example implementation in which a PHY Transmitter is a part of the Modem Subsystem 504 is shown. In this example implementation, there are three major subsystems: (a) the MAC Subsystem 502; (b) the Modem Subsystem 504; and (c) the RF Subsystem 506. The MAC Subsystem 502 provides the interface between the user applications including the networking higher layers (not shown) and the Modem Subsystem 504 via communication path 510 and is the source and also the destination of network data and control information. The MAC Subsystem 502 constructs the data and control packets with

media access control ("MAC") addresses and also the associated internal control and messaging information to be transmitted over the network to the Modem Subsystem 504 and the RF Subsystem 506 via Signal Path 512. The MAC Subsystem 502 may also perform Cyclic Redundancy Check ("CRC") encoding on all transmitted packets and CRC decoding on all received packets to ensure packet data integrity.

[0056] The Modem Subsystem 504 performs the formatting, encoding and modulation of the MAC packets received from the MAC Subsystem 502 and the demodulation, decoding and formatting of received packets from the RF Subsystem 506. The modulator section (not shown) accepts the MAC packets and the corresponding control information from the MAC Subsystem 502 and may perform forward error correction encoding, scrambling and DES encryption, and send the encoded information to the modulator (not shown).

[0057] The RF Subsystem 506 receives the modulated packets from the Modular Subsystem 504 via Signal Path 514 and up-converts the modulated packets to RF signals with a transmit frequency in accordance with the transmitted control information and amplifies the RF signal according to the desired power signal chosen by the transmitted control information. Both the transmit center frequency and the transmit power level may be adjusted according to predetermined values that allow both the shifting of the signals to another channel with a different modulation scheme and an adjustment in the power level that can be controlled on a packet by packet basis.

[0058] FIG. 6 shows a table that defines the three main packet types supported by the PHY Layer 402, FIG. 4, for both data transmission and PHY Layer calibration in an

example implementation. It will be apparent to those of ordinary skill in the art that the packets used may be of various types, each with multiple formats; however, these three types have been chosen to illustrate the type of functions that may typically be performed by the PHY Transmitter, which is part of the Modem Subsystem 504, FIG. 5, in one possible embodiment, and are not meant to be exclusive of other possible formats and types.

[0059] As shown in Table 1, FIG. 6, there are three packet types defined. The first type is defined as a Probe Packet, the second as a Robust Packet, and the third as a MAC Protocol Data Unit ("MPDU") packet. Probe Packets are used for multiple functions; the main function has been discussed above and it is to probe the network and its frequency response for inter-node link throughput optimization. However, there are additional Probe Packets described in Table 1. In total, there are three types of probe packets that may be used for network link optimizations and PHY layer calibration and maintenance: (a) Error Vector Measurements ("EVM") Probes which are the channel response probes used for network frequency response and modulation optimization; (b) IQ Imbalance ("IQI") and Hardware/RF Optimization Probes whose purpose is to be able to reduce hardware complexity and compensate for certain hardware imperfections of filters, mixers, local oscillators, etc.; and (c) Echo Profile ("EP") Probes whose purpose is to measure node delay spread on the network in order to optimize the preamble and Cyclic Prefix ("CP") requirements or other parameters.

[0060] For example, it is appreciated by those skilled in the art that the different channels typically utilize different transmit precoding such as bit-loading with OFDM modulation

schemes because the channels are physically and electrically different in the cable network. Physically the channels typically vary in length between nodes and electrically vary because of the paths through and reflections from the various cables, switches, terminals, connections and other electrical components in the cable network. A bit-loading scheme is described in U. S. Utility Application Serial No. 10/322,834 titled "Broadband Network for Coaxial Cable Using Multi-carrier Modulation," filed December 18, 2002, which is incorporated herein, in its entirety, by reference.

[0061] The channel frequency response is computed for all inter-node channels between all nodes in the BCN. A node newly introduced into the BCN must complete the channel estimation process with all other nodes before it can send or receive data. The payload of the bit-loading probe, also denoted as the EVM probe, is specified by a Packet Profile.

[0062] Another example is the IQ Imbalance Probe Packet that is used to determine the IQ imbalance in the transmitter's and receiver's analog and RF sections. Recalibration is performed periodically, as scheduled by the MAC/link layer control ("LLC") with a typical period in the minutes. The payload of the IQ Imbalance Probe Packet consists of a pseudo random sequence (which need not be known to the receiver) that is transmitted on two or more OFDM sub-carriers. The modulation, the index of the sub-carriers used and the length of the cyclic prefix and the probe are determined by the intended receiver of the probe and are indicated to the transmitter of the probe by the MAC in a Packet Profile.

[0063] In another example, the EP probe is used to determine the impulse response of the inter-node channel. The result determines the size of the cyclic prefix of the OFDM

waveform. The payload of the EP packet consists of *n* pseudo random time domain samples, generated by a pseudo random sequence. The payload is transmitted with a BPSK modulated single carrier at the center frequency of the channel. The length of the probe is provided by the MAC.

[0064] There are also three types of Robust Packets, used in multiple scenarios requiring highly robust acquisition and data transmission performance: (a) Beacon Packets, (b) Admission Packets, and (c) Robust Medium Access Plans ("MAPs"). The Beacon Packets are used by the NC to provide network timing and synchronization information. The synchronization information contained in the Beacon Packet includes pointers to the next Access Control Field ("ACF'), Asynchronous MAP, Isochronous MAP (if any), and the following Beacon packet. The Admission Packets are used when a node accesses the network the first time and include the initial contention mode packet and all the necessary information required by a new node.

[0065] The Robust MAPs are used whenever the NC determines that the BCN needs a very robust means to provide information to all the nodes in the BCN and is used on networks whose performance is marginal or when the NC decides that it is better to make the network more robust at the expense of throughput. This could include isochronous MAPs, which require robust but less frequent updates (since the isochronous MAPs establish network circuits, they are required to be more robust but are not very frequent). The Robust Packets may utilize the lowest available modulation in use (BPSK) and the data is transmitted redundantly on multiple sub-carriers according to a known format. Each robust OFDM symbol transfers 2 bytes of data (16 bits) only. The Robust Packets

use the bit to sub-carrier mapping shown in Table 2 shown in FIG. 7. Table 2 shows 16 bits, bit 0 through 15, and their sub-carrier locations. The sub-carrier locations in Table 2 are numbered from 0 to 255 and their actual locations in the OFDM are shown in FIG. 8. The repetitive nature of the bits contributes significantly to the robustness of the reception at the cost of efficiency. These packets, however, are used sparsely, so their reduced efficiency has minimal impact on network efficiency.

[0066] MPDU Packets may comprise MAP packets, Data packets, and Link Control packets. MAP Packets carry user MAC protocol data units. These packets can be unicast, multicast or broadcast as is defined in the MAP. The MPDU Packets are generally sent with optimized PHY parameters (both preamble and bit-loading). The optimized PHY parameters, determined by the LLC, depend on the destination node or nodes of the packet. The PHY layers of both the transmitter and the receiver obtain the PHY parameters and packet profile from their respective MAC layers.

[0067] FIG. 9 shows a block diagram showing the general structure of a Transmit Packet 900 used in an example implementation of a PHY Transmitter. In this example implementation, the packets transmitted by the PHY Transmitter may include three main fields: (a) a preamble field 902, (b) a channel estimation field 904, and (c) a data field 906. Certain packets, such as probes, may include subsets of these three fields.

[0068] FIG. 10 shows a flow block diagram showing the construction of a MAC Protocol Data Unit ("MPDU") packet 1000 by an example implementation of a PHY Transmitter. The packet construction includes three major steps: (a) MPDU construction, (b) Preamble

construction, and (c) Channel Estimate construction. These three segments form a packet for transmission to a node on the BCN.

[0069] In step 1002, the MPDU packet is provided by the MAC subsystem 502, FIG. 5, and already includes the various packet fields which are constructed by the MAC layer (not shown), including the packet header, timestamp, header CRC, payload and payload CRC structure. The MPDU data section contains an arbitrary number of bytes which are processed into the required number of OFDM symbols as described in greater detail below.

[0070] Next, in step 1004, the MPDU packet is first byte-padded with all '0' bytes, where the byte-padding takes into consideration both the Reed-Solomon (RS) encoding and its relation to an integral number of OFDM symbols. The PHY profile, provided by the MAC to the transmitter, defines among other things, the RS encoding parameters and the modulation and bit-loading profiles required to compute the required padding length. The modulator observes the MPDU length and computes the padding required in such a way that the total length of MPDU packet + padding + RS parity becomes an integral number of RS code words such that the last RS codeword is the largest among the possible last RS codeword defined below that can fit in the remainder bits of the OFDM symbols computed for the burst.

[0071] In step 1006, the packet is then encrypted using the Data Encryption Standard ("DES") algorithm (note that the padded packet size is an integral multiple of 8 bytes). The DES encryption is a system option to provide baseline privacy for all packets transmitted on the BCN. The MNCS may utilize a 56 bit DES encryption and may

require the user to enter a password in order to be able to communicate in an encrypted network. The password is basically used to derive keys and authenticate nodes. Once a node is authenticated, it is admitted with no further requirements. All nodes with the same password form one virtual private network and nodes with different passwords will form separate virtual private networks on the same channel. Baseline privacy may be implemented using both static and dynamic keys for encryption. The static keys are used for authentication and initial key distribution while the dynamic keys are used for subsequent key distribution and data traffic. Generation and distribution of dynamic keys are controlled by a node designated as the Privacy Master ("PM") that may also be the NC.

[0072] In step 1010, the encrypted MPDU packet 1008 is then encoded with RS Forward Error Correction ("FEC") encoding. The RS FEC encoding encodes the encrypted data according to the parameters provided in the Packet Profile. The encoding encodes K bytes of encrypted data at a time by computing 2*T parity bytes with the primitive polynomial $G(256) = X^8 + X^4 + X^3 + X^2 + 1$ and appending these parity bytes at the end of each RS frame to form N=K+2*T bytes codeword. The code is very flexible both in the selection of K (by shortening the code) and T. The most common coding parameters are K=192 and T=8. The last RS codeword is selected among the following: [K=128 T=6], [K=64 T=5], or [K=32 T=2]. Following the RS encoding, a final bit padding of all '0' is performed to ensure that the encoded MPDU fits into an integral numbers of bit-loaded, OFDM symbols.

[0073] The RS FEC encoded MPDU packet 1012 is then bit scrambled in step 1014 to further ensure a randomized bit stream prior to modulation. The randomization improves the spectral content of the transmission and reduces any data related DC biases. The RS FEC encoded MAC frame is randomized with a Pseudorandom Noise (PN23) sequence defined by the following references: a) "*Introduction to Spread Spectrum Communications,*" Roger L. Peterson, Rodger E. Zeimer and David E. Borth, Englewood Cliffs, NJ, Prentice Hall, 1995, and b) "*Error-correcting Codes,*" W. W. Peterson and E. J. Weldon, Cambridge. Mass, MIT Press, 1972, both of which are incorporated herein, in their entirety, by this reference. Then the resultant, randomized packet is padded to complete the final OFDM symbol with additional random bits as shown in step 1016. Finally in step 1018, a preamble is appended to the OFDM symbols to complete the packet construction.

[0074] FIG. 11 shows an example implementation of a randomizer that performs the bit scrambling. The bit scrambling is performed over the encoded and padded MPDU packet. The seed, which is the initial value loaded into the shift register in the figure, is sent to all the nodes in the network by the NC and is used for all packets within the corresponding network cycle. The seed for the MAP packet (which carries the seed information to all the network nodes) is known *a priori* by all the nodes in the network. The randomizer in the transmitter (and the receiver) is initialized with a seed at the beginning of each packet.

[0075] There is a second scrambling process that takes place following the carrier allocation process and just before the IFFT computation. This scrambling is called a "Byte Scrambling" and is described following the OFDM modulator section below.

[0076] The MPDU is now ready for modulation, which are basically OFDM sub-carrier mapping, Byte Scrambling, IFFT computation and Cyclic Prefix pre-pending. The sub-carrier numbering within the frequency band is shown in FIG. 8. The binary serial input data is mapped into the sub-carriers according to the bit-loading table provided by the Packet Profile and using 0 to 8 bits per sub-carrier with least-significant-bit first. The sub-carriers are being assigned sequentially starting with sub-carrier #0 to sub-carrier #255. Some of the sub-carriers may not be used due to the specific bit-loading table that may consider their respective frequencies to be of poor communications value. Similarly sub-carriers 128, 254, 255, 0, 1, 2, and 127 are typically not in use due to DC and channel edge considerations. Unused sub-carriers, defined by the bit-loading table, are still assigned a complex number of (0+j0), so every OFDM symbol is represented by 256 complex numbers.

[0077] The OFDM sub-carriers are modulated by using BPSK (2-QAM), QPSK (4-QAM), 8-QAM, 16-QAM, 32-QAM, 64-QAM, 128-QAM and 256-QAM constellations, depending on the bit-loading table provided to the modulator by the MAC sub-layer. Each sub-carrier data shall be converted into a complex number (I+jQ) representing the selected modulation constellation points. The conversion is performed according to the constellation mappings shown in Tables 3 through 10 shown in FIGs. 12, 13, 14, 15, 16, 17A and 17B. The binary number in the 'Input Bits' entry of the table is derived

sequentially from the post scrambling MPDU with the least significant bit ("*lsb*") of the Input Bits entry aligned with the least significant bit of the first byte of the MPDU. Subsequent 'Input Bits' entries are taken from the next unused bits in the MPDU with the Input Bits *lsb* the first unused bits in the MPDU sequence, where the MPDU sequence is serialized by its byte entries, *lsb* first.

[0078] The output values, d, are formed by multiplying the resulting (I+jQ) value in Tables 3-10 by a normalization factor K_{MOD}, as described in the equation below:

$$d = (I+jQ) \times K_{MOD}$$

The normalization factor, K_{MOD}, depends on the modulation mode, as prescribed in Table 11 shown in FIG. 18. It should be noted that the modulation type can be different for each sub-carrier when bit-loading is used. The purpose of the normalization factor is to achieve the same average power for all mappings. In other implementations, an approximate value of the normalization factor may be used.

[0079] In Tables 3 through 10 shown in FIGs. 12, 13, 14, 15, 16, 17A and 17B, the Input Bits and the corresponding I-out and Q-out out of the modulator are provided. The input bits are represented by an integer whose binary representations are equivalent to the input bits. The number of bits is determined by the number of entries in the table. For example, the 5th entry in Table 5, FIG. 12, is represented by the number 4 out of the 0-7 row entries. Therefore the number of input bits is 3 (represented by the numbers 0 to 7) and the input 100 (represented by the number 4) lead to I-out = 1 and Q-out = 1 for a (1+j1) modulator complex output.

[0080] Following the OFDM sub-carrier mapping, the modulated carriers are scrambled again by a PN15 sequence shown in Figure 19. Each of the constellation points for a modulated sub-carrier is inverted if the sequence bit is '0' and is not changed if the sequence bit is '1'. This is equivalent to inverting the sign of I and Q constellation for every '0' of the PN15 sequence. The resultant sequences are I and Q data of the modulated MPDU. The seed for the PN15 sequence is pre-determined for all the nodes in the network, but the Packet Profile can provide the disabling of the Byte Scrambling, as determined by the MAC.

[0081] There are no pilot sub-carriers, *i.e.*, all utilized sub-carriers carry data. The stream of complex numbers generated by the Sub-Carrier Mapping and Byte Scrambling are converted to time domain samples by computing an Inverse Fast Fourier Transform (IFFT) on the block of 256 complex numbers $X[n]=(I_n+jQ_n)$ at the output of the Sub-Carrier Mapping/Byte Scrambling process. The operation is mathematically defined for N point frequency domain symbol of $X[n]$ as follows:

$$x[k] = \frac{1}{N}\sum_{n=0}^{N-1} X[n]W_N^{-kn}, \qquad 0 \le k \le N-1$$

$$x[k] = 0, \qquad otherwise$$

$$W_N^{kn} = e^{-j2\pi kn/N}$$

with N=256 for the present implementation and n representing the sub-carrier number.

[0082] The cyclic prefix insertion is shown in Figure 20. For each OFDM symbol (IFFT output), the last CP samples are copied and pre-pended to form one OFDM symbol. The cyclic prefix length is dependent on the multi-path delay spread in the cable system and is determined by the NC.

[0083] The second major step in packet construction is Preamble construction. In an example implementation, the preamble may be constructed of three optional segments; the Short Training (ST) segment, the Long Training (LT) segment and the Fine Timing (FT) segment. Following the preamble, the packet includes the optional channel estimate segment, described below, with its Cyclic Prefix, denoted as AcqCP. The MNCS may utilize five preamble types consisting of different combinations of the ST, LT and FT segments. When a programmable option is shown, the PHY transmitter will use the option provided by the MAC in the transmit packet profile descriptor.

[0084] FIG. 21 shows the structure of the five preamble options in an example implementation using the three optional segments. The components' three optional segments may be described in terms of time samples with a typical sample rate of 50 MHz (or 20 nsec sample to sample times) for this example implementation.

[0085] The Short Training ("ST") section contains between 0 and 8 identical S segments, denoted S_1-S_k in FIG. 9. Each S segment contains 32 samples represented by complex numbers, normalized to a magnitude of 1, as follows:

S = √(1/2){1+j, -1-j, -1+j, -1+j, 1+j, 1-j, -1+j, -1+j, -1-j, -1+j, 1-j, -1-j, -1+j, -1-j, -1-j, -1+j, 1+j, -1-j, -1+j, -1+j, 1+j, 1-j, -1+j, -1+j, -1-j, -1+j, 1-j, -1-j, -1+j, -1-j, -1-j, -1+j }

The short training preamble section signal can be generated from the S samples by the following equation:

$$y_{SHORT}(t) = \sum_{i=0}^{i=k}[\sum_{m=0}^{31} S_i(m) * \delta(t - j * m)]$$

where $y_{SHORT}(t)$ is the resultant waveform, and $S_i(m)$ is the mth element of the ith S sequence.

[0086] The Long Training ("LT") section contains 0, 2, 4, 6 or 8 T segments denoted T_1–T_n in FIG. 9. Each T segment contains 64 samples represented by the following complex numbers:

T = √(1/2) {1+j, 1+j, 1+j, -1+j, -1+j, -1+j, 1-j, -1+j, 1-j, 1+j, 1-j, 1+j, -1+j, -1-j, 1-j, -1+j, 1+j, -1-j, -1+j, -1+j, 1+j, 1-j, -1+j, -1+j, -1-j, -1+j, 1-j, -1-j, -1+j, -1-j, -1-j, -1+j, 1+j, 1+j, 1+j, -1+j, -1+j, -1+j, 1-j, -1+j, 1-j, 1+j, 1-j, 1+j, -1+j, -1-j, 1-j, -1+j, 1+j, -1-j, -1+j, -1+j, 1+j, 1-j, -1+j, -1+j, -1-j, -1+j, 1-j, -1-j, -1+j, -1-j, -1-j, -1+j}

The LT preamble section signal can be generated from the T samples according to the following equation:

$$y_{LONG}(t) = \sum_{j=0}^{j=n/2}[\sum_{m=0}^{63} T_j(m) * \delta(t - j * m)] - \sum_{j=n/2+1}^{n}[\sum_{m=0}^{63} T_j(m) * \delta(t - j * m)]$$

where $y_{LONG}(t)$ is the resultant waveform and $T_j(m)$ is the mth element of the jth T sequence.

[0087] A Fine Timing ("FT") section contains two segments of various combinations in different packets, as shown in FIG. 9. The sequence F is the concatenation of two segments as follows:

$$\mathbf{F} = [\mathbf{F_a}, \mathbf{F_b}]$$

where F_a and F_b are each 64 samples long. In certain cases, such as for data MPDU, the sequence **F** is:

$$\mathbf{F} = \mathbf{F_b}$$

In such cases, the Fine Timing is only 64 samples long (as in the case of Preamble type V in FIG. 21).

F_a=√(1/2 {1+j, -1-j, -1+j, -1+j, 1+j, 1-j, -1+j, -1+j, -1-j, -1+j, 1-j, -1-j, -1+j, -1-j, -1-j, -1+j, 1+j, -1-j, -1+j, -1+j, 1+j, 1-j, -1+j, -1+j, -1-j, -1+j, 1-j, -1-j, -1+j, -1-j, -1-j, -1+j , 0, 0, 0, 0, 0, 0, 0, 0, 0, 0, 0, 0, 0, 0, 0, 0, 0, 0, 0, 0, 0, 0, 0, 0, 0, 0, 0, 0, 0, 0, 0, 0, 0, 0, 0}

F_b is one of the 4 sequences A, B, C or D as follows:

A= √(1/2 {+1+j, -1-j, -1-j, -1-j, -1-j, -1-j, +1+j, +1+j, -1-j, +1+j, +1+j, +1+j, -1-j, -1-j, +1+j, +1+j, -1-j, -1-j, -1-j, +1+j, +1+j, +1+j, -1-j, +1+j, -1-j, +1+j, +1+j, +1+j, +1+j, +1+j, +1+j, -1-j, 1-j, +1+j, +1+j, -1-j, +1+j, -1-j, -1-j, -1-j, +1+j, -1-j, -1-j, -1-j, -1-j, +1+j, -1-j, +1+j, +1+j, -1-j, -1-j, +1+j, -1-j, +1+j, -1-j, +1+j, -1-j, -1-j, +1+j, -1-j, -1-j, +1+j, +1+j, +1+j}

B= √(1/2 {+1+j, -1-j, +1+j, +1+j, -1-j, -1-j, -1-j, +1+j, -1-j, -1-j, +1+j, -1-j, -1-j, -1-j, -1-j, +1+j, +1+j, +1+j, -1-j, -1-j, -1-j, -1-j, -1-j, +1+j, -1-j, +1+j, +1+j, +1+j, +1+j, +1+j, +1+j, -1-j, -1-j, -1-j, +1+j, -1-j, +1+j, -1-j, +1+j, -1-j, -1-j, -1-j, +1+j, +1+j, -1-j, -1-j, +1+j, +1+j, +1+j, +1+j, -1-j, +1+j, +1+j, +1+j, -1-j, +1+j, -1-j, +1+j, +1+j, -1-j, +1+j, -1-j, -1-j, +1+j}

C= √(1/2 {+1+j, +1+j, -1-j, +1+j, +1+j, +1+j, -1-j, +1+j, +1+j, -1-j, +1+j, -1-j, -1-j, +1+j, -1-j, -1-j, +1+j, +1+j, +1+j, -1-j, -1-j, -1-j, +1+j, -1-j, +1+j, +1+j, +1+j, +1+j, -1-j, -1-j, +1+j, -1-j, -1-j, +1+j, -1-j, -1-j, -1-j, +1+j, +1+j, -1-j, -1-j, -1-j, -1-j, +1+j, -1-j, -1-j, -1-j, -1-j, -1-j, +1+j, +1+j, +1+j, +1+j, +1+j, +1+j, -1-j, +1+j, -1-j, +1+j, -1-j, +1+j, +1+j, -1-j, -1-j}

D=√(1/2 {-1-j, +1+j, +1+j, +1+j, -1-j, +1+j, +1+j, -1-j, +1+j, -1-j, -1-j, +1+j, -1-j, -1-j, +1+j, +1+j, +1+j, -1-j, -1-j, -1-j, +1+j, -1-j, +1+j, +1+j, +1+j, +1+j, -1-j, -1-j, +1+j, -1-j, +1+j, -1-j, -1-j, -1-j, -1-j, +1+j, +1+j, -1-j, -1-j, -1-j, -1-j, +1+j, -1-j, -1-j, -1-j, -1-j, -1-j, +1+j, +1+j, +1+j, +1+j, +1+j, +1+j, -1-j, +1+j, -1-j, +1+j, -1-j, +1+j, +1+j, -1-j, -1-j, +1+j, +1+j}

[0088] The FT symbol is generated according to the following equation:

$$y_{FINE}(t) = \sum_{m=1}^{128} F\ (m) * \delta(t - j * m)$$

When 64 samples are being used, as in preamble type V in Figure 21, only the last 64 samples of the F sequence are being used.

[0089] The third major step in packet construction is Channel Estimation ("CE") construction (see FIGs. 9 and 22). The Channel Estimate section consists of a variable length (0-256 samples) cyclic prefix, denoted as AcqCP, followed by 0 to 8 OFDM symbols. The AcqCP is a cyclic prefix of the first symbol only and is used if there is at least one OFDM symbol. If there is more than one OFDM symbol in the CE, any

additional OFDM symbols in the CE do not have a cyclic prefix. The Channel Estimate OFDM symbols consist of 256 sub-carriers, where the DC sub-carrier is removed. The sub-carriers are modulated according to the L sequence below:

L(–128, 128) = {1, 1, –1, –1, 1, 1, –1, 1, –1, 1, 1, 1, 1, 1, 1, –1, –1, 1, 1, –1, 1, –1, 1, 1, 1, 1,... 0(DC),....1, –1, –1, 1, 1, –1, 1, –1, 1, –1, –1, –1, –1, –1, 1, 1, –1, –1, 1, –1, 1, –1, 1, 1, 1, 1}

[0090] FIG. 22 shows an example of a specific implementation of a communications system utilizing a PHY transmitter, in the form of a table summarizing the various PHY packet types that may be implemented, together with some of their more important example parameters.

[0091] For each packet, the modulator section of the Modem Subsystem 504, FIG. 5, prepends the selected preamble according to the control information and performs filtering and DAC compensation signal processing before sending the information to the dual Digital to Analog converters for conversion to analog baseband signals to be baseband transmitted or passed to the RF sub-system for upconversion and RF transmission. Due to the zero-order hold effect of the Digital to Analog conversion ("DAC"), the DAC process may introduce a distortion to the signal spectrum. The frequency response of the zero-hold DAC is as shown in Figure 23. Due to this well known response, the system can pre-distort the signal in the digital domain in order to compensate for the DAC effects. Since the system may operate in baseband mode or in RF mode, 2 sets of compensation coefficients are required.

[0092] Prior to up-conversion by the RF Subsystem 506, FIG. 5, I and Q signals may be corrected to compensate for the transmitter I and Q imbalance. Direct conversion implementations of the RF transmit chain may cause impairments that manifest themselves as a difference between I branch and the Q branch. The link control layer, as part of the admission process, initiates the IQ imbalance probes. The results are used by the node to correct (*i.e.*, pre-distort) its imbalance. The I and Q imbalance manifests itself in the time domain as gain, phase and delay difference between the I arm and the Q arm of the RF portion of the transmitter and receiver. In the frequency domain, the gain and phase imbalances manifest themselves as a negative frequency image, *i.e.*, any information transmitted on a certain frequency shows up attenuated on the image. The delay imbalance manifests itself as a negative frequency image the value of which depends on the frequency. A possible algorithm describing the receive and transmit imbalance may output three values for the transmitter and three for the receiver.

[0093] The complex I and Q OFDM signals are up-converted to form a real signal at the desired center frequency. The output filter is responsible to match the RF signal to the cable impedance and to the specified spectral mask around the central frequency.

[0094] In certain applications, the frequencies below 50 MHz may be made available for use by the communications system. In these applications, the system will not require the use of up-conversion to RF frequencies and can output the signal directly out of the DAC and output filter (with a potential addition of amplifications and additional filtering). This method of operation is called a "low IF" operation and is shown in Figure 24. Consecutive samples from the output of the system prior to the DAC interface are rotated

by an amount to provide digital up-conversion to low IF frequency. This value is loaded into the appropriate register by the system software. The rotation is accomplished using a direct digital rotation or by the use of the Cordic algorithm. When operating in the low IF, the DAC compensation coefficient has to be re-adjusted to match the frequency response of the sample-hold effect on the DAC.

[0095] The processes shown in FIGs. 10, 11, 19, 20, 23 and 24 may be performed by hardware or software. If the process is performed by software, the software may reside in software memory (not shown) in the BCN. The software in software memory may include an ordered listing of executable instructions for implementing logical functions (*i.e.*, "logic" that may be implemented either in digital form such as digital circuitry or source code or in analog form such as analog circuitry or an analog source such as an analog electrical, sound or video signal), may selectively be embodied in any computer-readable (or signal-bearing) medium for use by or in connection with an instruction execution system, apparatus, or device, such as a computer-based system, processor-containing system, or other system that may selectively fetch the instructions from the instruction execution system, apparatus, or device and execute the instructions. In the context of this document, a "computer-readable medium" and/or "signal-bearing medium" is any means that may contain, store, communicate, propagate, or transport the program for use by or in connection with the instruction execution system, apparatus, or device. The computer readable medium may selectively be, for example but not limited to, an electronic, magnetic, optical, electromagnetic, infrared, or semiconductor system, apparatus, device, or propagation medium. More specific examples, that is "a non-

exhaustive list" of the computer-readable media, would include the following: an electrical connection (electronic) having one or more wires, a portable computer diskette (magnetic), a RAM (electronic), a read-only memory "ROM" (electronic), an erasable programmable read-only memory (EPROM or Flash memory) (electronic), an optical fiber (optical), and a portable compact disc read-only memory "CDROM" (optical). Note that the computer-readable medium may even be paper or another suitable medium upon which the program is printed, as the program can be electronically captured, via for instance, optical scanning of the paper or other medium, then compiled, interpreted or otherwise processed in a suitable manner if necessary, and then stored in a computer memory.

[0096] While various embodiments of the invention have been described, it will be apparent to those of ordinary skill in the art that many more embodiments and implementations are possible that are within the scope of this invention.

CLAIMS

What is claimed is:

1. A modem for communication to at least one node across a building coaxial network, the modem comprising:

a transmitter; and

a pre-coder in signal communication with the transmitter,

wherein the pre-coder utilizes adaptive communication techniques to communicate to the at least one node, and

wherein the transmitter communicates with at least one node utilizing packet communications using Time Division Multiple Access ("TDMA").

2. The modem of claim 1, wherein the transmitter is a baseband transmitter.

3. The modem of claim 1, wherein the transmitter is a Radio Frequency ("RF") transmitter.

4. The modem of claim 1, wherein the packet communication utilizes services.

5. The modem of claim 1, wherein the transmitter communicates with at least one node utilizing packet communications using Time Division Duplex ("TDD").

6. The modem of claim 5, wherein the packet communication utilizes formatting that includes

a preamble; and

a packet of data.

7. The modem of claim 6, wherein the packet communications includes multiple packets types chosen from the group consisting of:

probe packet;

robust packet; and

data packet.

8. The modem of claim 7, wherein the packet types include packet properties and wherein the transmitter is capable of changing the packet properties of the packet types on a packet-by-packet basis.

9. The modem of claim 6, wherein the formatting includes packet encryption.

10. The modem of claim 6, wherein the scrambling formatting includes Reed Solomon ("RS") encoding.

11. The modem of claim 10, wherein the packet is padded to include an integral number of similar size and coding type RS codewords.

12. The modem of claim 6, wherein the formatting utilizes packet encryption.

13. The modem of claim 13, wherein the encryption utilizes Date Encryption Standard ("DES").

14. The modem of claim 1, wherein the transmitter utilizes orthogonal frequency division multiplexing ("OFDM") modulation.

15. The modem of claim 14, wherein the transmitter utilizes padding to utilize an integral number of OFDM symbols.

16. The modem of claim 1, wherein the pre-coder utilizes orthogonal frequency division multiplexing ("OFDM") bit-loading.

17. The modem of claim 16, wherein the formatting utilizes scrambling.

18. The modem of claim 17, wherein the scrambling is byte scrambling.

19. The modem of claim 18, wherein the scrambling is OFDM bin scrambling.

20. The modem of claim 14 wherein the transmitter utilizes a modulation type on each of its subcarriers chosen from the group consisting of:

bipolar phase shift keying ("BPSK");

quadrature phase shift keying ("QPSK");

8 quadrature amplitude modulation ("QAM");

16 QAM;

32 QAM;

64 QAM;

128 QAM; and

256 QAM.

21. The modem of claim 20, wherein the modulation type is obtained from a translation table that maps data to waveform data.

22. The modem of claim 21, wherein an amplitude factor is applied to the various modulation types.

23. The modem of claim 1, wherein the transmitter is capable of producing and transmitting a probe signal to the at least one node.

24. The modem of claim 1, wherein the transmitter is capable of producing a robust signal that includes redundant, repetitious subcarriers.

25. The modem of claim 24, wherein the transmitter transmits robust repetitious subcarriers according to a predetermined format.

26. A method for communication to at least one node across a building coaxial network, the method comprising:

utilizing adaptive communication techniques to produce communication data; and

transmitting the communication data to communicate to the at least one node, wherein transmitting utilizes Time Division Multiple Access ("TDMA").

27. The method of claim 26, wherein transmitting includes utilizing burst communication to transmit the communication data to communicate to the at least one node.

28. The method of claim 27, wherein utilizing burst communication includes utilizing packet communication to communicate to the at least one node.

29. The method of claim 27, wherein the packet communication utilizes formatting information.

30. The method of claim 29, wherein the formatting information includes sub-packet information selected from the group consisting of:

a preamble; and

a packet of data.

31. The method of claim 30,

wherein the preamble includes preamble data, and

wherein the transmitter is capable of changing the properties of the preamble data on a packet-by-packet basis.

32. The method of claim 29, wherein the formatting information utilizes scrambling.

33. The method of claim 32, wherein the scrambling is byte scrambling.

34. The method of claim 30, wherein the scrambling is bin scrambling.

35. The method of claim 32, wherein the formatting information utilizes packet encryption.

36. The method of claim 35, wherein the encryption utilizes Date Encryption Standard ("DES").

37. The method of claim 26, wherein the transmitting includes transmitting utilizing multiple frequencies.

38. The method of claim 37, wherein transmitting utilizing multiple frequencies utilizes multi-carrier modulation.

39. The method of claim 26, wherein transmitting includes transmitting utilizing time division duplexing ("TDD").

40. The method of claim 39, wherein the adaptive communication techniques utilizes orthogonal frequency division multiplexing ("OFDM") with bit-loading.

41. The method of claim 40, wherein the formatting information utilizes scrambling.

42. The method of claim 41, wherein the scrambling is byte scrambling.

43. The method of claim 41, wherein the scrambling is bin scrambling.

44. The method of claim 26, further including transmitting a probe signal to the at least one node.

45. A physical layer transmitter capable of transmitting packets to a plurality of nodes in a broadband cable network ("BCN"), the transmitter comprising:

a Media Access Controller ("MAC") subsystem capable of providing data and control packets for transmission within the BCN;

a modem subsystem in signal communication with the MAC subsystem, the Modem subsystem capable of receiving the data and control packets from the MAC subsystem and appending control information to the data and control packets; and

a Radio Frequency ("RF") subsystem in signal communication with the modem subsystem, capable of receiving the data and control packets from the modem subsystem and upconverting the data and control packets received from the modem subsystem.

ABSTRACT

A physical layer transmitter that communicates between nodes in a broadband cable network by transmitting and receiving packets containing data and control information. Packets are constructed by the physical layer transmitter and transmitted to one or more receiving nodes that are capable of processing the packets. Packets are directed to specific nodes utilizing link layer control data. The packets may also contain control information that may include formatting, encoding and modulation parameters that are capable of being processed by the appropriate receiving nodes. The physical layer transmitter allows node-to-node communication within a broadband cable network and each node in the network is capable of communicating with every other node in the network.

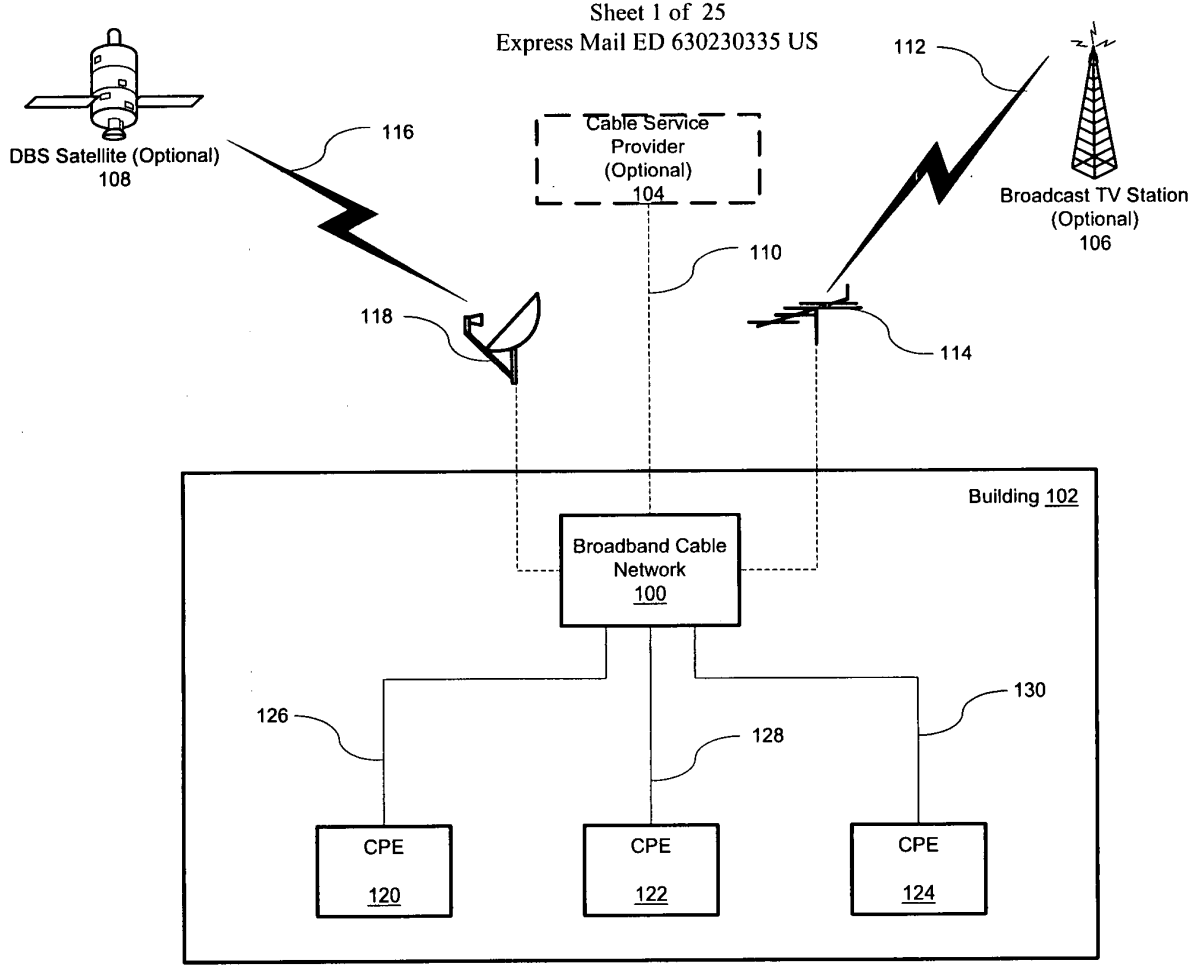

FIG. 1 (Prior Art)

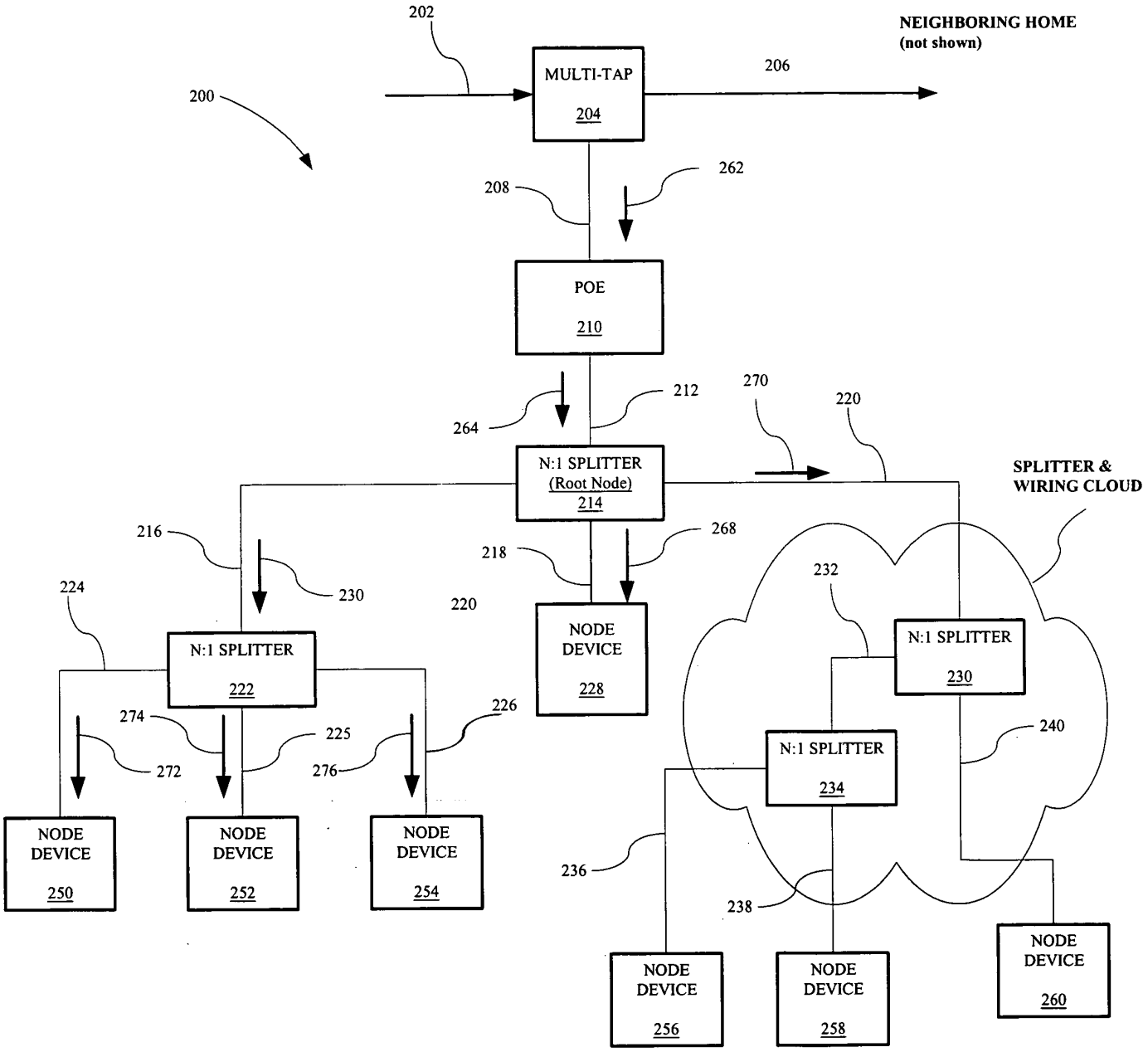

FIG. 2 (Prior Art)

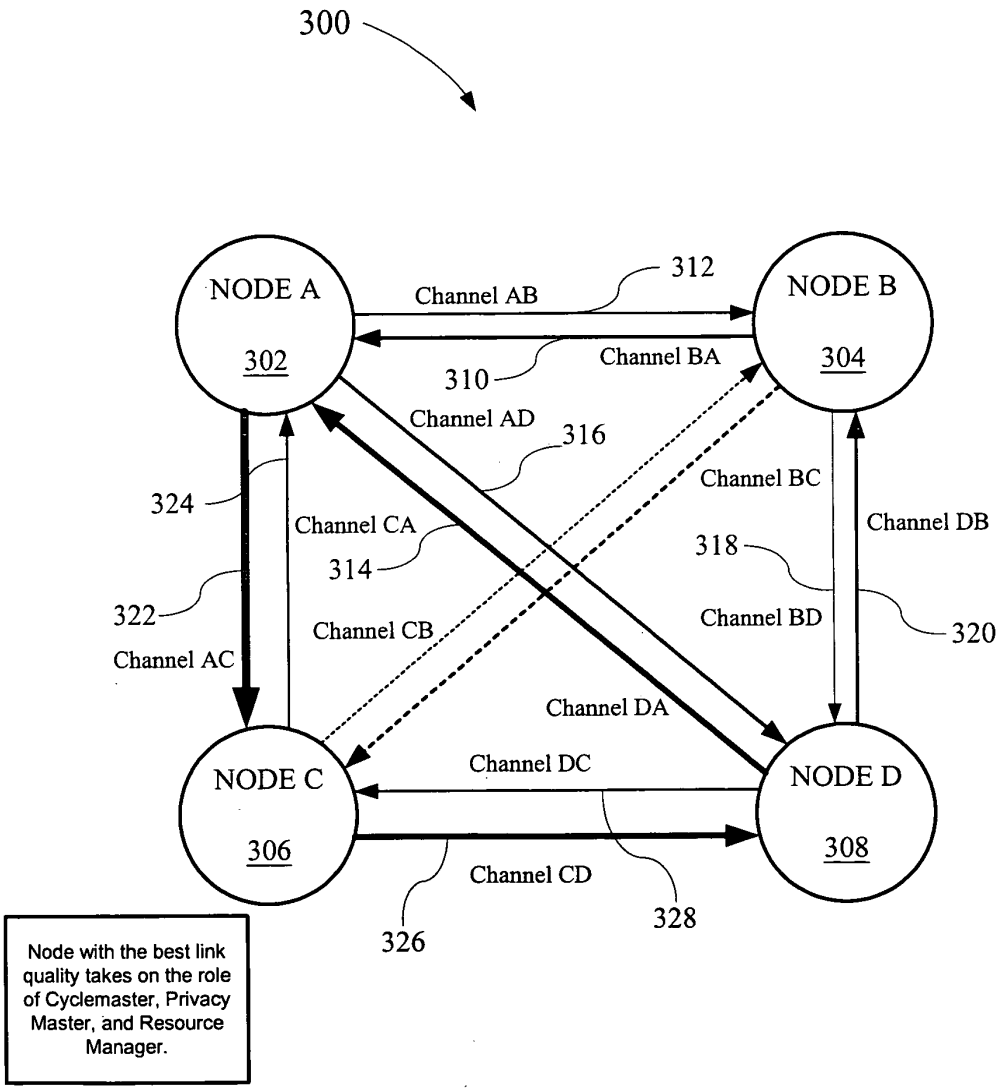
300
NODE A
302
NODE B
304
NODE C
306
NODE D
308
Channel AB
312
Channel BA
310
Channel AD
316
Channel BC
Channel DB
318
320
Channel BD
324
Channel CA
314
322
Channel AC
Channel CB
Channel DA
Channel DC
Channel CD
326
328
Node with the best link quality takes on the role of Cyclemaster, Privacy Master, and Resource Manager.

FIG. 3

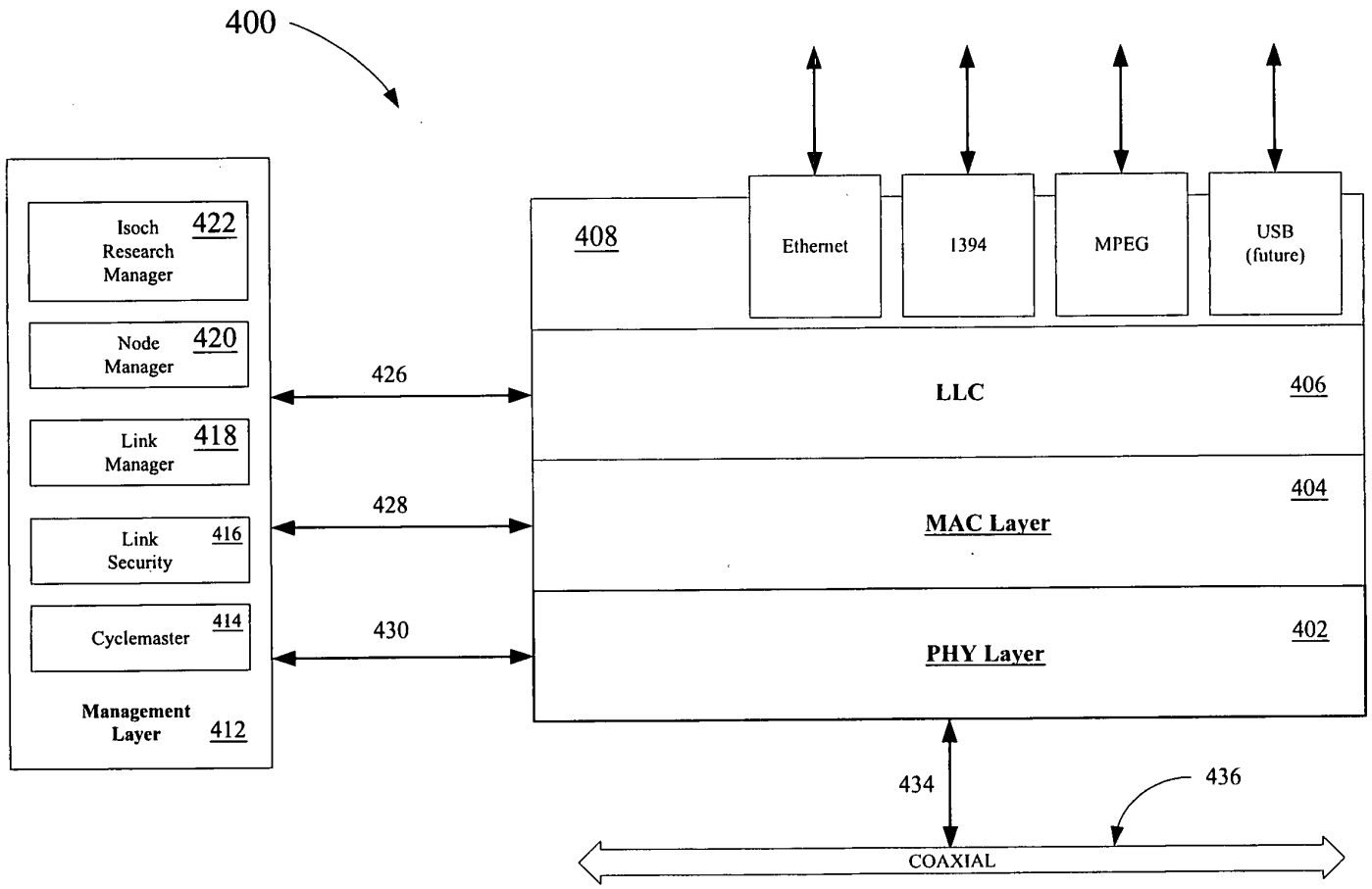
400
Isoch Research Manager
422
Node Manager
420
Link Manager
418
Link Security
416
Cyclemaster
414
Management Layer
412
426
428
430
408
Ethernet
1394
MPEG
USB (future)
LLC
406
MAC Layer
404
PHY Layer
402
434
436
COAXIAL

FIG. 4

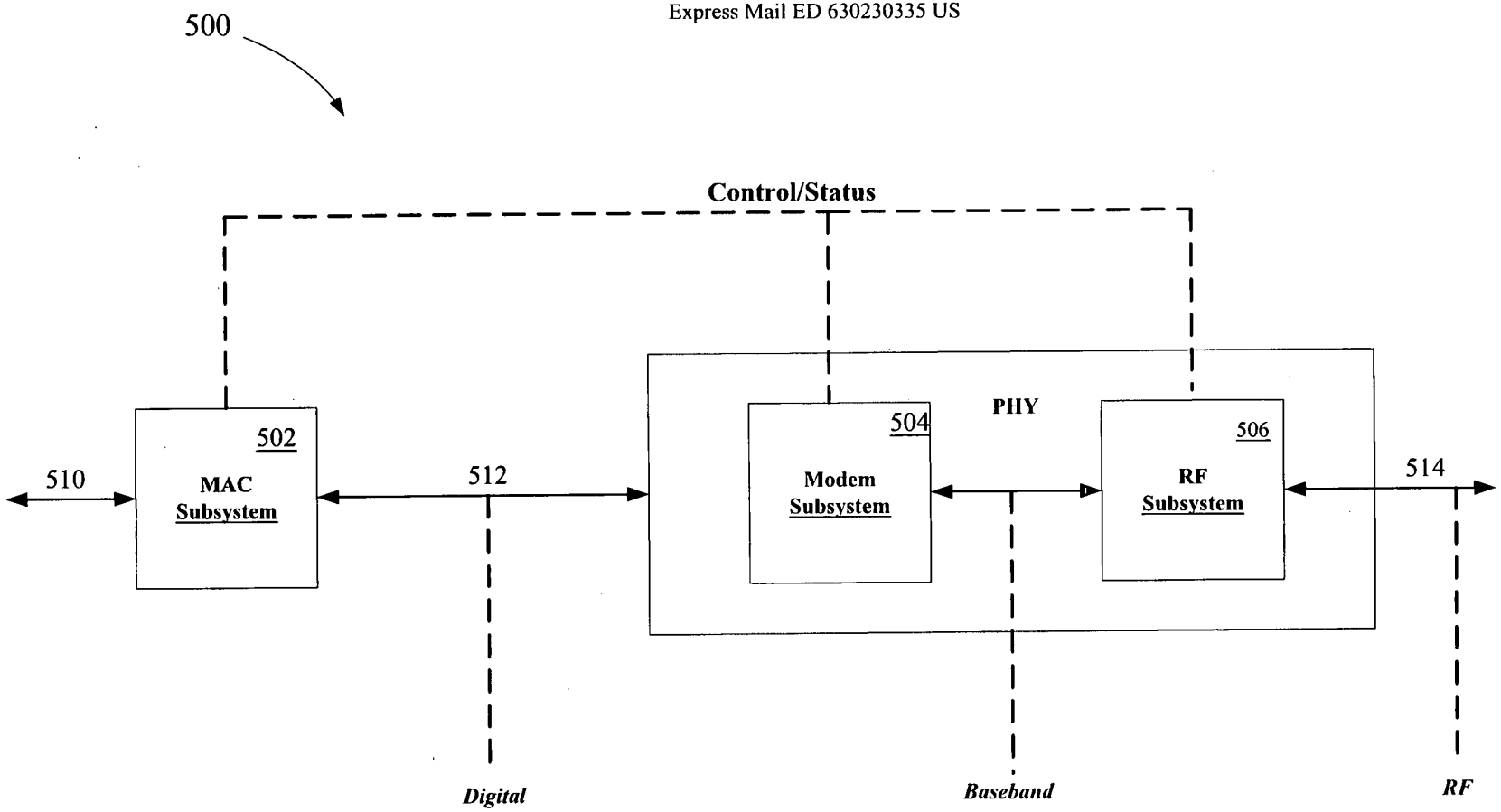
500
Control/Status
502
MAC
Subsystem
510
512
PHY
504
Modem
Subsystem
506
RF
Subsystem
514
Digital
Baseband
RF

FIG. 5

PHY Packet Type	Properties	Application
Probe	BPSK, no FEC	Error Vector Measurement (EVM) IQ Imbalance correction Echo Profile (EPP)
Robust	BPSK, redundant sub-carriers	Robust MAP Beacon Packets Contention and admission Packets
MAC Protocol Data Unit (MPDU)	Optimal modulation (bit-loaded)	MAP Packets Data Packets Link Control Packets

Table 1 Three Packet Types Supported by the PHY Layer

FIG. 6

SC#	bit #	SC#	bit #	SC#	bit #	SC#	bit #	SC#	bit #	SC#	bit #	SC#	bit #	SC#	bit #
128	0	160	13	192	6	224	11	0	12	32	9	64	2	96	7
129	1	161	14	193	7	225	12	1	13	33	10	65	3	97	8
130	2	162	15	194	8	226	13	2	14	34	11	66	4	98	9
131	3	163	0	195	9	227	14	3	15	35	12	67	5	99	10
132	4	164	1	196	10	228	15	4	0	36	13	68	6	100	11
133	5	165	2	197	11	229	0	5	1	37	14	69	7	101	12
134	6	166	3	198	12	230	1	6	2	38	15	70	8	102	13
135	7	167	4	199	13	231	2	7	3	39	0	71	9	103	14
136	8	168	5	200	14	232	3	8	4	40	1	72	10	104	15
137	9	169	6	201	15	233	4	9	5	41	2	73	11	105	0
138	10	170	7	202	0	234	5	10	6	42	3	74	12	106	1
139	11	171	8	203	1	235	6	11	7	43	4	75	13	107	2
140	12	172	9	204	2	236	7	12	8	44	5	76	14	108	3
141	13	173	10	205	3	237	8	13	9	45	6	77	15	109	4
142	14	174	11	206	4	238	9	14	10	46	7	78	0	110	5
143	15	175	12	207	5	239	10	15	11	47	8	79	1	111	6
144	15	176	10	208	1	240	4	16	3	48	14	80	5	112	8
145	0	177	11	209	2	241	5	17	4	49	15	81	6	113	9
146	1	178	12	210	3	242	6	18	5	50	0	82	7	114	10
147	2	179	13	211	4	243	7	19	6	51	1	83	8	115	11
148	3	180	14	212	5	244	8	20	7	52	2	84	9	116	12
149	4	181	15	213	6	245	9	21	8	53	3	85	10	117	13
150	5	182	0	214	7	246	10	22	9	54	4	86	11	118	14
151	6	183	1	215	8	247	11	23	10	55	5	87	12	119	15
152	7	184	2	216	9	248	12	24	11	56	6	88	13	120	0
153	8	185	3	217	10	249	13	25	12	57	7	89	14	121	1
154	9	186	4	218	11	250	14	26	13	58	8	90	15	122	2
155	10	187	5	219	12	251	15	27	14	59	9	91	0	123	3
156	11	188	6	220	13	252	0	28	15	60	10	92	1	124	4
157	12	189	7	221	14	253	1	29	0	61	11	93	2	125	5
158	13	190	8	222	15	254	2	30	1	62	12	94	3	126	6
159	14	191	9	223	0	255	3	31	2	63	13	95	4	127	7

Table 2 Robust sub-carrier mapping

FIG. 7

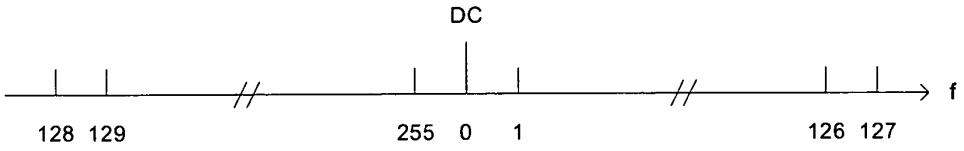

Figure 8 Sub-Carrier Numbering

FIG. 8

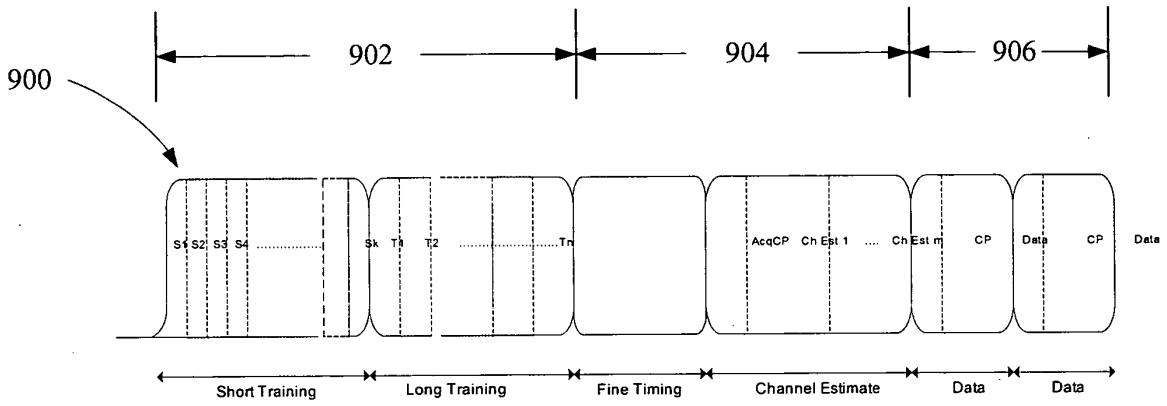
900
902
904
906
S1 S2 S3 S4
Sk
T1 T2
Tn
AcqCP
Ch Est 1
Ch Est m
CP
Data
CP
Data
Short Training
Long Training
Fine Timing
Channel Estimate
Data
Data

FIG. 9

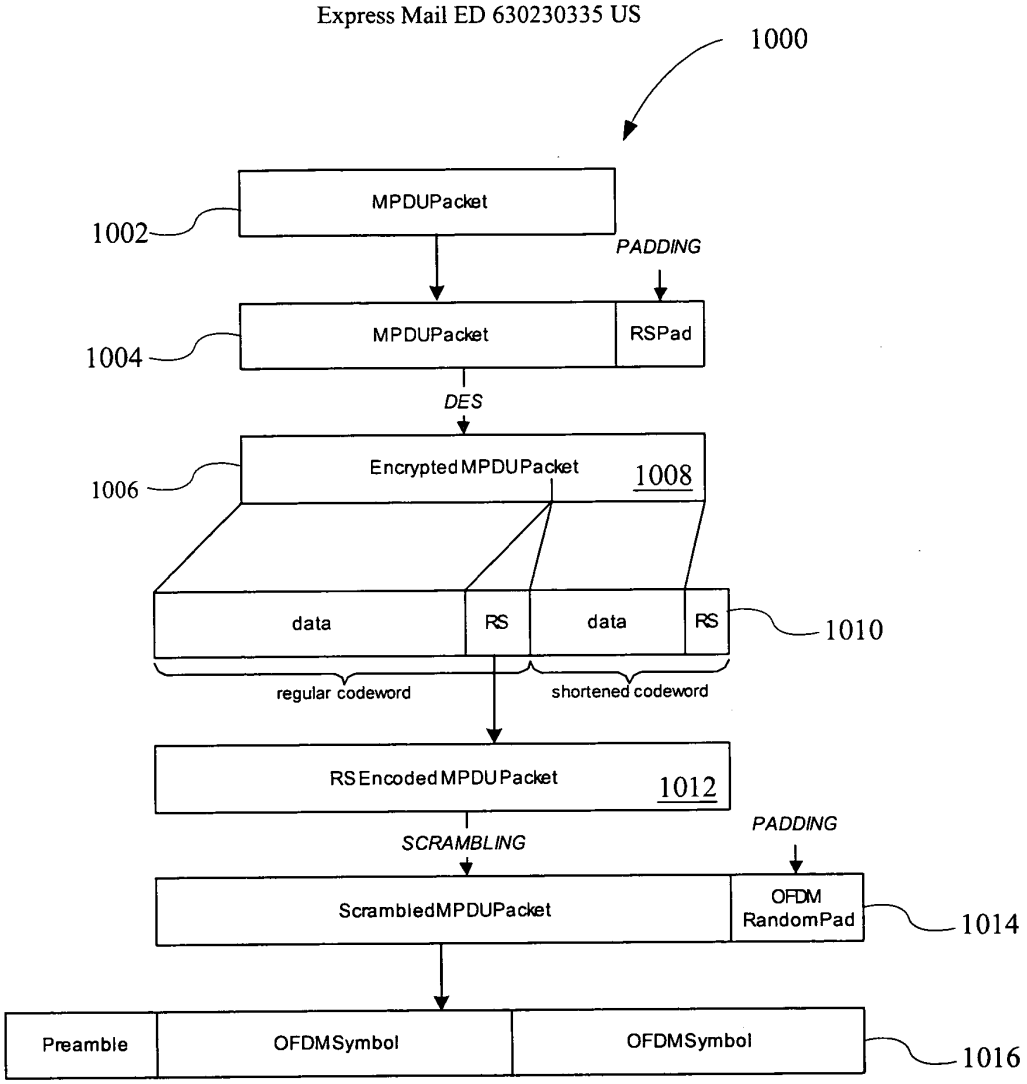
1000
MPDUPacket
1002
PADDING
MPDUPacket
RSPad
1004
DES
Encrypted MPDU Packet
1008
1006
data
RS
data
RS
1010
regular codeword
shortened codeword
RS Encoded MPDU Packet
1012
SCRAMBLING
PADDING
Scrambled MPDU Packet
OFDM
Random Pad
1014
Preamble
OFDM Symbol
OFDM Symbol
1016

FIG. 10

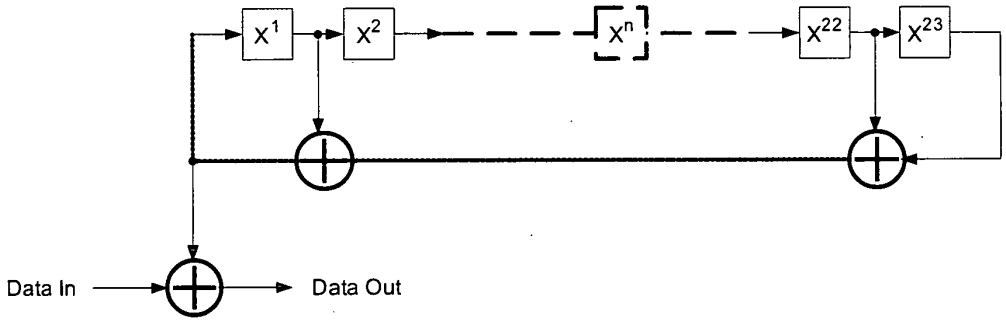

Data Scrambler with PN23

FIG. 11

Input bits	I-out	Q-out
0	1	0
1	-1	0

Table 3 BPSK Encoding Table

Input bits	I-out	Q-out
0	1	1
1	-1	1
2	1	-1
3	-1	-1

Table 4 QPSK Encoding Table

Input bits	I-out	Q-out
0	-1	-1
1	1	-3
2	-3	1
3	-3	-3
4	1	1
5	3	-1
6	-1	3
7	3	3

Table 5 8-QAM Encoding Table

FIG. 12

Input bits	I-out	Q-out
0	1	1
1	3	1
2	1	3
3	3	3
4	-1	1
5	-3	1
6	-1	3
7	-3	3
8	1	-1
9	3	-1
10	1	-3
11	3	-3
12	-1	-1
13	-3	-1
14	-1	-3
15	-3	-3

Table 6 16-QAM Encoding Table

FIG. 13

Input bits	I-out	Q-out	Input bits	I-out	Q-out
0	1	1	16	1	-1
1	3	1	17	3	-1
2	3	5	18	3	-5
3	5	1	19	5	-1
4	1	3	20	1	-3
5	3	3	21	3	-3
6	1	5	22	1	-5
7	5	3	23	5	-3
8	-1	1	24	-1	-1
9	-3	1	25	-3	-1
10	-3	5	26	-3	-5
11	-5	1	27	-5	-1
12	-1	3	28	-1	-3
13	-3	3	29	-3	-3
14	-1	5	30	-1	-5
15	-5	3	31	-5	-3

Table 7 32-QAM Encoding Table

FIG. 14

Input bits	I-Out	Q-out	Input bits	I-Out	Q-Out
0	1	1	32	1	-1
1	3	1	33	3	-1
2	7	1	34	7	-1
3	5	1	35	5	-1
4	1	3	36	1	-3
5	3	3	37	3	-3
6	7	3	38	7	-3
7	5	3	39	5	-3
8	1	7	40	1	-7
9	3	7	41	3	-7
10	7	7	42	7	-7
11	5	7	43	5	-7
12	1	5	44	1	-5
13	3	5	45	3	-5
14	7	5	46	7	-5
15	5	5	47	5	-5
16	-1	1	48	-1	-1
17	-3	1	49	-3	-1
18	-7	1	50	-7	-1
19	-5	1	51	-5	-1
20	-1	3	52	-1	-3
21	-3	3	53	-3	-3
22	-7	3	54	-7	-3
23	-5	3	55	-5	-3
24	-1	7	56	-1	-7
25	-3	7	57	-3	-7
26	-7	7	58	-7	-7
27	-5	7	59	-5	-7
28	-1	5	60	-1	-5
29	-3	5	61	-3	-5
30	-7	5	62	-7	-5
31	-5	5	63	-5	-5

Table 8 64-QAM Encoding Table

FIG. 15

Input	I	Q	Input	I	Q	Input	I	Q	Input	I	Q
0	1	1	32	-1	1	64	1	-1	96	-1	-1
1	3	1	33	-3	1	65	3	-1	97	-3	-1
2	7	1	34	-7	1	66	7	-1	98	-7	-1
3	5	1	35	-5	1	67	5	-1	99	-5	-1
4	7	9	36	-7	9	68	7	-9	100	-7	-9
5	5	9	37	-5	9	69	5	-9	101	-5	-9
6	9	1	38	-9	1	70	9	-1	102	-9	-1
7	11	1	39	-11	1	71	11	-1	103	-11	-1
8	1	3	40	-1	3	72	1	-3	104	-1	-3
9	3	3	41	-3	3	73	3	-3	105	-3	-3
10	7	3	42	-7	3	74	7	-3	106	-7	-3
11	5	3	43	-5	3	75	5	-3	107	-5	-3
12	7	11	44	-7	11	76	7	-11	108	-7	-11
13	5	11	45	-5	11	77	5	-11	109	-5	-11
14	9	3	46	-9	3	78	9	-3	110	-9	-3
15	11	3	47	-11	3	79	11	-3	111	-11	-3
16	1	7	48	-1	7	80	1	-7	112	-1	-7
17	3	7	49	-3	7	81	3	-7	113	-3	-7
18	7	7	50	-7	7	82	7	-7	114	-7	-7
19	5	7	51	-5	7	83	5	-7	115	-5	-7
20	1	9	52	-1	9	84	1	-9	116	-1	-9
21	3	9	53	-3	9	85	3	-9	117	-3	-9
22	9	7	54	-9	7	86	9	-7	118	-9	-7
23	11	7	55	-11	7	87	11	-7	119	-11	-7
24	1	5	56	-1	5	88	1	-5	120	-1	-5
25	3	5	57	-3	5	89	3	-5	121	-3	-5
26	7	5	58	-7	5	90	7	-5	122	-7	-5
27	5	5	59	-5	5	91	5	-5	123	-5	-5
28	1	11	60	-1	11	92	1	-11	124	-1	-11
29	3	11	61	-3	11	93	3	-11	125	-3	-11
30	9	5	62	-9	5	94	9	-5	126	-9	-5
31	11	5	63	-11	5	95	11	-5	127	-11	-5

Table 9 128-QAM Encoding Table

FIG. 16

Input	I	Q	Input	I	Q	Input	I	Q	Input	I	Q
0	1	1	64	-1	1	128	1	-1	192	-1	-1
1	3	1	65	-3	1	129	3	-1	193	-3	-1
2	7	1	66	-7	1	130	7	-1	194	-7	-1
3	5	1	67	-5	1	131	5	-1	195	-5	-1
4	15	1	68	-15	1	132	15	-1	196	-15	-1
5	13	1	69	-13	1	133	13	-1	197	-13	-1
6	9	1	70	-9	1	134	9	-1	198	-9	-1
7	11	1	71	-11	1	135	11	-1	199	-11	-1
8	1	3	72	-1	3	136	1	-3	200	-1	-3
9	3	3	73	-3	3	137	3	-3	201	-3	-3
10	7	3	74	-7	3	138	7	-3	202	-7	-3
11	5	3	75	-5	3	139	5	-3	203	-5	-3
12	15	3	76	-15	3	140	15	-3	204	-15	-3
13	13	3	77	-13	3	141	13	-3	205	-13	-3
14	9	3	78	-9	3	142	9	-3	206	-9	-3
15	11	3	79	-11	3	143	11	-3	207	-11	-3
16	1	7	80	-1	7	144	1	-7	208	-1	-7
17	3	7	81	-3	7	145	3	-7	209	-3	-7
18	7	7	82	-7	7	146	7	-7	210	-7	-7
19	5	7	83	-5	7	147	5	-7	211	-5	-7
20	15	7	84	-15	7	148	15	-7	212	-15	-7
21	13	7	85	-13	7	149	13	-7	213	-13	-7
22	9	7	86	-9	7	150	9	-7	214	-9	-7
23	11	7	87	-11	7	151	11	-7	215	-11	-7
24	1	5	88	-1	5	152	1	-5	216	-1	-5
25	3	5	89	-3	5	153	3	-5	217	-3	-5
26	7	5	90	-7	5	154	7	-5	218	-7	-5
27	5	5	91	-5	5	155	5	-5	219	-5	-5
28	15	5	92	-15	5	156	15	-5	220	-15	-5
29	13	5	93	-13	5	157	13	-5	221	-13	-5
30	9	5	94	-9	5	158	9	-5	222	-9	-5
31	11	5	95	-11	5	159	11	-5	223	-11	-5
32	1	15	96	-1	15	160	1	-15	224	-1	-15
33	3	15	97	-3	15	161	3	-15	225	-3	-15

Table 10 256-QAM Encoding Table

FIG. 17A

34	7	15	98	-7	15	162	7	-15	226	-7	-15
35	5	15	99	-5	15	163	5	-15	227	-5	-15
36	15	15	100	-15	15	164	15	-15	228	-15	-15
37	13	15	101	-13	15	165	13	-15	229	-13	-15
38	9	15	102	-9	15	166	9	-15	230	9	15
39	11	15	103	-11	15	167	11	-15	231	11	15
40	1	13	104	-1	13	168	1	-13	232	1	13
41	3	13	105	-3	13	169	3	-13	233	3	13
42	7	13	106	-7	13	170	7	-13	234	7	13
43	5	13	107	-5	13	171	5	-13	235	5	13
44	15	13	108	-15	13	172	15	-13	236	15	13
45	13	13	109	-13	13	173	13	-13	237	13	13
46	9	13	110	-9	13	174	9	-13	238	9	13
47	11	13	111	-11	13	175	11	-13	239	11	13
48	1	9	112	-1	9	176	1	-9	240	1	9
49	3	9	113	-3	9	177	3	-9	241	3	9
50	7	9	114	-7	9	178	7	-9	242	7	9
51	5	9	115	-5	9	179	5	-9	243	5	9
52	15	9	116	-15	9	180	15	-9	244	15	9
53	13	9	117	-13	9	181	13	-9	245	13	9
54	9	9	118	-9	9	182	9	-9	246	9	9
55	11	9	119	-11	9	183	11	-9	247	11	9
56	1	11	120	-1	11	184	1	-11	248	1	11
57	3	11	121	-3	11	185	3	-11	249	3	11
58	7	11	122	-7	11	186	7	-11	250	7	11
59	5	11	123	-5	11	187	5	-11	251	5	11
60	15	11	124	-15	11	188	15	-11	252	15	11
61	13	11	125	-13	11	189	13	-11	253	13	11
62	9	11	126	-9	11	190	9	-11	254	9	11
63	11	11	127	-11	11	191	11	-11	255	11	11

Table 10 (cont.) 256-QAM Encoding Table

FIG. 17B

Modulation	K_{MOD}
BPSK	1
QPSK	1/?2
8-QAM	1/?10
16-QAM	1/?10
32-QAM	1/?20
64-QAM	1/?42
128-QAM	1/?80
256-QAM	1/?170

Table 11 Modulation dependent normalization factor K_{MOD}

FIG. 18

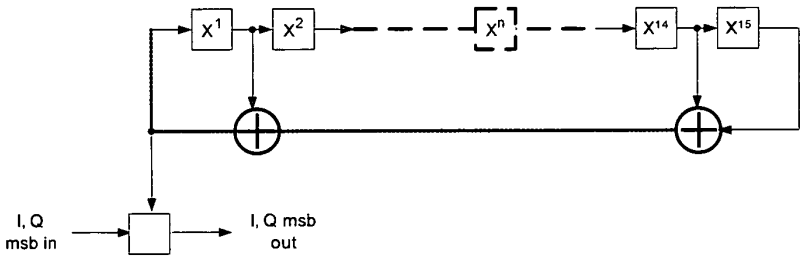

PN15 used for Byte Scrambling

FIG. 19

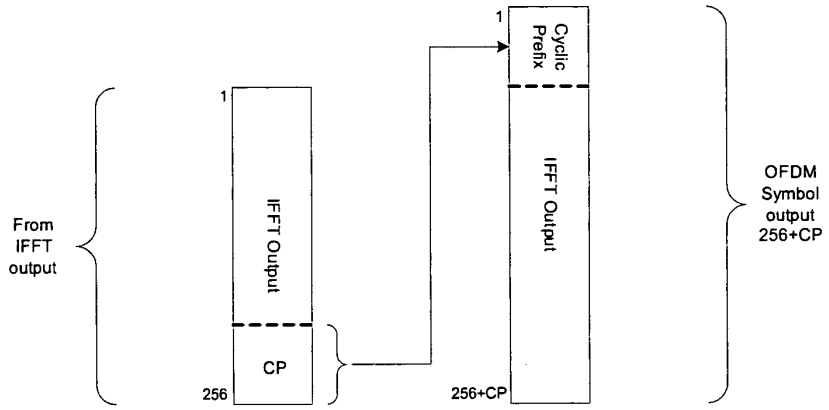

Cyclic Prefix Insertion Operation

FIG. 20

Type I

Short Training	Long Training
0-8	256 samples

Type II

Long Training	Long Training
0-8	512 samples

Type III

Short Training	Long Training	Fine Timing
0-8	256 samples	128 Samples

Type IV

Short Training	Long Training	Fine Timing
0-8	512 samples	128 Samples

Type V

Fine Timing
64 Samples

Preamble Type Structures

FIG. 21

	Preamble + Channel Estimate				Payload MPDU				
Packet type	ST	LT	FT	CE	modulation	Sub-Carriers	Cyclic Prefix	Content	FEC
IQ probe	8	8	0	1	16-QAM	2 (specified by receiver of probe)	0	Specified by Packet Profile	NA
EVM Probe	8	8	0	8	BPSK	All except unused per table	64 initially, 4-64 after EPP	PN15	NA
EPP	8	8	0	0	BPSK	None, time domain signal	0	PN15	NA
Robust	8	8	[F_a, A]	8	BPSK	Table 2, FIG. 7, except unused per table	64	MAC link packets	k=192, T=8
MPDU	0-8	4 0	Non [C]	0,1,2, 4,8	BPSK – QAM256 per bit-loading	Per bit-loading	4-64	MAC link & payload	First block k=192, T=8 Last block shortened
MAP MPDU	0-8	0,4,8	[F_a, B]	0,1,2, 4,8	BPSK – QAM256 per bit-loading	Per bit-loading	4-64	MAC MAPs	Fixed as provided in a robust MAP

Example Implementation of Communications System

FIG. 22

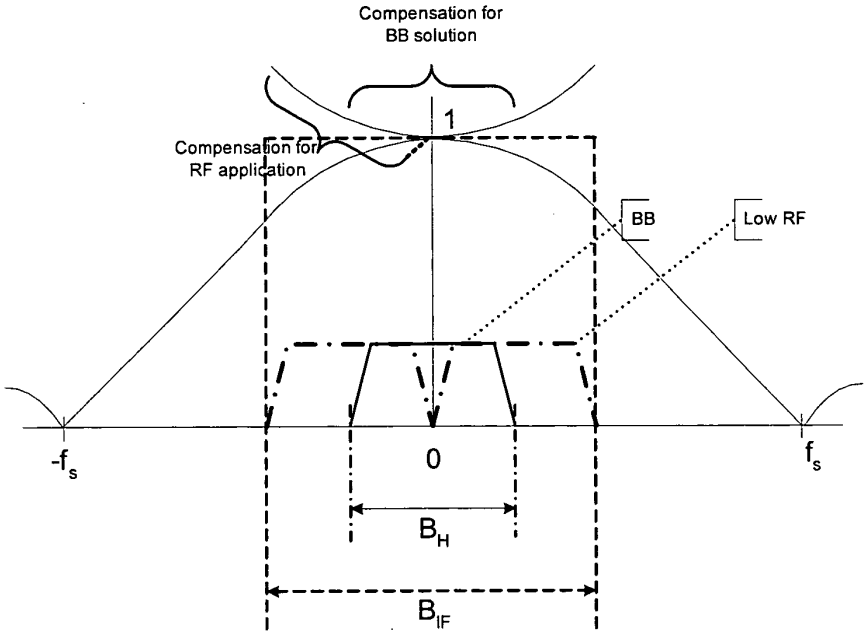

Zero-Order Hold and DAC Compensation

FIG. 23

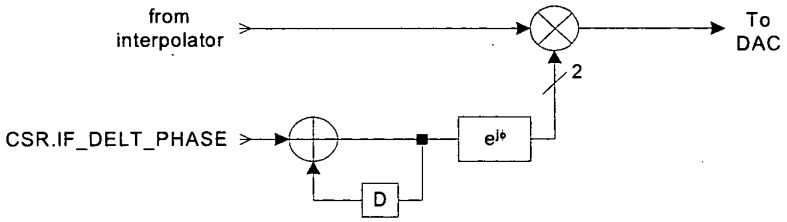

Low IF block diagram

FIG. 24

PTO/SB/35 (09-04)
Approved for use through 07/31/2006. OMB 0651-0031
U.S. Patent and Trademark Office; U. S. DEPARTMENT OF COMMERCE
Under the Paperwork Reduction Act of 1995, no persons are required to respond to a collection of information unless it displays a valid OMB control number.

NONPUBLICATION REQUEST UNDER 35 U.S.C. 122(b)(2)(B)(i)	First Named Inventor	Anton Monk
	Title	Physical Layer Transmitter For Use In a Broadband Local Area Network
	Attorney Docket Number	EC04003USU

I hereby certify that the invention disclosed in the attached application **has not and will not be** the subject of an application filed in another country, or under a multilateral agreement, that requires publication at eighteen months after filing.

I hereby request that the attached application not be published under 35 U.S.C. 122(b).

Signature	September 29, 2005 Date
Francisco A. Rubio-Campos Typed or printed name	45,358 Registration Number, if applicable
(949) 448-9410 Telephone Number	

This request must be signed in compliance with 37 CFR 1.33(b) and submitted with the application **upon filing.**

Applicant may rescind this nonpublication request at any time. If applicant rescinds a request that an application not be published under 35 U.S.C. 122(b), the application will be scheduled for publication at eighteen months from the earliest claimed filing date for which a benefit is claimed.

If applicant subsequently files an application directed to the invention disclosed in the attached application in another country, or under a multilateral international agreement, that requires publication of applications eighteen months after filing, the applicant **must** notify the United States Patent and Trademark Office of such filing within forty-five (45) days after the date of the filing of such foreign or international application. **Failure to do so will result in abandonment of this application (35 U.S.C. 122(b)(2)(B)(iii)).**

This collection of information is required by 37 CFR 1.213(a). The information is required to obtain or retain a benefit by the public which is to file (and by the USPTO to process) an application. Confidentiality is governed by 35 U.S.C. 122 and 37 CFR 1.11 and 1.14. This collection is estimated to take 6 minutes to complete, including gathering, preparing, and submitting the completed application form to the USPTO. Time will vary depending upon the individual case. Any comments on the amount of time you require to complete this form and/or suggestions for reducing this burden, should be sent to the Chief Information Officer, U.S. Patent and Trademark Office, U.S. Department of Commerce, P.O. Box 1450, Alexandria, VA 22313-1450. DO NOT SEND FEES OR COMPLETED FORMS TO THIS ADDRESS. **SEND TO: Commissioner for Patents, P.O. Box 1450, Alexandria, VA 22313-1450.**

If you need assistance in completing the form, call 1-800-PTO-9199 (1-800-786-9199) and select option 2.

UNITED STATES PATENT AND TRADEMARK OFFICE

UNITED STATES DEPARTMENT OF COMMERCE
United States Patent and Trademark Office
Address: COMMISSIONER FOR PATENTS
P.O. Box 1450
Alexandria, Virginia 22313-1450
www.uspto.gov

APPLICATION NUMBER	FILING OR 371 (c) DATE	FIRST NAMED APPLICANT	ATTORNEY DOCKET NUMBER
11/241,748	09/29/2005	Anton Monk	EC04003USU

CONFIRMATION NO. 2829

FORMALITIES LETTER

34408
THE ECLIPSE GROUP
10605 BALBOA BLVD., SUITE 300
GRANADA HILLS, CA 91344

Date Mailed: 10/27/2005

NOTICE TO FILE MISSING PARTS OF NONPROVISIONAL APPLICATION

FILED UNDER 37 CFR 1.53(b)

Filing Date Granted

Items Required To Avoid Abandonment:

An application number and filing date have been accorded to this application. The item(s) indicated below, however, are missing. Applicant is given **TWO MONTHS** from the date of this Notice within which to file all required items and pay any fees required below to avoid abandonment. Extensions of time may be obtained by filing a petition accompanied by the extension fee under the provisions of 37 CFR 1.136(a).

- The statutory basic filing fee is missing.
  Applicant must submit $ **150** *to complete the basic filing fee for a small entity.*
- The oath or declaration is missing. *A properly signed oath or declaration in compliance with 37 CFR 1.63, identifying the application by the above Application Number and Filing Date, is required.*
  Note: If a petition under 37 CFR 1.47 is being filed, an oath or declaration in compliance with 37 CFR 1.63 signed by all available joint inventors, or if no inventor is available by a party with sufficient proprietary interest, is required.

The applicant needs to satisfy supplemental fees problems indicated below.

The required item(s) identified below must be timely submitted to avoid abandonment:

- Additional claim fees of **$625** as a small entity, including any required multiple dependent claim fee, are required. Applicant must submit the additional claim fees or cancel the additional claims for which fees are due.
- To avoid abandonment, a surcharge (for late submission of filing fee, search fee, examination fee or oath or declaration) as set forth in 37 CFR 1.16(f) of $65 for a small entity in compliance with 37 CFR 1.27, must be submitted with the missing items identified in this letter.

SUMMARY OF FEES DUE:

Total additional fee(s) required for this application is **$1190** for a Small Entity

- **$150** Statutory basic filing fee.
- **$65** Surcharge.

- The application search fee has not been paid. Applicant must submit **$250** to complete the search fee.
- The application examination fee has not been paid. Applicant must submit **$100** to complete the examination fee for a small entity in compliance with 37 CFR 1.27

- Total additional claim fee(s) for this application is **$625**

  - **$625** for **25** total claims over 20.

Replies should be mailed to: Mail Stop Missing Parts
Commissioner for Patents
P.O. Box 1450
Alexandria VA 22313-1450

A copy of this notice MUST be returned with the reply.

Office of Initial Patent Examination (571) 272-4000, or 1-800-PTO-9199, or 1-800-972-6382
PART 3 - OFFICE COPY

FAX COVER SHEET

RECEIVED
CENTRAL FAX CENTER
MAR 0 8 2006

THE ECLIPSE GROUP

10605 Balboa Blvd., Suite 300
Granada Hills, CA 91344
Phone: (818) 488-8143
Fax: (818) 332-4205

Send to: Mail Stop Missing Parts	**From: Mariana Paula Noli**
Company: USPTO	Date: March 8, 2006
Fax Number: (571) 273-8300	Phone No.: (818) 488-8143

- ☐ Urgent
- ☐ Reply ASAP
- ☐ Please comment
- ☐ Please review
- ☐ For your information

Total pages, including cover: 16

Comments:

Applicant: Entropic Communications, Inc.
Title: "PHYSICAL LAYER TRANSMITTER FOR USE IN A BROADBAND LOCAL AREA NETWORK"
Application No.: 11/241,748
Attorney Docket Number: EC04003USU

Please acknowledge receipt of the following RESPONSE TO NOTICE OF MISSING PARTS:

1) Transmittal of Missing Parts (2 pages + copy);
2) Copy of the Notice to File Missing Parts mailed on October 27, 2005 (2 pages);
3) Petition for Extension of Time Under 37 CFR 1.136(a) PTO/SB/22 (1 page + copy);
4) Credit Card Authorization in the amount of $1,700.00 (1 page); and
5) Copy of the Combined Declaration and POA signed by inventors Anton Monk, Ron Porat, Wee-Peng Goh, Magnus Berggren, Ron Lee, Edward Warner, Brett Bernath, and Yusuf Ozturk (7 pages).

Certificate of Transmission

I hereby certify that this document (along with any papers referenced as being attached or enclosed) is being transmitted to the United States Patent and Trademark Office via facsimile to Fax No. (571) 273-8300, on the date set forth above.

Mariana Paula Noli

RECEIVED
CENTRAL FAX CENTER
MAR 0 8 2006

Atty. Docket: EC04003SU

PATENT
SERIAL NO. 11/241,748

IN THE UNITED STATES PATENT AND TRADEMARK OFFICE

In re Patent Application of Entropic Communications, Inc.	Group Art: 2661
Inventor(s): Anton Monk et al.	Examiner: Unassigned
Serial No.: 11/241,748	
Filed: 09/29/2005	
Title: Physical Layer Transmitter For Use In A Broadband Local Area Network	

CERTIFICATE OF TRANSMISSION

I hereby certify that this correspondence (along with any paper referred to as being attached or enclosed) is being transmitted to the United States Patent and Trademark Office, Fax No. (571) 273-8300, on March 8, 2006.

Mariana Paula Noli

Mail Stop Missing Parts
Commissioner for Patents
P.O. Box 1450
Alexandria, VA 22313-1450

TRANSMITTAL OF MISSING PARTS

Dear Commissioner:

Applicants are in receipt of the Notice to File Missing Parts, dated October 27, 2005, setting a two month shorten statutory period of December 27, 2005 to respond.

Applicants respectfully request an additional three (3) month extension of time to respond to the Notice of Missing Parts. An additional $510.00 is enclosed to cover the required extension fee.

In response to the Notice to File Missing Parts, Applicant has enclosed the following:

1. A Copy of the Notice to File Missing Parts mailed on October 27, 2005. (2 pages);

2. A Copy of the combined declaration and POA signed by inventors Anton Monk, Ron Porat, Wee-Peng Goh, Magnus Berggren, Ron Lee, Edward Warner and Yusuf Ozturk (7 pages);

Atty. Docket: EC04003SU

PATENT
SERIAL NO. 11/241,748

3. Credit Card Authorization in the amount of $1,700.00 ($150.00 Basic Statutory Filing Fee; $65.00 late oath or declaration surcharge; $250.00 for Search Fee; $100.00 Examination Fee; $625.00 for additional claims, $510.00 for three month extension of time).

The Commissioner is hereby authorized to charge any additional fees which may be required, or credit any overpayment, to our Deposit Account No. 502542. A copy of this sheet is enclosed.

Respectfully submitted,
THE ECLIPSE GROUP

Date: 3/8/2006

By: Jeffrey C. Wilk

Jeffrey C. Wilk, Reg. No. 42,227
Attorney for Applicants

10605 Balboa Blvd., Suite 300
Granada Hills, CA 91344
(818) 488-8148 Telephone
(818) 332-4205 Facsimile

Customer No. 34408

Atty. Docket: EC04003SU

PATENT
SERIAL NO. 11/241,748

3. Credit Card Authorization in the amount of $1,700.00 ($150.00 Basic Statutory Filing Fee; $65.00 late oath or declaration surcharge; $250.00 for Search Fee; $100.00 Examination Fee; $625.00 for additional claims, $510.00 for three month extension of time).

The Commissioner is hereby authorized to charge any additional fees which may be required, or credit any overpayment, to our Deposit Account No. 502542. A copy of this sheet is enclosed.

Respectfully submitted,
THE ECLIPSE GROUP

Date: 3/8/2006

By: Jeffrey C. Wilk

Jeffrey C. Wilk, Reg. No. 42,227
Attorney for Applicants

10605 Balboa Blvd., Suite 300
Granada Hills, CA 91344
(818) 488-8148 Telephone
(818) 332-4205 Facsimile

Customer No. 34408

UNITED STATES PATENT AND TRADEMARK OFFICE

UNITED STATES DEPARTMENT OF COMMERCE
United States Patent and Trademark Office
Address: COMMISSIONER FOR PATENTS
P.O. Box 1450
Alexandria, Virginia 22313-1450
www.uspto.gov

APPLICATION NUMBER	FILING OR 371 (c) DATE	FIRST NAMED APPLICANT	ATTORNEY DOCKET NUMBER
11/241,748	09/29/2005	Anton Monk	EC04003USU

34408
THE ECLIPSE GROUP
10605 BALBOA BLVD., SUITE 300
GRANADA HILLS, CA 91344

DOCKETED
NOV - 2 2005
ECLIPSE GROUP

CONFIRMATION NO. 2829
FORMALITIES LETTER

Date Mailed: 10/27/2005

NOTICE TO FILE MISSING PARTS OF NONPROVISIONAL APPLICATION

FILED UNDER 37 CFR 1.53(b)

Filing Date Granted

Items Required To Avoid Abandonment:

An application number and filing date have been accorded to this application. The item(s) indicated below, however, are missing. Applicant is given **TWO MONTHS** from the date of this Notice within which to file all required items and pay any fees required below to avoid abandonment. Extensions of time may be obtained by filing a petition accompanied by the extension fee under the provisions of 37 CFR 1.136(a).

- The statutory basic filing fee is missing.
  *Applicant must submit $ **150** to complete the basic filing fee for a small entity.*
- The oath or declaration is missing. *A properly signed oath or declaration in compliance with 37 CFR 1.63, identifying the application by the above Application Number and Filing Date, is required.*
  Note: If a petition under 37 CFR 1.47 is being filed, an oath or declaration in compliance with 37 CFR 1.63 signed by all available joint inventors, or if no inventor is available by a party with sufficient proprietary interest, is required.

The applicant needs to satisfy supplemental fees problems indicated below.

The required item(s) identified below must be timely submitted to avoid abandonment:

- Additional claim fees of **$625** as a small entity, including any required multiple dependent claim fee, are required. Applicant must submit the additional claim fees or cancel the additional claims for which fees are due.
- To avoid abandonment, a surcharge (for late submission of filing fee, search fee, examination fee or oath or declaration) as set forth in 37 CFR 1.16(f) of $65 for a small entity in compliance with 37 CFR 1.27, must be submitted with the missing items identified in this letter.

SUMMARY OF FEES DUE:

Total additional fee(s) required for this application is **$1190** for a Small Entity

- **$150** Statutory basic filing fee.
- **$65** Surcharge.

03/10/2006 WABDELR1 00000062 11241748

02 FC:2011	150.00	OP
03 FC:2111	250.00	OP
04 FC:2311	100.00	OP
05 FC:2051	65.00	OP
06 FC:2202	625.00	OP

- The application search fee has not been paid. Applicant must submit **$250** to complete the search fee.
- The application examination fee has not been paid. Applicant must submit **$100** to complete the examination fee for a small entity in compliance with 37 CFR 1.27

- Total additional claim fee(s) for this application is **$625**

  - **$625** for **25** total claims over 20.

Replies should be mailed to: Mail Stop Missing Parts
Commissioner for Patents
P.O. Box 1450
Alexandria VA 22313-1450

A copy of this notice MUST be returned with the reply.

Office of Initial Patent Examination (571) 272-4000, or 1-800-PTO-9199, or 1-800-972-6382
PART 1 - ATTORNEY/APPLICANT COPY

Atty. Docket No. EC04003USU PATENT

COMBINED DECLARATION AND POWER OF ATTORNEY

As a below-named inventor, I hereby declare that:

1. My residence, post office address, and citizenship are as stated below next to my name.

2. I believe I am an original, first and joint inventor of the subject matter which is claimed and for which a patent is sought on the invention titled:

PHYSICAL LAYER TRANSMITTER FOR USE IN A BROADBAND LOCAL AREA NETWORK

the specification of which (check one):

☐ is attached hereto.
☒ was filed on: September 29, 2005 as
Application Serial No.: Not Yet Assigned
☐ and was amended on:

3. I hereby state that I have reviewed and understand the contents of the above-identified specification, including the claims.

4. I acknowledge the duty to disclose information which is material to patentability as described in 37 C.F.R. 1.56, which is defined on the attached page.

5. I hereby declare that all statements made herein of my own knowledge are true and that all statements made on information and belief are believed to be true; and further that these statements were made with the knowledge that willful false statements and the like so made are punishable by fine or imprisonment, or both, under Section 1001 of Title 18 of the United States Code, and that such willful false statements may jeopardize the validity of the application or any patent issued thereon.

6. I hereby claim the benefit under 35 U.S.C. 119(e) of any United States provisional patent applications listed below.

Prior United States Application(s)

60/633,091	December 2, 2004	Pending
(Application Serial No.)	(Filing Date)	(Status)-(Patented, pending, abandoned)

PAGE 8/16 * RCVD AT 3/8/2006 8:46:10 PM [Eastern Standard Time] * SVR:USPTO-EFXRF-3/1 * DNIS:2738300 * CSID:8183324205 * DURATION (mm-ss):06-02

60/632,797	December 2, 2004	Pending
(Application Serial No.)	(Filing Date)	(Status)-(Patented, pending, abandoned)
60/633,002	December 2, 2004	Pending
(Application Serial No.)	(Filing Date)	(Status)-(Patented, pending, abandoned)
60/632,856	December 2, 2004	Pending
(Application Serial No.)	(Filing Date)	(Status)-(Patented, pending, abandoned)

7. I hereby appoint Jennifer H. Hamilton (Reg. No. 41,814), Francisco A. Rubio-Campos (Reg. No. 45,358), Gregory B. Gulliver (Reg. No. 44,138), Jeffrey C. Wilk (Reg. No. 42,227), David P. Gloekler (Reg. No. 41,037), Kevin E. Flynn (Reg. No. 37,325), James M. Brown (Reg. No. 30,033), and other registered patent attorneys and agents of the firm The Eclipse Group, as my attorneys with full power of substitution and revocation, to prosecute this application and to transact all business in the United States Patent and Trademark Office connected therewith.

Please direct all correspondence to:

Jennifer H. Hamilton
THE ECLIPSE GROUP
10605 Balboa Blvd., Suite 300
Granada Hills, CA 91344

Please direct telephone calls to Jennifer H. Hamilton at 818.831.9431 (facsimile 818.332.4205).

Full name of first joint inventor: ANTON MONK

Signature of inventor: A. Monk

Date: 10/05/05

Residence and Post Office Address: 5706 Willowmere Lane,
San Diego, CA 92130

Citizenship: US

PAGE 9/16 * RCVD AT 3/8/2006 8:46:10 PM [Eastern Standard Time] * SVR:USPTO-EFXRF-3/1 * DNIS:2738300 * CSID:8183324205 * DURATION (mm-ss):06-02

Full name of second joint inventor: RON PORAT

Signature of inventor: Ron Porat

Date: 10/6/05

Residence and Post Office Address: 2760 Farragut #112
San Diego, CA 92106

Citizenship: US

Full name of third joint inventor: WEE-PENG GOH

Signature of inventor: _____

Date: _____

Residence and Post Office Address: 38347 Chestnut Circle
Murrieta, CA 92563

Citizenship: Singapore

Full name of fourth joint inventor: MAGNUS BERGGREN

Signature of inventor: _____

Date: _____

Residence and Post Office Address: 972 Reed Avenue,
San Diego, CA 92109

Citizenship: Swedish

Full name of fifth joint inventor: RON LEE

Signature of inventor: _____

Date: _____

Residence and Post Office Address: 12774 Seabreeze Farms Drive,
San Diego, CA 92130

Citizenship: US

Full name of sixth joint inventor: EDWARD WARNER

Signature of inventor: _____

Date: _____

Residence and Post Office Address: 6967 Haworth Street
San Diego, CA 92122

Citizenship: US

PAGE 10/16 * RCVD AT 3/8/2006 8:46:10 PM [Eastern Standard Time] * SVR:USPTO-EFXRF-3/1 * DNIS:2738300 * CSID:8183324205 * DURATION (mm-ss):06-02

Full name of second joint inventor: RON PORAT

Signature of inventor: _____

Date: _____

Residence and Post Office Address: 2760 Farragut #112
San Diego, CA 92106

Citizenship: US

Full name of third joint inventor: WEE-PENG GOH

Signature of inventor: _____

Date: _____

Residence and Post Office Address: 38347 Chestnut Circle
Murrieta, CA 92563

Citizenship: Singapore

Full name of fourth joint inventor: MAGNUS BERGGREN

Signature of inventor: _____

Date: 10/6/5

Residence and Post Office Address: 972 Reed Avenue,
San Diego, CA 92109

Citizenship: Swedish

Full name of fifth joint inventor: RON LEE

Signature of inventor: _____

Date: 10/6/05

Residence and Post Office Address: 12774 Seabreeze Farms Drive,
San Diego, CA 92130

Citizenship: US

Full name of sixth joint inventor: EDWARD WARNER

Signature of inventor: _____

Date: 10-7-05

Residence and Post Office Address:

Citizenship:

PAGE 11/16 * RCVD AT 3/8/2006 8:46:10 PM [Eastern Standard Time] * SVR:USPTO-EFXRF-3/1 * DNIS:2738300 * CSID:8183324205 * DURATION (mm-ss):06-02

Full name of seventh joint inventor: BRETT BERNATH

Signature of inventor: _____

Date: 11/24/05

Residence and Post Office Address: 4167 Calle Marde Ballenas
San Diego, CA 92130

Citizenship: US

Full name of eighth joint inventor: YUSUF OZTURK

Signature of inventor: _____

Date: _____

Residence and Post Office Address: 13092 Coyote Avenue,
San Diego, CA 92129

Citizenship: Turkey

PAGE 12/16 * RCVD AT 3/8/2006 8:46:10 PM [Eastern Standard Time] * SVR:USPTO-EFXRF-3/1 * DNIS:2738300 * CSID:8183324205 * DURATION (mm-ss):06-02

Full name of seventh joint inventor: BRETT BERNATH

Signature of inventor: _____

Date: _____

Residence and Post Office Address: 4167 Calle Marde Ballenas
San Diego, CA 92130

Citizenship: US

Full name of eighth joint inventor: YUSUF OZTURK

Signature of inventor: _____

Date: _____

Residence and Post Office Address: 13092 Coyote Avenue,
San Diego, CA 92129

Citizenship: Turkey

PAGE 13/16 * RCVD AT 3/8/2006 8:46:10 PM [Eastern Standard Time] * SVR:USPTO-EFXRF-3/1 * DNIS:2738300 * CSID:8183324205 * DURATION (mm-ss):06-02

Section 1.56 Duty to Disclose Information Material to Patentability.

(a) A patent by its very nature is affected with a public interest. The public interest is best served, and the most effective patent examination occurs when, at the time an application is being examined, the Office is aware of and evaluates the teachings of all information material to patentability. Each individual associated with the filing and prosecution of a patent application has a duty of candor and good faith in dealing with the Office, which includes a duty to disclose to the Office all information known to that individual to be material to patentability as defined in this section. The duty to disclose information exists with respect to each pending claim until the claim is cancelled or withdrawn from consideration, or the application becomes abandoned. Information material to the patentability of a claim that is cancelled or withdrawn from consideration need not be submitted if the information is not material to the patentability of any claim remaining under consideration in the application. There is no duty to submit information which is not material to the patentability of any existing claim. The duty to disclose all information known to be material to patentability is deemed to be satisfied if all information known to be material to patentability of any claim issued in a patent was cited by the Office or submitted to the Office in the manner prescribed by §§ 1.97(b)-(d) and 1.98. However, no patent will be granted on an application in connection with which fraud on the Office was practiced or attempted or the duty of disclosure was violated through bad faith or intentional misconduct. The Office encourages applicants to carefully examine:

(1) prior art cited in search reports of a foreign patent office in a counterpart application, and

(2) the closest information over which individuals associated with the filing or prosecution of a patent application believe any pending claim patentably defines, to make sure that any material information contained therein is disclosed to the Office.

(b) Under this section, information is material to patentability when it is not cumulative to information already of record or being made of record in the application, and

(1) It establishes, by itself or in combination with other information, a prima facie case of unpatentability of a claim; or

(2) It refutes, or is inconsistent with, a position the applicant takes in:

(i) Opposing an argument of unpatentability relied on by the Office, or

(ii) Asserting an argument of patentability.

A prima facie case of unpatentability is established when the information compels a conclusion that a claim is unpatentable under the preponderance of evidence, burden-of-proof standard, giving each term in the claim its broadest reasonable construction consistent with the specification, and before any consideration is given to evidence which may be submitted in an attempt to establish a contrary conclusion of patentability.

(c) Individuals associated with the filing or prosecution of a patent application within the meaning of this section are:

(1) Each inventor named in the application;

(2) Each attorney or agent who prepares or prosecutes the application; and

(3) Every other person who is substantively involved in the preparation or prosecution of the application and who is associated with the inventor, with the assignee or with anyone to whom there is an obligation to assign the application.

(d) Individuals other than the attorney, agent or inventor may comply with this section by disclosing information to the attorney, agent, or inventor.

(e) In any continuation-in-part application, the duty under this section includes the duty to disclose to the Office all information known to the person to be material to patentability, as defined in paragraph (b) of this section, which became available between the filing date of the prior application and the national or PCT international filing date of the continuation-in-part application.

PAGE 14/16 * RCVD AT 3/8/2006 8:46:10 PM [Eastern Standard Time] * SVR:USPTO-EFXRF-3/1 * DNIS:2738300 * CSID:8183324205 * DURATION (mm-ss):06-02

RECEIVED
CENTRAL FAX CENTER

MAR 0 8 2006

PTO/SB/22 (12-04)
Approved for use through 07/31/2006. OMB 0651-0031
U.S. Patent and Trademark Office; U.S. DEPARMENT OF COMMERCE
Under the paperwork Reduction Act of 1995, no persons are required to respond to a collection of information unless it displays a valid OMB control number.

PETITION FOR EXTENSION OF TIME UNDER 37 CFR 1.136(a) FY 2005 *(Fees pursuant to the Consolidated Appropriations Act, 2005 (H.R. 4818).)*	Docket Number (Optional) EC04003USU
Application Number 11/241,748	Filed 09/29/2005
For Physical Layer Trnasmitter for Use In a Broadband Local Area Network	
Art Unit 2661	Examiner Not Yet Assigned

This is a request under the provisions of 37 CFR 1.136(a) to extend the period for filing a reply in the above identified application.

The requested extension and fee are as follows (check time period desired and enter the appropriate fee below):

		Fee	Small Entity Fee	
☐	One month (37 CFR 1.17(a)(1))	$120	$60	$
☐	Two months (37 CFR 1.17(a)(2))	$450	$225	$
☒	Three months (37 CFR 1.17(a)(3))	$1020	$510	$ 510.00
☐	Four months (37 CFR 1.17(a)(4))	$1590	$795	$
☐	Five months (37 CFR 1.17(a)(5))	$2160	$1080	$

☒ Applicant claims small entity status. See 37 CFR 1.27.

☐ A check in the amount of the fee is enclosed.

☒ Payment by credit card. Form PTO-2038 is attached.

☐ The Director has already been authorized to charge fees in this application to a Deposit Account.

☒ The Director is hereby authorized to charge any fees which may be required, or credit any overpayment, to Deposit Account Number 502542. I have enclosed a duplicate copy of this sheet.

WARNING: Information on this form may become public. Credit card information should not be included on this form. Provide credit card information and authorization on PTO-2038.

I am the

☐ applicant/inventor.

☐ assignee of record of the entire interest. See 37 CFR 3.71. Statement under 37 CFR 3.73(b) is enclosed (Form PTO/SB/96).

☒ attorney or agent of record. Registration Number 42,227

☐ attorney or agent under 37 CFR 1.34. Registration number if acting under 37 CFR 1.34 _____

Jeffrey C. Wilk — Signature

March 8, 2006 — Date

Jeffrey C. Wilk — Typed or printed name

(818) 488-8148 — Telephone Number

NOTE: Signatures of all the inventors or assignees of record of the entire interest or their representative(s) are required. Submit multiple forms if more than one signature is required, see below.

☐ Total of _____ forms are submitted.

This collection of information is required by 37 CFR 1.136(a). The information is required to obtain or retain a benefit by the public which is to file (and by the USPTO to process) an application. Confidentiality is governed by 35 U.S.C. 122 and 37 CFR 1.11 and 1.14. This collection is estimated to take 6 minutes to complete, including gathering, preparing, and submitting the completed application form to the USPTO. Time will vary depending upon the individual case. Any comments on the amount of time you require to complete this form and/or suggestions for reducing this burden, should be sent to the Chief Information Officer, U.S. Patent and Trademark Office, U.S. Department of Commerce, P.O. Box 1450, Alexandria, VA 22313-1450. DO NOT SEND FEES OR COMPLETED FORMS TO THIS ADDRESS. SEND TO: Commissioner for Patents, P.O. Box 1450, Alexandria, VA 22313-1450.

If you need assistance in completing the form, call 1-800-PTO-9199 and select option 2.

03/10/2006 WABDELR1 00000062 11241748 510.00 OP
01 FC:2253

RECEIVED
CENTRAL FAX CENTER
AUG 2 5 2006

FAX COVER SHEET

THE ECLIPSE GROUP

10605 Balboa Blvd., Suite 300
Granada Hills, CA 91344
Phone: (818) 488-8140
Fax: (818) 332-4205

Send to: USPTO	**From: Mariana Paula Noli**
Company: USPTO	Date: August 25 , 2006
Fax Number: (571) 273-8300	Phone No.: (818) 488-8143

- ☐ Urgent
- ☐ Reply ASAP
- ☐ Please comment
- ☐ Please review
- ☐ For your information

Total pages, including cover: 5

Comments:

Applicant: Entropic Communications, Inc.
Title: "Physical Layer Transmitter for Use in a Broadband Local Area Network"
Application No.: 11/241,748
Attorney Docket Number: EC04003USU

Please acknowledge receipt of the following LOSS OF ENTITLEMENT TO SMALL ENTITY STATUS UNDER 37 C.F.R. § 1.27 (g)(2):

1) Loss of Entitlement to Small Entity Status under 37 C.F.R. § 1.27(g) (2) (2 pages + copy); and
2) Credit Card Authorization in the amount of $1,700.00 (1 page).

CERTIFICATE OF TRANSMISSION

I hereby certify that this document (along with any papers referenced as being attached or enclosed) is being transmitted to the United States Patent and Trademark Office via facsimile to Fax No. (571) 273-8300, on the date set forth above.

Mariana Paula Noli

The Eclipse Group Docket No. EC04003USU

DOCKET NO.:	EC04003USU
APPLICANT:	Entropic Communications, Inc.
TITLE:	Physical Layer Transmitter for Use in a Broadband Local Area Network
SERIAL NO.:	11/241,748
FILING DATE:	09/29/2005
EXAMINER:	Not Yet Assigned
GROUP ART UNIT:	2661
CONFIRMATION NO.:	2829

RECEIVED
CENTRAL FAX CENTER
AUG 2 5 2006

CERTIFICATE OF TRANSMISSION
I certify that on August 25, 2006, the attached correspondence is being transmitted via facsimile to the Commissioner for Patents at (571) 273-8300.

Mariana Paula Noli

08/28/2006 SLUANG1 00000001 11241748

01	FC:1011	300.00 OP
02	FC:1111	500.00 OP
03	FC:1311	200.00 OP
04	FC:1202	1250.00 OP
05	FC:1051	130.00 OP
06	FC:1253	1020.00 OP

Commissioner for Patents
P.O. Box 1450
Alexandria, VA 22213-1450

LOSS OF ENTITLEMENT TO SMALL ENTITY STATUS UNDER 37 C.F.R. § 1.27(g)(2)

Dear Commissioner:

The above-referenced patent application has been assigned to Applicant Entropic Communications, Inc. ("Entropic"), by Assignment recorded March 8, 2006, at Reel 017319, Frame 0389. Entropic's status as a small entity has changed due to its entry into a License Agreement in connection with this matter with an entity that does not qualify as a small entity. The undersigned attorney was not made aware of the License Agreement until after the filing date of this application. The above-referenced patent application is no longer entitled to small entity status.

PAGE 2/5 * RCVD AT 8/25/2006 4:25:22 PM [Eastern Daylight Time] * SVR:USPTO-EFXRF-3/3 * DNIS:2738300 * CSID:8183324205 * DURATION (mm-ss):01-48

The Eclipse Group Docket No. EC04003USU

Because this matter was erroneously submitted as an application entitled to small entity status and in order to correct this inadvertent mistake, enclosed herewith is a Credit Card Authorization in the amount of $1,700.00 to cover the difference in fees between the current fee for a non-provisional application submitted by an entity not entitled to small entity status and the fee for a non-provisional application submitted by a small entity previously paid with a Transmittal of Missing Parts submitted March 8, 2006, together with the additional fees required for the late oath or declaration surcharge, the additional claims, and a three-month extension of time. The Commissioner is hereby authorized to charge any additional fees as required or credit any overpayment to Deposit Account No. 50-2542. A duplicate copy of this notification of Loss of Entitlement to Small Entity Status is enclosed.

Correction of the entity status of said application is respectfully requested to be entered into the records of the United States Patent and Trademark Office. This change of entity status is signed by an attorney of record as required by 37 C.F.R. § 1.33(b).

Respectfully submitted,

THE ECLIPSE GROUP LLP
Attorney for Applicant

Date: 8/25/06

By Jeffrey C. Wilk

Jeffrey C. Wilk, Reg. No. 42,227

10605 Balboa Blvd., Suite 300
Granada Hills, CA 91344

(818) 488-8148 Telephone
(818) 332-4205 Facsimile
jcw@eclipsegrp.com

```
Adjustment date: 08/28/2006  SLUANG1
03/10/2006 WABDELR1 00000062 11241748
01 FC:2253                    -510.00 OP
Adjustment date: 08/28/2006  SLUANG1
03/10/2006 WABDELR1 00000062 11241748
02 FC:2011                    -150.00 OP
03 FC:2111                    -250.00 OP
04 FC:2311                    -100.00 OP
05 FC:2051                     -65.00 OP
06 FC:2202                    -625.00 OP
```

Enc. Credit Card Authorization

Customer No. 34408

PAGE 3/5 * RCVD AT 8/25/2006 4:25:22 PM [Eastern Daylight Time] * SVR:USPTO-EFXRF-3/3 * DNIS:2738300 * CSID:8183324205 * DURATION (mm-ss):01-48

The Eclipse Group Docket No. EC04003USU

Because this matter was erroneously submitted as an application entitled to small entity status and in order to correct this inadvertent mistake, enclosed herewith is a Credit Card Authorization in the amount of $1,700.00 to cover the difference in fees between the current fee for a non-provisional application submitted by an entity not entitled to small entity status and the fee for a non-provisional application submitted by a small entity previously paid with a Transmittal of Missing Parts submitted March 8, 2006, together with the additional fees required for the late oath or declaration surcharge, the additional claims, and a three-month extension of time. The Commissioner is hereby authorized to charge any additional fees as required or credit any overpayment to Deposit Account No. 50-2542. A duplicate copy of this notification of Loss of Entitlement to Small Entity Status is enclosed.

Correction of the entity status of said application is respectfully requested to be entered into the records of the United States Patent and Trademark Office. This change of entity status is signed by an attorney of record as required by 37 C.F.R. § 1.33(b).

Respectfully submitted,

THE ECLIPSE GROUP LLP
Attorney for Applicant

Date: 8/25/06.

By Jeffrey C. Wilk

Jeffrey C. Wilk, Reg. No. 42,227

10605 Balboa Blvd., Suite 300
Granada Hills, CA 91344

(818) 488-8148 Telephone
(818) 332-4205 Facsimile
jcw@eclipsegrp.com

Enc. Credit Card Authorization

Customer No. 34408

PAGE 4/5 * RCVD AT 8/25/2006 4:25:22 PM [Eastern Daylight Time] * SVR:USPTO-EFXRF-3/3 * DNIS:2738300 * CSID:8183324205 * DURATION (mm-ss):01-48

UNITED STATES PATENT AND TRADEMARK OFFICE

UNITED STATES DEPARTMENT OF COMMERCE
United States Patent and Trademark Office
Address: COMMISSIONER FOR PATENTS
P.O. Box 1450
Alexandria, Virginia 22313-1450
www.uspto.gov

APPLICATION NUMBER	FILING or 371(c) DATE	GRP ART UNIT	FIL FEE REC'D	ATTY.DOCKET.NO	TOT CLAIMS	IND CLAIMS
11/241,748	09/29/2005	2616	2380	EC04003USU	45	3

CONFIRMATION NO. 2829

34408
THE ECLIPSE GROUP
10605 BALBOA BLVD., SUITE 300
GRANADA HILLS, CA91344

UPDATED FILING RECEIPT

Date Mailed: 05/10/2007

Receipt is acknowledged of this regular Patent Application. It will be considered in its order and you will be notified as to the results of the examination. Be sure to provide the U.S. APPLICATION NUMBER, FILING DATE, NAME OF APPLICANT, and TITLE OF INVENTION when inquiring about this application. Fees transmitted by check or draft are subject to collection. Please verify the accuracy of the data presented on this receipt. **If an error is noted on this Filing Receipt, please mail to the Commissioner for Patents P.O. Box 1450 Alexandria Va 22313-1450. Please provide a copy of this Filing Receipt with the changes noted thereon. If you received a "Notice to File Missing Parts" for this application, please submit any corrections to this Filing Receipt with your reply to the Notice. When the USPTO processes the reply to the Notice, the USPTO will generate another Filing Receipt incorporating the requested corrections (if appropriate).**

Applicant(s)

Anton Monk, San Diego, CA;
Ron Porat, San Diego, CA;
Wee-Peng Goh, Murrieta, CA;
Magnus Berggren, San Diego, CA;
Ron Lee, San Diego, CA;
Edward Warner, San Diego, CA;
Brett Bernath, San Diego, CA;
Yusuf Ozturk, San Diego, CA;

Power of Attorney:

Jay Brown--30033
Kevin Flynn--37325
David Gloekler--41037
Jennifer Hamilton--41814
Jeffrey Wilk--42227
Gregory Gulliver--44138
Francisco Rubio-Campos--45358

Domestic Priority data as claimed by applicant

This appln claims benefit of 60/633,091 12/02/2004
and claims benefit of 60/632,797 12/02/2004
and claims benefit of 60/633,002 12/02/2004
and claims benefit of 60/632,856 12/02/2004

Foreign Applications

If Required, Foreign Filing License Granted: 10/26/2005

The country code and number of your priority application, to be used for filing abroad under the Paris Convention, is

US11/241,748

Projected Publication Date: Request for Non-Publication Acknowledged

Non-Publication Request: Yes

Early Publication Request: No

Title

Physical layer transmitter for use in a broadband local area network

Preliminary Class

370

PROTECTING YOUR INVENTION OUTSIDE THE UNITED STATES

Since the rights granted by a U.S. patent extend only throughout the territory of the United States and have no effect in a foreign country, an inventor who wishes patent protection in another country must apply for a patent in a specific country or in regional patent offices. Applicants may wish to consider the filing of an international application under the Patent Cooperation Treaty (PCT). An international (PCT) application generally has the same effect as a regular national patent application in each PCT-member country. The PCT process **simplifies** the filing of patent applications on the same invention in member countries, but **does not result** in a grant of "an international patent" and does not eliminate the need of applicants to file additional documents and fees in countries where patent protection is desired.

Almost every country has its own patent law, and a person desiring a patent in a particular country must make an application for patent in that country in accordance with its particular laws. Since the laws of many countries differ in various respects from the patent law of the United States, applicants are advised to seek guidance from specific foreign countries to ensure that patent rights are not lost prematurely.

Applicants also are advised that in the case of inventions made in the United States, the Director of the USPTO must issue a license before applicants can apply for a patent in a foreign country. The filing of a U.S. patent application serves as a request for a foreign filing license. The application's filing receipt contains further information and guidance as to the status of applicant's license for foreign filing.

Applicants may wish to consult the USPTO booklet, "General Information Concerning Patents" (specifically, the section entitled "Treaties and Foreign Patents") for more information on timeframes and deadlines for filing foreign patent applications. The guide is available either by contacting the USPTO Contact Center at 800-786-9199, or it can be viewed on the USPTO website at http://www.uspto.gov/web/offices/pac/doc/general/index.html.

For information on preventing theft of your intellectual property (patents, trademarks and copyrights), you may wish to consult the U.S. Government website, http://www.stopfakes.gov. Part of a Department of Commerce initiative, this website includes self-help "toolkits" giving innovators guidance on how to protect intellectual property in specific countries such as China, Korea and Mexico. For questions regarding patent enforcement issues, applicants may call the U.S. Government hotline at 1-866-999-HALT (1-866-999-4158).

LICENSE FOR FOREIGN FILING UNDER

Title 35, United States Code, Section 184

Title 37, Code of Federal Regulations, 5.11 & 5.15

GRANTED

The applicant has been granted a license under 35 U.S.C. 184, if the phrase "IF REQUIRED, FOREIGN FILING LICENSE GRANTED" followed by a date appears on this form. Such licenses are issued in all applications where the conditions for issuance of a license have been met, regardless of whether or not a

license may be required as set forth in 37 CFR 5.15. The scope and limitations of this license are set forth in 37 CFR 5.15(a) unless an earlier license has been issued under 37 CFR 5.15(b). The license is subject to revocation upon written notification. The date indicated is the effective date of the license, unless an earlier license of similar scope has been granted under 37 CFR 5.13 or 5.14.

This license is to be retained by the licensee and may be used at any time on or after the effective date thereof unless it is revoked. This license is automatically transferred to any related applications(s) filed under 37 CFR 1.53(d). This license is not retroactive.

The grant of a license does not in any way lessen the responsibility of a licensee for the security of the subject matter as imposed by any Government contract or the provisions of existing laws relating to espionage and the national security or the export of technical data. Licensees should apprise themselves of current regulations especially with respect to certain countries, of other agencies, particularly the Office of Defense Trade Controls, Department of State (with respect to Arms, Munitions and Implements of War (22 CFR 121-128)); the Bureau of Industry and Security, Department of Commerce (15 CFR parts 730-774); the Office of Foreign AssetsControl, Department of Treasury (31 CFR Parts 500+) and the Department of Energy.

NOT GRANTED

No license under 35 U.S.C. 184 has been granted at this time, if the phrase "IF REQUIRED, FOREIGN FILING LICENSE GRANTED" DOES NOT appear on this form. Applicant may still petition for a license under 37 CFR 5.12, if a license is desired before the expiration of 6 months from the filing date of the application. If 6 months has lapsed from the filing date of this application and the licensee has not received any indication of a secrecy order under 35 U.S.C. 181, the licensee may foreign file the application pursuant to 37 CFR 5.15(b).

UNITED STATES PATENT AND TRADEMARK OFFICE

UNITED STATES DEPARTMENT OF COMMERCE
United States Patent and Trademark Office
Address: COMMISSIONER FOR PATENTS
P.O. Box 1450
Alexandria, Virginia 22313-1450
www.uspto.gov

APPLICATION NUMBER	PATENT NUMBER	GROUP ART UNIT	FILE WRAPPER LOCATION
11/241,748		2617	

Correspondence Address / Fee Address Change

The following fields have been set to Customer Number 78271 on 03/17/2008

- Correspondence Address
- Maintenance Fee Address

The address of record for Customer Number 78271 is:
The Eclipse Group LLP
10605 Balboa Blvd
Suite 300
Granada Hills,CA 91344

UNITED STATES PATENT AND TRADEMARK OFFICE

UNITED STATES DEPARTMENT OF COMMERCE
United States Patent and Trademark Office
Address: COMMISSIONER FOR PATENTS
P.O. Box 1450
Alexandria, Virginia 22313-1450
www.uspto.gov

APPLICATION NUMBER	PATENT NUMBER	GROUP ART UNIT	FILE WRAPPER LOCATION
11/241,748		2617	

Correspondence Address / Fee Address Change

The following fields have been set to Customer Number 78271 on 03/24/2008

- Correspondence Address
- Maintenance Fee Address

The address of record for Customer Number 78271 is:
The Eclipse Group LLP
10605 Balboa Blvd
Suite 300
Granada Hills,CA 91344

UNITED STATES PATENT AND TRADEMARK OFFICE

UNITED STATES DEPARTMENT OF COMMERCE
United States Patent and Trademark Office
Address: COMMISSIONER FOR PATENTS
P.O. Box 1450
Alexandria, Virginia 22313-1450
www.uspto.gov

APPLICATION NO.	FILING DATE	FIRST NAMED INVENTOR	ATTORNEY DOCKET NO.	CONFIRMATION NO.
11/241,748	09/29/2005	Anton Monk	EC04003USU	2829

78271 7590 04/01/2009
The Eclipse Group LLP
10605 Balboa Blvd
Suite 300
Granada Hills, CA 91344

EXAMINER
CHEN, CAI Y

ART UNIT	PAPER NUMBER
2425	

MAIL DATE	DELIVERY MODE
04/01/2009	PAPER

Please find below and/or attached an Office communication concerning this application or proceeding.

The time period for reply, if any, is set in the attached communication.

PTOL-90A (Rev. 04/07)

Office Action Summary	Application No.	Applicant(s)	
	11/241,748	MONK ET AL.	
	Examiner	Art Unit	
	CAI CHEN	2425	

-- The MAILING DATE of this communication appears on the cover sheet with the correspondence address --

Period for Reply

A SHORTENED STATUTORY PERIOD FOR REPLY IS SET TO EXPIRE 3 MONTH(S) OR THIRTY (30) DAYS, WHICHEVER IS LONGER, FROM THE MAILING DATE OF THIS COMMUNICATION.

- Extensions of time may be available under the provisions of 37 CFR 1.136(a). In no event, however, may a reply be timely filed after SIX (6) MONTHS from the mailing date of this communication.
- If NO period for reply is specified above, the maximum statutory period will apply and will expire SIX (6) MONTHS from the mailing date of this communication.
- Failure to reply within the set or extended period for reply will, by statute, cause the application to become ABANDONED (35 U.S.C. § 133). Any reply received by the Office later than three months after the mailing date of this communication, even if timely filed, may reduce any earned patent term adjustment. See 37 CFR 1.704(b).

Status

1)☐ Responsive to communication(s) filed on _____.

2a)☐ This action is **FINAL**. 2b)☒ This action is non-final.

3)☐ Since this application is in condition for allowance except for formal matters, prosecution as to the merits is closed in accordance with the practice under *Ex parte Quayle*, 1935 C.D. 11, 453 O.G. 213.

Disposition of Claims

4)☒ Claim(s) 1-45 is/are pending in the application.

4a) Of the above claim(s) _____ is/are withdrawn from consideration.

5)☐ Claim(s) _____ is/are allowed.

6)☒ Claim(s) 1-45 is/are rejected.

7)☒ Claim(s) 13 is/are objected to.

8)☐ Claim(s) _____ are subject to restriction and/or election requirement.

Application Papers

9)☐ The specification is objected to by the Examiner.

10)☒ The drawing(s) filed on 25 September 2005 is/are: a)☒ accepted or b)☐ objected to by the Examiner.

Applicant may not request that any objection to the drawing(s) be held in abeyance. See 37 CFR 1.85(a).

Replacement drawing sheet(s) including the correction is required if the drawing(s) is objected to. See 37 CFR 1.121(d).

11)☐ The oath or declaration is objected to by the Examiner. Note the attached Office Action or form PTO-152.

Priority under 35 U.S.C. § 119

12)☐ Acknowledgment is made of a claim for foreign priority under 35 U.S.C. § 119(a)-(d) or (f).

a)☐ All b)☐ Some * c)☐ None of:

1.☐ Certified copies of the priority documents have been received.

2.☐ Certified copies of the priority documents have been received in Application No. _____.

3.☐ Copies of the certified copies of the priority documents have been received in this National Stage application from the International Bureau (PCT Rule 17.2(a)).

* See the attached detailed Office action for a list of the certified copies not received.

Attachment(s)

1) ☒ Notice of References Cited (PTO-892)
2) ☐ Notice of Draftsperson's Patent Drawing Review (PTO-948)
3) ☐ Information Disclosure Statement(s) (PTO/SB/08) Paper No(s)/Mail Date _____.
4) ☐ Interview Summary (PTO-413) Paper No(s)/Mail Date. _____ .
5) ☐ Notice of Informal Patent Application
6) ☐ Other: _____.

DETAILED ACTION

Claim Rejections - 35 USC § 101

35 U.S.C. 101 reads as follows:

> Whoever invents or discovers any new and useful process, machine, manufacture, or composition of matter, or any new and useful improvement thereof, may obtain a patent therefor, subject to the conditions and requirements of this title.

Claim(s) 26-44 are rejected under 35 U.S.C. 101 as not falling within one of the four statutory categories of invention.

A judicial exception claim is non-statutory for solely embodying an abstract idea, natural phenomenon, or law of nature. See M.P.E.P. § 2106(IV)(C)(2). However, a practical application of a judicial exception claim is a § 101 statutory claim "when it:

(A) 'transforms' an article or physical object to a different state or thing [(i.e., a physical transformation, see below)]; or

(B) otherwise produces a useful, concrete and tangible result, based on the factors discussed below .... " Id.

§ 101 statutory transformations of intangible articles or physical objects must be physical transformations (i. e., a physical component to the transformation must be involved). See M.P.E.P. § 2106(IV)(C)(2) (requiring the element "provides a transformation or reduction of an article to a different state of thing", a "practical application by physical transformation") and Interim Guidelines for Examination of Patent Applications for Patent Subject Matter Eligibility, Official Gazette notice, 22 November 2005, Annex (II)(B)(iii); (III).

While claims 26-44 recite a series of steps or acts to be performed, a statutory "process" under 35 U.S.C. 101 must (1) be tied to another statutory category (such as a particular apparatus), or (2) transform underlying subject matter (such as an article or material) to a different state or thing (Reference the May 15, 2008 memorandum issued by Deputy Commissioner for Patent Examining Policy, John J. Love, titled "Clarification of 'Processes' under 35 U.S.C. 101").

The instant claims neither transform underlying subject matter nor positively tie to another statutory category that accomplishes the claimed method steps, and therefore do not qualify as a statutory process. Claims 26-44 are non-statutory for being a judicial exception, an abstract idea.

Specification

The specification is objected to as failing to provide proper antecedent basis for the claimed subject matter. See 37 CFR 1.75(d)(1) and MPEP § 608.01(o). Correction of the following is required:

Regarding claim 1, the claim limitation "pre-coder" was never defined in the specification.

Regarding claim 45, the claim limitation "Radio Frequency subsystem" was never defined in the specification.

Claim Objections

A series of singular dependent claims is permissible in which a dependent claim refers to a preceding claim which, in turn, refers to another preceding claim.

A claim which depends from a dependent claim should not be separated by any claim which does not also depend from said dependent claim. It should be kept in mind that a dependent claim may refer to any preceding independent claim. In general, applicant's sequence will not be changed. See MPEP § 608.01(n).

Regarding claim 13, the instant claim cannot depend on the self claim (claim 13).

Claim Rejections - 35 USC § 102

1 The following is a quotation of the appropriate paragraphs of 35 U.S.C. 102 that form the basis for the rejections under this section made in this Office action:

> (b) the invention was patented or described in a printed publication in this or a foreign country or in public use or on sale in this country, more than one year prior to the date of application for patent in the United States.

2 Claims 26 and 37-44 are rejected under 35 U.S.C.102 (b) as being anticipated by Gurantz (US 2002/0166124 A1).

Regarding claim 26, Gurantz discloses a method for communication to at least one node across a building coaxial network (Fig. 2, 5, abstract), the method comprising:

utilizing adaptive communication techniques to produce communication data (Fig. 2, para. 54, an adaptive equalizer is uses for data communication within LAN);

and transmitting the communication data to communicate to the at least one node (Fig. 2, para. 20),

wherein transmitting utilizes Time Division Multiple Access ("TDMA") (para. 38-39, page 5, claim 18).

Regarding claim 37, Gurantz discloses wherein the transmitting includes transmitting utilizing multiple frequencies (para. 49-53).

Regarding claim 38, Gurantz discloses wherein transmitting utilizing multiple frequencies utilizes multi-carrier modulation (para. 49-53).

Regarding claim 39, Gurantz discloses transmitting includes transmitting utilizing time division duplexing ("TDD") (para. 38-39).

Regarding claim 40, Gurantz discloses wherein the adaptive communication techniques utilizes orthogonal frequency division multiplexing ("OFDM") with bit-loading (para. 46-49, para. 52-55).

Regarding claim 41, Gurantz discloses wherein the formatting information utilizes scrambling (para. 46-49, para. 52-55, OFDM frequency bins scrambling).

Regarding claim 42, Gurantz discloses wherein the scrambling is byte scrambling (para. 46-49, para. 52-55, OFDM frequency bins scrambling).

Regarding claim 43, Gurantz discloses wherein the scrambling is OFDM bin scrambling (para. 46-49, para. 52-55, OFDM frequency bins scrambling).

Regarding claim 44, Gurantz discloses including transmitting a probe signal to the at least one node (para. 20, para. 49-53, the modem has a transmitter transmit a OFDM signal to others within the LAN).

Claim Rejections - 35 USC § 103

3. The following is a quotation of 35 U.S.C. 103(a) which forms the basis for all obviousness rejections set forth in this Office action:

> (a) A patent may not be obtained though the invention is not identically disclosed or described as set forth in section 102 of this title, if the differences between the subject matter sought to be patented and the prior art are such that the subject matter as a whole would have been obvious at the time the invention was made to a person having ordinary skill in the art to which said subject matter pertains. Patentability shall not be negatived by the manner in which the invention was made.

4. Claims 1-8, 10-11, 14, 16-25, and 27-34 are rejected under 35 U.S.C. 103(a) as being unpatentable over Gurantz in view of Sambamurthy (6,085,248).

Regarding claim 1, Gurantz discloses modem for communication to at least one node across a building coaxial network (Fig. 2, abstract, para. 20), the modem comprising:

a transmitter (Fig. 1, el. 270 or el. 280, para. 20, the modem has a transmitter); and

a pre-coder in signal communication with the transmitter (para. 47, an encoder encodes data bits for transmission),

wherein the pre-coder utilizes adaptive communication techniques to communicate to the at least one node (Fig. 2, para. 54, an adaptive equalizer is uses for data communication within LAN),

and wherein the transmitter communicates with at least one node using Time Division Multiple Access ("TDMA") (para. 38-39, page 5, claim 18).

Gurantz does not explicitly disclose utilizing packet communications.

Sambamurthy teaches utilizing packet communications (abstract, Fig. 1B, Fig. 5A, col. 5, lines 60-col. 6, line 12, col. 22, lines 5-53).

It would be obvious to one of ordinary in the art at the time of invention to modify Gurantz to include utilizing packet communications, as taught by Sambamurthy, in order to perform better in data communication by using packet communication when during high data communication traffic period (col. 6, lines 1-12).

Regarding claim 2, Gurantz in view of Sambamurthy discloses wherein the transmitter is a baseband transmitter (Gurantz, para. 42, transmitting the baseband signal).

Regarding claim 3, Gurantz in view of Sambamurthy discloses wherein the transmitter is a Radio Frequency ("RF") transmitter (Gurantz, para. 42 and 49).

Regarding claim 4, Gurantz in view of Sambamurthy teaches wherein the packet communication utilizes services (Sambamurthy, abstract, Fig. 1B, Fig. 5A, col. 5, lines 60-col. 6, line 12, col. 22, lines 5-53).

Regarding claim 5, Gurantz in view of Sambamurthy further discloses wherein the transmitter communicates with at least one node using Time Division Duplex ("TDD") (Gurantz, para. 38-39, Sambamurthy, abstract, Fig. 1B, Fig. 5A, col. 5, lines 60-col. 6, line 12, col. 22, lines 5-53).

Regarding claim 6, Gurantz in view of Sambamurthy discloses wherein the packet communication utilizes formatting that includes a preamble; and a packet of data (Sambamurthy, Fig. 1B, 5A, col. col. 5, lines 60-col. 6, line 12, col. 22, lines 5-53).

Regarding claim 7, Gurantz in view of Sambamurthy discloses wherein the packet communications includes multiple packets types chosen from the group

consisting of: probe packet; robust packet; and **data packet** (Sambamurthy, Fig. 1B, 5A, and 13, col. 22, lines 5-53, col. 32, lines 27-67, col. 33, lines 1-11).

Regarding claim 8, Gurantz in view of Sambamurthy discloses wherein the packet types include packet properties and wherein the transmitter (para. 47 and 53) is capable of changing the packet properties of the packet types on a packet-by-packet basis (Sambamurthy, Fig. 1B, 5A, and 13, col. 22, lines 5-53, col. 32, lines 27-67, col. 33, lines 1-11).

Regarding claim 10, Gurantz in view of Sambamurthy discloses wherein the scrambling formatting includes Reed Solomon ("RS") encoding (Gurantz, para. 53).

Regarding claim 11, Gurantz in view of Sambamurthy discloses wherein the packet is padded to include an integral number of similar size and coding type RS codewords (Gurantz, para. 53, Sambamurthy, Fig. 1B, 5A, and 13, col. 22, lines 5-53, col. 32, lines 27-67, col. 33, lines 1-11).

Regarding claim 14, Gurantz in view of Sambamurthy discloses wherein the transmitter utilizes orthogonal frequency division multiplexing ("OFDM") modulation (Gurantz para. 46-49, para. 52-55).

Regarding claim 16, Gurantz in view of Sambamurthy discloses wherein the pre-coder utilizes orthogonal frequency division multiplexing ("OFDM") bit-loading (Gurantz para. 46-49, para. 52-55).

Regarding claim 17, Gurantz in view of Sambamurthy discloses wherein the formatting utilizes scrambling (Gurantz para. 46-49, para. 52-55, OFDM frequency bins scrambling).

Regarding claim 18, Gurantz in view of Sambamurthy discloses wherein the scrambling is byte scrambling (Gurantz para. 46-49, para. 52-55, OFDM frequency bins scrambling).

Regarding claim 19, Gurantz in view of Sambamurthy discloses wherein the scrambling is OFDM bin scrambling (Gurantz para. 46-49, para. 52-55, OFDM frequency bins scrambling).

Regarding claim 20, Gurantz in view of Sambamurthy discloses wherein the transmitter utilizes a modulation type

on each of its subcarriers chosen from the group consisting of: bipolar phase shift keying ("BPSK"); quadrature phase shift keying ("QPSK"); 8 quadrature amplitude modulation ("QAM"); 16 QAM; 32 QAM; 64 QAM; 128 QAM; and 256 QAM (Gurantz para. 49-50).

Regarding claim 21, Gurantz in view of Sambamurthy discloses wherein the modulation type is obtained from a translation table that maps data to waveform data (Gurantz para. 47-49, IDFT generates the OFDM waveforms data).

Regarding claim 22, Gurantz in view of Sambamurthy discloses wherein an amplitude factor is applied to the various modulation types (Gurantz para. 47-49).

Regarding claim 23, Gurantz in view of Sambamurthy discloses wherein the transmitter is capable of producing and transmitting a probe signal to the at least one node (Gurantz para. 20, the modem has a transmitter capable of sending a probe signal during the communication with other within LAN).

Regarding claim 24, Gurantz in view of Sambamurthy discloses wherein the transmitter wherein the transmitter is capable of producing a robust signal that includes redundant, repetitious subcarriers (Gurantz para. 20, para. 49-53, the modem has a transmitter capable of producing a probe signal during the communication with other within LAN by using the method of OFDM, and in the process the OFDM will create multiple subcarrier representing by 1 or 0, therefore subcarrier 1 or 0 will repeat during OFDM process).

Regarding claim 25, Gurantz in view of Sambamurthy discloses wherein the transmitter transmits robust repetitious subcarriers according to a predetermined format (Gurantz para. 20, para. 49-53, the modem has a transmitter capable of producing a probe signal during the communication with other within LAN by using the method of OFDM format, and in the process the OFDM will create multiple subcarrier representing by 1 or 0, therefore subcarrier 1 or 0 will repeat during OFDM process, finally, the transmitter transmits the OFDM signal to LAN).

Regarding claim 27, Gurantz discloses all limitation of claim 26. Gurantz further discloses utilizing communication to transmit the communication data to communicate to the at least one node (para. 20, para. 38-39, para. 49-53).

Gurantz does not explicitly disclose utilizing [burst] communication.

Sambamurthy teaches [utilizing] burst [communication] (col. 21, line 23, col. 25, line 66-col. 26, line 10).

It would be obvious to one of ordinary in the art at the time of invention to modify Gurantz to include [utilizing] burst [communication], as taught by Sambamurthy, in order to improve the data communication.

Regarding claim 28, Gurantz in view of Sambamurthy discloses wherein utilizing burst communication includes utilizing packet communication to communicate to the at least one node (Gurantz, Fig. 2, para. 20, Sambamurthy,

col. 21, line 23, col. 25, line 66-col. 26, line 10 , abstract, Fig. 1B, Fig. 5A, col. 5, lines 60-col. 6, line 12, col. 22, lines 5-53).

Regarding claim 29, Gurantz in view of Sambamurthy discloses wherein the packet communication utilizes formatting information (Gurantz, para. 38-39, para. 49-53, Sambamurthy, Fig. 1B, Fig. 5A, col. 5, lines 60-col. 6, line 12, col. 22, lines 5-53).

Regarding claim 30, the method claim is met by the rejection of claim 6.

Regarding claim 31, Gurantz in view of Sambamurthy discloses wherein the preamble includes preamble data, and wherein the transmitter is capable of changing the properties of the preamble data on a packet-by-packet basis (Gurantz, para. 20, para. 49-53, Sambamurthy, Fig. 1B, Fig. 5A, col. 5, lines 60-col. 6, line 12, col. 22, lines 5-53).

Regarding claim 32, the method claim is met by the rejection of claim 16.

Regarding claim 33, the method claim is met by the rejection of claim 17.

Regarding claim 34, the method claim is met by the rejection of claim 18.

5. Claims 9, 12, and 35 are rejected under 35 U.S.C. 103(a) as being unpatentable over Gurantz in view of Sambamurthy and further in view of Kim (US 2004/0170157 A1).

Regarding claim 9, Gurantz in view of Sambamurthy discloses all limitation of claim 6. Gurantz in view of Sambamurthy further discloses providing conditionally access to the data packets (para. 42).

Gurantz in view of Sambamurthy does not explicitly disclose wherein the formatting includes packet encryption.

Kim teaches wherein the formatting includes packet encryption (para. 8, para. 12).

It would be obvious to one of ordinary in the art at the time of invention to modify Gurantz in view of Sambamurthy to include wherein the formatting includes packet encryption, as taught by Kim, in order to protect the data packet from unauthorized usage.

Regarding claim 12, the instant claim is analyzed with respect to claim 9.

Regarding claim 35, the method claim is met by the rejection of claim 9.

6. Claim 13 and 37 is rejected under 35 U.S.C. 103(a) as being unpatentable over Gurantz in view of Sambamurthy and further in view of Kim (US 2004/0170157 A1) and further in view of Fortenberry (6,005,939).

Regarding claim 13, Gurantz in view of Sambamurthy and further in view of Kim discloses all limitation of claim 12.

Gurantz in view of Sambamurthy and further in view of Kim does not explicitly discloses [wherein the encryption utilizes] Date Encryption Standard ("DES").

Fortenberry teaches [wherein the encryption utilizes] Date Encryption Standard ("DES") (col. 9, lines 43-47).

It would be obvious to one of ordinary in the art at the time of invention to modify Gurantz in view of Sambamurthy and further in view of Kimto include wherein the encryption utilizes] Date Encryption Standard ("DES"), as taught by Fortenberry, in order to standardize the encryption method by using the industry wide know Encryption method in DES (col. 9, lines 43-47).

Regarding claim 37, the method claim is met by the rejection of claim 13.

7. Claims 15 is rejected under 35 U.S.C. 103(a) as being unpatentable over Gurantz in view of Youge (6,522,650 B1).

Regarding claim 15, Gurantz discloses all limitation of claim 14, and further discloses wherein the transmitter utilizes OFDM applications.

Gurantz does not explicitly disclose [wherein the transmitter] utilizes padding [to utilize an integral number of OFDM symbols].

Youge teaches [wherein the transmitter] utilizes padding [to utilize an integral number of OFDM symbols] (Fig. 3, el. 114, col. 8, lines 22-39).

It would be obvious to one of ordinary in the art at the time of invention to modify Gurantz to include [wherein the transmitter] utilizes padding [to utilize an integral number of OFDM symbols], as taught by Youge, in order to provide a separation between two data block and indicates the ending of one data block.

8. Claim 45 is rejected under 35 U.S.C. 103(a) as being unpatentable over Sambammurthy in view of Gurantz.

Regarding claim 45, Sambammurthy discloses a physical layer transmitter capable of transmitting packets to a plurality of nodes in a broadband cable network ("BCN") (Fig. 1 and 2, abstract, col. 2, lines 1-21), the transmitter comprising:

a Media Access Controller ("MAC") subsystem (el. 14b, el. 104) capable of providing data and control packets for transmission within the network (Fig. 1A and 2, col. 2, line 13- 33, col. 4, line 65-col. 5, line 67, col. 22, line 1-53);

a modem subsystem in signal communication with the MAC subsystem, the Modem subsystem capable of receiving the data and control packets from the MAC subsystem and appending control information to the data and control packets (Fig. 1A and 2, col. 2, line 13- 33, col. 4, line 65-col. 5, line 67, col. 11, lines 13-col. 13, line 67, col. 22, line 1-53, modem refers to Transmit functionality (el. 110, el. 118) component and receive functionality component (el. 112, el. 120) in communication with the network bus interface controller); and

a subsystem in signal communication with the modem subsystem, and capable of receiving the data and control packets from the modem subsystem (Fig. 1A and 2, col. 2, line 13- 33, col. 4, line 65-col. 5, line 67, col. 11, lines 13-col. 13, line 67, Supermac management (el. 117) is in data communication with el. 110, 112, 118, and 120).

Sambammurthy does not explicitly discloses data transmission within the BCN (broadband cable network), and a [RF] subsystem in signal communication with the modem subsystem and upconverting the data and control packets received from the modem subsystem.

Gurantz teaches data transmission within the BCN (broadband cable network) (para. 12-13, para. 20),

and a RF subsystem in signal communication with the modem subsystem and upconverting the data and control packets received from the modem subsystem (Fig. 2, para. 20, para. 46-53, the subsystem uses OFDM to convert the receive data packets from the receiving component of the modem).

It would be obvious to one of ordinary in the art at the time of invention to modify Sambammurthy to include discloses data transmission within the BCN (broadband cable network), and a RF subsystem in signal communication with the modem subsystem and upconverting the data and control packets received from the modem subsystem, as taught by Gurantz, in order to apply the industry wide know method (OFDM) to better processing the data (para. 52-53).

Conclusion

Any inquiry concerning this communication or earlier communications from the examiner should be directed to CAI CHEN whose telephone number is (571)270-5679. The examiner can normally be reached on 7:30 am to 4:30 pm.

If attempts to reach the examiner by telephone are unsuccessful, the examiner's supervisor, Brian Pendleton can be reached on 571-272-7527. The fax phone number for the organization where this application or proceeding is assigned is 571-273-8300.

Information regarding the status of an application may be obtained from the Patent Application Information Retrieval (PAIR) system. Status information for published applications may be obtained from either Private PAIR or Public PAIR. Status information for unpublished applications is available through Private PAIR only. For more information about the PAIR system, see http://pair-direct.uspto.gov. Should you have questions on access to the Private PAIR system, contact the Electronic Business Center (EBC) at 866-217-9197 (toll-free). If you would like assistance from a USPTO Customer Service Representative or access to the automated information system, call 800-786-9199 (IN USA OR CANADA) or 571-272-1000.

C. C.
Examiner, Art Unit 2425

/Brian T. Pendleton/

Supervisory Patent Examiner, Art Unit 2425

Notice of References Cited	Application/Control No. 11/241,748	Applicant(s)/Patent Under Reexamination MONK ET AL.	
	Examiner CAI CHEN	Art Unit 2425	Page 1 of 1

U.S. PATENT DOCUMENTS

*		Document Number Country Code-Number-Kind Code	Date MM-YYYY	Name	Classification
*	A	US-2004/0170157	09-2004	Kim et al.	370/349
*	B	US-6,005,939	12-1999	Fortenberry et al.	705/76
*	C	US-2002/0166124	11-2002	Gurantz et al.	725/78
*	D	US-6,085,248	07-2000	Sambamurthy et al.	709/229
*	E	US-6,522,650	02-2003	Yonge et al.	370/390
	F	US-			
	G	US-			
	H	US-			
	I	US-			
	J	US-			
	K	US-			
	L	US-			
	M	US-			

FOREIGN PATENT DOCUMENTS

*		Document Number Country Code-Number-Kind Code	Date MM-YYYY	Country	Name	Classification
	N					
	O					
	P					
	Q					
	R					
	S					
	T					

NON-PATENT DOCUMENTS

*		Include as applicable: Author, Title Date, Publisher, Edition or Volume, Pertinent Pages)
	U	
	V	
	W	
	X	

*A copy of this reference is not being furnished with this Office action. (See MPEP § 707.05(a).)
Dates in MM-YYYY format are publication dates. Classifications may be US or foreign.

Index of Claims	Application/Control No.	Applicant(s)/Patent Under Reexamination
	11241748	MONK ET AL.
	Examiner	**Art Unit**
	CAI CHEN	2425

✓	Rejected	-	Cancelled	N	Non-Elected	A	Appeal
=	Allowed	÷	Restricted	I	Interference	O	Objected

☐ Claims renumbered in the same order as presented by applicant ☐ CPA ☐ T.D. ☐ R.1.47

CLAIM		DATE								
Final	Original	03/20/2009								
	1	✓								
	2	✓								
	3	✓								
	4	✓								
	5	✓								
	6	✓								
	7	✓								
	8	✓								
	9	✓								
	10	✓								
	11	✓								
	12	✓								
	13	✓								
	14	✓								
	15	✓								
	16	✓								
	17	✓								
	18	✓								
	19	✓								
	20	✓								
	21	✓								
	22	✓								
	23	✓								
	24	✓								
	25	✓								
	26	✓								
	27	✓								
	28	✓								
	29	✓								
	30	✓								
	31	✓								
	32	✓								
	33	✓								
	34	✓								
	35	✓								
	36	✓								

Index of Claims	Application/Control No.	Applicant(s)/Patent Under Reexamination
	11241748	MONK ET AL.
	Examiner	**Art Unit**
	CAI CHEN	2425

✓	Rejected	-	Cancelled	N	Non-Elected	A	Appeal
=	Allowed	÷	Restricted	I	Interference	O	Objected

☐ Claims renumbered in the same order as presented by applicant ☐ CPA ☐ T.D. ☐ R.1.47

CLAIM		DATE								
Final	Original	03/20/2009								
	37	✓								
	38	✓								
	39	✓								
	40	✓								
	41	✓								
	42	✓								
	43	✓								
	44	✓								
	45	✓								

Search Notes	Application/Control No.	Applicant(s)/Patent Under Reexamination
	11241748	MONK ET AL.
	Examiner	**Art Unit**
	CAI CHEN	2425

SEARCHED			
Class	**Subclass**	**Date**	**Examiner**

SEARCH NOTES		
Search Notes	**Date**	**Examiner**
Inventor Searches were performed in East	3/20/2009	cc
Class 725 and 370 are text searches	3/20/2009	cc

INTERFERENCE SEARCH			
Class	**Subclass**	**Date**	**Examiner**

/C. C./ Examiner.Art Unit 2425	

UNITED STATES PATENT AND TRADEMARK OFFICE

UNITED STATES DEPARTMENT OF COMMERCE
United States Patent and Trademark Office
Address: COMMISSIONER FOR PATENTS
P.O. Box 1450
Alexandria, Virginia 22313-1450
www.uspto.gov

BIB DATA SHEET

CONFIRMATION NO. 2829

SERIAL NUMBER	FILING or 371(c) DATE	CLASS	GROUP ART UNIT	ATTORNEY DOCKET NO.
11/241,748	09/29/2005 **RULE**	370	2425	EC04003USU

APPLICANTS

Anton Monk, San Diego, CA;
Ron Porat, San Diego, CA;
Wee-Peng Goh, Murrieta, CA;
Magnus Berggren, San Diego, CA;
Ron Lee, San Diego, CA;
Edward Warner, San Diego, CA;
Brett Bernath, San Diego, CA;
Yusuf Ozturk, San Diego, CA;

**** CONTINUING DATA ***************************

This appln claims benefit of 60/633,091 12/02/2004
and claims benefit of 60/632,797 12/02/2004
and claims benefit of 60/633,002 12/02/2004
and claims benefit of 60/632,856 12/02/2004

**** FOREIGN APPLICATIONS ***************************

**** IF REQUIRED, FOREIGN FILING LICENSE GRANTED ****

10/26/2005

Foreign Priority claimed ☐ Yes ☑ No 35 USC 119(a-d) conditions met ☐ Yes ☑ No Verified and Acknowledged /CAI Y CHEN/ Examiner's Signature	☐ Met after Allowance Initials	STATE OR COUNTRY	SHEETS DRAWINGS	TOTAL CLAIMS	INDEPENDENT CLAIMS
		CA	25	45	3

ADDRESS

The Eclipse Group LLP
10605 Balboa Blvd
Suite 300
Granada Hills, CA 91344
UNITED STATES

TITLE

Physical layer transmitter for use in a broadband local area network

FILING FEE RECEIVED 2380	FEES: Authority has been given in Paper No._____ to charge/credit DEPOSIT ACCOUNT No._____ for following:	☐ All Fees ☐ 1.16 Fees (Filing) ☐ 1.17 Fees (Processing Ext. of time) ☐ 1.18 Fees (Issue) ☐ Other _____ ☐ Credit

BIB (Rev. 05/07).

EAST Search History

Ref #	Hits	Search Query	DBs	Default Operator	Plurals	Time Stamp
L1	1	"20020166124".pn. and robust$4	US-PGPUB; USPAT; USOCR; FPRS; EPO; JPO; DERWENT; IBM_TDB	ADJ	OFF	2009/03/20 09:05
L3	3964	transmitter with signal with (redunant or repeat$3 or repetitious)	US-PGPUB; USPAT; USOCR; FPRS; EPO; JPO; DERWENT; IBM_TDB	ADJ	OFF	2009/03/20 09:10
L4	141	physical layer transmitter	US-PGPUB; USPAT; USOCR; FPRS; EPO; JPO; DERWENT; IBM_TDB	ADJ	OFF	2009/03/20 09:10
L5	1	3 and L4	US-PGPUB; USPAT; USOCR; FPRS; EPO; JPO; DERWENT; IBM_TDB	ADJ	OFF	2009/03/20 09:10
L6	518	("725"/$.ccls. or "370"/$.ccls.) and 3	US-PGPUB; USPAT; USOCR; FPRS; EPO; JPO; DERWENT; IBM_TDB	ADJ	OFF	2009/03/20 09:12
L7	20	transmitter with signal with (redunant or repetitious)	US-PGPUB; USPAT; USOCR; FPRS; EPO; JPO; DERWENT; IBM_TDB	ADJ	OFF	2009/03/20 09:13
L8	20	transmitter with (signal or carrier) with (redunant or repetitious)	US-PGPUB; USPAT; USOCR; FPRS; EPO; JPO; DERWENT; IBM_TDB	ADJ	OFF	2009/03/20 09:16

L9	46	transmit$4 with (signal or carrier) with (redunant or repetitious)	US-PGPUB; USPAT; USOCR; FPRS; EPO; JPO; DERWENT; IBM_TDB	ADJ	OFF	2009/03/20 09:16
L10	948	robust signal	US-PGPUB; USPAT; USOCR; FPRS; EPO; JPO; DERWENT; IBM_TDB	ADJ	OFF	2009/03/20 09:23
L14	6	transmitter with signal with carousel	US-PGPUB; USPAT; USOCR; FPRS; EPO; JPO; DERWENT; IBM_TDB	ADJ	OFF	2009/03/20 09:25
L15	1	"6085248".pn. and redundan$3	US-PGPUB; USPAT; USOCR; FPRS; EPO; JPO; DERWENT; IBM_TDB	ADJ	OFF	2009/03/20 09:34
L16	1	"6085248".pn. and burst$3	US-PGPUB; USPAT; USOCR; FPRS; EPO; JPO; DERWENT; IBM_TDB	ADJ	OFF	2009/03/20 10:18
L19	6585	probe signal	US-PGPUB; USPAT; USOCR; FPRS; EPO; JPO; DERWENT; IBM_TDB	ADJ	OFF	2009/03/20 11:57
L25	118	radio frequency subsystem	US-PGPUB; USPAT; USOCR; FPRS; EPO; JPO; DERWENT; IBM_TDB	ADJ	OFF	2009/03/20 13:41
L26	8	radio frequency subsystem and mac	US-PGPUB; USPAT; USOCR; FPRS; EPO; JPO; DERWENT; IBM_TDB	ADJ	OFF	2009/03/20 13:41

L27	1	radio frequency subsystem with modem	US-PGPUB; USPAT; USOCR; FPRS; EPO; JPO; DERWENT; IBM_TDB	ADJ	OFF	2009/03/20 13:43
L28	2	"20020166124".pn. and broadband	US-PGPUB; USPAT; USOCR; FPRS; EPO; JPO; DERWENT; IBM_TDB	ADJ	OFF	2009/03/20 13:53
L29	1	"20020166124".pn. and broadband network	US-PGPUB; USPAT; USOCR; FPRS; EPO; JPO; DERWENT; IBM_TDB	ADJ	OFF	2009/03/20 13:53
S1	1	"6481013".pn.	USPAT	OR	OFF	2009/03/18 14:11
S2	2	"6481013".pn.	US-PGPUB; USPAT; USOCR; FPRS; EPO; JPO; DERWENT; IBM_TDB	ADJ	OFF	2009/03/18 14:12
S3	9	monk-anton.inv.	US-PGPUB; USPAT; USOCR; FPRS; EPO; JPO; DERWENT; IBM_TDB	ADJ	OFF	2009/03/18 14:17
S4	92	modem and tdma and tdd and packet and transmitter and node and preamble	US-PGPUB; USPAT; USOCR; FPRS; EPO; JPO; DERWENT; IBM_TDB	ADJ	OFF	2009/03/18 15:16
S5	5	reed solomon encod$3 and S4	US-PGPUB; USPAT; USOCR; FPRS; EPO; JPO; DERWENT; IBM_TDB	ADJ	OFF	2009/03/18 15:16
S6	291	modem with transmitter with baseband	US-PGPUB; USPAT; USOCR; FPRS; EPO; JPO; DERWENT; IBM_TDB	ADJ	OFF	2009/03/18 15:18

S12	141	physical layer transmitter	US-PGPUB; USPAT; USOCR; FPRS; EPO; JPO; DERWENT; IBM_TDB	ADJ	OFF	2009/03/18 15:36
S13	76	physical layer transmitter and mac	US-PGPUB; USPAT; USOCR; FPRS; EPO; JPO; DERWENT; IBM_TDB	ADJ	OFF	2009/03/18 15:36
S14	76	physical layer transmitter and mac	US-PGPUB; USPAT; USOCR; FPRS; EPO; JPO; DERWENT; IBM_TDB	ADJ	OFF	2009/03/19 10:14
S15	29	S14 and modem	US-PGPUB; USPAT; USOCR; FPRS; EPO; JPO; DERWENT; IBM_TDB	ADJ	OFF	2009/03/19 10:14
S16	2643	pre$1coder	US-PGPUB; USPAT; USOCR; FPRS; EPO; JPO; DERWENT; IBM_TDB	ADJ	OFF	2009/03/19 13:17
S17	76	physical layer transmitter and mac	US-PGPUB; USPAT; USOCR; FPRS; EPO; JPO; DERWENT; IBM_TDB	ADJ	OFF	2009/03/19 13:17
S19	9	monk-anton.inv.	US-PGPUB; USPAT; USOCR; FPRS; EPO; JPO; DERWENT; IBM_TDB	ADJ	OFF	2009/03/19 13:17
S26	0	S17 and (packet with encrypt$3)	US-PGPUB; USPAT; USOCR; FPRS; EPO; JPO; DERWENT; IBM_TDB	ADJ	OFF	2009/03/19 14:58

S27	4	S17 and (data with encrypt$3)	US-PGPUB; USPAT; USOCR; FPRS; EPO; JPO; DERWENT; IBM_TDB	ADJ	OFF	2009/03/19 14:58
S30	0	physical layer transmitter and date encryption standard	US-PGPUB; USPAT; USOCR; FPRS; EPO; JPO; DERWENT; IBM_TDB	ADJ	OFF	2009/03/19 15:38
S31	28	date encryption standard	US-PGPUB; USPAT; USOCR; FPRS; EPO; JPO; DERWENT; IBM_TDB	ADJ	OFF	2009/03/19 15:38
S32	0	"6085248".pn. and similar and (rs or reed solomon)	US-PGPUB; USPAT; USOCR; FPRS; EPO; JPO; DERWENT; IBM_TDB	ADJ	OFF	2009/03/19 16:19
S33	0	"6085248".pn. and (rs or reed solomon)	US-PGPUB; USPAT; USOCR; FPRS; EPO; JPO; DERWENT; IBM_TDB	ADJ	OFF	2009/03/19 16:19
S34	130	padding with ofdm	US-PGPUB; USPAT; USOCR; FPRS; EPO; JPO; DERWENT; IBM_TDB	ADJ	OFF	2009/03/19 16:38
S35	0	S17 and (S34)	US-PGPUB; USPAT; USOCR; FPRS; EPO; JPO; DERWENT; IBM_TDB	ADJ	OFF	2009/03/19 16:38
S36	0	"6085248".pn. and (padding with ofdm)	US-PGPUB; USPAT; USOCR; FPRS; EPO; JPO; DERWENT; IBM_TDB	ADJ	OFF	2009/03/19 16:41

3/20/2009 2:48:51 PM

C:\ Documents and Settings\ cchen3\ My Documents\ EAST\ Workspaces\ 11241748 physical layer transmitter.wsp

IN THE UNITED STATES PATENT AND TRADEMARK OFFICE

In Re Application of:
Monk, et al.

Serial No.: 11/241,748

Filed: 29 September 2005

For: Physical layer transmitter for use in a broadband local area network

Group Art Unit: 2425

Confirmation No. 2829

AMENDMENT

Mail Stop Amendment
Commissioner for Patents
P.O. Box 1450
Alexandria, VA 22313-1450

Attention: **Cai Y. Chen**
Examiner

Dear Sir:

In response to the Office Action of April 1, 2009, please note the following remarks and comments:

Amendments to the Claims begin on page 2 of this paper.

Remarks/Comments begin on page 7 of this paper.

I hereby certify that this correspondence is being electronically deposited with the Commissioner for Patents through the USPTO electronic filing system, on:

July 1, 2009
(Date of Deposit)

Tim Ellis
(Name of Person Making Deposit)

/Tim Ellis/
(Signature)

AMENDMENTS TO THE CLAIMS:

1. (Currently Amended) A modem for communication to at least one node across at least one channel of a ~~building~~ coaxial network, the modem comprising:

a transmitter; and

a ~~pre-coder~~ MAC layer in signal communication with the transmitter,

wherein the ~~pre-coder~~ MAC layer utilizes ~~adaptive communication techniques to communicate to the~~ at least one probe packet to characterize the at least one channel to the at least one node and optimizes at least one transmit packet based upon the characterization of the channel, and

wherein the transmitter communicates ~~with~~ the at least one ~~node utilizing~~ transmit packet ~~communications using Time Division Multiple Access ("TDMA")~~.

2. (Original) The modem of claim 1, wherein the transmitter is a baseband transmitter.

3. (Original) The modem of claim 1, wherein the transmitter is a Radio Frequency ("RF") transmitter.

4. (Original) The modem of claim 1, wherein the packet communication utilizes services.

5. (Original) The modem of claim 1, wherein the transmitter communicates with at least one node utilizing packet communications using Time Division Duplex ("TDD").

6. (Original) The modem of claim 5, wherein the packet communication utilizes formatting that includes

a preamble; and

a packet of data.

7. (Currently Amended) The modem of claim 6, wherein the packet communications includes ~~multiple packets types chosen from the group consisting of:~~

~~probe packet;~~

<u>at least one</u> robust packet~~; and~~

~~data packet~~.

8. (Cancelled)

9. (Original) The modem of claim 6, wherein the formatting includes packet encryption.

10. (Original) The modem of claim 6, wherein the scrambling formatting includes Reed Solomon ("RS") encoding.

11. (Original) The modem of claim 10, wherein the packet is padded to include an integral number of similar size and coding type RS codewords.

12. (Original) The modem of claim 6, wherein the formatting utilizes packet encryption.

13. (Currently Amended) The modem of claim [[13]] 12, wherein the encryption utilizes Date Encryption Standard ("DES").

14. (Original) The modem of claim 1, wherein the transmitter utilizes orthogonal frequency division multiplexing ("OFDM") modulation.

15. (Original) The modem of claim 14, wherein the transmitter utilizes padding to utilize an integral number of OFDM symbols.

16. (Currently Amended) The modem of claim 1, wherein the ~~pre-coder~~ MAC layer utilizes orthogonal frequency division multiplexing ("OFDM") bit-loading.

17. (Original) The modem of claim 16, wherein the formatting utilizes scrambling.

18. (Original) The modem of claim 17, wherein the scrambling is byte scrambling.

19. (Original) The modem of claim 18, wherein the scrambling is OFDM bin scrambling.

20. (Original) The modem of claim 14 wherein the transmitter utilizes a modulation type on each of its subcarriers chosen from the group consisting of:

bipolar phase shift keying ("BPSK");

quadrature phase shift keying ("QPSK");

8 quadrature amplitude modulation ("QAM");

16 QAM;

32 QAM;

64 QAM;

128 QAM; and

256 QAM.

21. (Original) The modem of claim 20, wherein the modulation type is obtained from a translation table that maps data to waveform data.

22. (Original) The modem of claim 21, wherein an amplitude factor is applied to the various modulation types.

23. (Original) The modem of claim 1, wherein the transmitter is capable of producing and transmitting a probe signal to the at least one node.

24. (Original) The modem of claim 1, wherein the transmitter is capable of producing a robust signal that includes redundant, repetitious subcarriers.

25. (Original) The modem of claim 24, wherein the transmitter transmits robust repetitious subcarriers according to a predetermined format.

26-45. (Cancelled)

REMARKS/ARGUMENTS

Claims 1-45 were pending in the application. Claims 1-45 were rejected (note that the Examiner indicated in the office action cover sheet that Claim 13 was objected to, however, as noted below, Claim 13 was rejected). Claims 1, 7, 13 and 16 have been amended herein. Claims 8 and 26-45 have been cancelled. Accordingly, Claims 1-7, 9-25 are currently pending. Applicants respectfully request reconsideration and allowance of all pending claims.

Discussion of Rejections Under 35 U.S.C. §101

The Examiner has rejected Claims 26-44 as not falling within one of the statutory categories of invention. Applicants have cancelled Claims 26-44, thus the Examiner's rejections of Claims 26-44 are now moot.

Discussion of Objections to the Specification

The Examiner objected to the specification as failing to provide proper antecedent basis for the claimed subject matter. In particular, the Examiner contends that the claim limitation "pre-coder" of Claim 1 was never defined in the specification. Applicants have amended Claim 1 and Claim 16 to remove the recitation of a "pre-coder" and have rather recited a "MAC layer" as disclosed at paragraph 53 of the originally filed specification.

The Examiner further objected to the specification as failing to provide proper antecedent basis for the claim limitation "Radio Frequency Subsystem" as recited in Claim 45. Applicant's respectfully direct the Examiner's attention to paragraph 55 of the original specification which provides the antecedent basis for an "RF Subsystem". However, in light of the fact that Claim 45 has been cancelled, the Examiner's objection to the Specification for not supporting the limitation of Claim 45 is now moot.

Discussion of Objections to the Claims

The Examiner has objected to Claim 13 as depending from itself. Applicants have amended Claim 13 to depend from Claim 12.

Discussion of Rejections Under 35 U.S.C. §102

Claims 26 and 37-44 were rejected under 35 U.S.C. 102 (b) as being anticipated by Gurantz (US 2002/0166124 A1). As noted above, Applicants have cancelled Claims 26-44, accordingly, the rejections of Claims 26 and 37-44 are now moot.

Discussion of Rejections Under 35 U.S.C. §103

Claims 1-8, 10-11, 14, 16-25, and 27-34 were rejected under 35 U.S.C. 103(a) as being unpatentable over Gurantz (US 2002/0166124 A1) in view of Sambamurthy (6,085,248).

Applicants have amended Claim 1. Applicants thus respectfully traverse all rejections and objections to Claim 1 and the claims that depend therefrom. In particular, Applicants have amended Claim 1 to clarify the term "pre-coder" by noting the that the pre-coding is done by the MAC layer. Applicants have also amended Claim 1 to recite the disclosed pre-coding functions of the MAC layer of generating a probe that can be used to characterize a channel. The channel exists between the node in which the MAC layer resides and another node of a communication network. The characterization is then used to optimize the transmitted packets based on the characteristics of the channel. Applicants contend that nothing in any of the references cited by the Examiner teaches or suggests a MAC layer that characterizes a channel and optimizes the channel between a node that includes the MAC layer and another node of a communication network. Therefore, Applicants contend that Claim 1 is in condition for allowance.

Applicants further contend that in light of the amendments made to Claim 1, each of those claims that depend therefrom is also in condition for allowance.

With particular regard to Claim 7, the Examiner contends that Gurantz in view of Sambamurthy discloses the packet communications includes multiple packet types chosen from the group consisting of: probe packet; robust packet; and data packet (Sambamurthy, Fig. 1B, 5A, and 13, col. 22, lines 5-53, col. 32, lines 27-67, col. 33, lines 1-11). Applicants have amended Claim 7 to recite that the packet communications include robust packets. There is nothing in either Gurantz or Sambamurthy that teaches or suggests the use of a robust packet. The Examiner points to the particular columns and lines in Sambamurthy,

however, there is nothing disclosed by Sambamurthy at those points that teaches or suggests the use of robust packets. Rather, Sambamurthy discloses that the packets have parallel in-packet programmability. Sambamurthy states that "[b]ecause there is a separate data processing path and a separate control processing path, the data processing being performed on a particular packet that is being passed through the flow based MAC 150, may be modified while the packet is being transmitted." (col. 22, lines 11, et al.). The remainder of the passages cited by the Examiner are similar in their discussion of the flexibility of the processing of the packets, but there is no mention of the use of more robust packets. Accordingly, applicants respectfully traverse the Examiner's rejection of Claim 7.

It should be noted that the specification of the present application discloses use of robust packets in Fig. 7 as well as the text provided at paragraph [0050] and [0064], et al.

The requirement to establish a *prima facie* case of obviousness requires that the prior art reference, or references when combined, must provide all of the claim limitations and must establish that it would be obvious for one of ordinary skill in the art to combine the references in a way that would successfully result in the claimed invention. In addition to the reasons stated above with respect to Claim 1, from which Claim 7 depends, since none of the reference recited by the Examiner teach or suggest the element the use of packet communication including multiple packets that consist of robust packets, applicants respectfully traverse the Examiner's rejection of Claim 7.

The Examiner also rejected Claims 9, 12, and 35 under 35 U.S.C. 103(a) as being unpatentable over Gurantz in view of Sambamurthy and further in view of Kim (US 2004/0170157 A1). Applicants respectfully traverse the Examiner's rejection of Claims 9 and 12 for the reasons stated above with respect to Claim 1 and in light of the fact that Claims 9 and 12 depend from Claim 1. Claim 35 has been cancelled and therefore the Examiner's rejection of Claim 35 is now moot.

The Examiner also rejected Claims 13 and 37 under 35 U.S.C. 103(a) as being unpatentable over Gurantz in view of Sambamurthy and further in view of Kim (US 2004/0170157 A1) and further in view of Fortenberry (6,005,939). Applicants respectfully traverse the Examiner's rejection of Claim 13 for the reasons stated above with regard to

Claim 1. In addition, Claim 37 has been cancelled and therefore, the Examiner's rejection of Claim 37 is now moot.

The Examiner also rejected Claim 15 under 35 U.S.C. 103(a) as being unpatentable over Gurantz in view of Youge (6,522,650 81). Applicants respectfully traverse the Examiner's rejection of Claim 15 for the reasons stated above with regard to Claim 1.

The Examiner also rejected Claim 45 under 35 U.S.C. 103(a) as being unpatentable over Sambamurthy in view of Gurantz. Applicants have cancelled Claim 45. Accordingly, the Examiner's rejection of Claim 45 is now moot.

CONCLUSION

Applicants believe that all claims pending in the application are allowable. Applicants therefore respectfully request that a timely Notice of Allowance be issued in this case.

This is a response to the Office Action mailed on April 1, 2009, and as such, is timely submitted.

If there are any fees due in connection with the filing of the response, please charge the fees to our Deposit Account No. 50-4613. If a fee is required for an extension of time under 37 CFR 1.136, such an extension is requested and the fee should also be charged to our Deposit Account.

If the Examiner believes a telephone conference would expedite prosecution of this application, please telephone the undersigned.

Respectfully submitted,

Dated: July 1, 2009

By: /Bruce W. Greenhaus/
Bruce W. Greenhaus
Attorney for Applicants
Registration No. 37,339

Entropic Communications, Inc.
6290 Sequence Drive
San Diego, California 92121
Telephone: (619) 980-2612
e-mail address: patentteam@entropic.com

Electronic Acknowledgement Receipt

EFS ID:	5624772
Application Number:	11241748
International Application Number:	
Confirmation Number:	2829
Title of Invention:	Physical layer transmitter for use in a broadband local area network
First Named Inventor/Applicant Name:	Anton Monk
Customer Number:	78271
Filer:	Bruce Wayne Greenhaus/Tim Ellis
Filer Authorized By:	Bruce Wayne Greenhaus
Attorney Docket Number:	EC04003USU
Receipt Date:	01-JUL-2009
Filing Date:	29-SEP-2005
Time Stamp:	13:35:42
Application Type:	Utility under 35 USC 111(a)

Payment information:

Submitted with Payment	no

File Listing:

Document Number	Document Description	File Name	File Size(Bytes)/ Message Digest	Multi Part /.zip	Pages (if appl.)
1		E040004USU2_OA_Response_7-1-09.pdf	130729 febdb40036faaa6ad2887b9aa242f2f741e3d900	yes	11

	Multipart Description/PDF files in .zip description		
	Document Description	**Start**	**End**
	Amendment/Req. Reconsideration-After Non-Final Reject	1	1
	Claims	2	6
	Applicant Arguments/Remarks Made in an Amendment	7	10
	Amendment/Req. Reconsideration-After Non-Final Reject	11	11
Warnings:			
Information:			
	Total Files Size (in bytes):	130729	

This Acknowledgement Receipt evidences receipt on the noted date by the USPTO of the indicated documents, characterized by the applicant, and including page counts, where applicable. It serves as evidence of receipt similar to a Post Card, as described in MPEP 503.

New Applications Under 35 U.S.C. 111
If a new application is being filed and the application includes the necessary components for a filing date (see 37 CFR 1.53(b)-(d) and MPEP 506), a Filing Receipt (37 CFR 1.54) will be issued in due course and the date shown on this Acknowledgement Receipt will establish the filing date of the application.

National Stage of an International Application under 35 U.S.C. 371
If a timely submission to enter the national stage of an international application is compliant with the conditions of 35 U.S.C. 371 and other applicable requirements a Form PCT/DO/EO/903 indicating acceptance of the application as a national stage submission under 35 U.S.C. 371 will be issued in addition to the Filing Receipt, in due course.

New International Application Filed with the USPTO as a Receiving Office
If a new international application is being filed and the international application includes the necessary components for an international filing date (see PCT Article 11 and MPEP 1810), a Notification of the International Application Number and of the International Filing Date (Form PCT/RO/105) will be issued in due course, subject to prescriptions concerning national security, and the date shown on this Acknowledgement Receipt will establish the international filing date of the application.

IN THE UNITED STATES PATENT AND TRADEMARK OFFICE

In Re Application of:
Monk, et al.

Serial No.: 11/241,748

Filed: 29 September 2005

For: Physical layer transmitter for use in a broadband local area network

Group Art Unit: 2425

Confirmation No. 2829

Information Disclosure Statement Under 37 CFR §1.97 AND §1.98

Mail Stop Amendment
Commissioner for Patents
P.O. Box 1450
Alexandria, VA 22313-1450

Attention: **Cai Y. Chen**
Examiner

Dear Sir:

The references cited on the attached form, PTO/SB/08A, are being called to the attention of the Examiner. Copies of the references are not enclosed. It is respectfully requested that the cited references be expressly considered during the prosecution of this application, and the references be made of record therein and appear among the "references cited" on any patent to issue therefrom.

I hereby certify that this correspondence is being electronically deposited with the Commissioner for Patents through the USPTO electronic filing system, on:

July 1, 2009
(Date of Deposit)

Tim Ellis
(Name of Person Making Deposit)

/Tim Ellis/
(Signature)

Also enclosed is a copy of a PTO-892 Form which was issued in corresponding U.S. application number 11/231,349, and in which these references were cited in the action dated March 3, 2009.

As provided for by 37 CFR §1.97(g) and (h), no inference should be made that the information and references cited are prior art merely because they are in this statement and no representation is being made that a search has been conducted or that this statement encompasses all the possible relevant information.

Applicant has paid fees under 37 CFR 1.17(p), via EFS-WEB, using our Deposit Account No. 50-4613. Please deduct any additional fees from, or Credit any overpayment to, the above-noted Deposit Account.

Respectfully submitted,

Dated: July 1, 2009

By: /Bruce W. Greenhaus/
Bruce W. Greenhaus
Attorney for Applicants
Registration No. 37,339

Entropic Communications, Inc.
6290 Sequence Drive
San Diego, California 92121
Telephone: (619) 980-2612
e-mail address: patentteam@entropic.com

Doc code: IDS
Doc description: Information Disclosure Statement (IDS) Filed

PTO/SB/08a (06-09)
Approved for use through 07/31/2009. OMB 0651-0031
U.S. Patent and Trademark Office; U.S. DEPARTMENT OF COMMERCE

Under the Paperwork Reduction Act of 1995, no persons are required to respond to a collection of information unless it contains a valid OMB control number.

INFORMATION DISCLOSURE STATEMENT BY APPLICANT (**Not for submission under 37 CFR 1.99)**	Application Number	11241748
	Filing Date	2005-09-29
	First Named Inventor	Anton Monk
	Art Unit	2425
	Examiner Name	Cai Y. Chen
	Attorney Docket Number	EC04003USU

U.S.PATENTS

Examiner Initial*	Cite No	Patent Number	Kind Code[1]	Issue Date	Name of Patentee or Applicant of cited Document	Pages,Columns,Lines where Relevant Passages or Relevant Figures Appear
	1	6052380	A	2000-04-18	Bell, Russell W.	
	2	7486648	B1	2009-02-03	Baranowski; Robert	

If you wish to add additional U.S. Patent citation information please click the Add button.

U.S.PATENT APPLICATION PUBLICATIONS

Examiner Initial*	Cite No	Publication Number	Kind Code[1]	Publication Date	Name of Patentee or Applicant of cited Document	Pages,Columns,Lines where Relevant Passages or Relevant Figures Appear
	1	20040174841	A1	2004-09-09	Kubler, Joseph J.	

If you wish to add additional U.S. Published Application citation information please click the Add button.

FOREIGN PATENT DOCUMENTS

Examiner Initial*	Cite No	Foreign Document Number[3]	Country Code[2] ¡	Kind Code[4]	Publication Date	Name of Patentee or Applicant of cited Document	Pages,Columns,Lines where Relevant Passages or Relevant Figures Appear	T[5]
	1							☐

If you wish to add additional Foreign Patent Document citation information please click the Add button

NON-PATENT LITERATURE DOCUMENTS

INFORMATION DISCLOSURE STATEMENT BY APPLICANT (Not for submission under 37 CFR 1.99)		
	Application Number	11241748
	Filing Date	2005-09-29
	First Named Inventor	Anton Monk
	Art Unit	2425
	Examiner Name	Cai Y. Chen
	Attorney Docket Number	EC04003USU

Examiner Initials*	Cite No	Include name of the author (in CAPITAL LETTERS), title of the article (when appropriate), title of the item (book, magazine, journal, serial, symposium, catalog, etc), date, pages(s), volume-issue number(s), publisher, city and/or country where published.	T[5]
	1		☐

If you wish to add additional non-patent literature document citation information please click the Add button

EXAMINER SIGNATURE

Examiner Signature		Date Considered	

*EXAMINER: Initial if reference considered, whether or not citation is in conformance with MPEP 609. Draw line through a citation if not in conformance and not considered. Include copy of this form with next communication to applicant.

[1] See Kind Codes of USPTO Patent Documents at www.USPTO.GOV or MPEP 901.04. [2] Enter office that issued the document, by the two-letter code (WIPO Standard ST.3). [3] For Japanese patent documents, the indication of the year of the reign of the Emperor must precede the serial number of the patent document. [4] Kind of document by the appropriate symbols as indicated on the document under WIPO Standard ST.16 if possible. [5] Applicant is to place a check mark here if English language translation is attached.

INFORMATION DISCLOSURE STATEMENT BY APPLICANT (Not for submission under 37 CFR 1.99)		
	Application Number	11241748
	Filing Date	2005-09-29
	First Named Inventor	Anton Monk
	Art Unit	2425
	Examiner Name	Cai Y. Chen
	Attorney Docket Number	EC04003USU

CERTIFICATION STATEMENT

Please see 37 CFR 1.97 and 1.98 to make the appropriate selection(s):

☐ That each item of information contained in the information disclosure statement was first cited in any communication from a foreign patent office in a counterpart foreign application not more than three months prior to the filing of the information disclosure statement. See 37 CFR 1.97(e)(1).

OR

☐ That no item of information contained in the information disclosure statement was cited in a communication from a foreign patent office in a counterpart foreign application, and, to the knowledge of the person signing the certification after making reasonable inquiry, no item of information contained in the information disclosure statement was known to any individual designated in 37 CFR 1.56(c) more than three months prior to the filing of the information disclosure statement. See 37 CFR 1.97(e)(2).

☐ See attached certification statement.

☒ Fee set forth in 37 CFR 1.17 (p) has been submitted herewith.

☐ None

SIGNATURE

A signature of the applicant or representative is required in accordance with CFR 1.33, 10.18. Please see CFR 1.4(d) for the form of the signature.

Signature	/Bruce W. Greenhaus/	Date (YYYY-MM-DD)	2009-07-01
Name/Print	Bruce W. Greenhaus	Registration Number	37339

This collection of information is required by 37 CFR 1.97 and 1.98. The information is required to obtain or retain a benefit by the public which is to file (and by the USPTO to process) an application. Confidentiality is governed by 35 U.S.C. 122 and 37 CFR 1.14. This collection is estimated to take 1 hour to complete, including gathering, preparing and submitting the completed application form to the USPTO. Time will vary depending upon the individual case. Any comments on the amount of time you require to complete this form and/or suggestions for reducing this burden, should be sent to the Chief Information Officer, U.S. Patent and Trademark Office, U.S. Department of Commerce, P.O. Box 1450, Alexandria, VA 22313-1450. DO NOT SEND FEES OR COMPLETED FORMS TO THIS ADDRESS. **SEND TO: Commissioner for Patents, P.O. Box 1450, Alexandria, VA 22313-1450.**

Privacy Act Statement

The Privacy Act of 1974 (P.L. 93-579) requires that you be given certain information in connection with your submission of the attached form related to a patent application or patent. Accordingly, pursuant to the requirements of the Act, please be advised that: (1) the general authority for the collection of this information is 35 U.S.C. 2(b)(2); (2) furnishing of the information solicited is voluntary; and (3) the principal purpose for which the information is used by the U.S. Patent and Trademark Office is to process and/or examine your submission related to a patent application or patent. If you do not furnish the requested information, the U.S. Patent and Trademark Office may not be able to process and/or examine your submission, which may result in termination of proceedings or abandonment of the application or expiration of the patent.

The information provided by you in this form will be subject to the following routine uses:

1. The information on this form will be treated confidentially to the extent allowed under the Freedom of Information Act (5 U.S.C. 552) and the Privacy Act (5 U.S.C. 552a). Records from this system of records may be disclosed to the Department of Justice to determine whether the Freedom of Information Act requires disclosure of these record s.

2. A record from this system of records may be disclosed, as a routine use, in the course of presenting evidence to a court, magistrate, or administrative tribunal, including disclosures to opposing counsel in the course of settlement negotiations.

3. A record in this system of records may be disclosed, as a routine use, to a Member of Congress submitting a request involving an individual, to whom the record pertains, when the individual has requested assistance from the Member with respect to the subject matter of the record.

4. A record in this system of records may be disclosed, as a routine use, to a contractor of the Agency having need for the information in order to perform a contract. Recipients of information shall be required to comply with the requirements of the Privacy Act of 1974, as amended, pursuant to 5 U.S.C. 552a(m).

5. A record related to an International Application filed under the Patent Cooperation Treaty in this system of records may be disclosed, as a routine use, to the International Bureau of the World Intellectual Property Organization, pursuant to the Patent Cooperation Treaty.

6. A record in this system of records may be disclosed, as a routine use, to another federal agency for purposes of National Security review (35 U.S.C. 181) and for review pursuant to the Atomic Energy Act (42 U.S.C. 218(c)).

7. A record from this system of records may be disclosed, as a routine use, to the Administrator, General Services, or his/her designee, during an inspection of records conducted by GSA as part of that agency's responsibility to recommend improvements in records management practices and programs, under authority of 44 U.S.C. 2904 and 2906. Such disclosure shall be made in accordance with the GSA regulations governing inspection of records for this purpose, and any other relevant (i.e., GSA or Commerce) directive. Such disclosure shall not be used to make determinations about individuals.

8. A record from this system of records may be disclosed, as a routine use, to the public after either publication of the application pursuant to 35 U.S.C. 122(b) or issuance of a patent pursuant to 35 U.S.C. 151. Further, a record may be disclosed, subject to the limitations of 37 CFR 1.14, as a routine use, to the public if the record was filed in an application which became abandoned or in which the proceedings were terminated and which application is referenced by either a published application, an application open to public inspections or an issued patent.

9. A record from this system of records may be disclosed, as a routine use, to a Federal, State, or local law enforcement agency, if the USPTO becomes aware of a violation or potential violation of law or regulation.

Electronic Patent Application Fee Transmittal

Application Number:	11241748
Filing Date:	29-Sep-2005
Title of Invention:	Physical layer transmitter for use in a broadband local area network
First Named Inventor/Applicant Name:	Anton Monk
Filer:	Bruce Wayne Greenhaus/Tim Ellis
Attorney Docket Number:	EC04003USU

Filed as Large Entity

Utility under 35 USC 111(a) Filing Fees

Description	Fee Code	Quantity	Amount	Sub-Total in USD($)
Basic Filing:				
Pages:				
Claims:				
Miscellaneous-Filing:				
Petition:				
Patent-Appeals-and-Interference:				
Post-Allowance-and-Post-Issuance:				
Extension-of-Time:				

Description	Fee Code	Quantity	Amount	Sub-Total in USD($)
Miscellaneous:				
Submission- Information Disclosure Stmt	1806	1	180	180
		Total in USD ($)		**180**

Electronic Acknowledgement Receipt	
EFS ID:	5628834
Application Number:	11241748
International Application Number:	
Confirmation Number:	2829
Title of Invention:	Physical layer transmitter for use in a broadband local area network
First Named Inventor/Applicant Name:	Anton Monk
Customer Number:	78271
Filer:	Bruce Wayne Greenhaus/Tim Ellis
Filer Authorized By:	Bruce Wayne Greenhaus
Attorney Docket Number:	EC04003USU
Receipt Date:	01-JUL-2009
Filing Date:	29-SEP-2005
Time Stamp:	17:04:53
Application Type:	Utility under 35 USC 111(a)

Payment information:

Submitted with Payment	yes
Payment Type	Deposit Account
Payment was successfully received in RAM	$180
RAM confirmation Number	3598
Deposit Account	504613
Authorized User	
The Director of the USPTO is hereby authorized to charge indicated fees and credit any overpayment as follows: Charge any Additional Fees required under 37 C.F.R. Section 1.17 (Patent application and reexamination processing fees) Charge any Additional Fees required under 37 C.F.R. Section 1.19 (Document supply fees)	

Charge any Additional Fees required under 37 C.F.R. Section 1.21 (Miscellaneous fees and charges)

File Listing:

Document Number	Document Description	File Name	File Size(Bytes)/ Message Digest	Multi Part /.zip	Pages (if appl.)
1	Information Disclosure Statement (IDS) Filed (SB/08)	E040004USU2_IDS_Filing_7-1-09.pdf	345230 cf6b9dca6522aea3bbaf6e79c4989d6e91b1c48a	no	7
Warnings:					
Information:					
This is not an USPTO supplied IDS fillable form					
2	Fee Worksheet (PTO-875)	fee-info.pdf	30426 1020ecbf48d1551dbd6e3dc441c91b6f60dafeda	no	2
Warnings:					
Information:					
		Total Files Size (in bytes):	375656		

This Acknowledgement Receipt evidences receipt on the noted date by the USPTO of the indicated documents, characterized by the applicant, and including page counts, where applicable. It serves as evidence of receipt similar to a Post Card, as described in MPEP 503.

<u>New Applications Under 35 U.S.C. 111</u>
If a new application is being filed and the application includes the necessary components for a filing date (see 37 CFR 1.53(b)-(d) and MPEP 506), a Filing Receipt (37 CFR 1.54) will be issued in due course and the date shown on this Acknowledgement Receipt will establish the filing date of the application.

<u>National Stage of an International Application under 35 U.S.C. 371</u>
If a timely submission to enter the national stage of an international application is compliant with the conditions of 35 U.S.C. 371 and other applicable requirements a Form PCT/DO/EO/903 indicating acceptance of the application as a national stage submission under 35 U.S.C. 371 will be issued in addition to the Filing Receipt, in due course.

<u>New International Application Filed with the USPTO as a Receiving Office</u>
If a new international application is being filed and the international application includes the necessary components for an international filing date (see PCT Article 11 and MPEP 1810), a Notification of the International Application Number and of the International Filing Date (Form PCT/RO/105) will be issued in due course, subject to prescriptions concerning national security, and the date shown on this Acknowledgement Receipt will establish the international filing date of the application.

PTO/SB/06 (07-06)
Approved for use through 1/31/2007. OMB 0651-0032
U.S. Patent and Trademark Office; U.S. DEPARTMENT OF COMMERCE
Under the Paperwork Reduction Act of 1995, no persons are required to respond to a collection of information unless it displays a valid OMB control number.

PATENT APPLICATION FEE DETERMINATION RECORD

Substitute for Form PTO-875

Application or Docket Number	Filing Date	☐ To be Mailed
11/241,748	09/29/2005	

APPLICATION AS FILED – PART I

FOR	(Column 1) NUMBER FILED	(Column 2) NUMBER EXTRA	SMALL ENTITY ☐ RATE ($)	SMALL ENTITY FEE ($)	OR	OTHER THAN SMALL ENTITY RATE ($)	OTHER THAN SMALL ENTITY FEE ($)
☒ BASIC FEE (37 CFR 1.16(a), (b), or (c))	N/A	N/A	N/A			N/A	300
☐ SEARCH FEE (37 CFR 1.16(k), (i), or (m))	N/A	N/A	N/A			N/A	
☐ EXAMINATION FEE (37 CFR 1.16(o), (p), or (q))	N/A	N/A	N/A			N/A	
TOTAL CLAIMS (37 CFR 1.16(i))	45 minus 20 =	* 25	X $ =		OR	X $50 =	1250
INDEPENDENT CLAIMS (37 CFR 1.16(h))	3 minus 3 =	* 0	X $ =			X $200 =	0
☐ APPLICATION SIZE FEE (37 CFR 1.16(s))	If the specification and drawings exceed 100 sheets of paper, the application size fee due is $250 ($125 for small entity) for each additional 50 sheets or fraction thereof. See 35 U.S.C. 41(a)(1)(G) and 37 CFR 1.16(s).						
☐ MULTIPLE DEPENDENT CLAIM PRESENT (37 CFR 1.16(j))							
* If the difference in column 1 is less than zero, enter "0" in column 2.			TOTAL			TOTAL	1550

APPLICATION AS AMENDED – PART II

AMENDMENT 07/01/2009

	(Column 1) CLAIMS REMAINING AFTER AMENDMENT		(Column 2) HIGHEST NUMBER PREVIOUSLY PAID FOR	(Column 3) PRESENT EXTRA	SMALL ENTITY RATE ($)	SMALL ENTITY ADDITIONAL FEE ($)	OR	OTHER THAN SMALL ENTITY RATE ($)	OTHER THAN SMALL ENTITY ADDITIONAL FEE ($)
Total (37 CFR 1.16(i))	* 24	Minus	** 45	= 0	X $ =		OR	X $52=	0
Independent (37 CFR 1.16(h))	* 1	Minus	***3	= 0	X $ =		OR	X $220=	0
☐ Application Size Fee (37 CFR 1.16(s))									
☐ FIRST PRESENTATION OF MULTIPLE DEPENDENT CLAIM (37 CFR 1.16(j))							OR		
					TOTAL ADD'L FEE		OR	TOTAL ADD'L FEE	0

AMENDMENT

	(Column 1) CLAIMS REMAINING AFTER AMENDMENT		(Column 2) HIGHEST NUMBER PREVIOUSLY PAID FOR	(Column 3) PRESENT EXTRA	RATE ($)	ADDITIONAL FEE ($)		RATE ($)	ADDITIONAL FEE ($)
Total (37 CFR 1.16(i))	*	Minus	**	=	X $ =		OR	X $ =	
Independent (37 CFR 1.16(h))	*	Minus	***	=	X $ =		OR	X $ =	
☐ Application Size Fee (37 CFR 1.16(s))									
☐ FIRST PRESENTATION OF MULTIPLE DEPENDENT CLAIM (37 CFR 1.16(j))							OR		
					TOTAL ADD'L FEE		OR	TOTAL ADD'L FEE	

* If the entry in column 1 is less than the entry in column 2, write "0" in column 3.
** If the "Highest Number Previously Paid For" IN THIS SPACE is less than 20, enter "20".
*** If the "Highest Number Previously Paid For" IN THIS SPACE is less than 3, enter "3".
The "Highest Number Previously Paid For" (Total or Independent) is the highest number found in the appropriate box in column 1.

Legal Instrument Examiner:
/JESSICA GAYNOR/

This collection of information is required by 37 CFR 1.16. The information is required to obtain or retain a benefit by the public which is to file (and by the USPTO to process) an application. Confidentiality is governed by 35 U.S.C. 122 and 37 CFR 1.14. This collection is estimated to take 12 minutes to complete, including gathering, preparing, and submitting the completed application form to the USPTO. Time will vary depending upon the individual case. Any comments on the amount of time you require to complete this form and/or suggestions for reducing this burden, should be sent to the Chief Information Officer, U.S. Patent and Trademark Office, U.S. Department of Commerce, P.O. Box 1450, Alexandria, VA 22313-1450. DO NOT SEND FEES OR COMPLETED FORMS TO THIS ADDRESS. **SEND TO: Commissioner for Patents, P.O. Box 1450, Alexandria, VA 22313-1450.**
If you need assistance in completing the form, call 1-800-PTO-9199 and select option 2.

UNITED STATES PATENT AND TRADEMARK OFFICE

UNITED STATES DEPARTMENT OF COMMERCE
United States Patent and Trademark Office
Address: COMMISSIONER FOR PATENTS
P.O. Box 1450
Alexandria, Virginia 22313-1450
www.uspto.gov

APPLICATION NO.	FILING DATE	FIRST NAMED INVENTOR	ATTORNEY DOCKET NO.	CONFIRMATION NO.
11/241,748	09/29/2005	Anton Monk	EC04003USU	2829

78271 7590 09/16/2009
The Eclipse Group LLP
10605 Balboa Blvd
Suite 300
Granada Hills, CA 91344

EXAMINER
CHEN, CAI Y

ART UNIT	PAPER NUMBER
2425	

MAIL DATE	DELIVERY MODE
09/16/2009	PAPER

Please find below and/or attached an Office communication concerning this application or proceeding.

The time period for reply, if any, is set in the attached communication.

PTOL-90A (Rev. 04/07)

Office Action Summary	Application No.	Applicant(s)	
	11/241,748	MONK ET AL.	
	Examiner	Art Unit	
	CAI CHEN	2425	

-- The MAILING DATE of this communication appears on the cover sheet with the correspondence address --

Period for Reply

A SHORTENED STATUTORY PERIOD FOR REPLY IS SET TO EXPIRE 3 MONTH(S) OR THIRTY (30) DAYS, WHICHEVER IS LONGER, FROM THE MAILING DATE OF THIS COMMUNICATION.

- Extensions of time may be available under the provisions of 37 CFR 1.136(a). In no event, however, may a reply be timely filed after SIX (6) MONTHS from the mailing date of this communication.
- If NO period for reply is specified above, the maximum statutory period will apply and will expire SIX (6) MONTHS from the mailing date of this communication.
- Failure to reply within the set or extended period for reply will, by statute, cause the application to become ABANDONED (35 U.S.C. § 133). Any reply received by the Office later than three months after the mailing date of this communication, even if timely filed, may reduce any earned patent term adjustment. See 37 CFR 1.704(b).

Status

1)☒ Responsive to communication(s) filed on 01 July 2009.

2a)☒ This action is **FINAL**. 2b)☐ This action is non-final.

3)☐ Since this application is in condition for allowance except for formal matters, prosecution as to the merits is closed in accordance with the practice under *Ex parte Quayle*, 1935 C.D. 11, 453 O.G. 213.

Disposition of Claims

4)☒ Claim(s) 1-7 and 9-25 is/are pending in the application.

4a) Of the above claim(s) _____ is/are withdrawn from consideration.

5)☐ Claim(s) _____ is/are allowed.

6)☒ Claim(s) 1-7 and 9-25 is/are rejected.

7)☐ Claim(s) _____ is/are objected to.

8)☐ Claim(s) _____ are subject to restriction and/or election requirement.

Application Papers

9)☐ The specification is objected to by the Examiner.

10)☐ The drawing(s) filed on _____ is/are: a)☐ accepted or b)☐ objected to by the Examiner.

Applicant may not request that any objection to the drawing(s) be held in abeyance. See 37 CFR 1.85(a).

Replacement drawing sheet(s) including the correction is required if the drawing(s) is objected to. See 37 CFR 1.121(d).

11)☐ The oath or declaration is objected to by the Examiner. Note the attached Office Action or form PTO-152.

Priority under 35 U.S.C. § 119

12)☐ Acknowledgment is made of a claim for foreign priority under 35 U.S.C. § 119(a)-(d) or (f).

a)☐ All b)☐ Some * c)☐ None of:

1.☐ Certified copies of the priority documents have been received.

2.☐ Certified copies of the priority documents have been received in Application No. _____.

3.☐ Copies of the certified copies of the priority documents have been received in this National Stage application from the International Bureau (PCT Rule 17.2(a)).

* See the attached detailed Office action for a list of the certified copies not received.

Attachment(s)

1) ☒ Notice of References Cited (PTO-892)

2) ☐ Notice of Draftsperson's Patent Drawing Review (PTO-948)

3) ☒ Information Disclosure Statement(s) (PTO/SB/08) Paper No(s)/Mail Date 07/01/2009.

4) ☐ Interview Summary (PTO-413) Paper No(s)/Mail Date. _____ .

5) ☐ Notice of Informal Patent Application

6) ☐ Other: _____.

DETAILED ACTION

Response to Arguments

Applicant's arguments with respect to claim 1-7, and 9-25 have been considered but are moot in view of the new ground(s) of rejection.

Claim Rejections - 35 USC § 103

1. The following is a quotation of 35 U.S.C. 103(a) which forms the basis for all obviousness rejections set forth in this Office action:

> (a) A patent may not be obtained though the invention is not identically disclosed or described as set forth in section 102 of this title, if the differences between the subject matter sought to be patented and the prior art are such that the subject matter as a whole would have been obvious at the time the invention was made to a person having ordinary skill in the art to which said subject matter pertains. Patentability shall not be negatived by the manner in which the invention was made.

2. Claims 1-6, 10-11, 14, and 16-25 are rejected under 35 U.S.C. 103(a) as being unpatentable over Gurantz in view of Sambamurthy (6,085,248) and further in view of Mao (7,302,700).

Regarding claim 1, Gurantz discloses discloses modem for communication to at least one node across a at least one channel coaxial network (Fig. 2, abstract, para. 20), the modem comprising:

a transmitter (Fig. 1, el. 270 or el. 280, para. 20, the modem has a transmitter);

an encoder in signal communication with the transmitter (para. 47, an encoder encodes data bits for transmission),

wherein the transmitter communicates the at least one transmit packet (para. 36-39).

Gurantz does not disclose an MAC layer [in signal communication with the transmitter] and wherein the MAC layer utilizes at least one probe packet to characterize the at least one channel to the at least one node and optimizes at least one transmit packet based upon the characterization of the channel,

Sambamurthy teaches an MAC layer [in signal communication with the transmitter] and wherein the MAC layer utilizes using data packet communication (abstract, Fig. 1B, Fig. 5A, col. 5, lines 60-col. 6, line 12, col. 22, lines 5-53).

optimizes at least one transmit packet based upon the characterization of the channel (col. 5, lines 38-50, transmit cyclic redundancy check unit is used to perform integrity of the transmit packet thus optimizing the transmit packet).

It would be obvious to one of ordinary in the art at the time of invention to modify Gurantz to include an MAC layer in signal communication with the transmitter and wherein the MAC layer utilizes using data packet communication and optimizes at least one transmit packet based upon the characterization of the channel, as taught by Sambamurthy, in order to perform better in data communication by using packet communication when during high data communication traffic period (col. 6, lines 1-12).

Garantz in view of Sambamurthy does not discloses wherein the MAC layer utilizes at least one probe packet to characterize the at least one channel to the at least one node,

Mao teaches wherein the MAC layer utilizes at least one probe packet to characterize the at least one channel to the at least one node (col. 3, lines 43-60).

It would be obvious to one of ordinary in the art at the time of invention to modify Garantz in view of Sambamurthy to include wherein the MAC layer utilizes at least one probe packet to characterize the at least one channel to the at least one node, as taught by Mao, in order for system to efficiently delivering the data packet to the digital equipment in the LAN.

Regarding claim 2, Gurantz in view of Sambamurthy and further in view of Mao discloses wherein the transmitter is a baseband transmitter (Gurantz, para. 42, transmitting the baseband signal).

Regarding claim 3, Gurantz in view of Sambamurthy and further in view of Mao discloses wherein the transmitter is a Radio Frequency ("RF") transmitter (Gurantz, para. 42 and 49).

Regarding claim 4, Gurantz in view of Sambamurthy and further in view of Mao teaches wherein the packet communication utilizes services (Sambamurthy, abstract, Fig. 1B, Fig. 5A, col. 5, lines 60-col. 6, line 12, col. 22, lines 5-53).

Regarding claim 5, Gurantz in view of Sambamurthy and further in view of Mao further discloses wherein the transmitter communicates with at least one

node using Time Division Duplex ("TDD") (Gurantz, para. 38-39, Sambamurthy, abstract, Fig. 1B, Fig. 5A, col. 5, lines 60-col. 6, line 12, col. 22, lines 5-53).

Regarding claim 6, Gurantz in view of Sambamurthy and further in view of Mao discloses wherein the packet communication utilizes formatting that includes a preamble; and a packet of data (Sambamurthy, Fig. 1B, 5A, col. col. 5, lines 60-col. 6, line 12, col. 22, lines 5-53).

Regarding claim 10, Gurantz in view of Sambamurthy and further in view of Mao discloses wherein the scrambling formatting includes Reed Solomon ("RS") encoding (Gurantz, para. 53).

Regarding claim 11, Gurantz in view of Sambamurthy and further in view of Mao discloses wherein the packet is padded to include an integral number of similar size and coding type RS codewords (Gurantz, para. 53, Sambamurthy, Fig. 1B, 5A, and 13, col. 22, lines 5-53, col. 32, lines 27-67, col. 33, lines 1-11).

Regarding claim 14, Gurantz in view of Sambamurthy and further in view of Mao discloses wherein the transmitter utilizes orthogonal frequency division multiplexing ("OFDM") modulation (Gurantz para. 46-49, para. 52-55).

Regarding claim 16, Gurantz in view of Sambamurthy and further in view of Mao discloses wherein the MAC layer utilizes orthogonal frequency division multiplexing ("OFDM") bit-loading (Gurantz para. 46-49, para. 52-55).

Regarding claim 17, Gurantz in view of Sambamurthy and further in view of Mao discloses wherein the formatting utilizes scrambling (Gurantz para. 46-49, para. 52-55, OFDM frequency bins scrambling).

Regarding claim 18, Gurantz in view of Sambamurthy and further in view of Mao discloses wherein the scrambling is byte scrambling (Gurantz para. 46-49, para. 52-55, OFDM frequency bins scrambling).

Regarding claim 19, Gurantz in view of Sambamurthy and further in view of Mao discloses wherein the scrambling is OFDM bin scrambling (Gurantz para. 46-49, para. 52-55, OFDM frequency bins scrambling).

Regarding claim 20, Gurantz in view of Sambamurthy and further in view of Mao discloses wherein the transmitter utilizes a modulation type

on each of its subcarriers chosen from the group consisting of: bipolar phase shift keying ("BPSK"); quadrature phase shift keying ("QPSK"); 8 quadrature amplitude modulation ("QAM"); 16 QAM; 32 QAM; 64 QAM; 128 QAM; and 256 QAM (Gurantz para. 49-50).

Regarding claim 21, Gurantz in view of Sambamurthy and further in view of Mao discloses wherein the modulation type is obtained from a translation table that maps data to waveform data (Gurantz para. 47-49, IDFT generates the OFDM waveforms data).

Regarding claim 22, Gurantz in view of Sambamurthy and further in view of Mao discloses wherein an amplitude factor is applied to the various modulation types (Gurantz para. 47-49).

Regarding claim 23, Gurantz in view of Sambamurthy and further in view of Mao discloses wherein the transmitter is capable of producing and transmitting a probe signal to the at least one node (Gurantz para. 20, the modem has a transmitter capable of sending a probe signal during the communication with other within LAN).

Regarding claim 24, Gurantz in view of Sambamurthy and further in view of Mao discloses wherein the transmitter wherein the transmitter is capable of producing a robust signal that includes redundant, repetitious subcarriers (Gurantz para. 20, para. 49-53, the modem has a transmitter capable of producing a probe signal during the communication with other within LAN by using the method of OFDM, and in the process the OFDM will create multiple subcarrier representing by 1 or 0, therefore subcarrier 1 or 0 will repeat during OFDM process).

Regarding claim 25, Gurantz in view of Sambamurthy and further in view of Mao discloses wherein the transmitter transmits robust repetitious subcarriers according to a predetermined format (Gurantz para. 20, para. 49-53, the modem has a transmitter capable of producing a probe signal during the communication with other within LAN by using the method of OFDM format, and in the process the OFDM will create multiple subcarrier representing by 1 or 0, therefore subcarrier 1 or 0 will repeat during OFDM process, finally, the transmitter transmits the OFDM signal to LAN).

3. Claim 7 is rejected under 35 U.S.C. 103(a) as being unpatentable over Gurantz in view of Sambamurthy and further in view of Mao and further in view of Orava (US 2002/0071477 A1).

Regarding claim 7, Gurantz in view of Sambamurthy and further in view of Mao discloses all limitation of claim 5.

Gurantz in view of Sambamurthy and further in view of Mao does not explicitly discloses wherein the packet communication includes at least one robust packet.

Orava teaches wherein the packet communication includes at least one robust packet (Fig. 5A, para. 37, ID packets are the robust packet).

It would be obvious to one of ordinary in the art at the time of invention to modify Gurantz in view of Sambamurthy and further in view of Mao to include

wherein the packet communication includes at least one robust packet, as taught by Orava, in order to effectively transmitting data packet with reduced error by using robust packet (para. 37).

4. Claims 9 and 12 are rejected under 35 U.S.C. 103(a) as being unpatentable over Gurantz in view of Sambamurthy and further in view of Mao and further in view of Kim (US 2004/0170157 A1).

Regarding claim 9, Gurantz in view of Sambamurthy and further in view of Mao discloses all limitation of claim 6. Gurantz in view of Sambamurthy and further in view of Mao further discloses providing conditionally access to the data packets (para. 42).

Gurantz in view of Sambamurthy and further in view of Mao does not explicitly disclose wherein the formatting includes packet encryption.

Kim teaches wherein the formatting includes packet encryption (para. 8, para. 12).

It would be obvious to one of ordinary in the art at the time of invention to modify Gurantz in view of Sambamurthy and further in view of Mao to include wherein the formatting includes packet encryption, as taught by Kim, in order to protect the data packet from unauthorized usage.

Regarding claim 12, Gurantz in view of Sambamurthy and further in view of Mao and further in view of Kim teaches wherein the formatting utilizes packet encryption (Kim, para. 8, para. 12).

4. Claim 13 is rejected under 35 U.S.C. 103(a) as being unpatentable over Gurantz in view of Sambamurthy and further in view of Mao and further in view of Kim (US 2004/0170157 A1) and further in view of Fortenberry (6,005,939).

Regarding claim 13, Gurantz in view of Sambamurthy and further in view of Mao and further in view of Kim discloses all limitation of claim 12.

Gurantz in view of Sambamurthy and further in view of Mao and further in view of Kim does not explicitly discloses [wherein the encryption utilizes] Date Encryption Standard ("DES").

Fortenberry teaches [wherein the encryption utilizes] Date Encryption Standard ("DES") (col. 9, lines 43-47).

It would be obvious to one of ordinary in the art at the time of invention to modify Gurantz in view of Sambamurthy and further in view of Mao and further in view of Kim to include wherein the encryption utilizes] Date Encryption Standard ("DES"), as taught by Fortenberry, in order to standardize the encryption method by using the industry wide know Encryption method in DES (col. 9, lines 43-47).

5. Claims 15 is rejected under 35 U.S.C. 103(a) as being unpatentable over Gurantz in view of Sambamurthy and further in view of Mao and further in view of Kim in view of Youge (6,522,650 B1).

Regarding claim 15, Gurantz in view of Sambamurthy and further in view of Mao and further in view of Kim discloses all limitation of claim 14, and further discloses wherein the transmitter utilizes OFDM applications.

Gurantz does not explicitly disclose [wherein the transmitter] utilizes padding [to utilize an integral number of OFDM symbols].

Youge teaches [wherein the transmitter] utilizes padding [to utilize an integral number of OFDM symbols] (Fig. 3, el. 114, col. 8, lines 22-39).

It would be obvious to one of ordinary in the art at the time of invention to modify Gurantz in view of Sambamurthy and further in view of Mao and further in view of Kim to include [wherein the transmitter] utilizes padding [to utilize an integral number of OFDM symbols], as taught by Youge, in order to provide a separation between two data block and indicates the ending of one data block.

Conclusion

Applicant's amendment necessitated the new ground(s) of rejection presented in this Office action. Accordingly, **THIS ACTION IS MADE FINAL**. See MPEP § 706.07(a). Applicant is reminded of the extension of time policy as set forth in 37 CFR 1.136(a).

A shortened statutory period for reply to this final action is set to expire THREE MONTHS from the mailing date of this action. In the event a first reply is filed within TWO MONTHS of the mailing date of this final action and the advisory action is not mailed until after the end of the THREE-MONTH shortened statutory period, then the shortened statutory period will expire on the date the advisory action is mailed, and any extension fee pursuant to 37 CFR 1.136(a) will be calculated from the mailing date of the advisory action. In no event, however, will the statutory period for reply expire later than SIX MONTHS from the date of this final action.

Any inquiry concerning this communication or earlier communications from the examiner should be directed to CAI CHEN whose telephone number is (571)270-5679. The examiner can normally be reached on 7:30 am to 4:30 pm.

If attempts to reach the examiner by telephone are unsuccessful, the examiner's supervisor, Brian Pendleton can be reached on 571-272-7527. The fax phone number for the organization where this application or proceeding is assigned is 571-273-8300.

Information regarding the status of an application may be obtained from the Patent Application Information Retrieval (PAIR) system. Status information for published applications may be obtained from either Private PAIR or Public PAIR. Status information for unpublished applications is available through Private PAIR only. For more information about the PAIR system, see http://pair-direct.uspto.gov. Should you have questions on access to the Private PAIR system, contact the Electronic Business Center (EBC) at 866-217-9197 (toll-free). If you would like assistance from a USPTO Customer Service Representative or access to the automated information system, call 800-786-9199 (IN USA OR CANADA) or 571-272-1000.

/CAI CHEN/
Examiner, Art Unit 2425

/Brian T. Pendleton/

Supervisory Patent Examiner, Art Unit 2425

Notice of References Cited	Application/Control No. 11/241,748	Applicant(s)/Patent Under Reexamination MONK ET AL.	
	Examiner CAI CHEN	Art Unit 2425	Page 1 of 1

U.S. PATENT DOCUMENTS

*		Document Number Country Code-Number-Kind Code	Date MM-YYYY	Name	Classification
*	A	US-2002/0071477	06-2002	Orava, Pekko	375/132
*	B	US-7,302,700	11-2007	Mao et al.	726/11
	C	US-			
	D	US-			
	E	US-			
	F	US-			
	G	US-			
	H	US-			
	I	US-			
	J	US-			
	K	US-			
	L	US-			
	M	US-			

FOREIGN PATENT DOCUMENTS

*		Document Number Country Code-Number-Kind Code	Date MM-YYYY	Country	Name	Classification
	N					
	O					
	P					
	Q					
	R					
	S					
	T					

NON-PATENT DOCUMENTS

*		Include as applicable: Author, Title Date, Publisher, Edition or Volume, Pertinent Pages)
	U	
	V	
	W	
	X	

*A copy of this reference is not being furnished with this Office action. (See MPEP § 707.05(a).)
Dates in MM-YYYY format are publication dates. Classifications may be US or foreign.

Index of Claims	Application/Control No.	Applicant(s)/Patent Under Reexamination
	11241748	MONK ET AL.
	Examiner	**Art Unit**
	CAI CHEN	2425

✓	Rejected	-	Cancelled	N	Non-Elected	A	Appeal
=	Allowed	÷	Restricted	I	Interference	O	Objected

☐ Claims renumbered in the same order as presented by applicant ☐ CPA ☐ T.D. ☐ R.1.47

CLAIM		DATE								
Final	Original	03/20/2009	09/05/2009							
	1	✓	✓							
	2	✓	✓							
	3	✓	✓							
	4	✓	✓							
	5	✓	✓							
	6	✓	✓							
	7	✓	✓							
	8	✓	-							
	9	✓	✓							
	10	✓	✓							
	11	✓	✓							
	12	✓	✓							
	13	✓	✓							
	14	✓	✓							
	15	✓	✓							
	16	✓	✓							
	17	✓	✓							
	18	✓	✓							
	19	✓	✓							
	20	✓	✓							
	21	✓	✓							
	22	✓	✓							
	23	✓	✓							
	24	✓	✓							
	25	✓	✓							
	26	✓	-							
	27	✓	-							
	28	✓	-							
	29	✓	-							
	30	✓	-							
	31	✓	-							
	32	✓	-							
	33	✓	-							
	34	✓	-							
	35	✓	-							
	36	✓	-							

Index of Claims	Application/Control No.	Applicant(s)/Patent Under Reexamination
	11241748	MONK ET AL.
	Examiner	**Art Unit**
	CAI CHEN	2425

✓	Rejected	-	Cancelled	N	Non-Elected	A	Appeal
=	Allowed	÷	Restricted	I	Interference	O	Objected

☐ Claims renumbered in the same order as presented by applicant ☐ CPA ☐ T.D. ☐ R.1.47

CLAIM		DATE								
Final	Original	03/20/2009	09/05/2009							
	37	✓	-							
	38	✓	-							
	39	✓	-							
	40	✓	-							
	41	✓	-							
	42	✓	-							
	43	✓	-							
	44	✓	-							
	45	✓	-							

Search Notes	Application/Control No.	Applicant(s)/Patent Under Reexamination
	11241748	MONK ET AL.
	Examiner	**Art Unit**
	CAI CHEN	2425

SEARCHED

Class	Subclass	Date	Examiner

SEARCH NOTES

Search Notes	Date	Examiner
Inventor Searches were performed in East	3/20/2009	cc
Class 725 and 370 are text searches	3/20/2009	cc

INTERFERENCE SEARCH

Class	Subclass	Date	Examiner

Doc code: IDS
Doc description: Information Disclosure Statement (IDS) Filed

PTO/SB/08a (06-09)
Approved for use through 07/31/2009. OMB 0651-0031
U.S. Patent and Trademark Office; U.S. DEPARTMENT OF COMMERCE

Under the Paperwork Reduction Act of 1995, no persons are required to respond to a collection of information unless it contains a valid OMB control number.

INFORMATION DISCLOSURE STATEMENT BY APPLICANT (**Not for submission under 37 CFR 1.99)**	Application Number	11241748
	Filing Date	2005-09-29
	First Named Inventor	Anton Monk
	Art Unit	2425
	Examiner Name	Cai Y. Chen
	Attorney Docket Number	EC04003USU

U.S.PATENTS

Examiner Initial*	Cite No	Patent Number	Kind Code[1]	Issue Date	Name of Patentee or Applicant of cited Document	Pages,Columns,Lines where Relevant Passages or Relevant Figures Appear
	1	6052380	A	2000-04-18	Bell, Russell W.	
	2	7486648	B1	2009-02-03	Baranowski; Robert	

If you wish to add additional U.S. Patent citation information please click the Add button.

U.S.PATENT APPLICATION PUBLICATIONS

Examiner Initial*	Cite No	Publication Number	Kind Code[1]	Publication Date	Name of Patentee or Applicant of cited Document	Pages,Columns,Lines where Relevant Passages or Relevant Figures Appear
	1	20040174841	A1	2004-09-09	Kubler, Joseph J.	

If you wish to add additional U.S. Published Application citation information please click the Add button.

FOREIGN PATENT DOCUMENTS

Examiner Initial*	Cite No	Foreign Document Number[3]	Country Code[2] ¡	Kind Code[4]	Publication Date	Name of Patentee or Applicant of cited Document	Pages,Columns,Lines where Relevant Passages or Relevant Figures Appear	T[5]
	1							☐

If you wish to add additional Foreign Patent Document citation information please click the Add button

NON-PATENT LITERATURE DOCUMENTS

EFS Web 2.1.5

ALL REFERENCES CONSIDERED EXCEPT WHERE LINED THROUGH. /C.C./

INFORMATION DISCLOSURE STATEMENT BY APPLICANT (Not for submission under 37 CFR 1.99)		
	Application Number	11241748
	Filing Date	2005-09-29
	First Named Inventor	Anton Monk
	Art Unit	2425
	Examiner Name	Cai Y. Chen
	Attorney Docket Number	EC04003USU

Examiner Initials*	Cite No	Include name of the author (in CAPITAL LETTERS), title of the article (when appropriate), title of the item (book, magazine, journal, serial, symposium, catalog, etc), date, pages(s), volume-issue number(s), publisher, city and/or country where published.	T[5]
	1		☐

If you wish to add additional non-patent literature document citation information please click the Add button

EXAMINER SIGNATURE

Examiner Signature	/Cai Chen/	Date Considered	09/05/2009

*EXAMINER: Initial if reference considered, whether or not citation is in conformance with MPEP 609. Draw line through a citation if not in conformance and not considered. Include copy of this form with next communication to applicant.

[1] See Kind Codes of USPTO Patent Documents at www.USPTO.GOV or MPEP 901.04. [2] Enter office that issued the document, by the two-letter code (WIPO Standard ST.3). [3] For Japanese patent documents, the indication of the year of the reign of the Emperor must precede the serial number of the patent document. [4] Kind of document by the appropriate symbols as indicated on the document under WIPO Standard ST.16 if possible. [5] Applicant is to place a check mark here if English language translation is attached.

EFS Web 2.1.15

ALL REFERENCES CONSIDERED EXCEPT WHERE LINED THROUGH. /C.C./

IN THE UNITED STATES PATENT AND TRADEMARK OFFICE

In Re Application of:
Monk, et al.

Serial No.: 11/241,748

Filed: 29 September 2005

For: Physical layer transmitter for use in a broadband local area network

Group Art Unit: 2425

Confirmation No. 2829

AMENDMENT

Mail Stop Amendment
Commissioner for Patents
P.O. Box 1450
Alexandria, VA 22313-1450

Attention: **Cai Y. Chen**
Examiner

Dear Sir:

In response to the Final Office Action of September 16, 2009, please note the following remarks and comments:

Claims begin on page 2 of this paper.

Remarks/Comments begin on page 6 of this paper.

I hereby certify that this correspondence is being electronically deposited with the Commissioner for Patents through the USPTO electronic filing system, on:

December 15, 2009
(Date of Deposit)

Tim Ellis
(Name of Person Making Deposit)

/Tim Ellis/
(Signature)

CLAIMS:

1. (Previously Presented) A modem for communication to at least one node across at least one channel of a coaxial network, the modem comprising:

a transmitter; and

a MAC layer in signal communication with the transmitter,

wherein the MAC layer utilizes at least one probe packet to characterize the at least one channel to the at least one node and optimizes at least one transmit packet based upon the characterization of the channel, and

wherein the transmitter communicates the at least one transmit packet.

2. (Original) The modem of claim 1, wherein the transmitter is a baseband transmitter.

3. (Original) The modem of claim 1, wherein the transmitter is a Radio Frequency ("RF") transmitter.

4. (Original) The modem of claim 1, wherein the packet communication utilizes services.

5. (Original) The modem of claim 1, wherein the transmitter communicates with at least one node utilizing packet communications using Time Division Duplex ("TDD").

6. (Original) The modem of claim 5, wherein the packet communication utilizes formatting that includes

a preamble; and

a packet of data.

7. (Previously Presented) The modem of claim 6, wherein the packet communications includes at least one robust packet.

8. (Cancelled)

9. (Original) The modem of claim 6, wherein the formatting includes packet encryption.

10. (Original) The modem of claim 6, wherein the scrambling formatting includes Reed Solomon ("RS") encoding.

11. (Original) The modem of claim 10, wherein the packet is padded to include an integral number of similar size and coding type RS codewords.

12. (Original) The modem of claim 6, wherein the formatting utilizes packet encryption.

13. (Original) (Previously Presented) The modem of claim 12, wherein the encryption utilizes Date Encryption Standard ("DES").

14. (Original) The modem of claim 1, wherein the transmitter utilizes orthogonal frequency division multiplexing ("OFDM") modulation.

15. (Original) The modem of claim 14, wherein the transmitter utilizes padding to utilize an integral number of OFDM symbols.

16. (Previously Presented) The modem of claim 1, wherein the MAC layer utilizes orthogonal frequency division multiplexing ("OFDM") bit-loading.

17. (Original) The modem of claim 16, wherein the formatting utilizes scrambling.

18. (Original) The modem of claim 17, wherein the scrambling is byte scrambling.

19. (Original) The modem of claim 18, wherein the scrambling is OFDM bin scrambling.

20. (Original) The modem of claim 14 wherein the transmitter utilizes a modulation type on each of its subcarriers chosen from the group consisting of:

bipolar phase shift keying ("BPSK");

quadrature phase shift keying ("QPSK");

8 quadrature amplitude modulation ("QAM");

16 QAM;

32 QAM;

64 QAM;

128 QAM; and

256 QAM.

21. (Original) The modem of claim 20, wherein the modulation type is obtained from a translation table that maps data to waveform data.

22. (Original) The modem of claim 21, wherein an amplitude factor is applied to the various modulation types.

23. (Original) The modem of claim 1, wherein the transmitter is capable of producing and transmitting a probe signal to the at least one node.

24. (Original) The modem of claim 1, wherein the transmitter is capable of producing a robust signal that includes redundant, repetitious subcarriers.

25. (Original) The modem of claim 24, wherein the transmitter transmits robust repetitious subcarriers according to a predetermined format.

26-45. (Cancelled)

REMARKS/COMMENTS

Claims 1-7 and 9-25 were pending in the application. All pending claims were rejected. No claims have been amended herein. Accordingly, Claims 1-7 and 9-25 are currently pending. Applicants respectfully request reconsideration and allowance of all pending claims. Alternatively, Applicants respectfully request that the Examiner enter the arguments presented here.

Discussion of Rejections Under 35 U.S.C. §103

Claims 1-8, 10-11, 14, 16-25, and 27-34 were rejected under 35 U.S.C. 103(a) as being unpatentable over Gurantz (US 2002/0166124 A1) in view of Sambamurthy (6,085,248) and Mao (7,302,700).

Applicants respectfully traverse the Examiner's rejections for the reasons provided herein. Claim 1 recites that the disclosed pre-coding functions of the MAC layer of generating a probe that can be used to **characterize a channel**. The **channel exists between the node in which the MAC layer resides and another node** of a communication network. The characterization is then used to optimize the transmitted packets based on the characteristics of the channel.

The Examiner has rejected Claim 1 stating that Mao teaches wherein the MAC layer utilizes at least one probe packet to characterize the at least one channel to the at least one node (col. 3, lines 43-60). However, Applicants respectfully submit that Mao does not teach or suggest in any way characterizing a channel to a node. Rather, what Mao teaches is sending a message with an address that may or may not be known to an L2 device. If the address is unknown, then creating and sending a probe packet that includes that unknown address. The probe packet is sent to "all interfaces" in an attempt to identify whether there is an interface that knows the address and to associate the address so that the address will no longer be unknown. Mao states:

> The probe packet can include a time to life (TTL) field in a IP header and the method can include setting a value of the TTL field such that a downstream node having the unknown MAC address and receiving the probe cell will **return an expired message** to the

> L2 device. The method can include dropping the packet after the expiration of the predetermined amount of time. **The packet can be dropped if the MAC address is unknown**. The method can include **receiving a response from on one of the broadcast interfaces and updating a table indicating a previously unknown MAC address** is associated with the responding interface. (emphasis added)

It should be clear upon a closer inspection of the disclosure by Mao that this is quite different from the claimed limitation of determining the characteristics of a channel between the sending node and a particular receiving node. In the first place, Mao doesn't determine the characteristics of a channel at all. In the second place, the particular path of the probe packet will depend upon whether any interface on the network recognizes the address in the probe packet. The point of Mao is to associate the unknown MAC address with a responding interface, not to characterize the channel between the transmitting node and the receiving node.

Applicants contend that nothing in any of the references cited by the Examiner teaches or suggests a MAC layer that **characterizes a channel and optimizes the channel between a node that includes the MAC layer and another node of a communication network**. Therefore, Applicants contend that Claim 1 is in condition for allowance.

Applicants further contend that each of those claims that depend from Claim 1 is also in condition for allowance for at least the reason stated with regard to Claim 1.

CONCLUSION

Applicants believe that all claims pending in the application are allowable. Applicants therefore respectfully request that a timely Notice of Allowance be issued in this case.

This is a response to the Office Action mailed on September 16, 2009, and as such, is timely submitted.

If there are any fees due in connection with the filing of the response, please charge the fees to our Deposit Account No. 50-4613. If a fee is required for an extension of time under 37 CFR 1.136, such an extension is requested and the fee should also be charged to our Deposit Account. Applicants have submitted herewith a notice of appeal and the required fee. Accordingly, should the Examiner maintain that the claims of the application are rejected for the reasons previously stated, applicants intend to appeal these rejections.

If the Examiner believes a telephone conference would expedite prosecution of this application, please telephone the undersigned.

Respectfully submitted,

Dated: December 15, 2009

By: /Bruce W. Greenhaus/

Bruce W. Greenhaus
Attorney for Applicants
Registration No. 37,339

Entropic Communications, Inc.
6290 Sequence Drive
San Diego, California 92121
Telephone: (619) 980-2612
e-mail address: patentteam@entropic.com

Electronic Patent Application Fee Transmittal

Application Number:	11241748
Filing Date:	29-Sep-2005
Title of Invention:	Physical layer transmitter for use in a broadband local area network
First Named Inventor/Applicant Name:	Anton Monk
Filer:	Bruce Wayne Greenhaus/Tim Ellis
Attorney Docket Number:	E040004USU2

Filed as Large Entity

Utility under 35 USC 111(a) Filing Fees

Description	Fee Code	Quantity	Amount	Sub-Total in USD($)
Basic Filing:				
Pages:				
Claims:				
Miscellaneous-Filing:				
Petition:				
Patent-Appeals-and-Interference:				
Notice of appeal	1401	1	540	540
Post-Allowance-and-Post-Issuance:				
Extension-of-Time:				

Description	Fee Code	Quantity	Amount	Sub-Total in USD($)
Miscellaneous:				
			Total in USD ($)	**540**

Electronic Acknowledgement Receipt	
EFS ID:	6641687
Application Number:	11241748
International Application Number:	
Confirmation Number:	2829
Title of Invention:	Physical layer transmitter for use in a broadband local area network
First Named Inventor/Applicant Name:	Anton Monk
Customer Number:	78271
Filer:	Bruce Wayne Greenhaus/Tim Ellis
Filer Authorized By:	Bruce Wayne Greenhaus
Attorney Docket Number:	E040004USU2
Receipt Date:	15-DEC-2009
Filing Date:	29-SEP-2005
Time Stamp:	16:48:42
Application Type:	Utility under 35 USC 111(a)

Payment information:

Submitted with Payment	yes
Payment Type	Deposit Account
Payment was successfully received in RAM	$540
RAM confirmation Number	3662
Deposit Account	504613
Authorized User	
The Director of the USPTO is hereby authorized to charge indicated fees and credit any overpayment as follows: Charge any Additional Fees required under 37 C.F.R. Section 1.16 (National application filing, search, and examination fees) Charge any Additional Fees required under 37 C.F.R. Section 1.17 (Patent application and reexamination processing fees)	

Charge any Additional Fees required under 37 C.F.R. Section 1.19 (Document supply fees)

Charge any Additional Fees required under 37 C.F.R. Section 1.21 (Miscellaneous fees and charges)

File Listing:

Document Number	Document Description	File Name	File Size(Bytes)/ Message Digest	Multi Part /.zip	Pages (if appl.)
1	Power of Attorney	E040004USU2_Power-of-Attorney_12-15-09.pdf	1465721 4695771081efa3e56b600ded1f46485d9de5b3ea	no	2
Warnings:					
Information:					
2	Assignee showing of ownership per 37 CFR 3.73(b).	E040004USU2_3_73b_12-15-09.pdf	423351 ddf2508cf7444f299ca27764d053dbb34957acaa	no	2
Warnings:					
Information:					
3	Notice of Appeal Filed	E040004USU2_Notice-of-Appeal_12-15-09.pdf	245680 7c1ac9dcf756a92ba0fe7c26804493ad9b7abaff	no	2
Warnings:					
Information:					
4		E040004USU2_OA-Response_12-15-09.pdf	112910 5c783276bfd593e7dc45e35656b81b4b070b5a50	yes	8

Multipart Description/PDF files in .zip description

Document Description	Start	End
Amendment After Final	1	1
Claims	2	5
Applicant Arguments/Remarks Made in an Amendment	6	7
Amendment After Final	8	8

Warnings:					
Information:					
5	Fee Worksheet (PTO-875)	fee-info.pdf	30060 a72a131b3e1d8ffeebb6457bf68cb9cdde3d919c	no	2
Warnings:					
Information:					
			Total Files Size (in bytes):	2277722	

This Acknowledgement Receipt evidences receipt on the noted date by the USPTO of the indicated documents, characterized by the applicant, and including page counts, where applicable. It serves as evidence of receipt similar to a Post Card, as described in MPEP 503.

New Applications Under 35 U.S.C. 111
If a new application is being filed and the application includes the necessary components for a filing date (see 37 CFR 1.53(b)-(d) and MPEP 506), a Filing Receipt (37 CFR 1.54) will be issued in due course and the date shown on this Acknowledgement Receipt will establish the filing date of the application.

National Stage of an International Application under 35 U.S.C. 371
If a timely submission to enter the national stage of an international application is compliant with the conditions of 35 U.S.C. 371 and other applicable requirements a Form PCT/DO/EO/903 indicating acceptance of the application as a national stage submission under 35 U.S.C. 371 will be issued in addition to the Filing Receipt, in due course.

New International Application Filed with the USPTO as a Receiving Office
If a new international application is being filed and the international application includes the necessary components for an international filing date (see PCT Article 11 and MPEP 1810), a Notification of the International Application Number and of the International Filing Date (Form PCT/RO/105) will be issued in due course, subject to prescriptions concerning national security, and the date shown on this Acknowledgement Receipt will establish the international filing date of the application.

PTO/SB/81 (01-09)
Approved for use through 11/30/2011. OMB 0651-0035
U.S. Patent and Trademark Office; U.S. DEPARTMENT OF COMMERCE
Under the Paperwork Reduction Act of 1995, no persons are required to respond to a collection of information unless it displays a valid OMB control number.

POWER OF ATTORNEY OR REVOCATION OF POWER OF ATTORNEY WITH A NEW POWER OF ATTORNEY AND CHANGE OF CORRESPONDENCE ADDRESS

Application Number	11/241,748
Filing Date	29-Sep-2005
First Named Inventor	Anton Monk
Title	Physical layer transmitter for use in a bro
Art Unit	2425
Examiner Name	CHEN, CAI Y
Attorney Docket Number	E040004USU2

I hereby revoke all previous powers of attorney given in the above-identified application.

☐ A Power of Attorney is submitted herewith.

OR

☒ I hereby appoint Practitioner(s) associated with the following Customer Number as my/our attorney(s) or agent(s) to prosecute the application identified above, and to transact all business in the United States Patent and Trademark Office connected therewith: 77330

OR

☐ I hereby appoint Practitioner(s) named below as my/our attorney(s) or agent(s) to prosecute the application identified above, and to transact all business in the United States Patent and Trademark Office connected therewith:

Practitioner(s) Name	Registration Number

Please recognize or change the correspondence address for the above-identified application to:

☒ The address associated with the above-mentioned Customer Number.

OR

☐ The address associated with Customer Number:

OR

☐ Firm or Individual Name					
Address					
City		State		Zip	
Country					
Telephone		Email			

I am the:

☐ Applicant/Inventor.

OR

☒ Assignee of record of the entire interest. See 37 CFR 3.71.
Statement under 37 CFR 3.73(b) (Form PTO/SB/96) submitted herewith or filed on December 15, 2009.

SIGNATURE of Applicant or Assignee of Record

Signature	/Bruce W. Greenhaus/	Date	December 15, 2009
Name	Bruce W. Greenhaus	Telephone	(619) 980-2612
Title and Company	V.P., Chief Patent Counsel - Entropic Communications, Inc.		

NOTE: Signatures of all the inventors or assignees of record of the entire interest or their representative(s) are required. Submit multiple forms if more than one signature is required, see below*.

☒ *Total of 2 forms are submitted.

This collection of information is required by 37 CFR 1.31, 1.32 and 1.33. The information is required to obtain or retain a benefit by the public which is to file (and by the USPTO to process) an application. Confidentiality is governed by 35 U.S.C. 122 and 37 CFR 1.11 and 1.14. This collection is estimated to take 3 minutes to complete, including gathering, preparing, and submitting the completed application form to the USPTO. Time will vary depending upon the individual case. Any comments on the amount of time you require to complete this form and/or suggestions for reducing this burden, should be sent to the Chief Information Officer, U.S. Patent and Trademark Office, U.S. Department of Commerce, P.O. Box 1450, Alexandria, VA 22313-1450. DO NOT SEND FEES OR COMPLETED FORMS TO THIS ADDRESS. **SEND TO: Commissioner for Patents, P.O. Box 1450, Alexandria, VA 22313-1450.**

If you need assistance in completing the form, call 1-800-PTO-9199 and select option 2.

Privacy Act Statement

The Privacy Act of 1974 (P.L. 93-579) requires that you be given certain information in connection with your submission of the attached form related to a patent application or patent. Accordingly, pursuant to the requirements of the Act, please be advised that: (1) the general authority for the collection of this information is 35 U.S.C. 2(b)(2); (2) furnishing of the information solicited is voluntary; and (3) the principal purpose for which the information is used by the U.S. Patent and Trademark Office is to process and/or examine your submission related to a patent application or patent. If you do not furnish the requested information, the U.S. Patent and Trademark Office may not be able to process and/or examine your submission, which may result in termination of proceedings or abandonment of the application or expiration of the patent.

The information provided by you in this form will be subject to the following routine uses:

1. The information on this form will be treated confidentially to the extent allowed under the Freedom of Information Act (5 U.S.C. 552) and the Privacy Act (5 U.S.C 552a). Records from this system of records may be disclosed to the Department of Justice to determine whether disclosure of these records is required by the Freedom of Information Act.
2. A record from this system of records may be disclosed, as a routine use, in the course of presenting evidence to a court, magistrate, or administrative tribunal, including disclosures to opposing counsel in the course of settlement negotiations.
3. A record in this system of records may be disclosed, as a routine use, to a Member of Congress submitting a request involving an individual, to whom the record pertains, when the individual has requested assistance from the Member with respect to the subject matter of the record.
4. A record in this system of records may be disclosed, as a routine use, to a contractor of the Agency having need for the information in order to perform a contract. Recipients of information shall be required to comply with the requirements of the Privacy Act of 1974, as amended, pursuant to 5 U.S.C. 552a(m).
5. A record related to an International Application filed under the Patent Cooperation Treaty in this system of records may be disclosed, as a routine use, to the International Bureau of the World Intellectual Property Organization, pursuant to the Patent Cooperation Treaty.
6. A record in this system of records may be disclosed, as a routine use, to another federal agency for purposes of National Security review (35 U.S.C. 181) and for review pursuant to the Atomic Energy Act (42 U.S.C. 218(c)).
7. A record from this system of records may be disclosed, as a routine use, to the Administrator, General Services, or his/her designee, during an inspection of records conducted by GSA as part of that agency's responsibility to recommend improvements in records management practices and programs, under authority of 44 U.S.C. 2904 and 2906. Such disclosure shall be made in accordance with the GSA regulations governing inspection of records for this purpose, and any other relevant (i.e., GSA or Commerce) directive. Such disclosure shall not be used to make determinations about individuals.
8. A record from this system of records may be disclosed, as a routine use, to the public after either publication of the application pursuant to 35 U.S.C. 122(b) or issuance of a patent pursuant to 35 U.S.C. 151. Further, a record may be disclosed, subject to the limitations of 37 CFR 1.14, as a routine use, to the public if the record was filed in an application which became abandoned or in which the proceedings were terminated and which application is referenced by either a published application, an application open to public inspection or an issued patent.
9. A record from this system of records may be disclosed, as a routine use, to a Federal, State, or local law enforcement agency, if the USPTO becomes aware of a violation or potential violation of law or regulation.

PTO/SB/96 (07-09)
Approved for use through 07/31/2012. OMB 0651-0031
U.S. Patent and Trademark Office; U.S. DEPARTMENT OF COMMERCE
Under the Paperwork Reduction Act of 1995, no persons are required to respond to a collection of information unless it displays a valid OMB control number.

STATEMENT UNDER 37 CFR 3.73(b)

Applicant/Patent Owner: Entropic Communications, Inc.

Application No./Patent No.: 11/241,748 Filed/Issue Date: 29-Sep-2005

Titled:
Physical layer transmitter for use in a broadband local area network

Entropic Communications, Inc. , a Corporation
(Name of Assignee) (Type of Assignee, e.g., corporation, partnership, university, government agency, etc.

states that it is:

1. [X] the assignee of the entire right, title, and interest in;

2. [ ] an assignee of less than the entire right, title, and interest in
(The extent (by percentage) of its ownership interest is _____ %); or

3. [ ] the assignee of an undivided interest in the entirety of (a complete assignment from one of the joint inventors was made)

the patent application/patent identified above, by virtue of either:

A. [X] An assignment from the inventor(s) of the patent application/patent identified above. The assignment was recorded in the United States Patent and Trademark Office at Reel 017319, Frame 0389, or for which a copy therefore is attached.

OR

B. [ ] A chain of title from the inventor(s), of the patent application/patent identified above, to the current assignee as follows:

1. From: _____ To: _____
The document was recorded in the United States Patent and Trademark Office at
Reel _____, Frame _____, or for which a copy thereof is attached.

2. From: _____ To: _____
The document was recorded in the United States Patent and Trademark Office at
Reel _____, Frame _____, or for which a copy thereof is attached.

3. From: _____ To: _____
The document was recorded in the United States Patent and Trademark Office at
Reel _____, Frame _____, or for which a copy thereof is attached.

[ ] Additional documents in the chain of title are listed on a supplemental sheet(s).

[ ] As required by 37 CFR 3.73(b)(1)(i), the documentary evidence of the chain of title from the original owner to the assignee was, or concurrently is being, submitted for recordation pursuant to 37 CFR 3.11.

[NOTE: A separate copy (*i.e.*, a true copy of the original assignment document(s)) must be submitted to Assignment Division in accordance with 37 CFR Part 3, to record the assignment in the records of the USPTO. See MPEP 302.08]

The undersigned (whose title is supplied below) is authorized to act on behalf of the assignee.

/Bruce W. Greenhaus/ December 15, 2009
Signature Date

Bruce W. Greenhaus V.P., Chief Patent Counsel
Printed or Typed Name Title

This collection of information is required by 37 CFR 3.73(b). The information is required to obtain or retain a benefit by the public which is to file (and by the USPTO to process) an application. Confidentiality is governed by 35 U.S.C. 122 and 37 CFR 1.11 and 1.14. This collection is estimated to take 12 minutes to complete, including gathering, preparing, and submitting the completed application form to the USPTO. Time will vary depending upon the individual case. Any comments on the amount of time you require to complete this form and/or suggestions for reducing this burden, should be sent to the Chief Information Officer, U.S. Patent and Trademark Office, U.S. Department of Commerce, P.O. Box 1450, Alexandria, VA 22313-1450. DO NOT SEND FEES OR COMPLETED FORMS TO THIS ADDRESS. **SEND TO: Commissioner for Patents, P.O. Box 1450, Alexandria, VA 22313-1450.**

If you need assistance in completing the form, call 1-800-PTO-9199 and select option 2.

Privacy Act Statement

The **Privacy Act of 1974 (P.L. 93-579)** requires that you be given certain information in connection with your submission of the attached form related to a patent application or patent. Accordingly, pursuant to the requirements of the Act, please be advised that: (1) the general authority for the collection of this information is 35 U.S.C. 2(b)(2); (2) furnishing of the information solicited is voluntary; and (3) the principal purpose for which the information is used by the U.S. Patent and Trademark Office is to process and/or examine your submission related to a patent application or patent. If you do not furnish the requested information, the U.S. Patent and Trademark Office may not be able to process and/or examine your submission, which may result in termination of proceedings or abandonment of the application or expiration of the patent.

The information provided by you in this form will be subject to the following routine uses:

1. The information on this form will be treated confidentially to the extent allowed under the Freedom of Information Act (5 U.S.C. 552) and the Privacy Act (5 U.S.C 552a). Records from this system of records may be disclosed to the Department of Justice to determine whether disclosure of these records is required by the Freedom of Information Act.
2. A record from this system of records may be disclosed, as a routine use, in the course of presenting evidence to a court, magistrate, or administrative tribunal, including disclosures to opposing counsel in the course of settlement negotiations.
3. A record in this system of records may be disclosed, as a routine use, to a Member of Congress submitting a request involving an individual, to whom the record pertains, when the individual has requested assistance from the Member with respect to the subject matter of the record.
4. A record in this system of records may be disclosed, as a routine use, to a contractor of the Agency having need for the information in order to perform a contract. Recipients of information shall be required to comply with the requirements of the Privacy Act of 1974, as amended, pursuant to 5 U.S.C. 552a(m).
5. A record related to an International Application filed under the Patent Cooperation Treaty in this system of records may be disclosed, as a routine use, to the International Bureau of the World Intellectual Property Organization, pursuant to the Patent Cooperation Treaty.
6. A record in this system of records may be disclosed, as a routine use, to another federal agency for purposes of National Security review (35 U.S.C. 181) and for review pursuant to the Atomic Energy Act (42 U.S.C. 218(c)).
7. A record from this system of records may be disclosed, as a routine use, to the Administrator, General Services, or his/her designee, during an inspection of records conducted by GSA as part of that agency's responsibility to recommend improvements in records management practices and programs, under authority of 44 U.S.C. 2904 and 2906. Such disclosure shall be made in accordance with the GSA regulations governing inspection of records for this purpose, and any other relevant (*i.e.*, GSA or Commerce) directive. Such disclosure shall not be used to make determinations about individuals.
8. A record from this system of records may be disclosed, as a routine use, to the public after either publication of the application pursuant to 35 U.S.C. 122(b) or issuance of a patent pursuant to 35 U.S.C. 151. Further, a record may be disclosed, subject to the limitations of 37 CFR 1.14, as a routine use, to the public if the record was filed in an application which became abandoned or in which the proceedings were terminated and which application is referenced by either a published application, an application open to public inspection or an issued patent.
9. A record from this system of records may be disclosed, as a routine use, to a Federal, State, or local law enforcement agency, if the USPTO becomes aware of a violation or potential violation of law or regulation.

PTO/SB/31 (07-09)
Approved for use through 07/31/2012. OMB 0651-0031
U.S. Patent and Trademark Office; U.S. DEPARTMENT OF COMMERCE
Under the Paperwork Reduction Act of 1995, no persons are required to respond to a collection of information unless it displays a valid OMB control number.

NOTICE OF APPEAL FROM THE EXAMINER TO THE BOARD OF PATENT APPEALS AND INTERFERENCES

Docket Number (Optional): E040004USU2

I hereby certify that this correspondence is being facsimile transmitted to the USPTO or deposited with the United States Postal Service with sufficient postage as first class mail in an envelope addressed to "Commissioner for Patents, P.O. Box 1450, Alexandria, VA 22313-1450" [37 CFR 1.8(a)]
on _____

Signature _____

Typed or printed name _____

In re Application of: Monk, et al.

Application Number: 11/241,748

Filed: 29-Sep-2005

For: Physical layer transmitter for use in a broadband local area network

Art Unit: 2425

Examiner: CHEN, CAI Y

Applicant hereby **appeals** to the Board of Patent Appeals and Interferences from the last decision of the examiner.

The fee for this Notice of Appeal is (37 CFR 41.20(b)(1)) $ 540.00

☐ Applicant claims small entity status. See 37 CFR 1.27. Therefore, the fee shown above is reduced by half, and the resulting fee is: $ _____

☐ A check in the amount of the fee is enclosed.

☐ Payment by credit card. Form PTO-2038 is attached.

☑ The Director has already been authorized to charge fees in this application to a Deposit Account.

☑ The Director is hereby authorized to charge any fees which may be required, or credit any overpayment to Deposit Account No. 504613 .

☐ A petition for an extension of time under 37 CFR 1.136(a) (PTO/SB/22) is enclosed.

WARNING: Information on this form may become public. Credit card information should not be included on this form. Provide credit card information and authorization on PTO-2038.

I am the

☐ applicant/inventor.

☑ assignee of record of the entire interest. See 37 CFR 3.71. Statement under 37 CFR 3.73(b) is enclosed. (Form PTO/SB/96)

☐ attorney or agent of record. Registration number _____.

☑ attorney or agent acting under 37 CFR 1.34. Registration number if acting under 37 CFR 1.34. 37339

/Bruce W. Greenhaus/
Signature

Bruce W. Greenhaus
Typed or printed name

(619) 980-2612
Telephone number

December 15, 2009
Date

NOTE: Signatures of all the inventors or assignees of record of the entire interest or their representative(s) are required. Submit multiple forms if more than one signature is required, see below*.

☑ *Total of 2 forms are submitted.

This collection of information is required by 37 CFR 41.31. The information is required to obtain or retain a benefit by the public which is to file (and by the USPTO to process) an application. Confidentiality is governed by 35 U.S.C. 122 and 37 CFR 1.11, 1.14 and 41.6. This collection is estimated to take 12 minutes to complete, including gathering, preparing, and submitting the completed application form to the USPTO. Time will vary depending upon the individual case. Any comments on the amount of time you require to complete this form and/or suggestions for reducing this burden, should be sent to the Chief Information Officer, U.S. Patent and Trademark Office, U.S. Department of Commerce, P.O. Box 1450, Alexandria, VA 22313-1450. DO NOT SEND FEES OR COMPLETED FORMS TO THIS ADDRESS. **SEND TO: Commissioner for Patents, P.O. Box 1450, Alexandria, VA 22313-1450.**

If you need assistance in completing the form, call 1-800-PTO-9199 and select option 2.

Privacy Act Statement

The **Privacy Act of 1974 (P.L. 93-579)** requires that you be given certain information in connection with your submission of the attached form related to a patent application or patent. Accordingly, pursuant to the requirements of the Act, please be advised that: (1) the general authority for the collection of this information is 35 U.S.C. 2(b)(2); (2) furnishing of the information solicited is voluntary; and (3) the principal purpose for which the information is used by the U.S. Patent and Trademark Office is to process and/or examine your submission related to a patent application or patent. If you do not furnish the requested information, the U.S. Patent and Trademark Office may not be able to process and/or examine your submission, which may result in termination of proceedings or abandonment of the application or expiration of the patent.

The information provided by you in this form will be subject to the following routine uses:

1. The information on this form will be treated confidentially to the extent allowed under the Freedom of Information Act (5 U.S.C. 552) and the Privacy Act (5 U.S.C 552a). Records from this system of records may be disclosed to the Department of Justice to determine whether disclosure of these records is required by the Freedom of Information Act.
2. A record from this system of records may be disclosed, as a routine use, in the course of presenting evidence to a court, magistrate, or administrative tribunal, including disclosures to opposing counsel in the course of settlement negotiations.
3. A record in this system of records may be disclosed, as a routine use, to a Member of Congress submitting a request involving an individual, to whom the record pertains, when the individual has requested assistance from the Member with respect to the subject matter of the record.
4. A record in this system of records may be disclosed, as a routine use, to a contractor of the Agency having need for the information in order to perform a contract. Recipients of information shall be required to comply with the requirements of the Privacy Act of 1974, as amended, pursuant to 5 U.S.C. 552a(m).
5. A record related to an International Application filed under the Patent Cooperation Treaty in this system of records may be disclosed, as a routine use, to the International Bureau of the World Intellectual Property Organization, pursuant to the Patent Cooperation Treaty.
6. A record in this system of records may be disclosed, as a routine use, to another federal agency for purposes of National Security review (35 U.S.C. 181) and for review pursuant to the Atomic Energy Act (42 U.S.C. 218(c)).
7. A record from this system of records may be disclosed, as a routine use, to the Administrator, General Services, or his/her designee, during an inspection of records conducted by GSA as part of that agency's responsibility to recommend improvements in records management practices and programs, under authority of 44 U.S.C. 2904 and 2906. Such disclosure shall be made in accordance with the GSA regulations governing inspection of records for this purpose, and any other relevant (*i.e.*, GSA or Commerce) directive. Such disclosure shall not be used to make determinations about individuals.
8. A record from this system of records may be disclosed, as a routine use, to the public after either publication of the application pursuant to 35 U.S.C. 122(b) or issuance of a patent pursuant to 35 U.S.C. 151. Further, a record may be disclosed, subject to the limitations of 37 CFR 1.14, as a routine use, to the public if the record was filed in an application which became abandoned or in which the proceedings were terminated and which application is referenced by either a published application, an application open to public inspection or an issued patent.
9. A record from this system of records may be disclosed, as a routine use, to a Federal, State, or local law enforcement agency, if the USPTO becomes aware of a violation or potential violation of law or regulation.

PTO/SB/06 (07-06)
Approved for use through 1/31/2007. OMB 0651-0032
U.S. Patent and Trademark Office; U.S. DEPARTMENT OF COMMERCE
Under the Paperwork Reduction Act of 1995, no persons are required to respond to a collection of information unless it displays a valid OMB control number.

PATENT APPLICATION FEE DETERMINATION RECORD

Substitute for Form PTO-875

Application or Docket Number	Filing Date	☐ To be Mailed
11/241,748	09/29/2005	

APPLICATION AS FILED – PART I

FOR	(Column 1) NUMBER FILED	(Column 2) NUMBER EXTRA	SMALL ENTITY ☐ RATE ($)	SMALL ENTITY FEE ($)	OR	OTHER THAN SMALL ENTITY RATE ($)	OTHER THAN SMALL ENTITY FEE ($)
☐ BASIC FEE (37 CFR 1.16(a), (b), or (c))	N/A	N/A	N/A			N/A	
☐ SEARCH FEE (37 CFR 1.16(k), (i), or (m))	N/A	N/A	N/A			N/A	
☐ EXAMINATION FEE (37 CFR 1.16(o), (p), or (q))	N/A	N/A	N/A			N/A	
TOTAL CLAIMS (37 CFR 1.16(i))	minus 20 =	*	X $ =		OR	X $ =	
INDEPENDENT CLAIMS (37 CFR 1.16(h))	minus 3 =	*	X $ =			X $ =	
☐ APPLICATION SIZE FEE (37 CFR 1.16(s))	If the specification and drawings exceed 100 sheets of paper, the application size fee due is $250 ($125 for small entity) for each additional 50 sheets or fraction thereof. See 35 U.S.C. 41(a)(1)(G) and 37 CFR 1.16(s).						
☐ MULTIPLE DEPENDENT CLAIM PRESENT (37 CFR 1.16(j))							
* If the difference in column 1 is less than zero, enter "0" in column 2.			TOTAL			TOTAL	

APPLICATION AS AMENDED – PART II

AMENDMENT 12/15/2009

	(Column 1) CLAIMS REMAINING AFTER AMENDMENT		(Column 2) HIGHEST NUMBER PREVIOUSLY PAID FOR	(Column 3) PRESENT EXTRA	SMALL ENTITY RATE ($)	SMALL ENTITY ADDITIONAL FEE ($)	OR	OTHER THAN SMALL ENTITY RATE ($)	OTHER THAN SMALL ENTITY ADDITIONAL FEE ($)
Total (37 CFR 1.16(i))	* 24	Minus	** 45	= 0	X $ =		OR	X $52=	0
Independent (37 CFR 1.16(h))	* 1	Minus	***3	= 0	X $ =		OR	X $220=	0
☐ Application Size Fee (37 CFR 1.16(s))									
☐ FIRST PRESENTATION OF MULTIPLE DEPENDENT CLAIM (37 CFR 1.16(j))							OR		
					TOTAL ADD'L FEE		OR	TOTAL ADD'L FEE	0

AMENDMENT

	(Column 1) CLAIMS REMAINING AFTER AMENDMENT		(Column 2) HIGHEST NUMBER PREVIOUSLY PAID FOR	(Column 3) PRESENT EXTRA	RATE ($)	ADDITIONAL FEE ($)		RATE ($)	ADDITIONAL FEE ($)
Total (37 CFR 1.16(i))	*	Minus	**	=	X $ =		OR	X $ =	
Independent (37 CFR 1.16(h))	*	Minus	***	=	X $ =		OR	X $ =	
☐ Application Size Fee (37 CFR 1.16(s))									
☐ FIRST PRESENTATION OF MULTIPLE DEPENDENT CLAIM (37 CFR 1.16(j))							OR		
					TOTAL ADD'L FEE		OR	TOTAL ADD'L FEE	

* If the entry in column 1 is less than the entry in column 2, write "0" in column 3.
** If the "Highest Number Previously Paid For" IN THIS SPACE is less than 20, enter "20".
*** If the "Highest Number Previously Paid For" IN THIS SPACE is less than 3, enter "3".
The "Highest Number Previously Paid For" (Total or Independent) is the highest number found in the appropriate box in column 1.

Legal Instrument Examiner:
/FRANCES Y. FIELDS/

This collection of information is required by 37 CFR 1.16. The information is required to obtain or retain a benefit by the public which is to file (and by the USPTO to process) an application. Confidentiality is governed by 35 U.S.C. 122 and 37 CFR 1.14. This collection is estimated to take 12 minutes to complete, including gathering, preparing, and submitting the completed application form to the USPTO. Time will vary depending upon the individual case. Any comments on the amount of time you require to complete this form and/or suggestions for reducing this burden, should be sent to the Chief Information Officer, U.S. Patent and Trademark Office, U.S. Department of Commerce, P.O. Box 1450, Alexandria, VA 22313-1450. DO NOT SEND FEES OR COMPLETED FORMS TO THIS ADDRESS. **SEND TO: Commissioner for Patents, P.O. Box 1450, Alexandria, VA 22313-1450.**
If you need assistance in completing the form, call 1-800-PTO-9199 and select option 2.

DO NOT ENTER: /C.C./

Docket No. E040004USU2 **Serial No. 11/241,748**

IN THE UNITED STATES PATENT AND TRADEMARK OFFICE

In Re Application of:
Monk, et al.

Serial No.: 11/241,748

Filed: 29 September 2005

For: Physical layer transmitter for use in a broadband local area network

Group Art Unit: 2425

Confirmation No. 2829

AMENDMENT

Mail Stop Amendment
Commissioner for Patents
P.O. Box 1450
Alexandria, VA 22313-1450

Attention: **Cai Y. Chen**
Examiner

Dear Sir:

In response to the Final Office Action of September 16, 2009, please note the following remarks and comments:

Claims begin on page 2 of this paper.

Remarks/Comments begin on page 6 of this paper.

I hereby certify that this correspondence is being electronically deposited with the Commissioner for Patents through the USPTO electronic filing system, on:

December 15, 2009
(Date of Deposit)

Tim Ellis
(Name of Person Making Deposit)

/Tim Ellis/
(Signature)

UNITED STATES PATENT AND TRADEMARK OFFICE

UNITED STATES DEPARTMENT OF COMMERCE
United States Patent and Trademark Office
Address: COMMISSIONER FOR PATENTS
P.O. Box 1450
Alexandria, Virginia 22313-1450
www.uspto.gov

APPLICATION NO.	FILING DATE	FIRST NAMED INVENTOR	ATTORNEY DOCKET NO.	CONFIRMATION NO.
11/241,748	09/29/2005	Anton Monk	E040004USU2	2829

78271 7590 12/28/2009
The Eclipse Group LLP
10605 Balboa Blvd
Suite 300
Granada Hills, CA 91344

EXAMINER
CHEN, CAI Y

ART UNIT	PAPER NUMBER
2425	

MAIL DATE	DELIVERY MODE
12/28/2009	PAPER

Please find below and/or attached an Office communication concerning this application or proceeding.

The time period for reply, if any, is set in the attached communication.

PTOL-90A (Rev. 04/07)

Advisory Action Before the Filing of an Appeal Brief	**Application No.** 11/241,748	**Applicant(s)** MONK ET AL.	
	Examiner CAI CHEN	**Art Unit** 2425	

--The MAILING DATE of this communication appears on the cover sheet with the correspondence address --

THE REPLY FILED 15 December 2009 FAILS TO PLACE THIS APPLICATION IN CONDITION FOR ALLOWANCE.

1. ☒ The reply was filed after a final rejection, but prior to or on the same day as filing a Notice of Appeal. To avoid abandonment of this application, applicant must timely file one of the following replies: (1) an amendment, affidavit, or other evidence, which places the application in condition for allowance; (2) a Notice of Appeal (with appeal fee) in compliance with 37 CFR 41.31; or (3) a Request for Continued Examination (RCE) in compliance with 37 CFR 1.114. The reply must be filed within one of the following time periods:
   a) ☐ The period for reply expires _____months from the mailing date of the final rejection.
   b) ☒ The period for reply expires on: (1) the mailing date of this Advisory Action, or (2) the date set forth in the final rejection, whichever is later. In no event, however, will the statutory period for reply expire later than SIX MONTHS from the mailing date of the final rejection.
   Examiner Note: If box 1 is checked, check either box (a) or (b). ONLY CHECK BOX (b) WHEN THE FIRST REPLY WAS FILED WITHIN TWO MONTHS OF THE FINAL REJECTION. See MPEP 706.07(f).

Extensions of time may be obtained under 37 CFR 1.136(a). The date on which the petition under 37 CFR 1.136(a) and the appropriate extension fee have been filed is the date for purposes of determining the period of extension and the corresponding amount of the fee. The appropriate extension fee under 37 CFR 1.17(a) is calculated from: (1) the expiration date of the shortened statutory period for reply originally set in the final Office action; or (2) as set forth in (b) above, if checked. Any reply received by the Office later than three months after the mailing date of the final rejection, even if timely filed, may reduce any earned patent term adjustment. See 37 CFR 1.704(b).

NOTICE OF APPEAL

2. ☒ The Notice of Appeal was filed on *15 December 2009*. A brief in compliance with 37 CFR 41.37 must be filed within two months of the date of filing the Notice of Appeal (37 CFR 41.37(a)), or any extension thereof (37 CFR 41.37(e)), to avoid dismissal of the appeal. Since a Notice of Appeal has been filed, any reply must be filed within the time period set forth in 37 CFR 41.37(a).

AMENDMENTS

3. ☒ The proposed amendment(s) filed after a final rejection, but prior to the date of filing a brief, will not be entered because
   (a) ☐ They raise new issues that would require further consideration and/or search (see NOTE below);
   (b) ☐ They raise the issue of new matter (see NOTE below);
   (c) ☒ They are not deemed to place the application in better form for appeal by materially reducing or simplifying the issues for appeal; and/or
   (d) ☐ They present additional claims without canceling a corresponding number of finally rejected claims.
   NOTE: _____. (See 37 CFR 1.116 and 41.33(a)).
4. ☐ The amendments are not in compliance with 37 CFR 1.121. See attached Notice of Non-Compliant Amendment (PTOL-324).
5. ☐ Applicant's reply has overcome the following rejection(s): _____.
6. ☐ Newly proposed or amended claim(s) _____ would be allowable if submitted in a separate, timely filed amendment canceling the non-allowable claim(s).
7. ☒ For purposes of appeal, the proposed amendment(s): a) ☒ will not be entered, or b) ☐ will be entered and an explanation of how the new or amended claims would be rejected is provided below or appended.
   The status of the claim(s) is (or will be) as follows:
   Claim(s) allowed: _____.
   Claim(s) objected to: _____.
   Claim(s) rejected: *1-7, and 9-25*.
   Claim(s) withdrawn from consideration: _____.

AFFIDAVIT OR OTHER EVIDENCE

8. ☐ The affidavit or other evidence filed after a final action, but before or on the date of filing a Notice of Appeal will not be entered because applicant failed to provide a showing of good and sufficient reasons why the affidavit or other evidence is necessary and was not earlier presented. See 37 CFR 1.116(e).
9. ☒ The affidavit or other evidence filed after the date of filing a Notice of Appeal, but prior to the date of filing a brief, will not be entered because the affidavit or other evidence failed to overcome all rejections under appeal and/or appellant fails to provide a showing a good and sufficient reasons why it is necessary and was not earlier presented. See 37 CFR 41.33(d)(1).
10. ☐ The affidavit or other evidence is entered. An explanation of the status of the claims after entry is below or attached.

REQUEST FOR RECONSIDERATION/OTHER

11. ☒ The request for reconsideration has been considered but does NOT place the application in condition for allowance because: See Continuation Sheet.
12. ☐ Note the attached Information *Disclosure Statement*(s). (PTO/SB/08) Paper No(s). _____
13. ☐ Other: _____.

/Brian T. Pendleton/
Supervisory Patent Examiner, Art Unit 2425

/CAI CHEN/
Examiner, Art Unit 2425

Response to Arguments

Applicant's arguments filed 12/15/2009 have been fully considered but they are not persuasive.

Regarding claim 1, on the page 6-7 of the Remarks, applicant argues that none of the reference teaches that "a MAC layer that characterizes a channel and optimizes the channel between a node that includes the MAC laver and another node of a communication network,"

In response, the examiner respectfully disagrees, first of all, the exact claim language is "wherein the MAC layer utilizes at least one probe packet to characterize the at least one channel to the at least one node and optimizes at least one transmit packet based upon the characterization of the channel," and Sambamurthy discloses optimizes at least one transmit packet based upon the characterization of the channel (col. 5, lines 38-50, transmit cyclic redundancy check unit is used to perform integrity of the transmit packet thus optimizing the transmit packet for the communication channel). Mao teaches the limitation of the MAC layer utilizes at least one probe packet to characterize the at least one channel to the at least one node (col. 3, lines 43-52, this embodiment teaches that a probe packet is used to characterize the communication channel between transmitting node to receive node in order to broadcast the probe packet and to be received by the correct receiving node in the network protocol). In the Mao's embodiment, one of ordinary skill in the art would realize that characterizing the communication channel by a probe packet is required in order to perform a smooth communication between transmitting mode and receiving mode. It is suggested to applicant to amend the claim limitation to include a detail description of how the characterization of channel is performed and differs from the Mao's embodiment in order to advance the prosecution.

PTO/SB/30EFS (07-09)
Approved for use through 07/31/2012. OMB 0651-0031
U.S. Patent and Trademark Office; U.S. DEPARTMENT OF COMMERCE
Under the Paperwork Reduction Act of 1995, no persons are required to respond to a collection of information unless it contains a valid OMB control number.

REQUEST FOR CONTINUED EXAMINATION(RCE)TRANSMITTAL
(Submitted Only via EFS-Web)

Application Number	11/241,748	Filing Date	2005-09-29	Docket Number (if applicable)	E040004USU2	Art Unit	2425
First Named Inventor	Anton MONK			Examiner Name	Cai Y. Chen		

This is a Request for Continued Examination (RCE) under 37 CFR 1.114 of the above-identified application.
Request for Continued Examination (RCE) practice under 37 CFR 1.114 does not apply to any utility or plant application filed prior to June 8, 1995, or to any design application. The Instruction Sheet for this form is located at WWW.USPTO.GOV

SUBMISSION REQUIRED UNDER 37 CFR 1.114

Note: If the RCE is proper, any previously filed unentered amendments and amendments enclosed with the RCE will be entered in the order in which they were filed unless applicant instructs otherwise. If applicant does not wish to have any previously filed unentered amendment(s) entered, applicant must request non-entry of such amendment(s).

☐ Previously submitted. If a final Office action is outstanding, any amendments filed after the final Office action may be considered as a submission even if this box is not checked.

- ☐ Consider the arguments in the Appeal Brief or Reply Brief previously filed on _____
- ☐ Other _____

☒ Enclosed

- ☒ Amendment/Reply
- ☐ Information Disclosure Statement (IDS)
- ☐ Affidavit(s)/ Declaration(s)
- ☐ Other _____

MISCELLANEOUS

☐ Suspension of action on the above-identified application is requested under 37 CFR 1.103(c) for a period of months _____
(Period of suspension shall not exceed 3 months; Fee under 37 CFR 1.17(i) required)

☐ Other _____

FEES

The RCE fee under 37 CFR 1.17(e) is required by 37 CFR 1.114 when the RCE is filed.
☒ The Director is hereby authorized to charge any underpayment of fees, or credit any overpayments, to Deposit Account No 504613

SIGNATURE OF APPLICANT, ATTORNEY, OR AGENT REQUIRED

☒ Patent Practitioner Signature
☐ Applicant Signature

PTO/SB/30EFS (07-09)
Approved for use through 07/31/2012. OMB 0651-0031
U.S. Patent and Trademark Office; U.S. DEPARTMENT OF COMMERCE
Under the Paperwork Reduction Act of 1995, no persons are required to respond to a collection of information unless it contains a valid OMB control number.

Signature of Registered U.S. Patent Practitioner			
Signature	/Bruce W. Greenhaus/	Date (YYYY-MM-DD)	2010-02-04
Name	Bruce W. Greenhaus	Registration Number	37339

This collection of information is required by 37 CFR 1.114. The information is required to obtain or retain a benefit by the public which is to file (and by the USPTO to process) an application. Confidentiality is governed by 35 U.S.C. 122 and 37 CFR 1.11 and 1.14. This collection is estimated to take 12 minutes to complete, including gathering, preparing, and submitting the completed application form to the USPTO. Time will vary depending upon the individual case. Any comments on the amount of time you require to complete this form and/or suggestions for reducing this burden, should be sent to the Chief Information Officer, U.S. Patent and Trademark Office, U.S. Department of Commerce, P.O. Box 1450, Alexandria, VA 22313-1450.

If you need assistance in completing the form, call 1-800-PTO-9199 and select option 2.

Privacy Act Statement

The Privacy Act of 1974 (P.L. 93-579) requires that you be given certain information in connection with your submission of the attached form related to a patent application or patent. Accordingly, pursuant to the requirements of the Act, please be advised that: (1) the general authority for the collection of this information is 35 U.S.C. 2(b)(2); (2) furnishing of the information solicited is voluntary; and (3) the principal purpose for which the information is used by the U.S. Patent and Trademark Office is to process and/or examine your submission related to a patent application or patent. If you do not furnish the requested information, the U.S. Patent and Trademark Office may not be able to process and/or examine your submission, which may result in termination of proceedings or abandonment of the application or expiration of the patent.

The information provided by you in this form will be subject to the following routine uses:

1. The information on this form will be treated confidentially to the extent allowed under the Freedom of Information Act (5 U.S.C. 552) and the Privacy Act (5 U.S.C. 552a). Records from this system of records may be disclosed to the Department of Justice to determine whether the Freedom of Information Act requires disclosure of these records.

2. A record from this system of records may be disclosed, as a routine use, in the course of presenting evidence to a court, magistrate, or administrative tribunal, including disclosures to opposing counsel in the course of settlement negotiations.

3. A record in this system of records may be disclosed, as a routine use, to a Member of Congress submitting a request involving an individual, to whom the record pertains, when the individual has requested assistance from the Member with respect to the subject matter of the record.

4. A record in this system of records may be disclosed, as a routine use, to a contractor of the Agency having need for the information in order to perform a contract. Recipients of information shall be required to comply with the requirements of the Privacy Act of 1974, as amended, pursuant to 5 U.S.C. 552a(m).

5. A record related to an International Application filed under the Patent Cooperation Treaty in this system of records may be disclosed, as a routine use, to the International Bureau of the World Intellectual Property Organization, pursuant to the Patent Cooperation Treaty.

6. A record in this system of records may be disclosed, as a routine use, to another federal agency for purposes of National Security review (35 U.S.C. 181) and for review pursuant to the Atomic Energy Act (42 U.S.C. 218(c)).

7. A record from this system of records may be disclosed, as a routine use, to the Administrator, General Services, or his/her designee, during an inspection of records conducted by GSA as part of that agency's responsibility to recommend improvements in records management practices and programs, under authority of 44 U.S.C. 2904 and 2906. Such disclosure shall be made in accordance with the GSA regulations governing inspection of records for this purpose, and any other relevant (i.e., GSA or Commerce) directive. Such disclosure shall not be used to make determinations about individuals.

8. A record from this system of records may be disclosed, as a routine use, to the public after either publication of the application pursuant to 35 U.S.C. 122(b) or issuance of a patent pursuant to 35 U.S.C. 151. Further, a record may be disclosed, subject to the limitations of 37 CFR 1.14, as a routine use, to the public if the record was filed in an application which became abandoned or in which the proceedings were terminated and which application is referenced by either a published application, an application open to public inspections or an issued patent.

9. A record from this system of records may be disclosed, as a routine use, to a Federal, State, or local law enforcement agency, if the USPTO becomes aware of a violation or potential violation of law or regulation.

IN THE UNITED STATES PATENT AND TRADEMARK OFFICE

In Re Application of:
Monk, et al.

Serial No.: 11/241,748

Filed: 29 September 2005

For: Physical layer transmitter for use in a broadband local area network

Group Art Unit: 2425

Confirmation No. 2829

AMENDMENT

Mail Stop Amendment
Commissioner for Patents
P.O. Box 1450
Alexandria, VA 22313-1450

Attention: **Cai Y. Chen**
Examiner

Dear Sir:

In response to the Advisory Action of December 28, 2009, and submitted together with an associated Request for Continuing Examination, Applicants submit the following amendments, remarks and comments:

Claims begin on page 2 of this paper.

Remarks/Comments begin on page 7 of this paper.

I hereby certify that this correspondence is being electronically deposited with the Commissioner for Patents through the USPTO electronic filing system, on:

February 4, 2010
(Date of Deposit)

Tim Ellis
(Name of Person Making Deposit)

/Tim Ellis/
(Signature)

CLAIMS:

1. (Currently Amended) A modem for communication to at least one node across at least one channel of a coaxial network, the modem comprising:

a transmitter; and

a MAC layer in signal communication with the transmitter,

wherein the MAC layer utilizes at least one probe packet for network frequency response and modulation optimization ~~to characterize the at least one channel to the at least one node and optimizes at least one transmit packet based upon the characterization of the channel~~, and

wherein the transmitter communicates the at least one transmit packet.

2. (Original) The modem of claim 1, wherein the transmitter is a baseband transmitter.

3. (Original) The modem of claim 1, wherein the transmitter is a Radio Frequency ("RF") transmitter.

4. (Original) The modem of claim 1, wherein the packet communication utilizes services.

5. (Original) The modem of claim 1, wherein the transmitter communicates with at least one node utilizing packet communications using Time Division Duplex ("TDD").

6. (Original) The modem of claim 5, wherein the packet communication utilizes formatting that includes

a preamble; and

a packet of data.

7. (Previously Presented) The modem of claim 6, wherein the packet communications includes at least one robust packet.

8. (Cancelled)

9. (Original) The modem of claim 6, wherein the formatting includes packet encryption.

10. (Original) The modem of claim 6, wherein the scrambling formatting includes Reed Solomon ("RS") encoding.

11. (Original) The modem of claim 10, wherein the packet is padded to include an integral number of similar size and coding type RS codewords.

12. (Original) The modem of claim 6, wherein the formatting utilizes packet encryption.

13. (Original) (Previously Presented) The modem of claim 12, wherein the encryption utilizes Date Encryption Standard ("DES").

14. (Original) The modem of claim 1, wherein the transmitter utilizes orthogonal frequency division multiplexing ("OFDM") modulation.

15. (Original) The modem of claim 14, wherein the transmitter utilizes padding to utilize an integral number of OFDM symbols.

16. (Previously Presented) The modem of claim 1, wherein the MAC layer utilizes orthogonal frequency division multiplexing ("OFDM") bit-loading.

17. (Original) The modem of claim 16, wherein the formatting utilizes scrambling.

18. (Original) The modem of claim 17, wherein the scrambling is byte scrambling.

19. (Original) The modem of claim 18, wherein the scrambling is OFDM bin scrambling.

20. (Original) The modem of claim 14 wherein the transmitter utilizes a modulation type on each of its subcarriers chosen from the group consisting of:

bipolar phase shift keying ("BPSK");

quadrature phase shift keying ("QPSK");

8 quadrature amplitude modulation ("QAM");

16 QAM;

32 QAM;

64 QAM;

128 QAM; and

256 QAM.

21. (Original) The modem of claim 20, wherein the modulation type is obtained from a translation table that maps data to waveform data.

22. (Original) The modem of claim 21, wherein an amplitude factor is applied to the various modulation types.

23. (Original) The modem of claim 1, wherein the transmitter is capable of producing and transmitting a probe signal to the at least one node.

24. (Original) The modem of claim 1, wherein the transmitter is capable of producing a robust signal that includes redundant, repetitious subcarriers.

25. (Original) The modem of claim 24, wherein the transmitter transmits robust repetitious subcarriers according to a predetermined format.

26-45. (Cancelled)

46. (Newly Presented) A modem for communication to at least one node across at least one channel of a coaxial network, the modem comprising:

a transmitter; and

a MAC layer in signal communication with the transmitter,

wherein the MAC layer utilizes at least one probe packet as an IQ imbalance and hardware/RF optimization probe whose purpose is to be able to reduce hardware complexity and compensate for certain hardware imperfections; and

wherein the transmitter communicates the at least one transmit packet.

47. (Newly Presented) A modem for communication to at least one node across at least one channel of a coaxial network, the modem comprising:

a transmitter; and

a MAC layer in signal communication with the transmitter,

wherein the MAC layer utilizes at least one probe packet as an echo profile probe whose purpose is to measure node delay spread on the network in order to optimize the preamble and cyclic prefix requirements or other parameters; and

wherein the transmitter communicates the at least one transmit packet.

REMARKS/COMMENTS

Claims 1-7 and 9-25 were pending in the application. All pending claims were rejected. Claim 1 has been amended herein. Claims 46 and 47 have been added. Accordingly, Claims 1-7, 9-25, 46 and 47 are currently pending.

Discussion of Rejections Under 35 U.S.C. §103

Claims 1-8, 10-11, 14, 16-25, and 27-34 were rejected under 35 U.S.C. 103(a) as being unpatentable over Gurantz (US 2002/0166124 A1) in view of Sambamurthy (6,085,248) and Mao (7,302,700).

Applicants have amended the application to overcome the Examiner's rejections and now believe that all claims are in condition for allowance for the reasons provided herein.

Mao neither teaches nor suggests the use of a probe packet for network frequency response and modulation optimization. In particular, Mao (at col. 3, lines 43-52, cited by the Examiner) states that:

> In another aspect, the invention provides a method for switching packets in a communication network including receiving a packet at an interface of an L2 device, determining if a destination MAC address associated with the received packet is known and, if not, holding the received packet a predetermined amount of time without transferring the packet to any port of the L2 device, **creating a probe packet that includes the unknown MAC address and broadcasting the probe packet to all interfaces except the receiving interface**.(emphasis added)

Accordingly, there is nothing in Mao that relates to using the "probe packet" for the purposes recited in Claims 1, 46 and 47, as amended. In particular, Claim 46 recites the limitation that:

> wherein the MAC layer utilizes at least one probe packet as an IQ imbalance and hardware/RF optimization probe whose purpose is to be able to reduce hardware complexity and compensate for certain hardware imperfections….

Claim 47 recites the limitation that:

> the MAC layer utilizes at least one probe packet as an echo profile probe whose purpose is to measure node delay spread on the network in order to optimize the preamble and cyclic prefix requirements or other parameters

Accordingly, Applicants have added Claims 46 and 47 to further provide limitations that include a detail description of how the characterization of channel is performed and differs from the Mao's embodiment in order to advance the prosecution. Neither the limitation of Claim 46 nor the limitation of Claim 47 are taught or suggested by Mao, nor would one of ordinary skill in the art reasonably come to see these limitations as obvious without the use of impermissible hindsight.

Accordingly, Applicants believe that all claims are now in condition for allowance.

Applicants further believe that each of those claims that depend from Claim 1 is also in condition for allowance for at least the reason stated with regard to Claim 1.

CONCLUSION

Applicants believe that the proposed amendment will place all claims pending in the application in condition for allowance. Accordingly, Applicants respectfully request that the Examiner allow all claims.

This amendment is submitted together with a Request for Continuing Examination (RCE). The RCE has been submitted timely on February 4, 2010 (within 2 months of the mailing of a Notice of Appeal dated 15 December 2009); therefore, there should be no fees associated with this amendment.

If, however, there are any fees due in connection with the filing of the amendment, please charge the fees to our Deposit Account No. 50-4613. If a fee is required for an extension of time under 37 CFR 1.136, such an extension is requested and the fee should also be charged to our Deposit Account.

Respectfully submitted,

Dated: February 4, 2010

By: /Bruce W. Greenhaus/
Bruce W. Greenhaus
Attorney for Applicants
Registration No. 37,339

Entropic Communications, Inc.
6290 Sequence Drive
San Diego, California 92121
Telephone: (619) 980-2612
e-mail address: patentteam@entropic.com

Electronic Patent Application Fee Transmittal

Application Number:	11241748
Filing Date:	29-Sep-2005
Title of Invention:	Physical layer transmitter for use in a broadband local area network
First Named Inventor/Applicant Name:	Anton Monk
Filer:	Bruce Wayne Greenhaus/Tim Ellis
Attorney Docket Number:	E040004USU2

Filed as Large Entity

Utility under 35 USC 111(a) Filing Fees

Description	Fee Code	Quantity	Amount	Sub-Total in USD($)
Basic Filing:				
Pages:				
Claims:				
Miscellaneous-Filing:				
Petition:				
Patent-Appeals-and-Interference:				
Post-Allowance-and-Post-Issuance:				
Extension-of-Time:				

Description	Fee Code	Quantity	Amount	Sub-Total in USD($)
Miscellaneous:				
Request for continued examination	1801	1	810	810
		Total in USD ($)		**810**

Electronic Acknowledgement Receipt	
EFS ID:	6949559
Application Number:	11241748
International Application Number:	
Confirmation Number:	2829
Title of Invention:	Physical layer transmitter for use in a broadband local area network
First Named Inventor/Applicant Name:	Anton Monk
Customer Number:	78271
Filer:	Bruce Wayne Greenhaus/Tim Ellis
Filer Authorized By:	Bruce Wayne Greenhaus
Attorney Docket Number:	E040004USU2
Receipt Date:	04-FEB-2010
Filing Date:	29-SEP-2005
Time Stamp:	14:24:47
Application Type:	Utility under 35 USC 111(a)

Payment information:

Submitted with Payment	yes
Payment Type	Deposit Account
Payment was successfully received in RAM	$810
RAM confirmation Number	575
Deposit Account	504613
Authorized User	
The Director of the USPTO is hereby authorized to charge indicated fees and credit any overpayment as follows: Charge any Additional Fees required under 37 C.F.R. Section 1.17 (Patent application and reexamination processing fees) Charge any Additional Fees required under 37 C.F.R. Section 1.19 (Document supply fees)	

Charge any Additional Fees required under 37 C.F.R. Section 1.21 (Miscellaneous fees and charges)

File Listing:

Document Number	Document Description	File Name	File Size(Bytes)/ Message Digest	Multi Part /.zip	Pages (if appl.)
1	Request for Continued Examination (RCE)	E040004USU2_RCE_2-4-2010.pdf	797447 76e7f3808e2de1a6e8d87b2a1b49f09d0296adad	no	3
Warnings:					
Information:					
2	Amendment Submitted/Entered with Filing of CPA/RCE	E040004USU2_RCE-Amendment_2-4-2010.pdf	113058 9fd29481d313048ce36eb660d42cade3f190c3c1	no	9
Warnings:					
Information:					
3	Fee Worksheet (PTO-875)	fee-info.pdf	30313 4fda90a4e3341606bc6102a6e6fd783013eaf924	no	2
Warnings:					
Information:					
		Total Files Size (in bytes):	940818		

This Acknowledgement Receipt evidences receipt on the noted date by the USPTO of the indicated documents, characterized by the applicant, and including page counts, where applicable. It serves as evidence of receipt similar to a Post Card, as described in MPEP 503.

<u>New Applications Under 35 U.S.C. 111</u>
If a new application is being filed and the application includes the necessary components for a filing date (see 37 CFR 1.53(b)-(d) and MPEP 506), a Filing Receipt (37 CFR 1.54) will be issued in due course and the date shown on this Acknowledgement Receipt will establish the filing date of the application.

<u>National Stage of an International Application under 35 U.S.C. 371</u>
If a timely submission to enter the national stage of an international application is compliant with the conditions of 35 U.S.C. 371 and other applicable requirements a Form PCT/DO/EO/903 indicating acceptance of the application as a national stage submission under 35 U.S.C. 371 will be issued in addition to the Filing Receipt, in due course.

<u>New International Application Filed with the USPTO as a Receiving Office</u>
If a new international application is being filed and the international application includes the necessary components for an international filing date (see PCT Article 11 and MPEP 1810), a Notification of the International Application Number and of the International Filing Date (Form PCT/RO/105) will be issued in due course, subject to prescriptions concerning national security, and the date shown on this Acknowledgement Receipt will establish the international filing date of the application.

PTO/SB/06 (07-06)
Approved for use through 1/31/2007. OMB 0651-0032
U.S. Patent and Trademark Office; U.S. DEPARTMENT OF COMMERCE
Under the Paperwork Reduction Act of 1995, no persons are required to respond to a collection of information unless it displays a valid OMB control number.

PATENT APPLICATION FEE DETERMINATION RECORD

Substitute for Form PTO-875

Application or Docket Number	Filing Date	☐ To be Mailed
11/241,748	09/29/2005	

APPLICATION AS FILED – PART I

FOR	(Column 1) NUMBER FILED	(Column 2) NUMBER EXTRA	SMALL ENTITY ☐ RATE ($)	SMALL ENTITY FEE ($)	OR	OTHER THAN SMALL ENTITY RATE ($)	OTHER THAN SMALL ENTITY FEE ($)
☐ BASIC FEE (37 CFR 1.16(a), (b), or (c))	N/A	N/A	N/A			N/A	
☐ SEARCH FEE (37 CFR 1.16(k), (i), or (m))	N/A	N/A	N/A			N/A	
☐ EXAMINATION FEE (37 CFR 1.16(o), (p), or (q))	N/A	N/A	N/A			N/A	
TOTAL CLAIMS (37 CFR 1.16(i))	minus 20 =	*	X $ =		OR	X $ =	
INDEPENDENT CLAIMS (37 CFR 1.16(h))	minus 3 =	*	X $ =			X $ =	
☐ APPLICATION SIZE FEE (37 CFR 1.16(s))	If the specification and drawings exceed 100 sheets of paper, the application size fee due is $250 ($125 for small entity) for each additional 50 sheets or fraction thereof. See 35 U.S.C. 41(a)(1)(G) and 37 CFR 1.16(s).						
☐ MULTIPLE DEPENDENT CLAIM PRESENT (37 CFR 1.16(j))							
* If the difference in column 1 is less than zero, enter "0" in column 2.			TOTAL			TOTAL	

APPLICATION AS AMENDED – PART II

AMENDMENT 02/04/2010

	(Column 1) CLAIMS REMAINING AFTER AMENDMENT		(Column 2) HIGHEST NUMBER PREVIOUSLY PAID FOR	(Column 3) PRESENT EXTRA	SMALL ENTITY RATE ($)	SMALL ENTITY ADDITIONAL FEE ($)	OR	OTHER THAN SMALL ENTITY RATE ($)	OTHER THAN SMALL ENTITY ADDITIONAL FEE ($)
Total (37 CFR 1.16(i))	* 25	Minus	** 45	= 0	X $ =		OR	X $52=	0
Independent (37 CFR 1.16(h))	* 3	Minus	***3	= 0	X $ =		OR	X $220=	0
☐ Application Size Fee (37 CFR 1.16(s))									
☐ FIRST PRESENTATION OF MULTIPLE DEPENDENT CLAIM (37 CFR 1.16(j))							OR		
					TOTAL ADD'L FEE		OR	TOTAL ADD'L FEE	0

AMENDMENT

	(Column 1) CLAIMS REMAINING AFTER AMENDMENT		(Column 2) HIGHEST NUMBER PREVIOUSLY PAID FOR	(Column 3) PRESENT EXTRA	SMALL ENTITY RATE ($)	SMALL ENTITY ADDITIONAL FEE ($)	OR	OTHER THAN SMALL ENTITY RATE ($)	OTHER THAN SMALL ENTITY ADDITIONAL FEE ($)
Total (37 CFR 1.16(i))	*	Minus	**	=	X $ =		OR	X $ =	
Independent (37 CFR 1.16(h))	*	Minus	***	=	X $ =		OR	X $ =	
☐ Application Size Fee (37 CFR 1.16(s))									
☐ FIRST PRESENTATION OF MULTIPLE DEPENDENT CLAIM (37 CFR 1.16(j))							OR		
					TOTAL ADD'L FEE		OR	TOTAL ADD'L FEE	

* If the entry in column 1 is less than the entry in column 2, write "0" in column 3.
** If the "Highest Number Previously Paid For" IN THIS SPACE is less than 20, enter "20".
*** If the "Highest Number Previously Paid For" IN THIS SPACE is less than 3, enter "3".
The "Highest Number Previously Paid For" (Total or Independent) is the highest number found in the appropriate box in column 1.

Legal Instrument Examiner:
/GAIL D. D. WOOTEN/

This collection of information is required by 37 CFR 1.16. The information is required to obtain or retain a benefit by the public which is to file (and by the USPTO to process) an application. Confidentiality is governed by 35 U.S.C. 122 and 37 CFR 1.14. This collection is estimated to take 12 minutes to complete, including gathering, preparing, and submitting the completed application form to the USPTO. Time will vary depending upon the individual case. Any comments on the amount of time you require to complete this form and/or suggestions for reducing this burden, should be sent to the Chief Information Officer, U.S. Patent and Trademark Office, U.S. Department of Commerce, P.O. Box 1450, Alexandria, VA 22313-1450. DO NOT SEND FEES OR COMPLETED FORMS TO THIS ADDRESS. **SEND TO: Commissioner for Patents, P.O. Box 1450, Alexandria, VA 22313-1450.**
If you need assistance in completing the form, call 1-800-PTO-9199 and select option 2.

UNITED STATES PATENT AND TRADEMARK OFFICE

UNITED STATES DEPARTMENT OF COMMERCE
United States Patent and Trademark Office
Address: COMMISSIONER FOR PATENTS
P.O. Box 1450
Alexandria, Virginia 22313-1450
www.uspto.gov

APPLICATION NO.	FILING DATE	FIRST NAMED INVENTOR	ATTORNEY DOCKET NO.	CONFIRMATION NO.
11/241,748	09/29/2005	Anton Monk	E040004USU2	2829

78271 7590 03/29/2010
The Eclipse Group LLP
10605 Balboa Blvd
Suite 300
Granada Hills, CA 91344

EXAMINER
CHEN, CAI Y

ART UNIT	PAPER NUMBER
2425	

MAIL DATE	DELIVERY MODE
03/29/2010	PAPER

Please find below and/or attached an Office communication concerning this application or proceeding.

The time period for reply, if any, is set in the attached communication.

PTOL-90A (Rev. 04/07)

Office Action Summary	Application No.	Applicant(s)	
	11/241,748	MONK ET AL.	
	Examiner	Art Unit	
	CAI CHEN	2425	

-- The MAILING DATE of this communication appears on the cover sheet with the correspondence address --

Period for Reply

A SHORTENED STATUTORY PERIOD FOR REPLY IS SET TO EXPIRE 3 MONTH(S) OR THIRTY (30) DAYS, WHICHEVER IS LONGER, FROM THE MAILING DATE OF THIS COMMUNICATION.

- Extensions of time may be available under the provisions of 37 CFR 1.136(a). In no event, however, may a reply be timely filed after SIX (6) MONTHS from the mailing date of this communication.
- If NO period for reply is specified above, the maximum statutory period will apply and will expire SIX (6) MONTHS from the mailing date of this communication.
- Failure to reply within the set or extended period for reply will, by statute, cause the application to become ABANDONED (35 U.S.C. § 133). Any reply received by the Office later than three months after the mailing date of this communication, even if timely filed, may reduce any earned patent term adjustment. See 37 CFR 1.704(b).

Status

1)☒ Responsive to communication(s) filed on 04 February 2010.

2a)☐ This action is **FINAL**. 2b)☒ This action is non-final.

3)☐ Since this application is in condition for allowance except for formal matters, prosecution as to the merits is closed in accordance with the practice under *Ex parte Quayle*, 1935 C.D. 11, 453 O.G. 213.

Disposition of Claims

4)☒ Claim(s) 1-7,9-25,46 and 47 is/are pending in the application.

4a) Of the above claim(s) _____ is/are withdrawn from consideration.

5)☐ Claim(s) _____ is/are allowed.

6)☒ Claim(s) 1-7, 9-25, and 46-47 is/are rejected.

7)☐ Claim(s) _____ is/are objected to.

8)☐ Claim(s) _____ are subject to restriction and/or election requirement.

Application Papers

9)☐ The specification is objected to by the Examiner.

10)☐ The drawing(s) filed on _____ is/are: a)☐ accepted or b)☐ objected to by the Examiner.

Applicant may not request that any objection to the drawing(s) be held in abeyance. See 37 CFR 1.85(a).

Replacement drawing sheet(s) including the correction is required if the drawing(s) is objected to. See 37 CFR 1.121(d).

11)☐ The oath or declaration is objected to by the Examiner. Note the attached Office Action or form PTO-152.

Priority under 35 U.S.C. § 119

12)☐ Acknowledgment is made of a claim for foreign priority under 35 U.S.C. § 119(a)-(d) or (f).

a)☐ All b)☐ Some * c)☐ None of:

1.☐ Certified copies of the priority documents have been received.

2.☐ Certified copies of the priority documents have been received in Application No. _____.

3.☐ Copies of the certified copies of the priority documents have been received in this National Stage application from the International Bureau (PCT Rule 17.2(a)).

* See the attached detailed Office action for a list of the certified copies not received.

Attachment(s)

1) ☒ Notice of References Cited (PTO-892)
2) ☐ Notice of Draftsperson's Patent Drawing Review (PTO-948)
3) ☐ Information Disclosure Statement(s) (PTO/SB/08) Paper No(s)/Mail Date _____.
4) ☐ Interview Summary (PTO-413) Paper No(s)/Mail Date. _____ .
5) ☐ Notice of Informal Patent Application
6) ☐ Other: _____.

DETAILED ACTION

Response to Arguments

Applicant's arguments with respect to claim 1-7, 9-25, and 46-47 have been considered but are moot in view of the new ground(s) of rejection.

Claim Rejections - 35 USC § 103

1. The following is a quotation of 35 U.S.C. 103(a) which forms the basis for all obviousness rejections set forth in this Office action:

> (a) A patent may not be obtained though the invention is not identically disclosed or described as set forth in section 102 of this title, if the differences between the subject matter sought to be patented and the prior art are such that the subject matter as a whole would have been obvious at the time the invention was made to a person having ordinary skill in the art to which said subject matter pertains. Patentability shall not be negatived by the manner in which the invention was made.

2. Claim 1 is rejected under 35 U.S.C. 103(a) as being unpatentable over Bell (6,052,380) in view of Mao (7,302,700).

Regarding claim 1, Bell discloses a modem for communication to at least one node across a at least one channel coaxial network (Fig. 1 and 2, el. 200), the modem comprising:

a transmitter (Fig. 2, col. 7, lines 55-60);

a MAC layer in signal communication with the transmitter (col. 7, lines 61-col. 8, lines 67, Ethernet physical layer signal communication in the network),

wherein the MAC layer utilizes at least one probe packet for modulation optimization (col. 8, lines, DMT modulation)

Wherein the transmitter communicates the at least one transmit packets (Fig. 2, col. 7, lines 55-60).

Bell does not explicitly wherein the MAC layer utilizes at least one probe packet for network frequency response.

Mao teaches wherein the MAC layer utilizes at least one probe packet for network frequency response (col. 3, lines 48-65, utilizing the probe packet sent to all network interfaces and receives the response)

It would be obvious to one of ordinary in the art at the time of invention to modify Bell to include wherein the MAC layer utilizes at least one probe packet for network frequency response, as taught by Mao, in order to send the data packet to one of the network interface with unknown MAC address.

3. Claims 2-5, 10, 11, 14, 16-25 are rejected under 35 U.S.C. 103(a) as being unpatentable over Bell (6,052,380) in view of Mao (7,302,700) and further in view of Gurantz.

Regarding claim 2, Bell in view of Mao discloses all limitation of claim 1,

Bell in view of Mao does not explicitly discloses wherein the transmitter is a baseband transmitter,

Gurantz discloses wherein the transmitter is a baseband transmitter (Gurantz, para. 42, transmitting the baseband signal).

It would be obvious to one of ordinary in the art at the time of invention to modify Bell in view of Mao to include wherein the transmitter is a baseband

transmitter, as taught by Gurantz, in order to perform communication in baseband signal so the desirable signal can be decoded (para. 42).

Regarding claim 3, Bell in view of Mao and further in view of Gurantz discloses wherein the transmitter is a Radio Frequency ("RF") transmitter (Gurantz, para. 42 and 49).

Regarding claim 4, Bell in view of Mao and further in view of Gurantz wherein the packet communication utilizes services (MAO, col. 3, lines 48-65,).

Regarding claim 5, Bell in view of Mao and further in view of Gurantz further discloses wherein the transmitter communicates with at least one node using Time Division Duplex ("TDD") (Gurantz, para. 38-39)

Regarding claim 10, Bell in view of Mao discloses all limitation of claim 1,

Bell in view of Mao does not explicitly discloses wherein the scrambling formatting includes Reed Solomon ("RS") encoding,

Gurantz discloses wherein the scrambling formatting includes Reed Solomon ("RS") encoding (Gurantz, para. 53).

It would be obvious to one of ordinary in the art at the time of invention to modify Bell in view of Mao to include wherein the scrambling formatting includes Reed Solomon ("RS") encoding, as taught by Gurantz, in order to format the data in accordance IEEE standard.

Regarding claim 11, Bell in view of Mao and further in view of Gurantz further discloses disclose wherein the packet is padded to include an integral number of similar size and coding type RS codewords (Gurantz, para. 53).

Regarding claim 14, Bell in view of Mao and further in view of Gurantz discloses wherein the transmitter utilizes orthogonal frequency division multiplexing ("OFDM") modulation (Gurantz para. 46-49, para. 52-55).

Regarding claim 16, Bell in view of Mao and further in view of Gurantz discloses wherein the MAC layer utilizes orthogonal frequency division multiplexing ("OFDM") bit-loading (Gurantz para. 46-49, para. 52-55).

Regarding claim 17, Bell in view of Mao and further in view of Gurantz discloses wherein the formatting utilizes scrambling (Gurantz para. 46-49, para. 52-55, OFDM frequency bins scrambling).

Regarding claim 18 Bell in view of Mao and further in view of Gurantz discloses wherein the scrambling is byte scrambling (Gurantz para. 46-49, para. 52-55, OFDM frequency bins scrambling).

Regarding claim 19, Bell in view of Mao and further in view of Gurantz discloses wherein the scrambling is OFDM bin scrambling (Gurantz para. 46-49, para. 52-55, OFDM frequency bins scrambling).

Regarding claim 20, Bell in view of Mao and further in view of Gurantz discloses wherein the transmitter utilizes a modulation type

on each of its subcarriers chosen from the group consisting of: bipolar phase shift keying ("BPSK"); quadrature phase shift keying ("QPSK"); 8 quadrature amplitude modulation ("QAM"); 16 QAM; 32 QAM; 64 QAM; 128 QAM; and 256 QAM (Gurantz para. 49-50).

Regarding claim 21, Bell in view of Mao and further in view of Gurantz discloses wherein the modulation type is obtained from a translation table that maps data to waveform data (Gurantz para. 47-49, IDFT generates the OFDM waveforms data).

Regarding claim 22, Bell in view of Mao and further in view of Gurantz discloses wherein an amplitude factor is applied to the various modulation types (Gurantz para. 47-49).

Regarding claim 23, Bell in view of Mao and further in view of Gurantz discloses wherein the transmitter is capable of producing and transmitting a probe signal to the at least one node (Gurantz para. 20, the modem has a

transmitter capable of sending a probe signal during the communication with other within LAN).

Regarding claim 24, Bell in view of Mao and further in view of Gurantz discloses wherein the transmitter wherein the transmitter is capable of producing a robust signal that includes redundant, repetitious subcarriers (Gurantz para. 20, para. 49-53, the modem has a transmitter capable of producing a probe signal during the communication with other within LAN by using the method of OFDM, and in the process the OFDM will create multiple subcarrier representing by 1 or 0, therefore subcarrier 1 or 0 will repeat during OFDM process).

Regarding claim 25, Bell in view of Mao and further in view of Gurantz discloses wherein the transmitter transmits robust repetitious subcarriers according to a predetermined format (Gurantz para. 20, para. 49-53, the modem has a transmitter capable of producing a probe signal during the communication with other within LAN by using the method of OFDM format, and in the process the OFDM will create multiple subcarrier representing by 1 or 0, therefore subcarrier 1 or 0 will repeat during OFDM process, finally, the transmitter transmits the OFDM signal to LAN).

4. Claim 6 is rejected under 35 U.S.C. 103(a) as being unpatentable over Bell (6,052,380) in view of Mao (7,302,700) and further in view of Gurantz and further in view of Sambamurthy.

Regarding claim 6, Bell in view of Mao and further in view of Gurantz discloses all limitation of claim 5,

Bell in view of Mao and further in view of Gurantz does not discloses wherein the packet communication utilizes formatting that includes a preamble; and a packet of data

Sambamurthy teaches wherein the packet communication utilizes formatting that includes a preamble; and a packet of data (Sambamurthy, Fig. 1B, 5A, col. col. 5, lines 60-col. 6, line 12, col. 22, lines 5-53)

It would be obvious to one of ordinary in the art at the time of invention to modify Bell in view of Mao and further in view of Gurantz to include teaches wherein the packet communication utilizes formatting that includes a preamble; and a packet of data, as taught by Sambamurthy, in order to pass the control information to correction destination in parallel with data processing (col. 25-35).

5. Claim 7 is rejected under 35 U.S.C. 103(a) as being unpatentable over Bell (6,052,380) in view of Mao (7,302,700) and further in view of Gurantz and further in view of Orava (US 2002/0071477 A1).

Regarding claim 7, Bell in view of Mao and further in view of Gurantz and discloses all limitation of claim 5.

Bell in view of Mao and further in view of Gurantz does not explicitly disclose wherein the packet communication includes at least one robust packet.

Orava teaches wherein the packet communication includes at least one robust packet (Fig. 5A, para. 37, ID packets are the robust packet).

It would be obvious to one of ordinary in the art at the time of invention to modify Bell in view of Mao and further in view of Gurantz to include wherein the packet communication includes at least one robust packet, as taught by Orava, in order to effectively transmitting data packet with reduced error by using robust packet (para. 37).

6. Claims 9 and 12 are rejected under 35 U.S.C. 103(a) as being unpatentable over Bell in view of Mao and further in view of Gurantz and further in view of Sambamurthy and further in view of Kim (US 2004/0170157 A1).

Rearding claim 9, Bell in view of Mao and further in view of Gurantz and further in view of Sambamurthy discloses all limitation of claim 6. Bell in view of Mao and further in view of Gurantz and further in view of Sambamurthy further discloses providing conditionally access to the data packets (para. 42).

Bell in view of Mao and further in view of Gurantz and further in view of Sambamurthy does not explicitly disclose wherein the formatting includes packet encryption.

Kim teaches wherein the formatting includes packet encryption (para. 8, para. 12).

It would be obvious to one of ordinary in the art at the time of invention to modify Bell in view of Mao and further in view of Gurantz and further in view of

Sambamurthy to include wherein the formatting includes packet encryption, as taught by Kim, in order to protect the data packet from unauthorized usage.

Regarding claim 12, Bell in view of Mao and further in view of Gurantz and further in view of Sambamurthy and further in view of Kim teaches wherein the formatting utilizes packet encryption (Kim, para. 8, para. 12).

7. Claim 13 is rejected under 35 U.S.C. 103(a) as being unpatentable over Bell in view of Mao and further in view of Gurantz and further in view of Sambamurthy and further in view of Kim and further in view of Kim (US 2004/0170157 A1) and further in view of Fortenberry (6,005,939).

Regarding claim 13, Bell in view of Mao and further in view of Gurantz and further in view of Sambamurthy and further in view of Kim and further in view of Kim discloses all limitation of claim 12.

Bell in view of Mao and further in view of Gurantz and further in view of Sambamurthy and further in view of Kim and further in view of Kim does not explicitly discloses [wherein the encryption utilizes] Date Encryption Standard ("DES").

Fortenberry teaches [wherein the encryption utilizes] Date Encryption Standard ("DES") (col. 9, lines 43-47).

It would be obvious to one of ordinary in the art at the time of invention to modify Bell in view of Mao and further in view of Gurantz and further in view of

Sambamurthy and further in view of Kim and further in view of Kim to include wherein the encryption utilizes] Date Encryption Standard ("DES"), as taught by Fortenberry, in order to standardize the encryption method by using the industry wide know Encryption method in DES (col. 9, lines 43-47).

8. Claims 15 is rejected under 35 U.S.C. 103(a) as being unpatentable over Bell in view of Mao and further in view of Gurantz and further in view of Youge (6,522,650 B1).

Regarding claim 15, Bell in view of Mao and further in view of Gurantz discloses all limitation of claim 14, and further discloses wherein the transmitter utilizes OFDM applications.

Bell in view of Mao and further in view of Gurantz does not explicitly disclose [wherein the transmitter] utilizes padding [to utilize an integral number of OFDM symbols].

Youge teaches [wherein the transmitter] utilizes padding [to utilize an integral number of OFDM symbols] (Fig. 3, el. 114, col. 8, lines 22-39).

It would be obvious to one of ordinary in the art at the time of invention to modify Bell in view of Mao and further in view of Gurantz to include [wherein the transmitter] utilizes padding [to utilize an integral number of OFDM symbols], as taught by Youge, in order to provide a separation between two data block and indicates the ending of one data block.

9. Claim 46 is rejected under 35 U.S.C. 103(a) as being unpatentable over Bell (6,052,380) in view of Moorti (US 2007/0002878).

Regarding claim 46, Bell discloses a modem for communication to at least one node across a at least one channel coaxial network (Fig. 1 and 2, el. 200), the modem comprising:

a transmitter (Fig. 2, col. 7, lines 55-60);

a MAC layer in signal communication with the transmitter (col. 7, lines 61-col. 8, lines 67, Ethernet physical layer signal communication in the network),

wherein the MAC layer utilizes at least one probe packet for modulation optimization (col. 8, lines, DMT modulation)

Wherein the transmitter communicates the at least one transmit packets (Fig. 2, col. 7, lines 55-60).

Bell does not explicitly discloses wherein the MAC layer utilizes at least one probe packet as an IQ imbalance and hardware/RF optimization probe whose purpose is to be able to reduce hardware complexity and compensate for certain hardware imperfections

Moorti teaches wherein the MAC layer utilizes at least one probe packet as an IQ imbalance and hardware/RF optimization probe whose purpose is to be able to reduce hardware complexity and compensate for certain hardware imperfections (Fig. 4 and 9, para. 50, para. 79).

It would be obvious to one of ordinary in the art at the time of invention to modify Bell to include wherein the MAC layer utilizes at least one probe packet

as an IQ imbalance and hardware/RF optimization probe whose purpose is to be able to reduce hardware complexity and compensate for certain hardware imperfections, as taught by Moorti, in order to compensate the deficiency in the hardware module (abstract).

10. Claim 47 is rejected under 35 U.S.C. 103(a) as being unpatentable over Bell (6,052,380) in view of Kim (US 2004/0218557) and further in view of Goh (US 7,542,411 B1).

Regarding claim 1, Bell discloses a modem for communication to at least one node across a at least one channel coaxial network (Fig. 1 and 2, el. 200), the modem comprising:

a transmitter (Fig. 2, col. 7, lines 55-60);

a MAC layer in signal communication with the transmitter (col. 7, lines 61-col. 8, lines 67, Ethernet physical layer signal communication in the network),

wherein the MAC layer utilizes at least one probe packet for modulation optimization (col. 8, lines, DMT modulation)

Wherein the transmitter communicates the at least one transmit packets (Fig. 2, col. 7, lines 55-60).

Bell does not explicitly wherein the MAC layer utilizes at least one probe packet as an echo profile probe whose purpose is to measure node delay spread on the network in order to optimize the preamble and cyclic prefix requirements or other parameters;

Kim teaches wherein the MAC layer utilizes at least one probe packet whose purpose is to measure node delay spread on the network (para. 8-11, node delay).

It would be obvious to one of ordinary in the art at the time of invention to modify Bell to include wherein the MAC layer utilizes at least one probe packet whose purpose is to measure node delay spread on the network, as taught by Kim, in order to find the optimum route in the MAC layer routing protocol (para. 11).

Bell in view of Kim does not explicitly discloses MAC layer utilizes at least on probe packets as an echo profile probe to optimized the preamble and cyclic prefix requirements or other parameters,

Goh teaches discloses on probe packets as an echo profile probe to optimized the preamble and cyclic prefix requirements or other parameters (Fig. 4, col. 3, lines 31-50)

It would be obvious to one of ordinary in the art at the time of invention to modify Bell to include on probe packets as an echo profile probe to optimized the preamble and cyclic prefix requirements or other parameters, as taught by Goh, in order for a system to attain optimum communication (abstract).

Conclusion

Any inquiry concerning this communication or earlier communications from the examiner should be directed to CAI CHEN whose telephone number is (571)270-5679. The examiner can normally be reached on 7:30 am to 4:30 pm.

If attempts to reach the examiner by telephone are unsuccessful, the examiner's supervisor, Brian Pendleton can be reached on 571-272-7527. The fax phone number for the organization where this application or proceeding is assigned is 571-273-8300.

Information regarding the status of an application may be obtained from the Patent Application Information Retrieval (PAIR) system. Status information for published applications may be obtained from either Private PAIR or Public PAIR. Status information for unpublished applications is available through Private PAIR only. For more information about the PAIR system, see http://pair-direct.uspto.gov. Should you have questions on access to the Private PAIR system, contact the Electronic Business Center (EBC) at 866-217-9197 (toll-free). If you would like assistance from a USPTO Customer Service Representative or access to the automated information system, call 800-786-9199 (IN USA OR CANADA) or 571-272-1000.

/CAI CHEN/
Examiner, Art Unit 2425

/Brian T. Pendleton/
Supervisory Patent Examiner, Art Unit 2425

Notice of References Cited	Application/Control No. 11/241,748	Applicant(s)/Patent Under Reexamination MONK ET AL.	
	Examiner CAI CHEN	Art Unit 2425	Page 1 of 1

U.S. PATENT DOCUMENTS

*		Document Number Country Code-Number-Kind Code	Date MM-YYYY	Name	Classification
*	A	US-6,052,380	04-2000	Bell, Russell W.	370/445
*	B	US-2004/0218557	11-2004	Kim et al.	370/312
*	C	US-7,542,411	06-2009	Goh et al.	370/208
*	D	US-6,085,248	07-2000	Sambamurthy et al.	709/229
*	E	US-2007/0002878	01-2007	Moorti et al.	370/401
	F	US-			
	G	US-			
	H	US-			
	I	US-			
	J	US-			
	K	US-			
	L	US-			
	M	US-			

FOREIGN PATENT DOCUMENTS

*		Document Number Country Code-Number-Kind Code	Date MM-YYYY	Country	Name	Classification
	N					
	O					
	P					
	Q					
	R					
	S					
	T					

NON-PATENT DOCUMENTS

*		Include as applicable: Author, Title Date, Publisher, Edition or Volume, Pertinent Pages)
	U	
	V	
	W	
	X	

*A copy of this reference is not being furnished with this Office action. (See MPEP § 707.05(a).)
Dates in MM-YYYY format are publication dates. Classifications may be US or foreign.

Index of Claims	Application/Control No.	Applicant(s)/Patent Under Reexamination
	11241748	MONK ET AL.
	Examiner	**Art Unit**
	CAI CHEN	2425

✓	Rejected	-	Cancelled	N	Non-Elected	A	Appeal
=	Allowed	÷	Restricted	I	Interference	O	Objected

☐ Claims renumbered in the same order as presented by applicant ☐ CPA ☐ T.D. ☐ R.1.47

CLAIM		DATE								
Final	Original	03/20/2009	09/05/2009	03/17/2010						
	1	✓	✓	✓						
	2	✓	✓	✓						
	3	✓	✓	✓						
	4	✓	✓	✓						
	5	✓	✓	✓						
	6	✓	✓	✓						
	7	✓	✓	✓						
	8	✓	-	✓						
	9	✓	✓	✓						
	10	✓	✓	✓						
	11	✓	✓	✓						
	12	✓	✓	✓						
	13	✓	✓	✓						
	14	✓	✓	✓						
	15	✓	✓	✓						
	16	✓	✓	✓						
	17	✓	✓	✓						
	18	✓	✓	✓						
	19	✓	✓	✓						
	20	✓	✓	✓						
	21	✓	✓	✓						
	22	✓	✓	✓						
	23	✓	✓	✓						
	24	✓	✓	✓						
	25	✓	✓	✓						
	26	✓	-	-						
	27	✓	-	-						
	28	✓	-	-						
	29	✓	-	-						
	30	✓	-	-						
	31	✓	-	-						
	32	✓	-	-						
	33	✓	-	-						
	34	✓	-	-						
	35	✓	-	-						
	36	✓	-	-						

Index of Claims	Application/Control No.	Applicant(s)/Patent Under Reexamination
	11241748	MONK ET AL.
	Examiner	**Art Unit**
	CAI CHEN	2425

✓	Rejected	-	Cancelled	N	Non-Elected	A	Appeal
=	Allowed	÷	Restricted	I	Interference	O	Objected

☐ Claims renumbered in the same order as presented by applicant ☐ CPA ☐ T.D. ☐ R.1.47

CLAIM		DATE								
Final	Original	03/20/2009	09/05/2009	03/17/2010						
	37	✓	-	-						
	38	✓	-	-						
	39	✓	-	-						
	40	✓	-	-						
	41	✓	-	-						
	42	✓	-	-						
	43	✓	-	-						
	44	✓	-	-						
	45	✓	-	-						
	46			✓						
	47			✓						

Search Notes	Application/Control No.	Applicant(s)/Patent Under Reexamination
	11241748	MONK ET AL.
	Examiner	**Art Unit**
	CAI CHEN	2425

SEARCHED			
Class	**Subclass**	**Date**	**Examiner**

SEARCH NOTES		
Search Notes	**Date**	**Examiner**
Inventor Searches were performed in East	3/20/2009	cc
Class 725 and 370 are text searches	3/20/2009	cc

INTERFERENCE SEARCH			
Class	**Subclass**	**Date**	**Examiner**

PTO/SB/81 (01-09)
Approved for use through 11/30/2011. OMB 0651-0035
U.S. Patent and Trademark Office; U.S. DEPARTMENT OF COMMERCE
Under the Paperwork Reduction Act of 1995, no persons are required to respond to a collection of information unless it displays a valid OMB control number.

POWER OF ATTORNEY OR REVOCATION OF POWER OF ATTORNEY WITH A NEW POWER OF ATTORNEY AND CHANGE OF CORRESPONDENCE ADDRESS

Application Number	11/241,748
Filing Date	29-Sep-2005
First Named Inventor	Anton Monk
Title	Physical layer transmitter for use in a bro
Art Unit	2425
Examiner Name	Cai Y. Chen
Attorney Docket Number	E040004USU2

I hereby revoke all previous powers of attorney given in the above-identified application.

☐ A Power of Attorney is submitted herewith.

OR

☒ I hereby appoint Practitioner(s) associated with the following Customer Number as my/our attorney(s) or agent(s) to prosecute the application identified above, and to transact all business in the United States Patent and Trademark Office connected therewith: 77330

OR

☐ I hereby appoint Practitioner(s) named below as my/our attorney(s) or agent(s) to prosecute the application identified above, and to transact all business in the United States Patent and Trademark Office connected therewith:

Practitioner(s) Name	Registration Number

Please recognize or change the correspondence address for the above-identified application to:

☒ The address associated with the above-mentioned Customer Number.

OR

☐ The address associated with Customer Number:

OR

☐ Firm or Individual Name					
Address					
City		State		Zip	
Country					
Telephone		Email			

I am the:

☐ Applicant/Inventor.

OR

☒ Assignee of record of the entire interest. See 37 CFR 3.71.
Statement under 37 CFR 3.73(b) (Form PTO/SB/96) submitted herewith or filed on 08-Mar-2006.

SIGNATURE of Applicant or Assignee of Record

Signature	/Bruce W. Greenhaus/	Date	08-Apr-2010
Name	Bruce W. Greenhaus	Telephone	(619) 980-2612
Title and Company	V.P. Chief Patent Counsel, Entropic Communications, Inc.		

NOTE: Signatures of all the inventors or assignees of record of the entire interest or their representative(s) are required. Submit multiple forms if more than one signature is required, see below*.

☒ *Total of Two forms are submitted.

This collection of information is required by 37 CFR 1.31, 1.32 and 1.33. The information is required to obtain or retain a benefit by the public which is to file (and by the USPTO to process) an application. Confidentiality is governed by 35 U.S.C. 122 and 37 CFR 1.11 and 1.14. This collection is estimated to take 3 minutes to complete, including gathering, preparing, and submitting the completed application form to the USPTO. Time will vary depending upon the individual case. Any comments on the amount of time you require to complete this form and/or suggestions for reducing this burden, should be sent to the Chief Information Officer, U.S. Patent and Trademark Office, U.S. Department of Commerce, P.O. Box 1450, Alexandria, VA 22313-1450. DO NOT SEND FEES OR COMPLETED FORMS TO THIS ADDRESS. **SEND TO: Commissioner for Patents, P.O. Box 1450, Alexandria, VA 22313-1450.**

If you need assistance in completing the form, call 1-800-PTO-9199 and select option 2.

Privacy Act Statement

The Privacy Act of 1974 (P.L. 93-579) requires that you be given certain information in connection with your submission of the attached form related to a patent application or patent. Accordingly, pursuant to the requirements of the Act, please be advised that: (1) the general authority for the collection of this information is 35 U.S.C. 2(b)(2); (2) furnishing of the information solicited is voluntary; and (3) the principal purpose for which the information is used by the U.S. Patent and Trademark Office is to process and/or examine your submission related to a patent application or patent. If you do not furnish the requested information, the U.S. Patent and Trademark Office may not be able to process and/or examine your submission, which may result in termination of proceedings or abandonment of the application or expiration of the patent.

The information provided by you in this form will be subject to the following routine uses:

1. The information on this form will be treated confidentially to the extent allowed under the Freedom of Information Act (5 U.S.C. 552) and the Privacy Act (5 U.S.C 552a). Records from this system of records may be disclosed to the Department of Justice to determine whether disclosure of these records is required by the Freedom of Information Act.
2. A record from this system of records may be disclosed, as a routine use, in the course of presenting evidence to a court, magistrate, or administrative tribunal, including disclosures to opposing counsel in the course of settlement negotiations.
3. A record in this system of records may be disclosed, as a routine use, to a Member of Congress submitting a request involving an individual, to whom the record pertains, when the individual has requested assistance from the Member with respect to the subject matter of the record.
4. A record in this system of records may be disclosed, as a routine use, to a contractor of the Agency having need for the information in order to perform a contract. Recipients of information shall be required to comply with the requirements of the Privacy Act of 1974, as amended, pursuant to 5 U.S.C. 552a(m).
5. A record related to an International Application filed under the Patent Cooperation Treaty in this system of records may be disclosed, as a routine use, to the International Bureau of the World Intellectual Property Organization, pursuant to the Patent Cooperation Treaty.
6. A record in this system of records may be disclosed, as a routine use, to another federal agency for purposes of National Security review (35 U.S.C. 181) and for review pursuant to the Atomic Energy Act (42 U.S.C. 218(c)).
7. A record from this system of records may be disclosed, as a routine use, to the Administrator, General Services, or his/her designee, during an inspection of records conducted by GSA as part of that agency's responsibility to recommend improvements in records management practices and programs, under authority of 44 U.S.C. 2904 and 2906. Such disclosure shall be made in accordance with the GSA regulations governing inspection of records for this purpose, and any other relevant (i.e., GSA or Commerce) directive. Such disclosure shall not be used to make determinations about individuals.
8. A record from this system of records may be disclosed, as a routine use, to the public after either publication of the application pursuant to 35 U.S.C. 122(b) or issuance of a patent pursuant to 35 U.S.C. 151. Further, a record may be disclosed, subject to the limitations of 37 CFR 1.14, as a routine use, to the public if the record was filed in an application which became abandoned or in which the proceedings were terminated and which application is referenced by either a published application, an application open to public inspection or an issued patent.
9. A record from this system of records may be disclosed, as a routine use, to a Federal, State, or local law enforcement agency, if the USPTO becomes aware of a violation or potential violation of law or regulation.

PTO/SB/96 (07-09)
Approved for use through 07/31/2012. OMB 0651-0031
U.S. Patent and Trademark Office; U.S. DEPARTMENT OF COMMERCE
Under the Paperwork Reduction Act of 1995, no persons are required to respond to a collection of information unless it displays a valid OMB control number.

STATEMENT UNDER 37 CFR 3.73(b)

Applicant/Patent Owner: Entropic Communications, Inc.

Application No./Patent No.: 11/241,748 Filed/Issue Date: 29-Sep-2005

Titled:
Physical layer transmitter for use in a broadband local area network

Entropic Communications, Inc. , a Corporation
(Name of Assignee) (Type of Assignee, e.g., corporation, partnership, university, government agency, etc.

states that it is:

1. ☒ the assignee of the entire right, title, and interest in;

2. ☐ an assignee of less than the entire right, title, and interest in
(The extent (by percentage) of its ownership interest is _____ %); or

3. ☐ the assignee of an undivided interest in the entirety of (a complete assignment from one of the joint inventors was made)

the patent application/patent identified above, by virtue of either:

A. ☒ An assignment from the inventor(s) of the patent application/patent identified above. The assignment was recorded in the United States Patent and Trademark Office at Reel 017319, Frame 0389, or for which a copy therefore is attached.

OR

B. ☐ A chain of title from the inventor(s), of the patent application/patent identified above, to the current assignee as follows:

1. From: _____ To: _____
The document was recorded in the United States Patent and Trademark Office at
Reel _____, Frame _____, or for which a copy thereof is attached.

2. From: _____ To: _____
The document was recorded in the United States Patent and Trademark Office at
Reel _____, Frame _____, or for which a copy thereof is attached.

3. From: _____ To: _____
The document was recorded in the United States Patent and Trademark Office at
Reel _____, Frame _____, or for which a copy thereof is attached.

☐ Additional documents in the chain of title are listed on a supplemental sheet(s).

☒ As required by 37 CFR 3.73(b)(1)(i), the documentary evidence of the chain of title from the original owner to the assignee was, or concurrently is being, submitted for recordation pursuant to 37 CFR 3.11.

[NOTE: A separate copy (*i.e.*, a true copy of the original assignment document(s)) must be submitted to Assignment Division in accordance with 37 CFR Part 3, to record the assignment in the records of the USPTO. See MPEP 302.08]

The undersigned (whose title is supplied below) is authorized to act on behalf of the assignee.

/Bruce W. Greenhaus/ — Signature
08-Apr-2010 — Date

Bruce W. Greenhaus — Printed or Typed Name
V.P. Chief Patent Counsel — Title

This collection of information is required by 37 CFR 3.73(b). The information is required to obtain or retain a benefit by the public which is to file (and by the USPTO to process) an application. Confidentiality is governed by 35 U.S.C. 122 and 37 CFR 1.11 and 1.14. This collection is estimated to take 12 minutes to complete, including gathering, preparing, and submitting the completed application form to the USPTO. Time will vary depending upon the individual case. Any comments on the amount of time you require to complete this form and/or suggestions for reducing this burden, should be sent to the Chief Information Officer, U.S. Patent and Trademark Office, U.S. Department of Commerce, P.O. Box 1450, Alexandria, VA 22313-1450. DO NOT SEND FEES OR COMPLETED FORMS TO THIS ADDRESS. **SEND TO: Commissioner for Patents, P.O. Box 1450, Alexandria, VA 22313-1450.**

If you need assistance in completing the form, call 1-800-PTO-9199 and select option 2.

Privacy Act Statement

The **Privacy Act of 1974 (P.L. 93-579)** requires that you be given certain information in connection with your submission of the attached form related to a patent application or patent. Accordingly, pursuant to the requirements of the Act, please be advised that: (1) the general authority for the collection of this information is 35 U.S.C. 2(b)(2); (2) furnishing of the information solicited is voluntary; and (3) the principal purpose for which the information is used by the U.S. Patent and Trademark Office is to process and/or examine your submission related to a patent application or patent. If you do not furnish the requested information, the U.S. Patent and Trademark Office may not be able to process and/or examine your submission, which may result in termination of proceedings or abandonment of the application or expiration of the patent.

The information provided by you in this form will be subject to the following routine uses:

1. The information on this form will be treated confidentially to the extent allowed under the Freedom of Information Act (5 U.S.C. 552) and the Privacy Act (5 U.S.C 552a). Records from this system of records may be disclosed to the Department of Justice to determine whether disclosure of these records is required by the Freedom of Information Act.
2. A record from this system of records may be disclosed, as a routine use, in the course of presenting evidence to a court, magistrate, or administrative tribunal, including disclosures to opposing counsel in the course of settlement negotiations.
3. A record in this system of records may be disclosed, as a routine use, to a Member of Congress submitting a request involving an individual, to whom the record pertains, when the individual has requested assistance from the Member with respect to the subject matter of the record.
4. A record in this system of records may be disclosed, as a routine use, to a contractor of the Agency having need for the information in order to perform a contract. Recipients of information shall be required to comply with the requirements of the Privacy Act of 1974, as amended, pursuant to 5 U.S.C. 552a(m).
5. A record related to an International Application filed under the Patent Cooperation Treaty in this system of records may be disclosed, as a routine use, to the International Bureau of the World Intellectual Property Organization, pursuant to the Patent Cooperation Treaty.
6. A record in this system of records may be disclosed, as a routine use, to another federal agency for purposes of National Security review (35 U.S.C. 181) and for review pursuant to the Atomic Energy Act (42 U.S.C. 218(c)).
7. A record from this system of records may be disclosed, as a routine use, to the Administrator, General Services, or his/her designee, during an inspection of records conducted by GSA as part of that agency's responsibility to recommend improvements in records management practices and programs, under authority of 44 U.S.C. 2904 and 2906. Such disclosure shall be made in accordance with the GSA regulations governing inspection of records for this purpose, and any other relevant (*i.e.*, GSA or Commerce) directive. Such disclosure shall not be used to make determinations about individuals.
8. A record from this system of records may be disclosed, as a routine use, to the public after either publication of the application pursuant to 35 U.S.C. 122(b) or issuance of a patent pursuant to 35 U.S.C. 151. Further, a record may be disclosed, subject to the limitations of 37 CFR 1.14, as a routine use, to the public if the record was filed in an application which became abandoned or in which the proceedings were terminated and which application is referenced by either a published application, an application open to public inspection or an issued patent.
9. A record from this system of records may be disclosed, as a routine use, to a Federal, State, or local law enforcement agency, if the USPTO becomes aware of a violation or potential violation of law or regulation.

Electronic Acknowledgement Receipt

EFS ID:	7380498
Application Number:	11241748
International Application Number:	
Confirmation Number:	2829
Title of Invention:	Physical layer transmitter for use in a broadband local area network
First Named Inventor/Applicant Name:	Anton Monk
Customer Number:	78271
Filer:	Bruce Wayne Greenhaus/Tim Ellis
Filer Authorized By:	Bruce Wayne Greenhaus
Attorney Docket Number:	E040004USU2
Receipt Date:	08-APR-2010
Filing Date:	29-SEP-2005
Time Stamp:	18:04:39
Application Type:	Utility under 35 USC 111(a)

Payment information:

Submitted with Payment	no

File Listing:

Document Number	Document Description	File Name	File Size(Bytes)/ Message Digest	Multi Part /.zip	Pages (if appl.)
1	Power of Attorney	E040004USU2_POA_4-8-2010.pdf	1465655 9488503a1d04e37a7a4317e66c8a071f0c133e8e	no	2

Warnings:

Information:

2	Assignee showing of ownership per 37 CFR 3.73(b).	E040004USU2_3-73b_Statement_4-8-2010.pdf	423299 57284a276de22e51b7192f3fb9e18bdc9bafeb1d	no	2
Warnings:					
Information:					
			Total Files Size (in bytes):	1888954	

This Acknowledgement Receipt evidences receipt on the noted date by the USPTO of the indicated documents, characterized by the applicant, and including page counts, where applicable. It serves as evidence of receipt similar to a Post Card, as described in MPEP 503.

<u>New Applications Under 35 U.S.C. 111</u>
If a new application is being filed and the application includes the necessary components for a filing date (see 37 CFR 1.53(b)-(d) and MPEP 506), a Filing Receipt (37 CFR 1.54) will be issued in due course and the date shown on this Acknowledgement Receipt will establish the filing date of the application.

<u>National Stage of an International Application under 35 U.S.C. 371</u>
If a timely submission to enter the national stage of an international application is compliant with the conditions of 35 U.S.C. 371 and other applicable requirements a Form PCT/DO/EO/903 indicating acceptance of the application as a national stage submission under 35 U.S.C. 371 will be issued in addition to the Filing Receipt, in due course.

<u>New International Application Filed with the USPTO as a Receiving Office</u>
If a new international application is being filed and the international application includes the necessary components for an international filing date (see PCT Article 11 and MPEP 1810), a Notification of the International Application Number and of the International Filing Date (Form PCT/RO/105) will be issued in due course, subject to prescriptions concerning national security, and the date shown on this Acknowledgement Receipt will establish the international filing date of the application.

UNITED STATES PATENT AND TRADEMARK OFFICE

UNITED STATES DEPARTMENT OF COMMERCE
United States Patent and Trademark Office
Address: COMMISSIONER FOR PATENTS
P.O. Box 1450
Alexandria, Virginia 22313-1450
www.uspto.gov

APPLICATION NUMBER	FILING OR 371(C) DATE	FIRST NAMED APPLICANT	ATTY. DOCKET NO./TITLE
11/241,748	09/29/2005	Anton Monk	E040004USU2

CONFIRMATION NO. 2829

77330
ENTROPIC COMMUNICATIONS, INC.
6290 SEQUENCE DRIVE
SAN DIEGO, CA 92121

POA ACCEPTANCE LETTER

OC000000041117010

Date Mailed: 04/19/2010

NOTICE OF ACCEPTANCE OF POWER OF ATTORNEY

This is in response to the Power of Attorney filed 04/08/2010.

The Power of Attorney in this application is accepted. Correspondence in this application will be mailed to the above address as provided by 37 CFR 1.33.

/atesfai/

Office of Data Management, Application Assistance Unit (571) 272-4000, or (571) 272-4200, or 1-888-786-0101

UNITED STATES PATENT AND TRADEMARK OFFICE

UNITED STATES DEPARTMENT OF COMMERCE
United States Patent and Trademark Office
Address: COMMISSIONER FOR PATENTS
P.O. Box 1450
Alexandria, Virginia 22313-1450
www.uspto.gov

APPLICATION NUMBER	FILING OR 371(C) DATE	FIRST NAMED APPLICANT	ATTY. DOCKET NO./TITLE
11/241,748	09/29/2005	Anton Monk	E040004USU2

CONFIRMATION NO. 2829

POWER OF ATTORNEY NOTICE

78271
The Eclipse Group LLP
10605 Balboa Blvd
Suite 300
Granada Hills, CA 91344

OC000000041116988

Date Mailed: 04/19/2010

NOTICE REGARDING CHANGE OF POWER OF ATTORNEY

This is in response to the Power of Attorney filed 04/08/2010.

- The Power of Attorney to you in this application has been revoked by the assignee who has intervened as provided by 37 CFR 3.71. Future correspondence will be mailed to the new address of record(37 CFR 1.33).

/atesfai/

Office of Data Management, Application Assistance Unit (571) 272-4000, or (571) 272-4200, or 1-888-786-0101

IN THE UNITED STATES PATENT AND TRADEMARK OFFICE

In re Patent Application of: Anton Monk *et al.*	Docket No.: 05JM-156001 (E040004USU2)
Application No.: 11/241,748	Confirmation No.: 2829
Filed: September 29, 2005	Art Unit: 2425
For: PHYSICAL LAYER TRANSMITTER FOR USE IN A BROADBAND LOCAL AREA NETWORK	Examiner: Chen, Cai Y.

AMENDMENT AND REPLY UNDER 37 C.F.R. § 1.111

Mail Stop: Amendment
Commissioner for Patents
P.O. Box 1450
Alexandria, VA 22313-1450

INTRODUCTORY COMMENTS

The following is filed in response to the Office Action, mailed March 29, 2010, deadline for which to respond is extended by 1 month to July 29, 2010, in view of the attached petition for time extension. Claims 1-7, 9-25, 46 and 47 stand rejected in this application. Careful consideration has been given to the grounds for rejection, and the following amendment and discussion are offered in response. Reconsideration is respectfully requested.

Amendments to the Claims begin on page 2 of this paper.

Remarks/Arguments begin on page 7 of this paper.

AMENDMENTS TO THE CLAIMS

Please amend the claims as follows. This listing of claims will replace all prior versions of claims in the application.

1. (Currently Amended) A modem for communication to at least one node across at least one channel of a coaxial network, the modem comprising:

a transmitter; and

a MAC layer in signal communication with the transmitter,

wherein the MAC layer utilizes at least one probe packet for computing a network frequency response characterizing a first channel of the coaxial network and determining modulation optimization for the first channel based on the network frequency response, and

wherein the transmitter communicates the at least one transmit packet.

2. (Original) The modem of claim 1, wherein the transmitter is a baseband transmitter.

3. (Original) The modem of claim 1, wherein the transmitter is a Radio Frequency ("RF") transmitter.

4. (Original) The modem of claim 1, wherein the packet communication utilizes services.

5. (Original) The modem of claim 1, wherein the transmitter communicates with at least one node utilizing packet communications using Time Division Duplex ("TDD").

6. (Original) The modem of claim 5, wherein the packet communication utilizes formatting that includes

a preamble; and

a packet of data.

7. (Previously Presented) The modem of claim 6, wherein the packet communications includes at least one robust packet.

8. (Previously Canceled)

9. (Original) The modem of claim 6, wherein the formatting includes packet encryption.

10. (Original) The modem of claim 6, wherein the scrambling formatting includes Reed Solomon ("RS") encoding.

11. (Original) The modem of claim 10, wherein the packet is padded to include an integral number of similar size and coding type RS codewords.

12. (Original) The modem of claim 6, wherein the formatting utilizes packet encryption.

13. (Previously Presented) The modem of claim 12, wherein the encryption utilizes Date Encryption Standard ("DES").

14. (Original) The modem of claim 1, wherein the transmitter utilizes orthogonal frequency division multiplexing ("OFDM") modulation.

15. (Original) The modem of claim 14, wherein the transmitter utilizes padding to utilize an integral number of OFDM symbols.

16. (Previously Presented) The modem of claim 1, wherein the MAC layer utilizes orthogonal frequency division multiplexing ("OFDM") bit-loading.

17. (Original) The modem of claim 16, wherein the formatting utilizes scrambling.

18. (Original) The modem of claim 17, wherein the scrambling is byte scrambling.

19. (Original) The modem of claim 18, wherein the scrambling is OFDM bin scrambling.

20. (Original) The modem of claim 14 wherein the transmitter utilizes a modulation type on each of its subcarriers chosen from the group consisting of:

bipolar phase shift keying ("BPSK");

quadrature phase shift keying ("QPSK");

8 quadrature amplitude modulation ("QAM");

16 QAM;

32 QAM;

64 QAM;

128 QAM; and

256 QAM.

21. (Original) The modem of claim 20, wherein the modulation type is obtained from a translation table that maps data to waveform data.

22. (Original) The modem of claim 21, wherein an amplitude factor is applied to the various modulation types.

23. (Original) The modem of claim 1, wherein the transmitter is capable of producing and transmitting a probe signal to the at least one node.

24. (Original) The modem of claim 1, wherein the transmitter is capable of producing a robust signal that includes redundant, repetitious subcarriers.

25. (Original) The modem of claim 24, wherein the transmitter transmits robust repetitious subcarriers according to a predetermined format.

26-45. (Previously Canceled)

46. (Previously Presented) A modem for communication to at least one node across at least one channel of a coaxial network, the modem comprising:

a transmitter; and

a MAC layer in signal communication with the transmitter,

wherein the MAC layer utilizes at least one probe packet as an IQ imbalance and hardware/RF optimization probe whose purpose is to be able to reduce hardware complexity and compensate for certain hardware imperfections; and

wherein the transmitter communicates the at least one transmit packet.

47. (Previously Presented) A modem for communication to at least one node across at least one channel of a coaxial network, the modem comprising:

a transmitter; and

a MAC layer in signal communication with the transmitter,

wherein the MAC layer utilizes at least one probe packet as an echo profile probe whose purpose is to measure node delay spread on the network in order to optimize the preamble and cyclic prefix requirements or other parameters; and

wherein the transmitter communicates the at least one transmit packet.

REMARKS

Upon entry of the foregoing amendments, claims 1-7, 9-25, 46 and 47 are pending. Claims 1, 46, and 47 are independent. Claim 1 is currently amended. Claims 8, 26-45 were previously canceled. No new matter is introduced by these amendments and their entry is respectfully requested.

In view of the above amendments and following remarks, each of the presently pending claims in this application is believed to be in immediate condition for allowance. Accordingly, the Examiner is respectfully requested to reconsider and withdraw the outstanding rejections of the claims and to pass this application to issue. If it is determined that a telephone conference would expedite the prosecution of this application, the Examiner is invited to telephone the undersigned at the number given below.

Examiner's Interview Summary

Applicants would also like to thank the Examiner for the courtesy of granting Applicant's representatives an Examiner's interview on July 22, 2010, wherein the claims 1, 46, and 47 of the application were discussed in light of the references cited in the office action, including Mao (US Patent No. 7,302,700) and Goh (US Patent No. 7,542,411). The amendments and remarks presented herein reflect the substance of that Examiner's interview.

Rejections under 35 U.S.C. § 102(a)

Claim 1 is rejected under 35 U.S.C. §103(a) for allegedly being unpatentable over Bell (US Patent No. 6,052,380) in view of Mao (US Patent No. 7,302,700). Claims 2-5, 10, 11, 14, 16-25 are rejected under 35 U.S.C. §103(a) for allegedly being unpatentable over Bell in view of Mao, and further in view of Gurantz (US Patent Pub. No. 2002/0166124). Claim 6 is rejected under 35 U.S.C. §103(a) for allegedly being unpatentable over Bell in view of Mao, further in view of Gurantz, and further in view of Sambamurthy (US Patent No. 6,085,248). Claim 7 is rejected under 35 U.S.C. §103(a) for allegedly being unpatentable over Bell in view of Mao, further in view of Gurantz, and further in view of Orava (US Patent Pub. No. 2002/0071477). Claims 9 and 12 are rejected under 35 U.S.C. §103(a) for allegedly being unpatentable over Bell in view of Mao, further in view of Gurantz, further in view of Sambamurthy, and further in view

of Kim (US Patent Pub. No. 2004/0170157). Claim 13 is rejected under 35 U.S.C. §103(a) for allegedly being unpatentable over Bell in view of Mao, further in view of Gurantz, further in view of Sambamurthy, further in view of Kim, and further in view of Fortenberry (US Patent No. 6,005,939). Claim 15 is rejected under 35 U.S.C. §103(a) for allegedly being unpatentable over Bell in view of Mao, further in view of Gurantz, and further in view of Youge (US Patent No. 6,522,650). Claim 46 is rejected under 35 U.S.C. §103(a) for allegedly being unpatentable over Bell in view of Moorti (US Patent Pub. No. 2007/0002878). Claim 47 is rejected under 35 U.S.C. §103(a) for allegedly being unpatentable over Bell in view of Kim, and further in view of Goh (US Patent No. 7,542,411). Applicants respectfully traverse these rejections based on the current claim amendments and the following remarks.

Independent Claim 1

Claim 1 as amended is patentable over Bell and Mao, whether considered alone or in combination, because both Bell and Mao fail to teach or suggest "wherein the MAC layer utilizes at least one probe packet for computing a network frequency response characterizing a first channel of the coaxial network and determining modulation optimization for the first channel based on the network frequency response," as recited in claim 1 as amended.

Bell discloses an improved network adapter and architecture which combines the Ethernet bus access protocol with a digital subscriber line -based (DSL-based) physical layer driver to provide low cost, compatibility advantages associated with Ethernet, improved reliability, improved robustness, improved bandwidth, and noise resistance of the DSL layer. (*See*, Bell, Abstract.) As recognized in the Office Action, Bell fails to teach or suggest a MAC layer that utilizes at least one probe packet for network frequency response purposes. Similarly, Bell fails to disclose utilizing at least one probe packet for computing a network frequency response that characterizes a channel of the coaxial network, or determining modulation optimization for a channel based on a network frequency response, as required by claim 1 as amended. In view of this, claim 1 is patentable over Bell.

Likewise, Mao fails to cure this deficiency of Bell. Mao is directed toward methods and apparatuses for transferring packets in a packet switched communication system and, more specifically, provides a system that includes an L2 device comprising a controller determining

for each packet received whether the received packet is to be inspected, an inspection device operable to inspect and filter packets identified by the controller including using a zone specific policy and an L2 controller for transferring inspected packets in accordance with L2 header information using L2 protocols. (*See*, Mao, Abstract.) With respect to probe packets, Mao discloses creating and broadcasting a probe packet including an unknown MAC address once it is determined that a received packet has an unknown destination MAC address. (*See*, Mao, 3:48-65.) Mao further discloses the broadcast of probe packets is used to discover topology information for unknown MAC destinations. (*See*, *Id.*, 4:60-62.) This is in no way similar to a "MAC layer utilize[]at least one probe packet for computing a network frequency response characterizing a first channel of the coaxial network and determining modulation optimization for the first channel based on the network frequency response," as recited and required in claim 1 as amended. In addition, nowhere within Mao is it ever taught or suggested that a probe packet be utilized as described in claim 1. Hence, for at least these reasons, claim 1 is also patentable over Mao.

In view of above, claim 1 is patentable over both Bell and Mao, whether considered alone or in combination and Applicants, therefore, respectfully request that the Examiner reconsider and withdraw the rejection of claim 1 under 35 U.S.C. §103(a).

Dependent Claims 2-7, and 9-25

Claims 2-7, and 9-25 depend from claim 1 and, as such, are patentable over Bell and Mao, whether considered alone or in combination, for at least the same reasons provided above with respect to claim 1. In addition, neither Gurantz, Sambamurthy, Orava, Kim, Fortenberry, Youge, Moorti, nor Goh cures the deficiencies identified above with respect to Bell and Mao. Accordingly, claims 2-7, and 9-25 are patentable over Bell, Mao, Gurantz, Sambamurthy, Orava, Kim, Fortenberry, Youge Moorti, or Goh. Applicants, therefore, respectfully request that the Examiner reconsider and withdraw the rejection of claims 2-7, and 9-25 under 35 U.S.C. §103(a).

Independent Claim 46

Claim 46 patentable over Bell and Moorti because neither Bell nor Moorti teaches or suggests "wherein the MAC layer utilizes at least one probe packet as an IQ imbalance and hardware/RF optimization probe whose purpose is to be able to reduce hardware complexity and compensate for certain hardware imperfections," as recited by claim 46.

As recognized in the Office Action, Bell fails to teach or suggest a MAC layer that utilizes at least one probe packet as an IQ imbalance and harwarde/RF optimization probe whose purpose is to be able to reduce hardware complexity and compensate for certain hardware imperfections. As such, claim 46 is patentable over Bell for at least this reason. Additionally, claim 46 is patentable over Moorti because fails to cure this deficiency.

Moorti discloses and describes a wireless communication baseband transceiver including a baseband transmit processing module and a baseband receive processing module. According to Moorti, the baseband transmit processing module includes an encoding module, an interleaving module, a plurality of symbol mapping modules, a plurality of domain conversion modules, a plurality of cyclic prefix modules, a plurality of compensation modules, and a control module that is operably coupled to produce preamble set up information and payload set up information based on a mode of a plurality of protocol modes. (*See,* Moorti, Abstract.) In Figure 4 and paragraph [0050], Moorti describes a portion of the baseband transmit processing module 100, wherein the control module 130 of the module 100 includes, among other things, a medium access control (MAC)/physical (PHY) interface 210. In Figure 9 and paragraph [0079], Moorti describes a portion of the baseband receive processing module 100, wherein the control module 320 of the module 100 includes, among other things, a packet protocol control module 370, a plurality of carrier sense modules 372, 374, a combining module 376, a frequency and phase offset determining module 378, a coarse/fine frequency estimation 380, a plurality of IQ imbalance estimation modules 366, 368, and a MAC/PHY interface 386.

However, nowhere does Moorti ever teach or suggest that a "MAC layer utilizes at least one probe packet as an IQ imbalance and hardware/RF optimization probe whose purpose is to be able to reduce hardware complexity and compensate for certain hardware imperfections," as recited and required by claim 46. In addition, with respect to IQ imbalance, Moorti merely states that the IQ imbalance estimation modules monitor the output of the IQ compensation modules

and determine the corresponding IQ imbalance from there. (*See*, *Id.*, paragraph [0081].) Moorti is utterly silent with respect to use of a IQ imbalance and hardware/RF optimization probe.

The baseband receive processing module includes a plurality of receive compensation modules, a plurality of cyclic prefix removal modules, a plurality of receive domain conversion modules, an equalizing module, a plurality of demapping modules, a deinterleaving module, a decoding module, and a receive control module that is operably coupled to determine the mode from the plurality of protocol modes and the compensation control signals based on the at least one compensated stream of symbols.

Accordingly, for at least the foregoing reasons, claim 46 is patentable over Bell and Moorti. Applicants, therefore, respectfully request that the Examiner reconsider and withdraw the rejection of claim 46 under 35 U.S.C. §103(a).

Independent Claim 47

Claim 47 is patentable over Bell, Kim and Goh at least because Goh is not considered prior art with respect to this application. As discussed during the Examiner's Interview of July 22, 2010, Goh claims priority from and the benefit of US Provisional Application Serial No. 60/633,257, filed on December 3, 2004. The current application, on the other hand, claims priority from and the benefit of a number of US provisional applications (Serial Nos. 60/633,091, 60/632,797, 60/633,002, and 60/632,856) which were all filed on December 2, 2004. As such, this application pre-dates Goh rendering Goh non-prior art.

Additionally, at the time claimed invention was made, this application and Goh were owned by the same entity, Entropic Communications Inc.. As such, under 35 U.S.C. §103(c), Goh is unable to preclude patentability of this application under 35 U.S.C. §103(a).

Furthermore, claim 47 is patentable over Bell and Kim because neither Bell or Kim, whether considered alone or in combination, teaches or suggests "wherein the MAC layer utilizes at least one probe packet as an echo profile probe whose purpose is to measure node

delay spread on the network in order to optimize the preamble and cyclic prefix requirements or other parameters," as recited and required by claim 47.

As recognized in the Office Action, Bell fails to teach or suggest a MAC layer that utilizes at least one probe packet as an echo profile probe whose purpose is to measure node delay spread on the network in order to optimize the preamble and cyclic prefix requirements or other parameters. As such, claim 46 is patentable over Bell for at least this reason. Additionally, claim 47 is patentable over Kim because fails to cure this deficiency.

Kim discloses a method for packet re-flooding in a wireless ad hoc network for transmitting a broadcast packet from a source node to a destination node. In paragraph [0008-0011], Kim describes preventing channel collisions using CSMA/CA (Carrier Sense Multiple Access/Collision Avoidance), which is a MAC (media access control) layer protocol. Kim explains how under CSMA/CA, each node transmits a confirmation signal and starts transmitting the packets only after confirming that there would be no collision. Kim also explains that when a collision occurs in the network the nodes delay packet transmission for a random period of time and attempt re-transmission later. Nevertheless, nowhere does Kim ever teach or suggest "wherein the MAC layer utilizes at least one probe packet as an echo profile probe whose purpose is to measure node delay spread on the network in order to optimize the preamble and cyclic prefix requirements or other parameters," as recited in claim 47.

Accordingly, for at least the foregoing reasons, claim 47 is patentable over Bell, Kim, and Goh. Applicants, therefore, respectfully request that the Examiner reconsider and withdraw the rejection of claim 47 under 35 U.S.C. §103(a).

CONCLUSION

In view of the above, each of the presently pending claims in this application is believed to be in immediate condition for allowance. Accordingly, the Examiner is respectfully requested to reconsider and withdraw the outstanding rejection of the claims and to pass this application to issue.

In the event the U.S. Patent and Trademark office determines that an extension and/or other relief is required, Applicants petition for any required relief including extensions of time and authorizes the Commissioner to charge the cost of such petitions and/or other fees due in connection with the filing of this document to Deposit Account No. 50-4562 referencing the Attorney Docket No. noted above. However, the Commissioner is not authorized to charge the cost of the issue fee to the Deposit Account.

Dated: July 27, 2010

Respectfully submitted,

By: _____

Anup Suresh
Registration No.: 65,338

SHEPPARD MULLIN RICHTER &
HAMPTON LLP
12275 El Camino Real
Suite 200
San Diego, CA 92130-2006
Telephone: (858) 720-8900
Facsimile: (858) 509-3691

Electronic Patent Application Fee Transmittal

Application Number:	11241748
Filing Date:	29-Sep-2005
Title of Invention:	Physical layer transmitter for use in a broadband local area network
First Named Inventor/Applicant Name:	Anton Monk
Filer:	Daniel N. Yannuzzi/Linda de la Garza
Attorney Docket Number:	E040004USU2

Filed as Small Entity

Utility under 35 USC 111(a) Filing Fees

Description	Fee Code	Quantity	Amount	Sub-Total in USD($)
Basic Filing:				
Pages:				
Claims:				
Miscellaneous-Filing:				
Petition:				
Patent-Appeals-and-Interference:				
Post-Allowance-and-Post-Issuance:				
Extension-of-Time:				
Extension - 1 month with $0 paid	2251	1	65	65

Description	Fee Code	Quantity	Amount	Sub-Total in USD($)
Miscellaneous:				
			Total in USD ($)	**65**

Electronic Acknowledgement Receipt

EFS ID:	8101511
Application Number:	11241748
International Application Number:	
Confirmation Number:	2829
Title of Invention:	Physical layer transmitter for use in a broadband local area network
First Named Inventor/Applicant Name:	Anton Monk
Customer Number:	77330
Filer:	Daniel N. Yannuzzi/Linda de la Garza
Filer Authorized By:	Daniel N. Yannuzzi
Attorney Docket Number:	E040004USU2
Receipt Date:	27-JUL-2010
Filing Date:	29-SEP-2005
Time Stamp:	17:51:02
Application Type:	Utility under 35 USC 111(a)

Payment information:

Submitted with Payment	yes
Payment Type	Deposit Account
Payment was successfully received in RAM	$65
RAM confirmation Number	4356
Deposit Account	504562
Authorized User	

File Listing:

Document Number	Document Description	File Name	File Size(Bytes)/ Message Digest	Multi Part /.zip	Pages (if appl.)

1		156001-AmendmntExt.pdf	584451 69b111e7b674f1c64f40747485a095a0023fd233	yes	15
	Multipart Description/PDF files in .zip description				
	Document Description		**Start**	**End**	
	Extension of Time		1	2	
	Amendment/Req. Reconsideration-After Non-Final Reject		3	15	
Warnings:					
Information:					
2	Fee Worksheet (PTO-875)	fee-info.pdf	30185 4daf2b4f687885bb539c7ae83ef9236b26a1f281	no	2
Warnings:					
Information:					
		Total Files Size (in bytes):	614636		

This Acknowledgement Receipt evidences receipt on the noted date by the USPTO of the indicated documents, characterized by the applicant, and including page counts, where applicable. It serves as evidence of receipt similar to a Post Card, as described in MPEP 503.

<u>New Applications Under 35 U.S.C. 111</u>
If a new application is being filed and the application includes the necessary components for a filing date (see 37 CFR 1.53(b)-(d) and MPEP 506), a Filing Receipt (37 CFR 1.54) will be issued in due course and the date shown on this Acknowledgement Receipt will establish the filing date of the application.

<u>National Stage of an International Application under 35 U.S.C. 371</u>
If a timely submission to enter the national stage of an international application is compliant with the conditions of 35 U.S.C. 371 and other applicable requirements a Form PCT/DO/EO/903 indicating acceptance of the application as a national stage submission under 35 U.S.C. 371 will be issued in addition to the Filing Receipt, in due course.

<u>New International Application Filed with the USPTO as a Receiving Office</u>
If a new international application is being filed and the international application includes the necessary components for an international filing date (see PCT Article 11 and MPEP 1810), a Notification of the International Application Number and of the International Filing Date (Form PCT/RO/105) will be issued in due course, subject to prescriptions concerning national security, and the date shown on this Acknowledgement Receipt will establish the international filing date of the application.

COMBINED AMENDMENT & PETITION FOR EXTENSION OF TIME UNDER 37 CFR 1.136(a) (Small Entity)	Docket No. 05JM-156001 (E040004USU2)

In Re Application Of: **Anton Monk et al.**

Application No.	Filing Date	Examiner	Customer No.	Group Art Unit	Confirmation No.
11/241,748	September 29, 2005	Chen, Cai Y.	30764	2425	2829

Invention: **PHYSICAL LAYER TRANSMITTER FOR USE IN A BROADBAND LOCAL AREA NETWORK**

COMMISSIONER FOR PATENTS:

This is a combined amendment and petition under the provisions of 37 CFR 1.136(a) to extend the period for filing a response to the Office Action of March 29, 2010 (*Date*) in the above-identified application.

The requested extension is as follows (check time period desired):

☒ One month ☐ Two months ☐ Three months ☐ Four months ☐ Five months

from: June 29, 2010 (*Date*) until: July 29, 2010 (*Date*)

Applicant claims small entity status. See 37 CFR 1.27.

The fee for the amendment and extension of time has been calculated as shown below:

CLAIMS AS AMENDED

	CLAIMS REMAINING AFTER AMENDMENT		HIGHEST # PREV. PAID FOR		NUMBER EXTRA CLAIMS PRESENT	RATE	ADDITIONAL FEE
TOTAL CLAIMS	26	-	45	=	0	x $26.00	$0.00
INDEP. CLAIMS	3	-	3	=	0	x $110.00	$0.00
						FEE FOR AMENDMENT	$0.00
						FEE FOR EXTENSION OF TIME	$65.00
						TOTAL FEE FOR AMENDMENT AND EXTENSION OF TIME	**$65.00**

P28SMALL/REV06

COMBINED AMENDMENT & PETITION FOR EXTENSION OF TIME UNDER 37 CFR 1.136(a) (Small Entity)	Docket No. 05JM-156001 (E040004USU2)

The fee for the amendment and extension of time is to be paid as follows:

☐ A check in the amount of for the amendment and extension of time is enclosed.

☒ Please charge Deposit Account No. **50-4562** in the amount of **$65.00**

☒ The Director is hereby authorized to charge payment of the following fees associated with this communication or credit any overpayment to Deposit Account No. **50-4562**

- ☒ Any additional filing fees required under 37 C.F.R. 1.16.
- ☒ Any patent application processing fees under 37 CFR 1.17.

☒ If an additional extension of time is required, please consider this a petition therefor and charge any additional fees which may be required to Deposit Account No. **50-4562**

☐ Payment by credit card. Form PTO-2038 is attached.

WARNING: Information on this form may become public. Credit card information should not be included on this form. Provide credit card information and authorization on PTO-2038.

Signature

Dated: **July 27, 2010**

Anup A. Suresh
Registration No.: 65,338
SHEPPARD MULLIN RICHTER & HAMPTON LLP
12275 El Camino Real, Suite 200
San Diego, California 92130
Telephone: (858) 720-8900
Facsimile: (858) 509-3691

I hereby certify that this correspondence is being deposited with the United States Postal Service with sufficient postage as first class mail in an envelope addressed to the "Commissioner for Patents, P.O. Box 1450, Alexandria, VA 22313-1450" [37 CFR 1.8(a)] on

(Date)

Signature of Person Mailing Correspondence

Typed or Printed Name of Person Mailing Correspondence

cc:

P28SMALL/REV06

IN THE UNITED STATES PATENT AND TRADEMARK OFFICE

In re Patent Application of: Anton Monk *et al.*	Docket No.: 05JM-156001 (E040004USU2)
Application No.: 11/241,748	Confirmation No.: 2829
Filed: September 29, 2005	Art Unit: 2425
For: PHYSICAL LAYER TRANSMITTER FOR USE IN A BROADBAND LOCAL AREA NETWORK	Examiner: Chen, Cai Y.

AMENDMENT AND REPLY UNDER 37 C.F.R. § 1.111

Mail Stop: Amendment
Commissioner for Patents
P.O. Box 1450
Alexandria, VA 22313-1450

INTRODUCTORY COMMENTS

The following is filed in response to the Office Action, mailed March 29, 2010, deadline for which to respond is extended by 1 month to July 29, 2010, in view of the attached petition for time extension. Claims 1-7, 9-25, 46 and 47 stand rejected in this application. Careful consideration has been given to the grounds for rejection, and the following amendment and discussion are offered in response. Reconsideration is respectfully requested.

Amendments to the Claims begin on page 2 of this paper.

Remarks/Arguments begin on page 7 of this paper.

AMENDMENTS TO THE CLAIMS

Please amend the claims as follows. This listing of claims will replace all prior versions of claims in the application.

1. (Currently Amended) A modem for communication to at least one node across at least one channel of a coaxial network, the modem comprising:

a transmitter; and

a MAC layer in signal communication with the transmitter,

wherein the MAC layer utilizes at least one probe packet for computing a network frequency response characterizing a first channel of the coaxial network and determining modulation optimization for the first channel based on the network frequency response, and

wherein the transmitter communicates the at least one transmit packet.

2. (Original) The modem of claim 1, wherein the transmitter is a baseband transmitter.

3. (Original) The modem of claim 1, wherein the transmitter is a Radio Frequency ("RF") transmitter.

4. (Original) The modem of claim 1, wherein the packet communication utilizes services.

5. (Original) The modem of claim 1, wherein the transmitter communicates with at least one node utilizing packet communications using Time Division Duplex ("TDD").

6. (Original) The modem of claim 5, wherein the packet communication utilizes formatting that includes

a preamble; and

a packet of data.

7. (Previously Presented) The modem of claim 6, wherein the packet communications includes at least one robust packet.

8. (Previously Canceled)

9. (Original) The modem of claim 6, wherein the formatting includes packet encryption.

10. (Original) The modem of claim 6, wherein the scrambling formatting includes Reed Solomon ("RS") encoding.

11. (Original) The modem of claim 10, wherein the packet is padded to include an integral number of similar size and coding type RS codewords.

12. (Original) The modem of claim 6, wherein the formatting utilizes packet encryption.

13. (Previously Presented) The modem of claim 12, wherein the encryption utilizes Date Encryption Standard ("DES").

14. (Original) The modem of claim 1, wherein the transmitter utilizes orthogonal frequency division multiplexing ("OFDM") modulation.

15. (Original) The modem of claim 14, wherein the transmitter utilizes padding to utilize an integral number of OFDM symbols.

16. (Previously Presented) The modem of claim 1, wherein the MAC layer utilizes orthogonal frequency division multiplexing ("OFDM") bit-loading.

17. (Original) The modem of claim 16, wherein the formatting utilizes scrambling.

18. (Original) The modem of claim 17, wherein the scrambling is byte scrambling.

19. (Original) The modem of claim 18, wherein the scrambling is OFDM bin scrambling.

20. (Original) The modem of claim 14 wherein the transmitter utilizes a modulation type on each of its subcarriers chosen from the group consisting of:

bipolar phase shift keying ("BPSK");

quadrature phase shift keying ("QPSK");

8 quadrature amplitude modulation ("QAM");

16 QAM;

32 QAM;

64 QAM;

128 QAM; and

256 QAM.

21. (Original) The modem of claim 20, wherein the modulation type is obtained from a translation table that maps data to waveform data.

22. (Original) The modem of claim 21, wherein an amplitude factor is applied to the various modulation types.

23. (Original) The modem of claim 1, wherein the transmitter is capable of producing and transmitting a probe signal to the at least one node.

24. (Original) The modem of claim 1, wherein the transmitter is capable of producing a robust signal that includes redundant, repetitious subcarriers.

25. (Original) The modem of claim 24, wherein the transmitter transmits robust repetitious subcarriers according to a predetermined format.

26-45. (Previously Canceled)

46. (Previously Presented) A modem for communication to at least one node across at least one channel of a coaxial network, the modem comprising:

a transmitter; and

a MAC layer in signal communication with the transmitter,

wherein the MAC layer utilizes at least one probe packet as an IQ imbalance and hardware/RF optimization probe whose purpose is to be able to reduce hardware complexity and compensate for certain hardware imperfections; and

wherein the transmitter communicates the at least one transmit packet.

47. (Previously Presented) A modem for communication to at least one node across at least one channel of a coaxial network, the modem comprising:

a transmitter; and

a MAC layer in signal communication with the transmitter,

wherein the MAC layer utilizes at least one probe packet as an echo profile probe whose purpose is to measure node delay spread on the network in order to optimize the preamble and cyclic prefix requirements or other parameters; and

wherein the transmitter communicates the at least one transmit packet.

REMARKS

Upon entry of the foregoing amendments, claims 1-7, 9-25, 46 and 47 are pending. Claims 1, 46, and 47 are independent. Claim 1 is currently amended. Claims 8, 26-45 were previously canceled. No new matter is introduced by these amendments and their entry is respectfully requested.

In view of the above amendments and following remarks, each of the presently pending claims in this application is believed to be in immediate condition for allowance. Accordingly, the Examiner is respectfully requested to reconsider and withdraw the outstanding rejections of the claims and to pass this application to issue. If it is determined that a telephone conference would expedite the prosecution of this application, the Examiner is invited to telephone the undersigned at the number given below.

Examiner's Interview Summary

Applicants would also like to thank the Examiner for the courtesy of granting Applicant's representatives an Examiner's interview on July 22, 2010, wherein the claims 1, 46, and 47 of the application were discussed in light of the references cited in the office action, including Mao (US Patent No. 7,302,700) and Goh (US Patent No. 7,542,411). The amendments and remarks presented herein reflect the substance of that Examiner's interview.

Rejections under 35 U.S.C. § 102(a)

Claim 1 is rejected under 35 U.S.C. §103(a) for allegedly being unpatentable over Bell (US Patent No. 6,052,380) in view of Mao (US Patent No. 7,302,700). Claims 2-5, 10, 11, 14, 16-25 are rejected under 35 U.S.C. §103(a) for allegedly being unpatentable over Bell in view of Mao, and further in view of Gurantz (US Patent Pub. No. 2002/0166124). Claim 6 is rejected under 35 U.S.C. §103(a) for allegedly being unpatentable over Bell in view of Mao, further in view of Gurantz, and further in view of Sambamurthy (US Patent No. 6,085,248). Claim 7 is rejected under 35 U.S.C. §103(a) for allegedly being unpatentable over Bell in view of Mao, further in view of Gurantz, and further in view of Orava (US Patent Pub. No. 2002/0071477). Claims 9 and 12 are rejected under 35 U.S.C. §103(a) for allegedly being unpatentable over Bell in view of Mao, further in view of Gurantz, further in view of Sambamurthy, and further in view

of Kim (US Patent Pub. No. 2004/0170157). Claim 13 is rejected under 35 U.S.C. §103(a) for allegedly being unpatentable over Bell in view of Mao, further in view of Gurantz, further in view of Sambamurthy, further in view of Kim, and further in view of Fortenberry (US Patent No. 6,005,939). Claim 15 is rejected under 35 U.S.C. §103(a) for allegedly being unpatentable over Bell in view of Mao, further in view of Gurantz, and further in view of Youge (US Patent No. 6,522,650). Claim 46 is rejected under 35 U.S.C. §103(a) for allegedly being unpatentable over Bell in view of Moorti (US Patent Pub. No. 2007/0002878). Claim 47 is rejected under 35 U.S.C. §103(a) for allegedly being unpatentable over Bell in view of Kim, and further in view of Goh (US Patent No. 7,542,411). Applicants respectfully traverse these rejections based on the current claim amendments and the following remarks.

Independent Claim 1

Claim 1 as amended is patentable over Bell and Mao, whether considered alone or in combination, because both Bell and Mao fail to teach or suggest "wherein the MAC layer utilizes at least one probe packet for computing a network frequency response characterizing a first channel of the coaxial network and determining modulation optimization for the first channel based on the network frequency response," as recited in claim 1 as amended.

Bell discloses an improved network adapter and architecture which combines the Ethernet bus access protocol with a digital subscriber line -based (DSL-based) physical layer driver to provide low cost, compatibility advantages associated with Ethernet, improved reliability, improved robustness, improved bandwidth, and noise resistance of the DSL layer. (*See*, Bell, Abstract.) As recognized in the Office Action, Bell fails to teach or suggest a MAC layer that utilizes at least one probe packet for network frequency response purposes. Similarly, Bell fails to disclose utilizing at least one probe packet for computing a network frequency response that characterizes a channel of the coaxial network, or determining modulation optimization for a channel based on a network frequency response, as required by claim 1 as amended. In view of this, claim 1 is patentable over Bell.

Likewise, Mao fails to cure this deficiency of Bell. Mao is directed toward methods and apparatuses for transferring packets in a packet switched communication system and, more specifically, provides a system that includes an L2 device comprising a controller determining

for each packet received whether the received packet is to be inspected, an inspection device operable to inspect and filter packets identified by the controller including using a zone specific policy and an L2 controller for transferring inspected packets in accordance with L2 header information using L2 protocols. (*See*, Mao, Abstract.) With respect to probe packets, Mao discloses creating and broadcasting a probe packet including an unknown MAC address once it is determined that a received packet has an unknown destination MAC address. (*See*, Mao, 3:48-65.) Mao further discloses the broadcast of probe packets is used to discover topology information for unknown MAC destinations. (*See*, *Id.*, 4:60-62.) This is in no way similar to a "MAC layer utilize[]at least one probe packet for computing a network frequency response characterizing a first channel of the coaxial network and determining modulation optimization for the first channel based on the network frequency response," as recited and required in claim 1 as amended. In addition, nowhere within Mao is it ever taught or suggested that a probe packet be utilized as described in claim 1. Hence, for at least these reasons, claim 1 is also patentable over Mao.

In view of above, claim 1 is patentable over both Bell and Mao, whether considered alone or in combination and Applicants, therefore, respectfully request that the Examiner reconsider and withdraw the rejection of claim 1 under 35 U.S.C. §103(a).

Dependent Claims 2-7, and 9-25

Claims 2-7, and 9-25 depend from claim 1 and, as such, are patentable over Bell and Mao, whether considered alone or in combination, for at least the same reasons provided above with respect to claim 1. In addition, neither Gurantz, Sambamurthy, Orava, Kim, Fortenberry, Youge, Moorti, nor Goh cures the deficiencies identified above with respect to Bell and Mao. Accordingly, claims 2-7, and 9-25 are patentable over Bell, Mao, Gurantz, Sambamurthy, Orava, Kim, Fortenberry, Youge Moorti, or Goh. Applicants, therefore, respectfully request that the Examiner reconsider and withdraw the rejection of claims 2-7, and 9-25 under 35 U.S.C. §103(a).

Independent Claim 46

Claim 46 patentable over Bell and Moorti because neither Bell nor Moorti teaches or suggests "wherein the MAC layer utilizes at least one probe packet as an IQ imbalance and hardware/RF optimization probe whose purpose is to be able to reduce hardware complexity and compensate for certain hardware imperfections," as recited by claim 46.

As recognized in the Office Action, Bell fails to teach or suggest a MAC layer that utilizes at least one probe packet as an IQ imbalance and harwarde/RF optimization probe whose purpose is to be able to reduce hardware complexity and compensate for certain hardware imperfections. As such, claim 46 is patentable over Bell for at least this reason. Additionally, claim 46 is patentable over Moorti because fails to cure this deficiency.

Moorti discloses and describes a wireless communication baseband transceiver including a baseband transmit processing module and a baseband receive processing module. According to Moorti, the baseband transmit processing module includes an encoding module, an interleaving module, a plurality of symbol mapping modules, a plurality of domain conversion modules, a plurality of cyclic prefix modules, a plurality of compensation modules, and a control module that is operably coupled to produce preamble set up information and payload set up information based on a mode of a plurality of protocol modes. (*See,* Moorti, Abstract.) In Figure 4 and paragraph [0050], Moorti describes a portion of the baseband transmit processing module 100, wherein the control module 130 of the module 100 includes, among other things, a medium access control (MAC)/physical (PHY) interface 210. In Figure 9 and paragraph [0079], Moorti describes a portion of the baseband receive processing module 100, wherein the control module 320 of the module 100 includes, among other things, a packet protocol control module 370, a plurality of carrier sense modules 372, 374, a combining module 376, a frequency and phase offset determining module 378, a coarse/fine frequency estimation 380, a plurality of IQ imbalance estimation modules 366, 368, and a MAC/PHY interface 386.

However, nowhere does Moorti ever teach or suggest that a "MAC layer utilizes at least one probe packet as an IQ imbalance and hardware/RF optimization probe whose purpose is to be able to reduce hardware complexity and compensate for certain hardware imperfections," as recited and required by claim 46. In addition, with respect to IQ imbalance, Moorti merely states that the IQ imbalance estimation modules monitor the output of the IQ compensation modules

and determine the corresponding IQ imbalance from there. (*See*, *Id.*, paragraph [0081].) Moorti is utterly silent with respect to use of a IQ imbalance and hardware/RF optimization probe.

The baseband receive processing module includes a plurality of receive compensation modules, a plurality of cyclic prefix removal modules, a plurality of receive domain conversion modules, an equalizing module, a plurality of demapping modules, a deinterleaving module, a decoding module, and a receive control module that is operably coupled to determine the mode from the plurality of protocol modes and the compensation control signals based on the at least one compensated stream of symbols.

Accordingly, for at least the foregoing reasons, claim 46 is patentable over Bell and Moorti. Applicants, therefore, respectfully request that the Examiner reconsider and withdraw the rejection of claim 46 under 35 U.S.C. §103(a).

Independent Claim 47

Claim 47 is patentable over Bell, Kim and Goh at least because Goh is not considered prior art with respect to this application. As discussed during the Examiner's Interview of July 22, 2010, Goh claims priority from and the benefit of US Provisional Application Serial No. 60/633,257, filed on December 3, 2004. The current application, on the other hand, claims priority from and the benefit of a number of US provisional applications (Serial Nos. 60/633,091, 60/632,797, 60/633,002, and 60/632,856) which were all filed on December 2, 2004. As such, this application pre-dates Goh rendering Goh non-prior art.

Additionally, at the time claimed invention was made, this application and Goh were owned by the same entity, Entropic Communications Inc.. As such, under 35 U.S.C. §103(c), Goh is unable to preclude patentability of this application under 35 U.S.C. §103(a).

Furthermore, claim 47 is patentable over Bell and Kim because neither Bell or Kim, whether considered alone or in combination, teaches or suggests "wherein the MAC layer utilizes at least one probe packet as an echo profile probe whose purpose is to measure node

delay spread on the network in order to optimize the preamble and cyclic prefix requirements or other parameters," as recited and required by claim 47.

As recognized in the Office Action, Bell fails to teach or suggest a MAC layer that utilizes at least one probe packet as an echo profile probe whose purpose is to measure node delay spread on the network in order to optimize the preamble and cyclic prefix requirements or other parameters. As such, claim 46 is patentable over Bell for at least this reason. Additionally, claim 47 is patentable over Kim because fails to cure this deficiency.

Kim discloses a method for packet re-flooding in a wireless ad hoc network for transmitting a broadcast packet from a source node to a destination node. In paragraph [0008-0011], Kim describes preventing channel collisions using CSMA/CA (Carrier Sense Multiple Access/Collision Avoidance), which is a MAC (media access control) layer protocol. Kim explains how under CSMA/CA, each node transmits a confirmation signal and starts transmitting the packets only after confirming that there would be no collision. Kim also explains that when a collision occurs in the network the nodes delay packet transmission for a random period of time and attempt re-transmission later. Nevertheless, nowhere does Kim ever teach or suggest "wherein the MAC layer utilizes at least one probe packet as an echo profile probe whose purpose is to measure node delay spread on the network in order to optimize the preamble and cyclic prefix requirements or other parameters," as recited in claim 47.

Accordingly, for at least the foregoing reasons, claim 47 is patentable over Bell, Kim, and Goh. Applicants, therefore, respectfully request that the Examiner reconsider and withdraw the rejection of claim 47 under 35 U.S.C. §103(a).

CONCLUSION

In view of the above, each of the presently pending claims in this application is believed to be in immediate condition for allowance. Accordingly, the Examiner is respectfully requested to reconsider and withdraw the outstanding rejection of the claims and to pass this application to issue.

In the event the U.S. Patent and Trademark office determines that an extension and/or other relief is required, Applicants petition for any required relief including extensions of time and authorizes the Commissioner to charge the cost of such petitions and/or other fees due in connection with the filing of this document to Deposit Account No. 50-4562 referencing the Attorney Docket No. noted above. However, the Commissioner is not authorized to charge the cost of the issue fee to the Deposit Account.

Dated: July 27, 2010

Respectfully submitted,

By: _____

Anup Suresh
Registration No.: 65,338

SHEPPARD MULLIN RICHTER &
HAMPTON LLP
12275 El Camino Real
Suite 200
San Diego, CA 92130-2006
Telephone: (858) 720-8900
Facsimile: (858) 509-3691

PTO/SB/06 (07-06)
Approved for use through 1/31/2007. OMB 0651-0032
U.S. Patent and Trademark Office; U.S. DEPARTMENT OF COMMERCE
Under the Paperwork Reduction Act of 1995, no persons are required to respond to a collection of information unless it displays a valid OMB control number.

PATENT APPLICATION FEE DETERMINATION RECORD

Substitute for Form PTO-875

Application or Docket Number	Filing Date	
11/241,748	09/29/2005	☐ To be Mailed

APPLICATION AS FILED – PART I

FOR	(Column 1) NUMBER FILED	(Column 2) NUMBER EXTRA	SMALL ENTITY ☐ RATE ($)	SMALL ENTITY FEE ($)	OR	OTHER THAN SMALL ENTITY RATE ($)	OTHER THAN SMALL ENTITY FEE ($)
☐ BASIC FEE (37 CFR 1.16(a), (b), or (c))	N/A	N/A	N/A			N/A	
☐ SEARCH FEE (37 CFR 1.16(k), (i), or (m))	N/A	N/A	N/A			N/A	
☐ EXAMINATION FEE (37 CFR 1.16(o), (p), or (q))	N/A	N/A	N/A			N/A	
TOTAL CLAIMS (37 CFR 1.16(i))	minus 20 =	*	X $ =		OR	X $ =	
INDEPENDENT CLAIMS (37 CFR 1.16(h))	minus 3 =	*	X $ =			X $ =	
☐ APPLICATION SIZE FEE (37 CFR 1.16(s))	If the specification and drawings exceed 100 sheets of paper, the application size fee due is $250 ($125 for small entity) for each additional 50 sheets or fraction thereof. See 35 U.S.C. 41(a)(1)(G) and 37 CFR 1.16(s).						
☐ MULTIPLE DEPENDENT CLAIM PRESENT (37 CFR 1.16(j))							
* If the difference in column 1 is less than zero, enter "0" in column 2.			TOTAL			TOTAL	

APPLICATION AS AMENDED – PART II

AMENDMENT 07/27/2010

	(Column 1) CLAIMS REMAINING AFTER AMENDMENT		(Column 2) HIGHEST NUMBER PREVIOUSLY PAID FOR	(Column 3) PRESENT EXTRA	SMALL ENTITY RATE ($)	SMALL ENTITY ADDITIONAL FEE ($)	OR	OTHER THAN SMALL ENTITY RATE ($)	OTHER THAN SMALL ENTITY ADDITIONAL FEE ($)
Total (37 CFR 1.16(i))	* 26	Minus	** 45	= 0	X $ =		OR	X $52=	0
Independent (37 CFR 1.16(h))	* 3	Minus	***3	= 0	X $ =		OR	X $220=	0
☐ Application Size Fee (37 CFR 1.16(s))									
☐ FIRST PRESENTATION OF MULTIPLE DEPENDENT CLAIM (37 CFR 1.16(j))							OR		
					TOTAL ADD'L FEE		OR	TOTAL ADD'L FEE	0

AMENDMENT

	(Column 1) CLAIMS REMAINING AFTER AMENDMENT		(Column 2) HIGHEST NUMBER PREVIOUSLY PAID FOR	(Column 3) PRESENT EXTRA	SMALL ENTITY RATE ($)	SMALL ENTITY ADDITIONAL FEE ($)	OR	OTHER THAN SMALL ENTITY RATE ($)	OTHER THAN SMALL ENTITY ADDITIONAL FEE ($)
Total (37 CFR 1.16(i))	*	Minus	**	=	X $ =		OR	X $ =	
Independent (37 CFR 1.16(h))	*	Minus	***	=	X $ =		OR	X $ =	
☐ Application Size Fee (37 CFR 1.16(s))									
☐ FIRST PRESENTATION OF MULTIPLE DEPENDENT CLAIM (37 CFR 1.16(j))							OR		
					TOTAL ADD'L FEE		OR	TOTAL ADD'L FEE	

* If the entry in column 1 is less than the entry in column 2, write "0" in column 3.
** If the "Highest Number Previously Paid For" IN THIS SPACE is less than 20, enter "20".
*** If the "Highest Number Previously Paid For" IN THIS SPACE is less than 3, enter "3".
The "Highest Number Previously Paid For" (Total or Independent) is the highest number found in the appropriate box in column 1.

Legal Instrument Examiner:
/CAROL BARNES/

This collection of information is required by 37 CFR 1.16. The information is required to obtain or retain a benefit by the public which is to file (and by the USPTO to process) an application. Confidentiality is governed by 35 U.S.C. 122 and 37 CFR 1.14. This collection is estimated to take 12 minutes to complete, including gathering, preparing, and submitting the completed application form to the USPTO. Time will vary depending upon the individual case. Any comments on the amount of time you require to complete this form and/or suggestions for reducing this burden, should be sent to the Chief Information Officer, U.S. Patent and Trademark Office, U.S. Department of Commerce, P.O. Box 1450, Alexandria, VA 22313-1450. DO NOT SEND FEES OR COMPLETED FORMS TO THIS ADDRESS. **SEND TO: Commissioner for Patents, P.O. Box 1450, Alexandria, VA 22313-1450.**
If you need assistance in completing the form, call 1-800-PTO-9199 and select option 2.

UNITED STATES PATENT AND TRADEMARK OFFICE

UNITED STATES DEPARTMENT OF COMMERCE
United States Patent and Trademark Office
Address: COMMISSIONER FOR PATENTS
P.O. Box 1450
Alexandria, Virginia 22313-1450
www.uspto.gov

APPLICATION NO.	FILING DATE	FIRST NAMED INVENTOR	ATTORNEY DOCKET NO.	CONFIRMATION NO.
11/241,748	09/29/2005	Anton Monk	E040004USU2	2829

77330 7590 10/01/2010
ENTROPIC COMMUNICATIONS, INC.
6290 SEQUENCE DRIVE
SAN DIEGO, CA 92121

EXAMINER
CHEN, CAI Y

ART UNIT	PAPER NUMBER
2425	

MAIL DATE	DELIVERY MODE
10/01/2010	PAPER

Please find below and/or attached an Office communication concerning this application or proceeding.

The time period for reply, if any, is set in the attached communication.

PTOL-90A (Rev. 04/07)

Office Action Summary	Application No.	Applicant(s)	
	11/241,748	MONK ET AL.	
	Examiner	Art Unit	
	CAI CHEN	2425	

-- The MAILING DATE of this communication appears on the cover sheet with the correspondence address --

Period for Reply

A SHORTENED STATUTORY PERIOD FOR REPLY IS SET TO EXPIRE 3 MONTH(S) OR THIRTY (30) DAYS, WHICHEVER IS LONGER, FROM THE MAILING DATE OF THIS COMMUNICATION.

- Extensions of time may be available under the provisions of 37 CFR 1.136(a). In no event, however, may a reply be timely filed after SIX (6) MONTHS from the mailing date of this communication.
- If NO period for reply is specified above, the maximum statutory period will apply and will expire SIX (6) MONTHS from the mailing date of this communication.
- Failure to reply within the set or extended period for reply will, by statute, cause the application to become ABANDONED (35 U.S.C. § 133). Any reply received by the Office later than three months after the mailing date of this communication, even if timely filed, may reduce any earned patent term adjustment. See 37 CFR 1.704(b).

Status

1)☒ Responsive to communication(s) filed on 27 July 2010.

2a)☒ This action is **FINAL**. 2b)☐ This action is non-final.

3)☐ Since this application is in condition for allowance except for formal matters, prosecution as to the merits is closed in accordance with the practice under *Ex parte Quayle*, 1935 C.D. 11, 453 O.G. 213.

Disposition of Claims

4)☒ Claim(s) 1-25,46 and 47 is/are pending in the application.

4a) Of the above claim(s) _____ is/are withdrawn from consideration.

5)☐ Claim(s) _____ is/are allowed.

6)☒ Claim(s) 1-25 and 46-47 is/are rejected.

7)☐ Claim(s) _____ is/are objected to.

8)☐ Claim(s) _____ are subject to restriction and/or election requirement.

Application Papers

9)☐ The specification is objected to by the Examiner.

10)☐ The drawing(s) filed on _____ is/are: a)☐ accepted or b)☐ objected to by the Examiner.

Applicant may not request that any objection to the drawing(s) be held in abeyance. See 37 CFR 1.85(a).

Replacement drawing sheet(s) including the correction is required if the drawing(s) is objected to. See 37 CFR 1.121(d).

11)☐ The oath or declaration is objected to by the Examiner. Note the attached Office Action or form PTO-152.

Priority under 35 U.S.C. § 119

12)☐ Acknowledgment is made of a claim for foreign priority under 35 U.S.C. § 119(a)-(d) or (f).

a)☐ All b)☐ Some * c)☐ None of:

1.☐ Certified copies of the priority documents have been received.

2.☐ Certified copies of the priority documents have been received in Application No. _____.

3.☐ Copies of the certified copies of the priority documents have been received in this National Stage application from the International Bureau (PCT Rule 17.2(a)).

* See the attached detailed Office action for a list of the certified copies not received.

Attachment(s)

1) ☒ Notice of References Cited (PTO-892)
2) ☐ Notice of Draftsperson's Patent Drawing Review (PTO-948)
3) ☐ Information Disclosure Statement(s) (PTO/SB/08) Paper No(s)/Mail Date _____.
4) ☐ Interview Summary (PTO-413) Paper No(s)/Mail Date. _____ .
5) ☐ Notice of Informal Patent Application
6) ☐ Other: _____.

DETAILED ACTION

Response to Arguments

Applicant's arguments with respect to claims 1-25 and 46-47 have been considered but are moot in view of the new ground(s) of rejection.

Regarding claim 46, on the Remark dated on 07/27/2010, applicant argues that Moorti does not teaches with respect to claim limitation "wherein the MAC layer utilizes at least one probe packet as an IQ imbalance and hardware/RF optimization probe whose purpose is to be able to reduce hardware complexity and compensate for certain hardware imperfections,"

In response, the examiner respectfully disagrees. First of all, the instant claim recites the intended use clause in “whose purpose is to be able to reduce hardware complexity and compensate for certain hardware imperfections” in which does not carry any patentable weight according to MPEP 2111.04. Therefore as long as a reference teaches the limitation of “wherein the MAC layer utilizes at least one probe packet as an IQ imbalance and hardware/RF optimization probe” then the entire limitation is met. In instant claim, the Moorti reference teaches that the MAC layer utilizes an IQ imbalance estimation module to probe for IQ imbalance within the network path (Fig. 9, el 366, el. 368, para. 74, para. 81), and the MAC layer utilizes the entire control module (Fig. 9, el. 20) to probe and optimize the hardware by using the compensation module (el. 302) (para. 74-83).

Regarding claim 47, applicant argues that Goh does not teaches with respect to claim limitation "wherein the MAC layer utilizes at least one probe packet as an echo profile probe whose purpose is to measure node delay spread on the network in order to optimize the preamble and cyclic prefix requirements or other parameters,"

In response, the examiner respectfully disagrees. First of all, the instant claim recites the intended use clause in “whose purpose is to measure node delay spread on the network in order to optimize the preamble and cyclic prefix requirements or other parameters” in which does not carry any patentable weight according to MPEP 2111.04. Therefore as long as a reference teaches the limitation of “wherein the MAC layer utilizes at least one probe packet as an echo profile probe” then the entire limitation is met. Goh teaches a network system to characterize a network communication channel utilizing a echo profile probe (Fig. 3, abstract, lines 30-50).

Claim Rejections - 35 USC § 103

1. The following is a quotation of 35 U.S.C. 103(a) which forms the basis for all obviousness rejections set forth in this Office action:

> (a) A patent may not be obtained though the invention is not identically disclosed or described as set forth in section 102 of this title, if the differences between the subject matter sought to be patented and the prior art are such that the subject matter as a whole would have been obvious at the time the invention was made to a person having ordinary skill in the art to which said subject matter pertains. Patentability shall not be negatived by the manner in which the invention was made.

2. Claim 1 is rejected under 35 U.S.C. 103(a) as being unpatentable over Bell (6,052,380) in view of Robinson (US 2002/0186797 A1).

Regarding claim 1, Bell discloses a modem for communication to at least one node across a at least one channel coaxial network (Fig. 1 and 2, el. 200), the modem comprising:

a transmitter (Fig. 2, col. 7, lines 55-60);

a MAC layer in signal communication with the transmitter (col. 7, lines 61-col. 8, lines 67, Ethernet physical layer signal communication in the network),

wherein the MAC layer utilizes at least one probe packet for modulation optimization (col. 8, lines, DMT modulation)

Wherein the transmitter communicates the at least one transmit packets (Fig. 2, col. 7, lines 55-60).

Bell does not explicitly wherein the MAC layer utilizes at least one probe packet for computing a network frequency response characterizing a first channel of the coaxial network and determining modulation optimization for the first channel based on the network frequency response,

Mao teaches wherein the MAC layer utilizes at least one probe packet for network frequency response (col. 3, lines 48-65, utilizing the probe packet sent to all network interfaces and receives the response)

It would be obvious to one of ordinary in the art at the time of invention to modify Bell to include wherein the MAC layer utilizes at least one probe packet for network frequency response, as taught by Mao, in order to send the data packet to one of the network interface with unknown MAC address.

Bell does not explicitly wherein the MAC layer utilizes at least one probe packet for computing a network frequency response characterizing a first channel of the coaxial network and determining modulation optimization for the first channel based on the network frequency response,

Robinson teaches wherein the MAC layer utilizes at least one probe packet for computing a network frequency response characterizing a first channel of the coaxial network and determining modulation optimization for the first channel based on the network frequency response (para. 62-64, channel frequency response is estimated and quadrature modulation is applied)

It would be obvious to one of ordinary in the art at the time of invention to modify Bell to include wherein the MAC layer utilizes at least one probe packet for computing a network frequency response characterizing a first channel of the coaxial network and determining modulation optimization for the first channel based on the network frequency response in order to determine the best way to deliver the data over the network.

3. Claims 2-5, 10, 11, 14, 16-25 are rejected under 35 U.S.C. 103(a) as being unpatentable over Bell (6,052,380) in view of Mao (7,302,700) and further in view of Robinson and further in view of Gurantz.

Regarding claim 2, Bell in view of Mao and further in view of Robinson discloses all limitation of claim 1,

Bell in view of Mao and further in view of Robinson does not explicitly discloses wherein the transmitter is a baseband transmitter,

Gurantz discloses wherein the transmitter is a baseband transmitter (Gurantz, para. 42, transmitting the baseband signal).

It would be obvious to one of ordinary in the art at the time of invention to modify Bell in view of Mao and further in view of Robinson to include wherein the transmitter is a baseband transmitter, as taught by Gurantz, in order to perform communication in baseband signal so the desirable signal can be decoded (para. 42).

Regarding claim 3, Bell in view of Mao and further in view of Robinson and further in view of Gurantz discloses wherein the transmitter is a Radio Frequency ("RF") transmitter (Gurantz, para. 42 and 49).

Regarding claim 4, Bell in view of Mao and further in view of Robinson and further in view of Gurantz wherein the packet communication utilizes services (MAO, col. 3, lines 48-65,).

Regarding claim 5, Bell in view of Mao and further in view of Robinson and further in view of Gurantz further discloses wherein the transmitter communicates with at least one node using Time Division Duplex ("TDD") (Gurantz, para. 38-39)

Regarding claim 10, Bell in view of Mao and further in view of Robinson discloses all limitation of claim 1,

Bell in view of Mao and further in view of Robinson does not explicitly discloses wherein the scrambling formatting includes Reed Solomon ("RS") encoding,

Gurantz discloses wherein the scrambling formatting includes Reed Solomon ("RS") encoding (Gurantz, para. 53).

It would be obvious to one of ordinary in the art at the time of invention to modify Bell in view of Mao and further in view of Robinson to include wherein the scrambling formatting includes Reed Solomon ("RS") encoding, as taught by Gurantz, in order to format the data in accordance IEEE standard.

Regarding claim 11, Bell in view of Mao and further in view of Robinson and further in view of Gurantz further discloses disclose wherein the packet is padded to include an integral number of similar size and coding type RS codewords (Gurantz, para. 53).

Regarding claim 14, Bell in view of Mao and further in view of Robinson and further in view of Gurantz discloses wherein the transmitter utilizes orthogonal frequency division multiplexing ("OFDM") modulation (Gurantz para. 46-49, para. 52-55).

Regarding claim 16, Bell in view of Mao and further in view of Robinson and further in view of Gurantz discloses wherein the MAC layer utilizes orthogonal frequency division multiplexing ("OFDM") bit-loading (Gurantz para. 46-49, para. 52-55).

Regarding claim 17, Bell in view of Mao and further in view of Robinson and further in view of Gurantz discloses wherein the formatting utilizes scrambling (Gurantz para. 46-49, para. 52-55, OFDM frequency bins scrambling).

Regarding claim 18 Bell in view of Mao and further in view of Robinson and further in view of Gurantz discloses wherein the scrambling is byte scrambling (Gurantz para. 46-49, para. 52-55, OFDM frequency bins scrambling).

Regarding claim 19, Bell in view of Mao and further in view of Robinson and further in view of Gurantz discloses wherein the scrambling is OFDM bin scrambling (Gurantz para. 46-49, para. 52-55, OFDM frequency bins scrambling).

Regarding claim 20, Bell in view of Mao and further in view of Robinson and further in view of Gurantz discloses wherein the transmitter utilizes a modulation type

on each of its subcarriers chosen from the group consisting of: bipolar phase shift keying ("BPSK"); quadrature phase shift keying ("QPSK"); 8 quadrature amplitude modulation ("QAM"); 16 QAM; 32 QAM; 64 QAM; 128 QAM; and 256 QAM (Gurantz para. 49-50).

Regarding claim 21, Bell in view of Mao and further in view of Robinson and further in view of Gurantz discloses wherein the modulation type is obtained from a translation table that maps data to waveform data (Gurantz para. 47-49, IDFT generates the OFDM waveforms data).

Regarding claim 22, Bell in view of Mao and further in view of Robinson and further in view of Gurantz discloses wherein an amplitude factor is applied to the various modulation types (Gurantz para. 47-49).

Regarding claim 23, Bell in view of Mao and further in view of Robinson and further in view of Gurantz discloses wherein the transmitter is capable of producing and transmitting a probe signal to the at least one node (Gurantz para. 20, the modem has a transmitter capable of sending a probe signal during the communication with other within LAN).

Regarding claim 24, Bell in view of Mao and further in view of Robinson and further in view of Gurantz discloses wherein the transmitter wherein the transmitter is capable of producing a robust signal that includes redundant,

repetitious subcarriers (Gurantz para. 20, para. 49-53, the modem has a transmitter capable of producing a probe signal during the communication with other within LAN by using the method of OFDM, and in the process the OFDM will create multiple subcarrier representing by 1 or 0, therefore subcarrier 1 or 0 will repeat during OFDM process).

Regarding claim 25, Bell in view of Mao and further in view of Robinson and further in view of Gurantz discloses wherein the transmitter transmits robust repetitious subcarriers according to a predetermined format (Gurantz para. 20, para. 49-53, the modem has a transmitter capable of producing a probe signal during the communication with other within LAN by using the method of OFDM format, and in the process the OFDM will create multiple subcarrier representing by 1 or 0, therefore subcarrier 1 or 0 will repeat during OFDM process, finally, the transmitter transmits the OFDM signal to LAN).

4. Claim 6 is rejected under 35 U.S.C. 103(a) as being unpatentable over Bell (6,052,380) in view of Mao (7,302,700) and further in view of Robinson and further in view of Gurantz and further in view of Sambamurthy.

Regarding claim 6, Bell in view of Mao and further in view of Robinson and further in view of Gurantz discloses all limitation of claim 5,

Bell in view of Mao and further in view of Robinson and further in view of Gurantz does not discloses wherein the packet communication utilizes formatting that includes a preamble; and a packet of data

Sambamurthy teaches wherein the packet communication utilizes formatting that includes a preamble; and a packet of data (Sambamurthy, Fig. 1B, 5A, col. col. 5, lines 60-col. 6, line 12, col. 22, lines 5-53)

It would be obvious to one of ordinary in the art at the time of invention to modify Bell in view of Mao and further in view of Robinson and further in view of Gurantz to include teaches wherein the packet communication utilizes formatting that includes a preamble; and a packet of data, as taught by Sambamurthy, in order to pass the control information to correction destination in parallel with data processing (col. 25-35).

5. Claim 7 is rejected under 35 U.S.C. 103(a) as being unpatentable over Bell (6,052,380) in view of Mao (7,302,700) and further in view of Robinson and further in view of Gurantz and further in view of Orava (US 2002/0071477 A1).

Regarding claim 7, Bell in view of Mao and further in view of Robinson and further in view of Gurantz and discloses all limitation of claim 5.

Bell in view of Mao and further in view of Robinson and further in view of Gurantz does not explicitly disclose wherein the packet communication includes at least one robust packet.

Orava teaches wherein the packet communication includes at least one robust packet (Fig. 5A, para. 37, ID packets are the robust packet).

It would be obvious to one of ordinary in the art at the time of invention to modify Bell in view of Mao and further in view of Robinson and further in view of Gurantz to include wherein the packet communication includes at least one robust packet, as taught by Orava, in order to effectively transmitting data packet with reduced error by using robust packet (para. 37).

6. Claims 9 and 12 are rejected under 35 U.S.C. 103(a) as being unpatentable over Bell in view of Mao and further in view of Robinson and further in view of Gurantz and further in view of Sambamurthy and further in view of Kim (US 2004/0170157 A1).

Rearding claim 9, Bell in view of Mao and further in view of Robinson and further in view of Gurantz and further in view of Sambamurthy discloses all limitation of claim 6. Bell in view of Mao and further in view of Gurantz and further in view of Sambamurthy further discloses providing conditionally access to the data packets (para. 42).

Bell in view of Mao and further in view of Robinson and further in view of Gurantz and further in view of Sambamurthy does not explicitly disclose wherein the formatting includes packet encryption.

Kim teaches wherein the formatting includes packet encryption (para. 8, para. 12).

It would be obvious to one of ordinary in the art at the time of invention to modify Bell in view of Mao and further in view of Robinson and further in view of Gurantz and further in view of Sambamurthy to include wherein the formatting includes packet encryption, as taught by Kim, in order to protect the data packet from unauthorized usage.

Regarding claim 12, Bell in view of Mao and further in view of Robinson and further in view of Gurantz and further in view of Sambamurthy and further in view of Kim teaches wherein the formatting utilizes packet encryption (Kim, para. 8, para. 12).

7. Claim 13 is rejected under 35 U.S.C. 103(a) as being unpatentable over Bell in view of Mao and further in view of Robinson and further in view of Gurantz and further in view of Sambamurthy and further in view of Kim and further in view of Kim (US 2004/0170157 A1) and further in view of Fortenberry (6,005,939).

Regarding claim 13, Bell in view of Mao and further in view of Robinson and further in view of Gurantz and further in view of Sambamurthy and further in view of Kim and further in view of Kim discloses all limitation of claim 12.

Bell in view of Mao and further in view of Robinson and further in view of Gurantz and further in view of Sambamurthy and further in view of Kim and further in view of Kim does not explicitly discloses [wherein the encryption utilizes] Date Encryption Standard ("DES").

Fortenberry teaches [wherein the encryption utilizes] Date Encryption Standard ("DES") (col. 9, lines 43-47).

It would be obvious to one of ordinary in the art at the time of invention to modify Bell in view of Mao and further in view of Robinson and further in view of Gurantz and further in view of Sambamurthy and further in view of Kim and further in view of Kim to include wherein the encryption utilizes] Date Encryption Standard ("DES"), as taught by Fortenberry, in order to standardize the encryption method by using the industry wide know Encryption method in DES (col. 9, lines 43-47).

8. Claims 15 is rejected under 35 U.S.C. 103(a) as being unpatentable over Bell in view of Mao and further in view of Robinson and further in view of Gurantz and further in view of Youge (6,522,650 B1).

Regarding claim 15, Bell in view of Mao and further in view of Robinson and further in view of Gurantz discloses all limitation of claim 14, and further discloses wherein the transmitter utilizes OFDM applications.

Bell in view of Mao and further in view of Robinson and further in view of Gurantz does not explicitly disclose [wherein the transmitter] utilizes padding [to utilize an integral number of OFDM symbols].

Youge teaches [wherein the transmitter] utilizes padding [to utilize an integral number of OFDM symbols] (Fig. 3, el. 114, col. 8, lines 22-39).

It would be obvious to one of ordinary in the art at the time of invention to modify Bell in view of Mao and further in view of Robinson and further in view of Gurantz to include [wherein the transmitter] utilizes padding [to utilize an integral number of OFDM symbols], as taught by Youge, in order to provide a separation between two data block and indicates the ending of one data block.

9. Claim 46 is rejected under 35 U.S.C. 103(a) as being unpatentable over Bell (6,052,380) in view of Moorti (US 2007/0002878).

Regarding claim 46, Bell discloses a modem for communication to at least one node across a at least one channel coaxial network (Fig. 1 and 2, el. 200), the modem comprising:

a transmitter (Fig. 2, col. 7, lines 55-60);

a MAC layer in signal communication with the transmitter (col. 7, lines 61-col. 8, lines 67, Ethernet physical layer signal communication in the network),

wherein the MAC layer utilizes at least one probe packet for modulation optimization (col. 8, lines, DMT modulation)

Wherein the transmitter communicates the at least one transmit packets (Fig. 2, col. 7, lines 55-60).

Bell does not explicitly discloses wherein the MAC layer utilizes at least one probe packet as an IQ imbalance and hardware/RF optimization probe whose purpose is to be able to reduce hardware complexity and compensate for certain hardware imperfections

Moorti teaches wherein the MAC layer utilizes at least one probe packet as an IQ imbalance and hardware/RF optimization probe whose purpose is to be able to reduce hardware complexity and compensate for certain hardware imperfections (Fig. 4 and 9, para. 74, para. 81, para. 83, IQ imbalance estimate module, and control module to perform hardware optimization probe).

It would be obvious to one of ordinary in the art at the time of invention to modify Bell to include wherein the MAC layer utilizes at least one probe packet as an IQ imbalance and hardware/RF optimization probe whose purpose is to be able to reduce hardware complexity and compensate for certain hardware imperfections, as taught by Moorti, in order to compensate the deficiency in the hardware module (abstract).

10. Claim 47 is rejected under 35 U.S.C. 103(a) as being unpatentable over Bell (6,052,380) in view of Kim (US 2004/0218557) and further in view of Goh (US 7,542,411 B1).

Regarding claim 1, Bell discloses a modem for communication to at least one node across a at least one channel coaxial network (Fig. 1 and 2, el. 200), the modem comprising:

a transmitter (Fig. 2, col. 7, lines 55-60);

a MAC layer in signal communication with the transmitter (col. 7, lines 61-col. 8, lines 67, Ethernet physical layer signal communication in the network),

wherein the MAC layer utilizes at least one probe packet for modulation optimization (col. 8, lines, DMT modulation)

Wherein the transmitter communicates the at least one transmit packets (Fig. 2, col. 7, lines 55-60).

Bell does not explicitly wherein the MAC layer utilizes at least one probe packet as an echo profile probe whose purpose is to measure node delay spread on the network in order to optimize the preamble and cyclic prefix requirements or other parameters;

Kim teaches wherein the MAC layer utilizes at least one probe packet whose purpose is to measure node delay spread on the network (para. 8-11, node delay).

It would be obvious to one of ordinary in the art at the time of invention to modify Bell to include wherein the MAC layer utilizes at least one probe packet whose purpose is to measure node delay spread on the network, as taught by Kim, in order to find the optimum route in the MAC layer routing protocol (para. 11).

Bell in view of Kim does not explicitly discloses MAC layer utilizes at least on probe packets as an echo profile probe to optimized the preamble and cyclic prefix requirements or other parameters,

Goh teaches discloses on probe packets as an echo profile probe whose purpose is to measure node delay spread on the network in order to optimized the preamble and cyclic prefix requirements or other parameters (Fig. 4, col. 3, lines 31-50)

It would be obvious to one of ordinary in the art at the time of invention to modify Bell to include on on probe packets as an echo profile probe whose purpose is to measure node delay spread on the network in order to optimized the preamble and cyclic prefix requirements or other parameters, as taught by Goh, in order for a system to attain optimum communication (abstract).

Conclusion

THIS ACTION IS MADE FINAL. Applicant is reminded of the extension of time policy as set forth in 37 CFR 1.136(a).

A shortened statutory period for reply to this final action is set to expire THREE MONTHS from the mailing date of this action. In the event a first reply is filed within TWO MONTHS of the mailing date of this final action and the advisory action is not mailed until after the end of the THREE-MONTH shortened statutory period, then the shortened statutory period will expire on the date the advisory action is mailed, and any extension fee pursuant to 37 CFR 1.136(a) will be calculated from the mailing date of the advisory action. In no event, however, will the statutory period for reply expire later than SIX MONTHS from the mailing date of this final action.

Any inquiry concerning this communication or earlier communications from the examiner should be directed to CAI CHEN whose telephone number is (571)270-5679. The examiner can normally be reached on 7:30 am to 4:30 pm.

If attempts to reach the examiner by telephone are unsuccessful, the examiner's supervisor, Brian Pendleton can be reached on 571-272-7527. The

fax phone number for the organization where this application or proceeding is assigned is 571-273-8300.

Information regarding the status of an application may be obtained from the Patent Application Information Retrieval (PAIR) system. Status information for published applications may be obtained from either Private PAIR or Public PAIR. Status information for unpublished applications is available through Private PAIR only. For more information about the PAIR system, see http://pair-direct.uspto.gov. Should you have questions on access to the Private PAIR system, contact the Electronic Business Center (EBC) at 866-217-9197 (toll-free). If you would like assistance from a USPTO Customer Service Representative or access to the automated information system, call 800-786-9199 (IN USA OR CANADA) or 571-272-1000.

/CAI CHEN/
Examiner, Art Unit 2425

/Brian T Pendleton/
Supervisory Patent Examiner, Art Unit 2425

Notice of References Cited	Application/Control No. 11/241,748	Applicant(s)/Patent Under Reexamination MONK ET AL.	
	Examiner CAI CHEN	Art Unit 2425	Page 1 of 1

U.S. PATENT DOCUMENTS

*		Document Number Country Code-Number-Kind Code	Date MM-YYYY	Name	Classification
*	A	US-2002/0186797	12-2002	Robinson, Adrian Paul	375/341
	B	US-			
	C	US-			
	D	US-			
	E	US-			
	F	US-			
	G	US-			
	H	US-			
	I	US-			
	J	US-			
	K	US-			
	L	US-			
	M	US-			

FOREIGN PATENT DOCUMENTS

*		Document Number Country Code-Number-Kind Code	Date MM-YYYY	Country	Name	Classification
	N					
	O					
	P					
	Q					
	R					
	S					
	T					

NON-PATENT DOCUMENTS

*		Include as applicable: Author, Title Date, Publisher, Edition or Volume, Pertinent Pages)
	U	
	V	
	W	
	X	

*A copy of this reference is not being furnished with this Office action. (See MPEP § 707.05(a).)
Dates in MM-YYYY format are publication dates. Classifications may be US or foreign.

Index of Claims	Application/Control No.	Applicant(s)/Patent Under Reexamination
	11241748	MONK ET AL.
	Examiner	**Art Unit**
	CAI CHEN	2425

✓	Rejected	-	Cancelled	N	Non-Elected	A	Appeal
=	Allowed	÷	Restricted	I	Interference	O	Objected

☐ Claims renumbered in the same order as presented by applicant ☐ CPA ☐ T.D. ☐ R.1.47

CLAIM		DATE								
Final	Original	03/20/2009	09/05/2009	03/17/2010	09/22/2010					
	1	✓	✓	✓	✓					
	2	✓	✓	✓	✓					
	3	✓	✓	✓	✓					
	4	✓	✓	✓	✓					
	5	✓	✓	✓	✓					
	6	✓	✓	✓	✓					
	7	✓	✓	✓	✓					
	8	✓	-	✓	✓					
	9	✓	✓	✓	✓					
	10	✓	✓	✓	✓					
	11	✓	✓	✓	✓					
	12	✓	✓	✓	✓					
	13	✓	✓	✓	✓					
	14	✓	✓	✓	✓					
	15	✓	✓	✓	✓					
	16	✓	✓	✓	✓					
	17	✓	✓	✓	✓					
	18	✓	✓	✓	✓					
	19	✓	✓	✓	✓					
	20	✓	✓	✓	✓					
	21	✓	✓	✓	✓					
	22	✓	✓	✓	✓					
	23	✓	✓	✓	✓					
	24	✓	✓	✓	✓					
	25	✓	✓	✓	✓					
	26	✓	-	-	-					
	27	✓	-	-	-					
	28	✓	-	-	-					
	29	✓	-	-	-					
	30	✓	-	-	-					
	31	✓	-	-	-					
	32	✓	-	-	-					
	33	✓	-	-	-					
	34	✓	-	-	-					
	35	✓	-	-	-					
	36	✓	-	-	-					

Index of Claims	Application/Control No.	Applicant(s)/Patent Under Reexamination
	11241748	MONK ET AL.
	Examiner	**Art Unit**
	CAI CHEN	2425

✓	Rejected	-	Cancelled	N	Non-Elected	A	Appeal
=	Allowed	÷	Restricted	I	Interference	O	Objected

☐ Claims renumbered in the same order as presented by applicant ☐ CPA ☐ T.D. ☐ R.1.47

CLAIM		DATE								
Final	Original	03/20/2009	09/05/2009	03/17/2010	09/22/2010					
	37	✓	-	-	-					
	38	✓	-	-	-					
	39	✓	-	-	-					
	40	✓	-	-	-					
	41	✓	-	-	-					
	42	✓	-	-	-					
	43	✓	-	-	-					
	44	✓	-	-	-					
	45	✓	-	-	-					
	46			✓	✓					
	47			✓	✓					

Search Notes	Application/Control No.	Applicant(s)/Patent Under Reexamination
	11241748	MONK ET AL.
	Examiner	**Art Unit**
	CAI CHEN	2425

SEARCHED

Class	Subclass	Date	Examiner

SEARCH NOTES

Search Notes	Date	Examiner
Inventor Searches were performed in East	3/20/2009	cc
Class 725 and 370 are text searches	3/20/2009	cc

INTERFERENCE SEARCH

Class	Subclass	Date	Examiner

IN THE UNITED STATES PATENT AND TRADEMARK OFFICE

In Re Application of:
Anton Monk et al.

Serial No.: 11/241,748

Filed: 29-Sep-2005

For: Physical Layer Transmitter For Use In A Broadband Local Area Network

Group Art Unit: 2425

Confirmation No. 2829

RESPONSE TO FINAL OFFICE ACTION

Mail Stop: Amendment
Commissioner for Patents
P.O. Box 1450
Alexandria, VA 22313-1450

Attention: CAI Y. CHEN
Examiner

Dear Sir:

Applicants submit the following in response to the Final Office Action, mailed on October 1, 2010.

Amendments to the Claims begin on page 2 of this paper.

Remarks/Arguments begin on page 7 of this paper.

I hereby certify that this correspondence is being electronically deposited with the Commissioner for Patents through the USPTO electronic filing system, on:

February 1, 2011
(Date of Deposit)
Tim Ellis
(Name of Person Making Deposit)
/Tim Ellis/
(Signature)

AMENDMENTS TO THE CLAIMS

1. (Previously Amended) A modem for communication to at least one node across at least one channel of a coaxial network, the modem comprising:

a transmitter; and

a MAC layer in signal communication with the transmitter,

wherein the MAC layer utilizes at least one probe packet for computing a network frequency response characterizing a first channel of the coaxial network and determining modulation optimization for the first channel based on the network frequency response, and

wherein the transmitter communicates the at least one transmit packet.

2. (Original) The modem of claim 1, wherein the transmitter is a baseband transmitter.

3. (Original) The modem of claim 1, wherein the transmitter is a Radio Frequency ("RF") transmitter.

4. (Original) The modem of claim 1, wherein the packet communication utilizes services.

5. (Original) The modem of claim 1, wherein the transmitter communicates with at least one node utilizing packet communications using Time Division Duplex ("TDD").

6. (Original) The modem of claim 5, wherein the packet communication utilizes

formatting that includes

a preamble; and

a packet of data.

7. (Previously Amended) The modem of claim 6, wherein the packet communications includes at least one robust packet.

8. (Previously Canceled)

9. (Original) The modem of claim 6, wherein the formatting includes packet encryption.

10. (Original) The modem of claim 6, wherein the scrambling formatting includes Reed Solomon ("RS") encoding.

11. (Original) The modem of claim 10, wherein the packet is padded to include an integral number of similar size and coding type RS codewords.

12. (Original) The modem of claim 6, wherein the formatting utilizes packet encryption.

13. (Previously Amended) The modem of claim 12, wherein the encryption utilizes Date Encryption Standard ("DES").

14. (Original) The modem of claim 1, wherein the transmitter utilizes orthogonal frequency division multiplexing ("OFDM") modulation.

15. (Original) The modem of claim 14, wherein the transmitter utilizes padding to utilize an integral number of OFDM symbols.

16. (Previously Amended) The modem of claim 1, wherein the MAC layer utilizes orthogonal frequency division multiplexing ("OFDM") bit-loading.

17. (Original) The modem of claim 16, wherein the formatting utilizes scrambling.

18. (Original) The modem of claim 17, wherein the scrambling is byte scrambling.

19. (Original) The modem of claim 18, wherein the scrambling is OFDM bin scrambling.

20. (Original) The modem of claim 14 wherein the transmitter utilizes a modulation type on each of its subcarriers chosen from the group consisting of:

bipolar phase shift keying ("BPSK");

quadrature phase shift keying ("QPSK");

8 quadrature amplitude modulation ("QAM");

16 QAM;

32 QAM;

64 QAM;

128 QAM; and

256 QAM.

21. (Original) The modem of claim 20, wherein the modulation type is obtained from a translation table that maps data to waveform data.

22. (Original) The modem of claim 21, wherein an amplitude factor is applied to the various modulation types.

23. (Original) The modem of claim 1, wherein the transmitter is capable of producing and transmitting a probe signal to the at least one node.

24. (Original) The modem of claim 1, wherein the transmitter is capable of producing a robust signal that includes redundant, repetitious subcarriers.

25. (Original) The modem of claim 24, wherein the transmitter transmits robust repetitious subcarriers according to a predetermined format.

26-45. (Previously Canceled)

46. (Currently Amended) A modem for communication to at least one node across at least one channel of a coaxial network, the modem comprising:

a transmitter; and

a MAC layer in signal communication with the transmitter,

wherein the MAC layer utilizes at least one probe packet as an IQ imbalance and hardware/RF optimization probe ~~whose purpose is to be able~~ to reduce hardware complexity and compensate for certain hardware imperfections; and

wherein the transmitter communicates the at least one transmit packet.

47. (Previously Added) A modem for communication to at least one node across at least one channel of a coaxial network, the modem comprising:

a transmitter; and

a MAC layer in signal communication with the transmitter,

wherein the MAC layer utilizes at least one probe packet as an echo profile probe whose purpose is to measure node delay spread on the network in order to optimize the preamble and cyclic prefix requirements or other parameters; and

wherein the transmitter communicates the at least one transmit packet.

REMARKS

Claims 1-7, 9-25, 46 and 47 are currently pending. Claims 1, 46, and 47 are independent. Claim 46 is currently amended. Claims 8, 26-45 were previously canceled. No new matter is introduced by these amendments and their entry is respectfully requested.

In view of the above amendments and following remarks, each of the presently pending claims in this application is believed to be in immediate condition for allowance. Accordingly, the Examiner is respectfully requested to reconsider and withdraw the outstanding rejections of the claims and to pass this application to issue. Alternatively, Applicant's respectfully request that the Examiner enter the amendment presented here, since it places the application in better condition for appeal. If it is determined that a telephone conference would expedite the prosecution of this application, the Examiner is invited to telephone the undersigned at the number given below.

Rejections under 35 U.S.C. § 103

Claim 1 is rejected under 35 U.S.C. §103(a) for allegedly being unpatentable over Bell (US Patent No. 6,052,380) in view of Robinson (US Patent Publication 2002/0186797). Claims 2-5, 10, 11, 14, 16-25 are rejected under 35 U.S.C. §103(a) for allegedly being unpatentable over Bell in view of Mao, and further in view of Robinson and Gurantz.

Claim 6 is rejected under 35 U.S.C. §103(a) for allegedly being unpatentable over Bell in view of Mao, further in view of Robinson, Gurantz, and further in view of Sambamurthy (US Patent No. 6,085,248).

Claim 7 is rejected under 35 U.S.C. §103(a) for allegedly being unpatentable over Bell in view of Mao, further in view of Robinson, Gurantz, and further in view of Orava (US Patent Pub. No. 2002/0071477).

Claims 9 and 12 are rejected under 35 U.S.C. §103(a) for allegedly being unpatentable over Bell in view of Mao, Robinson, Gurantz, Sambamurthy, and further in view of Kim (US Patent Pub. No. 2004/0170157).

Claim 13 is rejected under 35 U.S.C. §103(a) for allegedly being unpatentable over Bell in view of Mao, further in view of Gurantz, Robinson, Sambamurthy, Kim, and further in view of Fortenberry (US Patent No. 6,005,939).

Claim 15 is rejected under 35 U.S.C. §103(a) for allegedly being unpatentable over Bell in view of Mao, Robinson, Gurantz, and further in view of Youge (US Patent No. 6,522,650).

Claim 46 is rejected under 35 U.S.C. §103(a) for allegedly being unpatentable over Bell in view of Moorti (US Patent Pub. No. 2007/0002878).

Claim 47 is rejected under 35 U.S.C. §103(a) for allegedly being unpatentable over Bell in view of Kim, and further in view of Goh (US Patent No. 7,542,411). Applicants respectfully traverse these rejections based on the current claim amendments and the following remarks.

Independent Claim 1

Claim 1 as amended is patentable over Bell, Robinson and Mao, whether considered alone or in combination, because Bell, Robinson and Mao fail to teach or suggest "wherein the MAC layer utilizes at least one probe packet for computing a network frequency response characterizing a first channel of the coaxial network and determining modulation optimization for the first channel based on the network frequency response," as recited in claim 1.

Bell discloses an improved network adapter and architecture which combines the Ethernet bus access protocol with a digital subscriber line-based (DSL-based) physical layer driver to provide low cost, compatibility advantages associated with Ethernet, improved reliability, improved robustness, improved bandwidth, and noise resistance of the DSL layer. (*See*, Bell, Abstract.) As recognized in the Office Action, Bell fails to teach or suggest a MAC layer that utilizes at least one probe packet for network frequency response purposes. Similarly, Bell fails to disclose utilizing at least one probe packet for computing a network frequency response that characterizes a channel of the coaxial network, or determining modulation optimization for a channel based on a network frequency response, as required by claim 1 as amended. In view of this, claim 1 is patentable over Bell.

Applicants assume that the Examiner mistakenly left the paragraph regarding Mao in the office action from the previously mailed office action, since there is no mention in the opening paragraph that indicates that the Examiner continues to rely upon Mao in rejecting Claim 1. In fact, the Examiner indicated in the current office action that the arguments that Applicants made in response to the previously mailed office action were now moot in light of "new grounds for rejection", which Applicant assumes refer to the combination of Bell and Robinson.

With that said, Applicants once again contend that the prior art completely fails to show the limitation recited in claims, such as Claim 1, regarding "utilizes at least one probe packet for computing a network frequency response characterizing a first channel of the coaxial network and determining modulation optimization for the first channel based on the network frequency response."

That is, Robinson fails to cure this deficiency of Bell and Mao. The Examiner points to paragraphs 62-64 of Robinson, and particularly states that Robinson discloses that "channel frequency response is estimated and quadrature modulation is applied". However, this is not an accurate characterization of what Robinson discloses. In fact, what Robinson discloses in paragraphs 62-64 is:

> [0062] **The output of the OFDM decoder 108 is then applied to a channel equalizer 110. This estimates the channel frequency response**, then divides the input signal by the estimated response, to output an equalised (sic) constellation. (emphasis added)
>
> [0063] Now the signal is applied to a circuit 112 which combines the functions of measurement of channel state, and demodulation or demapping of the quadrature modulated constellations. The demodulation converts the signal back from QPSK, 16-QAM, or 64-QAM to a simple data stream, by selecting the nominal constellation points which are nearest to the actual constellation points received; these may have suffered some distortion in the transmission channel. At the same time the circuit 112 estimates the likelihood or level of certainty that the decoded

> constellation points do in fact represent the points they have been interpreted as. As a result a likelihood or confidence value is assigned to each of the decoded bits.
>
> [0064] The output of the metric assignment and demapping circuit 112 is now applied to an error corrector block 120 which makes use of the redundancy which was introduced in the forward error corrector 30 in the transmitter.

There is no disclosure at all of applying quadrature modulation, as indicated by the Examiner. Paragraphs 62-64 discuss reception and demodulation. The fact that the channel equalizer estimates the channel frequency response has nothing to do with probing the channel to compute the network frequency response and determining modulation optimization for the channel based on this computation. That is, nothing in Robinson teaches or discloses anything about calculating frequency response of a channel in order to determine modulation optimization. The estimate of the frequency response of the channel in Robinson is merely a bi-product of the equalization that is done during reception and demodulation. This is completely clear from the fact that Robinson states:

> This estimates the channel frequency response, then **divides the input signal by the estimated response, to output an equalised (sic) constellation**.

Accordingly, since none of the references cited by the Examiner either teach or suggest the limitation of "the MAC layer utilizes at least one probe packet for computing a network frequency response **characterizing a first channel of the coaxial network and determining modulation optimization for the first channel** based on the network frequency response", Applicants traverse the Examiner rejection of Claim 1.

In view of above, claim 1 is patentable over both Bell, Mao and Robinson whether considered alone or in combination and Applicants, therefore, respectfully request that the Examiner reconsider and withdraw the rejection of claim 1 under 35 U.S.C. §103(a).

Dependent Claims 2-7, and 9-25

Claims 2-7, and 9-25 depend from claim 1 and, as such, are patentable over Bell, Mao, and Robinson, whether considered alone or in combination, for at least the same reasons provided above with respect to claim 1. In addition, neither Gurantz, Sambamurthy, Orava, Kim, Fortenberry, Youge, Moorti, nor Goh cures the deficiencies identified above with respect to Bell, Robinson and Mao. Accordingly, claims 2-7, and 9-25 are patentable over Bell, Mao, Robinson, Gurantz, Sambamurthy, Orava, Kim, Fortenberry, Youge Moorti, or Goh. Applicants, therefore, respectfully request that the Examiner reconsider and withdraw the rejection of claims 2-7, and 9-25 under 35 U.S.C. §103(a).

Independent Claim 46

Claim 46 patentable over Bell and Moorti because neither Bell nor Moorti teaches or suggests "wherein the MAC layer utilizes at least one probe packet as an IQ imbalance and hardware/RF optimization probe ~~whose purpose is to be able~~ to reduce hardware complexity and compensate for certain hardware imperfections," as recited by claim 46.

Applicants contend that while MPEP 2111.04 indicates that the claim scope is not limited by claim language that suggests or makes optional, but that does not require steps to be performed, this is not the case in the present Claim 46. Applicants have amended Claim 46 to **remove the language** "whose purpose is to be able" in order to make clear that the invention recited in Claim 46 is **limited by the language** that the "MAC layer utilizes at least one probe…to reduce the hardware complexity and compensate for certain hardware imperfections".

As recognized in the Office Action, Bell fails to teach or suggest a MAC layer that utilizes at least one probe packet as an IQ imbalance and hardware/RF optimization probe that reduces hardware complexity and compensates for certain hardware imperfections. As such, claim 46 is patentable over Bell for at least this reason. Additionally, Claim 46 is patentable over Moorti because fails to cure this deficiency.

Moorti discloses and describes a wireless communication baseband transceiver including a baseband transmit processing module and a baseband receive processing module. According to

Moorti, the baseband transmit processing module includes an encoding module, an interleaving module, a plurality of symbol mapping modules, a plurality of domain conversion modules, a plurality of cyclic prefix modules, a plurality of compensation modules, and a control module that is operably coupled to produce preamble set up information and payload set up information based on a mode of a plurality of protocol modes. (*See,* Moorti, Abstract.) In Figure 4 and paragraph [0050], Moorti describes a portion of the baseband transmit processing module 100, wherein the control module 130 of the module 100 includes, among other things, a medium access control (MAC)/physical (PHY) interface 210. In Figure 9 and paragraph [0079], Moorti describes a portion of the baseband receive processing module 100, wherein the control module 320 of the module 100 includes, among other things, a packet protocol control module 370, a plurality of carrier sense modules 372, 374, a combining module 376, a frequency and phase offset determining module 378, a coarse/fine frequency estimation 380, a plurality of IQ imbalance estimation modules 366, 368, and a MAC/PHY interface 386.

However, nowhere does Moorti ever teach or suggest that a "MAC layer utilizes at least one probe packet as an IQ imbalance and hardware/RF optimization" as recited and required by Claim 46. In addition, with respect to IQ imbalance, Moorti merely states that the IQ imbalance estimation modules monitor the output of the IQ compensation modules and determine the corresponding IQ imbalance from there. (*See*, *Id.*, paragraph [0081].) Moorti is utterly silent with respect to use of the IQ imbalance and hardware/RF optimization probe.

The baseband receive processing module includes a plurality of receive compensation modules, a plurality of cyclic prefix removal modules, a plurality of receive domain conversion modules, an equalizing module, a plurality of demapping modules, a deinterleaving module, a decoding module, and a receive control module that is operably coupled to determine the mode from the plurality of protocol modes and the compensation control signals based on the at least one compensated stream of symbols.

Accordingly, for at least the foregoing reasons, claim 46 is patentable over Bell and Moorti. Applicants, therefore, respectfully request that the Examiner reconsider and withdraw the rejection of claim 46 under 35 U.S.C. §103(a).

Independent Claim 47

Claim 47 is patentable over Bell, Kim and Goh at least because Goh is ***not considered prior art with respect to this application***. As discussed during the Examiner's Interview of July 22, 2010, and previously stated in the response filed on 7/27/10, Goh claims priority from and the benefit of US Provisional Application Serial No. 60/633,257, filed on December 3, 2004. The current application, on the other hand, claims priority from and the benefit of a number of US provisional applications (Serial Nos. 60/633,091, 60/632,797, 60/633,002, and 60/632,856) which were all filed on December 2, 2004. As such, ***this application pre-dates Goh*** rendering Goh non-prior art.

Additionally, at the time claimed invention was made, this application and Goh were owned by the same entity, Entropic Communications Inc. As such, under 35 U.S.C. §103(c), Goh is unable to preclude patentability of this application under 35 U.S.C. §103(a).

The Examiner indicated in the office action of 10/1/10 that Applicants argue that "Goh does not teach…." However, that is not the case. Rather, the argument that Applicants are made is that Goh is not prior art.

Furthermore, claim 47 is patentable over Bell and Kim because neither Bell or Kim, whether considered alone or in combination, teaches or suggests "wherein the MAC layer utilizes at least one probe packet as an echo profile probe whose purpose is to measure node delay spread on the network in order to optimize the preamble and cyclic prefix requirements or other parameters," as recited and required by claim 47.

As recognized in the Office Action, Bell fails to teach or suggest a MAC layer that utilizes at least one probe packet as an echo profile probe whose purpose is to measure node delay spread on the network in order to optimize the preamble and cyclic prefix requirements or other parameters. As such, claim 46 is patentable over Bell for at least this reason. Additionally, claim 47 is patentable over Kim because fails to cure this deficiency.

Kim discloses a method for packet re-flooding in a wireless ad hoc network for transmitting a broadcast packet from a source node to a destination node. In paragraph [0008-

0011], Kim describes preventing channel collisions using CSMA/CA (Carrier Sense Multiple Access/Collision Avoidance), which is a MAC (media access control) layer protocol. Kim explains how under CSMA/CA, each node transmits a confirmation signal and starts transmitting the packets only after confirming that there would be no collision. Kim also explains that when a collision occurs in the network the nodes delay packet transmission for a random period of time and attempt re-transmission later. Nevertheless, nowhere does Kim ever teach or suggest "wherein the MAC layer utilizes at least one probe packet as an echo profile probe whose purpose is to measure node delay spread on the network in order to optimize the preamble and cyclic prefix requirements or other parameters," as recited in claim 47.

Accordingly, for at least the foregoing reasons, claim 47 is patentable over Bell, Kim, and Goh. Applicants, therefore, respectfully request that the Examiner reconsider and withdraw the rejection of claim 47 under 35 U.S.C. §103(a).

CONCLUSION

In view of the above, each of the presently pending claims in this application is believed to be in immediate condition for allowance. Accordingly, the Examiner is respectfully requested to reconsider and withdraw the outstanding rejection of the claims and to pass this application to issue. Alternatively, Applicants respectfully request the Examiner to enter the amendments made herein, since they place the application in better condition for allowance.

This is a response to the Final Office Action mailed on October 1, 2010, and as such Applicants respectfully request for a one month extension of time under 37 C.F.R. 1.136.

In the event the U.S. Patent and Trademark office determines that an additional extension and/or other relief is required, Applicants petition for any required relief including extensions of time and authorizes the Commissioner to charge the cost of such petitions and/or other fees due in connection with the filing of this document to Deposit Account No. 50-4613 referencing the Attorney Docket No. noted above.

Respectfully submitted,

Dated: February 1, 2011

By: /Bruce W. Greenhaus/
Bruce W. Greenhaus
Attorney for Applicant
Registration No. 37,339

Entropic Communications, Inc.
6290 Sequence Drive
San Diego, California 92121
Telephone: (619) 980-2612
e-mail address: PatentTeam@Entropic.com

PTO/SB/22 (07-09)
Approved for use through 07/31/2012. OMB 0651-0031
U.S. Patent and Trademark Office; U.S. DEPARMENT OF COMMERCE
Under the paperwork Reduction Act of 1995, no persons are required to respond to a collection of information unless it displays a valid OMB control number.

PETITION FOR EXTENSION OF TIME UNDER 37 CFR 1.136(a) **FY 2009** (*Fees pursuant to the Consolidated Appropriations Act, 2005 (H.R. 4818).*)	Docket Number (Optional) E040004USU2
Application Number 11/241,748	Filed 29-Sep-2005
For Physical Layer Transmitter For Use In A Broadband Local Area Network	
Art Unit 2425	Examiner CAI Y. CHEN

This is a request under the provisions of 37 CFR 1.136(a) to extend the period for filing a reply in the above identified application.

The requested extension and fee are as follows (check time period desired and enter the appropriate fee below):

		Fee	Small Entity Fee	
☑	One month (37 CFR 1.17(a)(1))	$130	$65	$ 130.00
☐	Two months (37 CFR 1.17(a)(2))	$490	$245	$
☐	Three months (37 CFR 1.17(a)(3))	$1110	$555	$
☐	Four months (37 CFR 1.17(a)(4))	$1730	$865	$
☐	Five months (37 CFR 1.17(a)(5))	$2350	$1175	$

☐ Applicant claims small entity status. See 37 CFR 1.27.

☐ A check in the amount of the fee is enclosed.

☐ Payment by credit card. Form PTO-2038 is attached.

☑ The Director has already been authorized to charge fees in this application to a Deposit Account.

☑ The Director is hereby authorized to charge any fees which may be required, or credit any overpayment, to Deposit Account Number 504613.

WARNING: Information on this form may become public. Credit card information should not be included on this form. Provide credit card information and authorization on PTO-2038.

I am the

☐ applicant/inventor.

☐ assignee of record of the entire interest. See 37 CFR 3.71.
Statement under 37 CFR 3.73(b) is enclosed (Form PTO/SB/96).

☑ attorney or agent of record. Registration Number 37339

☐ attorney or agent under 37 CFR 1.34.
Registration number if acting under 37 CFR 1.34 _____

/Bruce W. Greenhaus/	February 1, 2011
Signature	Date
Bruce W. Greenhaus	(619) 980-2612
Typed or printed name	Telephone Number

NOTE: Signatures of all the inventors or assignees of record of the entire interest or their representative(s) are required. Submit multiple forms if more than one signature is required, see below.

☑ Total of Two forms are submitted.

This collection of information is required by 37 CFR 1.136(a). The information is required to obtain or retain a benefit by the public which is to file (and by the USPTO to process) an application. Confidentiality is governed by 35 U.S.C. 122 and 37 CFR 1.11 and 1.14. This collection is estimated to take 6 minutes to complete, including gathering, preparing, and submitting the completed application form to the USPTO. Time will vary depending upon the individual case. Any comments on the amount of time you require to complete this form and/or suggestions for reducing this burden, should be sent to the Chief Information Officer, U.S. Patent and Trademark Office, U.S. Department of Commerce, P.O. Box 1450, Alexandria, VA 22313-1450. DO NOT SEND FEES OR COMPLETED FORMS TO THIS ADDRESS. **SEND TO: Commissioner for Patents, P.O. Box 1450, Alexandria, VA 22313-1450.**

If you need assistance in completing the form, call 1-800-PTO-9199 and select option 2.

Privacy Act Statement

The Privacy Act of 1974 (P.L. 93-579) requires that you be given certain information in connection with your submission of the attached form related to a patent application or patent. Accordingly, pursuant to the requirements of the Act, please be advised that: (1) the general authority for the collection of this information is 35 U.S.C. 2(b)(2); (2) furnishing of the information solicited is voluntary; and (3) the principal purpose for which the information is used by the U.S. Patent and Trademark Office is to process and/or examine your submission related to a patent application or patent. If you do not furnish the requested information, the U.S. Patent and Trademark Office may not be able to process and/or examine your submission, which may result in termination of proceedings or abandonment of the application or expiration of the patent.

The information provided by you in this form will be subject to the following routine uses:

1. The information on this form will be treated confidentially to the extent allowed under the Freedom of Information Act (5 U.S.C. 552) and the Privacy Act (5 U.S.C 552a). Records from this system of records may be disclosed to the Department of Justice to determine whether disclosure of these records is required by the Freedom of Information Act.
2. A record from this system of records may be disclosed, as a routine use, in the course of presenting evidence to a court, magistrate, or administrative tribunal, including disclosures to opposing counsel in the course of settlement negotiations.
3. A record in this system of records may be disclosed, as a routine use, to a Member of Congress submitting a request involving an individual, to whom the record pertains, when the individual has requested assistance from the Member with respect to the subject matter of the record.
4. A record in this system of records may be disclosed, as a routine use, to a contractor of the Agency having need for the information in order to perform a contract. Recipients of information shall be required to comply with the requirements of the Privacy Act of 1974, as amended, pursuant to 5 U.S.C. 552a(m).
5. A record related to an International Application filed under the Patent Cooperation Treaty in this system of records may be disclosed, as a routine use, to the International Bureau of the World Intellectual Property Organization, pursuant to the Patent Cooperation Treaty.
6. A record in this system of records may be disclosed, as a routine use, to another federal agency for purposes of National Security review (35 U.S.C. 181) and for review pursuant to the Atomic Energy Act (42 U.S.C. 218(c)).
7. A record from this system of records may be disclosed, as a routine use, to the Administrator, General Services, or his/her designee, during an inspection of records conducted by GSA as part of that agency's responsibility to recommend improvements in records management practices and programs, under authority of 44 U.S.C. 2904 and 2906. Such disclosure shall be made in accordance with the GSA regulations governing inspection of records for this purpose, and any other relevant (i.e., GSA or Commerce) directive. Such disclosure shall not be used to make determinations about individuals.
8. A record from this system of records may be disclosed, as a routine use, to the public after either publication of the application pursuant to 35 U.S.C. 122(b) or issuance of a patent pursuant to 35 U.S.C. 151. Further, a record may be disclosed, subject to the limitations of 37 CFR 1.14, as a routine use, to the public if the record was filed in an application which became abandoned or in which the proceedings were terminated and which application is referenced by either a published application, an application open to public inspection or an issued patent.
9. A record from this system of records may be disclosed, as a routine use, to a Federal, State, or local law enforcement agency, if the USPTO becomes aware of a violation or potential violation of law or regulation.

PTO/SB/31 (07-09)
Approved for use through 07/31/2012. OMB 0651-0031
U.S. Patent and Trademark Office; U.S. DEPARTMENT OF COMMERCE
Under the Paperwork Reduction Act of 1995, no persons are required to respond to a collection of information unless it displays a valid OMB control number.

NOTICE OF APPEAL FROM THE EXAMINER TO THE BOARD OF PATENT APPEALS AND INTERFERENCES

Docket Number (Optional): E040004USU2

I hereby certify that this correspondence is being facsimile transmitted to the USPTO or deposited with the United States Postal Service with sufficient postage as first class mail in an envelope addressed to "Commissioner for Patents, P.O. Box 1450, Alexandria, VA 22313-1450" [37 CFR 1.8(a)]
on _____

Signature _____

Typed or printed name _____

In re Application of: Anton Monk et al.

Application Number: 11/241,748

Filed: 29-Sep-2005

For: Physical Layer Transmitter For Use In A Broadband Local Area Network

Art Unit: 2425

Examiner: CAI Y. CHEN

Applicant hereby **appeals** to the Board of Patent Appeals and Interferences from the last decision of the examiner.

The fee for this Notice of Appeal is (37 CFR 41.20(b)(1)) $ 540.00

☐ Applicant claims small entity status. See 37 CFR 1.27. Therefore, the fee shown above is reduced by half, and the resulting fee is: $ _____

☐ A check in the amount of the fee is enclosed.

☐ Payment by credit card. Form PTO-2038 is attached.

☑ The Director has already been authorized to charge fees in this application to a Deposit Account.

☑ The Director is hereby authorized to charge any fees which may be required, or credit any overpayment to Deposit Account No. 504613 .

☑ A petition for an extension of time under 37 CFR 1.136(a) (PTO/SB/22) is enclosed.

WARNING: Information on this form may become public. Credit card information should not be included on this form. Provide credit card information and authorization on PTO-2038.

I am the

☐ applicant/inventor.

☐ assignee of record of the entire interest. See 37 CFR 3.71. Statement under 37 CFR 3.73(b) is enclosed. (Form PTO/SB/96)

☑ attorney or agent of record. Registration number 37339.

☐ attorney or agent acting under 37 CFR 1.34. Registration number if acting under 37 CFR 1.34. _____

/Bruce W. Greenhaus/
Signature

Bruce W. Greenhaus
Typed or printed name

(619) 980-2612
Telephone number

February 1, 2011
Date

NOTE: Signatures of all the inventors or assignees of record of the entire interest or their representative(s) are required. Submit multiple forms if more than one signature is required, see below*.

☑ *Total of Two forms are submitted.

This collection of information is required by 37 CFR 41.31. The information is required to obtain or retain a benefit by the public which is to file (and by the USPTO to process) an application. Confidentiality is governed by 35 U.S.C. 122 and 37 CFR 1.11, 1.14 and 41.6. This collection is estimated to take 12 minutes to complete, including gathering, preparing, and submitting the completed application form to the USPTO. Time will vary depending upon the individual case. Any comments on the amount of time you require to complete this form and/or suggestions for reducing this burden, should be sent to the Chief Information Officer, U.S. Patent and Trademark Office, U.S. Department of Commerce, P.O. Box 1450, Alexandria, VA 22313-1450. DO NOT SEND FEES OR COMPLETED FORMS TO THIS ADDRESS. **SEND TO: Commissioner for Patents, P.O. Box 1450, Alexandria, VA 22313-1450.**

If you need assistance in completing the form, call 1-800-PTO-9199 and select option 2.

Privacy Act Statement

The **Privacy Act of 1974 (P.L. 93-579)** requires that you be given certain information in connection with your submission of the attached form related to a patent application or patent. Accordingly, pursuant to the requirements of the Act, please be advised that: (1) the general authority for the collection of this information is 35 U.S.C. 2(b)(2); (2) furnishing of the information solicited is voluntary; and (3) the principal purpose for which the information is used by the U.S. Patent and Trademark Office is to process and/or examine your submission related to a patent application or patent. If you do not furnish the requested information, the U.S. Patent and Trademark Office may not be able to process and/or examine your submission, which may result in termination of proceedings or abandonment of the application or expiration of the patent.

The information provided by you in this form will be subject to the following routine uses:

1. The information on this form will be treated confidentially to the extent allowed under the Freedom of Information Act (5 U.S.C. 552) and the Privacy Act (5 U.S.C 552a). Records from this system of records may be disclosed to the Department of Justice to determine whether disclosure of these records is required by the Freedom of Information Act.
2. A record from this system of records may be disclosed, as a routine use, in the course of presenting evidence to a court, magistrate, or administrative tribunal, including disclosures to opposing counsel in the course of settlement negotiations.
3. A record in this system of records may be disclosed, as a routine use, to a Member of Congress submitting a request involving an individual, to whom the record pertains, when the individual has requested assistance from the Member with respect to the subject matter of the record.
4. A record in this system of records may be disclosed, as a routine use, to a contractor of the Agency having need for the information in order to perform a contract. Recipients of information shall be required to comply with the requirements of the Privacy Act of 1974, as amended, pursuant to 5 U.S.C. 552a(m).
5. A record related to an International Application filed under the Patent Cooperation Treaty in this system of records may be disclosed, as a routine use, to the International Bureau of the World Intellectual Property Organization, pursuant to the Patent Cooperation Treaty.
6. A record in this system of records may be disclosed, as a routine use, to another federal agency for purposes of National Security review (35 U.S.C. 181) and for review pursuant to the Atomic Energy Act (42 U.S.C. 218(c)).
7. A record from this system of records may be disclosed, as a routine use, to the Administrator, General Services, or his/her designee, during an inspection of records conducted by GSA as part of that agency's responsibility to recommend improvements in records management practices and programs, under authority of 44 U.S.C. 2904 and 2906. Such disclosure shall be made in accordance with the GSA regulations governing inspection of records for this purpose, and any other relevant (*i.e.*, GSA or Commerce) directive. Such disclosure shall not be used to make determinations about individuals.
8. A record from this system of records may be disclosed, as a routine use, to the public after either publication of the application pursuant to 35 U.S.C. 122(b) or issuance of a patent pursuant to 35 U.S.C. 151. Further, a record may be disclosed, subject to the limitations of 37 CFR 1.14, as a routine use, to the public if the record was filed in an application which became abandoned or in which the proceedings were terminated and which application is referenced by either a published application, an application open to public inspection or an issued patent.
9. A record from this system of records may be disclosed, as a routine use, to a Federal, State, or local law enforcement agency, if the USPTO becomes aware of a violation or potential violation of law or regulation.

Electronic Patent Application Fee Transmittal

Application Number:	11241748
Filing Date:	29-Sep-2005
Title of Invention:	Physical layer transmitter for use in a broadband local area network
First Named Inventor/Applicant Name:	Anton Monk
Filer:	Bruce Wayne Greenhaus/Tim Ellis
Attorney Docket Number:	E040004USU2

Filed as Large Entity

Utility under 35 USC 111(a) Filing Fees

Description	Fee Code	Quantity	Amount	Sub-Total in USD($)
Basic Filing:				
Pages:				
Claims:				
Miscellaneous-Filing:				
Petition:				
Patent-Appeals-and-Interference:				
Notice of appeal	1401	1	540	540
Post-Allowance-and-Post-Issuance:				
Extension-of-Time:				

Description	Fee Code	Quantity	Amount	Sub-Total in USD($)
Extension - 1 month with $0 paid	1251	1	130	130
Miscellaneous:				
			Total in USD ($)	**670**

Electronic Acknowledgement Receipt	
EFS ID:	9353528
Application Number:	11241748
International Application Number:	
Confirmation Number:	2829
Title of Invention:	Physical layer transmitter for use in a broadband local area network
First Named Inventor/Applicant Name:	Anton Monk
Customer Number:	77330
Filer:	Bruce Wayne Greenhaus/Tim Ellis
Filer Authorized By:	Bruce Wayne Greenhaus
Attorney Docket Number:	E040004USU2
Receipt Date:	01-FEB-2011
Filing Date:	29-SEP-2005
Time Stamp:	14:58:40
Application Type:	Utility under 35 USC 111(a)

Payment information:

Submitted with Payment	yes
Payment Type	Deposit Account
Payment was successfully received in RAM	$670
RAM confirmation Number	1323
Deposit Account	504613
Authorized User	
The Director of the USPTO is hereby authorized to charge indicated fees and credit any overpayment as follows: Charge any Additional Fees required under 37 C.F.R. Section 1.16 (National application filing, search, and examination fees) Charge any Additional Fees required under 37 C.F.R. Section 1.17 (Patent application and reexamination processing fees)	

Charge any Additional Fees required under 37 C.F.R. Section 1.19 (Document supply fees)

Charge any Additional Fees required under 37 C.F.R. Section 1.21 (Miscellaneous fees and charges)

File Listing:

Document Number	Document Description	File Name	File Size(Bytes)/ Message Digest	Multi Part /.zip	Pages (if appl.)
1		E040004USU2_Final-OA_Response_2-1-2011.pdf	146517 ff889da79304f8b7c2a8b99652afa8ab68f615c4	yes	15

Multipart Description/PDF files in .zip description

Document Description	Start	End
Amendment After Final	1	1
Claims	2	6
Applicant Arguments/Remarks Made in an Amendment	7	14
Amendment After Final	15	15

Warnings:

Information:

2	Extension of Time	E040004USU2_1Month-Ext_Form_2-1-2011.pdf	316693 e873c18b95df986f49601e99440d34c489d18a88	no	2

Warnings:

Information:

3	Notice of Appeal Filed	E040004USU2_Notice-of-Appeal_Form_2-1-2011.pdf	246126 3e8f200c967972a9f8de38315d82cb1b2137b3f4	no	2

Warnings:

Information:

4	Fee Worksheet (PTO-875)	fee-info.pdf	32097 abf812c8d634331ea306183fcea748e133ac4999	no	2

Warnings:

Information:

Total Files Size (in bytes):	741433

This Acknowledgement Receipt evidences receipt on the noted date by the USPTO of the indicated documents, characterized by the applicant, and including page counts, where applicable. It serves as evidence of receipt similar to a Post Card, as described in MPEP 503.

New Applications Under 35 U.S.C. 111
If a new application is being filed and the application includes the necessary components for a filing date (see 37 CFR 1.53(b)-(d) and MPEP 506), a Filing Receipt (37 CFR 1.54) will be issued in due course and the date shown on this Acknowledgement Receipt will establish the filing date of the application.

National Stage of an International Application under 35 U.S.C. 371
If a timely submission to enter the national stage of an international application is compliant with the conditions of 35 U.S.C. 371 and other applicable requirements a Form PCT/DO/EO/903 indicating acceptance of the application as a national stage submission under 35 U.S.C. 371 will be issued in addition to the Filing Receipt, in due course.

New International Application Filed with the USPTO as a Receiving Office
If a new international application is being filed and the international application includes the necessary components for an international filing date (see PCT Article 11 and MPEP 1810), a Notification of the International Application Number and of the International Filing Date (Form PCT/RO/105) will be issued in due course, subject to prescriptions concerning national security, and the date shown on this Acknowledgement Receipt will establish the international filing date of the application.

PTO/SB/06 (07-06)
Approved for use through 1/31/2007. OMB 0651-0032
U.S. Patent and Trademark Office; U.S. DEPARTMENT OF COMMERCE
Under the Paperwork Reduction Act of 1995, no persons are required to respond to a collection of information unless it displays a valid OMB control number.

PATENT APPLICATION FEE DETERMINATION RECORD

Substitute for Form PTO-875

Application or Docket Number	Filing Date	☐ To be Mailed
11/241,748	09/29/2005	

APPLICATION AS FILED – PART I

FOR	(Column 1) NUMBER FILED	(Column 2) NUMBER EXTRA	SMALL ENTITY RATE ($)	SMALL ENTITY FEE ($)	OR	OTHER THAN SMALL ENTITY RATE ($)	OTHER THAN SMALL ENTITY FEE ($)
☐ BASIC FEE (37 CFR 1.16(a), (b), or (c))	N/A	N/A	N/A			N/A	
☐ SEARCH FEE (37 CFR 1.16(k), (i), or (m))	N/A	N/A	N/A			N/A	
☐ EXAMINATION FEE (37 CFR 1.16(o), (p), or (q))	N/A	N/A	N/A			N/A	
TOTAL CLAIMS (37 CFR 1.16(i))	minus 20 =	*	X $ =		OR	X $ =	
INDEPENDENT CLAIMS (37 CFR 1.16(h))	minus 3 =	*	X $ =			X $ =	
☐ APPLICATION SIZE FEE (37 CFR 1.16(s))	If the specification and drawings exceed 100 sheets of paper, the application size fee due is $250 ($125 for small entity) for each additional 50 sheets or fraction thereof. See 35 U.S.C. 41(a)(1)(G) and 37 CFR 1.16(s).						
☐ MULTIPLE DEPENDENT CLAIM PRESENT (37 CFR 1.16(j))							
* If the difference in column 1 is less than zero, enter "0" in column 2.			TOTAL			TOTAL	

APPLICATION AS AMENDED – PART II

AMENDMENT 02/01/2011

	(Column 1) CLAIMS REMAINING AFTER AMENDMENT		(Column 2) HIGHEST NUMBER PREVIOUSLY PAID FOR	(Column 3) PRESENT EXTRA	SMALL ENTITY RATE ($)	SMALL ENTITY ADDITIONAL FEE ($)	OR	OTHER THAN SMALL ENTITY RATE ($)	OTHER THAN SMALL ENTITY ADDITIONAL FEE ($)
Total (37 CFR 1.16(i))	* 26	Minus	** 45	= 0	X $ =		OR	X $52=	0
Independent (37 CFR 1.16(h))	* 3	Minus	***3	= 0	X $ =		OR	X $220=	0
☐ Application Size Fee (37 CFR 1.16(s))									
☐ FIRST PRESENTATION OF MULTIPLE DEPENDENT CLAIM (37 CFR 1.16(j))							OR		
					TOTAL ADD'L FEE		OR	TOTAL ADD'L FEE	0

AMENDMENT

	(Column 1) CLAIMS REMAINING AFTER AMENDMENT		(Column 2) HIGHEST NUMBER PREVIOUSLY PAID FOR	(Column 3) PRESENT EXTRA	RATE ($)	ADDITIONAL FEE ($)		RATE ($)	ADDITIONAL FEE ($)
Total (37 CFR 1.16(i))	*	Minus	**	=	X $ =		OR	X $ =	
Independent (37 CFR 1.16(h))	*	Minus	***	=	X $ =		OR	X $ =	
☐ Application Size Fee (37 CFR 1.16(s))									
☐ FIRST PRESENTATION OF MULTIPLE DEPENDENT CLAIM (37 CFR 1.16(j))							OR		
					TOTAL ADD'L FEE		OR	TOTAL ADD'L FEE	

* If the entry in column 1 is less than the entry in column 2, write "0" in column 3.
** If the "Highest Number Previously Paid For" IN THIS SPACE is less than 20, enter "20".
*** If the "Highest Number Previously Paid For" IN THIS SPACE is less than 3, enter "3".
The "Highest Number Previously Paid For" (Total or Independent) is the highest number found in the appropriate box in column 1.

Legal Instrument Examiner:
/JAMES MASON/

This collection of information is required by 37 CFR 1.16. The information is required to obtain or retain a benefit by the public which is to file (and by the USPTO to process) an application. Confidentiality is governed by 35 U.S.C. 122 and 37 CFR 1.14. This collection is estimated to take 12 minutes to complete, including gathering, preparing, and submitting the completed application form to the USPTO. Time will vary depending upon the individual case. Any comments on the amount of time you require to complete this form and/or suggestions for reducing this burden, should be sent to the Chief Information Officer, U.S. Patent and Trademark Office, U.S. Department of Commerce, P.O. Box 1450, Alexandria, VA 22313-1450. DO NOT SEND FEES OR COMPLETED FORMS TO THIS ADDRESS. **SEND TO: Commissioner for Patents, P.O. Box 1450, Alexandria, VA 22313-1450.**
If you need assistance in completing the form, call 1-800-PTO-9199 and select option 2.

UNITED STATES PATENT AND TRADEMARK OFFICE

UNITED STATES DEPARTMENT OF COMMERCE
United States Patent and Trademark Office
Address: COMMISSIONER FOR PATENTS
P.O. Box 1450
Alexandria, Virginia 22313-1450
www.uspto.gov

APPLICATION NO.	FILING DATE	FIRST NAMED INVENTOR	ATTORNEY DOCKET NO.	CONFIRMATION NO.
11/241,748	09/29/2005	Anton Monk	E040004USU2	2829

77330 7590 02/22/2011
ENTROPIC COMMUNICATIONS, INC.
6290 SEQUENCE DRIVE
SAN DIEGO, CA 92121

EXAMINER
CHEN, CAI Y

ART UNIT	PAPER NUMBER
2425	

MAIL DATE	DELIVERY MODE
02/22/2011	PAPER

Please find below and/or attached an Office communication concerning this application or proceeding.

The time period for reply, if any, is set in the attached communication.

PTOL-90A (Rev. 04/07)

Office Action Summary	Application No.	Applicant(s)	
	11/241,748	MONK ET AL.	
	Examiner	Art Unit	
	CAI CHEN	2425	

-- The MAILING DATE of this communication appears on the cover sheet with the correspondence address --

Period for Reply

A SHORTENED STATUTORY PERIOD FOR REPLY IS SET TO EXPIRE 3 MONTH(S) OR THIRTY (30) DAYS, WHICHEVER IS LONGER, FROM THE MAILING DATE OF THIS COMMUNICATION.

- Extensions of time may be available under the provisions of 37 CFR 1.136(a). In no event, however, may a reply be timely filed after SIX (6) MONTHS from the mailing date of this communication.
- If NO period for reply is specified above, the maximum statutory period will apply and will expire SIX (6) MONTHS from the mailing date of this communication.
- Failure to reply within the set or extended period for reply will, by statute, cause the application to become ABANDONED (35 U.S.C. § 133). Any reply received by the Office later than three months after the mailing date of this communication, even if timely filed, may reduce any earned patent term adjustment. See 37 CFR 1.704(b).

Status

1)☒ Responsive to communication(s) filed on *01 February 2011*.

2a)☐ This action is **FINAL**. 2b)☒ This action is non-final.

3)☐ Since this application is in condition for allowance except for formal matters, prosecution as to the merits is closed in accordance with the practice under *Ex parte Quayle*, 1935 C.D. 11, 453 O.G. 213.

Disposition of Claims

4)☒ Claim(s) *1-7,9-25,46 and 47* is/are pending in the application.

4a) Of the above claim(s) _____ is/are withdrawn from consideration.

5)☐ Claim(s) _____ is/are allowed.

6)☒ Claim(s) *1-7, 9-25, and 46-47* is/are rejected.

7)☐ Claim(s) _____ is/are objected to.

8)☐ Claim(s) _____ are subject to restriction and/or election requirement.

Application Papers

9)☐ The specification is objected to by the Examiner.

10)☐ The drawing(s) filed on _____ is/are: a)☐ accepted or b)☐ objected to by the Examiner.

Applicant may not request that any objection to the drawing(s) be held in abeyance. See 37 CFR 1.85(a).

Replacement drawing sheet(s) including the correction is required if the drawing(s) is objected to. See 37 CFR 1.121(d).

11)☐ The oath or declaration is objected to by the Examiner. Note the attached Office Action or form PTO-152.

Priority under 35 U.S.C. § 119

12)☐ Acknowledgment is made of a claim for foreign priority under 35 U.S.C. § 119(a)-(d) or (f).

a)☐ All b)☐ Some * c)☐ None of:

1.☐ Certified copies of the priority documents have been received.

2.☐ Certified copies of the priority documents have been received in Application No. _____.

3.☐ Copies of the certified copies of the priority documents have been received in this National Stage application from the International Bureau (PCT Rule 17.2(a)).

* See the attached detailed Office action for a list of the certified copies not received.

Attachment(s)

1) ☒ Notice of References Cited (PTO-892)
2) ☐ Notice of Draftsperson's Patent Drawing Review (PTO-948)
3) ☐ Information Disclosure Statement(s) (PTO/SB/08) Paper No(s)/Mail Date _____.
4) ☐ Interview Summary (PTO-413) Paper No(s)/Mail Date. _____ .
5) ☐ Notice of Informal Patent Application
6) ☐ Other: _____.

DETAILED ACTION

Response to Arguments

Applicant's arguments with respect to claims 1-25 and 46-47 have been considered but are moot in view of the new ground(s) of rejection.

Claim Rejections - 35 USC § 103

1. The following is a quotation of 35 U.S.C. 103(a) which forms the basis for all obviousness rejections set forth in this Office action:

> (a) A patent may not be obtained though the invention is not identically disclosed or described as set forth in section 102 of this title, if the differences between the subject matter sought to be patented and the prior art are such that the subject matter as a whole would have been obvious at the time the invention was made to a person having ordinary skill in the art to which said subject matter pertains. Patentability shall not be negatived by the manner in which the invention was made.

2. Claim 1 is rejected under 35 U.S.C. 103(a) as being unpatentable over Bell (6,052,380) in view of Mao and further in view of Kwon (US 2004/0081191 A1).

Regarding claim 1, Bell discloses a modem for communication to at least one node across a at least one channel coaxial network (Fig. 1 and 2, el. 200), the modem comprising:

a transmitter (Fig. 2, col. 7, lines 55-60);

a MAC layer in signal communication with the transmitter (col. 7, lines 61-col. 8, lines 67, Ethernet physical layer signal communication in the network),

wherein the MAC layer utilizes at least one probe packet for modulation optimization (col. 8, lines 40-52, DMT modulation)

Wherein the transmitter communicates the at least one transmit packets (Fig. 2, col. 7, lines 55-60).

Bell does not explicitly wherein the MAC layer utilizes at least one probe packet for computing a network frequency response characterizing a first channel of the coaxial network and determining modulation optimization for the first channel based on the network frequency response,

Mao teaches wherein the MAC layer utilizes at least one probe packet for network frequency response (Fig. 4, el. 412, col. 10, lines 10-15, probe packets are unitized for network response)

It would be obvious to one of ordinary in the art at the time of invention to modify Bell to include wherein the MAC layer utilizes at least one probe packet for network frequency response, as taught by Mao, in order improve the network interface in the communication network.

Bell in view of Mao does not explicitly wherein the MAC layer utilizes at least one probe packet for computing a network frequency response characterizing a first channel of the coaxial network and determining modulation optimization for the first channel based on the network frequency response,

Kwon teaches wherein the MAC layer utilizes at least one probe packet (Fig. 7, "frame of forward line initialization) for computing a network frequency response characterizing a first channel (para. 67-68, para. 69-71, channel response is being calculated in frequency domain) of the coaxial network and determining modulation optimization (QPSK) for the first channel based on the network frequency response (para. 68-69, para. 98).

It would be obvious to one of ordinary in the art at the time of invention to modify Bell to include wherein the MAC layer utilizes at least one probe packet for computing a network frequency response characterizing a first channel of the coaxial network and determining modulation optimization for the first channel based on the network frequency response in order to obtain the available maximum transmission capacity.

3. Claims 2-5, 10, 11, 14, 16-25 are rejected under 35 U.S.C. 103(a) as being unpatentable over Bell (6,052,380) in view of Mao (7,302,700) and further in view of Kwon and further in view of Gurantz.

Regarding claim 2, Bell in view of Mao and further in view of Kwon discloses all limitation of claim 1,

Bell in view of Mao and further in view of Kwon does not explicitly discloses wherein the transmitter is a baseband transmitter,

Gurantz discloses wherein the transmitter is a baseband transmitter (Gurantz, para. 42, transmitting the baseband signal).

It would be obvious to one of ordinary in the art at the time of invention to modify Bell in view of Mao and further in view of Kwon to include wherein the transmitter is a baseband transmitter, as taught by Gurantz, in order to perform communication in baseband signal so the desirable signal can be decoded (para. 42).

Regarding claim 3, Bell in view of Mao and further in view of Kwon and further in view of Gurantz discloses wherein the transmitter is a Radio Frequency ("RF") transmitter (Gurantz, para. 42 and 49).

Regarding claim 4, Bell in view of Mao and further in view of Kwon and further in view of Gurantz wherein the packet communication utilizes services (MAO, col. 3, lines 48-65,).

Regarding claim 5, Bell in view of Mao and further in view of Kwon and further in view of Gurantz further discloses wherein the transmitter communicates with at least one node using Time Division Duplex ("TDD") (Gurantz, para. 38-39)

Regarding claim 10, Bell in view of Mao and further in view of Kwon discloses all limitation of claim 1,

Bell in view of Mao and further in view of Kwon does not explicitly discloses wherein the scrambling formatting includes Reed Solomon ("RS") encoding,

Gurantz discloses wherein the scrambling formatting includes Reed Solomon ("RS") encoding (Gurantz, para. 53).

It would be obvious to one of ordinary in the art at the time of invention to modify Bell in view of Mao and further in view of Kwon to include wherein the

scrambling formatting includes Reed Solomon ("RS") encoding, as taught by Gurantz, in order to format the data in accordance IEEE standard.

Regarding claim 11, Bell in view of Mao and further in view of Kwon and further in view of Gurantz further discloses disclose wherein the packet is padded to include an integral number of similar size and coding type RS codewords (Gurantz, para. 53).

Regarding claim 14, Bell in view of Mao and further in view of Kwon and further in view of Gurantz discloses wherein the transmitter utilizes orthogonal frequency division multiplexing ("OFDM") modulation (Gurantz para. 46-49, para. 52-55).

Regarding claim 16, Bell in view of Mao and further in view of Kwon and further in view of Gurantz discloses wherein the MAC layer utilizes orthogonal frequency division multiplexing ("OFDM") bit-loading (Gurantz para. 46-49, para. 52-55).

Regarding claim 17, Bell in view of Mao and further in view of Kwon and further in view of Gurantz discloses wherein the formatting utilizes scrambling (Gurantz para. 46-49, para. 52-55, OFDM frequency bins scrambling).

Regarding claim 18 Bell in view of Mao and further in view of Kwon and further in view of Gurantz discloses wherein the scrambling is byte scrambling (Gurantz para. 46-49, para. 52-55, OFDM frequency bins scrambling).

Regarding claim 19, Bell in view of Mao and further in view of Kwon and further in view of Gurantz discloses wherein the scrambling is OFDM bin scrambling (Gurantz para. 46-49, para. 52-55, OFDM frequency bins scrambling).

Regarding claim 20, Bell in view of Mao and further in view of Kwon and further in view of Gurantz discloses wherein the transmitter utilizes a modulation type

on each of its subcarriers chosen from the group consisting of: bipolar phase shift keying ("BPSK"); quadrature phase shift keying ("QPSK"); 8 quadrature amplitude modulation ("QAM"); 16 QAM; 32 QAM; 64 QAM; 128 QAM; and 256 QAM (Gurantz para. 49-50).

Regarding claim 21, Bell in view of Mao and further in view of Kwon and further in view of Gurantz discloses wherein the modulation type is obtained from a translation table that maps data to waveform data (Gurantz para. 47-49, IDFT generates the OFDM waveforms data).

Regarding claim 22, Bell in view of Mao and further in view of Kwon and further in view of Gurantz discloses wherein an amplitude factor is applied to the various modulation types (Gurantz para. 47-49).

Regarding claim 23, Bell in view of Mao and further in view of Kwon and further in view of Gurantz discloses wherein the transmitter is capable of producing and transmitting a probe signal to the at least one node (Gurantz para. 20, the modem has a transmitter capable of sending a probe signal during the communication with other within LAN).

Regarding claim 24, Bell in view of Mao and further in view of Kwon and further in view of Gurantz discloses wherein the transmitter wherein the transmitter is capable of producing a robust signal that includes redundant, repetitious subcarriers (Gurantz para. 20, para. 49-53, the modem has a transmitter capable of producing a probe signal during the communication with other within LAN by using the method of OFDM, and in the process the OFDM will create multiple subcarrier representing by 1 or 0, therefore subcarrier 1 or 0 will repeat during OFDM process).

Regarding claim 25, Bell in view of Mao and further in view of Kwon and further in view of Gurantz discloses wherein the transmitter transmits robust repetitious subcarriers according to a predetermined format (Gurantz para. 20, para. 49-53, the modem has a transmitter capable of producing a probe signal

during the communication with other within LAN by using the method of OFDM format, and in the process the OFDM will create multiple subcarrier representing by 1 or 0, therefore subcarrier 1 or 0 will repeat during OFDM process, finally, the transmitter transmits the OFDM signal to LAN).

4. Claim 6 is rejected under 35 U.S.C. 103(a) as being unpatentable over Bell (6,052,380) in view of Mao (7,302,700) and further in view of Kwon and further in view of Gurantz and further in view of Sambamurthy.

Regarding claim 6, Bell in view of Mao and further in view of Kwon and further in view of Gurantz discloses all limitation of claim 5,

Bell in view of Mao and further in view of Kwon and further in view of Gurantz does not discloses wherein the packet communication utilizes formatting that includes a preamble; and a packet of data

Sambamurthy teaches wherein the packet communication utilizes formatting that includes a preamble; and a packet of data (Sambamurthy, Fig. 1B, 5A, col. col. 5, lines 60-col. 6, line 12, col. 22, lines 5-53)

It would be obvious to one of ordinary in the art at the time of invention to modify Bell in view of Mao and further in view of Kwon and further in view of Gurantz to include teaches wherein the packet communication utilizes formatting that includes a preamble; and a packet of data, as taught by Sambamurthy, in order to pass the control information to correction destination in parallel with data processing (col. 25-35).

5. Claim 7 is rejected under 35 U.S.C. 103(a) as being unpatentable over Bell (6,052,380) in view of Mao (7,302,700) and further in view of Kwon and further in view of Gurantz and further in view of Orava (US 2002/0071477 A1).

Regarding claim 7, Bell in view of Mao and further in view of Kwon and further in view of Gurantz and discloses all limitation of claim 5.

Bell in view of Mao and further in view of Kwon and further in view of Gurantz does not explicitly disclose wherein the packet communication includes at least one robust packet.

Orava teaches wherein the packet communication includes at least one robust packet (Fig. 5A, para. 37, ID packets are the robust packet).

It would be obvious to one of ordinary in the art at the time of invention to modify Bell in view of Mao and further in view of Kwon and further in view of Gurantz to include wherein the packet communication includes at least one robust packet, as taught by Orava, in order to effectively transmitting data packet with reduced error by using robust packet (para. 37).

6. Claims 9 and 12 are rejected under 35 U.S.C. 103(a) as being unpatentable over Bell in view of Mao and further in view of Kwon and further in view of Gurantz and further in view of Sambamurthy and further in view of Kim (US 2004/0170157 A1).

Rearding claim 9, Bell in view of Mao and further in view of Kwon and further in view of Gurantz and further in view of Sambamurthy discloses all limitation of claim 6. Bell in view of Mao and further in view of Gurantz and further in view of Sambamurthy further discloses providing conditionally access to the data packets (para. 42).

Bell in view of Mao and further in view of Kwon and further in view of Gurantz and further in view of Sambamurthy does not explicitly disclose wherein the formatting includes packet encryption.

Kim teaches wherein the formatting includes packet encryption (para. 8, para. 12).

It would be obvious to one of ordinary in the art at the time of invention to modify Bell in view of Mao and further in view of Kwon and further in view of Gurantz and further in view of Sambamurthy to include wherein the formatting includes packet encryption, as taught by Kim, in order to protect the data packet from unauthorized usage.

Regarding claim 12, Bell in view of Mao and further in view of Kwon and further in view of Gurantz and further in view of Sambamurthy and further in view of Kim teaches wherein the formatting utilizes packet encryption (Kim, para. 8, para. 12).

7. Claim 13 is rejected under 35 U.S.C. 103(a) as being unpatentable over Bell in view of Mao and further in view of Kwon and further in view of Gurantz

and further in view of Sambamurthy and further in view of Kim and further in view of Kim (US 2004/0170157 A1) and further in view of Fortenberry (6,005,939).

Regarding claim 13, Bell in view of Mao and further in view of Kwon and further in view of Gurantz and further in view of Sambamurthy and further in view of Kim and further in view of Kim discloses all limitation of claim 12.

Bell in view of Mao and further in view of Kwon and further in view of Gurantz and further in view of Sambamurthy and further in view of Kim and further in view of Kim does not explicitly discloses [wherein the encryption utilizes] Date Encryption Standard ("DES").

Fortenberry teaches [wherein the encryption utilizes] Date Encryption Standard ("DES") (col. 9, lines 43-47).

It would be obvious to one of ordinary in the art at the time of invention to modify Bell in view of Mao and further in view of Kwon and further in view of Gurantz and further in view of Sambamurthy and further in view of Kim and further in view of Kim to include wherein the encryption utilizes] Date Encryption Standard ("DES"), as taught by Fortenberry, in order to standardize the encryption method by using the industry wide know Encryption method in DES (col. 9, lines 43-47).

8. Claims 15 is rejected under 35 U.S.C. 103(a) as being unpatentable over Bell in view of Mao and further in view of Kwon and further in view of Gurantz and further in view of Youge (6,522,650 B1).

Regarding claim 15, Bell in view of Mao and further in view of Kwon and further in view of Gurantz discloses all limitation of claim 14, and further discloses wherein the transmitter utilizes OFDM applications.

Bell in view of Mao and further in view of Kwon and further in view of Gurantz does not explicitly disclose [wherein the transmitter] utilizes padding [to utilize an integral number of OFDM symbols].

Youge teaches [wherein the transmitter] utilizes padding [to utilize an integral number of OFDM symbols] (Fig. 3, el. 114, col. 8, lines 22-39).

It would be obvious to one of ordinary in the art at the time of invention to modify Bell in view of Mao and further in view of Kwon and further in view of Gurantz to include [wherein the transmitter] utilizes padding [to utilize an integral number of OFDM symbols], as taught by Youge, in order to provide a separation between two data block and indicates the ending of one data block.

9. Claim 46 is rejected under 35 U.S.C. 103(a) as being unpatentable over Bell (6,052,380) in view of Chien (US 2004/0203472 A1).

Regarding claim 46, Bell discloses a modem for communication to at least one node across a at least one channel coaxial network (Fig. 1 and 2, el. 200), the modem comprising:

a transmitter (Fig. 2, col. 7, lines 55-60);

a MAC layer in signal communication with the transmitter (col. 7, lines 61-col. 8, lines 67, Ethernet physical layer signal communication in the network),

wherein the MAC layer utilizes at least one probe packet for modulation optimization (col. 8, lines 40-52, DMT modulation)

Wherein the transmitter communicates the at least one transmit packets (Fig. 2, col. 7, lines 55-60).

Bell does not explicitly discloses wherein the MAC layer utilizes at least one probe packet as an IQ imbalance and hardware/RF optimization probe whose purpose is to be able to reduce hardware complexity and compensate for certain hardware imperfections

Chien teaches wherein the MAC layer utilizes at least one probe packet as an IQ imbalance and hardware/RF optimization probe whose purpose is to be able to reduce hardware complexity and compensate for certain hardware imperfections (Abstract, para. 321-322, compensating factor is estimated to compensate the hardware imperfection and reducing the complexity).

It would be obvious to one of ordinary in the art at the time of invention to modify Bell to include wherein the MAC layer utilizes at least one probe packet as an IQ imbalance and hardware/RF optimization probe whose purpose is to be able to reduce hardware complexity and compensate for certain hardware imperfections, as taught by Chien, in order to compensate the deficiency in the hardware module (abstract).

10. Claim 47 is rejected under 35 U.S.C. 103(a) as being unpatentable over Bell (6,052,380) in view of Kim (US 2004/0218557) and further in view of Walton (US 2005/0120097).

Regarding claim 1, Bell discloses a modem for communication to at least one node across a at least one channel coaxial network (Fig. 1 and 2, el. 200), the modem comprising:

a transmitter (Fig. 2, col. 7, lines 55-60);

a MAC layer in signal communication with the transmitter (col. 7, lines 61-col. 8, lines 67, Ethernet physical layer signal communication in the network),

wherein the MAC layer utilizes at least one probe packet for modulation optimization (col. 8, lines, DMT modulation)

Wherein the transmitter communicates the at least one transmit packets (Fig. 2, col. 7, lines 55-60).

Bell does not explicitly wherein the MAC layer utilizes at least one probe packet as an echo profile probe whose purpose is to measure node delay spread on the network in order to optimize the preamble and cyclic prefix requirements or other parameters;

Kim teaches wherein the MAC layer utilizes at least one probe packet as an echo profile probe whose purpose is to measure node delay spread on the network (para. 8-11, node delay).

It would be obvious to one of ordinary in the art at the time of invention to modify Bell to include wherein the MAC layer utilizes at least one probe packet

whose purpose is to measure node delay spread on the network, as taught by Kim, in order to find the optimum route in the MAC layer routing protocol (para. 11).

Bell in view of Kim does not explicitly discloses MAC layer utilizes at least one probe packets in order to optimized the preamble and cyclic prefix requirements or other parameters,

Walton teaches discloses MAC layer (para. 43) utilizes at least one probe packets in order to optimized the preamble (Fig. 6A) and cyclic prefix requirements or other parameters (para. 49-50, optimum cyclic prefix requirement depends on the node delay spread)

It would be obvious to one of ordinary in the art at the time of invention to modify Bell to include MAC layer utilizes at least one probe packets in order to optimized the preamble and cyclic prefix requirements or other parameters in order for a system to improve the communication link between a transmitter and receiver.

Conclusion

Any inquiry concerning this communication or earlier communications from the examiner should be directed to CAI CHEN whose telephone number is (571)270-5679. The examiner can normally be reached on 7:30 am to 4:30 pm.

If attempts to reach the examiner by telephone are unsuccessful, the examiner's supervisor, Brian Pendleton can be reached on 571-272-7527. The fax phone number for the organization where this application or proceeding is assigned is 571-273-8300.

Information regarding the status of an application may be obtained from the Patent Application Information Retrieval (PAIR) system. Status information for published applications may be obtained from either Private PAIR or Public PAIR. Status information for unpublished applications is available through Private PAIR only. For more information about the PAIR system, see http://pair-direct.uspto.gov. Should you have questions on access to the Private PAIR system, contact the Electronic Business Center (EBC) at 866-217-9197 (toll-free). If you would like assistance from a USPTO Customer Service Representative or access to the automated information system, call 800-786-9199 (IN USA OR CANADA) or 571-272-1000.

/CAI CHEN/
Examiner, Art Unit 2425

/Brian T Pendleton/

Supervisory Patent Examiner, Art Unit 2425

Notice of References Cited	Application/Control No. 11/241,748	Applicant(s)/Patent Under Reexamination MONK ET AL.	
	Examiner CAI CHEN	Art Unit 2425	Page 1 of 1

U.S. PATENT DOCUMENTS

*		Document Number Country Code-Number-Kind Code	Date MM-YYYY	Name	Classification
*	A	US-2004/0081191	04-2004	Kwon et al.	370/431
*	B	US-2004/0203472	10-2004	Chien, Charles	455/068
*	C	US-2005/0120097	06-2005	Walton et al.	709/220
	D	US-			
	E	US-			
	F	US-			
	G	US-			
	H	US-			
	I	US-			
	J	US-			
	K	US-			
	L	US-			
	M	US-			

FOREIGN PATENT DOCUMENTS

*		Document Number Country Code-Number-Kind Code	Date MM-YYYY	Country	Name	Classification
	N					
	O					
	P					
	Q					
	R					
	S					
	T					

NON-PATENT DOCUMENTS

*		Include as applicable: Author, Title Date, Publisher, Edition or Volume, Pertinent Pages)
	U	
	V	
	W	
	X	

*A copy of this reference is not being furnished with this Office action. (See MPEP § 707.05(a).)
Dates in MM-YYYY format are publication dates. Classifications may be US or foreign.

Index of Claims	Application/Control No.	Applicant(s)/Patent Under Reexamination
	11241748	MONK ET AL.
	Examiner	**Art Unit**
	CAI CHEN	2425

✓	Rejected	-	Cancelled	N	Non-Elected	A	Appeal
=	Allowed	÷	Restricted	I	Interference	O	Objected

☐ Claims renumbered in the same order as presented by applicant ☐ CPA ☐ T.D. ☐ R.1.47

CLAIM		DATE								
Final	Original	03/20/2009	09/05/2009	03/17/2010	09/22/2010	02/15/2011				
	1	✓	✓	✓	✓	✓				
	2	✓	✓	✓	✓	✓				
	3	✓	✓	✓	✓	✓				
	4	✓	✓	✓	✓	✓				
	5	✓	✓	✓	✓	✓				
	6	✓	✓	✓	✓	✓				
	7	✓	✓	✓	✓	✓				
	8	✓	-	✓	✓	-				
	9	✓	✓	✓	✓	✓				
	10	✓	✓	✓	✓	✓				
	11	✓	✓	✓	✓	✓				
	12	✓	✓	✓	✓	✓				
	13	✓	✓	✓	✓	✓				
	14	✓	✓	✓	✓	✓				
	15	✓	✓	✓	✓	✓				
	16	✓	✓	✓	✓	✓				
	17	✓	✓	✓	✓	✓				
	18	✓	✓	✓	✓	✓				
	19	✓	✓	✓	✓	✓				
	20	✓	✓	✓	✓	✓				
	21	✓	✓	✓	✓	✓				
	22	✓	✓	✓	✓	✓				
	23	✓	✓	✓	✓	✓				
	24	✓	✓	✓	✓	✓				
	25	✓	✓	✓	✓	✓				
	26	✓	-	-	-	-				
	27	✓	-	-	-	-				
	28	✓	-	-	-	-				
	29	✓	-	-	-	-				
	30	✓	-	-	-	-				
	31	✓	-	-	-	-				
	32	✓	-	-	-	-				
	33	✓	-	-	-	-				
	34	✓	-	-	-	-				
	35	✓	-	-	-	-				
	36	✓	-	-	-	-				

Index of Claims	Application/Control No.	Applicant(s)/Patent Under Reexamination
	11241748	MONK ET AL.
	Examiner	**Art Unit**
	CAI CHEN	2425

✓	Rejected	-	Cancelled	N	Non-Elected	A	Appeal
=	Allowed	÷	Restricted	I	Interference	O	Objected

☐ Claims renumbered in the same order as presented by applicant ☐ CPA ☐ T.D. ☐ R.1.47

CLAIM		DATE								
Final	Original	03/20/2009	09/05/2009	03/17/2010	09/22/2010	02/15/2011				
	37	✓	-	-	-	-				
	38	✓	-	-	-	-				
	39	✓	-	-	-	-				
	40	✓	-	-	-	-				
	41	✓	-	-	-	-				
	42	✓	-	-	-	-				
	43	✓	-	-	-	-				
	44	✓	-	-	-	-				
	45	✓	-	-	-	-				
	46			✓	✓	✓				
	47			✓	✓	✓				

Search Notes	Application/Control No.	Applicant(s)/Patent Under Reexamination
	11241748	MONK ET AL.
	Examiner	**Art Unit**
	CAI CHEN	2425

SEARCHED

Class	Subclass	Date	Examiner

SEARCH NOTES

Search Notes	Date	Examiner
Inventor Searches were performed in East	3/20/2009	cc
Class 725 and 370 are text searches	3/20/2009	cc
The searches are updated	2/15/2011	cc
Consult with Primary Examiner Jerry Dennison in 709	2/15/2011	cc

INTERFERENCE SEARCH

Class	Subclass	Date	Examiner

/CAI CHEN/ Examiner.Art Unit 2425	

IN THE UNITED STATES PATENT AND TRADEMARK OFFICE

In Re Application of:
Anton Monk et al.

Serial No.: 11/241,748

Filed: 29-Sep-2005

For: Physical Layer Transmitter For Use In A Broadband Local Area Network

Group Art Unit: 2425

Confirmation No. 2829

RESPONSE TO NON-FINAL OFFICE ACTION

Mail Stop: Amendment
Commissioner for Patents
P.O. Box 1450
Alexandria, VA 22313-1450

Attention: CAI Y. CHEN
Examiner

Dear Sir:

Applicants submit the following in response to the Non-Final Office Action, mailed on February 22, 2011.

Amendments to the Claims begin on page 2 of this paper.

Remarks/Arguments begin on page 7 of this paper.

I hereby certify that this correspondence is being electronically deposited with the Commissioner for Patents through the USPTO electronic filing system, on:

May 23, 2011
(Date of Deposit)
Tim Ellis
(Name of Person Making Deposit)
/Tim Ellis/
(Signature)

AMENDMENTS TO THE CLAIMS

1. (Previously Amended) A modem for communication to at least one node across at least one channel of a coaxial network, the modem comprising:

a transmitter; and

a MAC layer in signal communication with the transmitter,

wherein the MAC layer utilizes at least one probe packet for computing a network frequency response characterizing a first channel of the coaxial network and determining modulation optimization for the first channel based on the network frequency response, and

wherein the transmitter communicates the at least one transmit packet.

2. (Original) The modem of claim 1, wherein the transmitter is a baseband transmitter.

3. (Original) The modem of claim 1, wherein the transmitter is a Radio Frequency ("RF") transmitter.

4. (Original) The modem of claim 1, wherein the packet communication utilizes services.

5. (Original) The modem of claim 1, wherein the transmitter communicates with at least one node utilizing packet communications using Time Division Duplex ("TDD").

6. (Original) The modem of claim 5, wherein the packet communication utilizes

formatting that includes

a preamble; and

a packet of data.

7. (Previously Amended) The modem of claim 6, wherein the packet communications includes at least one robust packet.

8. (Previously Canceled)

9. (Original) The modem of claim 6, wherein the formatting includes packet encryption.

10. (Original) The modem of claim 6, wherein the scrambling formatting includes Reed Solomon ("RS") encoding.

11. (Original) The modem of claim 10, wherein the packet is padded to include an integral number of similar size and coding type RS codewords.

12. (Original) The modem of claim 6, wherein the formatting utilizes packet encryption.

13. (Previously Amended) The modem of claim 12, wherein the encryption utilizes Date Encryption Standard ("DES").

14. (Original) The modem of claim 1, wherein the transmitter utilizes orthogonal frequency division multiplexing ("OFDM") modulation.

15. (Original) The modem of claim 14, wherein the transmitter utilizes padding to utilize an integral number of OFDM symbols.

16. (Previously Amended) The modem of claim 1, wherein the MAC layer utilizes orthogonal frequency division multiplexing ("OFDM") bit-loading.

17. (Original) The modem of claim 16, wherein the formatting utilizes scrambling.

18. (Original) The modem of claim 17, wherein the scrambling is byte scrambling.

19. (Original) The modem of claim 18, wherein the scrambling is OFDM bin scrambling.

20. (Original) The modem of claim 14 wherein the transmitter utilizes a modulation type on each of its subcarriers chosen from the group consisting of:

bipolar phase shift keying ("BPSK");

quadrature phase shift keying ("QPSK");

8 quadrature amplitude modulation ("QAM");

16 QAM;

32 QAM;

64 QAM;

128 QAM; and

256 QAM.

21. (Original) The modem of claim 20, wherein the modulation type is obtained from a translation table that maps data to waveform data.

22. (Original) The modem of claim 21, wherein an amplitude factor is applied to the various modulation types.

23. (Original) The modem of claim 1, wherein the transmitter is capable of producing and transmitting a probe signal to the at least one node.

24. (Original) The modem of claim 1, wherein the transmitter is capable of producing a robust signal that includes redundant, repetitious subcarriers.

25. (Original) The modem of claim 24, wherein the transmitter transmits robust repetitious subcarriers according to a predetermined format.

26-45. (Previously Canceled)

46. (Cancelled)

47. (Previously Added) A modem for communication to at least one node across at least one channel of a coaxial network, the modem comprising:

a transmitter; and

a MAC layer in signal communication with the transmitter,

wherein the MAC layer utilizes at least one probe packet as an echo profile probe whose purpose is to measure node delay spread on the network in order to optimize the preamble and cyclic prefix requirements or other parameters; and

wherein the transmitter communicates the at least one transmit packet.

REMARKS

Claims 1-7, 9-25 and 47 are currently pending.

Claims 1 and 47 are independent.

No claims have been amended.

Claim 46 is hereby cancelled.

Claims 8, 26-45 were previously canceled.

No new matter is introduced by these amendments and their entry is respectfully requested.

In view of the above amendments and following remarks, each of the presently pending claims in this application is believed to be in immediate condition for allowance. Accordingly, the Examiner is respectfully requested to reconsider and withdraw the outstanding rejections of the claims and to pass this application to issue.

If it is determined that a telephone conference would expedite the prosecution of this application, the Examiner is invited to telephone the undersigned at the number given below.

Rejections under 35 U.S.C. § 103

The Examiner rejected Claim 1 under 35 U.S.C. §103(a) for being unpatentable over Bell (US Patent No. 6,052,380) in view of Mao and further in view of Kwon (US 2004/0081191 A1).

Claim 1 is patentable over Bell, Mao and Kwon, whether considered alone or in combination, because Bell, Mao and Kwon fail to teach or suggest "wherein the MAC layer utilizes at least one probe packet for computing a network **frequency response characterizing a first channel** of the coaxial network and **determining modulation optimization** for the first channel **based on the network frequency response**," as recited in claim 1.

As noted in response to previous office actions, Bell discloses an improved network adapter and architecture which combines the Ethernet bus access protocol with a digital subscriber line-based (DSL-based) physical layer driver to provide low cost, compatibility advantages associated with Ethernet, improved reliability, improved robustness, improved

bandwidth, and noise resistance of the DSL layer. (*See*, Bell, Abstract.) As recognized in the previous Office Actions, Bell fails to teach or suggest a MAC layer that utilizes at least one probe packet for network frequency response purposes. Similarly, Bell fails to disclose utilizing at least one probe packet for computing a network frequency response that characterizes a channel of the coaxial network, or determining modulation optimization for a channel based on a network frequency response, as required by claim 1 as amended. In view of this, claim 1 is patentable over Bell.

Applicants once again contend that the prior art completely fails to show the limitation recited in claims, such as Claim 1, regarding "utilizes at least one probe packet **for computing a network frequency response** characterizing a first channel of the coaxial network and **determining modulation optimization for the first channel based on the network frequency response**."

That is, Kwon fails to cure this deficiency of Bell and Mao. The Examiner points to paragraphs 67-68 and 69-71 of Kwon, and particularly states that Kwon discloses that "channel response is being calculated in the frequency domain". This is an accurate statement, but does not address the question of whether Kwon teaches or discloses "computing a network frequency response characterizing a first channel" or "determining modulation optimization for the first channel based on the network frequency response". That is, Kwon discloses in paragraphs 67-68 (emphasis added):

> [0067] A channel on which a frame passes through is determined based on the **information of the starting and destination station**. Coefficients of FEQ obtained in the initialization process of the corresponding channels, and bit loading information **can be established**. FIG. 12 is a flowchart of a data encoding process **for detecting recognition tones** as described above. According to FIG. 12, frames are detected from a received signal (step 800), cyclic prefixes are removed from the detected frame (step 801), an FFT is performed to output the frame as symbols (step 802). If one of the outputted symbols is the first symbol (step 803), it is determined whether the receiving terminal is a destination station (step 813). If not, the step 800 is performed again. If the receiving terminal is a destination station, a starting station is recognized from symbol data (step 804), and **coefficients of FEQ and bit loading information are detected** (step 805 and step 806, respectively). If the symbol is not the first symbol in the step 803, **the output symbol is equalized with the coefficients of FEQ detected** in step 805 (step 815) and is decoded with the **bit loading information detected** in step 805 (step 816).

> [0068] The receiving terminal recognizes the transmitting terminal from the forward link initialization frame and stores the recognized transmitting terminal. Then, the receiving terminal estimates the channels and the noise spectrum of each subchannel by analyzing the channels, **calculates SNRs, calculates the maximal number of bits and gain distribution which can be loaded under the corresponding channel circumstances, and transmits the bit and gain information**, so as to obtain the available maximum transmission capacity.

There is no disclosure at all of computing a **frequency response** or of **determining modulation optimization for any channel based on network frequency response**, as indicated by the Examiner. It should be noted that "coefficients of FEQ and bit loading information **are detected**" and **not computed** from the received signals. Paragraphs 69-71 state:

> [0069] Channel analysis is performed by using the training sequence known to the transmitting terminal and the receiving terminal. The training sequence x_n uses QPSK symbols of X_k and is a periodic signal having a period of N. Here, the period N is set to be the same as or longer than the length of arbitrary channel response coefficients $P_{n'}$. The training sequence transmitted from the transmitting terminal passes through a channel and is received as expressed in the following Equation 11.
>
> $Yn \sim Xn * Pn + Un$ *(11)*
>
> [0070] where U_n indicates an additive noise having no correlation to X_n'
>
> [0071] Channel estimation obtains an estimation value of the channel response, P_n' **n (sic) order that an error signal between the received signal and the channel output of the training sequence can be minimized**. The error signal e_n is calculated according to Equation 12.
>
> $e_n \sim Yn - Pn * X_n$ (12)

As can be seen from close review of these paragraphs, there is nothing to do with probing the channel to compute the network **frequency response** and **determining modulation optimization** for the channel **based on this frequency response**. An error signal between the received signal and the channel output is calculated. This is further supported by the fact that Kwon states in paragraph 0074:

> [0074] The estimated value of the channel response which makes an MSE (Mean Square Error) of the error signal be minimized, has an error $\delta_n=P_n-P_n$ in the time domain which can be **expressed in the frequency domain** as, $\Delta_m=P_m-P(hat)_m$. If the estimated value *P(hat)* of the channel response is the same as an actual channel response P, the error of the estimated value δ is 0 and the error signal e_n according to the channel estimation is equal to U_n.

Accordingly, it can be seen from this that even though Kwon refers to the error being expressed in the frequency domain, this is completely different from the frequency response of the channel. Furthermore, other such references to the frequency domain are unrelated to the frequency response of the channel. Still further, none of these references make any mention of, or suggest, using a frequency response as a basis for optimizing the modulation. Since none of the references cited by the Examiner either teach or suggest the limitation of "the MAC layer utilizes at least one probe packet for **computing a network frequency response** and **determining modulation optimization** for the first channel **based on the network frequency response**", Applicants traverse the Examiner rejection of Claim 1.

In view of above, claim 1 is patentable over both Bell, Mao and Kwon whether considered alone or in combination and Applicants, therefore, respectfully request that the Examiner reconsider and withdraw the rejection of claim 1 under 35 U.S.C. §103(a).

Dependent Claims 2-7, and 9-25

Claims 2-5, 10, 11, 14, 16-25 are rejected under 35 U.S.C. §103(a) for allegedly being unpatentable over Bell in view of Mao, and further in view of Kwon and Gurantz.

Claim 6 is rejected under 35 U.S.C. §103(a) for allegedly being unpatentable over Bell in view of Mao, further in view of Robinson, Gurantz, and further in view of Sambamurthy (US Patent No. 6,085,248).

Claim 7 is rejected under 35 U.S.C. §103(a) for allegedly being unpatentable over Bell in view of Mao, further in view of Robinson, Gurantz, and further in view of Orava (US Patent Pub. No. 2002/0071477).

Claims 9 and 12 are rejected under 35 U.S.C. §103(a) for allegedly being unpatentable over Bell in view of Mao, Robinson, Gurantz, Sambamurthy, and further in view of Kim (US Patent Pub. No. 2004/0170157).

Claim 13 is rejected under 35 U.S.C. §103(a) for allegedly being unpatentable over Bell in view of Mao, further in view of Gurantz, Robinson, Sambamurthy, Kim, and further in view of Fortenberry (US Patent No. 6,005,939).

Claim 15 is rejected under 35 U.S.C. §103(a) for allegedly being unpatentable over Bell in view of Mao, Robinson, Gurantz, and further in view of Youge (US Patent No. 6,522,650).

Applicants respectfully traverse the Examiner's rejection of Claims 2-7 and 9-25, all of which depend from independent Claim1.

Claims 2-7, and 9-25 depend from claim 1 and, as such, are patentable over Bell, Mao, and Kwon, whether considered alone or in combination, for at least the same reasons provided above with respect to claim 1. In addition, none of the other references cited cures the deficiencies identified above with respect to Bell, Kwon and Mao. Accordingly, claims 2-7, and 9-25 are patentable over Bell, Mao, Kwon, Gurantz, Sambamurthy, Orava, Kim, Fortenberry, and Youge. Applicants, therefore, respectfully request that the Examiner reconsider and withdraw the rejection of claims 2-7, and 9-25 under 35 U.S.C. §103(a).

Independent Claim 46

The Examiner rejected Claim 46 under 35 U.S.C. §103(a) as being unpatentable over Bell in view of Chien (US Patent Pub. No. 2004/0203472).

Applicants have cancelled Claim 46. Accordingly, rejections of Claim 46 are now moot.

Independent Claim 47

The Examiner rejected Claim 47 under 35 U.S.C. §103(a) as being unpatentable over Bell in view of Kim, and further in view of Walton. Applicants respectfully traverse these rejections based on the following remarks.

Claim 47 is patentable over Bell, Kim and Walton. The Examiner contends that Walton discloses at least one probe packet used to optimize the preamble and cyclic prefix. It should be noted that Claim 47 recites using a probe to measure node delay spread on the network in order to optimize the preamble and cyclic prefix requirements or other parameters. Applicants see nothing at all in the beacon of Figure 6A in Walton or in paragraph 49-50 which would in any way lead one of ordinary skill in the art to use a probe to measure node delay spread in order to optimize the preamble and cyclic prefix requirements or other parameters. Applicants wonder whether the Examiner intended to point to paragraphs 39-40 which mention the relationship between cyclic prefix and delay spread. However, in these paragraphs, Walton merely states that different cyclic prefixes are to be used with channels that have different amounts of delay spread. There is no mention at all of a probe for measuring such delay spread. The Examiner points to the BCH PDU of Figure 6A as disclosing the use of a probe, but there is no mention anywhere in Walton of using the BCH PDU of Figure 6A to measure delay spread. The closest Walton comes to disclosing a use for the BCH PDU of Figure 6A for anything remotely related to cyclic prefix is the mention at paragraph 80 which states that:

> The OFDM symbol duration for all other transport channels (e.g., the FCCH, FCH, RACH, and RCH) is variable and depends on the selected cyclic prefix, which is specified by the Cyclic Prefix Duration field [of the BCH message].

Clearly, this is not at all what is recited in Claim 47 as a use of a probe to measure the delay spread in order to optimize the Cyclic Prefix.

Accordingly, for at least the foregoing reasons, claim 47 is patentable over Bell, Kim, and Walton. Applicants, therefore, respectfully request that the Examiner reconsider and withdraw the rejection of claim 47 under 35 U.S.C. §103(a).

CONCLUSION

In view of the above, each of the presently pending claims in this application is believed to be in immediate condition for allowance. Accordingly, the Examiner is respectfully requested to reconsider and withdraw the outstanding rejection of the claims and to pass this application to issue.

This is a response to the Non-Final Office Action mailed on February 22, 2011. As such, Applicants respectfully note presentation of this response is timely.

In the event the U.S. Patent and Trademark office determines that an extension of time to file this response and/or any other relief is required, Applicants petition for any required relief including extensions of time and authorizes the Commissioner to charge the cost of such petitions and/or other fees due in connection with the filing of this document to Deposit Account No. 50-4613 referencing the Attorney Docket No. noted above.

Respectfully submitted,

Dated: May 23, 2011

By: /Bruce W. Greenhaus/
Bruce W. Greenhaus
Attorney for Applicant
Registration No. 37,339

Entropic Communications, Inc.
6290 Sequence Drive
San Diego, California 92121
Telephone: (619) 980-2612
e-mail address: PatentTeam@Entropic.com

Electronic Acknowledgement Receipt

EFS ID:	10146734
Application Number:	11241748
International Application Number:	
Confirmation Number:	2829
Title of Invention:	Physical layer transmitter for use in a broadband local area network
First Named Inventor/Applicant Name:	Anton Monk
Customer Number:	77330
Filer:	Bruce Wayne Greenhaus/Tim Ellis
Filer Authorized By:	Bruce Wayne Greenhaus
Attorney Docket Number:	E040004USU2
Receipt Date:	23-MAY-2011
Filing Date:	29-SEP-2005
Time Stamp:	14:37:52
Application Type:	Utility under 35 USC 111(a)

Payment information:

Submitted with Payment	no

File Listing:

Document Number	Document Description	File Name	File Size(Bytes)/ Message Digest	Multi Part /.zip	Pages (if appl.)
1		E040004USU2_OA-Response_5-23-2011.pdf	179859 0dc7c1dde37c91391c7cf7ef629589aa7211f494	yes	13

	Multipart Description/PDF files in .zip description		
	Document Description	**Start**	**End**
	Amendment/Req. Reconsideration-After Non-Final Reject	1	1
	Claims	2	6
	Applicant Arguments/Remarks Made in an Amendment	7	12
	Amendment/Req. Reconsideration-After Non-Final Reject	13	13
Warnings:			
Information:			
	Total Files Size (in bytes):	179859	

This Acknowledgement Receipt evidences receipt on the noted date by the USPTO of the indicated documents, characterized by the applicant, and including page counts, where applicable. It serves as evidence of receipt similar to a Post Card, as described in MPEP 503.

<u>New Applications Under 35 U.S.C. 111</u>
If a new application is being filed and the application includes the necessary components for a filing date (see 37 CFR 1.53(b)-(d) and MPEP 506), a Filing Receipt (37 CFR 1.54) will be issued in due course and the date shown on this Acknowledgement Receipt will establish the filing date of the application.

<u>National Stage of an International Application under 35 U.S.C. 371</u>
If a timely submission to enter the national stage of an international application is compliant with the conditions of 35 U.S.C. 371 and other applicable requirements a Form PCT/DO/EO/903 indicating acceptance of the application as a national stage submission under 35 U.S.C. 371 will be issued in addition to the Filing Receipt, in due course.

<u>New International Application Filed with the USPTO as a Receiving Office</u>
If a new international application is being filed and the international application includes the necessary components for an international filing date (see PCT Article 11 and MPEP 1810), a Notification of the International Application Number and of the International Filing Date (Form PCT/RO/105) will be issued in due course, subject to prescriptions concerning national security, and the date shown on this Acknowledgement Receipt will establish the international filing date of the application.

PTO/SB/06 (07-06)
Approved for use through 1/31/2007. OMB 0651-0032
U.S. Patent and Trademark Office; U.S. DEPARTMENT OF COMMERCE
Under the Paperwork Reduction Act of 1995, no persons are required to respond to a collection of information unless it displays a valid OMB control number.

PATENT APPLICATION FEE DETERMINATION RECORD

Substitute for Form PTO-875

Application or Docket Number	Filing Date	☐ To be Mailed
11/241,748	09/29/2005	

APPLICATION AS FILED – PART I

FOR	(Column 1) NUMBER FILED	(Column 2) NUMBER EXTRA	SMALL ENTITY ☐ RATE ($)	SMALL ENTITY FEE ($)	OR	OTHER THAN SMALL ENTITY RATE ($)	OTHER THAN SMALL ENTITY FEE ($)
☐ BASIC FEE (37 CFR 1.16(a), (b), or (c))	N/A	N/A	N/A			N/A	
☐ SEARCH FEE (37 CFR 1.16(k), (i), or (m))	N/A	N/A	N/A			N/A	
☐ EXAMINATION FEE (37 CFR 1.16(o), (p), or (q))	N/A	N/A	N/A			N/A	
TOTAL CLAIMS (37 CFR 1.16(i))	minus 20 =	*	X $ =		OR	X $ =	
INDEPENDENT CLAIMS (37 CFR 1.16(h))	minus 3 =	*	X $ =			X $ =	
☐ APPLICATION SIZE FEE (37 CFR 1.16(s))	If the specification and drawings exceed 100 sheets of paper, the application size fee due is $250 ($125 for small entity) for each additional 50 sheets or fraction thereof. See 35 U.S.C. 41(a)(1)(G) and 37 CFR 1.16(s).						
☐ MULTIPLE DEPENDENT CLAIM PRESENT (37 CFR 1.16(j))							
* If the difference in column 1 is less than zero, enter "0" in column 2.			TOTAL			TOTAL	

APPLICATION AS AMENDED – PART II

AMENDMENT 05/23/2011

	(Column 1) CLAIMS REMAINING AFTER AMENDMENT		(Column 2) HIGHEST NUMBER PREVIOUSLY PAID FOR	(Column 3) PRESENT EXTRA	SMALL ENTITY RATE ($)	SMALL ENTITY ADDITIONAL FEE ($)	OR	OTHER THAN SMALL ENTITY RATE ($)	OTHER THAN SMALL ENTITY ADDITIONAL FEE ($)
Total (37 CFR 1.16(i))	* 25	Minus	** 45	= 0	X $ =		OR	X $52=	0
Independent (37 CFR 1.16(h))	* 2	Minus	***3	= 0	X $ =		OR	X $220=	0
☐ Application Size Fee (37 CFR 1.16(s))									
☐ FIRST PRESENTATION OF MULTIPLE DEPENDENT CLAIM (37 CFR 1.16(j))							OR		
					TOTAL ADD'L FEE		OR	TOTAL ADD'L FEE	0

AMENDMENT

	(Column 1) CLAIMS REMAINING AFTER AMENDMENT		(Column 2) HIGHEST NUMBER PREVIOUSLY PAID FOR	(Column 3) PRESENT EXTRA	RATE ($)	ADDITIONAL FEE ($)		RATE ($)	ADDITIONAL FEE ($)
Total (37 CFR 1.16(i))	*	Minus	**	=	X $ =		OR	X $ =	
Independent (37 CFR 1.16(h))	*	Minus	***	=	X $ =		OR	X $ =	
☐ Application Size Fee (37 CFR 1.16(s))									
☐ FIRST PRESENTATION OF MULTIPLE DEPENDENT CLAIM (37 CFR 1.16(j))							OR		
					TOTAL ADD'L FEE		OR	TOTAL ADD'L FEE	

* If the entry in column 1 is less than the entry in column 2, write "0" in column 3.
** If the "Highest Number Previously Paid For" IN THIS SPACE is less than 20, enter "20".
*** If the "Highest Number Previously Paid For" IN THIS SPACE is less than 3, enter "3".
The "Highest Number Previously Paid For" (Total or Independent) is the highest number found in the appropriate box in column 1.

Legal Instrument Examiner:
/FLORENCE PATTERSON/

This collection of information is required by 37 CFR 1.16. The information is required to obtain or retain a benefit by the public which is to file (and by the USPTO to process) an application. Confidentiality is governed by 35 U.S.C. 122 and 37 CFR 1.14. This collection is estimated to take 12 minutes to complete, including gathering, preparing, and submitting the completed application form to the USPTO. Time will vary depending upon the individual case. Any comments on the amount of time you require to complete this form and/or suggestions for reducing this burden, should be sent to the Chief Information Officer, U.S. Patent and Trademark Office, U.S. Department of Commerce, P.O. Box 1450, Alexandria, VA 22313-1450. DO NOT SEND FEES OR COMPLETED FORMS TO THIS ADDRESS. **SEND TO: Commissioner for Patents, P.O. Box 1450, Alexandria, VA 22313-1450.**
If you need assistance in completing the form, call 1-800-PTO-9199 and select option 2.

UNITED STATES PATENT AND TRADEMARK OFFICE

UNITED STATES DEPARTMENT OF COMMERCE
United States Patent and Trademark Office
Address: COMMISSIONER FOR PATENTS
P.O. Box 1450
Alexandria, Virginia 22313-1450
www.uspto.gov

APPLICATION NO.	FILING DATE	FIRST NAMED INVENTOR	ATTORNEY DOCKET NO.	CONFIRMATION NO.
11/241,748	09/29/2005	Anton Monk	E040004USU2	2829

77330 7590 08/01/2011
ENTROPIC COMMUNICATIONS, INC.
6290 SEQUENCE DRIVE
SAN DIEGO, CA 92121

EXAMINER
CHEN, CAI Y

ART UNIT	PAPER NUMBER
2425	

MAIL DATE	DELIVERY MODE
08/01/2011	PAPER

Please find below and/or attached an Office communication concerning this application or proceeding.

The time period for reply, if any, is set in the attached communication.

PTOL-90A (Rev. 04/07)

Office Action Summary	Application No.	Applicant(s)	
	11/241,748	MONK ET AL.	
	Examiner	Art Unit	
	CAI CHEN	2425	

-- The MAILING DATE of this communication appears on the cover sheet with the correspondence address --

Period for Reply

A SHORTENED STATUTORY PERIOD FOR REPLY IS SET TO EXPIRE 3 MONTH(S) OR THIRTY (30) DAYS, WHICHEVER IS LONGER, FROM THE MAILING DATE OF THIS COMMUNICATION.

- Extensions of time may be available under the provisions of 37 CFR 1.136(a). In no event, however, may a reply be timely filed after SIX (6) MONTHS from the mailing date of this communication.
- If NO period for reply is specified above, the maximum statutory period will apply and will expire SIX (6) MONTHS from the mailing date of this communication.
- Failure to reply within the set or extended period for reply will, by statute, cause the application to become ABANDONED (35 U.S.C. § 133). Any reply received by the Office later than three months after the mailing date of this communication, even if timely filed, may reduce any earned patent term adjustment. See 37 CFR 1.704(b).

Status

1)☒ Responsive to communication(s) filed on 23 May 2011.

2a)☒ This action is **FINAL**. 2b)☐ This action is non-final.

3)☐ Since this application is in condition for allowance except for formal matters, prosecution as to the merits is closed in accordance with the practice under *Ex parte Quayle*, 1935 C.D. 11, 453 O.G. 213.

Disposition of Claims

4)☒ Claim(s) 1-7,9-25 and 47 is/are pending in the application.

4a) Of the above claim(s) _____ is/are withdrawn from consideration.

5)☐ Claim(s) _____ is/are allowed.

6)☒ Claim(s) 1-7,9-25 and 47 is/are rejected.

7)☐ Claim(s) _____ is/are objected to.

8)☐ Claim(s) _____ are subject to restriction and/or election requirement.

Application Papers

9)☐ The specification is objected to by the Examiner.

10)☐ The drawing(s) filed on _____ is/are: a)☐ accepted or b)☐ objected to by the Examiner.

Applicant may not request that any objection to the drawing(s) be held in abeyance. See 37 CFR 1.85(a).

Replacement drawing sheet(s) including the correction is required if the drawing(s) is objected to. See 37 CFR 1.121(d).

11)☐ The oath or declaration is objected to by the Examiner. Note the attached Office Action or form PTO-152.

Priority under 35 U.S.C. § 119

12)☐ Acknowledgment is made of a claim for foreign priority under 35 U.S.C. § 119(a)-(d) or (f).

a)☐ All b)☐ Some * c)☐ None of:

1.☐ Certified copies of the priority documents have been received.

2.☐ Certified copies of the priority documents have been received in Application No. _____.

3.☐ Copies of the certified copies of the priority documents have been received in this National Stage application from the International Bureau (PCT Rule 17.2(a)).

* See the attached detailed Office action for a list of the certified copies not received.

Attachment(s)

1) ☒ Notice of References Cited (PTO-892)
2) ☐ Notice of Draftsperson's Patent Drawing Review (PTO-948)
3) ☐ Information Disclosure Statement(s) (PTO/SB/08) Paper No(s)/Mail Date _____.
4) ☐ Interview Summary (PTO-413) Paper No(s)/Mail Date. _____ .
5) ☐ Notice of Informal Patent Application
6) ☐ Other: _____.

DETAILED ACTION

Response to Arguments

Applicant's arguments filed 05/23/2011 have been fully considered but they are not persuasive.

Regarding claim 1, on page 1-11 of applicant' remarks, applicant argues that Kwon does not discloses "at least one probe packet for computing a network frequency response characterizing a first channel of the coaxial network and determining modulation optimization for the first channel based on the network frequency response;"

In response, the examiner respectfully disagrees. Kwon discloses that a data packet is sent from the transmitting terminal to the receiving terminal when the frame of forward line initialization is executed as illustrate in Fig. 7, and the channel frequency response (calculated the channel response (SNRs) in frequency domain by performing FFT) for a network channel between the transmitting terminal and receiving terminal is computed (para. 67-68), further Kwon discloses the Mean Square Error is minimized to obtain/determine the available maximum transmission capacity (para. 68) for QPSK modulation signal for a channel based on the channel response (para. 68-74).

Regarding claim 47, on page 12, applicant arguments regarding the rejections are fully considered and acknowledged.

In response, the examiner respectfully disagrees, the disputed claim limitation states “at least one probe packet as an echo profile probe whose purpose is to measure node delay spread on the network in order to optimize the

preamble and cyclic prefix requirements or other parameters;" the claim limitation "**whose purpose is to measure node delay spread on the network**" is intended use statement, therefore this limitation does not carry any patentable weight and not treated by the examiner. For the instant claim, the disputed claimed limitation is met by combination of Bell, Kim, and Walton. Kim discloses the concept of the MAC layer utilizes at least one data packet to determine data delay between the nodes of communication network. In addition, the examiner merely uses Walton reference to teach the concept of using a data packet to optimize cyclic prefix (by way of amending the cyclic prefix) to reduce the ISI distortion (para. 38-40).

Claim Rejections - 35 USC § 103

1. The following is a quotation of 35 U.S.C. 103(a) which forms the basis for all obviousness rejections set forth in this Office action:

> (a) A patent may not be obtained though the invention is not identically disclosed or described as set forth in section 102 of this title, if the differences between the subject matter sought to be patented and the prior art are such that the subject matter as a whole would have been obvious at the time the invention was made to a person having ordinary skill in the art to which said subject matter pertains. Patentability shall not be negatived by the manner in which the invention was made.

2. Claim 1 is rejected under 35 U.S.C. 103(a) as being unpatentable over Bell (6,052,380) in view of Mao and further in view of Kwon (US 2004/0081191 A1).

Regarding claim 1, Bell discloses a modem for communication to at least one node across a at least one channel coaxial network (Fig. 1 and 2, el. 200), the modem comprising:

a transmitter (Fig. 2, col. 7, lines 55-60);

a MAC layer in signal communication with the transmitter (col. 7, lines 61-col. 8, lines 67, Ethernet physical layer signal communication in the network),

wherein the MAC layer utilizes at least one probe packet for modulation optimization (col. 8, lines 40-52, DMT modulation)

Wherein the transmitter communicates the at least one transmit packets (Fig. 2, col. 7, lines 55-60).

Bell does not explicitly wherein the MAC layer utilizes at least one probe packet for computing a network frequency response characterizing a first channel of the coaxial network and determining modulation optimization for the first channel based on the network frequency response,

Mao teaches wherein the MAC layer utilizes at least one probe packet for network frequency response (Fig. 4, el. 412, col. 10, lines 10-15, probe packets are unitized for network response)

It would be obvious to one of ordinary in the art at the time of invention to modify Bell to include wherein the MAC layer utilizes at least one probe packet for network frequency response, as taught by Mao, in order improve the network interface in the communication network.

Bell in view of Mao does not explicitly utilizes at least one probe packet for computing a network frequency response characterizing a first channel of the

coaxial network and determining modulation optimization for the first channel based on the network frequency response,

Kwon teaches utilizes at least one probe packet (Fig. 7, "frame of forward line initialization" is executed which include the data packet being sent from transmitting terminal to receiving terminal) for computing a network frequency response characterizing a first channel (para. 67-68, para. 69-71, channel response is being calculated in frequency domain) of the coaxial network and determining modulation optimization (QPSK) for the first channel based on the network frequency response (para. 68-69, para. 98, para. 74).

It would be obvious to one of ordinary in the art at the time of invention to modify Bell to include wherein the MAC layer utilizes at least one probe packet for computing a network frequency response characterizing a first channel of the coaxial network and determining modulation optimization for the first channel based on the network frequency response in order to obtain the available maximum transmission capacity.

3. Claims 2-5, 10, 11, 14, 16-25 are rejected under 35 U.S.C. 103(a) as being unpatentable over Bell (6,052,380) in view of Mao (7,302,700) and further in view of Kwon and further in view of Gurantz.

Regarding claim 2, Bell in view of Mao and further in view of Kwon discloses all limitation of claim 1,

Bell in view of Mao and further in view of Kwon does not explicitly discloses wherein the transmitter is a baseband transmitter,

Gurantz discloses wherein the transmitter is a baseband transmitter (Gurantz, para. 42, transmitting the baseband signal).

It would be obvious to one of ordinary in the art at the time of invention to modify Bell in view of Mao and further in view of Kwon to include wherein the transmitter is a baseband transmitter, as taught by Gurantz, in order to perform communication in baseband signal so the desirable signal can be decoded (para. 42).

Regarding claim 3, Bell in view of Mao and further in view of Kwon and further in view of Gurantz discloses wherein the transmitter is a Radio Frequency ("RF") transmitter (Gurantz, para. 42 and 49).

Regarding claim 4, Bell in view of Mao and further in view of Kwon and further in view of Gurantz wherein the packet communication utilizes services (MAO, col. 3, lines 48-65,).

Regarding claim 5, Bell in view of Mao and further in view of Kwon and further in view of Gurantz further discloses wherein the transmitter communicates with at least one node using Time Division Duplex ("TDD") (Gurantz, para. 38-39)

Regarding claim 10, Bell in view of Mao and further in view of Kwon discloses all limitation of claim 1,

Bell in view of Mao and further in view of Kwon does not explicitly discloses wherein the scrambling formatting includes Reed Solomon ("RS") encoding,

Gurantz discloses wherein the scrambling formatting includes Reed Solomon ("RS") encoding (Gurantz, para. 53).

It would be obvious to one of ordinary in the art at the time of invention to modify Bell in view of Mao and further in view of Kwon to include wherein the scrambling formatting includes Reed Solomon ("RS") encoding, as taught by Gurantz, in order to format the data in accordance IEEE standard.

Regarding claim 11, Bell in view of Mao and further in view of Kwon and further in view of Gurantz further discloses disclose wherein the packet is padded to include an integral number of similar size and coding type RS codewords (Gurantz, para. 53).

Regarding claim 14, Bell in view of Mao and further in view of Kwon and further in view of Gurantz discloses wherein the transmitter utilizes orthogonal frequency division multiplexing ("OFDM") modulation (Gurantz para. 46-49, para. 52-55).

Regarding claim 16, Bell in view of Mao and further in view of Kwon and further in view of Gurantz discloses wherein the MAC layer utilizes orthogonal frequency division multiplexing ("OFDM") bit-loading (Gurantz para. 46-49, para. 52-55).

Regarding claim 17, Bell in view of Mao and further in view of Kwon and further in view of Gurantz discloses wherein the formatting utilizes scrambling (Gurantz para. 46-49, para. 52-55, OFDM frequency bins scrambling).

Regarding claim 18 Bell in view of Mao and further in view of Kwon and further in view of Gurantz discloses wherein the scrambling is byte scrambling (Gurantz para. 46-49, para. 52-55, OFDM frequency bins scrambling).

Regarding claim 19, Bell in view of Mao and further in view of Kwon and further in view of Gurantz discloses wherein the scrambling is OFDM bin scrambling (Gurantz para. 46-49, para. 52-55, OFDM frequency bins scrambling).

Regarding claim 20, Bell in view of Mao and further in view of Kwon and further in view of Gurantz discloses wherein the transmitter utilizes a modulation type

on each of its subcarriers chosen from the group consisting of: bipolar phase shift keying ("BPSK"); quadrature phase shift keying ("QPSK"); 8

quadrature amplitude modulation ("QAM"); 16 QAM; 32 QAM; 64 QAM; 128 QAM; and 256 QAM (Gurantz para. 49-50).

Regarding claim 21, Bell in view of Mao and further in view of Kwon and further in view of Gurantz discloses wherein the modulation type is obtained from a translation table that maps data to waveform data (Gurantz para. 47-49, IDFT generates the OFDM waveforms data).

Regarding claim 22, Bell in view of Mao and further in view of Kwon and further in view of Gurantz discloses wherein an amplitude factor is applied to the various modulation types (Gurantz para. 47-49).

Regarding claim 23, Bell in view of Mao and further in view of Kwon and further in view of Gurantz discloses wherein the transmitter is capable of producing and transmitting a probe signal to the at least one node (Gurantz para. 20, the modem has a transmitter capable of sending a probe signal during the communication with other within LAN).

Regarding claim 24, Bell in view of Mao and further in view of Kwon and further in view of Gurantz discloses wherein the transmitter wherein the transmitter is capable of producing a robust signal that includes redundant, repetitious subcarriers (Gurantz para. 20, para. 49-53, the modem has a transmitter capable of producing a probe signal during the communication with

other within LAN by using the method of OFDM, and in the process the OFDM will create multiple subcarrier representing by 1 or 0, therefore subcarrier 1 or 0 will repeat during OFDM process).

Regarding claim 25, Bell in view of Mao and further in view of Kwon and further in view of Gurantz discloses wherein the transmitter transmits robust repetitious subcarriers according to a predetermined format (Gurantz para. 20, para. 49-53, the modem has a transmitter capable of producing a probe signal during the communication with other within LAN by using the method of OFDM format, and in the process the OFDM will create multiple subcarrier representing by 1 or 0, therefore subcarrier 1 or 0 will repeat during OFDM process, finally, the transmitter transmits the OFDM signal to LAN).

4. Claim 6 is rejected under 35 U.S.C. 103(a) as being unpatentable over Bell (6,052,380) in view of Mao (7,302,700) and further in view of Kwon and further in view of Gurantz and further in view of Sambamurthy.

Regarding claim 6, Bell in view of Mao and further in view of Kwon and further in view of Gurantz discloses all limitation of claim 5,

Bell in view of Mao and further in view of Kwon and further in view of Gurantz does not discloses wherein the packet communication utilizes formatting that includes a preamble; and a packet of data

Sambamurthy teaches wherein the packet communication utilizes formatting that includes a preamble; and a packet of data (Sambamurthy, Fig. 1B, 5A, col. col. 5, lines 60-col. 6, line 12, col. 22, lines 5-53)

It would be obvious to one of ordinary in the art at the time of invention to modify Bell in view of Mao and further in view of Kwon and further in view of Gurantz to include teaches wherein the packet communication utilizes formatting that includes a preamble; and a packet of data, as taught by Sambamurthy, in order to pass the control information to correction destination in parallel with data processing (col. 25-35).

5. Claim 7 is rejected under 35 U.S.C. 103(a) as being unpatentable over Bell (6,052,380) in view of Mao (7,302,700) and further in view of Kwon and further in view of Gurantz and further in view of Orava (US 2002/0071477 A1).

Regarding claim 7, Bell in view of Mao and further in view of Kwon and further in view of Gurantz and discloses all limitation of claim 5.

Bell in view of Mao and further in view of Kwon and further in view of Gurantz does not explicitly disclose wherein the packet communication includes at least one robust packet.

Orava teaches wherein the packet communication includes at least one robust packet (Fig. 5A, para. 37, ID packets are the robust packet).

It would be obvious to one of ordinary in the art at the time of invention to modify Bell in view of Mao and further in view of Kwon and further in view of

Gurantz to include wherein the packet communication includes at least one robust packet, as taught by Orava, in order to effectively transmitting data packet with reduced error by using robust packet (para. 37).

6. Claims 9 and 12 are rejected under 35 U.S.C. 103(a) as being unpatentable over Bell in view of Mao and further in view of Kwon and further in view of Gurantz and further in view of Sambamurthy and further in view of Kim (US 2004/0170157 A1).

Rearding claim 9, Bell in view of Mao and further in view of Kwon and further in view of Gurantz and further in view of Sambamurthy discloses all limitation of claim 6. Bell in view of Mao and further in view of Gurantz and further in view of Sambamurthy further discloses providing conditionally access to the data packets (para. 42).

Bell in view of Mao and further in view of Kwon and further in view of Gurantz and further in view of Sambamurthy does not explicitly disclose wherein the formatting includes packet encryption.

Kim teaches wherein the formatting includes packet encryption (para. 8, para. 12).

It would be obvious to one of ordinary in the art at the time of invention to modify Bell in view of Mao and further in view of Kwon and further in view of Gurantz and further in view of Sambamurthy to include wherein the formatting

includes packet encryption, as taught by Kim, in order to protect the data packet from unauthorized usage.

Regarding claim 12, Bell in view of Mao and further in view of Kwon and further in view of Gurantz and further in view of Sambamurthy and further in view of Kim teaches wherein the formatting utilizes packet encryption (Kim, para. 8, para. 12).

7. Claim 13 is rejected under 35 U.S.C. 103(a) as being unpatentable over Bell in view of Mao and further in view of Kwon and further in view of Gurantz and further in view of Sambamurthy and further in view of Kim and further in view of Kim (US 2004/0170157 A1) and further in view of Fortenberry (6,005,939).

Regarding claim 13, Bell in view of Mao and further in view of Kwon and further in view of Gurantz and further in view of Sambamurthy and further in view of Kim and further in view of Kim discloses all limitation of claim 12.

Bell in view of Mao and further in view of Kwon and further in view of Gurantz and further in view of Sambamurthy and further in view of Kim and further in view of Kim does not explicitly discloses [wherein the encryption utilizes] Date Encryption Standard ("DES").

Fortenberry teaches [wherein the encryption utilizes] Date Encryption Standard ("DES") (col. 9, lines 43-47).

It would be obvious to one of ordinary in the art at the time of invention to modify Bell in view of Mao and further in view of Kwon and further in view of Gurantz and further in view of Sambamurthy and further in view of Kim and further in view of Kim to include wherein the encryption utilizes] Date Encryption Standard ("DES"), as taught by Fortenberry, in order to standardize the encryption method by using the industry wide know Encryption method in DES (col. 9, lines 43-47).

8. Claims 15 is rejected under 35 U.S.C. 103(a) as being unpatentable over Bell in view of Mao and further in view of Kwon and further in view of Gurantz and further in view of Youge (6,522,650 B1).

Regarding claim 15, Bell in view of Mao and further in view of Kwon and further in view of Gurantz discloses all limitation of claim 14, and further discloses wherein the transmitter utilizes OFDM applications.

Bell in view of Mao and further in view of Kwon and further in view of Gurantz does not explicitly disclose [wherein the transmitter] utilizes padding [to utilize an integral number of OFDM symbols].

Youge teaches [wherein the transmitter] utilizes padding [to utilize an integral number of OFDM symbols] (Fig. 3, el. 114, col. 8, lines 22-39).

It would be obvious to one of ordinary in the art at the time of invention to modify Bell in view of Mao and further in view of Kwon and further in view of Gurantz to include [wherein the transmitter] utilizes padding [to utilize an integral

number of OFDM symbols], as taught by Youge, in order to provide a separation between two data block and indicates the ending of one data block.

9. Claim 46 is rejected under 35 U.S.C. 103(a) as being unpatentable over Bell (6,052,380) in view of Chien (US 2004/0203472 A1).

Regarding claim 46, Bell discloses a modem for communication to at least one node across a at least one channel coaxial network (Fig. 1 and 2, el. 200), the modem comprising:

a transmitter (Fig. 2, col. 7, lines 55-60);

a MAC layer in signal communication with the transmitter (col. 7, lines 61-col. 8, lines 67, Ethernet physical layer signal communication in the network),

wherein the MAC layer utilizes at least one probe packet for modulation optimization (col. 8, lines 40-52, DMT modulation)

Wherein the transmitter communicates the at least one transmit packets (Fig. 2, col. 7, lines 55-60).

Bell does not explicitly discloses wherein the MAC layer utilizes at least one probe packet as an IQ imbalance and hardware/RF optimization probe whose purpose is to be able to reduce hardware complexity and compensate for certain hardware imperfections

Chien teaches wherein the MAC layer utilizes at least one probe packet as an IQ imbalance and hardware/RF optimization probe whose purpose is to be able to reduce hardware complexity and compensate for certain hardware

imperfections (Abstract, para. 321-322, compensating factor is estimated to compensate the hardware imperfection and reducing the complexity).

It would be obvious to one of ordinary in the art at the time of invention to modify Bell to include wherein the MAC layer utilizes at least one probe packet as an IQ imbalance and hardware/RF optimization probe whose purpose is to be able to reduce hardware complexity and compensate for certain hardware imperfections, as taught by Chien, in order to compensate the deficiency in the hardware module (abstract).

10. Claim 47 is rejected under 35 U.S.C. 103(a) as being unpatentable over Bell (6,052,380) in view of Kim (US 2004/0218557) and further in view of Walton (US 2005/0120097).

Regarding claim 1, Bell discloses a modem for communication to at least one node across a at least one channel coaxial network (Fig. 1 and 2, el. 200), the modem comprising:

a transmitter (Fig. 2, col. 7, lines 55-60);

a MAC layer in signal communication with the transmitter (col. 7, lines 61-col. 8, lines 67, Ethernet physical layer signal communication in the network),

wherein the MAC layer utilizes at least one probe packet for modulation optimization (col. 8, lines, DMT modulation)

Wherein the transmitter communicates the at least one transmit packets (Fig. 2, col. 7, lines 55-60).

Bell does not explicitly wherein the MAC layer utilizes at least one probe packet as an echo profile probe whose purpose is to measure node delay spread on the network in order to optimize the preamble and cyclic prefix requirements or other parameters;

Kim teaches wherein the MAC layer utilizes at least one probe packet as an echo profile probe “whose purpose is to measure node delay spread (intended user do not carry any patentable weight) on the network” (para. 8-11, the concept of the MAC layer utilizes at least one data packet to determine data delay between the nodes of communication network).

It would be obvious to one of ordinary in the art at the time of invention to modify Bell to include Kim in order to find the optimum route in the MAC layer routing protocol (para. 11).

Bell in view of Kim does not explicitly discloses MAC layer utilizes at least one probe packets in order to optimized the preamble and cyclic prefix requirements or other parameters,

Walton teaches discloses MAC layer (para. 43) utilizes at least one probe packets in order to optimized the preamble (Fig. 6A) and cyclic prefix requirements or other parameters (para. 38-40, optimum cyclic prefix is determined to reduce the ISI distortion)

It would be obvious to one of ordinary in the art at the time of invention to modify Bell to include MAC layer utilizes at least one probe packets in order to optimized the preamble and cyclic prefix requirements or other parameters in

order for a system to improve the communication link between a transmitter and receiver.

Conclusion

Any inquiry concerning this communication or earlier communications from the examiner should be directed to CAI CHEN whose telephone number is (571)270-5679. The examiner can normally be reached on 7:30 am to 4:30 pm.

If attempts to reach the examiner by telephone are unsuccessful, the examiner's supervisor, Brian Pendleton can be reached on 571-272-7527. The fax phone number for the organization where this application or proceeding is assigned is 571-273-8300.

Information regarding the status of an application may be obtained from the Patent Application Information Retrieval (PAIR) system. Status information for published applications may be obtained from either Private PAIR or Public PAIR. Status information for unpublished applications is available through Private PAIR only. For more information about the PAIR system, see http://pair-direct.uspto.gov. Should you have questions on access to the Private PAIR system, contact the Electronic Business Center (EBC) at 866-217-9197 (toll-free). If you would like assistance from a USPTO Customer Service Representative or access to the automated information system, call 800-786-9199 (IN USA OR CANADA) or 571-272-1000.

/CAI CHEN/
Examiner, Art Unit 2425

/Brian T Pendleton/
Supervisory Patent Examiner, Art Unit 2425

Notice of References Cited	Application/Control No. 11/241,748	Applicant(s)/Patent Under Reexamination MONK ET AL.	
	Examiner CAI CHEN	Art Unit 2425	Page 1 of 1

U.S. PATENT DOCUMENTS

*		Document Number Country Code-Number-Kind Code	Date MM-YYYY	Name	Classification
*	A	US-2005/0120097	06-2005	Walton et al.	709/220
	B	US-			
	C	US-			
	D	US-			
	E	US-			
	F	US-			
	G	US-			
	H	US-			
	I	US-			
	J	US-			
	K	US-			
	L	US-			
	M	US-			

FOREIGN PATENT DOCUMENTS

*		Document Number Country Code-Number-Kind Code	Date MM-YYYY	Country	Name	Classification
	N					
	O					
	P					
	Q					
	R					
	S					
	T					

NON-PATENT DOCUMENTS

*		Include as applicable: Author, Title Date, Publisher, Edition or Volume, Pertinent Pages)
	U	
	V	
	W	
	X	

*A copy of this reference is not being furnished with this Office action. (See MPEP § 707.05(a).)
Dates in MM-YYYY format are publication dates. Classifications may be US or foreign.

Index of Claims	Application/Control No.	Applicant(s)/Patent Under Reexamination
	11241748	MONK ET AL.
	Examiner	**Art Unit**
	CAI CHEN	2425

✓	Rejected	-	Cancelled	N	Non-Elected	A	Appeal
=	Allowed	÷	Restricted	I	Interference	O	Objected

☐ Claims renumbered in the same order as presented by applicant ☐ CPA ☐ T.D. ☐ R.1.47

CLAIM		DATE								
Final	Original	03/20/2009	09/05/2009	03/17/2010	09/22/2010	02/15/2011	07/19/2011			
	1	✓	✓	✓	✓	✓	✓			
	2	✓	✓	✓	✓	✓	✓			
	3	✓	✓	✓	✓	✓	✓			
	4	✓	✓	✓	✓	✓	✓			
	5	✓	✓	✓	✓	✓	✓			
	6	✓	✓	✓	✓	✓	✓			
	7	✓	✓	✓	✓	✓	✓			
	8	✓	-	✓	✓	-	✓			
	9	✓	✓	✓	✓	✓	✓			
	10	✓	✓	✓	✓	✓	✓			
	11	✓	✓	✓	✓	✓	✓			
	12	✓	✓	✓	✓	✓	✓			
	13	✓	✓	✓	✓	✓	✓			
	14	✓	✓	✓	✓	✓	✓			
	15	✓	✓	✓	✓	✓	✓			
	16	✓	✓	✓	✓	✓	✓			
	17	✓	✓	✓	✓	✓	✓			
	18	✓	✓	✓	✓	✓	✓			
	19	✓	✓	✓	✓	✓	✓			
	20	✓	✓	✓	✓	✓	✓			
	21	✓	✓	✓	✓	✓	✓			
	22	✓	✓	✓	✓	✓	✓			
	23	✓	✓	✓	✓	✓	✓			
	24	✓	✓	✓	✓	✓	✓			
	25	✓	✓	✓	✓	✓	✓			
	26	✓	-	-	-	-	-			
	27	✓	-	-	-	-	-			
	28	✓	-	-	-	-	-			
	29	✓	-	-	-	-	-			
	30	✓	-	-	-	-	-			
	31	✓	-	-	-	-	-			
	32	✓	-	-	-	-	-			
	33	✓	-	-	-	-	-			
	34	✓	-	-	-	-	-			
	35	✓	-	-	-	-	-			
	36	✓	-	-	-	-	-			

Index of Claims	Application/Control No.	Applicant(s)/Patent Under Reexamination
	11241748	MONK ET AL.
	Examiner	**Art Unit**
	CAI CHEN	2425

✓	Rejected	-	Cancelled	N	Non-Elected	A	Appeal
=	Allowed	÷	Restricted	I	Interference	O	Objected

☐ Claims renumbered in the same order as presented by applicant ☐ CPA ☐ T.D. ☐ R.1.47

CLAIM		DATE								
Final	Original	03/20/2009	09/05/2009	03/17/2010	09/22/2010	02/15/2011	07/19/2011			
	37	✓	-	-	-	-	-			
	38	✓	-	-	-	-	-			
	39	✓	-	-	-	-	-			
	40	✓	-	-	-	-	-			
	41	✓	-	-	-	-	-			
	42	✓	-	-	-	-	-			
	43	✓	-	-	-	-	-			
	44	✓	-	-	-	-	-			
	45	✓	-	-	-	-	-			
	46			✓	✓	✓	-			
	47			✓	✓	✓	✓			

Search Notes	Application/Control No.	Applicant(s)/Patent Under Reexamination
	11241748	MONK ET AL.
	Examiner	**Art Unit**
	CAI CHEN	2425

SEARCHED

Class	Subclass	Date	Examiner

SEARCH NOTES

Search Notes	Date	Examiner
Inventor Searches were performed in East	3/20/2009	cc
Class 725 and 370 are text searches	3/20/2009	cc
The searches are updated	2/15/2011	cc
Consult with Primary Examiner Jerry Dennison in 709	2/15/2011	cc
All searches are updated	7/19/2011	cc

INTERFERENCE SEARCH

Class	Subclass	Date	Examiner

PTO/SB/30EFS (07-09)
Approved for use through 07/31/2012. OMB 0651-0031
U.S. Patent and Trademark Office; U.S. DEPARTMENT OF COMMERCE
Under the Paperwork Reduction Act of 1995, no persons are required to respond to a collection of information unless it contains a valid OMB control number.

REQUEST FOR CONTINUED EXAMINATION(RCE)TRANSMITTAL
(Submitted Only via EFS-Web)

Application Number	11/241,748	Filing Date	2005-09-29	Docket Number (if applicable)	E040004USU2	Art Unit	2425
First Named Inventor	Anton Monk			Examiner Name	Cai Y. Chen		

This is a Request for Continued Examination (RCE) under 37 CFR 1.114 of the above-identified application.
Request for Continued Examination (RCE) practice under 37 CFR 1.114 does not apply to any utility or plant application filed prior to June 8, 1995, or to any design application. The Instruction Sheet for this form is located at WWW.USPTO.GOV

SUBMISSION REQUIRED UNDER 37 CFR 1.114

Note: If the RCE is proper, any previously filed unentered amendments and amendments enclosed with the RCE will be entered in the order in which they were filed unless applicant instructs otherwise. If applicant does not wish to have any previously filed unentered amendment(s) entered, applicant must request non-entry of such amendment(s).

☐ Previously submitted. If a final Office action is outstanding, any amendments filed after the final Office action may be considered as a submission even if this box is not checked.

- ☐ Consider the arguments in the Appeal Brief or Reply Brief previously filed on _____
- ☐ Other _____

☒ Enclosed

- ☒ Amendment/Reply
- ☐ Information Disclosure Statement (IDS)
- ☐ Affidavit(s)/ Declaration(s)
- ☐ Other _____

MISCELLANEOUS

☐ Suspension of action on the above-identified application is requested under 37 CFR 1.103(c) for a period of months _____
(Period of suspension shall not exceed 3 months; Fee under 37 CFR 1.17(i) required)

☐ Other _____

FEES

The RCE fee under 37 CFR 1.17(e) is required by 37 CFR 1.114 when the RCE is filed.
☒ The Director is hereby authorized to charge any underpayment of fees, or credit any overpayments, to Deposit Account No 504613

SIGNATURE OF APPLICANT, ATTORNEY, OR AGENT REQUIRED

☒ Patent Practitioner Signature
☐ Applicant Signature

PTO/SB/30EFS (07-09)
Approved for use through 07/31/2012. OMB 0651-0031
U.S. Patent and Trademark Office; U.S. DEPARTMENT OF COMMERCE
Under the Paperwork Reduction Act of 1995, no persons are required to respond to a collection of information unless it contains a valid OMB control number.

Signature of Registered U.S. Patent Practitioner			
Signature	/Bruce W. Greenhaus/	Date (YYYY-MM-DD)	2011-10-28
Name	Bruce W. Greenhaus	Registration Number	37339

This collection of information is required by 37 CFR 1.114. The information is required to obtain or retain a benefit by the public which is to file (and by the USPTO to process) an application. Confidentiality is governed by 35 U.S.C. 122 and 37 CFR 1.11 and 1.14. This collection is estimated to take 12 minutes to complete, including gathering, preparing, and submitting the completed application form to the USPTO. Time will vary depending upon the individual case. Any comments on the amount of time you require to complete this form and/or suggestions for reducing this burden, should be sent to the Chief Information Officer, U.S. Patent and Trademark Office, U.S. Department of Commerce, P.O. Box 1450, Alexandria, VA 22313-1450.

If you need assistance in completing the form, call 1-800-PTO-9199 and select option 2.

Privacy Act Statement

The Privacy Act of 1974 (P.L. 93-579) requires that you be given certain information in connection with your submission of the attached form related to a patent application or patent. Accordingly, pursuant to the requirements of the Act, please be advised that: (1) the general authority for the collection of this information is 35 U.S.C. 2(b)(2); (2) furnishing of the information solicited is voluntary; and (3) the principal purpose for which the information is used by the U.S. Patent and Trademark Office is to process and/or examine your submission related to a patent application or patent. If you do not furnish the requested information, the U.S. Patent and Trademark Office may not be able to process and/or examine your submission, which may result in termination of proceedings or abandonment of the application or expiration of the patent.

The information provided by you in this form will be subject to the following routine uses:

1. The information on this form will be treated confidentially to the extent allowed under the Freedom of Information Act (5 U.S.C. 552) and the Privacy Act (5 U.S.C. 552a). Records from this system of records may be disclosed to the Department of Justice to determine whether the Freedom of Information Act requires disclosure of these records.

2. A record from this system of records may be disclosed, as a routine use, in the course of presenting evidence to a court, magistrate, or administrative tribunal, including disclosures to opposing counsel in the course of settlement negotiations.

3. A record in this system of records may be disclosed, as a routine use, to a Member of Congress submitting a request involving an individual, to whom the record pertains, when the individual has requested assistance from the Member with respect to the subject matter of the record.

4. A record in this system of records may be disclosed, as a routine use, to a contractor of the Agency having need for the information in order to perform a contract. Recipients of information shall be required to comply with the requirements of the Privacy Act of 1974, as amended, pursuant to 5 U.S.C. 552a(m).

5. A record related to an International Application filed under the Patent Cooperation Treaty in this system of records may be disclosed, as a routine use, to the International Bureau of the World Intellectual Property Organization, pursuant to the Patent Cooperation Treaty.

6. A record in this system of records may be disclosed, as a routine use, to another federal agency for purposes of National Security review (35 U.S.C. 181) and for review pursuant to the Atomic Energy Act (42 U.S.C. 218(c)).

7. A record from this system of records may be disclosed, as a routine use, to the Administrator, General Services, or his/her designee, during an inspection of records conducted by GSA as part of that agency's responsibility to recommend improvements in records management practices and programs, under authority of 44 U.S.C. 2904 and 2906. Such disclosure shall be made in accordance with the GSA regulations governing inspection of records for this purpose, and any other relevant (i.e., GSA or Commerce) directive. Such disclosure shall not be used to make determinations about individuals.

8. A record from this system of records may be disclosed, as a routine use, to the public after either publication of the application pursuant to 35 U.S.C. 122(b) or issuance of a patent pursuant to 35 U.S.C. 151. Further, a record may be disclosed, subject to the limitations of 37 CFR 1.14, as a routine use, to the public if the record was filed in an application which became abandoned or in which the proceedings were terminated and which application is referenced by either a published application, an application open to public inspections or an issued patent.

9. A record from this system of records may be disclosed, as a routine use, to a Federal, State, or local law enforcement agency, if the USPTO becomes aware of a violation or potential violation of law or regulation.

IN THE UNITED STATES PATENT AND TRADEMARK OFFICE

In Re Application of:
Anton Monk et al.

Serial No.: 11/241,748

Filed: 29-Sep-2005

For: Physical Layer Transmitter For Use In A Broadband Local Area Network

Group Art Unit: 2425

Confirmation No. 2829

RESPONSE TO FINAL OFFICE ACTION

Mail Stop: Amendment
Commissioner for Patents
P.O. Box 1450
Alexandria, VA 22313-1450

Attention: CAI Y. CHEN
Examiner

Dear Sir:

Applicants submit the following in response to the Final Office Action, mailed on August 1, 2011.

Amendments to the Claims begin on page 2 of this paper.

Remarks/Arguments begin on page 3 of this paper.

I hereby certify that this correspondence is being electronically deposited with the Commissioner for Patents through the USPTO electronic filing system, on:

October 28, 2011
(Date of Deposit)
Tim Ellis
(Name of Person Making Deposit)
/Tim Ellis/
(Signature)

AMENDMENTS TO THE CLAIMS

1-46. (Cancelled)

47. (Currently Amended) A modem for communication to at least one node across at least one channel of a coaxial network, the modem comprising:

a transmitter; and

a MAC layer in signal communication with the transmitter,

~~wherein~~ the MAC layer ~~utilizes~~ using at least one probe packet as an echo profile probe ~~whose purpose is~~ to measure node delay spread on the network and the MAC layer optimizing ~~in order to optimize~~ the preamble and cyclic prefix requirements or other parameters in response to the measured node delay spread on the network; ~~and~~

wherein the transmitter communicates the at least one transmit packet.

REMARKS

Claim 47 is currently pending.

Claims 47 has been amended.

Claim 1-7 and 9-25 are hereby cancelled.

Claims 8, 26-46 were previously canceled.

No new matter is introduced by these amendments and their entry is respectfully requested.

In view of the above amendments and following remarks, each of the presently pending claims in this application is believed to be in immediate condition for allowance. Accordingly, the Examiner is respectfully requested to reconsider and withdraw the outstanding rejections of the claims and to pass this application to issue.

If it is determined that a telephone conference would expedite the prosecution of this application, the Examiner is invited to telephone the undersigned at the number given below.

Rejections under 35 U.S.C. § 103

Claim 47

The Examiner rejected Claim 47 under 35 U.S.C. §103(a) as being unpatentable over Bell in view of Kim, and further in view of Walton. Applicants respectfully traverse these rejections based on the amendments made herein and the following remarks.

Applications respectfully contend that Claim 47 is patentable over Bell, Kim and Walton. The Examiner stated at page 2, fifth paragraph of the Office Action mailed on August 1, 2011 that the "disputed claim limitation…is [an] intended use statement, therefore does not carry any patentable weight and [therefore has] not [been] treated by the Examiner." Applicants have amended Claim 47 to recite the "disputed claim limitation" as an affirmative limitation of the MAC layer. As such, Applications respectfully contend that none of the references teach or suggest the limitation of a MAC layer

> using at least one probe packet as an echo profile probe to measure node delay spread on the network and the MAC layer optimizing the preamble and cyclic prefix requirements or other parameters in response to the measured node delay spread on the network….

Accordingly, for at least the foregoing reasons, claim 47 is patentable over Bell, Kim, and Walton. Applicants, therefore, respectfully request that the Examiner reconsider and withdraw the rejection of claim 47 under 35 U.S.C. §103(a).

CONCLUSION

In view of the above, the presently pending claim in this application is believed to be in immediate condition for allowance. Accordingly, the Examiner is respectfully requested to reconsider and withdraw the outstanding rejection of the claim and to pass this application to issue.

This is a response to the Final Office Action mailed on August 1, 2011. As such, Applicants respectfully note presentation of this response is timely. This response is filed concurrent with a request for continuing examination; therefore, Applications respectfully request that this response be entered.

In the event the U.S. Patent and Trademark office determines that an extension of time to file this response and/or any other relief is required, Applicants petition for any required relief including extensions of time and authorizes the Commissioner to charge the cost of such petitions and/or other fees due in connection with the filing of this document to Deposit Account No. 50-4613 referencing the Attorney Docket No. noted above.

Respectfully submitted,

Dated: October 28, 2011

By: /Bruce W. Greenhaus/
Bruce W. Greenhaus
Attorney for Applicant
Registration No. 37,339

Entropic Communications, Inc.
6290 Sequence Drive
San Diego, California 92121
Telephone: (619) 980-2612
e-mail address: PatentTeam@Entropic.com

Electronic Patent Application Fee Transmittal

Application Number:	11241748
Filing Date:	29-Sep-2005
Title of Invention:	Physical layer transmitter for use in a broadband local area network
First Named Inventor/Applicant Name:	Anton Monk
Filer:	Bruce Wayne Greenhaus/Tim Ellis
Attorney Docket Number:	E040004USU2

Filed as Large Entity

Utility under 35 USC 111(a) Filing Fees

Description	Fee Code	Quantity	Amount	Sub-Total in USD($)
Basic Filing:				
Pages:				
Claims:				
Miscellaneous-Filing:				
Petition:				
Patent-Appeals-and-Interference:				
Post-Allowance-and-Post-Issuance:				
Extension-of-Time:				

Description	Fee Code	Quantity	Amount	Sub-Total in USD($)
Miscellaneous:				
Request for continued examination	1801	1	930	930
		Total in USD ($)		**930**

Electronic Acknowledgement Receipt	
EFS ID:	11294434
Application Number:	11241748
International Application Number:	
Confirmation Number:	2829
Title of Invention:	Physical layer transmitter for use in a broadband local area network
First Named Inventor/Applicant Name:	Anton Monk
Customer Number:	77330
Filer:	Bruce Wayne Greenhaus/Tim Ellis
Filer Authorized By:	Bruce Wayne Greenhaus
Attorney Docket Number:	E040004USU2
Receipt Date:	28-OCT-2011
Filing Date:	29-SEP-2005
Time Stamp:	18:37:01
Application Type:	Utility under 35 USC 111(a)

Payment information:

Submitted with Payment	yes
Payment Type	Deposit Account
Payment was successfully received in RAM	$930
RAM confirmation Number	5371
Deposit Account	504613
Authorized User	
The Director of the USPTO is hereby authorized to charge indicated fees and credit any overpayment as follows: Charge any Additional Fees required under 37 C.F.R. Section 1.16 (National application filing, search, and examination fees) Charge any Additional Fees required under 37 C.F.R. Section 1.17 (Patent application and reexamination processing fees)	

Charge any Additional Fees required under 37 C.F.R. Section 1.19 (Document supply fees)

Charge any Additional Fees required under 37 C.F.R. Section 1.21 (Miscellaneous fees and charges)

File Listing:

Document Number	Document Description	File Name	File Size(Bytes)/ Message Digest	Multi Part /.zip	Pages (if appl.)
1	Request for Continued Examination (RCE)	E040004USU2_RCE-Form_10-28-2011.pdf	922416 730dde462f01795d404a903b858f429283e0ba4f	no	3
Warnings:					
Information:					
2		E040004USU2_RCE-Amendment_10-28-2011.pdf	90597 828281d4d69a17b4b81b30aa8f812deede3850d7	yes	5

Multipart Description/PDF files in .zip description

Document Description	Start	End
Amendment After Final	1	1
Claims	2	2
Applicant Arguments/Remarks Made in an Amendment	3	4
Amendment After Final	5	5

Warnings:					
Information:					
3	Fee Worksheet (SB06)	fee-info.pdf	30389 bed6e7ef5d0c8d6a8731d7a886b5f37928f2769f	no	2
Warnings:					
Information:					
		Total Files Size (in bytes):	1043402		

This Acknowledgement Receipt evidences receipt on the noted date by the USPTO of the indicated documents, characterized by the applicant, and including page counts, where applicable. It serves as evidence of receipt similar to a Post Card, as described in MPEP 503.

New Applications Under 35 U.S.C. 111
If a new application is being filed and the application includes the necessary components for a filing date (see 37 CFR 1.53(b)-(d) and MPEP 506), a Filing Receipt (37 CFR 1.54) will be issued in due course and the date shown on this Acknowledgement Receipt will establish the filing date of the application.

National Stage of an International Application under 35 U.S.C. 371
If a timely submission to enter the national stage of an international application is compliant with the conditions of 35 U.S.C. 371 and other applicable requirements a Form PCT/DO/EO/903 indicating acceptance of the application as a national stage submission under 35 U.S.C. 371 will be issued in addition to the Filing Receipt, in due course.

New International Application Filed with the USPTO as a Receiving Office
If a new international application is being filed and the international application includes the necessary components for an international filing date (see PCT Article 11 and MPEP 1810), a Notification of the International Application Number and of the International Filing Date (Form PCT/RO/105) will be issued in due course, subject to prescriptions concerning national security, and the date shown on this Acknowledgement Receipt will establish the international filing date of the application.

PTO/SB/06 (07-06)
Approved for use through 1/31/2007. OMB 0651-0032
U.S. Patent and Trademark Office; U.S. DEPARTMENT OF COMMERCE
Under the Paperwork Reduction Act of 1995, no persons are required to respond to a collection of information unless it displays a valid OMB control number.

PATENT APPLICATION FEE DETERMINATION RECORD Substitute for Form PTO-875	Application or Docket Number 11/241,748	Filing Date 09/29/2005	☐ To be Mailed

APPLICATION AS FILED – PART I

FOR	(Column 1) NUMBER FILED	(Column 2) NUMBER EXTRA	SMALL ENTITY ☐ RATE ($)	SMALL ENTITY FEE ($)	OR	OTHER THAN SMALL ENTITY RATE ($)	OTHER THAN SMALL ENTITY FEE ($)
☐ BASIC FEE (37 CFR 1.16(a), (b), or (c))	N/A	N/A	N/A			N/A	
☐ SEARCH FEE (37 CFR 1.16(k), (i), or (m))	N/A	N/A	N/A			N/A	
☐ EXAMINATION FEE (37 CFR 1.16(o), (p), or (q))	N/A	N/A	N/A			N/A	
TOTAL CLAIMS (37 CFR 1.16(i))	minus 20 =	*	X $ =		OR	X $ =	
INDEPENDENT CLAIMS (37 CFR 1.16(h))	minus 3 =	*	X $ =			X $ =	
☐ APPLICATION SIZE FEE (37 CFR 1.16(s))	If the specification and drawings exceed 100 sheets of paper, the application size fee due is $250 ($125 for small entity) for each additional 50 sheets or fraction thereof. See 35 U.S.C. 41(a)(1)(G) and 37 CFR 1.16(s).						
☐ MULTIPLE DEPENDENT CLAIM PRESENT (37 CFR 1.16(j))							
* If the difference in column 1 is less than zero, enter "0" in column 2.			TOTAL			TOTAL	

APPLICATION AS AMENDED – PART II

AMENDMENT 10/28/2011	(Column 1) CLAIMS REMAINING AFTER AMENDMENT		(Column 2) HIGHEST NUMBER PREVIOUSLY PAID FOR	(Column 3) PRESENT EXTRA	SMALL ENTITY RATE ($)	SMALL ENTITY ADDITIONAL FEE ($)	OR	OTHER THAN SMALL ENTITY RATE ($)	OTHER THAN SMALL ENTITY ADDITIONAL FEE ($)
Total (37 CFR 1.16(i))	* 1	Minus	** 45	= 0	X $ =		OR	X $60=	0
Independent (37 CFR 1.16(h))	* 1	Minus	***3	= 0	X $ =		OR	X $250=	0
☐ Application Size Fee (37 CFR 1.16(s))									
☐ FIRST PRESENTATION OF MULTIPLE DEPENDENT CLAIM (37 CFR 1.16(j))							OR		
					TOTAL ADD'L FEE		OR	TOTAL ADD'L FEE	**0**

AMENDMENT	(Column 1) CLAIMS REMAINING AFTER AMENDMENT		(Column 2) HIGHEST NUMBER PREVIOUSLY PAID FOR	(Column 3) PRESENT EXTRA	RATE ($)	ADDITIONAL FEE ($)		RATE ($)	ADDITIONAL FEE ($)
Total (37 CFR 1.16(i))	*	Minus	**	=	X $ =		OR	X $ =	
Independent (37 CFR 1.16(h))	*	Minus	***	=	X $ =		OR	X $ =	
☐ Application Size Fee (37 CFR 1.16(s))									
☐ FIRST PRESENTATION OF MULTIPLE DEPENDENT CLAIM (37 CFR 1.16(j))							OR		
					TOTAL ADD'L FEE		OR	TOTAL ADD'L FEE	

* If the entry in column 1 is less than the entry in column 2, write "0" in column 3.
** If the "Highest Number Previously Paid For" IN THIS SPACE is less than 20, enter "20".
*** If the "Highest Number Previously Paid For" IN THIS SPACE is less than 3, enter "3".
The "Highest Number Previously Paid For" (Total or Independent) is the highest number found in the appropriate box in column 1.

Legal Instrument Examiner:
/VIKKI GRAY/

This collection of information is required by 37 CFR 1.16. The information is required to obtain or retain a benefit by the public which is to file (and by the USPTO to process) an application. Confidentiality is governed by 35 U.S.C. 122 and 37 CFR 1.14. This collection is estimated to take 12 minutes to complete, including gathering, preparing, and submitting the completed application form to the USPTO. Time will vary depending upon the individual case. Any comments on the amount of time you require to complete this form and/or suggestions for reducing this burden, should be sent to the Chief Information Officer, U.S. Patent and Trademark Office, U.S. Department of Commerce, P.O. Box 1450, Alexandria, VA 22313-1450. DO NOT SEND FEES OR COMPLETED FORMS TO THIS ADDRESS. **SEND TO: Commissioner for Patents, P.O. Box 1450, Alexandria, VA 22313-1450.**
If you need assistance in completing the form, call 1-800-PTO-9199 and select option 2.

UNITED STATES PATENT AND TRADEMARK OFFICE

UNITED STATES DEPARTMENT OF COMMERCE
United States Patent and Trademark Office
Address: COMMISSIONER FOR PATENTS
P.O. Box 1450
Alexandria, Virginia 22313-1450
www.uspto.gov

APPLICATION NO.	FILING DATE	FIRST NAMED INVENTOR	ATTORNEY DOCKET NO.	CONFIRMATION NO.
11/241,748	09/29/2005	Anton Monk	E040004USU2	2829

77330 7590 04/18/2012
ENTROPIC COMMUNICATIONS, INC.
6290 SEQUENCE DRIVE
SAN DIEGO, CA 92121

EXAMINER
CHEN, CAI Y

ART UNIT	PAPER NUMBER
2425	

MAIL DATE	DELIVERY MODE
04/18/2012	PAPER

Please find below and/or attached an Office communication concerning this application or proceeding.

The time period for reply, if any, is set in the attached communication.

PTOL-90A (Rev. 04/07)

Office Action Summary	Application No.	Applicant(s)	
	11/241,748	MONK ET AL.	
	Examiner	Art Unit	
	CAI CHEN	2425	

-- The MAILING DATE of this communication appears on the cover sheet with the correspondence address --

Period for Reply

A SHORTENED STATUTORY PERIOD FOR REPLY IS SET TO EXPIRE 3 MONTH(S) OR THIRTY (30) DAYS, WHICHEVER IS LONGER, FROM THE MAILING DATE OF THIS COMMUNICATION.

- Extensions of time may be available under the provisions of 37 CFR 1.136(a). In no event, however, may a reply be timely filed after SIX (6) MONTHS from the mailing date of this communication.
- If NO period for reply is specified above, the maximum statutory period will apply and will expire SIX (6) MONTHS from the mailing date of this communication.
- Failure to reply within the set or extended period for reply will, by statute, cause the application to become ABANDONED (35 U.S.C. § 133). Any reply received by the Office later than three months after the mailing date of this communication, even if timely filed, may reduce any earned patent term adjustment. See 37 CFR 1.704(b).

Status

1)☒ Responsive to communication(s) filed on *10/28/2011*.

2a)☐ This action is **FINAL**. 2b)☒ This action is non-final.

3)☐ An election was made by the applicant in response to a restriction requirement set forth during the interview on _____; the restriction requirement and election have been incorporated into this action.

4)☐ Since this application is in condition for allowance except for formal matters, prosecution as to the merits is closed in accordance with the practice under *Ex parte Quayle*, 1935 C.D. 11, 453 O.G. 213.

Disposition of Claims

5)☒ Claim(s) *47* is/are pending in the application.

5a) Of the above claim(s) _____ is/are withdrawn from consideration.

6)☐ Claim(s) _____ is/are allowed.

7)☒ Claim(s) *47* is/are rejected.

8)☐ Claim(s) _____ is/are objected to.

9)☐ Claim(s) _____ are subject to restriction and/or election requirement.

Application Papers

10)☐ The specification is objected to by the Examiner.

11)☐ The drawing(s) filed on _____ is/are: a)☐ accepted or b)☐ objected to by the Examiner.

Applicant may not request that any objection to the drawing(s) be held in abeyance. See 37 CFR 1.85(a).

Replacement drawing sheet(s) including the correction is required if the drawing(s) is objected to. See 37 CFR 1.121(d).

12)☐ The oath or declaration is objected to by the Examiner. Note the attached Office Action or form PTO-152.

Priority under 35 U.S.C. § 119

13)☐ Acknowledgment is made of a claim for foreign priority under 35 U.S.C. § 119(a)-(d) or (f).

a)☐ All b)☐ Some * c)☐ None of:

1.☐ Certified copies of the priority documents have been received.

2.☐ Certified copies of the priority documents have been received in Application No. _____.

3.☐ Copies of the certified copies of the priority documents have been received in this National Stage application from the International Bureau (PCT Rule 17.2(a)).

* See the attached detailed Office action for a list of the certified copies not received.

Attachment(s)

1) ☒ Notice of References Cited (PTO-892)

2) ☐ Notice of Draftsperson's Patent Drawing Review (PTO-948)

3) ☐ Information Disclosure Statement(s) (PTO/SB/08) Paper No(s)/Mail Date _____.

4) ☐ Interview Summary (PTO-413) Paper No(s)/Mail Date. _____ .

5) ☐ Notice of Informal Patent Application

6) ☐ Other: _____.

DETAILED ACTION

Response to Arguments

Applicant's arguments with respect to claim 47 have been considered but are moot because the arguments do not apply to any of the references being used in the current rejection.

Claim Rejections - 35 USC § 103

1. The following is a quotation of 35 U.S.C. 103(a) which forms the basis for all obviousness rejections set forth in this Office action:

> (a) A patent may not be obtained though the invention is not identically disclosed or described as set forth in section 102 of this title, if the differences between the subject matter sought to be patented and the prior art are such that the subject matter as a whole would have been obvious at the time the invention was made to a person having ordinary skill in the art to which said subject matter pertains. Patentability shall not be negatived by the manner in which the invention was made.

2. Claim 47 is rejected under 35 U.S.C. 103(a) as being unpatentable over Bell (6,052,380) in view of Draves JR et al. (US 2005/0185632 A1, hereinafter refers as Draves JR) and further in view of Walton (US 2005/0120097).

Regarding claim 1, Bell discloses a modem for communication to at least one node across an at least one channel coaxial network (Fig. 1 and 2, el. 200), the modem comprising:

a transmitter (Fig. 2, col. 7, lines 55-60);

a MAC layer in signal communication with the transmitter (col. 8, lines 5-35, Fig. 2, el. 222, DSP Physical layer driver),

wherein the MAC layer utilizes at least one probe packet for modulation optimization (col. 8, lines, DMT modulation)

Wherein the transmitter communicates the at least one transmit packets (Fig. 2, col. 7, lines 55-60).

Bell does not explicitly the MAC layer utilizes at least one probe packet as an echo profile probe is to measure node delay spread on the network and the MAC layer optimizing the preamble and cyclic prefix requirements or other parameters in response to the measured node delay spread on the network;

Draves JR teaches the MAC layer utilizes at least one probe packet as an echo profile probe is to measure node delay spread on the network (para. 70-71, the probe packets are used to measure the delay between two nodes).

It would be obvious to one of ordinary in the art at the time of invention to modify Bell to include Draves JR in order to find the shortest path between two nodes (para. 75).

Bell in view of Draves JR does not explicitly discloses MAC layer utilizes at least one probe packets in order to optimized the preamble and cyclic prefix requirements or other parameters,

Walton teaches the MAC layer (para. 43) optimizing the preamble (Fig. 6A) and cyclic prefix requirements or other parameters in response to the measured node delay spread on the network (para. 38-40, optimum cyclic prefix is determined to reduce the ISI distortion depend on the measured delay of the channel network);

It would be obvious to one of ordinary in the art at the time of invention to modify Bell in view of Draves Jr to include Walton in order for a system to improve the communication link between a transmitter and receiver.

Conclusion

Any inquiry concerning this communication or earlier communications from the examiner should be directed to CAI CHEN whose telephone number is (571)270-5679. The examiner can normally be reached on 7:30 am to 4:30 pm.

If attempts to reach the examiner by telephone are unsuccessful, the examiner's supervisor, Brian Pendleton can be reached on 571-272-7527. The fax phone number for the organization where this application or proceeding is assigned is 571-273-8300.

Information regarding the status of an application may be obtained from the Patent Application Information Retrieval (PAIR) system. Status information for published applications may be obtained from either Private PAIR or Public PAIR. Status information for unpublished applications is available through Private PAIR only. For more information about the PAIR system, see http://pair-direct.uspto.gov. Should you have questions on access to the Private PAIR system, contact the Electronic Business Center (EBC) at 866-217-9197 (toll-free). If you would like assistance from a USPTO Customer Service Representative or access to the automated information system, call 800-786-9199 (IN USA OR CANADA) or 571-272-1000.

/CAI CHEN/
Examiner, Art Unit 2425

Notice of References Cited	Application/Control No. 11/241,748	Applicant(s)/Patent Under Reexamination MONK ET AL.	
	Examiner CAI CHEN	Art Unit 2425	Page 1 of 1

U.S. PATENT DOCUMENTS

*		Document Number Country Code-Number-Kind Code	Date MM-YYYY	Name	Classification
*	A	US-2005/0185632	08-2005	Draves et al.	370/351
	B	US-			
	C	US-			
	D	US-			
	E	US-			
	F	US-			
	G	US-			
	H	US-			
	I	US-			
	J	US-			
	K	US-			
	L	US-			
	M	US-			

FOREIGN PATENT DOCUMENTS

*		Document Number Country Code-Number-Kind Code	Date MM-YYYY	Country	Name	Classification
	N					
	O					
	P					
	Q					
	R					
	S					
	T					

NON-PATENT DOCUMENTS

*		Include as applicable: Author, Title Date, Publisher, Edition or Volume, Pertinent Pages)
	U	
	V	
	W	
	X	

*A copy of this reference is not being furnished with this Office action. (See MPEP § 707.05(a).)
Dates in MM-YYYY format are publication dates. Classifications may be US or foreign.

Index of Claims	Application/Control No.	Applicant(s)/Patent Under Reexamination
	11241748	MONK ET AL.
	Examiner	**Art Unit**
	CAI CHEN	2425

✓	Rejected	-	Cancelled	N	Non-Elected	A	Appeal
=	Allowed	÷	Restricted	I	Interference	O	Objected

☐ Claims renumbered in the same order as presented by applicant ☐ CPA ☐ T.D. ☐ R.1.47

CLAIM		DATE								
Final	Original	03/20/2009	09/05/2009	03/17/2010	09/22/2010	02/15/2011	07/19/2011	04/16/2012		
	1	✓	✓	✓	✓	✓	✓	-		
	2	✓	✓	✓	✓	✓	✓	-		
	3	✓	✓	✓	✓	✓	✓	-		
	4	✓	✓	✓	✓	✓	✓	-		
	5	✓	✓	✓	✓	✓	✓	-		
	6	✓	✓	✓	✓	✓	✓	-		
	7	✓	✓	✓	✓	✓	✓	-		
	8	✓	-	✓	✓	-	✓	-		
	9	✓	✓	✓	✓	✓	✓	-		
	10	✓	✓	✓	✓	✓	✓	-		
	11	✓	✓	✓	✓	✓	✓	-		
	12	✓	✓	✓	✓	✓	✓	-		
	13	✓	✓	✓	✓	✓	✓	-		
	14	✓	✓	✓	✓	✓	✓	-		
	15	✓	✓	✓	✓	✓	✓	-		
	16	✓	✓	✓	✓	✓	✓	-		
	17	✓	✓	✓	✓	✓	✓	-		
	18	✓	✓	✓	✓	✓	✓	-		
	19	✓	✓	✓	✓	✓	✓	-		
	20	✓	✓	✓	✓	✓	✓	-		
	21	✓	✓	✓	✓	✓	✓	-		
	22	✓	✓	✓	✓	✓	✓	-		
	23	✓	✓	✓	✓	✓	✓	-		
	24	✓	✓	✓	✓	✓	✓	-		
	25	✓	✓	✓	✓	✓	✓	-		
	26	✓	-	-	-	-	-	-		
	27	✓	-	-	-	-	-	-		
	28	✓	-	-	-	-	-	-		
	29	✓	-	-	-	-	-	-		
	30	✓	-	-	-	-	-	-		
	31	✓	-	-	-	-	-	-		
	32	✓	-	-	-	-	-	-		
	33	✓	-	-	-	-	-	-		
	34	✓	-	-	-	-	-	-		
	35	✓	-	-	-	-	-	-		
	36	✓	-	-	-	-	-	-		

Index of Claims	Application/Control No.	Applicant(s)/Patent Under Reexamination
	11241748	MONK ET AL.
	Examiner	**Art Unit**
	CAI CHEN	2425

✓	Rejected	-	Cancelled	N	Non-Elected	A	Appeal
=	Allowed	÷	Restricted	I	Interference	O	Objected

☐ Claims renumbered in the same order as presented by applicant ☐ CPA ☐ T.D. ☐ R.1.47

CLAIM		DATE								
Final	Original	03/20/2009	09/05/2009	03/17/2010	09/22/2010	02/15/2011	07/19/2011	04/16/2012		
	37	✓	-	-	-	-	-	-		
	38	✓	-	-	-	-	-	-		
	39	✓	-	-	-	-	-	-		
	40	✓	-	-	-	-	-	-		
	41	✓	-	-	-	-	-	-		
	42	✓	-	-	-	-	-	-		
	43	✓	-	-	-	-	-	-		
	44	✓	-	-	-	-	-	-		
	45	✓	-	-	-	-	-	-		
	46			✓	✓	✓	-	-		
	47			✓	✓	✓	✓	✓		

Search Notes	Application/Control No.	Applicant(s)/Patent Under Reexamination
	11241748	MONK ET AL.
	Examiner	**Art Unit**
	CAI CHEN	2425

SEARCHED

Class	Subclass	Date	Examiner

SEARCH NOTES

Search Notes	Date	Examiner
Inventor Searches were performed in East	3/20/2009	cc
Class 725 and 370 are text searches	3/20/2009	cc
The searches are updated	2/15/2011	cc
Consult with Primary Examiner Jerry Dennison in 709	2/15/2011	cc
All searches are updated	7/19/2011	cc
All searches are updated	4/16/2012	cc

INTERFERENCE SEARCH

Class	Subclass	Date	Examiner

/CAI CHEN/ Examiner.Art Unit 2425	

PTO/SB/81 (01-09)
Approved for use through 11/30/2011. OMB 0651-0035
U.S. Patent and Trademark Office; U.S. DEPARTMENT OF COMMERCE
Under the Paperwork Reduction Act of 1995, no persons are required to respond to a collection of information unless it displays a valid OMB control number.

POWER OF ATTORNEY OR REVOCATION OF POWER OF ATTORNEY WITH A NEW POWER OF ATTORNEY AND CHANGE OF CORRESPONDENCE ADDRESS

Application Number	11/241,748
Filing Date	September 29, 2005
First Named Inventor	Anton MONK
Title	Physical Layer Transmitter
Art Unit	2425
Examiner Name	Cai Y. Chen
Attorney Docket Number	E5982-00562 (E040004USU2)

I hereby revoke all previous powers of attorney given in the above-identified application.

☐ A Power of Attorney is submitted herewith.

OR

☒ I hereby appoint Practitioner(s) associated with the following Customer Number as my/our attorney(s) or agent(s) to prosecute the application identified above, and to transact all business in the United States Patent and Trademark Office connected therewith: **77561**

OR

☐ I hereby appoint Practitioner(s) named below as my/our attorney(s) or agent(s) to prosecute the application identified above, and to transact all business in the United States Patent and Trademark Office connected therewith:

Practitioner(s) Name	Registration Number

Please recognize or change the correspondence address for the above-identified application to:

☒ The address associated with the above-mentioned Customer Number.

OR

☐ The address associated with Customer Number:

OR

☐ Firm or Individual Name					
Address					
City		State		Zip	
Country					
Telephone		Email			

I am the:

☐ Applicant/Inventor.

OR

☐ Assignee of record of the entire interest. See 37 CFR 3.71.
Statement under 37 CFR 3.73(b) (Form PTO/SB/96) submitted herewith or filed on _____.

SIGNATURE of Applicant or Assignee of Record

Signature		Date	6-12-12
Name	Bruce W. Greenhaus	Telephone	(858) 768-3679
Title and Company	Vice President, ENTROPIC COMMUNICATIONS, INC.		

NOTE: Signatures of all the inventors or assignees of record of the entire interest or their representative(s) are required. Submit multiple forms if more than one signature is required, see below*.

☒ *Total of 1 forms are submitted.

This collection of information is required by 37 CFR 1.31, 1.32 and 1.33. The information is required to obtain or retain a benefit by the public which is to file (and by the USPTO to process) an application. Confidentiality is governed by 35 U.S.C. 122 and 37 CFR 1.11 and 1.14. This collection is estimated to take 3 minutes to complete, including gathering, preparing, and submitting the completed application form to the USPTO. Time will vary depending upon the individual case. Any comments on the amount of time you require to complete this form and/or suggestions for reducing this burden, should be sent to the Chief Information Officer, U.S. Patent and Trademark Office, U.S. Department of Commerce, P.O. Box 1450, Alexandria, VA 22313-1450. DO NOT SEND FEES OR COMPLETED FORMS TO THIS ADDRESS. **SEND TO: Commissioner for Patents, P.O. Box 1450, Alexandria, VA 22313-1450.**

If you need assistance in completing the form, call 1-800-PTO-9199 and select option 2.

PTO/SB/96 (07-09)
Approved for use through 07/31/2012. OMB 0651-0031
U.S. Patent and Trademark Office; U.S. DEPARTMENT OF COMMERCE
Under the Paperwork Reduction Act of 1995, no persons are required to respond to a collection of information unless it displays a valid OMB control number.

STATEMENT UNDER 37 CFR 3.73(b)

Applicant/Patent Owner: ENTROPIC COMMUNICATIONS, INC.

Application No./Patent No.: 11/241,748 Filed/Issue Date: September 29, 2005

Titled: Physical Layer Transmitter For Use In A Broadband Local Area Network

ENTROPIC COMMUNICATIONS, INC., a Corporation
(Name of Assignee) (Type of Assignee, e.g., corporation, partnership, university, government agency, etc.

states that it is:

1. [X] the assignee of the entire right, title, and interest in;

2. [ ] an assignee of less than the entire right, title, and interest in (The extent (by percentage) of its ownership interest is _____ %); or

3. [ ] the assignee of an undivided interest in the entirety of (a complete assignment from one of the joint inventors was made)

the patent application/patent identified above, by virtue of either:

A. [X] An assignment from the inventor(s) of the patent application/patent identified above. The assignment was recorded in the United States Patent and Trademark Office at Reel 017319, Frame 0389, or for which a copy therefore is attached.

OR

B. [ ] A chain of title from the inventor(s), of the patent application/patent identified above, to the current assignee as follows:

1. From: _____ To: _____
   The document was recorded in the United States Patent and Trademark Office at
   Reel _____, Frame _____, or for which a copy thereof is attached.

2. From: _____ To: _____
   The document was recorded in the United States Patent and Trademark Office at
   Reel _____, Frame _____, or for which a copy thereof is attached.

3. From: _____ To: _____
   The document was recorded in the United States Patent and Trademark Office at
   Reel _____, Frame _____, or for which a copy thereof is attached.

[ ] Additional documents in the chain of title are listed on a supplemental sheet(s).

[ ] As required by 37 CFR 3.73(b)(1)(i), the documentary evidence of the chain of title from the original owner to the assignee was, or concurrently is being, submitted for recordation pursuant to 37 CFR 3.11.

[NOTE: A separate copy (*i.e.*, a true copy of the original assignment document(s)) must be submitted to Assignment Division in accordance with 37 CFR Part 3, to record the assignment in the records of the USPTO. See MPEP 302.08]

The undersigned (whose title is supplied below) is authorized to act on behalf of the assignee.

Signature _____ Date 6-12-12

Bruce W. Greenhaus
Printed or Typed Name

Vice President
Title

This collection of information is required by 37 CFR 3.73(b). The information is required to obtain or retain a benefit by the public which is to file (and by the USPTO to process) an application. Confidentiality is governed by 35 U.S.C. 122 and 37 CFR 1.11 and 1.14. This collection is estimated to take 12 minutes to complete, including gathering, preparing, and submitting the completed application form to the USPTO. Time will vary depending upon the individual case. Any comments on the amount of time you require to complete this form and/or suggestions for reducing this burden, should be sent to the Chief Information Officer, U.S. Patent and Trademark Office, U.S. Department of Commerce, P.O. Box 1450, Alexandria, VA 22313-1450. DO NOT SEND FEES OR COMPLETED FORMS TO THIS ADDRESS. **SEND TO: Commissioner for Patents, P.O. Box 1450, Alexandria, VA 22313-1450.**

If you need assistance in completing the form, call 1-800-PTO-9199 and select option 2.

Electronic Acknowledgement Receipt

EFS ID:	13040061
Application Number:	11241748
International Application Number:	
Confirmation Number:	2829
Title of Invention:	Physical layer transmitter for use in a broadband local area network
First Named Inventor/Applicant Name:	Anton Monk
Customer Number:	77330
Filer:	James Y.C. Sze/Ruth Der
Filer Authorized By:	James Y.C. Sze
Attorney Docket Number:	E040004USU2
Receipt Date:	18-JUN-2012
Filing Date:	29-SEP-2005
Time Stamp:	15:36:42
Application Type:	Utility under 35 USC 111(a)

Payment information:

Submitted with Payment	no

File Listing:

Document Number	Document Description	File Name	File Size(Bytes)/ Message Digest	Multi Part /.zip	Pages (if appl.)
1	Power of Attorney	poachngcorradd.pdf	126341 6da2277f530c9147d05c290a10047bbb49987ed2	no	1

Warnings:

Information:

2	Assignee showing of ownership per 37 CFR 3.73(b).	statement373.pdf	139579 6d0cacd1bc7fd603933876b933096b437fbc6e7b	no	1
Warnings:					
Information:					
			Total Files Size (in bytes):	265920	

This Acknowledgement Receipt evidences receipt on the noted date by the USPTO of the indicated documents, characterized by the applicant, and including page counts, where applicable. It serves as evidence of receipt similar to a Post Card, as described in MPEP 503.

<u>New Applications Under 35 U.S.C. 111</u>
If a new application is being filed and the application includes the necessary components for a filing date (see 37 CFR 1.53(b)-(d) and MPEP 506), a Filing Receipt (37 CFR 1.54) will be issued in due course and the date shown on this Acknowledgement Receipt will establish the filing date of the application.

<u>National Stage of an International Application under 35 U.S.C. 371</u>
If a timely submission to enter the national stage of an international application is compliant with the conditions of 35 U.S.C. 371 and other applicable requirements a Form PCT/DO/EO/903 indicating acceptance of the application as a national stage submission under 35 U.S.C. 371 will be issued in addition to the Filing Receipt, in due course.

<u>New International Application Filed with the USPTO as a Receiving Office</u>
If a new international application is being filed and the international application includes the necessary components for an international filing date (see PCT Article 11 and MPEP 1810), a Notification of the International Application Number and of the International Filing Date (Form PCT/RO/105) will be issued in due course, subject to prescriptions concerning national security, and the date shown on this Acknowledgement Receipt will establish the international filing date of the application.

UNITED STATES PATENT AND TRADEMARK OFFICE

UNITED STATES DEPARTMENT OF COMMERCE
United States Patent and Trademark Office
Address: COMMISSIONER FOR PATENTS
P.O. Box 1450
Alexandria, Virginia 22313-1450
www.uspto.gov

APPLICATION NUMBER	FILING OR 371(C) DATE	FIRST NAMED APPLICANT	ATTY. DOCKET NO./TITLE
11/241,748	09/29/2005	Anton Monk	E5982-00562 (E040004USU2)

CONFIRMATION NO. 2829

POA ACCEPTANCE LETTER

77561
Duane Morris LLP (Entropic)
IP Department
30 South 17th Street
Philadelphia, PA 19103-4196

OC000000055013470

Date Mailed: 06/25/2012

NOTICE OF ACCEPTANCE OF POWER OF ATTORNEY

This is in response to the Power of Attorney filed 06/18/2012.

The Power of Attorney in this application is accepted. Correspondence in this application will be mailed to the above address as provided by 37 CFR 1.33.

/zabraha/

Office of Data Management, Application Assistance Unit (571) 272-4000, or (571) 272-4200, or 1-888-786-0101

UNITED STATES PATENT AND TRADEMARK OFFICE

UNITED STATES DEPARTMENT OF COMMERCE
United States Patent and Trademark Office
Address: COMMISSIONER FOR PATENTS
P.O. Box 1450
Alexandria, Virginia 22313-1450
www.uspto.gov

APPLICATION NUMBER	FILING OR 371(C) DATE	FIRST NAMED APPLICANT	ATTY. DOCKET NO./TITLE
11/241,748	09/29/2005	Anton Monk	E040004USU2

CONFIRMATION NO. 2829

77330
ENTROPIC COMMUNICATIONS, INC.
6290 SEQUENCE DRIVE
SAN DIEGO, CA 92121

POWER OF ATTORNEY NOTICE

OC000000055013433

Date Mailed: 06/25/2012

NOTICE REGARDING CHANGE OF POWER OF ATTORNEY

This is in response to the Power of Attorney filed 06/18/2012.

- The Power of Attorney to you in this application has been revoked by the assignee who has intervened as provided by 37 CFR 3.71. Future correspondence will be mailed to the new address of record(37 CFR 1.33).

/zabraha/

Office of Data Management, Application Assistance Unit (571) 272-4000, or (571) 272-4200, or 1-888-786-0101

IN THE UNITED STATES PATENT AND TRADEMARK OFFICE

In re application of: **Anton Monk et al.** Examiner: **Chen**

Serial No.: **11/241,748** Group Art Unit: **2425**

Filed: **September 29, 2005** Confirmation No.: **2829**

For: **PHYSICAL LAYER TRANSMITTER FOR USE IN A BROADBAND LOCAL AREA NETWORK**

CERTIFICATE OF TRANSMISSION UNDER 37 C.F.R. 1.8

I hereby certify that this correspondence is being electronically transmitted to the United States Patent and Trademark Office, Commissioner for Patents, P.O. Box 1450, Alexandria, Virginia 22313-1450 on the date shown below.

Date: August 20, 2012

Maria E. Provencio

Examiner Cai Y. Chen
Mail Stop Amendment
Commissioner for Patents
P.O. Box 1450
Alexandria, VA 22313-1450

Dear Sir:

Applicants submit the following in response to the Office Action dated April 18, 2012.

Amendments to the Claims begin on page 2 of this paper.

Remarks/Arguments begin on page 3 of this paper.

A **Petition for a 1-Month Extension of Time** and the appropriate fee, are filed herewith.

AMENDMENTS TO THE CLAIMS

1-46. (Cancelled)

47. (Previously Presented) A modem for communication to at least one node across at least one channel of a coaxial network, the modem comprising:

a transmitter; and

a MAC layer in signal communication with the transmitter, the MAC layer using at least one probe packet as an echo profile probe to measure node delay spread on the network and the MAC layer optimizing the preamble and cyclic prefix requirements or other parameters in response to the measured node delay spread on the network;

wherein the transmitter communicates the at least one transmit packet.

48. (New) The modem of claim 47 wherein the one probe packet has a payload, and the payload includes pseudo random time domain samples generated by a pseudo random sequence.

49. (New) The modem of claim 48 wherein the payload is transmitted with a binary phase shift keying (BPSK) modulated single carrier at the center frequency of the channel.

50. (New) The modem of claim 49 wherein a length of the one probe packet is provided by the MAC layer.

51. (New) The modem of claim 47 wherein the one probe packet has a payload, and the payload consists of pseudo random time domain samples generated by a pseudo random

sequence.

52. (New) The modem of claim 51 wherein the payload is transmitted with a binary phase shift keying (BPSK) modulated single carrier at the center frequency of the channel.

53. (New) The modem of claim 52 wherein a length of the one probe packet is provided by the MAC layer.

REMARKS

Claim 47 was rejected.

Dependent claims 48-53 are new and ultimately depend on independent claim 47.

Claims 47-53 are pending.

Rejections under 35 U.S.C. § 103

Claim 47

The Examiner rejected Claim 47 under 35 U.S.C. §103(a) as being unpatentable over U.S. Patent No. 6,052,380 (Bell) in view of U.S. Patent Publication 2005/0185632 (Draves JR et al.), and further in view of U.S. Patent Publication 2005/0120097 (Walton et al.).

The Patent and Trademark Office "has the burden of showing a prima facie case of obviousness." *In re Mayne*, 104 F.3d 1339, 1341 (Fed. Cir. 1997); *In re Sullivan*, 84 USPQ.2d 1034, 1038 (Fed. Cir. 2007). However, the Patent and Trademark Office fails this burden because: 1. there is no motivation to combine the art cited by the Examiner, as the proposed combination would result in an entirely different device, and 2. the combination fails to show or teach each and every claim limitation of the claimed invention.

1. There is no motivation to combine the cited references.

First, The Examiner is using impermissible hindsight reasoning to pick here-and-there from among the references to construct a hypothetical combination which obviates the claims. As stated in In re Gordon, 18 USPQ.2d 1885, 1888 (Fed. Cir. 1991):

It is impermissible, however, simply to engage in a hindsight reconstruction of the claimed invention, using the applicants structure as a template and selecting elements from references to fill the gaps. Interconnect Planning, 774 F.2d at 1143, 227 USPQ at 551. ***The references themselves*** must provide some teaching whereby the applicant's combination would have been obvious. [Emphasis added]

Bell discloses a network adapter utilizing an Ethernet protocol and digital subscriber line physical layer driver for improved performance. Draves JR et al discloses a method of routing

paragraphs in an ad hoc network in accordance with a link quality source routing protocol. Walton et al. teaches an efficient control channel structure in a wireless communication system. Given the diversity in the different types of networks described, it would not be obvious to one of ordinary skill in the art to combine the references in the manner described by the Examiner as the references themselves does not provide such a teaching.

2. The combination fails to disclose each and every limitation of the claimed invention.

Applicants respectfully assert that the combination does not teach each-and-every element of claim 47.

As the Examiner admits on page 3 of the Office Action, Bell does not explicitly teach "a MAC layer in signal communication with the transmitter, the MAC layer using at least one probe packet as an echo profile probe to measure node delay spread on the network and the MAC layer optimizing the preamble and cyclic prefix requirements or other parameters in response to the measured node delay spread on the network." Furthermore, the Examiner admits that Draves JR et al. "does not explicitly disclose[s] MAC layer utilizes at least one probe packets in order to optimized the preamble and cyclic prefix requirements or other parameters. Instead, the Examiner relies on paragraphs 43 and 38-40 of Walton et al. to disclose the optimizing of the preamble and cyclic prefix requirements in response to the measured node delay spread on the network. However, paragraph 40 of Walton et al. specifically mentions that the cyclic prefixes of different lengths may be used for the OFDM symbols, depending on the ***expected*** delay spread; it says nothing about "...the MAC layer optimizing the preamble and cyclic prefix requirements or other parameters ***in response*** to the measured node delay spread on the network."

Accordingly, for at least the foregoing reasons, claim 47 is patentable over Bell, Draves JR et al., and Walton et al. Applicants, therefore, respectfully request that the Examiner reconsider and withdraw the rejection of claim 47 under 35 U.S.C. §103(a).

Dependent Claims 48-53

Dependent claims 48-53 are dependent on allowable claim 47, and can be allowed on that basis alone.

CONCLUSION

Based on the foregoing, each of pending claims 47-53 is in allowable form and the application in condition for allowance, which action is respectfully and expeditiously requested.

The Assistant Commissioner for Patents is hereby authorized to charge any fees necessary to give effect to this filing and to credit any excess payment that may be associated with this communication, to Deposit Account 04-1679.

Respectfully submitted,

Dated: August 20, 2012

James Y.C. Sze, Reg. No. 43,943
Attorney for Applicant

DUANE MORRIS LLP
Suite 2900
750 B Street
San Diego, CA 92101-4681
Telephone: (619) 744-2200
Facsimile: (619) 744-2201

Electronic Patent Application Fee Transmittal

Application Number:	11241748
Filing Date:	29-Sep-2005
Title of Invention:	Physical layer transmitter for use in a broadband local area network
First Named Inventor/Applicant Name:	Anton Monk
Filer:	James Y.C. Sze/Maria Provencio
Attorney Docket Number:	E5982-00562 (E040004USU2)

Filed as Large Entity

Utility under 35 USC 111(a) Filing Fees

Description	Fee Code	Quantity	Amount	Sub-Total in USD($)
Basic Filing:				
Pages:				
Claims:				
Miscellaneous-Filing:				
Petition:				
Patent-Appeals-and-Interference:				
Post-Allowance-and-Post-Issuance:				
Extension-of-Time:				
Extension - 1 month with $0 paid	1251	1	150	150

Description	Fee Code	Quantity	Amount	Sub-Total in USD($)
Miscellaneous:				
			Total in USD ($)	**150**

Electronic Acknowledgement Receipt	
EFS ID:	13540181
Application Number:	11241748
International Application Number:	
Confirmation Number:	2829
Title of Invention:	Physical layer transmitter for use in a broadband local area network
First Named Inventor/Applicant Name:	Anton Monk
Customer Number:	77561
Filer:	James Y.C. Sze/Maria Provencio
Filer Authorized By:	James Y.C. Sze
Attorney Docket Number:	E5982-00562 (E040004USU2)
Receipt Date:	20-AUG-2012
Filing Date:	29-SEP-2005
Time Stamp:	19:35:45
Application Type:	Utility under 35 USC 111(a)

Payment information:

Submitted with Payment	yes
Payment Type	Deposit Account
Payment was successfully received in RAM	$150
RAM confirmation Number	6130
Deposit Account	041679
Authorized User	
The Director of the USPTO is hereby authorized to charge indicated fees and credit any overpayment as follows: Charge any Additional Fees required under 37 C.F.R. Section 1.21 (Miscellaneous fees and charges)	

File Listing:

Document Number	Document Description	File Name	File Size(Bytes)/ Message Digest	Multi Part /.zip	Pages (if appl.)
1	Amendment/Req. Reconsideration-After Non-Final Reject	E5982-00562Response.pdf	902718 18c7e905c3d074b8b5ae19867f4752a48e1feade	no	7
Warnings:					
Information:					
2	Fee Worksheet (SB06)	fee-info.pdf	30292 87e400ff7f7531d144769caa0e7063f9e548446b	no	2
Warnings:					
Information:					
		Total Files Size (in bytes):	933010		

This Acknowledgement Receipt evidences receipt on the noted date by the USPTO of the indicated documents, characterized by the applicant, and including page counts, where applicable. It serves as evidence of receipt similar to a Post Card, as described in MPEP 503.

<u>New Applications Under 35 U.S.C. 111</u>
If a new application is being filed and the application includes the necessary components for a filing date (see 37 CFR 1.53(b)-(d) and MPEP 506), a Filing Receipt (37 CFR 1.54) will be issued in due course and the date shown on this Acknowledgement Receipt will establish the filing date of the application.

<u>National Stage of an International Application under 35 U.S.C. 371</u>
If a timely submission to enter the national stage of an international application is compliant with the conditions of 35 U.S.C. 371 and other applicable requirements a Form PCT/DO/EO/903 indicating acceptance of the application as a national stage submission under 35 U.S.C. 371 will be issued in addition to the Filing Receipt, in due course.

<u>New International Application Filed with the USPTO as a Receiving Office</u>
If a new international application is being filed and the international application includes the necessary components for an international filing date (see PCT Article 11 and MPEP 1810), a Notification of the International Application Number and of the International Filing Date (Form PCT/RO/105) will be issued in due course, subject to prescriptions concerning national security, and the date shown on this Acknowledgement Receipt will establish the international filing date of the application.

PTO/SB/06 (07-06)
Approved for use through 1/31/2007. OMB 0651-0032
U.S. Patent and Trademark Office; U.S. DEPARTMENT OF COMMERCE
Under the Paperwork Reduction Act of 1995, no persons are required to respond to a collection of information unless it displays a valid OMB control number.

PATENT APPLICATION FEE DETERMINATION RECORD

Substitute for Form PTO-875

Application or Docket Number	Filing Date	☐ To be Mailed
11/241,748	09/29/2005	

APPLICATION AS FILED – PART I

FOR	(Column 1) NUMBER FILED	(Column 2) NUMBER EXTRA	SMALL ENTITY ☐ RATE ($)	SMALL ENTITY FEE ($)	OR	OTHER THAN SMALL ENTITY RATE ($)	OTHER THAN SMALL ENTITY FEE ($)
☐ BASIC FEE (37 CFR 1.16(a), (b), or (c))	N/A	N/A	N/A			N/A	
☐ SEARCH FEE (37 CFR 1.16(k), (i), or (m))	N/A	N/A	N/A			N/A	
☐ EXAMINATION FEE (37 CFR 1.16(o), (p), or (q))	N/A	N/A	N/A			N/A	
TOTAL CLAIMS (37 CFR 1.16(i))	minus 20 =	*	X $ =		OR	X $ =	
INDEPENDENT CLAIMS (37 CFR 1.16(h))	minus 3 =	*	X $ =			X $ =	
☐ APPLICATION SIZE FEE (37 CFR 1.16(s))	If the specification and drawings exceed 100 sheets of paper, the application size fee due is $250 ($125 for small entity) for each additional 50 sheets or fraction thereof. See 35 U.S.C. 41(a)(1)(G) and 37 CFR 1.16(s).						
☐ MULTIPLE DEPENDENT CLAIM PRESENT (37 CFR 1.16(j))							
* If the difference in column 1 is less than zero, enter "0" in column 2.			TOTAL			TOTAL	

APPLICATION AS AMENDED – PART II

AMENDMENT 08/20/2012

	(Column 1) CLAIMS REMAINING AFTER AMENDMENT		(Column 2) HIGHEST NUMBER PREVIOUSLY PAID FOR	(Column 3) PRESENT EXTRA	SMALL ENTITY RATE ($)	SMALL ENTITY ADDITIONAL FEE ($)	OR	OTHER THAN SMALL ENTITY RATE ($)	OTHER THAN SMALL ENTITY ADDITIONAL FEE ($)
Total (37 CFR 1.16(i))	* 7	Minus	** 45	= 0	X $ =		OR	X $60=	0
Independent (37 CFR 1.16(h))	* 1	Minus	***3	= 0	X $ =		OR	X $250=	0
☐ Application Size Fee (37 CFR 1.16(s))									
☐ FIRST PRESENTATION OF MULTIPLE DEPENDENT CLAIM (37 CFR 1.16(j))							OR		
					TOTAL ADD'L FEE		OR	TOTAL ADD'L FEE	0

AMENDMENT

	(Column 1) CLAIMS REMAINING AFTER AMENDMENT		(Column 2) HIGHEST NUMBER PREVIOUSLY PAID FOR	(Column 3) PRESENT EXTRA	SMALL ENTITY RATE ($)	SMALL ENTITY ADDITIONAL FEE ($)	OR	OTHER THAN SMALL ENTITY RATE ($)	OTHER THAN SMALL ENTITY ADDITIONAL FEE ($)
Total (37 CFR 1.16(i))	*	Minus	**	=	X $ =		OR	X $ =	
Independent (37 CFR 1.16(h))	*	Minus	***	=	X $ =		OR	X $ =	
☐ Application Size Fee (37 CFR 1.16(s))									
☐ FIRST PRESENTATION OF MULTIPLE DEPENDENT CLAIM (37 CFR 1.16(j))							OR		
					TOTAL ADD'L FEE		OR	TOTAL ADD'L FEE	

* If the entry in column 1 is less than the entry in column 2, write "0" in column 3.
** If the "Highest Number Previously Paid For" IN THIS SPACE is less than 20, enter "20".
*** If the "Highest Number Previously Paid For" IN THIS SPACE is less than 3, enter "3".
The "Highest Number Previously Paid For" (Total or Independent) is the highest number found in the appropriate box in column 1.

Legal Instrument Examiner:
/MARY HOLMES/

This collection of information is required by 37 CFR 1.16. The information is required to obtain or retain a benefit by the public which is to file (and by the USPTO to process) an application. Confidentiality is governed by 35 U.S.C. 122 and 37 CFR 1.14. This collection is estimated to take 12 minutes to complete, including gathering, preparing, and submitting the completed application form to the USPTO. Time will vary depending upon the individual case. Any comments on the amount of time you require to complete this form and/or suggestions for reducing this burden, should be sent to the Chief Information Officer, U.S. Patent and Trademark Office, U.S. Department of Commerce, P.O. Box 1450, Alexandria, VA 22313-1450. DO NOT SEND FEES OR COMPLETED FORMS TO THIS ADDRESS. **SEND TO: Commissioner for Patents, P.O. Box 1450, Alexandria, VA 22313-1450.**
If you need assistance in completing the form, call 1-800-PTO-9199 and select option 2.

UNITED STATES PATENT AND TRADEMARK OFFICE

UNITED STATES DEPARTMENT OF COMMERCE
United States Patent and Trademark Office
Address: COMMISSIONER FOR PATENTS
P.O. Box 1450
Alexandria, Virginia 22313-1450
www.uspto.gov

APPLICATION NO.	FILING DATE	FIRST NAMED INVENTOR	ATTORNEY DOCKET NO.	CONFIRMATION NO.
11/241,748	09/29/2005	Anton Monk	E5982-00562 (E040004USU2)	2829

77561 7590 10/17/2012
Duane Morris LLP (Entropic)
IP Department
30 South 17th Street
Philadelphia, PA 19103-4196

EXAMINER
CHEN, CAI Y

ART UNIT	PAPER NUMBER
2425	

MAIL DATE	DELIVERY MODE
10/17/2012	PAPER

Please find below and/or attached an Office communication concerning this application or proceeding.

The time period for reply, if any, is set in the attached communication.

PTOL-90A (Rev. 04/07)

Office Action Summary	Application No.	Applicant(s)	
	11/241,748	MONK ET AL.	
	Examiner	Art Unit	
	CAI CHEN	2425	

-- The MAILING DATE of this communication appears on the cover sheet with the correspondence address --

Period for Reply

A SHORTENED STATUTORY PERIOD FOR REPLY IS SET TO EXPIRE 3 MONTH(S) OR THIRTY (30) DAYS, WHICHEVER IS LONGER, FROM THE MAILING DATE OF THIS COMMUNICATION.

- Extensions of time may be available under the provisions of 37 CFR 1.136(a). In no event, however, may a reply be timely filed after SIX (6) MONTHS from the mailing date of this communication.
- If NO period for reply is specified above, the maximum statutory period will apply and will expire SIX (6) MONTHS from the mailing date of this communication.
- Failure to reply within the set or extended period for reply will, by statute, cause the application to become ABANDONED (35 U.S.C. § 133). Any reply received by the Office later than three months after the mailing date of this communication, even if timely filed, may reduce any earned patent term adjustment. See 37 CFR 1.704(b).

Status

1)☒ Responsive to communication(s) filed on 20 August 2012.

2a)☒ This action is **FINAL**. 2b)☐ This action is non-final.

3)☐ An election was made by the applicant in response to a restriction requirement set forth during the interview on _____; the restriction requirement and election have been incorporated into this action.

4)☐ Since this application is in condition for allowance except for formal matters, prosecution as to the merits is closed in accordance with the practice under *Ex parte Quayle*, 1935 C.D. 11, 453 O.G. 213.

Disposition of Claims

5)☒ Claim(s) 47-53 is/are pending in the application.

5a) Of the above claim(s) _____ is/are withdrawn from consideration.

6)☐ Claim(s) _____ is/are allowed.

7)☒ Claim(s) 47-53 is/are rejected.

8)☐ Claim(s) _____ is/are objected to.

9)☐ Claim(s) _____ are subject to restriction and/or election requirement.

Application Papers

10)☐ The specification is objected to by the Examiner.

11)☐ The drawing(s) filed on _____ is/are: a)☐ accepted or b)☐ objected to by the Examiner.

Applicant may not request that any objection to the drawing(s) be held in abeyance. See 37 CFR 1.85(a).

Replacement drawing sheet(s) including the correction is required if the drawing(s) is objected to. See 37 CFR 1.121(d).

12)☐ The oath or declaration is objected to by the Examiner. Note the attached Office Action or form PTO-152.

Priority under 35 U.S.C. § 119

13)☐ Acknowledgment is made of a claim for foreign priority under 35 U.S.C. § 119(a)-(d) or (f).

a)☐ All b)☐ Some * c)☐ None of:

1.☐ Certified copies of the priority documents have been received.

2.☐ Certified copies of the priority documents have been received in Application No. _____.

3.☐ Copies of the certified copies of the priority documents have been received in this National Stage application from the International Bureau (PCT Rule 17.2(a)).

* See the attached detailed Office action for a list of the certified copies not received.

Attachment(s)

1) ☒ Notice of References Cited (PTO-892)
2) ☐ Notice of Draftsperson's Patent Drawing Review (PTO-948)
3) ☐ Information Disclosure Statement(s) (PTO/SB/08) Paper No(s)/Mail Date _____.
4) ☐ Interview Summary (PTO-413) Paper No(s)/Mail Date. _____ .
5) ☐ Notice of Informal Patent Application
6) ☐ Other: _____.

DETAILED ACTION

Response to Arguments

Applicant's arguments filed 08/20/2012 have been fully considered but they are not persuasive.

Regarding claim 47, on page 4-5 of the applicant's remarks, applicant's remarks traversing the rejection of the instant claim is acknowledged and considered;

In response, the examiner respectfully disagrees. In response to applicant's argument that the examiner's conclusion of obviousness is based upon improper hindsight reasoning, it must be recognized that any judgment on obviousness is in a sense necessarily a reconstruction based upon hindsight reasoning. But so long as it takes into account only knowledge which was within the level of ordinary skill at the time the claimed invention was made, and does not include knowledge gleaned only from the applicant's disclosure, such a reconstruction is proper. See *In re McLaughlin*, 443 F.2d 1392, 170 USPQ 209 (CCPA 1971).

In response to applicant stated that Walton says nothing about "optimizing the preamble and cyclic prefix requirements or other parameters in response to the measured node delay spread on the network," the examiner would like to point that Walton discloses the preamble is optimized by including a beacon pilot that indicates the specific set of modulation symbols (Fig. 6A, para. 77), further Walton discloses that the optimum cyclic prefix is determined to reduce the ISI distortion depend on the expected delay of the channel network, in this case, the

expected delay has to be determined and measured at one point (para. 40-41), as such the cyclic prefix is optimized based on the measured delay of the channel network.

Claim Rejections - 35 USC § 103

1. The following is a quotation of 35 U.S.C. 103(a) which forms the basis for all obviousness rejections set forth in this Office action:

> (a) A patent may not be obtained though the invention is not identically disclosed or described as set forth in section 102 of this title, if the differences between the subject matter sought to be patented and the prior art are such that the subject matter as a whole would have been obvious at the time the invention was made to a person having ordinary skill in the art to which said subject matter pertains. Patentability shall not be negatived by the manner in which the invention was made.

2. Claim 47 is rejected under 35 U.S.C. 103(a) as being unpatentable over Bell (6,052,380) in view of Draves JR et al. (US 2005/0185632 A1, hereinafter refers as Draves JR) and further in view of Walton (US 2005/0120097).

Regarding claim 47, Bell discloses a modem for communication to at least one node across an at least one channel coaxial network (Fig. 1 and 2, el. 200), the modem comprising:

a transmitter (Fig. 2, col. 7, lines 55-60);

a MAC layer in signal communication with the transmitter (col. 8, lines 5-35, Fig. 2, el. 222, DSP Physical layer driver),

wherein the MAC layer utilizes at least one probe packet for modulation optimization (col. 8, lines, DMT modulation)

Wherein the transmitter communicates the at least one transmit packets (Fig. 2, col. 7, lines 55-60).

Bell does not explicitly the MAC layer utilizes at least one probe packet as an echo profile probe is to measure node delay spread on the network and the MAC layer optimizing the preamble and cyclic prefix requirements or other parameters in response to the measured node delay spread on the network;

Draves JR teaches the MAC layer utilizes at least one probe packet as an echo profile probe is to measure node delay spread on the network (para. 70-71, the probe packets are used to measure the delay between two nodes).

It would be obvious to one of ordinary in the art at the time of invention to modify Bell to include Draves JR in order to find the shortest path between two nodes (para. 75).

Bell in view of Draves JR does not explicitly discloses MAC layer optimizing the preamble and cyclic prefix requirements or other parameters,

Walton teaches the MAC layer (para. 43) optimizing the preamble (Fig. 6A) and cyclic prefix requirements or other parameters in response to the measured node delay spread on the network (para. 38-40, optimum cyclic prefix is determined to reduce the ISI distortion depend on the measured delay of the channel network);

It would be obvious to one of ordinary in the art at the time of invention to modify Bell in view of Draves Jr to include Walton in order for a system to improve the communication link between a transmitter and receiver.

3. Claim 48 and 51 are rejected under 35 U.S.C. 103(a) as being unpatentable over Bell (6,052,380) in view of Draves JR et al. (US 2005/0185632 A1, hereinafter refers as Draves JR) and further in view of Walton (US 2005/0120097) and further in view of Denton (5,923,653).

Regarding claim 48, Bell in view of Draves Jr in view of Walton discloses all limitation of claim 47, and further discloses wherein the one probe packet has a payload (Draves Jr, para. 70-71),

Bell in view of Draves Jr in view of Walton does not explicitly disclose the payload includes pseudo random time domain samples generated by a pseudo random sequence.

Denton teaches the payload includes pseudo random time domain samples generated by a pseudo random sequence (col. 6, lines 4-10).

It would be obvious to one of ordinary in the art at the time of invention to modify Bell in view of Draves Jr in view of Walton to include Denton in order for a system to improve the transmitted data integrity over the network to be received.

Regarding claim 51, the instant claim is analyzed with respect to claim 48.

4. Claim 49 and 52 are rejected under 35 U.S.C. 103(a) as being unpatentable over Bell (6,052,380) in view of Draves JR et al. (US 2005/0185632 A1, hereinafter refers as Draves JR) and further in view of Walton (US

2005/0120097) and in view of Denton further in view of Terry et al. (US 2002/0059634 A1, hereinafter refers as Terry).

Regarding claim 49, Bell in view of Draves Jr in view of Walton in view of Denton discloses all limitation of claim 48,

Bell in view of Draves Jr in view of Walton in view of Denton does not explicitly disclose wherein the payload is transmitted with a binary phase shift keying (BPSK) modulated single carrier at the center frequency of the channel.

Terry teaches wherein the payload is transmitted with a binary phase shift keying (BPSK) modulated single carrier at the center frequency of the channel (para. 46).

It would be obvious to one of ordinary in the art at the time of invention to modify Bell in view of Draves Jr in view of Walton in view of Denton to include Terry in order for a system to improve the transmitted data integrity over the network to be received.

Regarding claim 52, the instant claim is analyzed with respect to claim 49.

5. Claim 50 and 53 are rejected under 35 U.S.C. 103(a) as being unpatentable over Bell (6,052,380) in view of Draves JR et al. (US 2005/0185632 A1, hereinafter refers as Draves JR) in view of Walton in view of Denton in view of Terry and further in view of Wang et al. (US 2004/0085894 A1, hereinafter refers as Wang)

Regarding claim 50, Bell in view of Draves Jr in view of Walton in view of Denton in view of Terry discloses all limitation of claim 49,

Bell in view of Draves Jr in view of Walton in view of Denton in view of Terry does not explicitly disclose wherein a length of the one probe packet is provided by the MAC layer.

Wang teaches wherein a length of the one probe packet is provided by the MAC layer (para. 71).

It would be obvious to one of ordinary in the art at the time of invention to modify Bell in view of Draves Jr in view of Walton to include Terry in order for a system to improve the transmitted data integrity over the network to be received.

Regarding claim 53, the instant claim is analyzed with respect to claim 50.

Conclusion

THIS ACTION IS MADE FINAL. Applicant is reminded of the extension of time policy as set forth in 37 CFR 1.136(a).

A shortened statutory period for reply to this final action is set to expire THREE MONTHS from the mailing date of this action. In the event a first reply is filed within TWO MONTHS of the mailing date of this final action and the advisory action is not mailed until after the end of the THREE-MONTH shortened statutory period, then the shortened statutory period will expire on the date the advisory action is mailed, and any extension fee pursuant to 37 CFR 1.136(a) will be

calculated from the mailing date of the advisory action. In no event, however, will the statutory period for reply expire later than SIX MONTHS from the mailing date of this final action.

Any inquiry concerning this communication or earlier communications from the examiner should be directed to CAI CHEN whose telephone number is (571)270-5679. The examiner can normally be reached on 7:30 am to 4:30 pm.

If attempts to reach the examiner by telephone are unsuccessful, the examiner's supervisor, Brian Pendleton can be reached on 571-272-7527. The fax phone number for the organization where this application or proceeding is assigned is 571-273-8300.

Information regarding the status of an application may be obtained from the Patent Application Information Retrieval (PAIR) system. Status information for published applications may be obtained from either Private PAIR or Public PAIR. Status information for unpublished applications is available through Private PAIR only. For more information about the PAIR system, see http://pair-direct.uspto.gov. Should you have questions on access to the Private PAIR system, contact the Electronic Business Center (EBC) at 866-217-9197 (toll-free). If you would like assistance from a USPTO Customer Service Representative or access to the automated information system, call 800-786-9199 (IN USA OR CANADA) or 571-272-1000.

/CAI CHEN/
Examiner, Art Unit 2425

/Brian T Pendleton/
Supervisory Patent Examiner, Art Unit 2425

Notice of References Cited	Application/Control No. 11/241,748	Applicant(s)/Patent Under Reexamination MONK ET AL.	
	Examiner CAI CHEN	Art Unit 2425	Page 1 of 1

U.S. PATENT DOCUMENTS

*		Document Number Country Code-Number-Kind Code	Date MM-YYYY	Name	Classification
*	A	US-5,923,653	07-1999	Denton, I. Claude	370/375
*	B	US-2002/0059634	05-2002	Terry et al.	725/111
*	C	US-2004/0085894	05-2004	Wang et al.	370/216
	D	US-			
	E	US-			
	F	US-			
	G	US-			
	H	US-			
	I	US-			
	J	US-			
	K	US-			
	L	US-			
	M	US-			

FOREIGN PATENT DOCUMENTS

*		Document Number Country Code-Number-Kind Code	Date MM-YYYY	Country	Name	Classification
	N					
	O					
	P					
	Q					
	R					
	S					
	T					

NON-PATENT DOCUMENTS

*		Include as applicable: Author, Title Date, Publisher, Edition or Volume, Pertinent Pages)
	U	
	V	
	W	
	X	

*A copy of this reference is not being furnished with this Office action. (See MPEP § 707.05(a).)
Dates in MM-YYYY format are publication dates. Classifications may be US or foreign.

Search Notes	Application/Control No.	Applicant(s)/Patent Under Reexamination
	11241748	MONK ET AL.
	Examiner	**Art Unit**
	CAI CHEN	2425

SEARCHED

Class	Subclass	Date	Examiner

SEARCH NOTES

Search Notes	Date	Examiner
Inventor Searches were performed in East	3/20/2009	cc
Class 725 and 370 are text searches	3/20/2009	cc
The searches are updated	2/15/2011	cc
Consult with Primary Examiner Jerry Dennison in 709	2/15/2011	cc
All searches are updated	7/19/2011	cc
All searches are updated	4/16/2012	cc

INTERFERENCE SEARCH

Class	Subclass	Date	Examiner

Index of Claims	Application/Control No.	Applicant(s)/Patent Under Reexamination
	11241748	MONK ET AL.
	Examiner	**Art Unit**
	CAI CHEN	2425

✓	Rejected	-	Cancelled	N	Non-Elected	A	Appeal
=	Allowed	÷	Restricted	I	Interference	O	Objected

☐ Claims renumbered in the same order as presented by applicant ☐ CPA ☐ T.D. ☐ R.1.47

CLAIM		DATE								
Final	Original	03/20/2009	09/05/2009	03/17/2010	09/22/2010	02/15/2011	07/19/2011	04/16/2012	10/02/2012	
	1	✓	✓	✓	✓	✓	✓	-	-	
	2	✓	✓	✓	✓	✓	✓	-	-	
	3	✓	✓	✓	✓	✓	✓	-	-	
	4	✓	✓	✓	✓	✓	✓	-	-	
	5	✓	✓	✓	✓	✓	✓	-	-	
	6	✓	✓	✓	✓	✓	✓	-	-	
	7	✓	✓	✓	✓	✓	✓	-	-	
	8	✓	-	✓	✓	-	✓	-	-	
	9	✓	✓	✓	✓	✓	✓	-	-	
	10	✓	✓	✓	✓	✓	✓	-	-	
	11	✓	✓	✓	✓	✓	✓	-	-	
	12	✓	✓	✓	✓	✓	✓	-	-	
	13	✓	✓	✓	✓	✓	✓	-	-	
	14	✓	✓	✓	✓	✓	✓	-	-	
	15	✓	✓	✓	✓	✓	✓	-	-	
	16	✓	✓	✓	✓	✓	✓	-	-	
	17	✓	✓	✓	✓	✓	✓	-	-	
	18	✓	✓	✓	✓	✓	✓	-	-	
	19	✓	✓	✓	✓	✓	✓	-	-	
	20	✓	✓	✓	✓	✓	✓	-	-	
	21	✓	✓	✓	✓	✓	✓	-	-	
	22	✓	✓	✓	✓	✓	✓	-	-	
	23	✓	✓	✓	✓	✓	✓	-	-	
	24	✓	✓	✓	✓	✓	✓	-	-	
	25	✓	✓	✓	✓	✓	✓	-	-	
	26	✓	-	-	-	-	-	-	-	
	27	✓	-	-	-	-	-	-	-	
	28	✓	-	-	-	-	-	-	-	
	29	✓	-	-	-	-	-	-	-	
	30	✓	-	-	-	-	-	-	-	
	31	✓	-	-	-	-	-	-	-	
	32	✓	-	-	-	-	-	-	-	
	33	✓	-	-	-	-	-	-	-	
	34	✓	-	-	-	-	-	-	-	
	35	✓	-	-	-	-	-	-	-	
	36	✓	-	-	-	-	-	-	-	

Index of Claims	Application/Control No.	Applicant(s)/Patent Under Reexamination
	11241748	MONK ET AL.
	Examiner	**Art Unit**
	CAI CHEN	2425

✓	Rejected	-	Cancelled	N	Non-Elected	A	Appeal
=	Allowed	÷	Restricted	I	Interference	O	Objected

☐ Claims renumbered in the same order as presented by applicant ☐ CPA ☐ T.D. ☐ R.1.47

CLAIM		DATE								
Final	Original	03/20/2009	09/05/2009	03/17/2010	09/22/2010	02/15/2011	07/19/2011	04/16/2012	10/02/2012	
	37	✓	-	-	-	-	-	-	-	
	38	✓	-	-	-	-	-	-	-	
	39	✓	-	-	-	-	-	-	-	
	40	✓	-	-	-	-	-	-	-	
	41	✓	-	-	-	-	-	-	-	
	42	✓	-	-	-	-	-	-	-	
	43	✓	-	-	-	-	-	-	-	
	44	✓	-	-	-	-	-	-	-	
	45	✓	-	-	-	-	-	-	-	
	46			✓	✓	✓	-	-	-	
	47			✓	✓	✓	✓	✓	✓	
	48								✓	
	49								✓	
	50								✓	
	51								✓	
	52								✓	
	53								✓	

IN THE UNITED STATES PATENT AND TRADEMARK OFFICE

In re application of: **Anton Monk et al.** Examiner: **Chen**

Serial No.: **11/241,748** Group Art Unit: **2425**

Filed: **September 29, 2005** Confirmation No.: **2829**

For: **PHYSICAL LAYER TRANSMITTER FOR USE IN A BROADBAND LOCAL AREA NETWORK**

CERTIFICATE OF TRANSMISSION UNDER 37 C.F.R. 1.8

I hereby certify that this correspondence is being electronically transmitted to the United States Patent and Trademark Office, Commissioner for Patents, P.O. Box 1450, Alexandria, Virginia 22313-1450 on the date shown below.

Date: December 17, 2012

Maria E. Provencio

Examiner Cai Y. Chen
Mail Stop Amendment
Commissioner for Patents
P.O. Box 1450
Alexandria, VA 22313-1450

RESPONSE TO FINAL OFFICE ACTION OF OCTOBER 17, 2012

Dear Sir:

Applicants submit the following in response to the Office Action dated October 17, 2012.

Amendments to the Claims begin on page 2 of this paper.

Remarks/Arguments begin on page 4 of this paper.

AMENDMENTS TO THE CLAIMS

1-46. (Cancelled)

47. (Previously Presented) A modem for communication to at least one node across at least one channel of a coaxial network, the modem comprising:

a transmitter; and

a MAC layer in signal communication with the transmitter, the MAC layer using at least one probe packet as an echo profile probe to measure node delay spread on the network and the MAC layer optimizing the preamble and cyclic prefix requirements or other parameters in response to the measured node delay spread on the network;

wherein the transmitter communicates the at least one transmit packet.

48. (Previously Presented) The modem of claim 47 wherein the one probe packet has a payload, and the payload includes pseudo random time domain samples generated by a pseudo random sequence.

49. (Previously Presented) The modem of claim 48 wherein the payload is transmitted with a binary phase shift keying (BPSK) modulated single carrier at the center frequency of the channel.

50. (Previously Presented) The modem of claim 49 wherein a length of the one probe packet is provided by the MAC layer.

51. (Previously Presented) The modem of claim 47 wherein the one probe packet has a payload, and the payload consists of pseudo random time domain samples generated by a

pseudo random sequence.

52. (Previously Presented) The modem of claim 51 wherein the payload is transmitted with a binary phase shift keying (BPSK) modulated single carrier at the center frequency of the channel.

53. (Previously Presented) The modem of claim 52 wherein a length of the one probe packet is provided by the MAC layer.

REMARKS

Claims 47-53 were rejected.

Claims 47-53 are pending.

Rejections under 35 U.S.C. § 103

Claims 47-53 are all rejected as obvious.

The Patent and Trademark Office "has the burden of showing a prima facie case of obviousness." *In re Mayne*, 104 F.3d 1339, 1341 (Fed. Cir. 1997); *In re Sullivan*, 84 USPQ.2d 1034, 1038 (Fed. Cir. 2007). However, the Patent and Trademark Office fails this burden because: 1. there is no motivation to combine the art cited by the Examiner, as the proposed combination would result in an entirely different device, and 2. the combination fails to show or teach each and every claim limitation of the claimed invention.

1. There is no motivation to combine the cited references.

Applicant agrees with the Examiner that knowledge of one of ordinary skill in the art is necessary in the showing of obviousness. **However, Applicant respectfully asserts that one of ordinary skill in the art would not have combined the cited references in the manner suggested by the Examiner, as nothing in the cited references suggests the combination**. In essence, **Applicant argues that the Examiner's combination uses knowledge gleaned from the Applicants disclosure and not the prior art**.

First, The Examiner is using impermissible hindsight reasoning to pick here-and-there from among the references to construct a hypothetical combination which obviates the claims. As stated in In re Gordon, 18 USPQ.2d 1885, 1888 (Fed. Cir. 1991):

It is impermissible, however, simply to engage in a hindsight reconstruction of the claimed invention, using the applicants structure as a template and selecting elements from references to fill the gaps. Interconnect Planning, 774 F.2d at 1143, 227 USPQ at 551. ***The references themselves*** must provide some teaching whereby the applicant's combination would have been obvious. [Emphasis added]

Bell discloses a network adapter utilizing an Ethernet protocol and digital subscriber line physical layer driver for improved performance. Draves JR et al discloses a method of routing paragraphs in an ad hoc network in accordance with a link quality source routing protocol. Walton et al. teaches an efficient control channel structure in a wireless communication system. Given the diversity in the different types of networks described, it would not be obvious to one of ordinary skill in the art to combine the references in the manner described by the Examiner as the references themselves does not provide such a teaching.

2. The combination fails to disclose each and every limitation of the claimed invention.

Even if the cited references were combined, the combination fails to disclose each-and-every limitation of the claimed invention.

Claim 47

The Examiner rejected Claim 47 under 35 U.S.C. §103(a) as being unpatentable over U.S. Patent No. 6,052,380 (Bell) in view of U.S. Patent Publication 2005/0185632 (Draves JR et al.), and further in view of U.S. Patent Publication 2005/0120097 (Walton et al.).

Applicants respectfully assert that the combination does not teach each-and-every element of claim 47.

As the Examiner admits on page 4 of the Final Office Action, Bell does not explicitly teach "a MAC layer in signal communication with the transmitter, the MAC layer using at least one probe packet as an echo profile probe to measure node delay spread on the network and the MAC layer optimizing the preamble and cyclic prefix requirements or other parameters in response to the measured node delay spread on the network."

The Examiner admits that Draves JR et al. does not explicitly disclose the MAC layer utilizes at least one probe packets in order to optimized the preamble and cyclic prefix requirements or other parameters. Instead, the Examiner relies on paragraphs 43 and 38-40 of Walton et al. to disclose the optimizing of the preamble and cyclic prefix requirements in response to the measured node delay spread on the network. However, paragraph 40 of Walton et al. specifically mentions that the cyclic prefixes of different lengths may be used for the OFDM

symbols, depending on the ***expected*** delay spread; it says nothing about "...the MAC layer optimizing the preamble and cyclic prefix requirements or other parameters ***in response*** to the measured node delay spread on the network."

In the "Response to Arguments" section of the Final Office Action (pages 2-3), the Examiner asserts that Walton discloses the preamble is optimized by including a beacon pilot that indicates the specific set of modulation symbols (FIG. 6A, paragraph 77). While Applicant agrees that paragraph [0077] says that a preamble 510 includes a beacon pilot portion 512 and a MIMO pilot portion 514, paragraph [0077] cannot be construed to teaching optimization of preamble and cyclic prefix requirements in response to measured node delay spread on the network. Even with the addition of paragraphs 40 and 41, such an optimization is not taught within the reference.

Accordingly, for at least the foregoing reasons, claim 47 is patentable over Bell, Draves JR et al., and Walton et al. Applicants, therefore, respectfully request that the Examiner reconsider and withdraw the rejection of claim 47 under 35 U.S.C. §103(a).

Claims 48-53

Claims 48-53 ultimately depend upon allowable claim 47. As the additional cited references fail to remedy the deficiencies of Bell, Draves JR et al., and Walton et al., these claims should also be allowable.

CONCLUSION

Based on the foregoing, each of pending claims 47-53 is in allowable form and the application in condition for allowance, which action is respectfully and expeditiously requested.

The Assistant Commissioner for Patents is hereby authorized to charge any fees necessary to give effect to this filing and to credit any excess payment that may be associated with this communication, to Deposit Account 04-1679.

Respectfully submitted,

Dated: December 17, 2012

/James Y.C. Sze/
James Y.C. Sze, Reg. No. 43,943
Attorney for Applicant

DUANE MORRIS LLP
Suite 2900
750 B Street
San Diego, CA 92101-4681
Telephone: (619) 744-2200
Facsimile: (619) 744-2201

Electronic Acknowledgement Receipt

EFS ID:	14491872
Application Number:	11241748
International Application Number:	
Confirmation Number:	2829
Title of Invention:	Physical layer transmitter for use in a broadband local area network
First Named Inventor/Applicant Name:	Anton Monk
Customer Number:	77561
Filer:	James Y.C. Sze/Maria Provencio
Filer Authorized By:	James Y.C. Sze
Attorney Docket Number:	E5982-00562 (E040004USU2)
Receipt Date:	17-DEC-2012
Filing Date:	29-SEP-2005
Time Stamp:	17:53:57
Application Type:	Utility under 35 USC 111(a)

Payment information:

Submitted with Payment	no

File Listing:

Document Number	Document Description	File Name	File Size(Bytes)/ Message Digest	Multi Part /.zip	Pages (if appl.)
1	Amendment After Final	E5982-00562Response.pdf	966165 869ea1de1c9421d861db5c7953368f332b33d22b	no	7

Warnings:

Information:

Total Files Size (in bytes):	966165

This Acknowledgement Receipt evidences receipt on the noted date by the USPTO of the indicated documents, characterized by the applicant, and including page counts, where applicable. It serves as evidence of receipt similar to a Post Card, as described in MPEP 503.

New Applications Under 35 U.S.C. 111
If a new application is being filed and the application includes the necessary components for a filing date (see 37 CFR 1.53(b)-(d) and MPEP 506), a Filing Receipt (37 CFR 1.54) will be issued in due course and the date shown on this Acknowledgement Receipt will establish the filing date of the application.

National Stage of an International Application under 35 U.S.C. 371
If a timely submission to enter the national stage of an international application is compliant with the conditions of 35 U.S.C. 371 and other applicable requirements a Form PCT/DO/EO/903 indicating acceptance of the application as a national stage submission under 35 U.S.C. 371 will be issued in addition to the Filing Receipt, in due course.

New International Application Filed with the USPTO as a Receiving Office
If a new international application is being filed and the international application includes the necessary components for an international filing date (see PCT Article 11 and MPEP 1810), a Notification of the International Application Number and of the International Filing Date (Form PCT/RO/105) will be issued in due course, subject to prescriptions concerning national security, and the date shown on this Acknowledgement Receipt will establish the international filing date of the application.

PTO/SB/06 (07-06)
Approved for use through 1/31/2007. OMB 0651-0032
U.S. Patent and Trademark Office; U.S. DEPARTMENT OF COMMERCE
Under the Paperwork Reduction Act of 1995, no persons are required to respond to a collection of information unless it displays a valid OMB control number.

PATENT APPLICATION FEE DETERMINATION RECORD

Substitute for Form PTO-875

Application or Docket Number	Filing Date	☐ To be Mailed
11/241,748	09/29/2005	

APPLICATION AS FILED – PART I

FOR	(Column 1) NUMBER FILED	(Column 2) NUMBER EXTRA	SMALL ENTITY RATE ($)	SMALL ENTITY FEE ($)	OR	OTHER THAN SMALL ENTITY RATE ($)	OTHER THAN SMALL ENTITY FEE ($)
☐ BASIC FEE (37 CFR 1.16(a), (b), or (c))	N/A	N/A	N/A			N/A	
☐ SEARCH FEE (37 CFR 1.16(k), (i), or (m))	N/A	N/A	N/A			N/A	
☐ EXAMINATION FEE (37 CFR 1.16(o), (p), or (q))	N/A	N/A	N/A			N/A	
TOTAL CLAIMS (37 CFR 1.16(i))	minus 20 =	*	X $ =		OR	X $ =	
INDEPENDENT CLAIMS (37 CFR 1.16(h))	minus 3 =	*	X $ =			X $ =	
☐ APPLICATION SIZE FEE (37 CFR 1.16(s))	If the specification and drawings exceed 100 sheets of paper, the application size fee due is $250 ($125 for small entity) for each additional 50 sheets or fraction thereof. See 35 U.S.C. 41(a)(1)(G) and 37 CFR 1.16(s).						
☐ MULTIPLE DEPENDENT CLAIM PRESENT (37 CFR 1.16(j))							
* If the difference in column 1 is less than zero, enter "0" in column 2.			TOTAL			TOTAL	

APPLICATION AS AMENDED – PART II

AMENDMENT 12/17/2012

	(Column 1) CLAIMS REMAINING AFTER AMENDMENT		(Column 2) HIGHEST NUMBER PREVIOUSLY PAID FOR	(Column 3) PRESENT EXTRA	SMALL ENTITY RATE ($)	SMALL ENTITY ADDITIONAL FEE ($)	OR	OTHER THAN SMALL ENTITY RATE ($)	OTHER THAN SMALL ENTITY ADDITIONAL FEE ($)
Total (37 CFR 1.16(i))	* 7	Minus	** 45	= 0	X $ =		OR	X $62=	0
Independent (37 CFR 1.16(h))	* 1	Minus	***3	= 0	X $ =		OR	X $250=	0
☐ Application Size Fee (37 CFR 1.16(s))									
☐ FIRST PRESENTATION OF MULTIPLE DEPENDENT CLAIM (37 CFR 1.16(j))							OR		
					TOTAL ADD'L FEE		OR	TOTAL ADD'L FEE	0

AMENDMENT

	(Column 1) CLAIMS REMAINING AFTER AMENDMENT		(Column 2) HIGHEST NUMBER PREVIOUSLY PAID FOR	(Column 3) PRESENT EXTRA	SMALL ENTITY RATE ($)	SMALL ENTITY ADDITIONAL FEE ($)	OR	OTHER THAN SMALL ENTITY RATE ($)	OTHER THAN SMALL ENTITY ADDITIONAL FEE ($)
Total (37 CFR 1.16(i))	*	Minus	**	=	X $ =		OR	X $ =	
Independent (37 CFR 1.16(h))	*	Minus	***	=	X $ =		OR	X $ =	
☐ Application Size Fee (37 CFR 1.16(s))									
☐ FIRST PRESENTATION OF MULTIPLE DEPENDENT CLAIM (37 CFR 1.16(j))							OR		
					TOTAL ADD'L FEE		OR	TOTAL ADD'L FEE	

* If the entry in column 1 is less than the entry in column 2, write "0" in column 3.
** If the "Highest Number Previously Paid For" IN THIS SPACE is less than 20, enter "20".
*** If the "Highest Number Previously Paid For" IN THIS SPACE is less than 3, enter "3".
The "Highest Number Previously Paid For" (Total or Independent) is the highest number found in the appropriate box in column 1.

Legal Instrument Examiner:
/TONGELINA TUBBS/

This collection of information is required by 37 CFR 1.16. The information is required to obtain or retain a benefit by the public which is to file (and by the USPTO to process) an application. Confidentiality is governed by 35 U.S.C. 122 and 37 CFR 1.14. This collection is estimated to take 12 minutes to complete, including gathering, preparing, and submitting the completed application form to the USPTO. Time will vary depending upon the individual case. Any comments on the amount of time you require to complete this form and/or suggestions for reducing this burden, should be sent to the Chief Information Officer, U.S. Patent and Trademark Office, U.S. Department of Commerce, P.O. Box 1450, Alexandria, VA 22313-1450. DO NOT SEND FEES OR COMPLETED FORMS TO THIS ADDRESS. **SEND TO: Commissioner for Patents, P.O. Box 1450, Alexandria, VA 22313-1450.**
If you need assistance in completing the form, call 1-800-PTO-9199 and select option 2.

UNITED STATES PATENT AND TRADEMARK OFFICE

UNITED STATES DEPARTMENT OF COMMERCE
United States Patent and Trademark Office
Address: COMMISSIONER FOR PATENTS
P.O. Box 1450
Alexandria, Virginia 22313-1450
www.uspto.gov

APPLICATION NO.	FILING DATE	FIRST NAMED INVENTOR	ATTORNEY DOCKET NO.	CONFIRMATION NO.
11/241,748	09/29/2005	Anton Monk	E5982-00562 (E040004USU2)	2829

77561 7590 01/02/2013
Duane Morris LLP (Entropic)
IP Department
30 South 17th Street
Philadelphia, PA 19103-4196

EXAMINER
CHEN, CAI Y

ART UNIT	PAPER NUMBER
2425	

MAIL DATE	DELIVERY MODE
01/02/2013	PAPER

Please find below and/or attached an Office communication concerning this application or proceeding.

The time period for reply, if any, is set in the attached communication.

PTOL-90A (Rev. 04/07)

Advisory Action Before the Filing of an Appeal Brief	**Application No.** *11/241,748*	**Applicant(s)** MONK ET AL.
	Examiner CAI CHEN	**Art Unit** 2425

--The MAILING DATE of this communication appears on the cover sheet with the correspondence address --

THE REPLY FILED 17 December 2012 FAILS TO PLACE THIS APPLICATION IN CONDITION FOR ALLOWANCE.

NO NOTICE OF APPEAL FILED

1. ☒ The reply was filed after a final rejection. No Notice of Appeal has been filed. To avoid abandonment of this application, applicant must timely file one of the following replies: (1) an amendment, affidavit, or other evidence, which places the application in condition for allowance;

(2) a Notice of Appeal (with appeal fee) in compliance with 37 CFR 41.31; or (3) a Request for Continued Examination (RCE) in compliance with 37 CFR 1.114 if this is a utility or plant application. Note that RCEs are not permitted in design applications. The reply must be filed within one of the following time periods:

a) ☒ The period for reply expires 3 months from the mailing date of the final rejection.

b) ☐ The period for reply expires on: (1) the mailing date of this Advisory Action; or (2) the date set forth in the final rejection, whichever is later. In no event, however, will the statutory period for reply expire later than SIX MONTHS from the mailing date of the final rejection.

c) ☐ A prior Advisory Action was mailed more than 3 months after the mailing date of the final rejection in response to a first after-final reply filed within 2 months of the mailing date of the final rejection. The current period for reply expires months from the mailing date of *the prior Advisory Action* or SIX MONTHS from the mailing date of the final rejection, whichever is earlier.

Examiner Note: If box 1 is checked, check either box (a), (b) or (c). ONLY CHECK BOX (b) WHEN THIS ADVISORY ACTION IS THE FIRST RESPONSE TO APPLICANT'S FIRST AFTER-FINAL REPLY WHICH WAS FILED WITHIN TWO MONTHS OF THE FINAL REJECTION. ONLY CHECK BOX (c) IN THE LIMITED SITUATION SET FORTH UNDER BOX (c). See MPEP 706.07(f).

Extensions of time may be obtained under 37 CFR 1.136(a). The date on which the petition under 37 CFR 1.136(a) and the appropriate extension fee have been filed is the date for purposes of determining the period of extension and the corresponding amount of the fee. The appropriate extension fee under 37 CFR 1.17(a) is calculated from: (1) the expiration date of the shortened statutory period for reply originally set in the final Office action; or (2) as set forth in (b) or (c) above, if checked. Any reply received by the Office later than three months after the mailing date of the final rejection, even if timely filed, may reduce any earned patent term adjustment. See 37 CFR 1.704(b).

NOTICE OF APPEAL

2. ☐ The Notice of Appeal was filed on _____. A brief in compliance with 37 CFR 41.37 must be filed within two months of the date of filing the Notice of Appeal (37 CFR 41.37(a)), or any extension thereof (37 CFR 41.37(e)), to avoid dismissal of the appeal. Since a Notice of Appeal has been filed, any reply must be filed within the time period set forth in 37 CFR 41.37(a).

AMENDMENTS

3. ☒ The proposed amendments filed after a final rejection, but prior to the date of filing a brief, will not be entered because

a) ☐ They raise new issues that would require further consideration and/or search (see NOTE below);

b) ☐ They raise the issue of new matter (see NOTE below);

c) ☒ They are not deemed to place the application in better form for appeal by materially reducing or simplifying the issues for appeal; and/or

d) ☐ They present additional claims without canceling a corresponding number of finally rejected claims.

NOTE: _____. (See 37 CFR 1.116 and 41.33(a)).

4. ☐ The amendments are not in compliance with 37 CFR 1.121. See attached Notice of Non-Compliant Amendment (PTOL-324).

5. ☐ Applicant's reply has overcome the following rejection(s): _____.

6. ☐ Newly proposed or amended claim(s) _____ would be allowable if submitted in a separate, timely filed amendment canceling the non-allowable claim(s).

7. ☒ For purposes of appeal, the proposed amendment(s): (a) ☒ will not be entered, or (b) ☐ will be entered, and an explanation of how the new or amended claims would be rejected is provided below or appended.

AFFIDAVIT OR OTHER EVIDENCE

8. ☐ The affidavit or other evidence filed after final action, but before or on the date of filing a Notice of Appeal will not be entered because applicant failed to provide a showing of good and sufficient reasons why the affidavit or other evidence is necessary and was not earlier presented. See 37 CFR 1.116(e).

9. ☐ The affidavit or other evidence filed after the date of filing the Notice of Appeal, but prior to the date of filing a brief, will not be entered because the affidavit or other evidence failed to overcome all rejections under appeal and/or appellant fails to provide a showing of good and sufficient reasons why it is necessary and was not earlier presented. See 37 CFR 41.33(d)(1).

10. ☐ The affidavit or other evidence is entered. An explanation of the status of the claims after entry is below or attached.

REQUEST FOR RECONSIDERATION/OTHER

11. ☒ The request for reconsideration has been considered but does NOT place the application in condition for allowance because: See Continuation Sheet.

12. ☐ Note the attached Information *Disclosure Statement*(s). (PTO/SB/08) Paper No(s). _____

13. ☐ Other: _____.

STATUS OF CLAIMS

14. The status of the claim(s) is (or will be) as follows:

Claim(s) allowed: .

Claim(s) objected to: .

Claim(s) rejected: 47-53.

Claim(s) withdrawn from consideration: .

/Brian T Pendleton/ Supervisory Patent Examiner, Art Unit 2425	/CAI CHEN/ Examiner, Art Unit 2425

Response to Arguments
Applicant's arguments filed 12/17/2012 have been fully considered but they are not persuasive.
Regarding claim 47, on page 4-6 of the applicant's remarks, applicant's remarks traversing the rejection of the instant claim is acknowledged and considered;
In response, the examiner respectfully disagrees. Again, in response to applicant's argument that the examiner's conclusion of obviousness is based upon improper hindsight reasoning, it must be recognized that any judgment on obviousness is in a sense necessarily a reconstruction based upon hindsight reasoning. But so long as it takes into account only knowledge which was within the level of ordinary skill at the time the claimed invention was made, and does not include knowledge gleaned only from the applicant's disclosure, such a reconstruction is proper. See In re McLaughlin, 443 F.2d 1392, 170 USPQ 209 (CCPA 1971). In this case, it is commonly known and also disclose in Walton (38-40) that any method that reduce the ISI distortion would render in optimization, thus the communication network is improved.
In response to applicant stated that Walton says nothing about "optimizing the preamble and cyclic prefix requirements or other parameters in response to the measured node delay spread on the network," the examiner would like to point that Walton discloses the preamble is optimized by including a beacon pilot that indicates the specific set of modulation symbols (Fig. 6A, para. 77), further Walton discloses that the optimum cyclic prefix is determined to reduce the ISI distortion depend on the expected delay of the channel network, in this case, the expected delay must has to be determined and measured at one point (para. 40-41), as such the cyclic prefix is optimized based on the measured delay of the channel network. Therefore, the combination of Bell, Draves JR, and Walton discloses the entire claim limitation of claim 47.

DO NOT ENTER: /C.C./

IN THE UNITED STATES PATENT AND TRADEMARK OFFICE

In re application of: **Anton Monk et al.** Examiner: **Chen**

Serial No.: **11/241,748** Group Art Unit: **2425**

Filed: **September 29, 2005** Confirmation No.: **2829**

For: **PHYSICAL LAYER TRANSMITTER FOR USE IN A BROADBAND LOCAL AREA NETWORK**

CERTIFICATE OF TRANSMISSION UNDER 37 C.F.R. 1.8

I hereby certify that this correspondence is being electronically transmitted to the United States Patent and Trademark Office, Commissioner for Patents, P.O. Box 1450, Alexandria, Virginia 22313-1450 on the date shown below.

Date: December 17, 2012

Maria E. Provencio

Examiner Cai Y. Chen
Mail Stop Amendment
Commissioner for Patents
P.O. Box 1450
Alexandria, VA 22313-1450

RESPONSE TO FINAL OFFICE ACTION OF OCTOBER 17, 2012

Dear Sir:

Applicants submit the following in response to the Office Action dated October 17, 2012.

Amendments to the Claims begin on page 2 of this paper.

Remarks/Arguments begin on page 4 of this paper.

PTO/SB/31 (09-12)
Approved for use through 01/31/2013. OMB 0651-0031
U.S. Patent and Trademark Office; U.S. DEPARTMENT OF COMMERCE
Under the Paperwork Reduction Act of 1995, no persons are required to respond to a collection of information unless it displays a valid OMB control number.

NOTICE OF APPEAL FROM THE EXAMINER TO THE PATENT TRIAL AND APPEAL BOARD

Docket Number (Optional): E5982-00562

I hereby certify that this correspondence is being facsimile transmitted to the USPTO EFS-Web transmitted to the USPTO, or or deposited with the United States Postal Service with sufficient postage as first class mail in an envelope addressed to "Commissioner for Patents, P.O. Box 1450, Alexandria, VA 22313-1450" [37 CFR 1.8(a)]

on January 17, 2013

Signature /Maria E. Provencio/

Typed or printed name Maria E. Provencio

In re Application of: Anton Monk

Application Number: 11241748

Filed: 09/29/2005

For: Physical Layer Tarnsmitter for use in a Broadband Local Area Network

Art Unit: 2425

Examiner: Chen, Cai Y

Applicant hereby **appeals** to the Patent Trial and Appeal Board from the last decision of the examiner.

The fee for this Notice of Appeal is (37 CFR 41.20(b)(1)) $ 630.00

☐ Applicant claims small entity status. See 37 CFR 1.27. Therefore, the fee shown above is reduced by half, and the resulting fee is: $ _____

☐ A check in the amount of the fee is enclosed.

☐ Payment by credit card. Form PTO-2038 is attached.

☐ The Director has already been authorized to charge fees in this application to a Deposit Account.

☑ The Director is hereby authorized to charge any fees which may be required, or credit any overpayment to Deposit Account No. 041679 .

☐ A petition for an extension of time under 37 CFR 1.136(a) (PTO/SB/22) is enclosed.

WARNING: Information on this form may become public. Credit card information should not be included on this form. Provide credit card information and authorization on PTO-2038.

I am the

☐ applicant/inventor.

☐ assignee of record of the entire interest. See 37 CFR 3.71. Statement under 37 CFR 3.73(b) is enclosed. (Form PTO/SB/96)

☑ attorney or agent of record. Registration number 43,943.

☐ attorney or agent acting under 37 CFR 1.34. Registration number if acting under 37 CFR 1.34. _____

/James Y.C. Sze/
Signature

James Y.C. Sze
Typed or printed name

619-744-2200
Telephone number

January 17, 2013
Date

NOTE: Signatures of all the inventors or assignees of record of the entire interest or their representative(s) are required. Submit multiple forms if more than one signature is required, see below*.

☐ *Total of _____ forms are submitted.

This collection of information is required by 37 CFR 41.31. The information is required to obtain or retain a benefit by the public which is to file (and by the USPTO to process) an application. Confidentiality is governed by 35 U.S.C. 122 and 37 CFR 1.11, 1.14 and 41.6. This collection is estimated to take 12 minutes to complete, including gathering, preparing, and submitting the completed application form to the USPTO. Time will vary depending upon the individual case. Any comments on the amount of time you require to complete this form and/or suggestions for reducing this burden, should be sent to the Chief Information Officer, U.S. Patent and Trademark Office, U.S. Department of Commerce, P.O. Box 1450, Alexandria, VA 22313-1450. DO NOT SEND FEES OR COMPLETED FORMS TO THIS ADDRESS. **SEND TO: Commissioner for Patents, P.O. Box 1450, Alexandria, VA 22313-1450.**

If you need assistance in completing the form, call 1-800-PTO-9199 and select option 2.

Privacy Act Statement

The **Privacy Act of 1974 (P.L. 93-579)** requires that you be given certain information in connection with your submission of the attached form related to a patent application or patent. Accordingly, pursuant to the requirements of the Act, please be advised that: (1) the general authority for the collection of this information is 35 U.S.C. 2(b)(2); (2) furnishing of the information solicited is voluntary; and (3) the principal purpose for which the information is used by the U.S. Patent and Trademark Office is to process and/or examine your submission related to a patent application or patent. If you do not furnish the requested information, the U.S. Patent and Trademark Office may not be able to process and/or examine your submission, which may result in termination of proceedings or abandonment of the application or expiration of the patent.

The information provided by you in this form will be subject to the following routine uses:

1. The information on this form will be treated confidentially to the extent allowed under the Freedom of Information Act (5 U.S.C. 552) and the Privacy Act (5 U.S.C 552a). Records from this system of records may be disclosed to the Department of Justice to determine whether disclosure of these records is required by the Freedom of Information Act.
2. A record from this system of records may be disclosed, as a routine use, in the course of presenting evidence to a court, magistrate, or administrative tribunal, including disclosures to opposing counsel in the course of settlement negotiations.
3. A record in this system of records may be disclosed, as a routine use, to a Member of Congress submitting a request involving an individual, to whom the record pertains, when the individual has requested assistance from the Member with respect to the subject matter of the record.
4. A record in this system of records may be disclosed, as a routine use, to a contractor of the Agency having need for the information in order to perform a contract. Recipients of information shall be required to comply with the requirements of the Privacy Act of 1974, as amended, pursuant to 5 U.S.C. 552a(m).
5. A record related to an International Application filed under the Patent Cooperation Treaty in this system of records may be disclosed, as a routine use, to the International Bureau of the World Intellectual Property Organization, pursuant to the Patent Cooperation Treaty.
6. A record in this system of records may be disclosed, as a routine use, to another federal agency for purposes of National Security review (35 U.S.C. 181) and for review pursuant to the Atomic Energy Act (42 U.S.C. 218(c)).
7. A record from this system of records may be disclosed, as a routine use, to the Administrator, General Services, or his/her designee, during an inspection of records conducted by GSA as part of that agency's responsibility to recommend improvements in records management practices and programs, under authority of 44 U.S.C. 2904 and 2906. Such disclosure shall be made in accordance with the GSA regulations governing inspection of records for this purpose, and any other relevant (*i.e.*, GSA or Commerce) directive. Such disclosure shall not be used to make determinations about individuals.
8. A record from this system of records may be disclosed, as a routine use, to the public after either publication of the application pursuant to 35 U.S.C. 122(b) or issuance of a patent pursuant to 35 U.S.C. 151. Further, a record may be disclosed, subject to the limitations of 37 CFR 1.14, as a routine use, to the public if the record was filed in an application which became abandoned or in which the proceedings were terminated and which application is referenced by either a published application, an application open to public inspection or an issued patent.
9. A record from this system of records may be disclosed, as a routine use, to a Federal, State, or local law enforcement agency, if the USPTO becomes aware of a violation or potential violation of law or regulation.

Electronic Patent Application Fee Transmittal

Application Number:	11241748
Filing Date:	29-Sep-2005
Title of Invention:	Physical layer transmitter for use in a broadband local area network
First Named Inventor/Applicant Name:	Anton Monk
Filer:	James Y.C. Sze/Maria Provencio
Attorney Docket Number:	E5982-00562 (E040004USU2)

Filed as Large Entity

Utility under 35 USC 111(a) Filing Fees

Description	Fee Code	Quantity	Amount	Sub-Total in USD($)
Basic Filing:				
Pages:				
Claims:				
Miscellaneous-Filing:				
Petition:				
Patent-Appeals-and-Interference:				
Notice of appeal	1401	1	630	630
Post-Allowance-and-Post-Issuance:				
Extension-of-Time:				

Description	Fee Code	Quantity	Amount	Sub-Total in USD($)
Miscellaneous:				
			Total in USD ($)	**630**

Electronic Acknowledgement Receipt	
EFS ID:	14731582
Application Number:	11241748
International Application Number:	
Confirmation Number:	2829
Title of Invention:	Physical layer transmitter for use in a broadband local area network
First Named Inventor/Applicant Name:	Anton Monk
Customer Number:	77561
Filer:	James Y.C. Sze/Maria Provencio
Filer Authorized By:	James Y.C. Sze
Attorney Docket Number:	E5982-00562 (E040004USU2)
Receipt Date:	17-JAN-2013
Filing Date:	29-SEP-2005
Time Stamp:	18:30:24
Application Type:	Utility under 35 USC 111(a)

Payment information:

Submitted with Payment	yes
Payment Type	Deposit Account
Payment was successfully received in RAM	$630
RAM confirmation Number	5909
Deposit Account	041679
Authorized User	
The Director of the USPTO is hereby authorized to charge indicated fees and credit any overpayment as follows: Charge any Additional Fees required under 37 C.F.R. Section 1.21 (Miscellaneous fees and charges)	

File Listing:

Document Number	Document Description	File Name	File Size(Bytes)/ Message Digest	Multi Part /.zip	Pages (if appl.)
1	Notice of Appeal Filed	E5982-00562NoticeofAppeal4044246_1.pdf	217079 4789c6ac35ffd430b4f55a956316aff597d7632c	no	2
Warnings:					
Information:					
2	Fee Worksheet (SB06)	fee-info.pdf	30388 ee7e0cf6545f76a5b73b2428fef71b99fc347462	no	2
Warnings:					
Information:					
		Total Files Size (in bytes):	247467		

This Acknowledgement Receipt evidences receipt on the noted date by the USPTO of the indicated documents, characterized by the applicant, and including page counts, where applicable. It serves as evidence of receipt similar to a Post Card, as described in MPEP 503.

New Applications Under 35 U.S.C. 111
If a new application is being filed and the application includes the necessary components for a filing date (see 37 CFR 1.53(b)-(d) and MPEP 506), a Filing Receipt (37 CFR 1.54) will be issued in due course and the date shown on this Acknowledgement Receipt will establish the filing date of the application.

National Stage of an International Application under 35 U.S.C. 371
If a timely submission to enter the national stage of an international application is compliant with the conditions of 35 U.S.C. 371 and other applicable requirements a Form PCT/DO/EO/903 indicating acceptance of the application as a national stage submission under 35 U.S.C. 371 will be issued in addition to the Filing Receipt, in due course.

New International Application Filed with the USPTO as a Receiving Office
If a new international application is being filed and the international application includes the necessary components for an international filing date (see PCT Article 11 and MPEP 1810), a Notification of the International Application Number and of the International Filing Date (Form PCT/RO/105) will be issued in due course, subject to prescriptions concerning national security, and the date shown on this Acknowledgement Receipt will establish the international filing date of the application.

IN THE UNITED STATES PATENT AND TRADEMARK OFFICE

In Re Application of:
Anton Monk

Serial No.: 11/241,748

Filed: 09/29/2005

For: Physical layer transmitter for use in a broadband local area network

Group Art Unit: 2425

Confirmation No. 2829

APPEAL BRIEF

Mail Stop Appeal Brief - Patent
Commissioner for Patents
P.O. Box 1450
Alexandria, VA 22313-1450

Attention: **CHEN, CAI Y**
Examiner

Dear Sir:

This Appeal Brief is submitted in response to the Final Office Action of October 17, 2012 and upon previous submission of a Notice of Appeal filed on January 17, 2013. Please note the following statements and arguments:

I hereby certify that this correspondence is being electronically deposited with the Commissioner for Patents through the USPTO electronic filing system, on:

April 12, 2013
(Date of Deposit)

Tara Sallee
(Name of Person Making Deposit)

/Tara Sallee/
(Signature)

TABLE of CONTENTS

Real party in interest…….. 3

Related appeals and interference……..... 3

Status of Claims……. 3

Status of Amendments……... 6

Summary of the Claimed Subject Matter…….. 6

I. Overview……6
II. Mapping of Claims to Specification…….. 7

Grounds of rejection to be reviewed on appeal…… 8

Argument……..... 9

I. The Examiner rejected Claims 47 under 35 U.S.C. 103(a)……. 9

II. The Examiner rejected Claims 48 and 51 under 35 U.S.C. 1 03(a) as being unpatentable over Bell (6,052,380) in view of Draves JR et al. (US 2005/0185632 A1, hereinafter refers as Draves JR) and further in view of Walton (US 2005/0120097) and further in view of Denton (5,923,653)……. 12

III. The Examiner rejected Claims 49 and 52 are rejected under 35 U.S.C. 1 03(a) as being unpatentable over Bell (6,052,380) in view of Draves JR et al. (US 2005/0185632 A1, hereinafter refers as Draves JR) and further in view of Walton (US 2005/0120097) and in view of Denton further in view of Terry et al. (US 2002/0059634 A1, hereinafter refers as Terry)……... 12

IV. The Examiner rejected Claims 50 and 53 are rejected under 35 U.S.C. 1 03(a) as being unpatentable over Bell (6,052,380) in view of Draves JR et al. (US 2005/0185632 A1, hereinafter refers as Draves JR) in view of Walton in view of Denton in view of Terry and further in view of Wang et al. (US 2004/0085894 A1, hereinafter refers as Wang)……..13

Claims Appendix……... 14

Evidence Appendix……16

Related Proceedings Appendix…….. 17

Real party in interest

The real party in interest is Entropic Communications, Inc., the assignee of this patent application.

Related appeals and interference

There are no prior and pending appeals, interferences or judicial proceedings known to appellant, the appellant's legal representative, or assignee which may be related to, directly affect or be directly affected by or have a bearing on the Board's decision in the pending appeal.

Status of Claims

Claim 47-53 are currently pending in the application.

Claim 47-53 are on appeal.

On February 4, 2010, Claim 47 was initially presented in an amendment filed together with a Request for Continued Examination.

All claims, including Claim 47, were rejected in a non-final office action dated March 29, 2010.

On July 27, 2010, in response to the office action, arguments were submitted without amendment to Claim 47.

In a final office action mailed on October 1, 2010, all claims, including Claim 47, were rejected.

On February 1, 2011, in response to the final office action, arguments and comments submitted. Claim 47 was not amended.

Applicants filed a Notice of Appeal together with the response after final on February 1, 2011.

The Examiner withdrew the finality of the rejection and cited new grounds for rejections of all claims, including Claim 47 in a Non-Final Office Action dated February 22, 2011.

On May 23rd, 2011, in response to the non-final office action, on Applicants submitted arguments without amendment to Claim 47.

The Examiner rejected all claims, including Claim 47 in a final office action mailed on August 1, 2011.

On October 28, 2011, Applicants responded to the final office action by amending Claim 47 and cancelling all other claims.

In a non-final office action mailed April 18, 2012, the Examiner withdraw the final rejection and rejected Claim 47 based on references not previously cited against Claim 47.

On August 20, 2012, Applicants responded to the Non-final office action by submitting arguments without amendment to Claim 47. In addition, Applicants added Claims 48-53, each of which depend from Claim 47.

The Examiner mailed a final office action on October 17, 2012 rejecting Claim 47-53.

On December 17, 2012, Applicants responded to the final office action mailed on October 17, 2012 by submitting argument without amendment to Claim 47-53.

The Examiner mailed an advisory action on January 2, 2013 in which he stated that the proposed amendments filed after a final rejection, but prior to the date of filing a brief, will not be entered because they are not deemed to place the application in better form for appeal by materially reducing or simplifying the issues for appeal.

Accordingly Claims 47-53 remain pending, each of which currently stands rejected.

1-46. (Previously Cancelled)

47. (Previously Amended) A modem for communication to at least one node across at least one channel of a coaxial network, the modem comprising:

a transmitter; and

a MAC layer in signal communication with the transmitter, the MAC layer using at least one probe packet as an echo profile probe to measure node delay spread on the network and the MAC layer optimizing the preamble and cyclic prefix requirements or other parameters in response to the measured node delay spread on the network;

wherein the transmitter communicates the at least one transmit packet.

48. (Previously Presented) The modem of claim 47 wherein the one probe packet has a payload, and the payload includes pseudo random time domain samples generated by a pseudo random sequence.

49. (Previously Presented) The modem of claim 48 wherein the payload is transmitted with a binary phase shift keying (BPSK) modulated single carrier at the center frequency of the channel.

50. (Previously Presented) The modem of claim 49 wherein a length of the one probe packet is provided by the MAC layer.

51. (Previously Presented) The modem of claim 47 wherein the one probe packet has a payload, and the payload consists of pseudo random time domain samples generated by a pseudo random sequence.

52. (Previously Presented) The modem of claim 51 wherein the payload is transmitted with a binary phase shift keying (BPSK) modulated single carrier at the center frequency of the channel.

53. (Previously Presented) The modem of claim 52 wherein a length of the one probe packet is provided by the MAC layer.

Status of Amendments

An amendment after final was submitted by Applicants on December 17, 2013 which the Examiner deemed not to place the application in better condition for appeal and thus the amendment was not entered.

Summary of the Claimed Subject Matter

I. Overview

The Claims of the present application relate to a method for improving the ability of a network of nodes within a home entertainment network (or other such entertainment network) to communicate with one another over existing coaxial cables that are preinstalled in many homes and buildings today. There are many problems that come with attempts to use existing coaxial cabling for high speed communications between nodes of a network. These include reflections caused by unterminated cable ends that have no device connected to them and are not terminated in an attenuator or other impedance matching device.

In addition, if the network is configured to allow communications between each node of the network and each other node (i.e., as a mesh network, rather than a point to multi-point network) signals must traverse the coaxial cable in directions through signal splitters that were not intended. For example, for one set-top box to talk to another it may be necessary for them to traverse a 4-way signal splitter which is intended to be used to split signals coming from a point of entry (POE) to each of several televisions (or their respective set-top boxes). An Example of this is shown in Fig. 2 (prior art) of the present application in which a signal 262 is intended to be distributed to a number of node devices 250, 252, 254, 256, 258, 260, through a number of splitters 214, 222, 228, 230, 234. Accordingly, when a signal attempts to traverse a splitter from one output to another output, such as is necessary if node device 250 is attempting to communicate with node device 252 through splitter 222, the signal is distorted and highly attenuated.

The inventors of the present invention have determined that one way to ensure high quality communications at high data rates, is to characterize the frequency response of the channel between each pair of devices (i.e., nodes) in the network. Once the frequency response of the channels between each pair of nodes has been characterized, the

characterization of the frequency response of the channel between each pair of nodes can be used to assist in communicating over the channel between those two nodes.

One particularly important parameter to be characterized in the channel between each pair of nodes of the network is the node delay spread on the network. By measuring the node delay spread on the network, preambles of packets to be communicated over the network can be optimized. In the invention recited in Claim 1, the cyclic prefix requirements and other parameters can be optimized in response to the measured node delay spread of the network.

As recited in Claim 48 and 51, the payload of a packet can include pseudo random time domain samples generated by a pseudo random sequence. These samples serve as a probe that can be used to assist in the measurement of the node delay spread of the network. One particularly useful scheme recited in Claim 49 and 52 is to transmit the payload of a probe packet with a binary phase shift keying modulation which is modulated on a single carrier at the center frequency of the channel. Another helpful variation recited in Claim 50 and 53 is for the MAC layer to provide the length of one probe packet.

II. Mapping of Claim to Specification

Claim 47: Claim 47 recites a modem (page 5, line 22) for communication to at least one node (page 2, line 14) across at least one channel (page 5, line 15), the modem comprising a transmitter (page 10, line 5); and a MAC layer (page 10, line 13) in signal communication with the transmitter, the MAC layer (page 10, line 13) using at least one probe packet (page 11, line 16) as an echo profile probe (page 21, line 18) to measure node delay spread on the network (page 21, line 19) and the MAC layer (page 10, line 13) optimizing the preamble (page 21, line 19) and cyclic prefix requirements (page 21, line 19) or other parameters (page 21, line 20) in response to the measured node delay spread (page 21, line 19) on the network; where the transmitter (page 10, line 5) communicates the at least one transmit packet (page 24, line 14, ref. no. 900 in Fig. 9).

Claim 48: Claim 48 recites the modem of Claim 47 wherein the one probe packet (page 11, line 16) has a payload (page 23, line 1), and the payload includes pseudo random time domain samples generated by a pseudo random sequence (page 23, lines 1-2).

Claim 49: Claim 49 recites the modem of Claim 48 wherein the payload (page 23, line 1) is transmitted with a binary phase shift keying (BPSK) modulated single carrier at the center frequency of the channel (page 23, line 2-3).

Claim 50: Claim 50 recites the modem of Claim 49 wherein a length of the one probe packet (page 23, line 3) is provided by the MAC layer (page 23, line 4).

Claim 51: Claim 51 recites the modem of Claim 47 wherein the one probe packet has a payload (page 23, line 1) and the payload consists of pseudo random time domain samples generated by a pseudo random sequence (page 23, line 1-2).

Claim 52: Claim 52 recites the modem of Claim 51 wherein the payload (page 23, line 1) is transmitted with a binary phase shift keying (BPSK) modulated single carrier at the center frequency of the channel (page 23, line 2-3).

Claim 53: Claim 53 recites the modem of Claim 52 wherein a length of the one probe packet (page 23, line 3) is provided by the MAC layer (page 23, line 4).

Grounds of rejection to be reviewed on appeal

Whether Claim 47 has been properly rejected under 35 U.S.C. 103(a) as being unpatentable over U.S. Patent No. 6,052,380 (Bell) in view of U.S. Patent Publication 2005/0185632 (Draves JR et al.), and further in view of U.S. Patent Publication 2005/0120097 (Walton et al.).

Whether Claim 48 and 51 have been properly rejected under 35 U.S.C. 1 03(a) as being unpatentable over Bell (6,052,380) in view of Draves JR et al. (US 2005/0185632 A1, hereinafter refers as Draves JR) and further in view of Walton (US 2005/0120097) and further in view of Denton (5,923,653).

Whether Claim 49 and 52 have been properly rejected under 35 U.S.C. 1 03(a) as being unpatentable over Bell (6,052,380) in view of Draves JR et al. (US 2005/0185632 A1, hereinafter refers as Draves JR) and further in view of Walton (US 2005/0120097) and in view of Denton further in view of Terry et al. (US 2002/0059634 A 1, hereinafter refers as Terry).

Whether Claim 50 and 53 have been properly rejected under 35 U.S.C. 1 03(a) as being unpatentable over Bell (6,052,380) in view of Draves JR et al. (US 2005/0185632 A1, hereinafter refers as Draves JR) in view of Walton in view of Denton in view of Terry and further in view of Wang et al. (US 2004/0085894 A 1, hereinafter refers as Wang)

Argument

I. The Examiner rejected Claims 47 under 35 U.S.C. 103(a) as being unpatentable over U.S. Patent No. 6,052,380 (Bell) in view of U.S. Patent Publication 2005/0185632 (Draves JR et al.), and further in view of U.S. Patent Publication 2005/0120097 (Walton et al.). Appellants respectfully appeal this determination for the following reasons.

The Examiner, in the most recent final office action mailed on October 17, 2012 in response to claims submitted in the amendment submitted by Applicants on August 8th, 2012, states that, in addition to other elements, Bell discloses a MAC layer in signal communication with the transmitter "wherein the MAC layer utilizes at least one probe packet for modulation optimization" (citing col. 8, lines DMT modulation (sic)). The Examiner has clearly not updated the text of his rejection to comport with the amendments that were made on 10/28/11. The presently pending language of Claim 47 reads "a MAC layer in signal communication with the transmitter, the MAC layer using at least one probe packet as an echo probe to measure node delay spread on the network and the MAC layer optimizing the preamble and cyclic prefix requirements or other parameters in response to the measured node delay spread on the network …."

Nonetheless, the Examiner correctly notes that Bell does not explicitly disclose the MAC layer which uses at least one probe packet as an echo profile probe to measure node delay spread on the network and the MAC layer optimizing the preamble and cyclic prefix requirements or other parameters in response to the measured node delay spread on the network.

However, the Examiner contends that Draves JR teaches the MAC layer "utilizes" at least one probe packet as an echo profile probe to measure node delay spread on the network and cites paragraph 70-71 as disclosing in particular that probe packets are used to measure the delay between two nodes.

Paragraph 70 of Draves recites the following:

> FIG. 10B is a flowchart generally showing steps associated with receiving the PktPair probes by a neighbor node in accordance with an embodiment of the invention. At step 1011 the neighbor receives a probe. **If this is the first probe packet (step 1013), the neighbor starts a timer.** (emphasis added). At step 1015 the neighbor receives a probe, and **if this is the second probe in the pair (step 1017), the neighbor stops the timer**. (emphasis added). At step 1019 the neighbor calculates the **delay between the receipt of the first and second packets (i.e., the value of the timer)**. (emphasis added). At step 1021 the neighbor sends this delay value back to the sending node.

It should be clear from this passage to which the Examiner directs our attention (and particularly the selections of this passage highlighted herein) that what is disclosed by Draves is something quite different from what is recited in Claim 47 of the present application. That is, this passage from Draves makes clear that a timer measures the amount of time between the receipt of two different probes and the delay is measured between the arrival of the first probe and the arrival of the second probe. The following paragraph 71 of Draves makes this even more clear. Paragraph 71, also relied upon by the Examiner in rejecting Claim 47, states that:

"[t]he objective of the routing algorithm is to minimize the sum of these delays. If, due to the high loss rate, the second probe packet requires retransmissions by 802.11 ARQ, the delay measured by the neighbor has low bandwidth, the second packet will take more time to traverse the link, which will result in increased delay. If there is traffic in the vicinity of this hop, it will also result in increased delay, since the probe packets must contend for the channel."

It will be very clear to anyone of ordinary skill in the art that the delays and measurements that are disclosed by Draves are not at all related to the delays recited in Claim 47. The delays disclosed in Draves are delays in the execution of messaging (i.e., the timing of the sending of the second message) and the amount of time required for the message to reach it's destination and not the "delay spread of the network" recited in Claim 47.

It is clear black letter law that the terms of a claim must be read in light of the understanding that one of ordinary skill in the art would have based on reading the specification. In the present application, the term "delay" is used five times. Each use reinforces the understanding that the "delay spread of the network" refers to the difference in the amount of

delay encountered by different components of the same signal due to the various frequencies that make up the signal used to communicate the echo probe.

One of the most telling of these is the sentence:

"The cyclic prefix length is dependent on the multi-path delay spread in the cable system and is determined by the NC." (second sentence in paragraph [0082] of the originally filed specification).

The relationship between cyclic prefix length and multipath delay spread is well understood by those skilled in the art and has nothing to do with the type of delay between the two different probes disclosed by Draves. It would be a clear distortion of the proper reading of Claim 47 to attempt to read the claim as having anything at all to do with the delay disclosed by Draves. It should be well noted that as the Supreme Court of the United States has stated on several occasions, including in FESTO v. SHOKETSU KINZOKU KOGYO KABUSHIKI CO., 535 U.S. 722 (US 2002), "the nature of language makes it impossible to capture the essence of a thing in a patent application." While it is the job the USPTO to attempt to clarify any ambiguity that exists in the language of the claims, since the inventor is bound by the original language of his disclosure and cannot go beyond the limits of that disclosure, it is incumbent upon the Examiner to use reasonable means to define terms used in the specification in the manner in which it is clear the Inventor intended such terms to be interpreted when such interpretation would be clear to one of ordinary skill in the art. This really is the crux of the matter. That is, whether it would be clear to one of ordinary skill in the art, and whether the metes and upon issuance will be clear to one of ordinary skill.

In this case, it is imminently clear that invention recited in Claim 47 would not be made obvious to one of ordinary skill in the art by the delay measurement disclosed by Draves, since this delay is substantially different from the delay recited in the present application.

Therefore, the element of a MAC layer in signal communication with the transmitter, the MAC layer **using at least one probe packet as an echo profile probe to measure node delay spread on the network** and the MAC layer optimizing the preamble and cyclic prefix requirements or other parameters in response to the measured node delay spread on the network **is not present in the prior art**. Neither would this element be obvious to one of ordinary skill in the art.

It should be noted that the present application has been pending for a very long time (for 8 years) and that Claim 47 has been present in this application for over three years in essentially the very same form (one amendment was made to ensure that limitations recited were not considered field of use) and with the same limitations present throughout the prosecution. The Examiner has repeatedly cited prior art against this claim without properly reviewing the cited art and without success and has been forced to withdraw his rejections time and time again. Applicants believe that it is the duty of the Examiner to identify the most appropriate prior art on the first attempt to examine the application and not to stretch the process out over several years and several office actions.

II. The Examiner rejected Claims 48 and 51 under 35 U.S.C. 1 03(a) as being unpatentable over Bell (6,052,380) in view of Draves JR et al. (US 2005/0185632 A1, hereinafter refers as Draves JR) and further in view of Walton (US 2005/0120097) and further in view of Denton (5,923,653).

Applicants respectfully contend that the same limitations that are recited in Claim 47 and which are lacking from the cited prior art, are also recited in Claims 48 and 51 by nature of the dependence of these claim on Claim 47. As such, these limitations of Claims 48 and 51 are neither taught nor suggested by the prior art.

Therefore, for the reasons noted with regard to independent Claim 47, Applicants contend that each of the other dependent claims should be considered to be in condition for allowance.

III. The Examiner rejected Claims 49 and 52 are rejected under 35 U.S.C. 1 03(a) as being unpatentable over Bell (6,052,380) in view of Draves JR et al. (US 2005/0185632 A1, hereinafter refers as Draves JR) and further in view of Walton (US 2005/0120097) and in view of Denton further in view of Terry et al. (US 2002/0059634 A1, hereinafter refers as Terry).

Applicants respectfully contend that the same limitations that are recited in Claim 47 and which are lacking from the cited prior art, are also recited in Claims 49 and 52 by nature of the dependence of these claim on Claim 47. As such, these limitations of Claims 49 and 52 are neither taught nor suggested by the prior art.

Therefore, for the reasons noted with regard to independent Claim 47, Applicants contend that each of the other dependent claims should be considered to be in condition for allowance.

IV. The Examiner rejected Claims 50 and 53 are rejected under 35 U.S.C. 1 03(a) as being unpatentable over Bell (6,052,380) in view of Draves JR et al. (US 2005/0185632 A1, hereinafter refers as Draves JR) in view of Walton in view of Denton in view of Terry and further in view of Wang et al. (US 2004/0085894 A1, hereinafter refers as Wang).

Applicants respectfully contend that the same limitations that are recited in Claim 47 and which are lacking from the cited prior art, are also recited in Claims 49 and 52 by nature of the dependence of these claim on Claim 47. As such, these limitations of Claims 49 and 52 are neither taught nor suggested by the prior art.

Therefore, for the reasons noted with regard to independent Claim 47, Applicants contend that each of the other dependent claims should be considered to be in condition for allowance.

Claims Appendix

47. A modem for communication to at least one node across at least one channel of a coaxial network, the modem comprising:

a transmitter; and

a MAC layer in signal communication with the transmitter, the MAC layer using at least one probe packet as an echo profile probe to measure node delay spread on the network and the MAC layer optimizing the preamble and cyclic prefix requirements or other parameters in response to the measured node delay spread on the network;

wherein the transmitter communicates the at least one transmit packet.

48. The modem of claim 47 wherein the one probe packet has a payload, and the payload includes pseudo random time domain samples generated by a pseudo random sequence.

49. The modem of claim 48 wherein the payload is transmitted with a binary phase shift keying (BPSK) modulated single carrier at the center frequency of the channel.

50. The modem of claim 49 wherein a length of the one probe packet is provided by the MAC layer.

51. The modem of claim 47 wherein the one probe packet has a payload, and the payload consists of pseudo random time domain samples generated by a pseudo random sequence.

52. The modem of claim 51 wherein the payload is transmitted with a binary phase shift keying (BPSK) modulated single carrier at the center frequency of the channel.

53. The modem of claim 52 wherein a length of the one probe packet is provided by the MAC layer.

Evidence Appendix

None.

Related proceedings appendix

None.

Respectfully submitted,

Dated: April 9, 2013

By: /Bruce W. Greenhaus/
Bruce W. Greenhaus
Attorney for Applicants
Registration No. 37,339

Entropic Communications, Inc.
6290 Sequence Drive
San Diego, California 92121
Telephone:(619) 980-2612
e-mail address: bruceg@entropic.com

Electronic Patent Application Fee Transmittal

Application Number:	11241748
Filing Date:	29-Sep-2005
Title of Invention:	Physical layer transmitter for use in a broadband local area network
First Named Inventor/Applicant Name:	Anton Monk
Filer:	Bruce Wayne Greenhaus/Tara Sallee
Attorney Docket Number:	E5982-00562 (E040004USU2)

Filed as Large Entity

Utility under 35 USC 111(a) Filing Fees

Description	Fee Code	Quantity	Amount	Sub-Total in USD($)
Basic Filing:				
Pages:				
Claims:				
Miscellaneous-Filing:				
Petition:				
Patent-Appeals-and-Interference:				
Post-Allowance-and-Post-Issuance:				
Extension-of-Time:				
Extension - 1 month with $0 paid	1251	1	200	200

Description	Fee Code	Quantity	Amount	Sub-Total in USD($)
Miscellaneous:				
			Total in USD ($)	**200**

Electronic Acknowledgement Receipt	
EFS ID:	15507717
Application Number:	11241748
International Application Number:	
Confirmation Number:	2829
Title of Invention:	Physical layer transmitter for use in a broadband local area network
First Named Inventor/Applicant Name:	Anton Monk
Customer Number:	77561
Filer:	Bruce Wayne Greenhaus/Tara Sallee
Filer Authorized By:	Bruce Wayne Greenhaus
Attorney Docket Number:	E5982-00562 (E040004USU2)
Receipt Date:	12-APR-2013
Filing Date:	29-SEP-2005
Time Stamp:	16:42:18
Application Type:	Utility under 35 USC 111(a)

Payment information:

Submitted with Payment	yes
Payment Type	Deposit Account
Payment was successfully received in RAM	$200
RAM confirmation Number	3814
Deposit Account	504613
Authorized User	

The Director of the USPTO is hereby authorized to charge indicated fees and credit any overpayment as follows:

Charge any Additional Fees required under 37 C.F.R. Section 1.17 (Patent application and reexamination processing fees)

Charge any Additional Fees required under 37 C.F.R. Section 1.21 (Miscellaneous fees and charges)

File Listing:

Document Number	Document Description	File Name	File Size(Bytes)/ Message Digest	Multi Part /.zip	Pages (if appl.)
1	Appeal Brief Filed	2013-04-12_Appeal_Brief_E040004USU2.pdf	187395 54a1177702fb05c6743277b6da2a10531aad866a	no	18
Warnings:					
Information:					
2	Fee Worksheet (SB06)	fee-info.pdf	30385 b2f28f1a694bd2cfe6a8a6160f677c6b8bc45a53	no	2
Warnings:					
Information:					
		Total Files Size (in bytes):	217780		

This Acknowledgement Receipt evidences receipt on the noted date by the USPTO of the indicated documents, characterized by the applicant, and including page counts, where applicable. It serves as evidence of receipt similar to a Post Card, as described in MPEP 503.

<u>New Applications Under 35 U.S.C. 111</u>
If a new application is being filed and the application includes the necessary components for a filing date (see 37 CFR 1.53(b)-(d) and MPEP 506), a Filing Receipt (37 CFR 1.54) will be issued in due course and the date shown on this Acknowledgement Receipt will establish the filing date of the application.

<u>National Stage of an International Application under 35 U.S.C. 371</u>
If a timely submission to enter the national stage of an international application is compliant with the conditions of 35 U.S.C. 371 and other applicable requirements a Form PCT/DO/EO/903 indicating acceptance of the application as a national stage submission under 35 U.S.C. 371 will be issued in addition to the Filing Receipt, in due course.

<u>New International Application Filed with the USPTO as a Receiving Office</u>
If a new international application is being filed and the international application includes the necessary components for an international filing date (see PCT Article 11 and MPEP 1810), a Notification of the International Application Number and of the International Filing Date (Form PCT/RO/105) will be issued in due course, subject to prescriptions concerning national security, and the date shown on this Acknowledgement Receipt will establish the international filing date of the application.

UNITED STATES PATENT AND TRADEMARK OFFICE

UNITED STATES DEPARTMENT OF COMMERCE
United States Patent and Trademark Office
Address: COMMISSIONER FOR PATENTS
P.O. Box 1450
Alexandria, Virginia 22313-1450
www.uspto.gov

NOTICE OF ALLOWANCE AND FEE(S) DUE

77561 7590 05/31/2013
Duane Morris LLP (Entropic)
IP Department
30 South 17th Street
Philadelphia, PA 19103-4196

EXAMINER
CHEN, CAI Y

ART UNIT	PAPER NUMBER
2425	

DATE MAILED: 05/31/2013

APPLICATION NO.	FILING DATE	FIRST NAMED INVENTOR	ATTORNEY DOCKET NO.	CONFIRMATION NO.
11/241,748	09/29/2005	Anton Monk	E5982-00562 (E040004USU2)	2829

TITLE OF INVENTION: PHYSICAL LAYER TRANSMITTER FOR USE IN A BROADBAND LOCAL AREA NETWORK

APPLN. TYPE	ENTITY STATUS	ISSUE FEE DUE	PUBLICATION FEE DUE	PREV. PAID ISSUE FEE	TOTAL FEE(S) DUE	DATE DUE
nonprovisional	UNDISCOUNTED	$1780	$0	$0	$1780	09/03/2013

THE APPLICATION IDENTIFIED ABOVE HAS BEEN EXAMINED AND IS ALLOWED FOR ISSUANCE AS A PATENT. PROSECUTION ON THE MERITS IS CLOSED. THIS NOTICE OF ALLOWANCE IS NOT A GRANT OF PATENT RIGHTS. THIS APPLICATION IS SUBJECT TO WITHDRAWAL FROM ISSUE AT THE INITIATIVE OF THE OFFICE OR UPON PETITION BY THE APPLICANT. SEE 37 CFR 1.313 AND MPEP 1308.

THE ISSUE FEE AND PUBLICATION FEE (IF REQUIRED) MUST BE PAID WITHIN THREE MONTHS FROM THE MAILING DATE OF THIS NOTICE OR THIS APPLICATION SHALL BE REGARDED AS ABANDONED. THIS STATUTORY PERIOD CANNOT BE EXTENDED. SEE 35 U.S.C. 151. THE ISSUE FEE DUE INDICATED ABOVE DOES NOT REFLECT A CREDIT FOR ANY PREVIOUSLY PAID ISSUE FEE IN THIS APPLICATION. IF AN ISSUE FEE HAS PREVIOUSLY BEEN PAID IN THIS APPLICATION (AS SHOWN ABOVE), THE RETURN OF PART B OF THIS FORM WILL BE CONSIDERED A REQUEST TO REAPPLY THE PREVIOUSLY PAID ISSUE FEE TOWARD THE ISSUE FEE NOW DUE.

HOW TO REPLY TO THIS NOTICE:

I. Review the ENTITY STATUS shown above. If the ENTITY STATUS is shown as SMALL or MICRO, verify whether entitlement to that entity status still applies.

If the ENTITY STATUS is the same as shown above, pay the TOTAL FEE(S) DUE shown above.

If the ENTITY STATUS is changed from that shown above, on PART B - FEE(S) TRANSMITTAL, complete section number 5 titled "Change in Entity Status (from status indicated above)".

For purposes of this notice, small entity fees are 1/2 the amount of undiscounted fees, and micro entity fees are 1/2 the amount of small entity fees.

II. PART B - FEE(S) TRANSMITTAL, or its equivalent, must be completed and returned to the United States Patent and Trademark Office (USPTO) with your ISSUE FEE and PUBLICATION FEE (if required). If you are charging the fee(s) to your deposit account, section "4b" of Part B - Fee(s) Transmittal should be completed and an extra copy of the form should be submitted. If an equivalent of Part B is filed, a request to reapply a previously paid issue fee must be clearly made, and delays in processing may occur due to the difficulty in recognizing the paper as an equivalent of Part B.

III. All communications regarding this application must give the application number. Please direct all communications prior to issuance to Mail Stop ISSUE FEE unless advised to the contrary.

IMPORTANT REMINDER: Utility patents issuing on applications filed on or after Dec. 12, 1980 may require payment of maintenance fees. It is patentee's responsibility to ensure timely payment of maintenance fees when due.

PART B - FEE(S) TRANSMITTAL

Complete and send this form, together with applicable fee(s), to: Mail **Mail Stop ISSUE FEE**
Commissioner for Patents
P.O. Box 1450
Alexandria, Virginia 22313-1450
or Fax (571)-273-2885

INSTRUCTIONS: This form should be used for transmitting the ISSUE FEE and PUBLICATION FEE (if required). Blocks 1 through 5 should be completed where appropriate. All further correspondence including the Patent, advance orders and notification of maintenance fees will be mailed to the current correspondence address as indicated unless corrected below or directed otherwise in Block 1, by (a) specifying a new correspondence address; and/or (b) indicating a separate "FEE ADDRESS" for maintenance fee notifications.

CURRENT CORRESPONDENCE ADDRESS (Note: Use Block 1 for any change of address)

77561 7590 05/31/2013
Duane Morris LLP (Entropic)
IP Department
30 South 17th Street
Philadelphia, PA 19103-4196

Note: A certificate of mailing can only be used for domestic mailings of the Fee(s) Transmittal. This certificate cannot be used for any other accompanying papers. Each additional paper, such as an assignment or formal drawing, must have its own certificate of mailing or transmission.

Certificate of Mailing or Transmission

I hereby certify that this Fee(s) Transmittal is being deposited with the United States Postal Service with sufficient postage for first class mail in an envelope addressed to the Mail Stop ISSUE FEE address above, or being facsimile transmitted to the USPTO (571) 273-2885, on the date indicated below.

(Depositor's name)
(Signature)
(Date)

APPLICATION NO.	FILING DATE	FIRST NAMED INVENTOR	ATTORNEY DOCKET NO.	CONFIRMATION NO.
11/241,748	09/29/2005	Anton Monk	E5982-00562 (E040004USU2)	2829

TITLE OF INVENTION: PHYSICAL LAYER TRANSMITTER FOR USE IN A BROADBAND LOCAL AREA NETWORK

APPLN. TYPE	ENTITY STATUS	ISSUE FEE DUE	PUBLICATION FEE DUE	PREV. PAID ISSUE FEE	TOTAL FEE(S) DUE	DATE DUE
nonprovisional	UNDISCOUNTED	$1780	$0	$0	$1780	09/03/2013

EXAMINER	ART UNIT	CLASS-SUBCLASS
CHEN, CAI Y	2425	725-111000

1. Change of correspondence address or indication of "Fee Address" (37 CFR 1.363).

❑ Change of correspondence address (or Change of Correspondence Address form PTO/SB/122) attached.

❑ "Fee Address" indication (or "Fee Address" Indication form PTO/SB/47; Rev 03-02 or more recent) attached. **Use of a Customer Number is required.**

2. For printing on the patent front page, list

(1) the names of up to 3 registered patent attorneys or agents OR, alternatively,

(2) the name of a single firm (having as a member a registered attorney or agent) and the names of up to 2 registered patent attorneys or agents. If no name is listed, no name will be printed.

1_____
2_____
3_____

3. ASSIGNEE NAME AND RESIDENCE DATA TO BE PRINTED ON THE PATENT (print or type)

PLEASE NOTE: Unless an assignee is identified below, no assignee data will appear on the patent. If an assignee is identified below, the document has been filed for recordation as set forth in 37 CFR 3.11. Completion of this form is NOT a substitute for filing an assignment.

(A) NAME OF ASSIGNEE (B) RESIDENCE: (CITY and STATE OR COUNTRY)

Please check the appropriate assignee category or categories (will not be printed on the patent) : ❑ Individual ❑ Corporation or other private group entity ❑ Government

4a. The following fee(s) are submitted:

❑ Issue Fee
❑ Publication Fee (No small entity discount permitted)
❑ Advance Order - # of Copies _____

4b. Payment of Fee(s): **(Please first reapply any previously paid issue fee shown above)**

❑ A check is enclosed.
❑ Payment by credit card. Form PTO-2038 is attached.
❑ The Director is hereby authorized to charge the required fee(s), any deficiency, or credit any overpayment, to Deposit Account Number _____ (enclose an extra copy of this form).

5. **Change in Entity Status** (from status indicated above)

❑ Applicant certifying micro entity status. See 37 CFR 1.29	NOTE: Absent a valid certification of Micro Entity Status (see form PTO/SB/15A and 15B), issue fee payment in the micro entity amount will not be accepted at the risk of application abandonment.
❑ Applicant asserting small entity status. See 37 CFR 1.27	NOTE: If the application was previously under micro entity status, checking this box will be taken to be a notification of loss of entitlement to micro entity status.
❑ Applicant changing to regular undiscounted fee status.	NOTE: Checking this box will be taken to be a notification of loss of entitlement to small or micro entity status, as applicable.

NOTE: The Issue Fee and Publication Fee (if required) will not be accepted from anyone other than the applicant; a registered attorney or agent; or the assignee or other party in interest as shown by the records of the United States Patent and Trademark Office.

Authorized Signature _____ Date _____

Typed or printed name _____ Registration No. _____

This collection of information is required by 37 CFR 1.311. The information is required to obtain or retain a benefit by the public which is to file (and by the USPTO to process) an application. Confidentiality is governed by 35 U.S.C. 122 and 37 CFR 1.14. This collection is estimated to take 12 minutes to complete, including gathering, preparing, and submitting the completed application form to the USPTO. Time will vary depending upon the individual case. Any comments on the amount of time you require to complete this form and/or suggestions for reducing this burden, should be sent to the Chief Information Officer, U.S. Patent and Trademark Office, U.S. Department of Commerce, P.O. Box 1450, Alexandria, Virginia 22313-1450. DO NOT SEND FEES OR COMPLETED FORMS TO THIS ADDRESS. SEND TO: Commissioner for Patents, P.O. Box 1450, Alexandria, Virginia 22313-1450.

Under the Paperwork Reduction Act of 1995, no persons are required to respond to a collection of information unless it displays a valid OMB control number.

UNITED STATES PATENT AND TRADEMARK OFFICE

UNITED STATES DEPARTMENT OF COMMERCE
United States Patent and Trademark Office
Address: COMMISSIONER FOR PATENTS
P.O. Box 1450
Alexandria, Virginia 22313-1450
www.uspto.gov

APPLICATION NO.	FILING DATE	FIRST NAMED INVENTOR	ATTORNEY DOCKET NO.	CONFIRMATION NO.
11/241,748	09/29/2005	Anton Monk	E5982-00562 (E040004USU2)	2829

77561 7590 05/31/2013
Duane Morris LLP (Entropic)
IP Department
30 South 17th Street
Philadelphia, PA 19103-4196

EXAMINER
CHEN, CAI Y

ART UNIT	PAPER NUMBER
2425	

DATE MAILED: 05/31/2013

Determination of Patent Term Adjustment under 35 U.S.C. 154 (b)
(application filed on or after May 29, 2000)

The Patent Term Adjustment to date is 771 day(s). If the issue fee is paid on the date that is three months after the mailing date of this notice and the patent issues on the Tuesday before the date that is 28 weeks (six and a half months) after the mailing date of this notice, the Patent Term Adjustment will be 771 day(s).

If a Continued Prosecution Application (CPA) was filed in the above-identified application, the filing date that determines Patent Term Adjustment is the filing date of the most recent CPA.

Applicant will be able to obtain more detailed information by accessing the Patent Application Information Retrieval (PAIR) WEB site (http://pair.uspto.gov).

Any questions regarding the Patent Term Extension or Adjustment determination should be directed to the Office of Patent Legal Administration at (571)-272-7702. Questions relating to issue and publication fee payments should be directed to the Customer Service Center of the Office of Patent Publication at 1-(888)-786-0101 or (571)-272-4200.

Privacy Act Statement

The Privacy Act of 1974 (P.L. 93-579) requires that you be given certain information in connection with your submission of the attached form related to a patent application or patent. Accordingly, pursuant to the requirements of the Act, please be advised that: (1) the general authority for the collection of this information is 35 U.S.C. 2(b)(2); (2) furnishing of the information solicited is voluntary; and (3) the principal purpose for which the information is used by the U.S. Patent and Trademark Office is to process and/or examine your submission related to a patent application or patent. If you do not furnish the requested information, the U.S. Patent and Trademark Office may not be able to process and/or examine your submission, which may result in termination of proceedings or abandonment of the application or expiration of the patent.

The information provided by you in this form will be subject to the following routine uses:

1. The information on this form will be treated confidentially to the extent allowed under the Freedom of Information Act (5 U.S.C. 552) and the Privacy Act (5 U.S.C 552a). Records from this system of records may be disclosed to the Department of Justice to determine whether disclosure of these records is required by the Freedom of Information Act.
2. A record from this system of records may be disclosed, as a routine use, in the course of presenting evidence to a court, magistrate, or administrative tribunal, including disclosures to opposing counsel in the course of settlement negotiations.
3. A record in this system of records may be disclosed, as a routine use, to a Member of Congress submitting a request involving an individual, to whom the record pertains, when the individual has requested assistance from the Member with respect to the subject matter of the record.
4. A record in this system of records may be disclosed, as a routine use, to a contractor of the Agency having need for the information in order to perform a contract. Recipients of information shall be required to comply with the requirements of the Privacy Act of 1974, as amended, pursuant to 5 U.S.C. 552a(m).
5. A record related to an International Application filed under the Patent Cooperation Treaty in this system of records may be disclosed, as a routine use, to the International Bureau of the World Intellectual Property Organization, pursuant to the Patent Cooperation Treaty.
6. A record in this system of records may be disclosed, as a routine use, to another federal agency for purposes of National Security review (35 U.S.C. 181) and for review pursuant to the Atomic Energy Act (42 U.S.C. 218(c)).
7. A record from this system of records may be disclosed, as a routine use, to the Administrator, General Services, or his/her designee, during an inspection of records conducted by GSA as part of that agency's responsibility to recommend improvements in records management practices and programs, under authority of 44 U.S.C. 2904 and 2906. Such disclosure shall be made in accordance with the GSA regulations governing inspection of records for this purpose, and any other relevant (i.e., GSA or Commerce) directive. Such disclosure shall not be used to make determinations about individuals.
8. A record from this system of records may be disclosed, as a routine use, to the public after either publication of the application pursuant to 35 U.S.C. 122(b) or issuance of a patent pursuant to 35 U.S.C. 151. Further, a record may be disclosed, subject to the limitations of 37 CFR 1.14, as a routine use, to the public if the record was filed in an application which became abandoned or in which the proceedings were terminated and which application is referenced by either a published application, an application open to public inspection or an issued patent.
9. A record from this system of records may be disclosed, as a routine use, to a Federal, State, or local law enforcement agency, if the USPTO becomes aware of a violation or potential violation of law or regulation.

Notice of Allowability	Application No. 11/241,748	Applicant(s) MONK ET AL.	
	Examiner CAI CHEN	Art Unit 2425	AIA (First Inventor to File) Status No

-- The MAILING DATE of this communication appears on the cover sheet with the correspondence address--

All claims being allowable, PROSECUTION ON THE MERITS IS (OR REMAINS) CLOSED in this application. If not included herewith (or previously mailed), a Notice of Allowance (PTOL-85) or other appropriate communication will be mailed in due course. **THIS NOTICE OF ALLOWABILITY IS NOT A GRANT OF PATENT RIGHTS.** This application is subject to withdrawal from issue at the initiative of the Office or upon petition by the applicant. See 37 CFR 1.313 and MPEP 1308.

1. ☒ This communication is responsive to *04/12/2013*.
   ☐ A declaration(s)/affidavit(s) under **37 CFR 1.130(b)** was/were filed on_____.
2. ☐ An election was made by the applicant in response to a restriction requirement set forth during the interview on _____; the restriction requirement and election have been incorporated into this action.
3. ☒ The allowed claim(s) is/are *47-53*. As a result of the allowed claim(s), you may be eligible to benefit from the **Patent Prosecution Highway** program at a participating intellectual property office for the corresponding application. For more information, please see http://www.uspto.gov/patents/init_events/pph/index.jsp or send an inquiry to PPHfeedback@uspto.gov .
4. ☐ Acknowledgment is made of a claim for foreign priority under 35 U.S.C. § 119(a)-(d) or (f).

   Certified copies:

   a) ☐ All b) ☐ Some *c) ☐ None of the:
   1. ☐ Certified copies of the priority documents have been received.
   2. ☐ Certified copies of the priority documents have been received in Application No. _____ .
   3. ☐ Copies of the certified copies of the priority documents have been received in this national stage application from the International Bureau (PCT Rule 17.2(a)).

   * Certified copies not received: _____.

   Interim copies:

   a) ☐ All b) ☐ Some c) ☐ None of the: Interim copies of the priority documents have been received.

Applicant has THREE MONTHS FROM THE "MAILING DATE" of this communication to file a reply complying with the requirements noted below. Failure to timely comply will result in ABANDONMENT of this application.
THIS THREE-MONTH PERIOD IS NOT EXTENDABLE.

5. ☐ CORRECTED DRAWINGS (as "replacement sheets") must be submitted.
   ☐ including changes required by the attached Examiner's Amendment / Comment or in the Office action of Paper No./Mail Date _____.

   Identifying indicia such as the application number (see 37 CFR 1.84(c)) should be written on the drawings in the front (not the back) of each sheet. Replacement sheet(s) should be labeled as such in the header according to 37 CFR 1.121(d).
6. ☐ DEPOSIT OF and/or INFORMATION about the deposit of BIOLOGICAL MATERIAL must be submitted. Note the attached Examiner's comment regarding REQUIREMENT FOR THE DEPOSIT OF BIOLOGICAL MATERIAL.

Attachment(s)

1. ☒ Notice of References Cited (PTO-892)
2. ☐ Information Disclosure Statements (PTO/SB/08), Paper No./Mail Date _____
3. ☐ Examiner's Comment Regarding Requirement for Deposit of Biological Material
4. ☐ Interview Summary (PTO-413), Paper No./Mail Date _____ .
5. ☐ Examiner's Amendment/Comment
6. ☒ Examiner's Statement of Reasons for Allowance
7. ☐ Other _____.

/CAI CHEN/
Examiner, Art Unit 2425

DETAILED ACTION

Applicant's arguments, see applicant's remark, filed 04/12/2013, with respect to claim 47 using Draves as a prior art reference have been fully considered and are persuasive. The rejection of claims 47-53 of the previous office action has been withdrawn. After further considerations and searches by the examiner, claims 47-53 are founded to be allowable.

Allowable Subject Matter

Claims 47-53 are allowed.

The following is a statement of reasons for the indication of allowable subject matter:

Regarding claim 47 and its dependents, the art of record either alone or in combination fails to particular disclose or suggest the claim when considered as whole and particularly when a modem for communication to at least one node across at least one channel of a coaxial network, the modem comprising:

a transmitter; and a MAC layer in signal communication with the transmitter, the MAC layer using at least one probe packet as an echo profile probe to measure node delay spread on the network [wherein the claim limitation "the delay spread of the network" is interpreted as "the difference in the amount of delay encounter by difference components of the same signal due to the various frequencies that make up the signal used to communicate the echo probe" in light of applicant's specification] and the MAC layer optimizing the

preamble and cyclic prefix requirements or other parameters in response to the measured node delay spread on the network;

wherein the transmitter communicates the at least one transmit packet.

As to the art of record, the Bell reference discloses a network interface card using DMT modulation technique for communication. However, Bell does not teach with respect to the entire or combination claim limitation stated as above.

As to the art of record, the Draves reference discloses using applying two probe measure the delay between two nodes. However, Draves does not teach with respect to the entire or combination claim limitation stated as above.

As to the art of record, the Walton reference discloses the concept of applying OFDM method in the wireless communication. However, Walton does not teach with respect to the entire or combination claim limitation stated as above.

Conclusion

Any inquiry concerning this communication or earlier communications from the examiner should be directed to CAI CHEN whose telephone number is (571)270-5679. The examiner can normally be reached on 7:30 am to 4:30 pm.

If attempts to reach the examiner by telephone are unsuccessful, the examiner's supervisor, Brian Pendleton can be reached on 571-272-7527. The fax phone number for the organization where this application or proceeding is assigned is 571-273-8300.

Information regarding the status of an application may be obtained from the Patent Application Information Retrieval (PAIR) system. Status information for published applications may be obtained from either Private PAIR or Public PAIR. Status information for unpublished applications is available through Private PAIR only. For more information about the PAIR system, see http://pair-direct.uspto.gov. Should you have questions on access to the Private PAIR system, contact the Electronic Business Center (EBC) at 866-217-9197 (toll-free). If you would like assistance from a USPTO Customer Service Representative or access to the automated information system, call 800-786-9199 (IN USA OR CANADA) or 571-272-1000.

/CAI CHEN/
Examiner, Art Unit 2425

Notice of References Cited	Application/Control No. 11/241,748	Applicant(s)/Patent Under Reexamination MONK ET AL.	
	Examiner CAI CHEN	Art Unit 2425	Page 1 of 1

U.S. PATENT DOCUMENTS

*		Document Number Country Code-Number-Kind Code	Date MM-YYYY	Name	Classification
*	A	US-2005/0120097	06-2005	Walton et al.	709/220
*	B	US-6,052,380	04-2000	Bell, Russell W.	370/445
*	C	US-2005/0185632	08-2005	Draves et al.	370/351
	D	US-			
	E	US-			
	F	US-			
	G	US-			
	H	US-			
	I	US-			
	J	US-			
	K	US-			
	L	US-			
	M	US-			

FOREIGN PATENT DOCUMENTS

*		Document Number Country Code-Number-Kind Code	Date MM-YYYY	Country	Name	Classification
	N					
	O					
	P					
	Q					
	R					
	S					
	T					

NON-PATENT DOCUMENTS

*		Include as applicable: Author, Title Date, Publisher, Edition or Volume, Pertinent Pages)
	U	
	V	
	W	
	X	

*A copy of this reference is not being furnished with this Office action. (See MPEP § 707.05(a).)
Dates in MM-YYYY format are publication dates. Classifications may be US or foreign.

Search Notes	Application/Control No.	Applicant(s)/Patent Under Reexamination
	11241748	MONK ET AL.
	Examiner	**Art Unit**
	CAI CHEN	2425

CPC- SEARCHED

Symbol	Date	Examiner

CPC COMBINATION SETS - SEARCHED

Symbol	Date	Examiner

US CLASSIFICATION SEARCHED

Class	Subclass	Date	Examiner

SEARCH NOTES

Search Notes	Date	Examiner
Inventor Searches were performed in East	3/20/2009	cc
Class 725 and 370 are text searches	3/20/2009	cc
The searches are updated	2/15/2011	cc
Consult with Primary Examiner Jerry Dennison in 709	2/15/2011	cc
All searches are updated	7/19/2011	cc
All searches are updated	4/16/2012	cc
Consulted with 2425 SPE Brian Pendleton	5/30/2013	cc
All searches are updated	5/30/2013	cc

INTERFERENCE SEARCH

US Class/ CPC Symbol	US Subclass / CPC Group	Date	Examiner
725	111, 123, 126-127	5/30/2013	CC

/CAI CHEN/ Examiner.Art Unit 2425	

Index of Claims	Application/Control No.	Applicant(s)/Patent Under Reexamination
	11241748	MONK ET AL.
	Examiner	**Art Unit**
	CAI CHEN	2425

✓	Rejected	-	Cancelled	N	Non-Elected	A	Appeal
=	Allowed	÷	Restricted	I	Interference	O	Objected

☐ Claims renumbered in the same order as presented by applicant ☐ CPA ☐ T.D. ☐ R.1.47

CLAIM		DATE								
Final	Original	03/20/2009	09/05/2009	03/17/2010	09/22/2010	02/15/2011	07/19/2011	04/16/2012	10/02/2012	05/30/2013
	1	✓	✓	✓	✓	✓	✓	-	-	-
	2	✓	✓	✓	✓	✓	✓	-	-	-
	3	✓	✓	✓	✓	✓	✓	-	-	-
	4	✓	✓	✓	✓	✓	✓	-	-	-
	5	✓	✓	✓	✓	✓	✓	-	-	-
	6	✓	✓	✓	✓	✓	✓	-	-	-
	7	✓	✓	✓	✓	✓	✓	-	-	-
	8	✓	-	✓	✓	-	✓	-	-	-
	9	✓	✓	✓	✓	✓	✓	-	-	-
	10	✓	✓	✓	✓	✓	✓	-	-	-
	11	✓	✓	✓	✓	✓	✓	-	-	-
	12	✓	✓	✓	✓	✓	✓	-	-	-
	13	✓	✓	✓	✓	✓	✓	-	-	-
	14	✓	✓	✓	✓	✓	✓	-	-	-
	15	✓	✓	✓	✓	✓	✓	-	-	-
	16	✓	✓	✓	✓	✓	✓	-	-	-
	17	✓	✓	✓	✓	✓	✓	-	-	-
	18	✓	✓	✓	✓	✓	✓	-	-	-
	19	✓	✓	✓	✓	✓	✓	-	-	-
	20	✓	✓	✓	✓	✓	✓	-	-	-
	21	✓	✓	✓	✓	✓	✓	-	-	-
	22	✓	✓	✓	✓	✓	✓	-	-	-
	23	✓	✓	✓	✓	✓	✓	-	-	-
	24	✓	✓	✓	✓	✓	✓	-	-	-
	25	✓	✓	✓	✓	✓	✓	-	-	-
	26	✓	-	-	-	-	-	-	-	-
	27	✓	-	-	-	-	-	-	-	-
	28	✓	-	-	-	-	-	-	-	-
	29	✓	-	-	-	-	-	-	-	-
	30	✓	-	-	-	-	-	-	-	-
	31	✓	-	-	-	-	-	-	-	-
	32	✓	-	-	-	-	-	-	-	-
	33	✓	-	-	-	-	-	-	-	-
	34	✓	-	-	-	-	-	-	-	-
	35	✓	-	-	-	-	-	-	-	-
	36	✓	-	-	-	-	-	-	-	-

Index of Claims	Application/Control No.	Applicant(s)/Patent Under Reexamination
	11241748	MONK ET AL.
	Examiner	**Art Unit**
	CAI CHEN	2425

✓	Rejected	-	Cancelled	N	Non-Elected	A	Appeal
=	Allowed	÷	Restricted	I	Interference	O	Objected

☐ Claims renumbered in the same order as presented by applicant ☐ CPA ☐ T.D. ☐ R.1.47

CLAIM		DATE								
Final	Original	03/20/2009	09/05/2009	03/17/2010	09/22/2010	02/15/2011	07/19/2011	04/16/2012	10/02/2012	05/30/2013
	37	✓	-	-	-	-	-	-	-	-
	38	✓	-	-	-	-	-	-	-	-
	39	✓	-	-	-	-	-	-	-	-
	40	✓	-	-	-	-	-	-	-	-
	41	✓	-	-	-	-	-	-	-	-
	42	✓	-	-	-	-	-	-	-	-
	43	✓	-	-	-	-	-	-	-	-
	44	✓	-	-	-	-	-	-	-	-
	45	✓	-	-	-	-	-	-	-	-
	46			✓	✓	✓	-	-	-	-
1	47			✓	✓	✓	✓	✓	✓	✓
2	48								✓	✓
3	49								✓	✓
4	50								✓	✓
5	51								✓	✓
6	52								✓	✓
7	53								✓	✓

EAST Search History

EAST Search History (Prior Art)

Ref #	Hits	Search Query	DBs	Default Operator	Plurals	Time Stamp
L2	3438	error vector measur$5 or evm	US-PGPUB; USPAT; USOCR; FPRS; EPO; JPO; DERWENT; IBM_TDB	ADJ	OFF	2013/05/30 13:53
L3	339	L2 and frequency response	US-PGPUB; USPAT; USOCR; FPRS; EPO; JPO; DERWENT; IBM_TDB	ADJ	ON	2013/05/30 13:53
L4	68	L3 and optimization	US-PGPUB; USPAT; USOCR; FPRS; EPO; JPO; DERWENT; IBM_TDB	ADJ	ON	2013/05/30 13:53
L5	7	probe with node delay$3	US-PGPUB; USPAT; USOCR; FPRS; EPO; JPO; DERWENT; IBM_TDB	ADJ	ON	2013/05/30 13:53
L6	48	probe packet with mac	US-PGPUB; USPAT; USOCR; FPRS; EPO; JPO; DERWENT; IBM_TDB	ADJ	ON	2013/05/30 13:53
L7	1255	delay spread with ofdm	US-PGPUB; USPAT; USOCR; FPRS; EPO; JPO; DERWENT; IBM_TDB	ADJ	ON	2013/05/30 13:53
L8	400	delay spread with ofdm with (cyclic prefix or preamble)	US-PGPUB; USPAT; USOCR; FPRS; EPO; JPO; DERWENT; IBM_TDB	ADJ	ON	2013/05/30 13:54
L9	94	(delay spread with ofdm with (cyclic prefix)) and preamble	US-PGPUB; USPAT; USOCR; FPRS; EPO; JPO; DERWENT; IBM_TDB	ADJ	ON	2013/05/30 13:55
L10	1498	725/111,123,126-127.ccls.	US-PGPUB; USPAT; USOCR; FPRS; EPO; JPO; DERWENT; IBM_TDB	ADJ	ON	2013/05/30 13:58
L11	0	9 and 10	US-PGPUB; USPAT; USOCR; FPRS; EPO; JPO; DERWENT; IBM_TDB	ADJ	ON	2013/05/30 13:58
L12	0	8 and 10	US-PGPUB; USPAT; USOCR; FPRS; EPO; JPO; DERWENT; IBM_TDB	ADJ	ON	2013/05/30 13:58
L13	1	7 and 10	US-PGPUB; USPAT; USOCR; FPRS; EPO; JPO; DERWENT; IBM_TDB	ADJ	ON	2013/05/30 13:58
L14	0	3 and 10	US-PGPUB; USPAT; USOCR; FPRS; EPO; JPO; DERWENT; IBM_TDB	ADJ	ON	2013/05/30 13:58

EAST Search History (Interference)

Ref #	Hits	Search Query	DBs	Default Operator	Plurals	Time Stamp
L15	17	probe packet with mac	USPAT; UPAD	ADJ	ON	2013/05/30 13:59
L16	32	(delay spread with ofdm with (cyclic	USPAT;	ADJ	ON	2013/05/30

		prefix)) and preamble	UPAD			13:59
L17	0	725/111,123,126-127.ccls. and 15	USPAT; UPAD	ADJ	ON	2013/05/30 13:59
L18	252	725/111,123,126-127.ccls. and "116"	USPAT; UPAD	ADJ	ON	2013/05/30 13:59
L19	0	725/111,123,126-127.ccls. and 16	USPAT; UPAD	ADJ	ON	2013/05/30 13:59

5/30/2013 2:06:52 PM
C:\Users\cchen3\Documents\EAST\Workspaces\11241748 physical layer transmitter.wsp

Issue Classification	Application/Control No.	Applicant(s)/Patent Under Reexamination
	11241748	MONK ET AL.
	Examiner	Art Unit
	CAI CHEN	2425

CPC		
Symbol	Type	Version
/		
/		
/		
/		
/		
/		
/		
/		
/		
/		
/		
/		
/		
/		
/		

CPC Combination Sets				
Symbol	Type	Set	Ranking	Version
/				
/				

US ORIGINAL CLASSIFICATION		INTERNATIONAL CLASSIFICATION									
CLASS	SUBCLASS	CLAIMED					NON-CLAIMED				
725	111	H	0	4	N	7 / 173 (2011.01.01)					

CROSS REFERENCE(S)					
CLASS	SUBCLASS (ONE SUBCLASS PER BLOCK)				
725	123	126	127		

/CAI CHEN/ Examiner.Art Unit 2425 (Assistant Examiner)	(Date)	**Total Claims Allowed:** 7	
/CAI CHEN/ Examiner.Art Unit 2425 (Primary Examiner)	05/30/2013 (Date)	O.G. Print Claim(s) 1	O.G. Print Figure 1

U.S. Patent and Trademark Office — Part of Paper No. 20130530

Issue Classification	Application/Control No.	Applicant(s)/Patent Under Reexamination
	11241748	MONK ET AL.
	Examiner	**Art Unit**
	CAI CHEN	2425

/CAI CHEN/ Examiner.Art Unit 2425 (Assistant Examiner)	(Date)	**Total Claims Allowed:** 7	
/CAI CHEN/ Examiner.Art Unit 2425 (Primary Examiner)	05/30/2013 (Date)	O.G. Print Claim(s) 1	O.G. Print Figure 1

U.S. Patent and Trademark Office

Part of Paper No. 20130530

Issue Classification	Application/Control No.	Applicant(s)/Patent Under Reexamination
	11241748	MONK ET AL.
	Examiner	**Art Unit**
	CAI CHEN	2425

☐ Claims renumbered in the same order as presented by applicant ☐ CPA ☐ T.D. ☐ R.1.47

Final	Original	Final	Original	Final	Original	Final	Original	Final	Original	Final	Original	Final	Original	Final	Original
	1		17		33	3	49								
	2		18		34	4	50								
	3		19		35	5	51								
	4		20		36	6	52								
	5		21		37	7	53								
	6		22		38										
	7		23		39										
	8		24		40										
	9		25		41										
	10		26		42										
	11		27		43										
	12		28		44										
	13		29		45										
	14		30		46										
	15		31	1	47										
	16		32	2	48										

/CAI CHEN/ Examiner.Art Unit 2425 (Assistant Examiner)	(Date)	**Total Claims Allowed:** 7	
/CAI CHEN/ Examiner.Art Unit 2425 (Primary Examiner)	05/30/2013 (Date)	O.G. Print Claim(s) 1	O.G. Print Figure 1

U.S. Patent and Trademark Office

Part of Paper No. 20130530

PART B - FEE(S) TRANSMITTAL

Complete and send this form, together with applicable fee(s), to: Mail **Mail Stop ISSUE FEE**
Commissioner for Patents
P.O. Box 1450
Alexandria, Virginia 22313-1450
or Fax (571)-273-2885

INSTRUCTIONS: This form should be used for transmitting the ISSUE FEE and PUBLICATION FEE (if required). Blocks 1 through 5 should be completed where appropriate. All further correspondence including the Patent, advance orders and notification of maintenance fees will be mailed to the current correspondence address as indicated unless corrected below or directed otherwise in Block 1, by (a) specifying a new correspondence address; and/or (b) indicating a separate "FEE ADDRESS" for maintenance fee notifications.

CURRENT CORRESPONDENCE ADDRESS (Note: Use Block 1 for any change of address)

77561 7590 05/31/2013
Duane Morris LLP (Entropic)
IP Department
30 South 17th Street
Philadelphia, PA 19103-4196

Note: A certificate of mailing can only be used for domestic mailings of the Fee(s) Transmittal. This certificate cannot be used for any other accompanying papers. Each additional paper, such as an assignment or formal drawing, must have its own certificate of mailing or transmission.

Certificate of Mailing or Transmission Via EFS-Web
I hereby certify that this Fee(s) Transmittal is being deposited with the United States Postal Service with sufficient postage for first class mail in an envelope addressed to the Mail Stop ISSUE FEE address above, or being facsimile transmitted to the USPTO (571) 273-2885, on the date indicated below.

Tara Sallee	(Depositor's name)
/Tara Sallee/	(Signature)
June 25, 2013	(Date)

APPLICATION NO.	FILING DATE	FIRST NAMED INVENTOR	ATTORNEY DOCKET NO.	CONFIRMATION NO.
11/241,748	09/29/2005	Anton Monk	E5982-00562 (E040004USU2)	2829

TITLE OF INVENTION: PHYSICAL LAYER TRANSMITTER FOR USE IN A BROADBAND LOCAL AREA NETWORK

APPLN. TYPE	ENTITY STATUS	ISSUE FEE DUE	PUBLICATION FEE DUE	PREV. PAID ISSUE FEE	TOTAL FEE(S) DUE	DATE DUE
nonprovisional	UNDISCOUNTED	$1780	$0	$0	$1780	09/03/2013

EXAMINER	ART UNIT	CLASS-SUBCLASS
CHEN, CAI Y	2425	725-111000

1. Change of correspondence address or indication of "Fee Address" (37 CFR 1.363).
- [x] Change of correspondence address (or Change of Correspondence Address form PTO/SB/122) attached.
- [x] "Fee Address" indication (or "Fee Address" Indication form PTO/SB/47; Rev 03-02 or more recent) attached. **Use of a Customer Number is required.**

2. For printing on the patent front page, list
(1) the names of up to 3 registered patent attorneys or agents OR, alternatively,
(2) the name of a single firm (having as a member a registered attorney or agent) and the names of up to 2 registered patent attorneys or agents. If no name is listed, no name will be printed.

1 Bruce Greenhaus
2 Richard Bachand
3 Duane Morris LLP

3. ASSIGNEE NAME AND RESIDENCE DATA TO BE PRINTED ON THE PATENT (print or type)

PLEASE NOTE: Unless an assignee is identified below, no assignee data will appear on the patent. If an assignee is identified below, the document has been filed for recordation as set forth in 37 CFR 3.11. Completion of this form is NOT a substitute for filing an assignment.

(A) NAME OF ASSIGNEE: Entropic Communications, Inc.
(B) RESIDENCE: (CITY and STATE OR COUNTRY): San Diego, CA

Please check the appropriate assignee category or categories (will not be printed on the patent) : ☐ Individual ☒ Corporation or other private group entity ☐ Government

4a. The following fee(s) are submitted:
- [x] Issue Fee
- [ ] Publication Fee (No small entity discount permitted)
- [ ] Advance Order - # of Copies _____

4b. Payment of Fee(s): (**Please first reapply any previously paid issue fee shown above**)
- [ ] A check is enclosed.
- [x] Payment by Deposit Account Number 504613.
- [x] The Director is hereby authorized to charge the required fee(s), any deficiency, or credit any overpayment, to Deposit Account Number 504613 (enclose an extra copy of this form).

5. **Change in Entity Status** (from status indicated above)

❑ Applicant certifying micro entity status. See 37 CFR 1.29	NOTE: Absent a valid certification of Micro Entity Status (see form PTO/SB/15A and 15B), issue fee payment in the micro entity amount will not be accepted at the risk of application abandonment.
❑ Applicant asserting small entity status. See 37 CFR 1.27	NOTE: If the application was previously under micro entity status, checking this box will be taken to be a notification of loss of entitlement to micro entity status.
❑ Applicant changing to regular undiscounted fee status.	NOTE: Checking this box will be taken to be a notification of loss of entitlement to small or micro entity status, as applicable.

NOTE: The Issue Fee and Publication Fee (if required) will not be accepted from anyone other than the applicant; a registered attorney or agent; or the assignee or other party in interest as shown by the records of the United States Patent and Trademark Office.

Authorized Signature /Richard Andre Bachand/ Date June 25, 2013

Typed or printed name Richard A. Bachand Registration No. 25,107

This collection of information is required by 37 CFR 1.311. The information is required to obtain or retain a benefit by the public which is to file (and by the USPTO to process) an application. Confidentiality is governed by 35 U.S.C. 122 and 37 CFR 1.14. This collection is estimated to take 12 minutes to complete, including gathering, preparing, and submitting the completed application form to the USPTO. Time will vary depending upon the individual case. Any comments on the amount of time you require to complete this form and/or suggestions for reducing this burden, should be sent to the Chief Information Officer, U.S. Patent and Trademark Office, U.S. Department of Commerce, P.O. Box 1450, Alexandria, Virginia 22313-1450. DO NOT SEND FEES OR COMPLETED FORMS TO THIS ADDRESS. SEND TO: Commissioner for Patents, P.O. Box 1450, Alexandria, Virginia 22313-1450.

Under the Paperwork Reduction Act of 1995, no persons are required to respond to a collection of information unless it displays a valid OMB control number.

PTO/SB/122 (11-08)
Approved for use through 11/30/2011. OMB 0651-0035
U.S. Patent and Trademark Office; U.S. DEPARTMENT OF COMMERCE
Under the Paperwork Reduction Act of 1995, no persons are required to respond to a collection of information unless it displays a valid OMB control number.

CHANGE OF CORRESPONDENCE ADDRESS
Application

Address to:
Commissioner for Patents
P.O. Box 1450
Alexandria, VA 22313-1450

Application Number	11/241,748
Filing Date	9/29/2005
First Named Inventor	Anton Monk
Art Unit	2425
Examiner Name	CHEN, CAI Y
Attorney Docket Number	E040004USU2

Please change the Correspondence Address for the above-identified patent application to:

☑ The address associated with Customer Number: 77330

OR

☐ Firm or Individual Name

Address

City | State | Zip

Country

Telephone | Email

This form cannot be used to change the data associated with a Customer Number. To change the data associated with an existing Customer Number use "Request for Customer Number Data Change" (PTO/SB/124).

I am the:

☐ Applicant/Inventor

☐ Assignee of record of the entire interest.
Statement under 37 CFR 3.73(b) is enclosed. (Form PTO/SB/96).

☑ Attorney or agent of record. Registration Number 25,107.

☐ Registered practitioner named in the application transmittal letter in an application without an executed oath or declaration. See 37 CFR 1.33(a)(1). Registration Number_____.

Signature /Richard Andre Bachand/

Typed or Printed Name Richard A. Bachand

Date June 25, 2013 | Telephone (858) 768-3835

NOTE: Signatures of all the inventors or assignees of record of the entire interest or their representative(s) are required. Submit multiple forms if more than one signature is required, see below*.

☑ *Total of 4 forms are submitted.

This collection of information is required by 37 CFR 1.33. The information is required to obtain or retain a benefit by the public which is to file (and by the USPTO to process) an application. Confidentiality is governed by 35 U.S.C. 122 and 37 CFR 1.11 and 1.14. This collection is estimated to take 3 minutes to complete, including gathering, preparing, and submitting the completed application form to the USPTO. Time will vary depending upon the individual case. Any comments on the amount of time you require to complete this form and/or suggestions for reducing this burden, should be sent to the Chief Information Officer, U.S. Patent and Trademark Office, U.S. Department of Commerce, P.O. Box 1450, Alexandria, VA 22313-1450. DO NOT SEND FEES OR COMPLETED FORMS TO THIS ADDRESS. **SEND TO: Commissioner for Patents, P.O. Box 1450, Alexandria, VA 22313-1450.**

If you need assistance in completing the form, call 1-800-PTO-9199 and select option 2.

Privacy Act Statement

The **Privacy Act of 1974 (P.L. 93-579)** requires that you be given certain information in connection with your submission of the attached form related to a patent application or patent. Accordingly, pursuant to the requirements of the Act, please be advised that: (1) the general authority for the collection of this information is 35 U.S.C. 2(b)(2); (2) furnishing of the information solicited is voluntary; and (3) the principal purpose for which the information is used by the U.S. Patent and Trademark Office is to process and/or examine your submission related to a patent application or patent. If you do not furnish the requested information, the U.S. Patent and Trademark Office may not be able to process and/or examine your submission, which may result in termination of proceedings or abandonment of the application or expiration of the patent.

The information provided by you in this form will be subject to the following routine uses:

1. The information on this form will be treated confidentially to the extent allowed under the Freedom of Information Act (5 U.S.C. 552) and the Privacy Act (5 U.S.C 552a). Records from this system of records may be disclosed to the Department of Justice to determine whether disclosure of these records is required by the Freedom of Information Act.
2. A record from this system of records may be disclosed, as a routine use, in the course of presenting evidence to a court, magistrate, or administrative tribunal, including disclosures to opposing counsel in the course of settlement negotiations.
3. A record in this system of records may be disclosed, as a routine use, to a Member of Congress submitting a request involving an individual, to whom the record pertains, when the individual has requested assistance from the Member with respect to the subject matter of the record.
4. A record in this system of records may be disclosed, as a routine use, to a contractor of the Agency having need for the information in order to perform a contract. Recipients of information shall be required to comply with the requirements of the Privacy Act of 1974, as amended, pursuant to 5 U.S.C. 552a(m).
5. A record related to an International Application filed under the Patent Cooperation Treaty in this system of records may be disclosed, as a routine use, to the International Bureau of the World Intellectual Property Organization, pursuant to the Patent Cooperation Treaty.
6. A record in this system of records may be disclosed, as a routine use, to another federal agency for purposes of National Security review (35 U.S.C. 181) and for review pursuant to the Atomic Energy Act (42 U.S.C. 218(c)).
7. A record from this system of records may be disclosed, as a routine use, to the Administrator, General Services, or his/her designee, during an inspection of records conducted by GSA as part of that agency's responsibility to recommend improvements in records management practices and programs, under authority of 44 U.S.C. 2904 and 2906. Such disclosure shall be made in accordance with the GSA regulations governing inspection of records for this purpose, and any other relevant (*i.e.*, GSA or Commerce) directive. Such disclosure shall not be used to make determinations about individuals.
8. A record from this system of records may be disclosed, as a routine use, to the public after either publication of the application pursuant to 35 U.S.C. 122(b) or issuance of a patent pursuant to 35 U.S.C. 151. Further, a record may be disclosed, subject to the limitations of 37 CFR 1.14, as a routine use, to the public if the record was filed in an application which became abandoned or in which the proceedings were terminated and which application is referenced by either a published application, an application open to public inspection or an issued patent.
9. A record from this system of records may be disclosed, as a routine use, to a Federal, State, or local law enforcement agency, if the USPTO becomes aware of a violation or potential violation of law or regulation.

Electronic Patent Application Fee Transmittal

Application Number:	11241748
Filing Date:	29-Sep-2005
Title of Invention:	PHYSICAL LAYER TRANSMITTER FOR USE IN A BROADBAND LOCAL AREA NETWORK
First Named Inventor/Applicant Name:	Anton Monk
Filer:	Richard A. Bachand/Tara Sallee
Attorney Docket Number:	E040004USU2

Filed as Large Entity

Utility under 35 USC 111(a) Filing Fees

Description	Fee Code	Quantity	Amount	Sub-Total in USD($)
Basic Filing:				
Pages:				
Claims:				
Miscellaneous-Filing:				
Petition:				
Patent-Appeals-and-Interference:				
Post-Allowance-and-Post-Issuance:				
Utility Appl Issue Fee	1501	1	1780	1780
Extension-of-Time:				

Description	Fee Code	Quantity	Amount	Sub-Total in USD($)
Miscellaneous:				
Submission- Information Disclosure Stmt	1806	1	180	180
		Total in USD ($)		**1960**

Electronic Acknowledgement Receipt	
EFS ID:	16152843
Application Number:	11241748
International Application Number:	
Confirmation Number:	2829
Title of Invention:	PHYSICAL LAYER TRANSMITTER FOR USE IN A BROADBAND LOCAL AREA NETWORK
First Named Inventor/Applicant Name:	Anton Monk
Customer Number:	77561
Filer:	Richard A. Bachand/Tara Sallee
Filer Authorized By:	Richard A. Bachand
Attorney Docket Number:	E040004USU2
Receipt Date:	25-JUN-2013
Filing Date:	29-SEP-2005
Time Stamp:	19:14:52
Application Type:	Utility under 35 USC 111(a)

Payment information:

Submitted with Payment	yes
Payment Type	Deposit Account
Payment was successfully received in RAM	$1960
RAM confirmation Number	6790
Deposit Account	504613
Authorized User	
The Director of the USPTO is hereby authorized to charge indicated fees and credit any overpayment as follows: Charge any Additional Fees required under 37 C.F.R. Section 1.20 (Post Issuance fees) Charge any Additional Fees required under 37 C.F.R. Section 1.21 (Miscellaneous fees and charges)	

File Listing:

Document Number	Document Description	File Name	File Size(Bytes)/ Message Digest	Multi Part /.zip	Pages (if appl.)
1	Issue Fee Payment (PTO-85B)	2013-06-25_Issue_Fee_Payment_E040004USU2.pdf	110013 4514f259cd04260eceb874f6e90b27cef7be9709	no	2
Warnings:					
Information:					
2	Information Disclosure Statement (IDS) Form (SB08)	2013-06-25_IDS_E040004USU2.pdf	792230 9c86a7cec7610e66de1fc605c59ff18d62bd9777	no	4
Warnings:					
Information:					
3	Miscellaneous Incoming Letter	2013-06-25_Fee_Address_Form_E040004USU2.pdf	221235 f3a616c848ac15d3d294f29b76bce31f350ff9cc	no	2
Warnings:					
Information:					
4	Change of Address	2013-06-25_Change_of_Correspondence_E040004USU2.pdf	270678 c832ce13f85ec8d2a5f8026798bc44aabf18f962	no	2
Warnings:					
Information:					
5	Fee Worksheet (SB06)	fee-info.pdf	32266 856ebfab3a6e845b61d7ee763dd591ca18216b4d	no	2
Warnings:					
Information:					
		Total Files Size (in bytes):	1426422		

This Acknowledgement Receipt evidences receipt on the noted date by the USPTO of the indicated documents, characterized by the applicant, and including page counts, where applicable. It serves as evidence of receipt similar to a Post Card, as described in MPEP 503.

<u>New Applications Under 35 U.S.C. 111</u>
If a new application is being filed and the application includes the necessary components for a filing date (see 37 CFR 1.53(b)-(d) and MPEP 506), a Filing Receipt (37 CFR 1.54) will be issued in due course and the date shown on this Acknowledgement Receipt will establish the filing date of the application.

<u>National Stage of an International Application under 35 U.S.C. 371</u>
If a timely submission to enter the national stage of an international application is compliant with the conditions of 35 U.S.C. 371 and other applicable requirements a Form PCT/DO/EO/903 indicating acceptance of the application as a national stage submission under 35 U.S.C. 371 will be issued in addition to the Filing Receipt, in due course.

<u>New International Application Filed with the USPTO as a Receiving Office</u>
If a new international application is being filed and the international application includes the necessary components for an international filing date (see PCT Article 11 and MPEP 1810), a Notification of the International Application Number and of the International Filing Date (Form PCT/RO/105) will be issued in due course, subject to prescriptions concerning national security, and the date shown on this Acknowledgement Receipt will establish the international filing date of the application.

PTO/SB/08a (01-10)
Approved for use through 07/31/2012. OMB 0651-0031
U.S. Patent and Trademark Office; U.S. DEPARTMENT OF COMMERCE
Under the Paperwork Reduction Act of 1995, no persons are required to respond to a collection of information unless it contains a valid OMB control number.

INFORMATION DISCLOSURE STATEMENT BY APPLICANT

(Not for submission under 37 CFR 1.99)

Application Number	11241748
Filing Date	2005-09-29
First Named Inventor	Anton Monk
Art Unit	2425
Examiner Name	CHEN, CAI Y
Attorney Docket Number	E040004USU2

U.S.PATENTS Remove

Examiner Initial*	Cite No	Patent Number	Kind Code[1]	Issue Date	Name of Patentee or Applicant of cited Document	Pages,Columns,Lines where Relevant Passages or Relevant Figures Appear
	1	6481013	B1	2002-11-12	Dinwiddie et al.	
	2	6052380		2000-04-18	Bell	

If you wish to add additional U.S. Patent citation information please click the Add button. Add

U.S.PATENT APPLICATION PUBLICATIONS Remove

Examiner Initial*	Cite No	Publication Number	Kind Code[1]	Publication Date	Name of Patentee or Applicant of cited Document	Pages,Columns,Lines where Relevant Passages or Relevant Figures Appear
	1	20020149705	A1	2002-10-17	Allen et al.	
	2	20090217325	A1	2009-08-27	Kliger et al.	
	3	20030091067	A1	2003-05-15	Emerson et al.	
	4	20060221819	A1	2006-10-05	Padwekar	

If you wish to add additional U.S. Published Application citation information please click the Add button. Add

FOREIGN PATENT DOCUMENTS Remove

INFORMATION DISCLOSURE STATEMENT BY APPLICANT (Not for submission under 37 CFR 1.99)	Application Number	11241748
	Filing Date	2005-09-29
	First Named Inventor	Anton Monk
	Art Unit	2425
	Examiner Name	CHEN, CAI Y
	Attorney Docket Number	E040004USU2

Examiner Initial*	Cite No	Foreign Document Number[3]	Country Code[2] ¡	Kind Code[4]	Publication Date	Name of Patentee or Applicant of cited Document	Pages,Columns,Lines where Relevant Passages or Relevant Figures Appear	T[5]
	1							☐

If you wish to add additional Foreign Patent Document citation information please click the Add button Add

NON-PATENT LITERATURE DOCUMENTS Remove

Examiner Initials*	Cite No	Include name of the author (in CAPITAL LETTERS), title of the article (when appropriate), title of the item (book, magazine, journal, serial, symposium, catalog, etc), date, pages(s), volume-issue number(s), publisher, city and/or country where published.	T[5]
	1		☐

If you wish to add additional non-patent literature document citation information please click the Add button Add

EXAMINER SIGNATURE

Examiner Signature		Date Considered	

*EXAMINER: Initial if reference considered, whether or not citation is in conformance with MPEP 609. Draw line through a citation if not in conformance and not considered. Include copy of this form with next communication to applicant.

[1] See Kind Codes of USPTO Patent Documents at www.USPTO.GOV or MPEP 901.04. [2] Enter office that issued the document, by the two-letter code (WIPO Standard ST.3). [3] For Japanese patent documents, the indication of the year of the reign of the Emperor must precede the serial number of the patent document. [4] Kind of document by the appropriate symbols as indicated on the document under WIPO Standard ST.16 if possible. [5] Applicant is to place a check mark here if English language translation is attached.

INFORMATION DISCLOSURE STATEMENT BY APPLICANT (Not for submission under 37 CFR 1.99)	Application Number	11241748
	Filing Date	2005-09-29
	First Named Inventor	Anton Monk
	Art Unit	2425
	Examiner Name	CHEN, CAI Y
	Attorney Docket Number	E040004USU2

CERTIFICATION STATEMENT

Please see 37 CFR 1.97 and 1.98 to make the appropriate selection(s):

☐ That each item of information contained in the information disclosure statement was first cited in any communication from a foreign patent office in a counterpart foreign application not more than three months prior to the filing of the information disclosure statement. See 37 CFR 1.97(e)(1).

OR

☒ That no item of information contained in the information disclosure statement was cited in a communication from a foreign patent office in a counterpart foreign application, and, to the knowledge of the person signing the certification after making reasonable inquiry, no item of information contained in the information disclosure statement was known to any individual designated in 37 CFR 1.56(c) more than three months prior to the filing of the information disclosure statement. See 37 CFR 1.97(e)(2).

☐ See attached certification statement.

☒ The fee set forth in 37 CFR 1.17 (p) has been submitted herewith.

☐ A certification statement is not submitted herewith.

SIGNATURE

A signature of the applicant or representative is required in accordance with CFR 1.33, 10.18. Please see CFR 1.4(d) for the form of the signature.

Signature	/Richard Andre Bachand/	Date (YYYY-MM-DD)	2013-06-25
Name/Print	Richard A. Bachand	Registration Number	25,107

This collection of information is required by 37 CFR 1.97 and 1.98. The information is required to obtain or retain a benefit by the public which is to file (and by the USPTO to process) an application. Confidentiality is governed by 35 U.S.C. 122 and 37 CFR 1.14. This collection is estimated to take 1 hour to complete, including gathering, preparing and submitting the completed application form to the USPTO. Time will vary depending upon the individual case. Any comments on the amount of time you require to complete this form and/or suggestions for reducing this burden, should be sent to the Chief Information Officer, U.S. Patent and Trademark Office, U.S. Department of Commerce, P.O. Box 1450, Alexandria, VA 22313-1450. DO NOT SEND FEES OR COMPLETED FORMS TO THIS ADDRESS. **SEND TO: Commissioner for Patents, P.O. Box 1450, Alexandria, VA 22313-1450.**

Privacy Act Statement

The Privacy Act of 1974 (P.L. 93-579) requires that you be given certain information in connection with your submission of the attached form related to a patent application or patent. Accordingly, pursuant to the requirements of the Act, please be advised that: (1) the general authority for the collection of this information is 35 U.S.C. 2(b)(2); (2) furnishing of the information solicited is voluntary; and (3) the principal purpose for which the information is used by the U.S. Patent and Trademark Office is to process and/or examine your submission related to a patent application or patent. If you do not furnish the requested information, the U.S. Patent and Trademark Office may not be able to process and/or examine your submission, which may result in termination of proceedings or abandonment of the application or expiration of the patent.

The information provided by you in this form will be subject to the following routine uses:

1. The information on this form will be treated confidentially to the extent allowed under the Freedom of Information Act (5 U.S.C. 552) and the Privacy Act (5 U.S.C. 552a). Records from this system of records may be disclosed to the Department of Justice to determine whether the Freedom of Information Act requires disclosure of these record s.

2. A record from this system of records may be disclosed, as a routine use, in the course of presenting evidence to a court, magistrate, or administrative tribunal, including disclosures to opposing counsel in the course of settlement negotiations.

3. A record in this system of records may be disclosed, as a routine use, to a Member of Congress submitting a request involving an individual, to whom the record pertains, when the individual has requested assistance from the Member with respect to the subject matter of the record.

4. A record in this system of records may be disclosed, as a routine use, to a contractor of the Agency having need for the information in order to perform a contract. Recipients of information shall be required to comply with the requirements of the Privacy Act of 1974, as amended, pursuant to 5 U.S.C. 552a(m).

5. A record related to an International Application filed under the Patent Cooperation Treaty in this system of records may be disclosed, as a routine use, to the International Bureau of the World Intellectual Property Organization, pursuant to the Patent Cooperation Treaty.

6. A record in this system of records may be disclosed, as a routine use, to another federal agency for purposes of National Security review (35 U.S.C. 181) and for review pursuant to the Atomic Energy Act (42 U.S.C. 218(c)).

7. A record from this system of records may be disclosed, as a routine use, to the Administrator, General Services, or his/her designee, during an inspection of records conducted by GSA as part of that agency's responsibility to recommend improvements in records management practices and programs, under authority of 44 U.S.C. 2904 and 2906. Such disclosure shall be made in accordance with the GSA regulations governing inspection of records for this purpose, and any other relevant (i.e., GSA or Commerce) directive. Such disclosure shall not be used to make determinations about individuals.

8. A record from this system of records may be disclosed, as a routine use, to the public after either publication of the application pursuant to 35 U.S.C. 122(b) or issuance of a patent pursuant to 35 U.S.C. 151. Further, a record may be disclosed, subject to the limitations of 37 CFR 1.14, as a routine use, to the public if the record was filed in an application which became abandoned or in which the proceedings were terminated and which application is referenced by either a published application, an application open to public inspections or an issued patent.

9. A record from this system of records may be disclosed, as a routine use, to a Federal, State, or local law enforcement agency, if the USPTO becomes aware of a violation or potential violation of law or regulation.

PTO/SB/47 (03-09)
Approved for use through 05/31/2015. OMB 0651-0016
U.S. Patent and Trademark Office; U. S. DEPARTMENT OF COMMERCE
Under the Paperwork Reduction Act of 1995, no persons are required to respond to a collection of information unless it displays a valid OMB control number.

"FEE ADDRESS" INDICATION FORM

Address to:
Mail Stop M Correspondence
Commissioner for Patents
P.O. Box 1450
Alexandria, VA 22313-1450

- OR -

Fax to:
571-273-6500

INSTRUCTIONS: The issue fee must have been paid for application(s) listed on this form. In addition, only an address represented by a Customer Number can be established as the fee address for maintenance fee purposes (hereafter, fee address). A fee address should be established when correspondence related to maintenance fees should be mailed to a different address than the correspondence address for the application. **When to check the first box below**: If you have a Customer Number to represent the fee address. **When to check the second box below**: If you have no Customer Number representing the desired fee address, in which case a completed Request for Customer Number (PTO/SB/125) must be attached to this form. For more information on Customer Numbers, see the Manual of Patent Examining Procedure (MPEP) § 403.

For the following listed application(s), please recognize as the "Fee Address" under the provisions of 37 CFR 1.363 the address associated with:

☑ Customer Number: 77330

OR

☐ The attached Request for Customer Number (PTO/SB/125) form.

PATENT NUMBER (if known)	APPLICATION NUMBER
	11/241,748

Completed by (check one):

☐ Applicant/Inventor

/Richard Andre Bachand/
Signature

☑ Attorney or Agent of record 25,107
(Reg. No.)

Richard A. Bachand
Typed or printed name

☐ Assignee of record of the entire interest. See 37 CFR 3.71. Statement under 37 CFR 3.73(b) is enclosed. (Form PTO/SB/96)

(858) 768-3835
Requester's telephone number

☐ Assignee recorded at Reel _____ Frame_____

June 25, 2013
Date

NOTE: Signatures of all the inventors or assignees of record of the entire interest or their representative(s) are required. Submit multiple forms if more that one signature is required, see below*.

☑ *** Total of** 2 **forms are submitted.**

This collection of information is required by 37 CFR 1.363. The information is required to obtain or retain a benefit by the public which is to file (and by the USPTO to process) an application. Confidentiality is governed by 35 U.S.C. 122 and 37 CFR 1. 11 and 1.14. This collection is estimated to take 5 minutes to complete, including gathering, preparing, and submitting the completed application form to the USPTO. Time will vary depending upon the individual case. Any comments on the amount of time you require to complete this form and/or suggestions for reducing this burden, should be sent to the Chief Information Officer, U.S. Patent and Trademark Office, U.S. Department of Commerce, P.O. Box 1450, Alexandria, VA 22313- 1450. DO NOT SEND COMPLETED FORMS TO THIS ADDRESS.
SEND TO: Mail Stop M Correspondence, Commissioner for Patents, P.O. Box 1450, Alexandria, VA 22313-1450.
If you need assistance in completing the form, call 1-800-PTO-9199 and select option 2.

Privacy Act Statement

The **Privacy Act of 1974 (P.L. 93-579)** requires that you be given certain information in connection with your submission of the attached form related to a patent application or patent. Accordingly, pursuant to the requirements of the Act, please be advised that: (1) the general authority for the collection of this information is 35 U.S.C. 2(b)(2); (2) furnishing of the information solicited is voluntary; and (3) the principal purpose for which the information is used by the U.S. Patent and Trademark Office is to process and/or examine your submission related to a patent application or patent. If you do not furnish the requested information, the U.S. Patent and Trademark Office may not be able to process and/or examine your submission, which may result in termination of proceedings or abandonment of the application or expiration of the patent.

The information provided by you in this form will be subject to the following routine uses:

1. The information on this form will be treated confidentially to the extent allowed under the Freedom of Information Act (5 U.S.C. 552) and the Privacy Act (5 U.S.C 552a). Records from this system of records may be disclosed to the Department of Justice to determine whether disclosure of these records is required by the Freedom of Information Act.
2. A record from this system of records may be disclosed, as a routine use, in the course of presenting evidence to a court, magistrate, or administrative tribunal, including disclosures to opposing counsel in the course of settlement negotiations.
3. A record in this system of records may be disclosed, as a routine use, to a Member of Congress submitting a request involving an individual, to whom the record pertains, when the individual has requested assistance from the Member with respect to the subject matter of the record.
4. A record in this system of records may be disclosed, as a routine use, to a contractor of the Agency having need for the information in order to perform a contract. Recipients of information shall be required to comply with the requirements of the Privacy Act of 1974, as amended, pursuant to 5 U.S.C. 552a(m).
5. A record related to an International Application filed under the Patent Cooperation Treaty in this system of records may be disclosed, as a routine use, to the International Bureau of the World Intellectual Property Organization, pursuant to the Patent Cooperation Treaty.
6. A record in this system of records may be disclosed, as a routine use, to another federal agency for purposes of National Security review (35 U.S.C. 181) and for review pursuant to the Atomic Energy Act (42 U.S.C. 218(c)).
7. A record from this system of records may be disclosed, as a routine use, to the Administrator, General Services, or his/her designee, during an inspection of records conducted by GSA as part of that agency's responsibility to recommend improvements in records management practices and programs, under authority of 44 U.S.C. 2904 and 2906. Such disclosure shall be made in accordance with the GSA regulations governing inspection of records for this purpose, and any other relevant (*i.e.*, GSA or Commerce) directive. Such disclosure shall not be used to make determinations about individuals.
8. A record from this system of records may be disclosed, as a routine use, to the public after either publication of the application pursuant to 35 U.S.C. 122(b) or issuance of a patent pursuant to 35 U.S.C. 151. Further, a record may be disclosed, subject to the limitations of 37 CFR 1.14, as a routine use, to the public if the record was filed in an application which became abandoned or in which the proceedings were terminated and which application is referenced by either a published application, an application open to public inspection or an issued patent.
9. A record from this system of records may be disclosed, as a routine use, to a Federal, State, or local law enforcement agency, if the USPTO becomes aware of a violation or potential violation of law or regulation.

IFW

OPAP IAP30 JUN 2 8 2013 PATENT & TRADEMARK OFFICE

PTO/SB/122 (11-08)
Approved for use through 11/30/2011. OMB 0651-0035
U.S. Patent and Trademark Office; U.S. DEPARTMENT OF COMMERCE
Under the Paperwork Reduction Act of 1995, no persons are required to respond to a collection of information unless it displays a valid OMB control number.

CHANGE OF CORRESPONDENCE ADDRESS
Application

Address to:
Commissioner for Patents
P.O. Box 1450
Alexandria, VA 22313-1450

Application Number	11/241,748
Filing Date	9/29/2005
First Named Inventor	Anton Monk
Art Unit	2425
Examiner Name	CHEN, CAI Y
Attorney Docket Number	E040004USU2

Please change the Correspondence Address for the above-identified patent application to:

☑ The address associated with Customer Number: 77330

OR

☐ Firm or Individual Name

Address

City | State | Zip

Country

Telephone | Email

This form cannot be used to change the data associated with a Customer Number. To change the data associated with an existing Customer Number use "Request for Customer Number Data Change" (PTO/SB/124).

I am the:

☐ Applicant/Inventor

☐ Assignee of record of the entire interest.
Statement under 37 CFR 3.73(b) is enclosed. (Form PTO/SB/96).

☑ Attorney or agent of record. Registration Number 25,107.

☐ Registered practitioner named in the application transmittal letter in an application without an executed oath or declaration. See 37 CFR 1.33(a)(1). Registration Number_____.

Signature /Richard Andre Bachand/

Typed or Printed Name Richard A. Bachand

Date June 25, 2013 | Telephone (858) 768-3835

NOTE: Signatures of all the inventors or assignees of record of the entire interest or their representative(s) are required. Submit multiple forms if more than one signature is required, see below*.

☑ *Total of 4 forms are submitted.

This collection of information is required by 37 CFR 1.33. The information is required to obtain or retain a benefit by the public which is to file (and by the USPTO to process) an application. Confidentiality is governed by 35 U.S.C. 122 and 37 CFR 1.11 and 1.14. This collection is estimated to take 3 minutes to complete, including gathering, preparing, and submitting the completed application form to the USPTO. Time will vary depending upon the individual case. Any comments on the amount of time you require to complete this form and/or suggestions for reducing this burden, should be sent to the Chief Information Officer, U.S. Patent and Trademark Office, U.S. Department of Commerce, P.O. Box 1450, Alexandria, VA 22313-1450. DO NOT SEND FEES OR COMPLETED FORMS TO THIS ADDRESS. **SEND TO: Commissioner for Patents, P.O. Box 1450, Alexandria, VA 22313-1450.**

If you need assistance in completing the form, call 1-800-PTO-9199 and select option 2.

RECEIVED OPAP/IAP JUL 10 2013

UNITED STATES PATENT AND TRADEMARK OFFICE

UNITED STATES DEPARTMENT OF COMMERCE
United States Patent and Trademark Office
Address: COMMISSIONER FOR PATENTS
P.O. Box 1450
Alexandria, Virginia 22313-1450
www.uspto.gov

APPLICATION NO.	FILING DATE	FIRST NAMED INVENTOR	ATTORNEY DOCKET NO.	CONFIRMATION NO.
11/241,748	09/29/2005	Anton Monk	E040004USU2	2829

77330 7590 07/02/2013
ENTROPIC COMMUNICATIONS, INC.
6290 SEQUENCE DRIVE
SAN DIEGO, CA 92121

EXAMINER
CHEN, CAI Y

ART UNIT	PAPER NUMBER
2425	

MAIL DATE	DELIVERY MODE
07/02/2013	PAPER

Please find below and/or attached an Office communication concerning this application or proceeding.

The time period for reply, if any, is set in the attached communication.

PTOL-90A (Rev. 04/07)

UNITED STATES PATENT AND TRADEMARK OFFICE

Commissioner for Patents
United States Patent and Trademark Office
P.O. Box 1450
Alexandria, VA 22313-1450
www.uspto.gov

Application No. : 11241748
Applicant : Monk
Filing Date : 09/29/2005
Date Mailed : 07/02/2013

NOTICE TO FILE CORRECTED APPLICATION PAPERS

Notice of Allowance Mailed

This application has been accorded an Allowance Date and is being prepared for issuance. The application, however, is incomplete for the reasons below.

Applicant is given 1 month(s) from the mail date of this Notice, or the time remaining from the Notice of Allowance and Fee(s) Due, whichever is longer, within which to respond.

The informalities requiring correction are indicated in the attachment(s). If the informality pertains to the abstract, specification (including claims) or drawings, the informality must be corrected with an amendment in compliance with 37 CFR 1.121 (or, if the application is a reissue application, 37 CFR 1.173). Such an amendment may be filed after payment of the issue fee if limited to correction of informalities noted herein. See Waiver of 37 CFR 1.312 for Documents Required by the Office of Patent Publication, 1280 Off. Gaz. Patent Office 918 (March 23, 2004). In addition, if the informality is not corrected until after payment of the issue fee, for purposes of 35 U.S.C. 154(b)(1)(iv), "all outstanding requirements" will be considered to have been satisfied when the informality has been corrected. A failure to respond within the above-identified time period will result in the application being ABANDONED. **This period for reply is NOT extendable under 37 CFR 1.136(a).**

See attachment(s).

A copy of this notice MUST be returned with the reply. Please address response to "Mail Stop Issue Fee, Commissioner for Patents, P.O. Box 1450, Alexandria, VA 22313-1450".

/Midel Geronimo/
Publication Branch
Office of Data Management
(571) 272-4200

Application No. 11241748

IDENTIFICATION OF APPLICATION DEFICIENCIES

☐ Applicant must provide legible text for the following item(s).

- ☐ Specification filed , page(s) .
- ☐ Claims filed , claim(s) .
- ☐ Oath/declaration filed .
- ☐ Other: .

☐ Applicant must provide missing information on the following page(s) of the specification by amending the specification to add the missing text. No new matter may be added.

☐ The specification refers to one or more applications by attorney docket number and does not show the U.S. application number(s). Applicant must supply the U.S. application number in place of each attorney docket number.

☐ Applicant must provide an Abstract of the Disclosure.

☐ Applicant has submitted a DECLARATION (37 CFR 1.63) FOR A UTILITY OR DESIGN APPLICATION USING AN APPLICATION DATA SHEET (37 CFR 1.76) (e.g., form PTO/SB/01A). The Application Data Sheet, however, is not present with the filed application. Applicant must submit an Application Data Sheet or file a new oath or declaration (e.g., PTO/SB/01) executed by the inventors and containing the information required in 37 CFR 1.63.

☐ Applicant must provide an executed declaration.

☐ Applicant must provide the missing page(s) of the oath/declaration or Application Data Sheet filed

☐ Applicant must provide a declaration signed by inventor(s) .

☐ The oath/declaration filed shows non-initialed and/or non-dated alterations. Applicant must file a new oath/declaration in compliance with 37 CFR 1.67(a).

☒ Applicant(s) Edward WARNER in the latest-filed oath/declaration or Application Data Sheet (ADS) did not show the inventor's residence at all, or did not show both a city and state in the U.S. inventor's residence, or did not show both a city and country in the non-U.S. inventor's residence. Applicant must supply an oath/declaration or Application Data Sheet (ADS) that shows each U.S. inventor's city and state of residence and each non-U.S. inventor's city and country of residence.

UNITED STATES PATENT AND TRADEMARK OFFICE

UNITED STATES DEPARTMENT OF COMMERCE
United States Patent and Trademark Office
Address: COMMISSIONER FOR PATENTS
P.O. Box 1450
Alexandria, Virginia 22313-1450
www.uspto.gov

APPLICATION NO.	FILING DATE	FIRST NAMED INVENTOR	ATTORNEY DOCKET NO.	CONFIRMATION NO.
11/241,748	09/29/2005	Anton Monk	E040004USU2	2829

77330 7590 07/10/2013
ENTROPIC COMMUNICATIONS, INC.
6290 SEQUENCE DRIVE
SAN DIEGO, CA 92121

EXAMINER
CHEN, CAI Y

ART UNIT	PAPER NUMBER
2425	

MAIL DATE	DELIVERY MODE
07/10/2013	PAPER

Please find below and/or attached an Office communication concerning this application or proceeding.

The time period for reply, if any, is set in the attached communication.

UNITED STATES DEPARTMENT OF COMMERCE
U.S. Patent and Trademark Office
Address : COMMISSIONER FOR PATENTS
P.O. Box 1450
Alexandria, Virginia 22313-1450

APPLICATION NO./ CONTROL NO.	FILING DATE	FIRST NAMED INVENTOR / PATENT IN REEXAMINATION	ATTORNEY DOCKET NO.
11/241,748	29 September, 2005	MONK ET AL.	E040004USU2

		EXAMINER	
ENTROPIC COMMUNICATIONS, INC. 6290 SEQUENCE DRIVE SAN DIEGO, CA 92121		CAI CHEN	
		ART UNIT	PAPER
		2425	20130708A

DATE MAILED:

Please find below and/or attached an Office communication concerning this application or proceeding.

Commissioner for Patents

The IDS filed on 06/25/2013 has been considered by the examiner.

/CAI CHEN/
Examiner, Art Unit 2425

PTO-90C (Rev.04-03)

PTO/SB/08a (01-10)
Approved for use through 07/31/2012. OMB 0651-0031
U.S. Patent and Trademark Office; U.S. DEPARTMENT OF COMMERCE
Under the Paperwork Reduction Act of 1995, no persons are required to respond to a collection of information unless it contains a valid OMB control number.

INFORMATION DISCLOSURE STATEMENT BY APPLICANT (Not for submission under 37 CFR 1.99)		
	Application Number	11241748
	Filing Date	2005-09-29
	First Named Inventor	Anton Monk
	Art Unit	2425
	Examiner Name	CHEN, CAI Y
	Attorney Docket Number	E040004USU2

U.S.PATENTS						Remove
Examiner Initial*	Cite No	Patent Number	Kind Code[1]	Issue Date	Name of Patentee or Applicant of cited Document	Pages,Columns,Lines where Relevant Passages or Relevant Figures Appear
	1	6481013	B1	2002-11-12	Dinwiddie et al.	
	2	6052380		2000-04-18	Bell	
If you wish to add additional U.S. Patent citation information please click the Add button.						Add

U.S.PATENT APPLICATION PUBLICATIONS						Remove
Examiner Initial*	Cite No	Publication Number	Kind Code[1]	Publication Date	Name of Patentee or Applicant of cited Document	Pages,Columns,Lines where Relevant Passages or Relevant Figures Appear
	1	20020149705	A1	2002-10-17	Allen et al.	
	2	20090217325	A1	2009-08-27	Kliger et al.	
	3	20030091067	A1	2003-05-15	Emerson et al.	
	4	20060221819	A1	2006-10-05	Padwekar	
If you wish to add additional U.S. Published Application citation information please click the Add button.						Add

FOREIGN PATENT DOCUMENTS	Remove

ALL REFERENCES CONSIDERED EXCEPT WHERE LINED THROUGH. /C.C./

INFORMATION DISCLOSURE STATEMENT BY APPLICANT (Not for submission under 37 CFR 1.99)	Application Number	11241748
	Filing Date	2005-09-29
	First Named Inventor	Anton Monk
	Art Unit	2425
	Examiner Name	CHEN, CAI Y
	Attorney Docket Number	E040004USU2

Examiner Initial*	Cite No	Foreign Document Number[3]	Country Code[2] i	Kind Code[4]	Publication Date	Name of Patentee or Applicant of cited Document	Pages,Columns,Lines where Relevant Passages or Relevant Figures Appear	T[5]
	1							☐

If you wish to add additional Foreign Patent Document citation information please click the Add button Add

NON-PATENT LITERATURE DOCUMENTS Remove

Examiner Initials*	Cite No	Include name of the author (in CAPITAL LETTERS), title of the article (when appropriate), title of the item (book, magazine, journal, serial, symposium, catalog, etc), date, pages(s), volume-issue number(s), publisher, city and/or country where published.	T[5]
	1		☐

If you wish to add additional non-patent literature document citation information please click the Add button Add

EXAMINER SIGNATURE

Examiner Signature	/Cai Chen/	Date Considered	07/08/2013

*EXAMINER: Initial if reference considered, whether or not citation is in conformance with MPEP 609. Draw line through a citation if not in conformance and not considered. Include copy of this form with next communication to applicant.

[1] See Kind Codes of USPTO Patent Documents at www.USPTO.GOV or MPEP 901.04. [2] Enter office that issued the document, by the two-letter code (WIPO Standard ST.3). [3] For Japanese patent documents, the indication of the year of the reign of the Emperor must precede the serial number of the patent document. [4] Kind of document by the appropriate symbols as indicated on the document under WIPO Standard ST.16 if possible. [5] Applicant is to place a check mark here if English language translation is attached.

EFS Web 2.1.17 ALL REFERENCES CONSIDERED EXCEPT WHERE LINED THROUGH. /C.C./

INFORMATION DISCLOSURE STATEMENT BY APPLICANT (Not for submission under 37 CFR 1.99)	Application Number	11241748
	Filing Date	2005-09-29
	First Named Inventor	Anton Monk
	Art Unit	2425
	Examiner Name	CHEN, CAI Y
	Attorney Docket Number	E040004USU2

CERTIFICATION STATEMENT

Please see 37 CFR 1.97 and 1.98 to make the appropriate selection(s):

☐ That each item of information contained in the information disclosure statement was first cited in any communication from a foreign patent office in a counterpart foreign application not more than three months prior to the filing of the information disclosure statement. See 37 CFR 1.97(e)(1).

OR

☒ That no item of information contained in the information disclosure statement was cited in a communication from a foreign patent office in a counterpart foreign application, and, to the knowledge of the person signing the certification after making reasonable inquiry, no item of information contained in the information disclosure statement was known to any individual designated in 37 CFR 1.56(c) more than three months prior to the filing of the information disclosure statement. See 37 CFR 1.97(e)(2).

☐ See attached certification statement.

☒ The fee set forth in 37 CFR 1.17 (p) has been submitted herewith.

☐ A certification statement is not submitted herewith.

SIGNATURE

A signature of the applicant or representative is required in accordance with CFR 1.33, 10.18. Please see CFR 1.4(d) for the form of the signature.

Signature	/Richard Andre Bachand/	Date (YYYY-MM-DD)	2013-06-25
Name/Print	Richard A. Bachand	Registration Number	25,107

This collection of information is required by 37 CFR 1.97 and 1.98. The information is required to obtain or retain a benefit by the public which is to file (and by the USPTO to process) an application. Confidentiality is governed by 35 U.S.C. 122 and 37 CFR 1.14. This collection is estimated to take 1 hour to complete, including gathering, preparing and submitting the completed application form to the USPTO. Time will vary depending upon the individual case. Any comments on the amount of time you require to complete this form and/or suggestions for reducing this burden, should be sent to the Chief Information Officer, U.S. Patent and Trademark Office, U.S. Department of Commerce, P.O. Box 1450, Alexandria, VA 22313-1450. DO NOT SEND FEES OR COMPLETED FORMS TO THIS ADDRESS. **SEND TO: Commissioner for Patents, P.O. Box 1450, Alexandria, VA 22313-1450.**

ALL REFERENCES CONSIDERED EXCEPT WHERE LINED THROUGH. /C.C./

Privacy Act Statement

The Privacy Act of 1974 (P.L. 93-579) requires that you be given certain information in connection with your submission of the attached form related to a patent application or patent. Accordingly, pursuant to the requirements of the Act, please be advised that: (1) the general authority for the collection of this information is 35 U.S.C. 2(b)(2); (2) furnishing of the information solicited is voluntary; and (3) the principal purpose for which the information is used by the U.S. Patent and Trademark Office is to process and/or examine your submission related to a patent application or patent. If you do not furnish the requested information, the U.S. Patent and Trademark Office may not be able to process and/or examine your submission, which may result in termination of proceedings or abandonment of the application or expiration of the patent.

The information provided by you in this form will be subject to the following routine uses:

1. The information on this form will be treated confidentially to the extent allowed under the Freedom of Information Act (5 U.S.C. 552) and the Privacy Act (5 U.S.C. 552a). Records from this system of records may be disclosed to the Department of Justice to determine whether the Freedom of Information Act requires disclosure of these record s.

2. A record from this system of records may be disclosed, as a routine use, in the course of presenting evidence to a court, magistrate, or administrative tribunal, including disclosures to opposing counsel in the course of settlement negotiations.

3. A record in this system of records may be disclosed, as a routine use, to a Member of Congress submitting a request involving an individual, to whom the record pertains, when the individual has requested assistance from the Member with respect to the subject matter of the record.

4. A record in this system of records may be disclosed, as a routine use, to a contractor of the Agency having need for the information in order to perform a contract. Recipients of information shall be required to comply with the requirements of the Privacy Act of 1974, as amended, pursuant to 5 U.S.C. 552a(m).

5. A record related to an International Application filed under the Patent Cooperation Treaty in this system of records may be disclosed, as a routine use, to the International Bureau of the World Intellectual Property Organization, pursuant to the Patent Cooperation Treaty.

6. A record in this system of records may be disclosed, as a routine use, to another federal agency for purposes of National Security review (35 U.S.C. 181) and for review pursuant to the Atomic Energy Act (42 U.S.C. 218(c)).

7. A record from this system of records may be disclosed, as a routine use, to the Administrator, General Services, or his/her designee, during an inspection of records conducted by GSA as part of that agency's responsibility to recommend improvements in records management practices and programs, under authority of 44 U.S.C. 2904 and 2906. Such disclosure shall be made in accordance with the GSA regulations governing inspection of records for this purpose, and any other relevant (i.e., GSA or Commerce) directive. Such disclosure shall not be used to make determinations about individuals.

8. A record from this system of records may be disclosed, as a routine use, to the public after either publication of the application pursuant to 35 U.S.C. 122(b) or issuance of a patent pursuant to 35 U.S.C. 151. Further, a record may be disclosed, subject to the limitations of 37 CFR 1.14, as a routine use, to the public if the record was filed in an application which became abandoned or in which the proceedings were terminated and which application is referenced by either a published application, an application open to public inspections or an issued patent.

9. A record from this system of records may be disclosed, as a routine use, to a Federal, State, or local law enforcement agency, if the USPTO becomes aware of a violation or potential violation of law or regulation.

ALL REFERENCES CONSIDERED EXCEPT WHERE LINED THROUGH. /C.C./

UNITED STATES PATENT AND TRADEMARK OFFICE

UNITED STATES DEPARTMENT OF COMMERCE
United States Patent and Trademark Office
Address: COMMISSIONER FOR PATENTS
P.O. Box 1450
Alexandria, Virginia 22313-1450
www.uspto.gov

APPLICATION NO.	FILING DATE	FIRST NAMED INVENTOR	ATTORNEY DOCKET NO.	CONFIRMATION NO.
11/241,748	09/29/2005	Anton Monk	E040004USU2	2829

77330 7590 07/02/2013
ENTROPIC COMMUNICATIONS, INC.
6290 SEQUENCE DRIVE
SAN DIEGO, CA 92121

EXAMINER
CHEN, CAI Y

ART UNIT	PAPER NUMBER
2425	

MAIL DATE	DELIVERY MODE
07/02/2013	PAPER

Please find below and/or attached an Office communication concerning this application or proceeding.

The time period for reply, if any, is set in the attached communication.

UNITED STATES PATENT AND TRADEMARK OFFICE

Commissioner for Patents
United States Patent and Trademark Office
P.O. Box 1450
Alexandria, VA 22313-1450
www.uspto.gov

Application No. : 11241748
Applicant : Monk
Filing Date : 09/29/2005
Date Mailed : 07/02/2013

NOTICE TO FILE CORRECTED APPLICATION PAPERS

Notice of Allowance Mailed

This application has been accorded an Allowance Date and is being prepared for issuance. The application, however, is incomplete for the reasons below.

Applicant is given 1 month(s) from the mail date of this Notice, or the time remaining from the Notice of Allowance and Fee(s) Due, whichever is longer, within which to respond.

The informalities requiring correction are indicated in the attachment(s). If the informality pertains to the abstract, specification (including claims) or drawings, the informality must be corrected with an amendment in compliance with 37 CFR 1.121 (or, if the application is a reissue application, 37 CFR 1.173). Such an amendment may be filed after payment of the issue fee if limited to correction of informalities noted herein. See Waiver of 37 CFR 1.312 for Documents Required by the Office of Patent Publication, 1280 Off. Gaz. Patent Office 918 (March 23, 2004). In addition, if the informality is not corrected until after payment of the issue fee, for purposes of 35 U.S.C. 154(b)(1)(iv), "all outstanding requirements" will be considered to have been satisfied when the informality has been corrected. A failure to respond within the above-identified time period will result in the application being ABANDONED. **This period for reply is NOT extendable under 37 CFR 1.136(a).**

See attachment(s).

A copy of this notice MUST be returned with the reply. Please address response to "Mail Stop Issue Fee, Commissioner for Patents, P.O. Box 1450, Alexandria, VA 22313-1450".

/Midel Geronimo/
Publication Branch
Office of Data Management
(571) 272-4200

Application No. 11241748

IDENTIFICATION OF APPLICATION DEFICIENCIES

☐ Applicant must provide legible text for the following item(s).

- ☐ Specification filed , page(s) .
- ☐ Claims filed , claim(s) .
- ☐ Oath/declaration filed .
- ☐ Other: .

☐ Applicant must provide missing information on the following page(s) of the specification by amending the specification to add the missing text. No new matter may be added.

☐ The specification refers to one or more applications by attorney docket number and does not show the U.S. application number(s). Applicant must supply the U.S. application number in place of each attorney docket number.

☐ Applicant must provide an Abstract of the Disclosure.

☐ Applicant has submitted a DECLARATION (37 CFR 1.63) FOR A UTILITY OR DESIGN APPLICATION USING AN APPLICATION DATA SHEET (37 CFR 1.76) (e.g., form PTO/SB/01A). The Application Data Sheet, however, is not present with the filed application. Applicant must submit an Application Data Sheet or file a new oath or declaration (e.g., PTO/SB/01) executed by the inventors and containing the information required in 37 CFR 1.63.

☐ Applicant must provide an executed declaration.

☐ Applicant must provide the missing page(s) of the oath/declaration or Application Data Sheet filed

☐ Applicant must provide a declaration signed by inventor(s) .

☐ The oath/declaration filed shows non-initialed and/or non-dated alterations. Applicant must file a new oath/declaration in compliance with 37 CFR 1.67(a).

☒ Applicant(s) Edward WARNER in the latest-filed oath/declaration or Application Data Sheet (ADS) did not show the inventor's residence at all, or did not show both a city and state in the U.S. inventor's residence, or did not show both a city and country in the non-U.S. inventor's residence. Applicant must supply an oath/declaration or Application Data Sheet (ADS) that shows each U.S. inventor's city and state of residence and each non-U.S. inventor's city and country of residence.

PTO/AIA/14 (08-12)
Approved for use through 01/31/2014. OMB 0651-0032
U.S. Patent and Trademark Office; U.S. DEPARTMENT OF COMMERCE
Under the Paperwork Reduction Act of 1995, no persons are required to respond to a collection of information unless it contains a valid OMB control number.

Application Data Sheet 37 CFR 1.76	Attorney Docket Number	E040004USU2
	Application Number	
Title of Invention	PHYSICAL LAYER TRANSMITTER FOR USE IN A BROADBAND LOCAL AREA NETWORK	

The application data sheet is part of the provisional or nonprovisional application for which it is being submitted. The following form contains the bibliographic data arranged in a format specified by the United States Patent and Trademark Office as outlined in 37 CFR 1.76.
This document may be completed electronically and submitted to the Office in electronic format using the Electronic Filing System (EFS) or the document may be printed and included in a paper filed application.

Secrecy Order 37 CFR 5.2

☐ Portions or all of the application associated with this Application Data Sheet may fall under a Secrecy Order pursuant to 37 CFR 5.2 (Paper filers only. Applications that fall under Secrecy Order may not be filed electronically.)

Inventor Information:

Inventor 1 Remove

Legal Name

Prefix	Given Name	Middle Name	Family Name	Suffix
	Anton		Monk	

Residence Information (Select One) ◉ US Residency ◯ Non US Residency ◯ Active US Military Service

City	Del Mar	State/Province	CA	Country of Residence i	US

Mailing Address of Inventor:

Address 1	1149 Luneta Drive		
Address 2			
City	Del Mar	State/Province	CA
Postal Code	92014	Country i	US

Inventor 2 Remove

Legal Name

Prefix	Given Name	Middle Name	Family Name	Suffix
	Ron		Porat	

Residence Information (Select One) ◉ US Residency ◯ Non US Residency ◯ Active US Military Service

City	La Jolla	State/Province	CA	Country of Residence i	US

Mailing Address of Inventor:

Address 1	8695 Via Mallorca #24		
Address 2			
City	La Jolla	State/Province	CA
Postal Code	92037	Country i	US

Inventor 3 Remove

Legal Name

Prefix	Given Name	Middle Name	Family Name	Suffix
	Wee Peng		Goh	

Residence Information (Select One) ◉ US Residency ◯ Non US Residency ◯ Active US Military Service

Application Data Sheet 37 CFR 1.76	Attorney Docket Number	E040004USU2
	Application Number	
Title of Invention	PHYSICAL LAYER TRANSMITTER FOR USE IN A BROADBAND LOCAL AREA NETWORK	

City	Temecula	State/Province	CA	Country of Residence i	US

Mailing Address of Inventor:

Address 1	45816 Camino Rubi		
Address 2			
City	Temecula	State/Province	CA
Postal Code	92592	Country i	US

Inventor 4 Remove

Legal Name

Prefix	Given Name	Middle Name	Family Name	Suffix
	Magnus		Berggren	

Residence Information (Select One) (•) US Residency ( ) Non US Residency ( ) Active US Military Service

City	San Diego	State/Province	CA	Country of Residence i	US

Mailing Address of Inventor:

Address 1	972 Reed Avenue		
Address 2			
City	San Diego	State/Province	CA
Postal Code	92109	Country i	US

Inventor 5 Remove

Legal Name

Prefix	Given Name	Middle Name	Family Name	Suffix
	Ron		Lee	

Residence Information (Select One) (•) US Residency ( ) Non US Residency ( ) Active US Military Service

City	San Diego	State/Province	CA	Country of Residence i	US

Mailing Address of Inventor:

Address 1	12774 Seabreeze Farms Drive		
Address 2			
City	San Diego	State/Province	CA
Postal Code	92130	Country i	US

Inventor 6 Remove

Legal Name

Prefix	Given Name	Middle Name	Family Name	Suffix
	Edward		Warner	

Residence Information (Select One) (•) US Residency ( ) Non US Residency ( ) Active US Military Service

City	San Diego	State/Province	CA	Country of Residence i	US

Application Data Sheet 37 CFR 1.76	Attorney Docket Number	E040004USU2
	Application Number	
Title of Invention	PHYSICAL LAYER TRANSMITTER FOR USE IN A BROADBAND LOCAL AREA NETWORK	

Mailing Address of Inventor:

Address 1	6967 Haworth Street		
Address 2			
City	San Diego	**State/Province**	CA
Postal Code	92122	**Country** i	US

Inventor 7 Remove

Legal Name

Prefix	Given Name	Middle Name	Family Name	Suffix
	Brett		Bernath	

Residence Information (Select One) ◉ US Residency ◯ Non US Residency ◯ Active US Military Service

City	San Diego	**State/Province**	CA	**Country of Residence** i	US

Mailing Address of Inventor:

Address 1	4167 Calle Mar De Ballenas		
Address 2			
City	San Diego	**State/Province**	CA
Postal Code	92130	**Country** i	US

Inventor 8 Remove

Legal Name

Prefix	Given Name	Middle Name	Family Name	Suffix
	Yusuf		Ozturk	

Residence Information (Select One) ◉ US Residency ◯ Non US Residency ◯ Active US Military Service

City	San Diego	**State/Province**	CA	**Country of Residence** i	US

Mailing Address of Inventor:

Address 1	13092 Cayote Ave.		
Address 2			
City	San Diego	**State/Province**	CA
Postal Code	92129	**Country** i	US

All Inventors Must Be Listed - Additional Inventor Information blocks may be generated within this form by selecting the **Add** button. Add

Correspondence Information:

Enter either Customer Number or complete the Correspondence Information section below.
For further information see 37 CFR 1.33(a).

☐ **An Address is being provided for the correspondence Information of this application.**

Customer Number	77330

PTO/AIA/14 (08-12)
Approved for use through 01/31/2014. OMB 0651-0032
U.S. Patent and Trademark Office; U.S. DEPARTMENT OF COMMERCE
Under the Paperwork Reduction Act of 1995, no persons are required to respond to a collection of information unless it contains a valid OMB control number.

Application Data Sheet 37 CFR 1.76	Attorney Docket Number	E040004USU2
	Application Number	
Title of Invention	PHYSICAL LAYER TRANSMITTER FOR USE IN A BROADBAND LOCAL AREA NETWORK	

Email Address	patentteam@entropic.com	Add Email	Remove Email

Application Information:

Title of the Invention	PHYSICAL LAYER TRANSMITTER FOR USE IN A BROADBAND LOCAL AREA NETWORK		
Attorney Docket Number	E040004USU2	**Small Entity Status Claimed** ☐	
Application Type	Nonprovisional		
Subject Matter	Utility		
Suggested Class (if any)		**Sub Class (if any)**	
Suggested Technology Center (if any)			
Total Number of Drawing Sheets (if any)	25	**Suggested Figure for Publication (if any)**	3

Publication Information:

☐ Request Early Publication (Fee required at time of Request 37 CFR 1.219)

☐ **Request Not to Publish.** I hereby request that the attached application not be published under 35 U.S.C. 122(b) and certify that the invention disclosed in the attached application **has not and will not** be the subject of an application filed in another country, or under a multilateral international agreement, that requires publication at eighteen months after filing.

Representative Information:

Representative information should be provided for all practitioners having a power of attorney in the application. Providing this information in the Application Data Sheet does not constitute a power of attorney in the application (see 37 CFR 1.32).
Either enter Customer Number or complete the Representative Name section below. If both sections are completed the customer Number will be used for the Representative Information during processing.

Please Select One:	◉ Customer Number	◯ US Patent Practitioner	◯ Limited Recognition (37 CFR 11.9)
Customer Number	77330		

Domestic Benefit/National Stage Information:

This section allows for the applicant to either claim benefit under 35 U.S.C. 119(e), 120, 121, or 365(c) or indicate National Stage entry from a PCT application. Providing this information in the application data sheet constitutes the specific reference required by 35 U.S.C. 119(e) or 120, and 37 CFR 1.78.

Prior Application Status	Expired		Remove
Application Number	Continuity Type	Prior Application Number	Filing Date (YYYY-MM-DD)
11241748	non provisional of	60633091	2004-12-02
Prior Application Status	Expired		Remove
Application Number	Continuity Type	Prior Application Number	Filing Date (YYYY-MM-DD)
11241748	non provisional of	60632797	2004-12-02

Application Data Sheet 37 CFR 1.76	Attorney Docket Number	E040004USU2
	Application Number	
Title of Invention	PHYSICAL LAYER TRANSMITTER FOR USE IN A BROADBAND LOCAL AREA NETWORK	

Prior Application Status	Expired		Remove
Application Number	Continuity Type	Prior Application Number	Filing Date (YYYY-MM-DD)
11241748	non provisional of	60633002	2004-12-02
Prior Application Status	Expired		Remove
Application Number	Continuity Type	Prior Application Number	Filing Date (YYYY-MM-DD)
11241748	non provisional of	60632856	2004-12-02

Additional Domestic Benefit/National Stage Data may be generated within this form by selecting the **Add** button. Add

Foreign Priority Information:

This section allows for the applicant to claim benefit of foreign priority and to identify any prior foreign application for which priority is not claimed. Providing this information in the application data sheet constitutes the claim for priority as required by 35 U.S.C. 119(b) and 37 CFR 1.55(a).

Remove

Application Number	Country i	Filing Date (YYYY-MM-DD)	Priority Claimed
			○ Yes ◉ No

Additional Foreign Priority Data may be generated within this form by selecting the **Add** button. Add

Authorization to Permit Access:

☒ Authorization to Permit Access to the Instant Application by the Participating Offices

If checked, the undersigned hereby grants the USPTO authority to provide the European Patent Office (EPO), the Japan Patent Office (JPO), the Korean Intellectual Property Office (KIPO), the World Intellectual Property Office (WIPO), and any other intellectual property offices in which a foreign application claiming priority to the instant patent application is filed access to the instant patent application. See 37 CFR 1.14(c) and (h). This box should not be checked if the applicant does not wish the EPO, JPO, KIPO, WIPO, or other intellectual property office in which a foreign application claiming priority to the instant patent application is filed to have access to the instant patent application.

In accordance with 37 CFR 1.14(h)(3), access will be provided to a copy of the instant patent application with respect to: 1) the instant patent application-as-filed; 2) any foreign application to which the instant patent application claims priority under 35 U.S.C. 119(a)-(d) if a copy of the foreign application that satisfies the certified copy requirement of 37 CFR 1.55 has been filed in the instant patent application; and 3) any U.S. application-as-filed from which benefit is sought in the instant patent application.

In accordance with 37 CFR 1.14(c), access may be provided to information concerning the date of filing this Authorization.

Under the Paperwork Reduction Act of 1995, no persons are required to respond to a collection of information unless it contains a valid OMB control number.

Application Data Sheet 37 CFR 1.76	Attorney Docket Number	E040004USU2
	Application Number	
Title of Invention	PHYSICAL LAYER TRANSMITTER FOR USE IN A BROADBAND LOCAL AREA NETWORK	

Applicant Information:

Providing assignment information in this section does not substitute for compliance with any requirement of part 3 of Title 37 of CFR to have an assignment recorded by the Office.

Applicant 1 Remove

If the applicant is the inventor (or the remaining joint inventor or inventors under 37 CFR 1.45), this section should not be completed. The information to be provided in this section is the name and address of the legal representative who is the applicant under 37 CFR 1.43; or the name and address of the assignee, person to whom the inventor is under an obligation to assign the invention, or person who otherwise shows sufficient proprietary interest in the matter who is the applicant under 37 CFR 1.46. If the applicant is an applicant under 37 CFR 1.46 (assignee, person to whom the inventor is obligated to assign, or person who otherwise shows sufficient proprietary interest) together with one or more joint inventors, then the joint inventor or inventors who are also the applicant should be identified in this section.

Clear

(●) Assignee ( ) Legal Representative under 35 U.S.C. 117 ( ) Joint Inventor

( ) Person to whom the inventor is obligated to assign. ( ) Person who shows sufficient proprietary interest

If applicant is the legal representative, indicate the authority to file the patent application, the inventor is:

Name of the Deceased or Legally Incapacitated Inventor :

If the Applicant is an Organization check here. [X]

Organization Name	Entropic Communications, Inc.		
Mailing Address Information:			
Address 1	6290 Sequence Drive		
Address 2			
City	San Diego	**State/Province**	CA
Country i	US	Postal Code	92121
Phone Number	(858) 768-3835	Fax Number	(858) 768-3601
Email Address	patentteam@entropic.com		

Additional Applicant Data may be generated within this form by selecting the Add button. Add

Non-Applicant Assignee Information:

Providing assignment information in this section does not subsitute for compliance with any requirement of part 3 of Title 37 of CFR to have an assignment recorded by the Office.

Under the Paperwork Reduction Act of 1995, no persons are required to respond to a collection of information unless it contains a valid OMB control number.

Application Data Sheet 37 CFR 1.76	Attorney Docket Number	E040004USU2
	Application Number	
Title of Invention	PHYSICAL LAYER TRANSMITTER FOR USE IN A BROADBAND LOCAL AREA NETWORK	

Assignee 1

Complete this section only if non-applicant assignee information is desired to be included on the patent application publication in accordance with 37 CFR 1.215(b). Do not include in this section an applicant under 37 CFR 1.46 (assignee, person to whom the inventor is obligated to assign, or person who otherwise shows sufficient proprietary interest), as the patent application publication will include the name of the applicant(s).

Remove

If the Assignee is an Organization check here. ☐

Prefix	**Given Name**	Middle Name	**Family Name**	Suffix

Mailing Address Information:

Address 1			
Address 2			
City		**State/Province**	
Country i		Postal Code	
Phone Number		Fax Number	
Email Address			

Additional Assignee Data may be generated within this form by selecting the Add button. Add

Signature:

Remove

NOTE: This form must be signed in accordance with 37 CFR 1.33. See 37 CFR 1.4 for signature requirements and certifications

Signature	/Richard Andre Bachand/			Date (YYYY-MM-DD)	2013-08-02
First Name	Richard	Last Name	Bachand	Registration Number	25107

Additional Signature may be generated within this form by selecting the Add button. Add

This collection of information is required by 37 CFR 1.76. The information is required to obtain or retain a benefit by the public which is to file (and by the USPTO to process) an application. Confidentiality is governed by 35 U.S.C. 122 and 37 CFR 1.14. This collection is estimated to take 23 minutes to complete, including gathering, preparing, and submitting the completed application data sheet form to the USPTO. Time will vary depending upon the individual case. Any comments on the amount of time you require to complete this form and/or suggestions for reducing this burden, should be sent to the Chief Information Officer, U.S. Patent and Trademark Office, U.S. Department of Commerce, P.O. Box 1450, Alexandria, VA 22313-1450. DO NOT SEND FEES OR COMPLETED FORMS TO THIS ADDRESS. **SEND TO: Commissioner for Patents, P.O. Box 1450, Alexandria, VA 22313-1450.**

Privacy Act Statement

The Privacy Act of 1974 (P.L. 93-579) requires that you be given certain information in connection with your submission of the attached form related to a patent application or patent. Accordingly, pursuant to the requirements of the Act, please be advised that: (1) the general authority for the collection of this information is 35 U.S.C. 2(b)(2); (2) furnishing of the information solicited is voluntary; and (3) the principal purpose for which the information is used by the U.S. Patent and Trademark Office is to process and/or examine your submission related to a patent application or patent. If you do not furnish the requested information, the U.S. Patent and Trademark Office may not be able to process and/or examine your submission, which may result in termination of proceedings or abandonment of the application or expiration of the patent.

The information provided by you in this form will be subject to the following routine uses:

1. The information on this form will be treated confidentially to the extent allowed under the Freedom of Information Act (5 U.S.C. 552) and the Privacy Act (5 U.S.C. 552a). Records from this system of records may be disclosed to the Department of Justice to determine whether the Freedom of Information Act requires disclosure of these records.

2. A record from this system of records may be disclosed, as a routine use, in the course of presenting evidence to a court, magistrate, or administrative tribunal, including disclosures to opposing counsel in the course of settlement negotiations.

3. A record in this system of records may be disclosed, as a routine use, to a Member of Congress submitting a request involving an individual, to whom the record pertains, when the individual has requested assistance from the Member with respect to the subject matter of the record.

4. A record in this system of records may be disclosed, as a routine use, to a contractor of the Agency having need for the information in order to perform a contract. Recipients of information shall be required to comply with the requirements of the Privacy Act of 1974, as amended, pursuant to 5 U.S.C. 552a(m).

5. A record related to an International Application filed under the Patent Cooperation Treaty in this system of records may be disclosed, as a routine use, to the International Bureau of the World Intellectual Property Organization, pursuant to the Patent Cooperation Treaty.

6. A record in this system of records may be disclosed, as a routine use, to another federal agency for purposes of National Security review (35 U.S.C. 181) and for review pursuant to the Atomic Energy Act (42 U.S.C. 218(c)).

7. A record from this system of records may be disclosed, as a routine use, to the Administrator, General Services, or his/her designee, during an inspection of records conducted by GSA as part of that agency's responsibility to recommend improvements in records management practices and programs, under authority of 44 U.S.C. 2904 and 2906. Such disclosure shall be made in accordance with the GSA regulations governing inspection of records for this purpose, and any other relevant (i.e., GSA or Commerce) directive. Such disclosure shall not be used to make determinations about individuals.

8. A record from this system of records may be disclosed, as a routine use, to the public after either publication of the application pursuant to 35 U.S.C. 122(b) or issuance of a patent pursuant to 35 U.S.C. 151. Further, a record may be disclosed, subject to the limitations of 37 CFR 1.14, as a routine use, to the public if the record was filed in an application which became abandoned or in which the proceedings were terminated and which application is referenced by either a published application, an application open to public inspections or an issued patent.

9. A record from this system of records may be disclosed, as a routine use, to a Federal, State, or local law enforcement agency, if the USPTO becomes aware of a violation or potential violation of law or regulation.

Electronic Acknowledgement Receipt

EFS ID:	16491202
Application Number:	11241748
International Application Number:	
Confirmation Number:	2829
Title of Invention:	PHYSICAL LAYER TRANSMITTER FOR USE IN A BROADBAND LOCAL AREA NETWORK
First Named Inventor/Applicant Name:	Anton Monk
Customer Number:	77330
Filer:	Richard A. Bachand/Tara Sallee
Filer Authorized By:	Richard A. Bachand
Attorney Docket Number:	E040004USU2
Receipt Date:	02-AUG-2013
Filing Date:	29-SEP-2005
Time Stamp:	16:31:33
Application Type:	Utility under 35 USC 111(a)

Payment information:

Submitted with Payment	no

File Listing:

Document Number	Document Description	File Name	File Size(Bytes)/ Message Digest	Multi Part /.zip	Pages (if appl.)
1	Miscellaneous Incoming Letter	Notice_to_Correct_App_Papers.pdf	107397 adf938e0c948691c08cdaddeece80bceb5eaa105	no	3

Warnings:

Information:

2	Application Data Sheet	2013-08-02_ADS_E040004USU2.pdf	2121590 2189c96bbe9e776183366e4a884df2d1235f5c55	no	8
Warnings:					
Information:					
		Total Files Size (in bytes):	2228987		

This Acknowledgement Receipt evidences receipt on the noted date by the USPTO of the indicated documents, characterized by the applicant, and including page counts, where applicable. It serves as evidence of receipt similar to a Post Card, as described in MPEP 503.

<u>New Applications Under 35 U.S.C. 111</u>
If a new application is being filed and the application includes the necessary components for a filing date (see 37 CFR 1.53(b)-(d) and MPEP 506), a Filing Receipt (37 CFR 1.54) will be issued in due course and the date shown on this Acknowledgement Receipt will establish the filing date of the application.

<u>National Stage of an International Application under 35 U.S.C. 371</u>
If a timely submission to enter the national stage of an international application is compliant with the conditions of 35 U.S.C. 371 and other applicable requirements a Form PCT/DO/EO/903 indicating acceptance of the application as a national stage submission under 35 U.S.C. 371 will be issued in addition to the Filing Receipt, in due course.

<u>New International Application Filed with the USPTO as a Receiving Office</u>
If a new international application is being filed and the international application includes the necessary components for an international filing date (see PCT Article 11 and MPEP 1810), a Notification of the International Application Number and of the International Filing Date (Form PCT/RO/105) will be issued in due course, subject to prescriptions concerning national security, and the date shown on this Acknowledgement Receipt will establish the international filing date of the application.

UNITED STATES PATENT AND TRADEMARK OFFICE

UNITED STATES DEPARTMENT OF COMMERCE
United States Patent and Trademark Office
Address: COMMISSIONER FOR PATENTS
P.O. Box 1450
Alexandria, Virginia 22313-1450
www.uspto.gov

APPLICATION NO.	ISSUE DATE	PATENT NO.	ATTORNEY DOCKET NO.	CONFIRMATION NO.
11/241,748	12/31/2013	8621539	E040004USU2	2829

77330 7590 12/11/2013
ENTROPIC COMMUNICATIONS, INC.
6290 SEQUENCE DRIVE
SAN DIEGO, CA 92121

ISSUE NOTIFICATION

The projected patent number and issue date are specified above.

Determination of Patent Term Adjustment under 35 U.S.C. 154 (b)
(application filed on or after May 29, 2000)

The Patent Term Adjustment is 1010 day(s). Any patent to issue from the above-identified application will include an indication of the adjustment on the front page.

If a Continued Prosecution Application (CPA) was filed in the above-identified application, the filing date that determines Patent Term Adjustment is the filing date of the most recent CPA.

Applicant will be able to obtain more detailed information by accessing the Patent Application Information Retrieval (PAIR) WEB site (http://pair.uspto.gov).

Any questions regarding the Patent Term Extension or Adjustment determination should be directed to the Office of Patent Legal Administration at (571)-272-7702. Questions relating to issue and publication fee payments should be directed to the Application Assistance Unit (AAU) of the Office of Data Management (ODM) at (571)-272-4200.

APPLICANT(s) (Please see PAIR WEB site http://pair.uspto.gov for additional applicants):

Anton Monk, San Diego, CA;
Ron Porat, San Diego, CA;
Wee-Peng Goh, Murrieta, CA;
Magnus Berggren, San Diego, CA;
Ron Lee, San Diego, CA;
Edward Warner, San Diego, CA;
Brett Bernath, San Diego, CA;
Yusuf Ozturk, San Diego, CA;

The United States represents the largest, most dynamic marketplace in the world and is an unparalleled location for business investment, innovation, and commercialization of new technologies. The USA offers tremendous resources and advantages for those who invest and manufacture goods here. Through SelectUSA, our nation works to encourage and facilitate business investment. To learn more about why the USA is the best country in the world to develop technology, manufacture products, and grow your business, visit SelectUSA.gov.

IR103 (Rev. 10/09)

PTO/SB/44 (09-07)
Approved for use through 08/31/2013. OMB 0651-0033
U.S. Patent and Trademark Office; U.S. DEPARTMENT OF COMMERCE
Under the Paperwork Reduction Act of 1995, no persons are required to respond to a collection of information unless it displays a valid OMB control number.
(Also Form PTO-1050)

UNITED STATES PATENT AND TRADEMARK OFFICE
CERTIFICATE OF CORRECTION

PATENT NO. : 8,621,539

APPLICATION NO.: 11/241,748

ISSUE DATE : December 31, 3013

INVENTOR(S) : Anton Monk, Ron Porat, Wee Peng Goh, Magnus Berggren, Ron Lee, Edward Warner, Brett Bernath, Yusuf Ozturk

It is certified that an error appears or errors appear in the above-identified patent and that said Letters Patent is hereby corrected as shown below:

Claim 1, line 13, change "transmit" to --probe--.

MAILING ADDRESS OF SENDER (Please do not use customer number below):

Patent Team
Entropic Communications, Inc.
6290 Sequence Drive, San Diego, CA 92121

This collection of information is required by 37 CFR 1.322, 1.323, and 1.324. The information is required to obtain or retain a benefit by the public which is to file (and by the USPTO to process) an application. Confidentiality is governed by 35 U.S.C. 122 and 37 CFR 1.14. This collection is estimated to take 1.0 hour to complete, including gathering, preparing, and submitting the completed application form to the USPTO. Time will vary depending upon the individual case. Any comments on the amount of time you require to complete this form and/or suggestions for reducing this burden, should be sent to the Chief Information Officer, U.S. Patent and Trademark Office, U.S. Department of Commerce, P.O. Box 1450, Alexandria, VA 22313-1450. DO NOT SEND FEES OR COMPLETED FORMS TO THIS ADDRESS. **SEND TO: Attention Certificate of Corrections Branch, Commissioner for Patents, P.O. Box 1450, Alexandria, VA 22313-1450.**

If you need assistance in completing the form, call 1-800-PTO-9199 and select option 2.

Privacy Act Statement

The **Privacy Act of 1974 (P.L. 93-579)** requires that you be given certain information in connection with your submission of the attached form related to a patent application or patent. Accordingly, pursuant to the requirements of the Act, please be advised that: (1) the general authority for the collection of this information is 35 U.S.C. 2(b)(2); (2) furnishing of the information solicited is voluntary; and (3) the principal purpose for which the information is used by the U.S. Patent and Trademark Office is to process and/or examine your submission related to a patent application or patent. If you do not furnish the requested information, the U.S. Patent and Trademark Office may not be able to process and/or examine your submission, which may result in termination of proceedings or abandonment of the application or expiration of the patent.

The information provided by you in this form will be subject to the following routine uses:

1. The information on this form will be treated confidentially to the extent allowed under the Freedom of Information Act (5 U.S.C. 552) and the Privacy Act (5 U.S.C 552a). Records from this system of records may be disclosed to the Department of Justice to determine whether disclosure of these records is required by the Freedom of Information Act.
2. A record from this system of records may be disclosed, as a routine use, in the course of presenting evidence to a court, magistrate, or administrative tribunal, including disclosures to opposing counsel in the course of settlement negotiations.
3. A record in this system of records may be disclosed, as a routine use, to a Member of Congress submitting a request involving an individual, to whom the record pertains, when the individual has requested assistance from the Member with respect to the subject matter of the record.
4. A record in this system of records may be disclosed, as a routine use, to a contractor of the Agency having need for the information in order to perform a contract. Recipients of information shall be required to comply with the requirements of the Privacy Act of 1974, as amended, pursuant to 5 U.S.C. 552a(m).
5. A record related to an International Application filed under the Patent Cooperation Treaty in this system of records may be disclosed, as a routine use, to the International Bureau of the World Intellectual Property Organization, pursuant to the Patent Cooperation Treaty.
6. A record in this system of records may be disclosed, as a routine use, to another federal agency for purposes of National Security review (35 U.S.C. 181) and for review pursuant to the Atomic Energy Act (42 U.S.C. 218(c)).
7. A record from this system of records may be disclosed, as a routine use, to the Administrator, General Services, or his/her designee, during an inspection of records conducted by GSA as part of that agency's responsibility to recommend improvements in records management practices and programs, under authority of 44 U.S.C. 2904 and 2906. Such disclosure shall be made in accordance with the GSA regulations governing inspection of records for this purpose, and any other relevant (*i.e.*, GSA or Commerce) directive. Such disclosure shall not be used to make determinations about individuals.
8. A record from this system of records may be disclosed, as a routine use, to the public after either publication of the application pursuant to 35 U.S.C. 122(b) or issuance of a patent pursuant to 35 U.S.C. 151. Further, a record may be disclosed, subject to the limitations of 37 CFR 1.14, as a routine use, to the public if the record was filed in an application which became abandoned or in which the proceedings were terminated and which application is referenced by either a published application, an application open to public inspection or an issued patent.
9. A record from this system of records may be disclosed, as a routine use, to a Federal, State, or local law enforcement agency, if the USPTO becomes aware of a violation or potential violation of law or regulation.

Electronic Patent Application Fee Transmittal

Application Number:	11241748
Filing Date:	29-Sep-2005
Title of Invention:	PHYSICAL LAYER TRANSMITTER FOR USE IN A BROADBAND LOCAL AREA NETWORK
First Named Inventor/Applicant Name:	Anton Monk
Filer:	Richard A. Bachand/Tara Sallee
Attorney Docket Number:	E040004USU2

Filed as Large Entity

Utility under 35 USC 111(a) Filing Fees

Description	Fee Code	Quantity	Amount	Sub-Total in USD($)
Basic Filing:				
Pages:				
Claims:				
Miscellaneous-Filing:				
Petition:				
Patent-Appeals-and-Interference:				
Post-Allowance-and-Post-Issuance:				
Certificate of Correction	1811	1	100	100
Extension-of-Time:				

Description	Fee Code	Quantity	Amount	Sub-Total in USD($)
Miscellaneous:				
			Total in USD ($)	**100**

Electronic Acknowledgement Receipt	
EFS ID:	18807485
Application Number:	11241748
International Application Number:	
Confirmation Number:	2829
Title of Invention:	PHYSICAL LAYER TRANSMITTER FOR USE IN A BROADBAND LOCAL AREA NETWORK
First Named Inventor/Applicant Name:	Anton Monk
Customer Number:	77330
Filer:	Richard A. Bachand/Tara Sallee
Filer Authorized By:	Richard A. Bachand
Attorney Docket Number:	E040004USU2
Receipt Date:	18-APR-2014
Filing Date:	29-SEP-2005
Time Stamp:	18:18:58
Application Type:	Utility under 35 USC 111(a)

Payment information:

Submitted with Payment	yes
Payment Type	Deposit Account
Payment was successfully received in RAM	$100
RAM confirmation Number	3497
Deposit Account	504613
Authorized User	

The Director of the USPTO is hereby authorized to charge indicated fees and credit any overpayment as follows:

Charge any Additional Fees required under 37 C.F.R. Section 1.16 (National application filing, search, and examination fees)

Charge any Additional Fees required under 37 C.F.R. Section 1.17 (Patent application and reexamination processing fees)

Charge any Additional Fees required under 37 C.F.R. Section 1.19 (Document supply fees)

Charge any Additional Fees required under 37 C.F.R. Section 1.20 (Post Issuance fees)

Charge any Additional Fees required under 37 C.F.R. Section 1.21 (Miscellaneous fees and charges)

File Listing:

Document Number	Document Description	File Name	File Size(Bytes)/ Message Digest	Multi Part /.zip	Pages (if appl.)
1	Request for Certificate of Correction	Certificate_of_Correction_8621539.pdf	164228 52d005bca299a5721fe6bd1111f7cafe78460d7a	no	2
Warnings:					
Information:					
2	Fee Worksheet (SB06)	fee-info.pdf	30055 5192948c49e5041525dbeb6870c0ebafb0705c1d	no	2
Warnings:					
Information:					
		Total Files Size (in bytes):	194283		

This Acknowledgement Receipt evidences receipt on the noted date by the USPTO of the indicated documents, characterized by the applicant, and including page counts, where applicable. It serves as evidence of receipt similar to a Post Card, as described in MPEP 503.

New Applications Under 35 U.S.C. 111
If a new application is being filed and the application includes the necessary components for a filing date (see 37 CFR 1.53(b)-(d) and MPEP 506), a Filing Receipt (37 CFR 1.54) will be issued in due course and the date shown on this Acknowledgement Receipt will establish the filing date of the application.

National Stage of an International Application under 35 U.S.C. 371
If a timely submission to enter the national stage of an international application is compliant with the conditions of 35 U.S.C. 371 and other applicable requirements a Form PCT/DO/EO/903 indicating acceptance of the application as a national stage submission under 35 U.S.C. 371 will be issued in addition to the Filing Receipt, in due course.

New International Application Filed with the USPTO as a Receiving Office
If a new international application is being filed and the international application includes the necessary components for an international filing date (see PCT Article 11 and MPEP 1810), a Notification of the International Application Number and of the International Filing Date (Form PCT/RO/105) will be issued in due course, subject to prescriptions concerning national security, and the date shown on this Acknowledgement Receipt will establish the international filing date of the application.

UNITED STATES PATENT AND TRADEMARK OFFICE

CERTIFICATE OF CORRECTION

PATENT NO. : 8,621,539 B1
APPLICATION NO. : 11/241748
DATED : December 31, 2013
INVENTOR(S) : Monk et al.

It is certified that error appears in the above-identified patent and that said Letters Patent is hereby corrected as shown below:

In the Claims

Claim 1, line 25, change “transmit” to --probe--.

Signed and Sealed this
Tenth Day of June, 2014

Michelle K. Lee

Michelle K. Lee
Deputy Director of the United States Patent and Trademark Office

UNITED STATES PATENT AND TRADEMARK OFFICE

CERTIFICATE OF CORRECTION

PATENT NO. : 8,621,539 B1
APPLICATION NO. : 11/241748
DATED : December 31, 2013
INVENTOR(S) : Monk et al.

It is certified that error appears in the above-identified patent and that said Letters Patent is hereby corrected as shown below:

In the Claims

Column 18, Claim 1, line 25, change “transmit” to --probe--.

This certificate supersedes the Certificate of Correction issued June 10, 2014.

Signed and Sealed this
Fifteenth Day of July, 2014

Michelle K. Lee

Michelle K. Lee
Deputy Director of the United States Patent and Trademark Office

PTO/SB/80 (11-08)
Approved for use through 11/30/2011. OMB 0651-0035
U.S. Patent and Trademark Office; U.S. DEPARTMENT OF COMMERCE
Under the Paperwork Reduction Act of 1995, no persons are required to respond to a collection of information unless it displays a valid OMB control number.

POWER OF ATTORNEY TO PROSECUTE APPLICATIONS BEFORE THE USPTO

I hereby revoke all previous powers of attorney given in the application identified in the attached statement under 37 CFR 3.73(b).

I hereby appoint:

☑ Practitioners associated with the Customer Number: 23446

OR

☐ Practitioner(s) named below (if more than ten patent practitioners are to be named, then a customer number must be used):

Name	Registration Number	Name	Registration Number

as attorney(s) or agent(s) to represent the undersigned before the United States Patent and Trademark Office (USPTO) in connection with any and all patent applications assigned only to the undersigned according to the USPTO assignment records or assignment documents attached to this form in accordance with 37 CFR 3.73(b).

Please change the correspondence address for the application identified in the attached statement under 37 CFR 3.73(b) to:

☑ The address associated with Customer Number: 23446

OR

☐ Firm or Individual Name			
Address			
City		State	Zip
Country			
Telephone		Email	

Assignee Name and Address:

Entropic Communications, LLC.
2051 Palomar Airport Road, Suite 100
Carlsbad, CA 92011

A copy of this form, together with a statement under 37 CFR 3.73(b) (Form PTO/SB/96 or equivalent) is required to be filed in each application in which this form is used. The statement under 37 CFR 3.73(b) may be completed by one of the practitioners appointed in this form if the appointed practitioner is authorized to act on behalf of the assignee, and must identify the application in which this Power of Attorney is to be filed.

SIGNATURE of Assignee of Record

The individual whose signature and title is supplied below is authorized to act on behalf of the assignee

Signature		Date	6/5/15
Name	Adam Spice	Telephone	
Title	Chief Finanical Officer		

This collection of information is required by 37 CFR 1.31, 1.32 and 1.33. The information is required to obtain or retain a benefit by the public which is to file (and by the USPTO to process) an application. Confidentiality is governed by 35 U.S.C. 122 and 37 CFR 1.11 and 1.14. This collection is estimated to take 3 minutes to complete, including gathering, preparing, and submitting the completed application form to the USPTO. Time will vary depending upon the individual case. Any comments on the amount of time you require to complete this form and/or suggestions for reducing this burden, should be sent to the Chief Information Officer, U.S. Patent and Trademark Office, U.S. Department of Commerce, P.O. Box 1450, Alexandria, VA 22313-1450. DO NOT SEND FEES OR COMPLETED FORMS TO THIS ADDRESS. **SEND TO: Commissioner for Patents, P.O. Box 1450, Alexandria, VA 22313-1450.**

If you need assistance in completing the form, call 1-800-PTO-9199 and select option 2.

Privacy Act Statement

The **Privacy Act of 1974 (P.L. 93-579)** requires that you be given certain information in connection with your submission of the attached form related to a patent application or patent. Accordingly, pursuant to the requirements of the Act, please be advised that: (1) the general authority for the collection of this information is 35 U.S.C. 2(b)(2); (2) furnishing of the information solicited is voluntary; and (3) the principal purpose for which the information is used by the U.S. Patent and Trademark Office is to process and/or examine your submission related to a patent application or patent. If you do not furnish the requested information, the U.S. Patent and Trademark Office may not be able to process and/or examine your submission, which may result in termination of proceedings or abandonment of the application or expiration of the patent.

The information provided by you in this form will be subject to the following routine uses:

1. The information on this form will be treated confidentially to the extent allowed under the Freedom of Information Act (5 U.S.C. 552) and the Privacy Act (5 U.S.C 552a). Records from this system of records may be disclosed to the Department of Justice to determine whether disclosure of these records is required by the Freedom of Information Act.
2. A record from this system of records may be disclosed, as a routine use, in the course of presenting evidence to a court, magistrate, or administrative tribunal, including disclosures to opposing counsel in the course of settlement negotiations.
3. A record in this system of records may be disclosed, as a routine use, to a Member of Congress submitting a request involving an individual, to whom the record pertains, when the individual has requested assistance from the Member with respect to the subject matter of the record.
4. A record in this system of records may be disclosed, as a routine use, to a contractor of the Agency having need for the information in order to perform a contract. Recipients of information shall be required to comply with the requirements of the Privacy Act of 1974, as amended, pursuant to 5 U.S.C. 552a(m).
5. A record related to an International Application filed under the Patent Cooperation Treaty in this system of records may be disclosed, as a routine use, to the International Bureau of the World Intellectual Property Organization, pursuant to the Patent Cooperation Treaty.
6. A record in this system of records may be disclosed, as a routine use, to another federal agency for purposes of National Security review (35 U.S.C. 181) and for review pursuant to the Atomic Energy Act (42 U.S.C. 218(c)).
7. A record from this system of records may be disclosed, as a routine use, to the Administrator, General Services, or his/her designee, during an inspection of records conducted by GSA as part of that agency's responsibility to recommend improvements in records management practices and programs, under authority of 44 U.S.C. 2904 and 2906. Such disclosure shall be made in accordance with the GSA regulations governing inspection of records for this purpose, and any other relevant (*i.e.*, GSA or Commerce) directive. Such disclosure shall not be used to make determinations about individuals.
8. A record from this system of records may be disclosed, as a routine use, to the public after either publication of the application pursuant to 35 U.S.C. 122(b) or issuance of a patent pursuant to 35 U.S.C. 151. Further, a record may be disclosed, subject to the limitations of 37 CFR 1.14, as a routine use, to the public if the record was filed in an application which became abandoned or in which the proceedings were terminated and which application is referenced by either a published application, an application open to public inspection or an issued patent.
9. A record from this system of records may be disclosed, as a routine use, to a Federal, State, or local law enforcement agency, if the USPTO becomes aware of a violation or potential violation of law or regulation.

Electronic Acknowledgement Receipt

EFS ID:	23023559
Application Number:	11241748
International Application Number:	
Confirmation Number:	2829
Title of Invention:	PHYSICAL LAYER TRANSMITTER FOR USE IN A BROADBAND LOCAL AREA NETWORK
First Named Inventor/Applicant Name:	Anton Monk
Customer Number:	77330
Filer:	Christopher C. Winslade/Deb Wilson
Filer Authorized By:	Christopher C. Winslade
Attorney Docket Number:	E040004USU2
Receipt Date:	25-JUL-2015
Filing Date:	29-SEP-2005
Time Stamp:	12:08:00
Application Type:	Utility under 35 USC 111(a)

Payment information:

Submitted with Payment	no

File Listing:

Document Number	Document Description	File Name	File Size(Bytes)/ Message Digest	Multi Part /.zip	Pages (if appl.)
1	Assignee showing of ownership per 37 CFR 3.73	29239US01_373b_Statement_sb96.pdf	431707 e9ab1201ebbf66dad1f154376efd44d31bd932f5	no	2

Warnings:

Information:

2	Power of Attorney	Entropic_POA_PreAIA.pdf	340881 8107f4c6d5473b527f97e45769199b81a37aad1b	no	2
Warnings:					
Information:					
		Total Files Size (in bytes):	772588		

This Acknowledgement Receipt evidences receipt on the noted date by the USPTO of the indicated documents, characterized by the applicant, and including page counts, where applicable. It serves as evidence of receipt similar to a Post Card, as described in MPEP 503.

<u>New Applications Under 35 U.S.C. 111</u>
If a new application is being filed and the application includes the necessary components for a filing date (see 37 CFR 1.53(b)-(d) and MPEP 506), a Filing Receipt (37 CFR 1.54) will be issued in due course and the date shown on this Acknowledgement Receipt will establish the filing date of the application.

<u>National Stage of an International Application under 35 U.S.C. 371</u>
If a timely submission to enter the national stage of an international application is compliant with the conditions of 35 U.S.C. 371 and other applicable requirements a Form PCT/DO/EO/903 indicating acceptance of the application as a national stage submission under 35 U.S.C. 371 will be issued in addition to the Filing Receipt, in due course.

<u>New International Application Filed with the USPTO as a Receiving Office</u>
If a new international application is being filed and the international application includes the necessary components for an international filing date (see PCT Article 11 and MPEP 1810), a Notification of the International Application Number and of the International Filing Date (Form PCT/RO/105) will be issued in due course, subject to prescriptions concerning national security, and the date shown on this Acknowledgement Receipt will establish the international filing date of the application.

PTO/SB/96 (07-09)
Approved for use through 07/31/2012. OMB 0651-0031
U.S. Patent and Trademark Office; U.S. DEPARTMENT OF COMMERCE
Under the Paperwork Reduction Act of 1995, no persons are required to respond to a collection of information unless it displays a valid OMB control number.

STATEMENT UNDER 37 CFR 3.73(b)

Applicant/Patent Owner: Anton Monk, Ron Porat, Wee-Peng Goh, Magnus Berggren, Ron Lee, Edward Warner, Brett Bern

Application No./Patent No.: 8,621,539 Filed/Issue Date: 12/31/2013

Titled: PHYSICAL LAYER TRANSMITTER FOR USE IN A BROADBAND LOCAL AREA NETWORK

Entropic Communications, LLC, a corporation
(Name of Assignee) (Type of Assignee, e.g., corporation, partnership, university, government agency, etc.

states that it is:

1. [X] the assignee of the entire right, title, and interest in;

2. [ ] an assignee of less than the entire right, title, and interest in
(The extent (by percentage) of its ownership interest is _____ %); or

3. [ ] the assignee of an undivided interest in the entirety of (a complete assignment from one of the joint inventors was made)

the patent application/patent identified above, by virtue of either:

A. [ ] An assignment from the inventor(s) of the patent application/patent identified above. The assignment was recorded in the United States Patent and Trademark Office at Reel _____, Frame _____, or for which a copy therefore is attached.

OR

B. [X] A chain of title from the inventor(s), of the patent application/patent identified above, to the current assignee as follows:

1. From: Anton Monk, Ron Porat, Wee-Peng Goh, Magr To: ENTROPIC COMMUNICATIONS, INC.
The document was recorded in the United States Patent and Trademark Office at
Reel 017319, Frame 0389, or for which a copy thereof is attached.

2. From: EXCALIBUR ACQUISITION CORPORATION a To: ENTROPIC COMMUNICATIONS, INC.
The document was recorded in the United States Patent and Trademark Office at
Reel 035706, Frame 0267, or for which a copy thereof is attached.

3. From: ENTROPIC COMMUNICATIONS, INC. and EX To: ENTROPIC COMMUNICATIONS, LLC
The document was recorded in the United States Patent and Trademark Office at
Reel 035717, Frame 0628, or for which a copy thereof is attached.

[ ] Additional documents in the chain of title are listed on a supplemental sheet(s).

[X] As required by 37 CFR 3.73(b)(1)(i), the documentary evidence of the chain of title from the original owner to the assignee was, or concurrently is being, submitted for recordation pursuant to 37 CFR 3.11.

[NOTE: A separate copy (*i.e.*, a true copy of the original assignment document(s)) must be submitted to Assignment Division in accordance with 37 CFR Part 3, to record the assignment in the records of the USPTO. See MPEP 302.08]

The undersigned (whose title is supplied below) is authorized to act on behalf of the assignee.

/Christopher C. Winslade/	07/25/2015
Signature	Date
Christopher C. Winslade, Reg. No. 36308	Attorney for Applicant
Printed or Typed Name	Title

This collection of information is required by 37 CFR 3.73(b). The information is required to obtain or retain a benefit by the public which is to file (and by the USPTO to process) an application. Confidentiality is governed by 35 U.S.C. 122 and 37 CFR 1.11 and 1.14. This collection is estimated to take 12 minutes to complete, including gathering, preparing, and submitting the completed application form to the USPTO. Time will vary depending upon the individual case. Any comments on the amount of time you require to complete this form and/or suggestions for reducing this burden, should be sent to the Chief Information Officer, U.S. Patent and Trademark Office, U.S. Department of Commerce, P.O. Box 1450, Alexandria, VA 22313-1450. DO NOT SEND FEES OR COMPLETED FORMS TO THIS ADDRESS. **SEND TO: Commissioner for Patents, P.O. Box 1450, Alexandria, VA 22313-1450.**

If you need assistance in completing the form, call 1-800-PTO-9199 and select option 2.

Privacy Act Statement

The **Privacy Act of 1974 (P.L. 93-579)** requires that you be given certain information in connection with your submission of the attached form related to a patent application or patent. Accordingly, pursuant to the requirements of the Act, please be advised that: (1) the general authority for the collection of this information is 35 U.S.C. 2(b)(2); (2) furnishing of the information solicited is voluntary; and (3) the principal purpose for which the information is used by the U.S. Patent and Trademark Office is to process and/or examine your submission related to a patent application or patent. If you do not furnish the requested information, the U.S. Patent and Trademark Office may not be able to process and/or examine your submission, which may result in termination of proceedings or abandonment of the application or expiration of the patent.

The information provided by you in this form will be subject to the following routine uses:

1. The information on this form will be treated confidentially to the extent allowed under the Freedom of Information Act (5 U.S.C. 552) and the Privacy Act (5 U.S.C 552a). Records from this system of records may be disclosed to the Department of Justice to determine whether disclosure of these records is required by the Freedom of Information Act.
2. A record from this system of records may be disclosed, as a routine use, in the course of presenting evidence to a court, magistrate, or administrative tribunal, including disclosures to opposing counsel in the course of settlement negotiations.
3. A record in this system of records may be disclosed, as a routine use, to a Member of Congress submitting a request involving an individual, to whom the record pertains, when the individual has requested assistance from the Member with respect to the subject matter of the record.
4. A record in this system of records may be disclosed, as a routine use, to a contractor of the Agency having need for the information in order to perform a contract. Recipients of information shall be required to comply with the requirements of the Privacy Act of 1974, as amended, pursuant to 5 U.S.C. 552a(m).
5. A record related to an International Application filed under the Patent Cooperation Treaty in this system of records may be disclosed, as a routine use, to the International Bureau of the World Intellectual Property Organization, pursuant to the Patent Cooperation Treaty.
6. A record in this system of records may be disclosed, as a routine use, to another federal agency for purposes of National Security review (35 U.S.C. 181) and for review pursuant to the Atomic Energy Act (42 U.S.C. 218(c)).
7. A record from this system of records may be disclosed, as a routine use, to the Administrator, General Services, or his/her designee, during an inspection of records conducted by GSA as part of that agency's responsibility to recommend improvements in records management practices and programs, under authority of 44 U.S.C. 2904 and 2906. Such disclosure shall be made in accordance with the GSA regulations governing inspection of records for this purpose, and any other relevant (*i.e.*, GSA or Commerce) directive. Such disclosure shall not be used to make determinations about individuals.
8. A record from this system of records may be disclosed, as a routine use, to the public after either publication of the application pursuant to 35 U.S.C. 122(b) or issuance of a patent pursuant to 35 U.S.C. 151. Further, a record may be disclosed, subject to the limitations of 37 CFR 1.14, as a routine use, to the public if the record was filed in an application which became abandoned or in which the proceedings were terminated and which application is referenced by either a published application, an application open to public inspection or an issued patent.
9. A record from this system of records may be disclosed, as a routine use, to a Federal, State, or local law enforcement agency, if the USPTO becomes aware of a violation or potential violation of law or regulation.

UNITED STATES PATENT AND TRADEMARK OFFICE

UNITED STATES DEPARTMENT OF COMMERCE
United States Patent and Trademark Office
Address: COMMISSIONER FOR PATENTS
P.O. Box 1450
Alexandria, Virginia 22313-1450
www.uspto.gov

APPLICATION NUMBER	FILING OR 371(C) DATE	FIRST NAMED APPLICANT	ATTY. DOCKET NO./TITLE
11/241,748	09/29/2005	Anton Monk	E040004USU2

CONFIRMATION NO. 2829

77330
ENTROPIC COMMUNICATIONS, INC.
6350 SEQUENCE DRIVE
SAN DIEGO, CA 92121

POWER OF ATTORNEY NOTICE

OC000000076519474

Date Mailed: 07/28/2015

NOTICE REGARDING CHANGE OF POWER OF ATTORNEY

This is in response to the Power of Attorney filed 07/25/2015.

- The Power of Attorney to you in this application has been revoked by the assignee who has intervened as provided by 37 CFR 3.71. Future correspondence will be mailed to the new address of record(37 CFR 1.33).

Questions about the contents of this notice and the requirements it sets forth should be directed to the Office of Data Management, Application Assistance Unit, at **(571) 272-4000** or **(571) 272-4200** or **1-888-786-0101**.

/dtvernon/

UNITED STATES PATENT AND TRADEMARK OFFICE

UNITED STATES DEPARTMENT OF COMMERCE
United States Patent and Trademark Office
Address: COMMISSIONER FOR PATENTS
P.O. Box 1450
Alexandria, Virginia 22313-1450
www.uspto.gov

APPLICATION NUMBER	FILING OR 371(C) DATE	FIRST NAMED APPLICANT	ATTY. DOCKET NO./TITLE
11/241,748	09/29/2005	Anton Monk	

CONFIRMATION NO. 2829

POA ACCEPTANCE LETTER

23446
MCANDREWS HELD & MALLOY, LTD
500 WEST MADISON STREET
SUITE 3400
CHICAGO, IL 60661

OC000000076519489

Date Mailed: 07/28/2015

NOTICE OF ACCEPTANCE OF POWER OF ATTORNEY

This is in response to the Power of Attorney filed 07/25/2015.

The Power of Attorney in this application is accepted. Correspondence in this application will be mailed to the above address as provided by 37 CFR 1.33.

Questions about the contents of this notice and the requirements it sets forth should be directed to the Office of Data Management, Application Assistance Unit, at **(571) 272-4000** or **(571) 272-4200** or **1-888-786-0101**.

/dtvernon/

PTO/AIA/80 (07-17)
Approved for use through 03/31/2021. OMB 0651-0035
U.S. Patent and Trademark Office; U.S. DEPARTMENT OF COMMERCE
Under the Paperwork Reduction Act of 1995, no person is required to respond to a collection of information unless it displays a valid OMB control number

POWER OF ATTORNEY TO PROSECUTE APPLICATIONS BEFORE THE USPTO

I hereby revoke all previous powers of attorney given in the application identified in the attached statement under 37 CFR 3.73(c).

I hereby appoint:

[X] Practitioners associated with Customer Number: 23,446

OR

[ ] Practitioner(s) named below (if more than ten patent practitioners are to be named, then a customer number must be used):

Name	Registration Number	Name	Registration Number

As attorney(s) or agent(s) to represent the undersigned before the United States Patent and Trademark Office (USPTO) in connection with any and all patent applications assigned only to the undersigned according to the USPTO assignment records or assignment documents attached to this form in accordance with 37 CFR 3.73(c).

Please change the correspondence address for the application identified in the attached statement under 37 CFR 3.73(c) to:

[X] The address associated with Customer Number: 23,446

OR

[ ]

Firm or individual name		
Address		
City	State	Zip
Country		
Telephone	Email	

Assignee name and address: ENTROPIC COMMUNICATIONS, LLC
1345 AVENUE OF THE AMERICAS, 46TH FLOOR
NEW YORK, NY 10105

A copy of this form, together with a statement under 37 CFR 3.73(c) (Form PTO/AIA/96 or equivalent) is required to be filed in each application in which this form is used. The statement under 37 CFR 3.73(c) may be completed by one of the practitioners appointed in this form, and must identify the application in which this Power of Attorney is to be filed.

SIGNATURE of Assignee of Record

The individual whose signature and title is supplied below is authorized to act on behalf of the assignee.

Signature /Andrea L. Gothing/	Date 2021-05-04
Name Andrea L. Gothing	Telephone 415-830-0613
Title Licensing Officer and Authorized Signatory, Entropic Communications, LLC	

This collection of information is required by 37 CFR 1.31, 1.32, and 1.33. The information is required to obtain or retain a benefit by the public, which is to update (and by the USPTO to process) the file of a patent or reexamination proceeding. Confidentiality is governed by 35 U.S.C. 122 and 37 CFR 1.11 and 1.14. This collection is estimated to take 18 minutes to complete, including gathering, preparing, and submitting the completed application form to the USPTO. Time will vary depending upon the individual case. Any comments on the amount of time you require to complete this form and/or suggestions for reducing this burden, should be sent to the Chief Information Officer, U.S. Patent and Trademark Office, U.S. Department of Commerce, P.O. Box 1450, Alexandria, VA 22313-1450. DO NOT SEND FEES OR COMPLETED FORMS TO THIS ADDRESS. **SEND TO: Commissioner for Patents, P.O. Box 1450, Alexandria, VA 22313-1450.**
If you need assistance in completing the form, call 1-800-PTO-9199 and select option 2.

Privacy Act Statement

The **Privacy Act of 1974 (P.L. 93-579)** requires that you be given certain information in connection with your submission of the attached form related to a patent application or patent. Accordingly, pursuant to the requirements of the Act, please be advised that: (1) the general authority for the collection of this information is 35 U.S.C. 2(b)(2); (2) furnishing of the information solicited is voluntary; and (3) the principal purpose for which the information is used by the U.S. Patent and Trademark Office is to process and/or examine your submission related to a patent application or patent. If you do not furnish the requested information, the U.S. Patent and Trademark Office may not be able to process and/or examine your submission, which may result in termination of proceedings or abandonment of the application or expiration of the patent.

The information provided by you in this form will be subject to the following routine uses:

1. The information on this form will be treated confidentially to the extent allowed under the Freedom of Information Act (5 U.S.C. 552) and the Privacy Act (5 U.S.C 552a). Records from this system of records may be disclosed to the Department of Justice to determine whether disclosure of these records is required by the Freedom of Information Act.
2. A record from this system of records may be disclosed, as a routine use, in the course of presenting evidence to a court, magistrate, or administrative tribunal, including disclosures to opposing counsel in the course of settlement negotiations.
3. A record in this system of records may be disclosed, as a routine use, to a Member of Congress submitting a request involving an individual, to whom the record pertains, when the individual has requested assistance from the Member with respect to the subject matter of the record.
4. A record in this system of records may be disclosed, as a routine use, to a contractor of the Agency having need for the information in order to perform a contract. Recipients of information shall be required to comply with the requirements of the Privacy Act of 1974, as amended, pursuant to 5 U.S.C. 552a(m).
5. A record related to an International Application filed under the Patent Cooperation Treaty in this system of records may be disclosed, as a routine use, to the International Bureau of the World Intellectual Property Organization, pursuant to the Patent Cooperation Treaty.
6. A record in this system of records may be disclosed, as a routine use, to another federal agency for purposes of National Security review (35 U.S.C. 181) and for review pursuant to the Atomic Energy Act (42 U.S.C. 218(c)).
7. A record from this system of records may be disclosed, as a routine use, to the Administrator, General Services, or his/her designee, during an inspection of records conducted by GSA as part of that agency's responsibility to recommend improvements in records management practices and programs, under authority of 44 U.S.C. 2904 and 2906. Such disclosure shall be made in accordance with the GSA regulations governing inspection of records for this purpose, and any other relevant (*i.e.*, GSA or Commerce) directive. Such disclosure shall not be used to make determinations about individuals.
8. A record from this system of records may be disclosed, as a routine use, to the public after either publication of the application pursuant to 35 U.S.C. 122(b) or issuance of a patent pursuant to 35 U.S.C. 151. Further, a record may be disclosed, subject to the limitations of 37 CFR 1.14, as a routine use, to the public if the record was filed in an application which became abandoned or in which the proceedings were terminated and which application is referenced by either a published application, an application open to public inspection or an issued patent.
9. A record from this system of records may be disclosed, as a routine use, to a Federal, State, or local law enforcement agency, if the USPTO becomes aware of a violation or potential violation of law or regulation.

Electronic Acknowledgement Receipt

EFS ID:	42984161
Application Number:	11241748
International Application Number:	
Confirmation Number:	2829
Title of Invention:	PHYSICAL LAYER TRANSMITTER FOR USE IN A BROADBAND LOCAL AREA NETWORK
First Named Inventor/Applicant Name:	Anton Monk
Customer Number:	23446
Filer:	Ronald H. Spuhler/Deborah Wilson
Filer Authorized By:	Ronald H. Spuhler
Attorney Docket Number:	
Receipt Date:	14-JUN-2021
Filing Date:	29-SEP-2005
Time Stamp:	22:13:01
Application Type:	Utility under 35 USC 111(a)

Payment information:

Submitted with Payment	no

File Listing:

Document Number	Document Description	File Name	File Size(Bytes)/ Message Digest	Multi Part /.zip	Pages (if appl.)
1	Assignee showing of ownership per 37 CFR 3.73	29239US02_373c_Statement.pdf	123911 ca74df5014cdac5d3f8a9aa9ad2f2e0dbdc84936	no	3

Warnings:

Information:					
2	Power of Attorney	Entropic-POA_General_Assignee_EntropicCommunications_ALG.pdf	487892 51444e06ae84b241bfc127dc47c5d6c646944dd7	no	2
Warnings:					
Information:					
			Total Files Size (in bytes):	611803	

This Acknowledgement Receipt evidences receipt on the noted date by the USPTO of the indicated documents, characterized by the applicant, and including page counts, where applicable. It serves as evidence of receipt similar to a Post Card, as described in MPEP 503.

New Applications Under 35 U.S.C. 111
If a new application is being filed and the application includes the necessary components for a filing date (see 37 CFR 1.53(b)-(d) and MPEP 506), a Filing Receipt (37 CFR 1.54) will be issued in due course and the date shown on this Acknowledgement Receipt will establish the filing date of the application.
National Stage of an International Application under 35 U.S.C. 371
If a timely submission to enter the national stage of an international application is compliant with the conditions of 35 U.S.C. 371 and other applicable requirements a Form PCT/DO/EO/903 indicating acceptance of the application as a national stage submission under 35 U.S.C. 371 will be issued in addition to the Filing Receipt, in due course.
New International Application Filed with the USPTO as a Receiving Office
If a new international application is being filed and the international application includes the necessary components for an international filing date (see PCT Article 11 and MPEP 1810), a Notification of the International Application Number and of the International Filing Date (Form PCT/RO/105) will be issued in due course, subject to prescriptions concerning national security, and the date shown on this Acknowledgement Receipt will establish the international filing date of the application.

PTO/AIA/96 (08-12)
Approved for use through 01/31/2013. OMB 0651-0031
U.S. Patent and Trademark Office; U.S. DEPARTMENT OF COMMERCE
Under the Paperwork Reduction Act of 1995, no persons are required to respond to a collection of information unless it displays a valid OMB control number.

STATEMENT UNDER 37 CFR 3.73(c)

Applicant/Patent Owner: ENTROPIC COMMUNICATIONS, LLC

Application No./Patent No.: 11/241,748 Filed/Issue Date: 2005-09-29

Titled: PHYSICAL LAYER TRANSMITTER FOR USE IN A BROADBAND LOCAL AREA NETWORK

ENTROPIC COMMUNICATIONS, LLC, a limited liability company

(Name of Assignee) (Type of Assignee, e.g., corporation, partnership, university, government agency, etc.)

states that, for the patent application/patent identified above, it is (choose **one** of options 1, 2, 3 or 4 below):

1. ☑ The assignee of the entire right, title, and interest.

2. ☐ An assignee of less than the entire right, title, and interest (check applicable box):

☐ The extent (by percentage) of its ownership interest is _____%. Additional Statement(s) by the owners holding the balance of the interest must be submitted to account for 100% of the ownership interest.

☐ There are unspecified percentages of ownership. The other parties, including inventors, who together own the entire right, title and interest are:

Additional Statement(s) by the owner(s) holding the balance of the interest must be submitted to account for the entire right, title, and interest.

3. ☐ The assignee of an undivided interest in the entirety (a complete assignment from one of the joint inventors was made). The other parties, including inventors, who together own the entire right, title, and interest are:

Additional Statement(s) by the owner(s) holding the balance of the interest must be submitted to account for the entire right, title, and interest.

4. ☐ The recipient, via a court proceeding or the like (*e.g.*, bankruptcy, probate), of an undivided interest in the entirety (a complete transfer of ownership interest was made). The certified document(s) showing the transfer is attached.

The interest identified in option 1, 2 or 3 above (not option 4) is evidenced by either (choose **one** of options A or B below):

A. ☐ An assignment from the inventor(s) of the patent application/patent identified above. The assignment was recorded in the United States Patent and Trademark Office at Reel _____, Frame _____, or for which a copy thereof is attached.

B. ☑ A chain of title from the inventor(s), of the patent application/patent identified above, to the current assignee as follows:

1. From: Anton Monk, Ron Porat, Wee-Peng Goh, Magnus Berggren, Ron Lee, Edward Warner, Brett Bernath, Yusuf Ozturk To: ENTROPIC COMMUNICATOINS, INC.

The document was recorded in the United States Patent and Trademark Office at Reel 017319, Frame 0389, or for which a copy thereof is attached.

2. From: EXCALIBUR ACQUISITION CORPORATION, ENTROPIC COMMUNICATIONS, INC. To: ENTROPIC COMMUNICATIONS, INC.

The document was recorded in the United States Patent and Trademark Office at Reel 035706, Frame 0267, or for which a copy thereof is attached.

This collection of information is required by 37 CFR 3.73(b). The information is required to obtain or retain a benefit by the public which is to file (and by the USPTO to process) an application. Confidentiality is governed by 35 U.S.C. 122 and 37 CFR 1.11 and 1.14. This collection is estimated to take 12 minutes to complete, including gathering, preparing, and submitting the completed application form to the USPTO. Time will vary depending upon the individual case. Any comments on the amount of time you require to complete this form and/or suggestions for reducing this burden, should be sent to the Chief Information Officer, U.S. Patent and Trademark Office, U.S. Department of Commerce, P.O. Box 1450, Alexandria, VA 22313-1450. DO NOT SEND FEES OR COMPLETED FORMS TO THIS ADDRESS. **SEND TO: Commissioner for Patents, P.O. Box 1450, Alexandria, VA 22313-1450**.

If you need assistance in completing the form, call 1-800-PTO-9199 and select option 2.

Under the Paperwork Reduction Act of 1995, no persons are required to respond to a collection of information unless it displays a valid OMB control number.

STATEMENT UNDER 37 CFR 3.73(c)

3. From: ENTROPIC COMMUNICATIONS, INC., EXCALIBUR SUBSIDIARY, LLC To: ENTROPIC COMMUNICATIONS, LLC

The document was recorded in the United States Patent and Trademark Office at
Reel 035717, Frame 0628, or for which a copy thereof is attached.

4. From: ENTROPIC COMMUNICATONS LLC To: MAXLINEAR COMMUNICATIONS LLC

The document was recorded in the United States Patent and Trademark Office at
Reel 055776, Frame 0482, or for which a copy thereof is attached.

5. From: MAXLINEAR COMMUNICATIONS LLC To: ENTROPIC COMMUNICATIONS, LLC

The document was recorded in the United States Patent and Trademark Office at
Reel 055899, Frame 0291, or for which a copy thereof is attached.

6. From: _____ To: _____

The document was recorded in the United States Patent and Trademark Office at
Reel _____, Frame _____, or for which a copy thereof is attached.

☐ Additional documents in the chain of title are listed on a supplemental sheet(s).

☑ As required by 37 CFR 3.73(c)(1)(i), the documentary evidence of the chain of title from the original owner to the assignee was, or concurrently is being, submitted for recordation pursuant to 37 CFR 3.11.

[NOTE: A separate copy (i.e., a true copy of the original assignment document(s)) must be submitted to Assignment Division in accordance with 37 CFR Part 3, to record the assignment in the records of the USPTO. See MPEP 302.08]

The undersigned (whose title is supplied below) is authorized to act on behalf of the assignee.

/Ronald H. Spuhler/	2021-06-14
Signature	Date
Ronald H. Spuhler	52245
Printed or Typed Name	Title or Registration Number

Privacy Act Statement

The **Privacy Act of 1974 (P.L. 93-579)** requires that you be given certain information in connection with your submission of the attached form related to a patent application or patent. Accordingly, pursuant to the requirements of the Act, please be advised that: (1) the general authority for the collection of this information is 35 U.S.C. 2(b)(2); (2) furnishing of the information solicited is voluntary; and (3) the principal purpose for which the information is used by the U.S. Patent and Trademark Office is to process and/or examine your submission related to a patent application or patent. If you do not furnish the requested information, the U.S. Patent and Trademark Office may not be able to process and/or examine your submission, which may result in termination of proceedings or abandonment of the application or expiration of the patent.

The information provided by you in this form will be subject to the following routine uses:

1. The information on this form will be treated confidentially to the extent allowed under the Freedom of Information Act (5 U.S.C. 552) and the Privacy Act (5 U.S.C 552a). Records from this system of records may be disclosed to the Department of Justice to determine whether disclosure of these records is required by the Freedom of Information Act.
2. A record from this system of records may be disclosed, as a routine use, in the course of presenting evidence to a court, magistrate, or administrative tribunal, including disclosures to opposing counsel in the course of settlement negotiations.
3. A record in this system of records may be disclosed, as a routine use, to a Member of Congress submitting a request involving an individual, to whom the record pertains, when the individual has requested assistance from the Member with respect to the subject matter of the record.
4. A record in this system of records may be disclosed, as a routine use, to a contractor of the Agency having need for the information in order to perform a contract. Recipients of information shall be required to comply with the requirements of the Privacy Act of 1974, as amended, pursuant to 5 U.S.C. 552a(m).
5. A record related to an International Application filed under the Patent Cooperation Treaty in this system of records may be disclosed, as a routine use, to the International Bureau of the World Intellectual Property Organization, pursuant to the Patent Cooperation Treaty.
6. A record in this system of records may be disclosed, as a routine use, to another federal agency for purposes of National Security review (35 U.S.C. 181) and for review pursuant to the Atomic Energy Act (42 U.S.C. 218(c)).
7. A record from this system of records may be disclosed, as a routine use, to the Administrator, General Services, or his/her designee, during an inspection of records conducted by GSA as part of that agency's responsibility to recommend improvements in records management practices and programs, under authority of 44 U.S.C. 2904 and 2906. Such disclosure shall be made in accordance with the GSA regulations governing inspection of records for this purpose, and any other relevant (*i.e.*, GSA or Commerce) directive. Such disclosure shall not be used to make determinations about individuals.
8. A record from this system of records may be disclosed, as a routine use, to the public after either publication of the application pursuant to 35 U.S.C. 122(b) or issuance of a patent pursuant to 35 U.S.C. 151. Further, a record may be disclosed, subject to the limitations of 37 CFR 1.14, as a routine use, to the public if the record was filed in an application which became abandoned or in which the proceedings were terminated and which application is referenced by either a published application, an application open to public inspection or an issued patent.
9. A record from this system of records may be disclosed, as a routine use, to a Federal, State, or local law enforcement agency, if the USPTO becomes aware of a violation or potential violation of law or regulation.

UNITED STATES PATENT AND TRADEMARK OFFICE

UNITED STATES DEPARTMENT OF COMMERCE
United States Patent and Trademark Office
Address: COMMISSIONER FOR PATENTS
P.O. Box 1450
Alexandria, Virginia 22313-1450
www.uspto.gov

APPLICATION NUMBER	FILING OR 371(C) DATE	FIRST NAMED APPLICANT	ATTY. DOCKET NO./TITLE
11/241,748	09/29/2005	Anton Monk	

CONFIRMATION NO. 2829

POA ACCEPTANCE LETTER

23446
MCANDREWS HELD & MALLOY, LTD
500 WEST MADISON STREET
SUITE 3400
CHICAGO, IL 60661

OC000000126319340

Date Mailed: 06/16/2021

NOTICE OF ACCEPTANCE OF POWER OF ATTORNEY

This is in response to the Power of Attorney filed 06/14/2021.

The Power of Attorney in this application is accepted. Correspondence in this application will be mailed to the above address as provided by 37 CFR 1.33.

Questions about the contents of this notice and the requirements it sets forth should be directed to the Office of Data Management, Application Assistance Unit, at **(571) 272-4000** or **(571) 272-4200** or **1-888-786-0101**.

/nrhayden/