US007363038B2

(12) **United States Patent**
Kim et al.

(10) **Patent No.: US 7,363,038 B2**
(45) **Date of Patent: Apr. 22, 2008**

(54) **SYSTEM AND METHOD FOR PERFORMING HANDOVER OPERATION IN BROADBAND WIRELESS ACCESS COMMUNICATION SYSTEM**

(75) Inventors: **So-Hyun Kim**, Suwon-si (KR); **Chang-Hoi Koo**, Seongnam-si (KR); **Jung-Je Son**, Seongnam-si (KR)

(73) Assignee: **Samsung Electronics Co., Ltd** (KR)

(*) Notice: Subject to any disclaimer, the term of this patent is extended or adjusted under 35 U.S.C. 154(b) by 773 days.

(21) Appl. No.: **10/795,932**

(22) Filed: **Mar. 8, 2004**

(65) **Prior Publication Data**

US 2004/0185853 A1 Sep. 23, 2004

(30) **Foreign Application Priority Data**

Mar. 8, 2003 (KR) 10-2003-0014641

(51) **Int. Cl.**
H04Q 7/20 (2006.01)

(52) **U.S. Cl.** **455/438**; 455/437; 455/436

(58) **Field of Classification Search** 455/438, 455/436, 437, 439, 440, 441, 442; 370/331, 370/332

See application file for complete search history.

(56) **References Cited**

U.S. PATENT DOCUMENTS

6,577,868 B1 * 6/2003 Vialen et al. 455/441
6,990,344 B1 * 1/2006 Dolan et al. 455/437

FOREIGN PATENT DOCUMENTS

EP 0 902 551 3/1999
WO WO 99/43178 8/1999

OTHER PUBLICATIONS

Chuah et al., "Integrated Dynamic Radio Resource Management", Vehicular Technology Conference, 1995 IEEE 45th, vol. 2, Jul. 25-28, 1995, pp. 584-588.

Chuah et al., "Evaluation of a Minimum Power Handoff Algorithm", Personal, Indoor and Mobile Radio Communications, 1995, PIMRC'95, Wireless: Merging onto the Information Superhighway, Sixth IEEE International Symposium on, vol. 2, Sep. 27-29, 1995, pp. 814-818.

(Continued)

Primary Examiner—Melur Ramakrishnaiah
(74) *Attorney, Agent, or Firm*—The Farrell Law Firm, PC

(57) **ABSTRACT**

A system and method for performing a handover operation in a broadband wireless access (BWA) communication system. The BWA communication system includes a serving BS (Base Station), (Subscriber Station), and a plurality of neighbor BSs adjacent to the serving BS. The SS handover method upon receiving a handover request from the SS in the BWA communication system includes the steps of: a) receiving from the serving BS information of the plurality of neighbor BSs; b) measuring CINRs (Carrier to Interference and Noise Ratios) of pilot signals transferred from the neighbor BSs upon receipt of the neighbor BSs information; c) transmitting to the serving BS a handover request signal along with pilot signal CINR information of the neighbor BSs; d) upon receipt of the handover request signal, receiving from the serving BS information of a handover enable target BS contained in the neighbor BSs; and e) performing a handover function from the serving BS to the target BS.

36 Claims, 11 Drawing Sheets

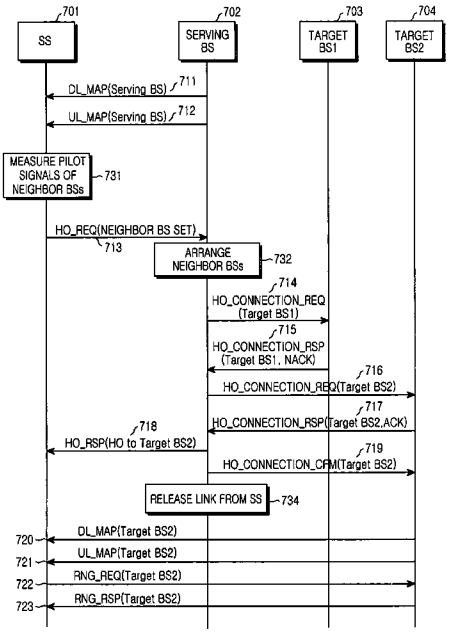

DISH 1031

OTHER PUBLICATIONS

Meulenhof et al., "Handover in a High-Speed Wireless ATM Based LAN", Vehicular Technology Conference, 1999, IEEE VTS 50th, vol. 3, Sep. 19-22, 1999, pp. 1730-1734.

Kitroser et al., "IEEE 802.16e Mobility Enhancements", Jan. 2003.

Kitroser, "IEEE 802.16e Handoff Draft", Mar. 2003.

* cited by examiner

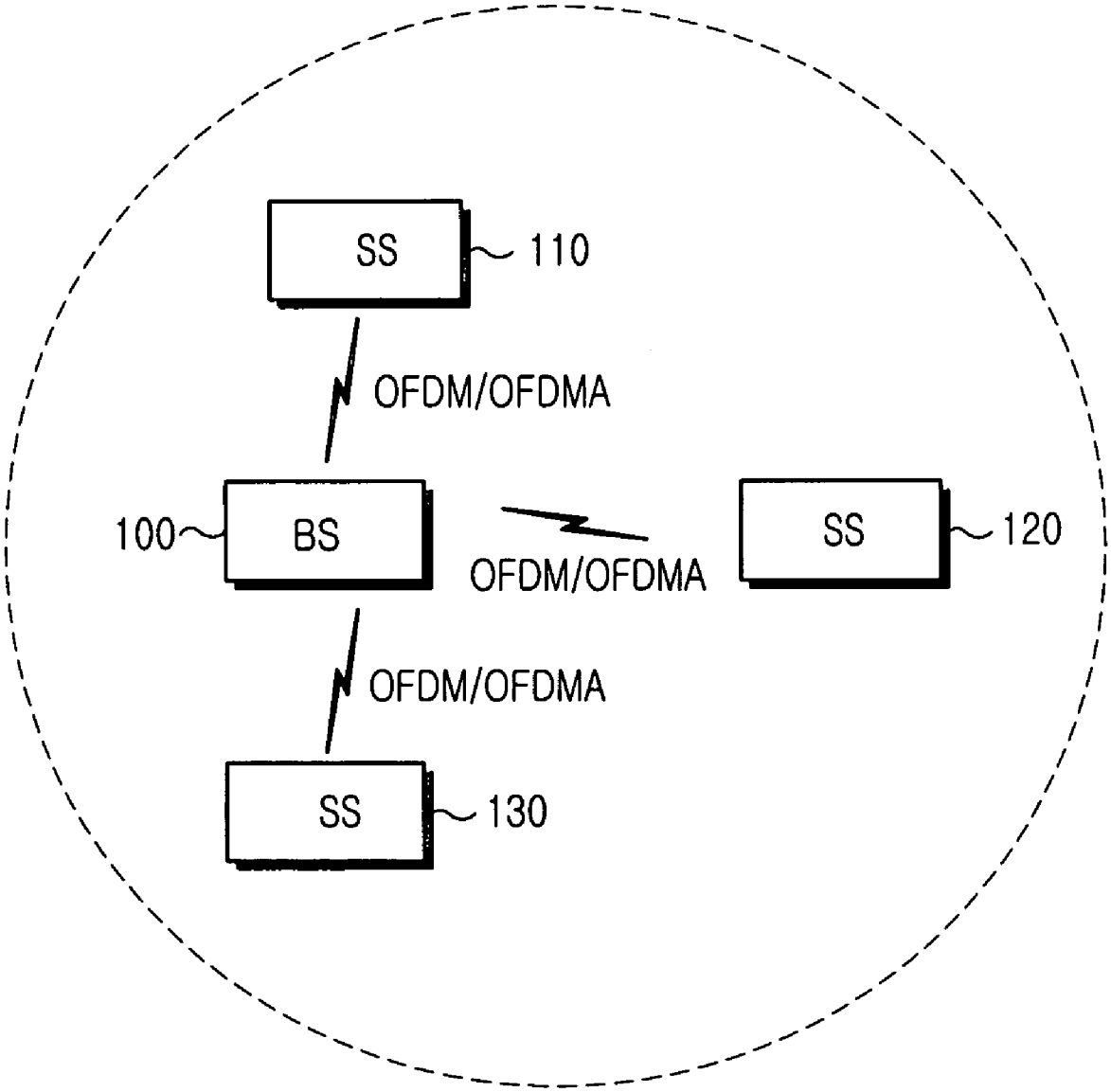

FIG.1
(PRIOR ART)

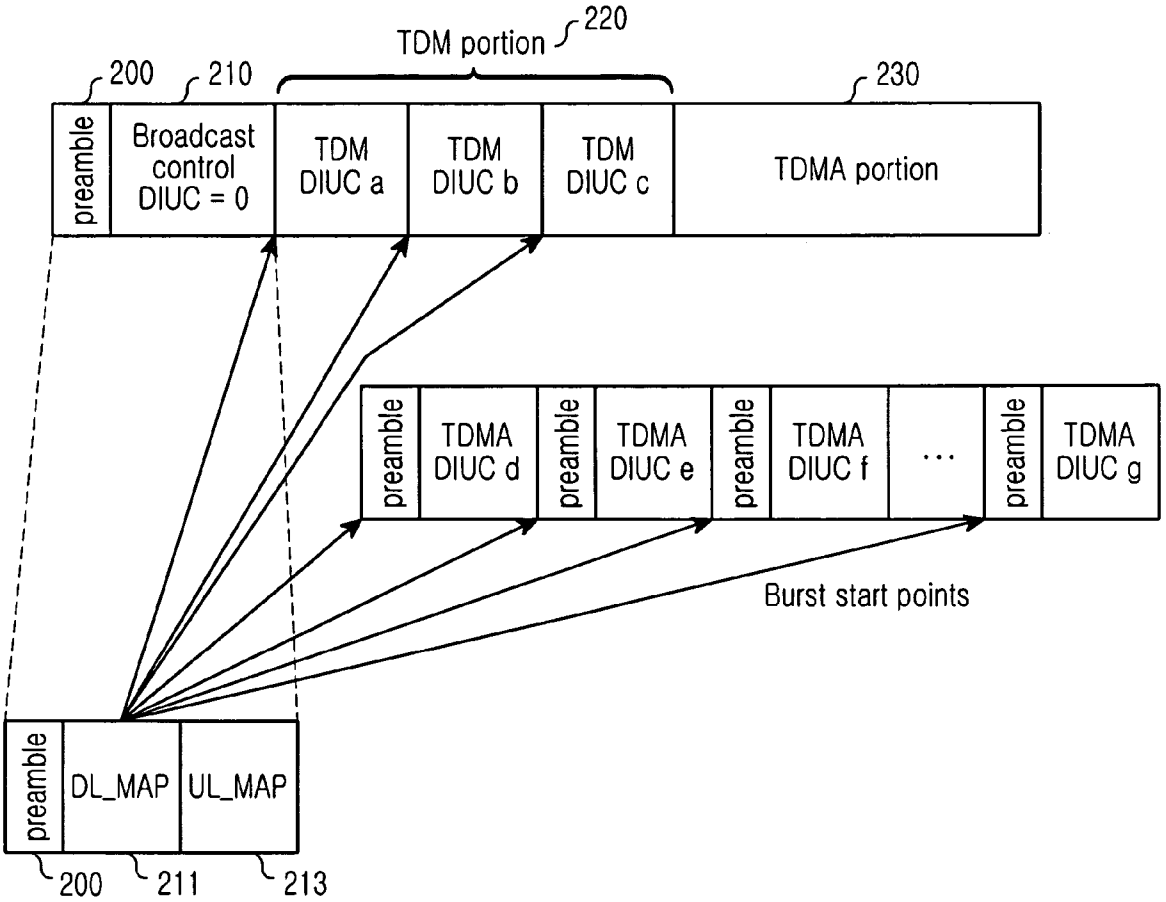

FIG.2
(PRIOR ART)

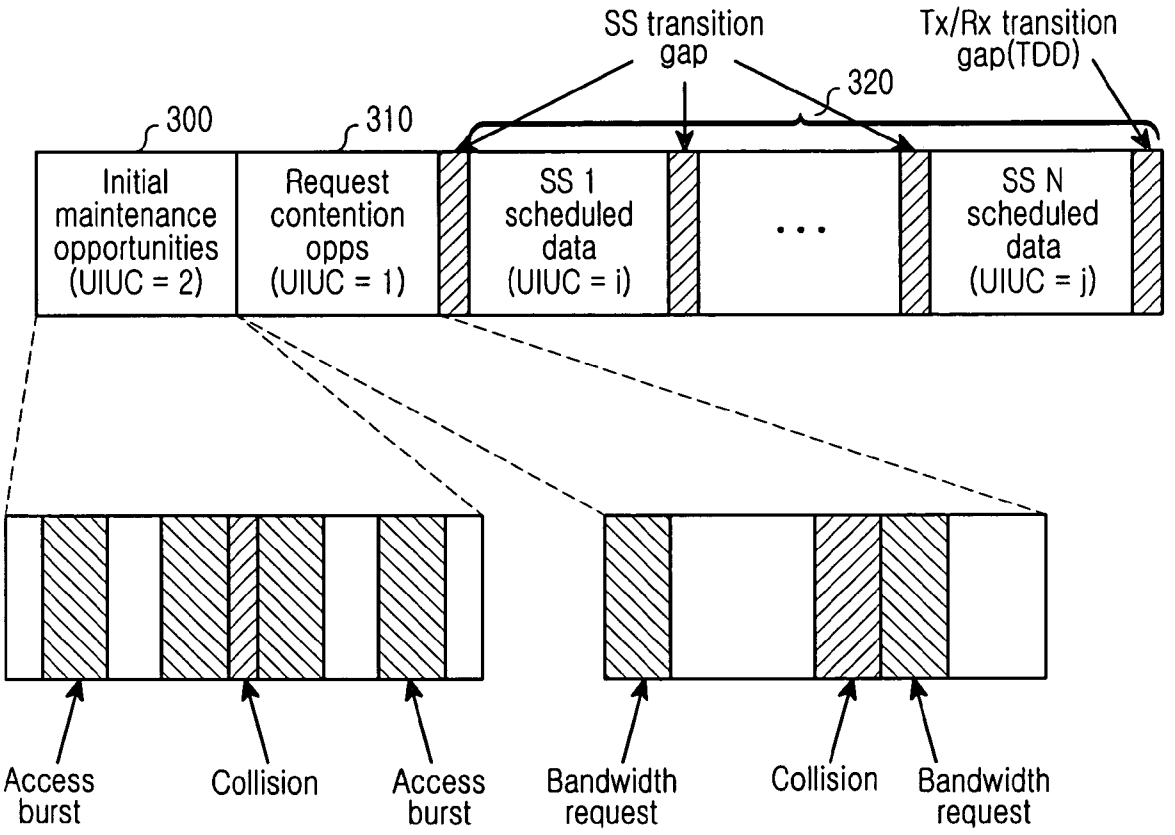

FIG.3
(PRIOR ART)

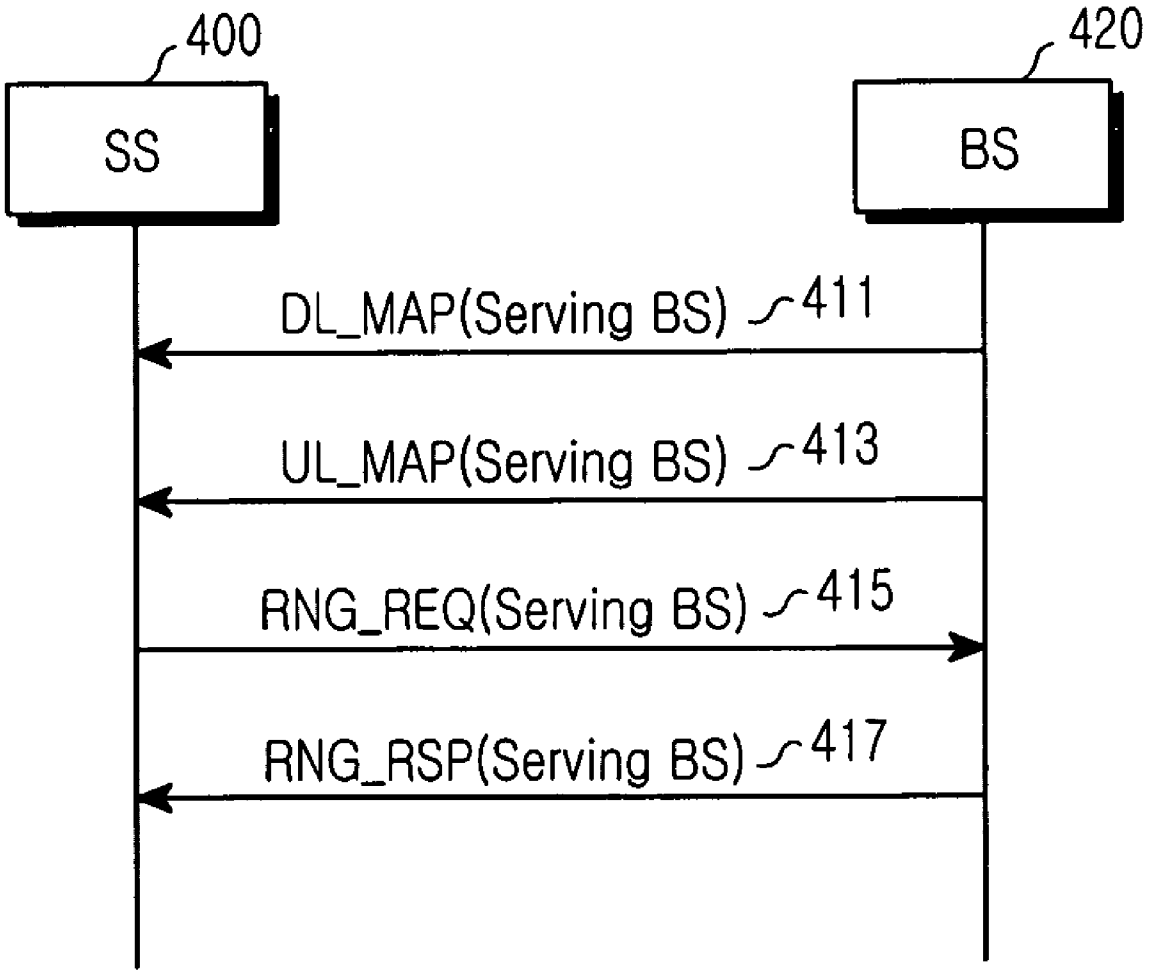
400
420
SS
BS
DL_MAP(Serving BS)
411
UL_MAP(Serving BS)
413
RNG_REQ(Serving BS)
415
RNG_RSP(Serving BS)
417

FIG.4

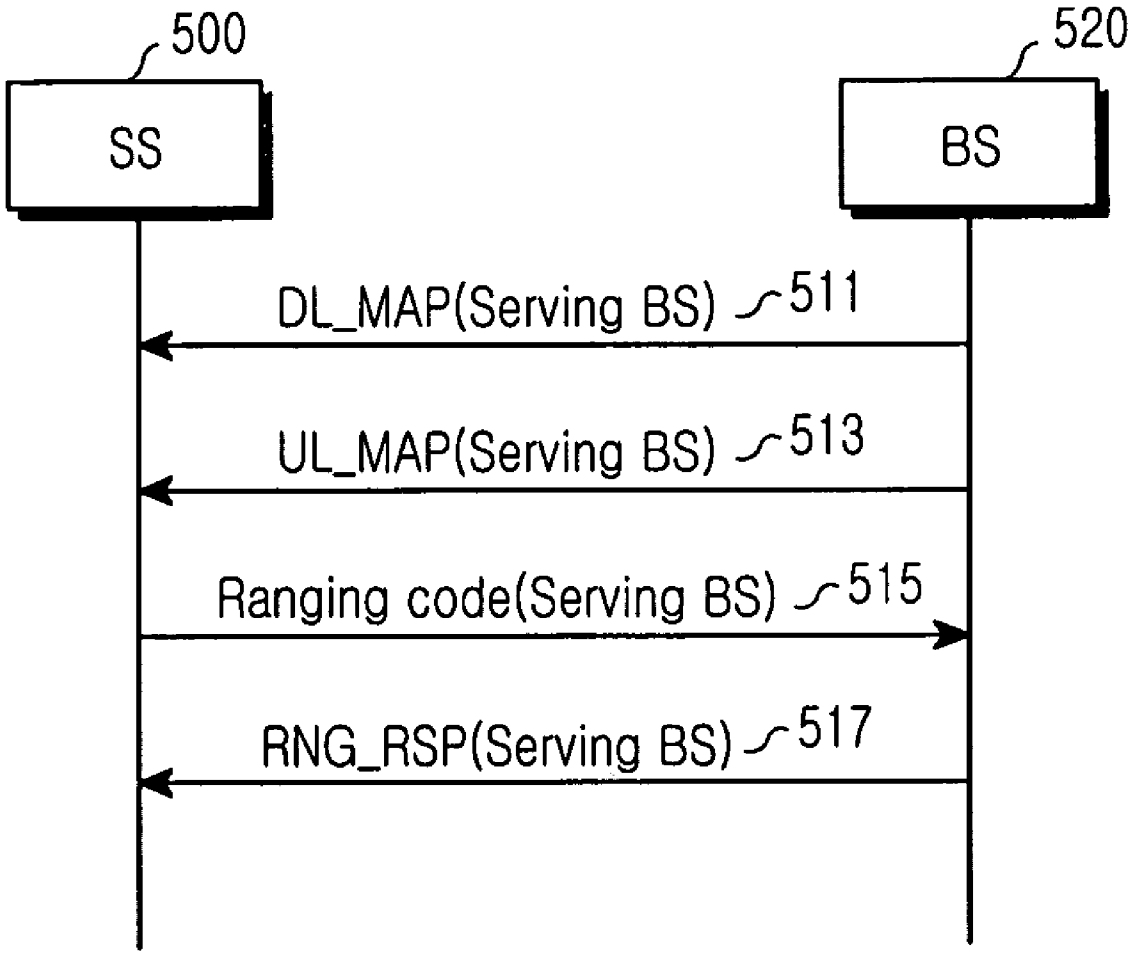
500
520
SS
BS
DL_MAP(Serving BS)
511
UL_MAP(Serving BS)
513
Ranging code(Serving BS)
515
RNG_RSP(Serving BS)
517

FIG.5

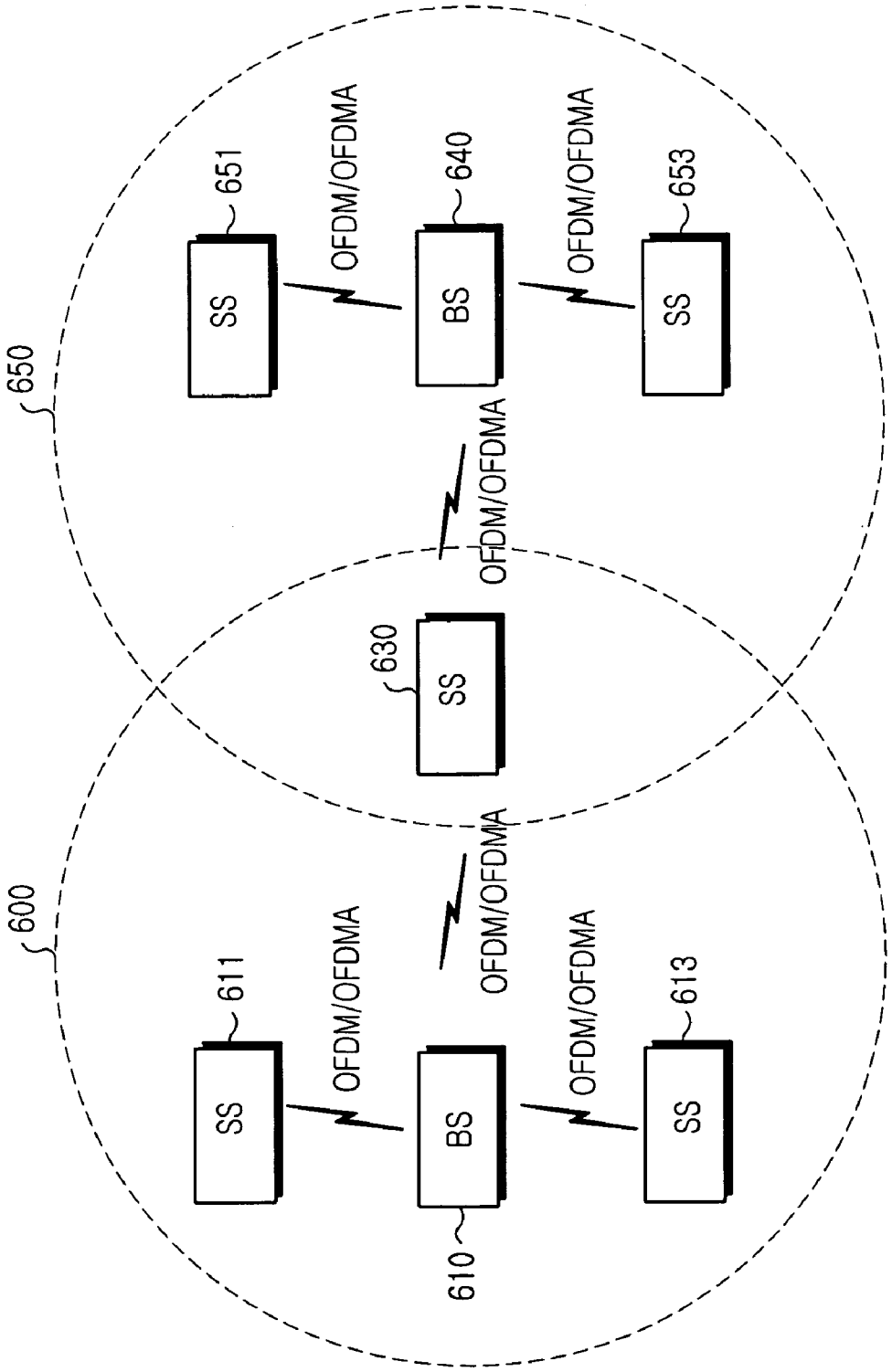
650
651
SS
OFDM/OFDMA
640
BS
OFDM/OFDMA
653
SS
OFDM/OFDMA
630
SS
600
611
SS
OFDM/OFDMA
OFDM/OFDMA
610
BS
OFDM/OFDMA
613
SS

FIG.6

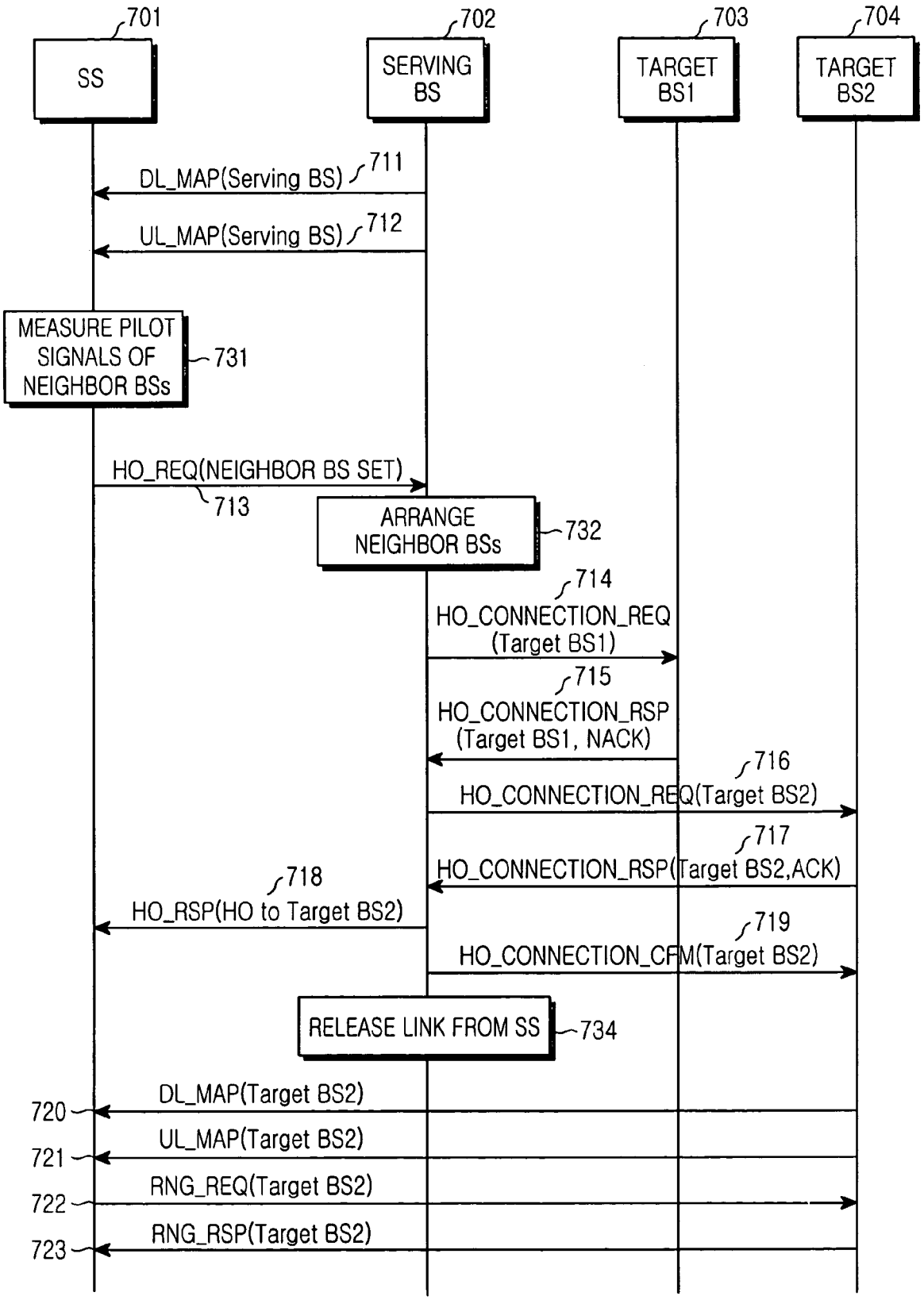
701
SS
702
SERVING BS
703
TARGET BS1
704
TARGET BS2
DL_MAP(Serving BS)
711
UL_MAP(Serving BS)
712
MEASURE PILOT SIGNALS OF NEIGHBOR BSs
731
HO_REQ(NEIGHBOR BS SET)
713
ARRANGE NEIGHBOR BSs
732
714
HO_CONNECTION_REQ (Target BS1)
715
HO_CONNECTION_RSP (Target BS1, NACK)
716
HO_CONNECTION_REQ(Target BS2)
717
HO_CONNECTION_RSP(Target BS2,ACK)
718
HO_RSP(HO to Target BS2)
719
HO_CONNECTION_CFM(Target BS2)
RELEASE LINK FROM SS
734
DL_MAP(Target BS2)
720
UL_MAP(Target BS2)
721
RNG_REQ(Target BS2)
722
RNG_RSP(Target BS2)
723

FIG.7

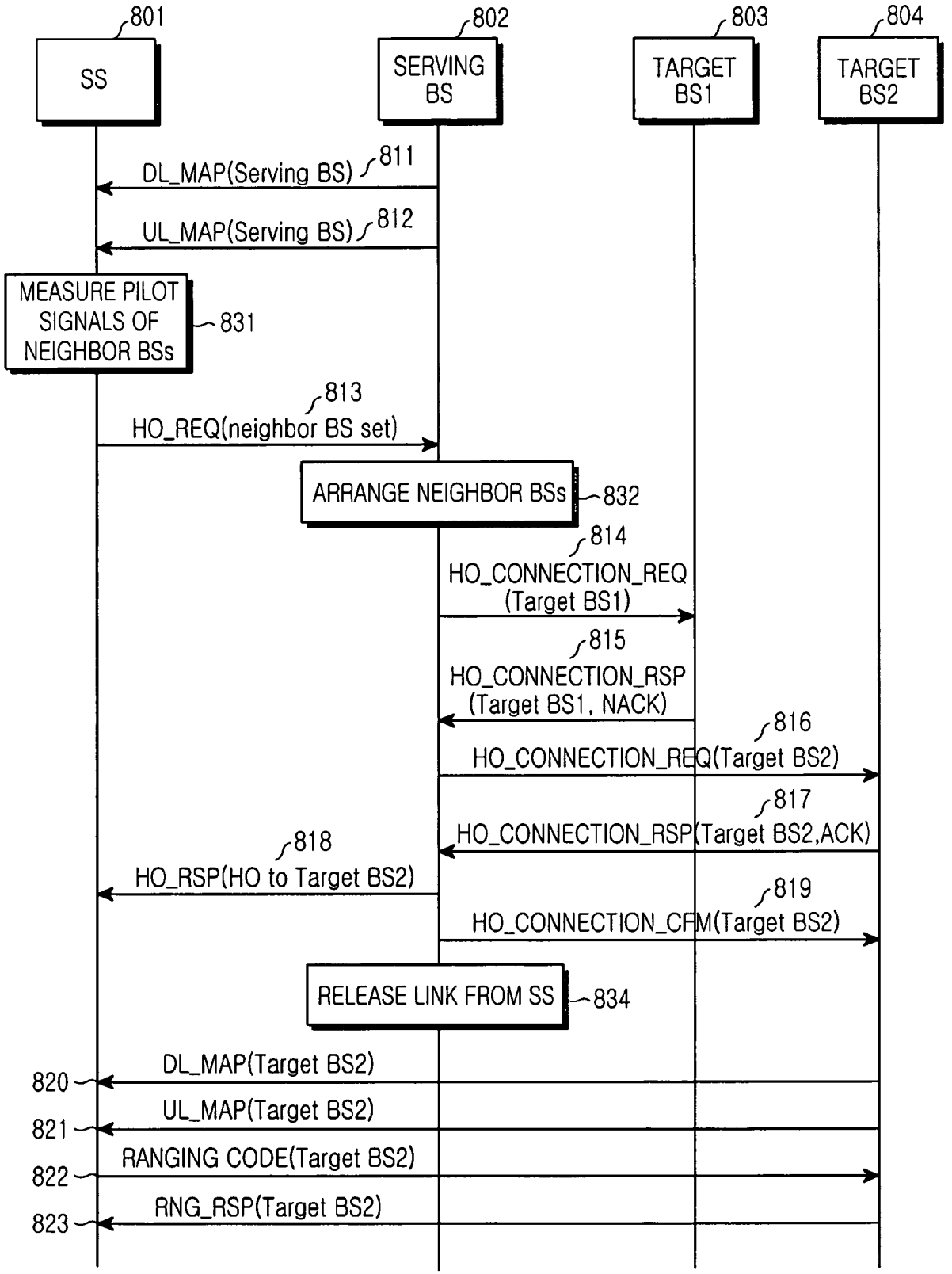
801
SS
802
SERVING BS
803
TARGET BS1
804
TARGET BS2
DL_MAP(Serving BS)
811
UL_MAP(Serving BS)
812
MEASURE PILOT SIGNALS OF NEIGHBOR BSs
831
813
HO_REQ(neighbor BS set)
ARRANGE NEIGHBOR BSs
832
814
HO_CONNECTION_REQ (Target BS1)
815
HO_CONNECTION_RSP (Target BS1, NACK)
816
HO_CONNECTION_REQ(Target BS2)
817
HO_CONNECTION_RSP(Target BS2,ACK)
818
HO_RSP(HO to Target BS2)
819
HO_CONNECTION_CFM(Target BS2)
RELEASE LINK FROM SS
834
DL_MAP(Target BS2)
820
UL_MAP(Target BS2)
821
RANGING CODE(Target BS2)
822
RNG_RSP(Target BS2)
823

FIG.8

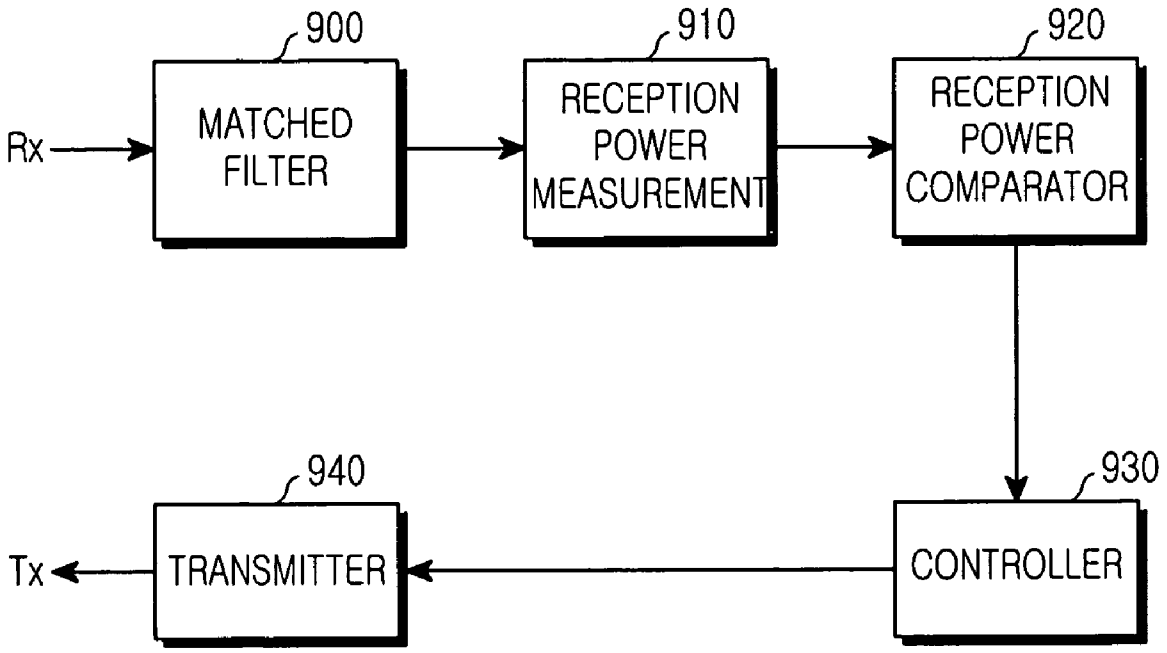
900
910
920
Rx
MATCHED FILTER
RECEPTION POWER MEASUREMENT
RECEPTION POWER COMPARATOR
940
930
Tx
TRANSMITTER
CONTROLLER

FIG.9

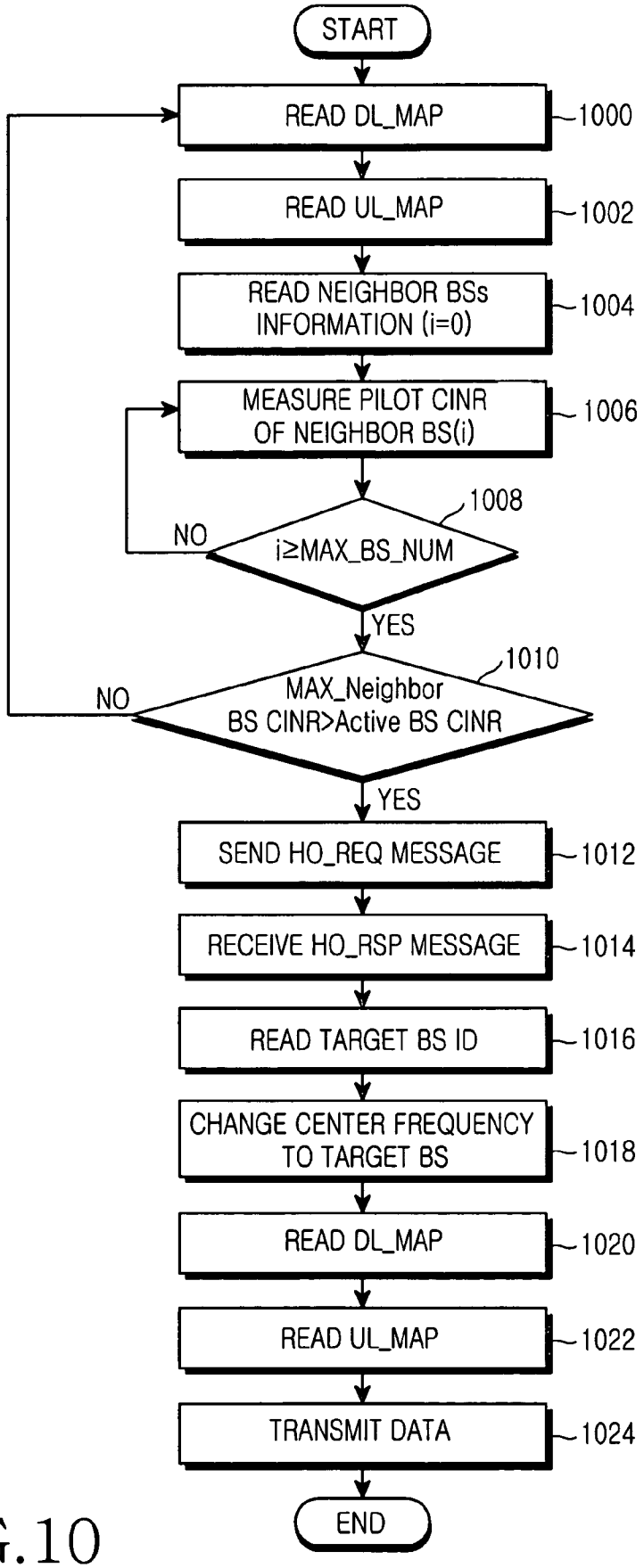
START
READ DL_MAP
1000
READ UL_MAP
1002
READ NEIGHBOR BSs INFORMATION (i=0)
1004
MEASURE PILOT CINR OF NEIGHBOR BS(i)
1006
1008
NO
i≥MAX_BS_NUM
YES
1010
NO
MAX_Neighbor BS CINR>Active BS CINR
YES
SEND HO_REQ MESSAGE
1012
RECEIVE HO_RSP MESSAGE
1014
READ TARGET BS ID
1016
CHANGE CENTER FREQUENCY TO TARGET BS
1018
READ DL_MAP
1020
READ UL_MAP
1022
TRANSMIT DATA
1024
END

FIG.10

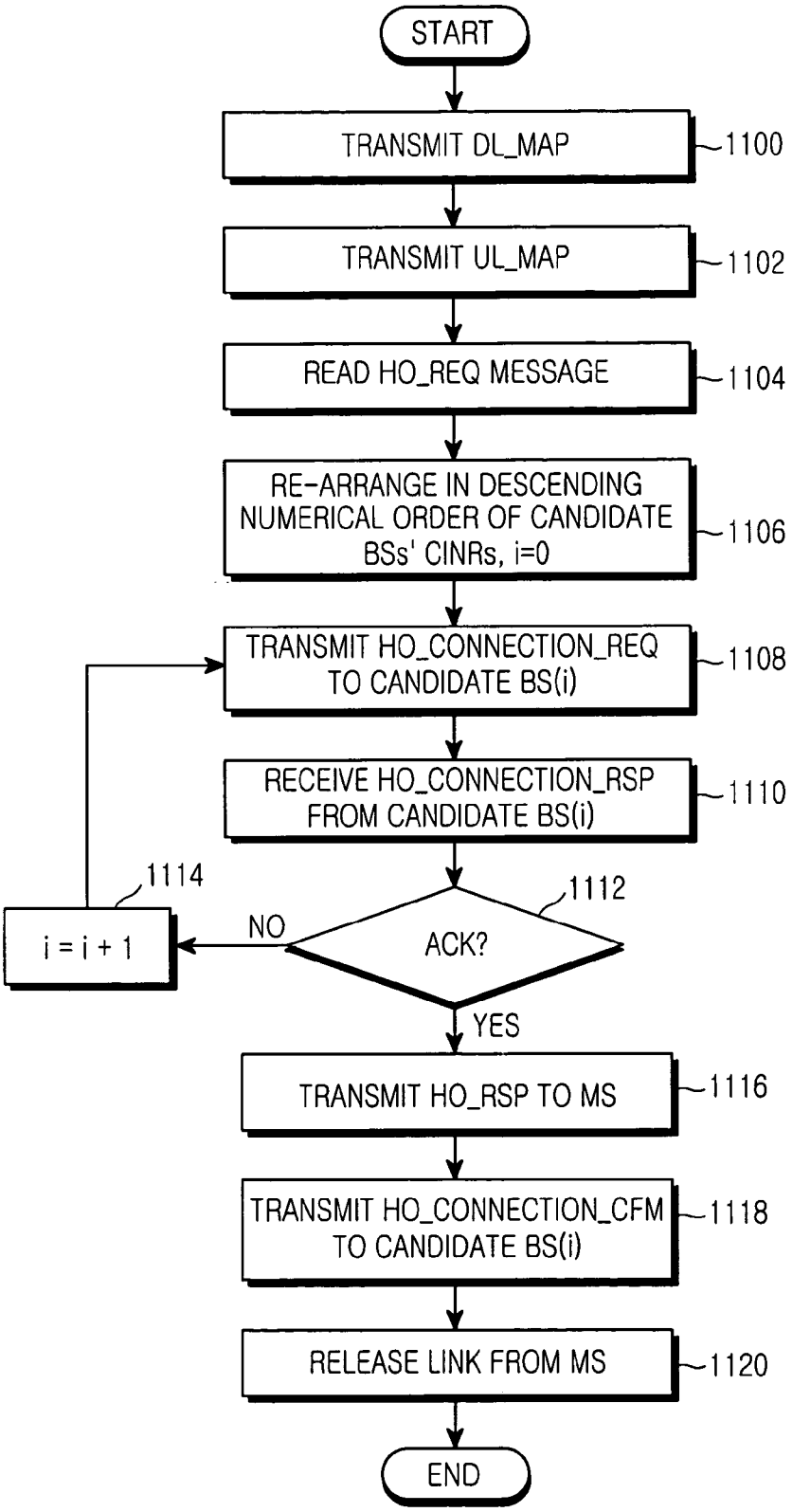
START
TRANSMIT DL_MAP
1100
TRANSMIT UL_MAP
1102
READ HO_REQ MESSAGE
1104
RE-ARRANGE IN DESCENDING NUMERICAL ORDER OF CANDIDATE BSs' CINRs, i=0
1106
TRANSMIT HO_CONNECTION_REQ TO CANDIDATE BS(i)
1108
RECEIVE HO_CONNECTION_RSP FROM CANDIDATE BS(i)
1110
1114
1112
i = i + 1
NO
ACK?
YES
TRANSMIT HO_RSP TO MS
1116
TRANSMIT HO_CONNECTION_CFM TO CANDIDATE BS(i)
1118
RELEASE LINK FROM MS
1120
END

FIG.11

SYSTEM AND METHOD FOR PERFORMING HANDOVER OPERATION IN BROADBAND WIRELESS ACCESS COMMUNICATION SYSTEM

PRIORITY

This application claims priority to an application entitled "SYSTEM AND METHOD FOR PERFORMING HANDOVER OPERATION IN BROADBAND WIRELESS ACCESS COMMUNICATION SYSTEM", filed in the Korean Intellectual Property Office on Mar. 8, 2003 and assigned Serial No. 2003-14641, the contents of which are incorporated herein by reference.

BACKGROUND OF THE INVENTION

1. Field of the Invention

The present invention relates to a broadband wireless access communication system, and more particularly to a system and method for performing a handover operation upon receipt of an SS (Subscriber Station) request in a BWA (Broadband Wireless Access) communication system using an OFDM (Orthogonal Frequency Division Multiplexing) scheme.

2. Description of the Related Art

Intensive research is being conducted into the 4G (4th Generation) communication system, one of the next generation communication systems, to provide a plurality of users with specific services having a variety of QoSs (Quality of Services) at a transfer rate of about 100 Mbps. Presently, the 3G (3rd Generation) communication system provides a transfer rate of about 384 kbps in an outdoor channel environment having a relatively poor channel environment, and provides a maximum transfer rate of about 2 Mbps in an indoor channel environment having a relatively good channel environment. A wireless Local Area Network (LAN) system and a wireless Metropolitan Area Network (MAN) system have been designed to provide a transfer rate of 20~50 Mbps. The 4G communication system provides the wireless LAN and MAN systems a relatively high transfer rate with mobility and QoS, and many secondary developers are conducting intensive research into high-speed services to be provided from the 4G communication system.

However, the wireless MAN system is suitable for a high-speed communication service in that it has a wide coverage area and supports a high-speed transfer rate, but it does not consider the mobility of a subscriber station (SS) at all, so that there is no consideration of the need for a handover operation (i.e., a cell selection operation) caused by the movement of the SS. The communication system currently considered in IEEE (Institute of Electrical and Electronics Engineers) 802.16a specification acts as a specific communication system for performing a ranging operation between the SS and a base station (BS). The communication system considered in the IEEE 802.16a specification will hereinafter be described with reference to FIG. **1**.

FIG. **1** is a block diagram illustrating a BWA communication system using an OFDM/OFDMA (Orthogonal Frequency Division Multiplexing/Orthogonal Frequency Division Multiple Access) scheme. In more detail, FIG. **1** depicts the IEEE 802.16a communication system.

The wireless MAN system acting as a BWA communication system has a much wider coverage area and a much higher transfer rate than the wireless LAN system. In case of adapting the OFDM scheme and the OFDMA scheme to a physical channel of the wireless MAN system to provide the wireless MAN system with a broadband transmission network, this application system is referred to as an IEEE 802.16a communication system. The IEEE 802.16a communication system applies the OFDM/OFDMA scheme to the wireless MAN system, such that it transmits a physical channel signal using a plurality of sub-carriers, resulting in high-speed data transmission. The IEEE 802.16e communication system has been designed to consider the mobility of an SS in the IEEE 802.16a communication system. There is no detailed specification for the IEEE 802.16e communication system.

Referring to FIG. **1**, the IEEE 802.16a communication system has a single cell structure, and is composed of a BS **100** and a plurality of SSs **110**, **120**, and **130** managed by the BS **100**. Signal transmission/reception among the BS **100** and the SSs **110**, **120**, and **130** can be established using the OFDM/OFDMA scheme. A downlink frame structure for use in the IEEE 802.16a communication system will hereinafter be described with reference to FIG. **2**.

FIG. **2** is a conceptual diagram illustrating the downlink frame structure for use in the BWA communication system using the OFDM/OFDMA scheme. In more detail, FIG. **2** depicts a downlink frame structure for use in the IEEE 802.16a communication system.

Referring to FIG. **2**, the downlink frame includes a preamble field **200**, a broadcast control field **210**, and a plurality of TDM (Time Division Multiplexing) fields **220** and **230**. A synchronous signal (i.e., a preamble sequence) for acquiring synchronization between the BS and the SSs is transmitted via the preamble field **200**. The broadcast control field **210** is composed of a DL(DownLink)_MAP field **211** and a UL(UpLink)_MAP field **213**. The DL_MAP field **211** is adapted to transmit the DL_MAP message, and a plurality of IEs (Information Elements) contained in the DL_MAP message are shown in the following Table 1:

TABLE 1

Syntax	Size	Notes
DL_MAP_Message_Format( ){		
Management Message Type=2	8 bits	
PHY Synchronization Field	Variable	See appropriate PHY specification
DCD Count	8 bits	
Base Station ID	48 bits	
Number of DL_MAP Element n	16 bits	
Begin PHY Specific section {		See applicable PHY section
for (I=1; i<=n; i++)		For each DL_MAP element 1 to n
DL_MAP Information Element( )	Variable	See corresponding PHY specification
if! (byte boundary) {		
Padding Nibble	4 bits	Padding to reach byte boundary
}		
}		
}		
}		

With reference to the above Table 1, the DL_MAP message includes a Management Message Type field indicative of a plurality of IEs (i.e., transmission message type information); a PHY (PHYsical) Synchronization field established in response to a modulation or demodulation scheme applied to a physical channel in order to perform synchronization acquisition; a DCD count field indicative of count information in response to a DCD (Downlink Channel Descriptor) message configuration variation containing a

downlink burst profile; a Base Station ID field indicative of a Base Station Identifier; and a Number of DL_MAP Element n field indicative of the number of elements found after the Base Station ID. Particularly, the DL_MAP message (not shown in Table 1) includes information associated with ranging codes allocated to individual ranging processes to be described later.

The UL_MAP field **213** is adapted to transmit the UL_MAP message, and a plurality of IEs contained in the UL_MAP message are shown in the following Table 2:

TABLE 2

Syntax	Size
UL_MAP_Message_Format( ){	
Management Message Type=3	8 bits
Uplink Channel ID	8 bits
UCD Count	8 bits
Number of UL_MAP Element n	16 bits
Allocation Start Time	32 bits
Begin PHY Specific section {	
for (i=1; i<n; i+n)	
UL_MAP Information_Element( )	Variable
Connection ID	
UIUC	
Offset	
}	
}	
}	
}	

With reference to Table 2, the UL_MAP message includes a Management Message Type field indicative of a plurality of IEs (i.e., transmission message type information); an Uplink Channel ID field indicative of a used Uplink Channel ID; a UCD (Uplink Channel Descriptor) count field indicative of count information in response to a UCD message configuration variation containing an uplink burst profile; and a Number of UL_MAP Element n field indicative of the number of elements found after the UCD count field. In this case, the uplink channel ID can only be allocated to a Media Access Control (MAC) sub-layer.

The UIUC (Uplink Interval Usage Code) area records information indicative of the usage of offsets recorded in the offset area. For example, provided that 2 is recorded in the UIUC area, a starting offset for use in the initial ranging process is recorded in the offset area. Provided that 3 is recorded in the UIUC area, a starting offset for use in either the bandwidth request ranging or the maintenance ranging process is recorded in the offset area. The offset area records a starting offset value for use in either the initial ranging process or the maintenance ranging process according to the information recorded in the UIUC area. Physical channel characteristic information to be transferred from the UIUC area is recorded in the UCD.

Provided that the SS results in a ranging failure, a predetermined backoff value is set up to increase the probability of success in the next trial, and the ranging process is re-performed after the lapse of a predetermined time corresponding to the backoff time. In this case, information needed for determining the backoff value is contained in the UCD message. The aforementioned UCD message configuration is shown in the following Table 3:

TABLE 3

Syntax	Size	Notes
UCD-Message Format( ){		
Management Message Type=0	8 bits	
Unlink channel ID	8 bits	

TABLE 3-continued

Syntax	Size	Notes
Configuration Change Count	8 bits	
Mini-slot size	8 bits	
Ranging Backoff Start	8 bits	
Ranging Backoff End	8 bits	
Request Backoff Start	8 bits	
Request Backoff End	8 bits	
TLV Encoded Information for the overall channel	Variable	
Begin PHY Specific Section {		
for (i=1; i<n; i+n)		
Uplink_Burst_Descriptor	Variable	
}		
}		
}		

With reference to the Table 3, the UCD message includes a Management Message Type field indicative of a plurality of IEs (i.e., transmission message type information); an Uplink Channel ID field indicative of a used Uplink Channel Identifier; a Configuration Change Count field counted by the BS; a mini-slot size field indicative of the number of mini-slots of the uplink physical channel; a Ranging Backoff Start field indicative of a backoff start point for an initial ranging process, i.e., an initial backoff window size for the initial ranging process; a Ranging Backoff End field indicative of a backoff end point for the initial ranging process, i.e., a final backoff window size; a Request Backoff Start field indicative of a backoff start point for establishing contention data and requests, i.e., an initial backoff window size; and a Request Backoff End field indicative of a backoff end point for establishing contention data and requests, i.e., a final backoff window size. In this case, the backoff value indicates a kind of standby time which is a duration time between the start of SS's access failure and the start of SS's re-access time. If the SS fails to execute an initial ranging process, the BS must transmit the backoff values indicative of standby time information for which the SS must wait for the next ranging process to the SS. For example, provided that a specific number of 10 is determined by the "Ranging Backoff Start" and "Ranging Backoff End" fields shown in Table 3, the SS must pass over 2^{10} access executable chances (i.e., 1024 access executable chances) and then execute the next ranging process according to a Truncated Binary Exponential Backoff Algorithm.

The TDM fields **220** and **230** indicate fields corresponding to timeslots allocated using a TDM/TDMA (Time Division Multiplexing/Time Division Multiple Access) scheme. The BS transmits broadcast information to be broadcast to SSs managed by the BS over the DL_MAP field **211** using a predetermined center carrier. The SSs monitor all the frequency bands having been previously allocated to individual SSs upon receipt of a power-on signal, such that they detect a pilot channel signal having the highest signal intensity, i.e., the highest pilot CINR (Carrier to Interference and Noise Ratio). It is determined that the SS belongs to a specific BS which has transmitted the pilot channel signal with the highest pilot CINR. The SSs check the DL_MAP field **211** and the UL_MAP field **213** of the downlink frame having been transmitted from the BS, such that they recognize their own uplink and downlink control information and specific information indicative of a real data transmission/reception position.

The downlink frame structure for use in the IEEE 802.16a communication system has been disclosed with reference to FIG. **2**. An uplink frame structure for use in the IEEE

802.16a communication system will hereinafter be described with reference to FIG. **3**.

FIG. **3** is a conceptual diagram illustrating an uplink frame structure for use in a BWA communication system using an OFDM/OFDMA scheme. In more detail, FIG. **3** depicts an uplink frame structure for use in the IEEE 802.16a communication system.

Prior to describing the uplink frame structure shown in FIG. **3**, three ranging processes for use in the IEEE 802.16a communication system, i.e., an initial ranging process, a maintenance ranging process (also called a period ranging process), and a bandwidth request ranging process will hereinafter be described in detail.

First, the initial ranging process will be described in detail.

The initial ranging process for establishing synchronization acquisition between the BS and the SS establishes a correct time offset between the SS and the BS, and is adapted to control a transmission power (also called a transmit power). In more detail, the SS is powered on, and receives the DL_MAP message, the UL_MAP message, and the UCD message to establish synchronization with the BS in such a way that it performs the initial ranging process to control the transmission power between the BS and the time offset. In this case, the IEEE 802.16a communication system uses the OFDM/OFDMA scheme, such that the ranging procedure requires a plurality of ranging sub-channels and a plurality of ranging codes. The BS allocates available ranging codes to the SS according to objectives of the ranging processes (i.e., the ranging process type information). This operation will hereinafter be described in detail.

The ranging codes are created by segmenting a PN (Pseudorandom Noise) sequence having a length of 2^{15}-1 bits into predetermined units. Typically, one ranging channel is composed of two ranging sub-channels each having a length of 53 bits, PN code segmentation is executed over the ranging channel having the length of 106 bits, resulting in the creation of a ranging code. A maximum of 48 ranging codes RC#1~RC#48 can be assigned to the SS. More than two ranging codes for every SS are applied as a default value to the three ranging processes having different objectives, i.e., an initial ranging process, a period ranging process, and a bandwidth request ranging process. In this way, a ranging code is differently assigned to the SS according to each objective of the three ranging processes. For example, N ranging codes are assigned to the SS for the initial ranging process as denoted by a prescribed term of "N RC (Ranging Codes) for Initial Ranging", M ranging codes are assigned to the SS for the periodic ranging process as denoted by a prescribed term of "M RCs for maintenance ranging", and L ranging codes are assigned to the SS for the bandwidth request ranging process as denoted by a prescribed term of "L RCs for BW-request ranging". The assigned ranging codes are transmitted to the SSs using the DL_MAP message, and the SSs perform necessary ranging procedures using the ranging codes contained in the DL_MAP message.

Second, the period ranging process will be described in detail.

The period ranging process is periodically executed such that an SS which has controlled a time offset between the SS and the BS, and a transmission power in the initial ranging process can control a channel state associated with the BS. The SS performs the period ranging process using the ranging codes assigned for the period ranging process.

Third, the bandwidth request ranging process will be described.

The bandwidth request ranging process is adapted to enable the SS, which has controlled a time offset between the SS and the BS, and a transmission power in the initial ranging process, to request a bandwidth allocation from the BS in such a way that the SS can communicate with the BS.

Referring to FIG. **3**, the uplink frame includes an initial maintenance opportunity field **300** using the initial and period ranging processes, a request contention opportunity field **310** using the bandwidth request ranging process, and an SS scheduled data field **320** composed of uplink data of a plurality of SSs. The initial maintenance opportunity field **300** includes a plurality of access burst fields each having real initial and period ranging processes, and a collision field in which there is a collision between the access burst fields. The request contention opportunity field **310** includes a plurality of bandwidth request fields each having a real bandwidth request ranging process, and a collision field in which there is a collision between the bandwidth request ranging fields. The SS scheduled data fields **320** are each composed of a plurality of SS scheduled data fields (i.e., SS **1** scheduled data field~SS N scheduled data field). The SS transition gap is positioned between the SS scheduled data fields (i.e., SS **1** scheduled data field~SS N scheduled data field).

FIG. **3** has disclosed the uplink frame structure for the IEEE 802.16a communication system. A ranging procedure for the IEEE 802.16a communication system using an OFDM scheme will hereinafter be described with reference to FIG. **4**.

FIG. **4** is a flow chart illustrating the ranging procedure between the SS and the BS in a BWA communication system using the OFDM scheme.

Referring to FIG. **4**, the SS **400** monitors all of its own predetermined frequencies upon receipt of a power-on signal, such that it detects a pilot channel signal having the highest signal intensity, i.e., the highest pilot CINR (Carrier to Interference and Noise Ratio). It is determined that SS **400** belongs to a specific BS **420** which has transmitted the pilot channel signal with the highest pilot CINR. The SS **400** receives a downlink frame preamble from the BS **420**, such that it acquires system synchronization with the BS **420**.

Upon establishing synchronization between the SS **400** and the BS **420**, the BS **420** transmits the DL_MAP message and the UL_MAP message to the SS **400** at steps **411** and **413**, respectively. As previously shown in Table 1, the DL_MAP message includes a variety of information, for example, requisite information for establishing synchronization between the SS **400** and the BS **420** in a downlink direction and configuration information of a physical channel capable of receiving a variety of messages transmitted to a plurality of SSs **400** over a downlink channel. As previously shown in Table 2, the UL_MAP message informs the SS **400** of SS scheduling interval information and physical channel configuration information, etc.

The DL_MAP message is periodically broadcast from the BS to all the SSs. In the case where the SS **400** can continuously receive the periodically-broadcast DL_MAP message, it is assumed that the SS is synchronized with the BS. The SSs receiving the DL_MAP message can receive all the messages transmitted over a downlink channel.

As stated above in Table 3, if the SS results in an access failure, the BS transmits the UCD message containing available backoff value indication information to the SS.

In case of performing the above ranging process, the SS **400** transmits an RNG_REQ (Ranging Request) message to the BS **420** at step **415**. The BS **420** receiving the RNG_REQ message transmits an RNG_RSP (Ranging

Response) message containing information for controlling a variety of factors (e.g., frequency, time, and transmission power) to the SS **400** at step **417**.

The RNG_REQ message configuration is shown in the following Table 4:

TABLE 4

Syntax	Size	Notes
RNG-REQ_Message_Format( ){		
Management Message Type=4	8 bits	
Downlink Channel ID	8 bits	
Pending Until Complete	8 bits	
TLV Encoded Information	Variable	TLV specific

With reference to Table 4, the Downlink Channel ID field indicates a downlink channel ID contained in the RNG-REQ message received in the SS via the UCD. The Pending Until Complete field indicates priority information of a transmission ranging response. In more detail, if the Pending Until Complete field is set to "0", a previous ranging response has priority. Otherwise, if the Pending Until Complete field is not set to "0", a current transmission ranging response has priority.

A detailed configuration of the RNG_RSP message to the RNG_REQ message shown in Table 4 is shown in Table 5:

TABLE 5

Syntax	Size	Notes
RNG_RSP_Message_Format( ){		
Management Message Type=5	8 bits	
Uplink Channel ID	8 bits	
TLV Encoded Information	Variable	TLV specific

With reference to Table 5, the Uplink Channel ID field indicates an uplink channel ID contained in the RNG_REQ message.

FIG. **4** has disclosed the ranging process when the IEEE 802.16a communication system uses the OFDM scheme. A ranging procedure for the IEEE 802.16a communication system using the OFDMA scheme will hereinafter be described with reference to FIG. **5**. In this case, the IEEE 802.16a communication system contains a dedicated ranging interval in order to enable the IEEE 802.16a communication system to more effectively perform the ranging process using the OFDMA scheme, so that it may transmit the Ranging-Code instead of the RNG_REQ message according to a ranging code transmission scheme in the dedicated ranging interval.

Referring to FIG. **5**, the BS **520** transmits the DL_MAP message and the UL_MAP message to the SS **500** at steps **511** and **513**, respectively. Detailed operations of steps **511** and **513** are equal to those of steps **411** and **413**. The communication system using the OFDMA scheme of FIG. **5** transmits a ranging code instead of the RNG-REQ message having been described in FIG. **4** at step **515**. The BS **520** receiving the ranging code transmits the RNG_RSP message to the SS **500** at step **517**.

New information must be added to the RNG_RSP message such that information corresponding to the ranging code transmitted to the BS can be recorded in the RNG_RSP message. The aforementioned new information to be added to the RNG_RSP message is composed of a ranging code (i.e., a received ranging CDMA code), a ranging symbol (i.e., an OFDM symbol in the received ranging CDMA code), a ranging sub-channel (i.e., a ranging sub-channel in the received ranging CDMA code), and a ranging frame number (i.e., a frame number in the received ranging CDMA code).

As described above, the IEEE 802.16a communication system operates on the basis of a fixed state of a current SS (i.e., there is no consideration given to the mobility of the SS) and a single cell structure. However, the IEEE 802.16e communication system has been defined as a system for considering the SS's mobility in the IEEE 802.16a communication system, such that the IEEE 802.16e communication system must consider the SS's mobility in a multi-cell environment. In order to provide the SS's mobility in the multi-cell environment, individual operating modes of the SS and the BS must be converted. However, the IEEE 802.16e communication system has not proposed a new method for the SS's mobility in the multi-cell environment. In conclusion, a handover system considering both an idle state and a communication service execution mode must be developed to provide mobility to an SS in a IEEE 802.16e communication system.

SUMMARY OF THE INVENTION

Therefore, the present invention has been made in view of the above problems, and it is an object of the present invention to provide a system and method for performing a handover operation in a BWA communication system.

It is another object of the present invention to provide a system and method for performing a handover operation upon receipt of an SS request signal in a BWA communication system.

In accordance with one aspect of the present invention, the above and other objects can be accomplished by the provision of a subscriber station (SS) handover method upon receiving a handover request from the SS in a BWA (Broadband Wireless Access) communication system comprised of a serving BS (Base Station) and a plurality of neighbor BSs adjacent to the serving BS, comprising the steps of: a) receiving from the serving BS information relating to the plurality of neighbor BSs; b) measuring CINRS (Carrier to Interference and Noise Ratios) of pilot signals transferred from the neighbor BSs upon receipt of the information relating to the neighbor BSs; c) transmitting a handover request signal to the serving BS along with pilot signal CINR information of the neighbor BSs; d) upon receipt of the handover request signal, receiving from the serving BS information of a target BS inform among the neighbor BSs; and e) performing a handover function from the serving BS to the target BS.

In accordance with another aspect of the present invention, there is provided a serving BS (Base Station) handover method upon receiving a handover request from an SS (Subscriber Station) in a BWA (Broadband Wireless Access) communication system comprised of a serving BS and a plurality of neighbor BSs adjacent to the serving BS, comprising the steps of: a) transmitting to the SS information relating to the neighbor BSs; b) receiving from the SS a handover request signal containing CINR (Carrier to Interference and Noise Ratio) information of pilot signals of the neighbor BSs; c) determining if the neighbor BSs contained in the handover request signal can support a handover function for the SS, and selecting a target BS acting as a handover target of the SS from among neighbor BSs capable of supporting the handover function for the SS; and d) transmitting a response signal associated with the handover

request signal of the SS along with the target BS information, and informing the target BS of a handover ready state of the SS.

In accordance with yet another aspect of the present invention, there is provided an SS (Subscriber Station) handover method upon receiving a handover request from the SS in a BWA (Broadband Wireless Access) communication system comprised of a serving BS (Base Station) and a plurality of neighbor BSs adjacent to the serving BS, comprising the steps of: a) receiving from the serving BS information relating to the plurality of neighbor BSs and handover condition information; b) measuring CINRs (Carrier to Interference and Noise Ratios) of pilot signals transferred from the neighbor BSs upon receipt of the neighbor BSs information; c) selecting a plurality of candidate BSs corresponding to the handover condition information from among the neighbor BSs, and transmitting a handover request signal to the serving BS along with pilot signal CINR information of the candidate BSs; d) upon receipt of the handover request signal, receiving from the serving BS information of a target BS from among the candidate BSs; and e) performing a handover function from the serving BS to the target BS.

In accordance with yet another aspect of the present invention, there is provided a handover method upon receiving a handover request from an SS (Subscriber Station) in a BWA (Broadband Wireless Access) communication system comprised of a serving BS (Base Station) and a plurality of neighbor BSs adjacent to the serving BS, comprising the steps of: a) controlling the serving BS to transmit to the SS information of the neighbor BSs and handover condition information; b) controlling the SS to measure CINRs (Carrier to Interference and Noise Ratios) of pilot signals transferred from the neighbor BSs according to the neighbor BSs information; c) controlling the SS to determine a plurality of candidate BSs corresponding to handover condition information from among the neighbor BSs, and transmitting to the serving BS a handover request signal along with pilot signal CINR information of the candidate BSs; d) if the serving BS receives the handover request signal from the SS, determining if the neighbor BSs contained in the handover request signal can support a handover function for the SS, and selecting a target BS acting as a handover target of the SS from among candidate BSs capable of supporting the handover function for the SS; e) controlling the serving BS to transmit a response signal associated with the handover request signal to the SS along with the target BS information, and informing the target BS of a handover ready state of the SS; and f) controlling the SS to perform a handover operation from the serving BS to the target BS according to the target BS information contained in the handover request response signal.

In accordance with yet another aspect of the present invention, there is provided a handover apparatus upon receiving a handover request from the SS (Subscriber Station) in a BWA (Broadband Wireless Access) communication system comprised of a serving BS (Base Station) and a plurality of neighbor BSs adjacent to the serving BS, comprising: the serving BS, which transmits information of the neighbor BSs and handover condition information to the SS, determines if the neighbor BSs contained in the handover request signal can support a handover function for the SS upon receiving the handover request signal from the SS, selects a target BS acting as a handover target of the SS from among candidate BSs capable of supporting the handover function for the SS, transmits a response signal associated with the handover request signal to the SS along with the target BS information, and informs the target BS of a handover ready state of the SS; and the SS, which measures CINRs (Carrier to Interference and Noise Ratios) of pilot signals transferred from the neighbor BSs according to the neighbor BSs information, selects a plurality of candidate BSs corresponding to handover condition information from among the neighbor BSs, transmits a handover request signal to the serving BS along with pilot signal CINR information of the candidate BSs, and performs a handover operation from the serving BS to the target BS according to the target BS information contained in the handover request response signal.

BRIEF DESCRIPTION OF THE DRAWINGS

The above and other objects, features and other advantages of the present invention will be more clearly understood from the following detailed description taken in conjunction with the accompanying drawings, in which:

FIG. **1** is a block diagram illustrating a conventional BWA (Broadband Wireless Access) communication system using an OFDM/OFDMA scheme;

FIG. **2** is a conceptual diagram illustrating a conventional downlink frame structure for use in a BWA communication system using an OFDM/OFDMA scheme;

FIG. **3** is a conceptual diagram illustrating a conventional uplink frame structure for use in a BWA communication system using an OFDM/OFDMA scheme;

FIG. **4** is a flow chart illustrating a conventional ranging process between an SS and a BS in a BWA communication system using an OFDM scheme;

FIG. **5** is a flow chart illustrating a conventional ranging process between an SS and a BS in a BWA communication system using an OFDMA scheme;

FIG. **6** is a block diagram illustrating a BWA communication system using an OFDM/OFDMA scheme to perform a variety of functions in accordance with a preferred embodiment of the present invention;

FIG. **7** is a flow chart illustrating a handover procedure upon receiving a handover request from an SS in a BWA communication system using an OFDM scheme in accordance with a preferred embodiment of the present invention;

FIG. **8** is a flow chart illustrating a handover procedure upon receiving a handover request from an SS in a BWA communication system using an OFDMA scheme in accordance with a preferred embodiment of the present invention;

FIG. **9** is a block diagram illustrating an internal configuration of the SS for performing inventive functions in accordance with a preferred embodiment of the present invention;

FIG. **10** is a flow chart illustrating operations of the SS in accordance with a preferred embodiment of the present invention; and

FIG. **11** is a flow chart illustrating operations of a serving BS in accordance with a preferred embodiment of the present invention.

DETAILED DESCRIPTION OF THE PREFERRED EMBODIMENTS

Now, preferred embodiments of the present invention will be described in detail with reference to the annexed drawings. In the drawings, the same or similar elements are denoted by the same reference numerals even though they are depicted in different drawings. In the following description, a detailed description of known functions and configurations incorporated herein will be omitted when it may obscure the subject matter of the present invention.

FIG. **6** is a block diagram illustrating a BWA communication system using an OFDM/OFDMA scheme to perform a variety of functions in accordance with a preferred embodiment of the present invention.

Prior to describing the BWA communication system shown in FIG. **6**, it is noted that the present invention adapts the IEEE 802.16e communication system using an OFDM/OFDMA scheme as a representative example. It is also noted that an IEEE 802.16e communication system acting as a communication system for considering the mobility of an SS in the IEEE 802.16a communication system has not been developed yet. Provided that the SS's mobility is considered in the IEEE 802.16a communication system, it is possible to consider the multi-cell structure and an SS's handover operation (i.e., a cell selection operation) between the multi-cells. Therefore, the present invention provides the IEEE 802.16e communication system as shown in FIG. **6**.

Referring to FIG. **6**, the IEEE 802.16e communication system includes a multi-cell structure, i.e., a plurality of cells **600** and **650**. In more detail, the IEEE 802.16e communication system includes a first BS **610** for managing the cell **600**, a second BS **640** for managing the cell **650**, and a plurality of SSs **611**, **613**, **630**, **651**, and **653**. Signal transmission/reception among the BSs **610** and **640** and the SSs **611**, **613**, **630**, **651**, and **653** is established using the OFDM/OFDMA scheme. Among the subscriber stations **611**,**613**, **630**,**651**, and **653**, the subscriber station **630** is located in a boundary region, or a handover region, between the cell **600** and the cell **650**. Therefore, it is necessary to support a handover of the subscriber station **630** in order to support mobility of the subscriber station **630**.

In general, and according to an embodiment of the present invention an SS for use in the BWA communication system receives a plurality of signals from a plurality of BSs. The SS detects individual CINRS (Carrier to interference and Noise Ratios) of the received pilot signals. The SS selects a specific BS, which has transmitted a pilot channel having the highest CINR from among CINRs of the pilot signals, and determines the selected BS to be a serving BS (i.e., an active BS) to which the SS belongs. In more detail, the SS selects a BS having the best reception state from among a plurality of BSs transmitting the pilot signals, and recognizes the selected BS as its own serving BS. For the convenience of description, the term "Active BS" or "Serving BS" may be employed in the present invention for illustrative purposes.

The SS which has selected the active BS receives a downlink frame and a uplink frame from the active BS. The detailed configurations of the downlink frame and the uplink frame received from the active BS have been disclosed in the prior art, so that they will herein be omitted for the convenience of description. The present invention must add new IEs (Information Elements) to the DL_MAP message provided from the IEEE 802.16a/IEEE 802.16e communication system in such a way that it can support a handover operation upon receiving a request from the SS. A detailed configuration of the DL_MAP message for supporting the handover operation upon receipt of the SS's request is shown in the following Table 6:

TABLE 6

MAC management message	Parameter	Multi	Content
	Neighbor list BS Num	Common	Number of Neighbor list BSs
	Neighbor list Info	1 to Neighbor list BS Num	
	Neighbor list BS ID		IDs of Neighbor list BSs
	Neighbor Frequency		Frequencies of Neighbor BSs

TABLE 6-continued

MAC management message	Parameter	Multi	Content
	Neighbor Frequency offset		Frequency offsets of Neighbor BSs
	Neighbor Frame offset		Frequency offsets of Neighbor list BSs
	Measurement Info	Common	
	Pilot min CINR		Minimum value containable in Neighbor list
	MAX_T		Maximum time during which BSs contained in Neighbor list remain below pilot min CINR
	MIN_T		Minimum time during which BS having the highest pilot CINR among BSs in the Neighbor list remains at a value higher than pilot CINR of active BS

With reference to the above Table 6, the number of neighbor BSs (denoted by "Neighbor list BS Num") indicates the number of neighbor BSs contained in the neighbor list. The neighbor list field indicates the list of neighbor BSs of the active BS. The Neighbor list Info field indicates neighbor BSs contained in the neighbor list, i.e., a plurality of neighbor BSs from a first neighbor BS to the last neighbor BS. The neighbor list information denoted by "Neighbor list Info" includes a Neighbor list BS ID field, a Neighbor Frequency field, a Neighbor Frequency Offset field, and a Neighbor Frame Offset field. The Neighbor list BS ID field indicates IDs of individual BSs contained in the neighbor list. The Neighbor Frequency field indicates a center frequency of a corresponding neighbor BS. The Neighbor Frequency Offset field indicates a frequency offset of a corresponding neighbor BS. The neighbor frame offset field indicates a frame offset of a corresponding neighbor BS. The Measurement Info field includes a minimum pilot signal CINR (Pilot min CINR) field, a maximum time (MAX_T) field and a minimum time (MIN_T) field. The Pilot min CINR field is adapted as a reference for selecting neighbor BSs containable in the Neighbor list Info field from among a plurality of BSs of the IEEE 802.16e communication system. In more detail, only BSs transmitting pilot signals each higher than the Pilot min CINR can be adapted as neighbor BSs contained in the neighbor list. The MAX_T field indicates a maximum time for enabling each neighbor BS to have a pilot signal CINR of less than the Pilot min CINR. In more detail, the neighbor BSs must transmit pilot signals higher than the Pilot min CINR. If the pilot signal less than the Pilot min CINR is transmitted during the MAX_T time, a corresponding neighbor BS is removed from the neighbor list. In this way, if the neighbor BS capable of transmitting the pilot signal having the Pilot min CINR during the MAX_T time has been removed from the neighbor list, there is no need for the SS to measure an unnecessary pilot CINR. The MIN_T time indicates a minimum time during which the highest pilot CINR from among a plurality of pilot CINRs of the neighbor BSs must be higher than a pilot CINR of the active BS. In more detail, in order to control the SS to be handed over from the active BS to a specific neighbor BS (i.e., a target BS), a CINR of a pilot signal transmitted from the target BS must be higher than that of the other pilot signal transmitted from the active BS

during more than the MIN_T time. The MIN_T is set in order to prevent a ping-pong phenomenon in which the subscriber station sends a handover request to the base station each time a CINR of a received pilot channel is higher than a CINR of the active base station. In this case, it should be noted that the MAX_T time and the MIN_T time may be differently determined according to state and channel condition information of individual BSs in the IEEE 802.16e communication system.

A ranging request step during which the SS having received the DL_MAP message and the UL_MAP message requests the ranging process from the active BS and a ranging response step during which a response signal to the ranging request is transmitted to the SS which has transmitted the ranging request are equal to those of the prior art, such that their detailed description will herein omitted for the convenience of description. The SS having successfully established the ranging process wirelessly communicates with the active BS. The handover process in response to the SS request signal during the wireless access communication time between the SS and the active BS will hereinafter be described with reference to FIG. **7**.

FIG. **7** is a flow chart illustrating the handover procedure upon receiving a handover request from the SS in the IEEE 802.16e communication system using the OFDM scheme in accordance with a preferred embodiment of the present invention.

Referring to FIG. **7**, upon establishing system synchronization between an SS **701** and a serving BS (also called an active BS) **702**, the serving BS **702** transmits the DL_MAP message and the UL_MAP message to the SS **701** at steps **711** and **712**, respectively. The DL_MAP message format and the UL_MAP message format have been disclosed in Table 6 and Table 2, respectively, such that their detailed description will herein be omitted. The SS **701** receives the DL_MAP message to detect information of neighbor BSs of the SS **701**, such that the SS **701** measures CINRS of the pilot signals received from the neighbor BSs at step **731**.

The SS **701** temporarily stops receiving transmission data of the serving BS **702**. In more detail, the SS **701** measures CINRs of the pilot signals received from the neighbor BSs during a reception interrupt time of the transmission data of the serving BS **702**. In this case, the SS **701** does not measure individual CINRs of the pilot signals received from all the neighbor BSs contained in the neighbor list contained in the DL_MAP message, and is adapted to measure only CINRs of pilot channel signals received from the neighbor BSs excluded by the MIN_T time. The method for measuring the CINRs of the pilot signals received from the neighbor BSs will be described in detail.

The SS **701** establishes synchronization with individual neighbor BSs using a variety of information of neighbor BSs contained in the neighbor list of the DL_MAP message. Upon establishing synchronization with the neighbor BSs, the SS **701** measures CINRs of pilot signals received from the neighbor BSs.

The SS **701** having measured the CINRs of the pilot signals received from the neighbor BSs determines whether it is handed over to another BS instead of the serving BS **702**. The handover determination step of the SS **701** will be described in detail. At least one of the CINRs of pilot signals received from the neighbor BSs must satisfy the MAX_T condition. Provided that the CINRs of the pilot signals received from the neighbor BSs contained in the neighbor list are less than the minimum pilot CINR denoted by "Pilot min CINR" during more than the MAX_T time, corresponding pilot signals are removed from the neighbor list, such that the MAX_T condition must be satisfied. In this case, the neighbor BSs which have satisfied the MAX_T condition are each called a candidate BS (i.e., a target BS). If the MAX_T condition has been satisfied, the SS **701** determines whether CINRs of pilot signals transmitted from the neighbor BSs are greater than a CINR of a pilot signal received from the serving BS **702**. If it is determined that the pilot signal CINR received from the serving BS **702** is greater than individual CINRs of the pilot signals received from the neighbor BSs, the SS **702** does not request the handover operation from the serving BS **702**. Otherwise, if it is determined that the pilot signal CINR received from the serving BS **702** is less than CINRs of the pilot signals received from the neighbor BSs, the SS **701** requests the handover operation from the serving BS **702**. Needless to say, the SS **701** requests the handover operation from the serving BS **702** on the condition that a neighbor BS satisfying the MIN_T condition is found. The reason why the SS **701** requests the handover operation from the serving BS **702** on the condition that the MIN_T time condition has been satisfied is to prevent the aforementioned pingpong phenomenon from being generated.

If the handover operation has been determined, the SS **701** transmits a handover request (HO_REQ) message to the serving BS **702** at step **713**. The HO_REQ message format is shown in Table 7:

TABLE 7

MAC management message	Parameter	Multi	Content
HQ_REQ	Uplink Channel ID	common	Uplink channel ID contained in message
	Neighbor list BS carrier frequency	1 to Neighbor list BS Num	carrier frequencies of neighbor BSs
	CINR of neighbor list BS		Pilot CINRs of Neighbor list BSs
	QoS	common	Service category information of MS
	BW request	common	BW Information of MS

Prior to describing Table 7, it should be noted that neighbor BSs act as target BSs after receiving a handover request from the SS **701**, such that they are the same as the target BSs after the SS has generated the handover request. Referring to Table 7, the Neighbor list BS carrier frequency field indicates carrier frequencies of neighbor BSs (i.e., target BSs) which have received the handover request from the SS **701**. The CINR of neighbor list BS field indicates CINRs of pilot signals transmitted from the neighbor BSs. The QoS field indicates a quality of service (QoS) desired by the SS **701**. The BW request field indicates a bandwidth requested in response to the QoS desired by the SS **701**. In this case, the QoS is composed of a variety of service grades, i.e., an Unsolicited Grant Service (UGS), a Real-Time Polling Service (rtPS), a Non-Real-Time Polling Service (nrtPS), and a Best Effort Service (BE). The serving BS **702** having received the handover request message from the SS **701** arranges neighbor BSs contained in the handover request message. There are a variety of possible methods for arranging the neighbor BSs. As stated above, the CINR of the neighbor BS which stops measuring the CINR of the pilot signal using the SS **701** is set to "0". The serving BS **702** may configure information of the arranged neighbor BSs in the form of a list, and may store the list-formatted information.

The serving BS **702** arranging the neighbor BSs sequentially transmits an HO_CONNECTION_REQ (Handover Connection Request) message to corresponding neighbor BSs (i.e., target BSs) according to the arranged order of the neighbor BSs at steps **714** and **716**. The HO_CONNECTION_REQ message format is shown in the following Table 8:

TABLE 8

MAC management message	Parameter	Multi	Content
HO_CONNECTION_REQ	Target BS ID	common	Target BS ID
	CID	common	Terminal CID in Serving BS
	QoS	common	Service category information of MS
	BW request	common	BW to be assigned to MS

With reference to Table 8, the Target BS ID indicates ID information of the target BS. The CID (Connection ID) is a connection CID assigned from the serving BS **702** to the SS **701**. The QoS field indicates a quality of service (QoS) desired by the SS **701**. The BW request field indicates a bandwidth requested in response to the QoS desired by the SS **701**. The reason why the serving BS **702** transmits the HO_CONNECTION_REQ message to the target BSs (i.e., a target BS**1** **703** and a target BS**2** **704**) is to determine whether or not a QoS and a bandwidth associated with the service desired by the SS **701** can be satisfied.

If the target BSs **703** and **704** receive the HO_CONNECTION_REQ message, they transmit the HO_CONNECTION_RSP (Handover Connection Response) message to the serving BS **702** at steps **715** and **717**. A representative example of the HO_CONNECTION_RSP message format is shown in the following Table 9:

TABLE 9

MAC management message	Parameter	Multi	Content
HO_CONNECTION_RSP	Target BS ID	common	Target BS ID
	CID	common	Terminal CID in Serving BS
	ACK/NACK	common	HO approval or disapproval

With reference to Table 9, the Target BS ID field indicates ID information of the target BS transmitting the HO_CONNECTION_RSP, the CID is a connection ID used for the serving BS **702** of the SS **701**. The ACK/NACK field indicates HO (handover) approval or disapproval information of the SS **701**. In more detail, in the case where the ACK message is contained in the HO_CONNECTION_RSP message, a corresponding target BS is able to provide the SS **701** with a handover function. In the case where the NACK message is contained in the HO_CONNECTION_RSP message, a corresponding target BS is unable to provide the SS **701** with the handover function. As shown in FIG. **7**, the target BS**1** **703** transmits the HO_CONNECTION_RES message containing the NACK field indicative of an handover support disable state for the SS **701**. It is assumed that the target BS**2** **704** transmits the HO_CONNECTION_RSP message containing the ACK field indicative of a handover support enable state for the SS **701**.

The HO_CONNECTION_REQ message and the HO_CONNECTION_RSP message are sequentially transmitted as shown in FIG. **7**, but they may also be transmitted simultaneously if needed.

Upon receiving the HO_CONNECTION_RSP message from the target BSs, the serving BS **702** detects the ACK/NACK field contained in the received HO_CONNECTION_RSP message, such that it sets the target BS (i.e., the target BS**2** **704**) which has transmitted the HO_CONNECTION_RSP message containing the ACK field to a last target BS to which the SS **701** is handed over. Thereafter, the serving BS **702** transmits the HO_RSP (Handover Response) message containing the last target BS information to the SS **701** at step **718**. The HO_RSP message includes information of the last target BS to which the SS **701** is handed over. A representative example of the HO_RSP message is shown in Table 10:

TABLE 10

MAC management message	Parameter	Multi	Content
HO_RSP	Target BS ID	common	Target BS ID
	Target BS carrier frequency	common	Carrier frequency of Target BS

With reference to Table 10, the Target BS ID field indicates ID information of the last target BS to which the SS **701** is handed over. The Target BS carrier frequency field indicates a carrier frequency of the last target BS. The serving BS **702** having transmitted the HO_RSP message transmits an HO_CONNECTION_CFM (Handover Connection Confirmation) message to the last target BS (i.e., the target BS**2** **704**) at step **719**. In this case, the HO_CONNECTION_CFM message indicating that the SS **701** will be handed over to the last target BS **704** is transmitted. A representative example of the HO_CONNECTION_CFM message is shown in Table 11:

TABLE 11

MAC management message	Parameter	Multi	Content
HO_CONNECTION_CFM	Target BS ID	common	Target BS ID
	CID	common	Terminal CID in Serving BS

With reference to Table. 11, the Target BS ID field indicates ID information of a neighbor BS (i.e., the last target BS) receiving the HO_CONNECTION_CFM message. The CID indicates a connection ID assigned from the serving BS **702** to the SS **701**. The serving BS **702** having transmitted the HO_CONNECTIN_CFM message to the target BS**2** **704** releases a link connected to the SS **701** at step **734**.

The target BS**2** **704** transmits the DL_MAP message and the UL_MAP message to the SS **701** at steps **720** and **721**, respectively. The DL_MAP message and the UL_MAP message include updated information of the SS **701**. The SS **701** having received the DL_MAP message and the UL_MAP message transmits an RNG_REQ (Ranging Request) message to the target BS**2** **704** at step **722**. The target BS**2** **704** having received the RNG_REQ message

transmits the RNG_RSP message acting as a response message associated with the RNG_REQ message to the SS **701** at step **723**. A detailed process performed in the steps **720** to **723** is identical to the process performed in the steps **411** to **417** illustrated in FIG. **4**. Therefore, a detailed description of these steps will not be given again herein.

FIG. **7** has disclosed the handover procedure upon receiving a handover request from the SS in the IEEE 802.16e communication system using the OFDM scheme. FIG. **8** is a flow chart illustrating a handover procedure upon receiving a handover request from the SS in the IEEE 802.16e communication system using the OFDMA scheme in accordance with a preferred embodiment of the present invention.

Prior to describing FIG. **8** in detail, it should be noted that steps **811** to **821** and steps **831** to **834** shown in FIG. **8** are equal to steps **711** to **721** and steps **731** to **734** shown in FIG. **7**, respectively, such that their detailed description will herein be omitted. Because the OFDMA scheme is applied to FIG. **8**, the SS **801** transmits a ranging code instead of the RNG_REQ message to the last target BS (i.e., the target BS**2** **804**) at step **822**. The target BS**2** **804** having received the ranging code transmits the RNG_RSP message acting as a response associated with the ranging code to the SS **801** at step **823**. In more detail, the handover procedure of FIG. **7** is substantially equal to that of FIG. **8**, however, the IEEE 802.16e communication system transmits the RNG_REQ message according to the OFDM scheme in FIG. **7** scheme whereas it transmits the ranging code according to the OFDMA scheme in FIG. **8**. FIG. **8** has disclosed the handover procedure upon receipt of a handover request from the SS in the IEEE 802.16e communication system using the OFDMA scheme. The SS internal configuration for performing inventive functions will hereinafter be described with reference to FIG. **9**.

FIG. **9** is a block diagram illustrating the SS internal configuration for performing inventive functions in accordance with a preferred embodiment of the present invention. Referring to FIG. **9**, the SS internal configuration includes a matched filter **900**, a reception power measurement unit **910**, a reception power comparator **920**, a controller **930**, and a transmitter **940**. The matched filter **900** determines whether a PN (Pseudo Noise) code for synchronization detection is synchronized or not, and outputs a predetermined energy value according to the determined result. In this case, the correlator may also be adapted as the matched filter **900**. The matched filter **900** compares the received synchronization detection PN code with a unique PN code of the SS, and outputs the energy value in association with the same PN code. In more detail, the matched filter **900** sequentially enters a reception signal of the SS in a predetermined window, and performs a predetermined bit operation in parallel to the unique PN code value, resulting in the sum of the bit-operation values. Therefore, if the reception signal of the SS is equal to the unique PN code value stored in the SS, this condition is called an auto-correlation state, such that a maximum energy value is generated. If the SS reception signal is different from the unique PN code value, this condition is called an inconsistent synchronization state, such that a relatively low energy value is generated. Typically, the output energy values are compared with a predetermined threshold value so that it is determined whether the auto-correlation state is established. In conclusion, the output value of the matched filter **900** is compared with the predetermined threshold value so that the presence or absence of the auto-correlation state can be determined.

If the reception power measurement unit **910** is synchronized with a pilot signal received from each neighbor BS via the matched filter, the reception power measurement Unit **910** measures the reception power of the received pilot signal. The reception power measurement unit **910** measures the CINR of the received pilot signal, and transmits the measured CINR of the pilot signal to the reception power comparator **920**. Upon receiving CINRs of the pilot signals from the reception power measurement unit **910**, the reception power comparator **920** compares the received pilot signal CINRs of the neighbor BSs with a predetermined threshold value (i.e., a Pilot min CINR). If at least one pilot signal CINR from among pilot signal CINRs transmitted from the neighbor BSs is greater than the threshold value, the reception power comparator **920** goes to the next step. In more detail, it is determined whether at least one pilot signal CINR from among the neighbor BSs' pilot signal CINRs is greater than a pilot signal CINR of the serving BS. If it is determined that a neighbor BS having a pilot signal CINR greater than that of the serving BS is found, information of a neighbor BS having the pilot signal CINR greater than that of the serving BS is transmitted to the controller **930**. The controller **930** determines whether the SS transmits its own handover request to the serving BS according to information received from the reception power comparator **920**.

In more detail, if the CINRs of the pilot signals transmitted from the neighbor BSs are greater than that of the other pilot signal transmitted from the serving BS, the controller **930** generates a handover request signal of the SS. In this case, although there is no description in the drawings, it should be noted that the MAX_T and MIN_T conditions must be satisfied in the handover request process. The controller **930** generates a handover request (HO_REQ) message by controlling the transmitter **940**, and transmits the generated handover request message to the serving BS. The transmitter **940** generates the HO_REQ message upon receiving a control command from the controller **930**, and transmits the HO_REQ message to the serving BS.

FIG. **9** has disclosed the SS internal configuration according to the present invention. Operations of the SS will hereinafter be described with reference to FIG. **10**. FIG. **10** is a flow chart illustrating operations of the SS in accordance with a preferred embodiment of the present invention. Referring to FIG. **10**, the SS reads the DL_MAP message received from the serving BS at step **1000**, reads the UL_MAP message received from the serving BS at step **1002**, and reads the neighbor BS list information contained in the DL_MAP message at step **1004**. If the SS reads the neighbor BSs information at step **1004**, it sets an ID "i" indicative of the number of the neighbor BSs to "0" (i.e., i=0) at step **1004**.

The SS adds a number of 1 to a variable "i" (i.e., i=i+1), measures a CINR of a pilot signal transmitted from the i-th neighbor BS at step **1006**, and goes to step **1008**. In this case, it is assumed that the neighbor BSs' number transmitted from the serving BS is in the range from "BS_**1**" to "MAX_BS_NUM". Therefore, the SS measures a pilot signal CINR for the neighbor BSs' number "BS_**1**" at step **1006**, and determines whether the number of the neighbor BS having measured the pilot signal CINR is equal to or greater than "MAX_BS_NUM" at step **1008**. If it is determined the number of the measured neighbor BS is equal to or greater than "MAX_BS_NUM" at step **1008**, the SS goes to step **1010**. Otherwise, if it is determined that the number of the measured neighbor BS is less than "MAX_BS_NUM" at step **1008**, the SS returns to step **1006**.

If it is determined that the value of MAX_Neighbor BS CINR is equal to or less than the pilot signal CINR of the serving BS, the SS returns to step **1000**. Otherwise, if it is

determined that the value of MAX_Neighbor BS CINR is greater than the pilot signal CINR of the serving BS, the SS determines its own handover request, and goes to step **1012**.

The SS transmits the HO_REQ message to the serving BS at step **1012**. The detailed configuration of the HO_REQ message has been disclosed in the aforementioned Table 7. The SS receives the HO_RSP message associated with the HO_REQ message from the serving BS at step **1014**, and goes to step **1016**. The detailed configuration of the HO_RSP message has been disclosed in the aforementioned Table 10. The SS reads ID and carrier frequency information of the last target BS from among the HO_RSP message at step **1016**, and goes to step **1018**. In this case, the last target BS acts as a specific BS to which the SS is handed over.

The SS converts an SS frequency into a target BS frequency, and goes to step **1020**, such that data transmission/reception between the SS and the serving BS is interrupted and the SS can communicate with the last target BS. The SS reads the DL_MAP message received from the last target BS at step **1020**, and goes to step **1022**. The SS reads the UL_MAP message received from the last target BS, and goes to step **1024**. The SS communicates with the last target BS at step **1024**, and terminates its handover operation.

FIG. **10** has disclosed operations of the SS according to the present invention. Operations of the serving BS will hereinafter be described with reference to FIG. **11**. FIG. **11** is a flow chart illustrating operations of a serving BS in accordance with a preferred embodiment of the present invention. The serving BS transmits the DL_MAP message to the SS at step **1100**, and transmits the UL_MAP message to the SS at step **1102**.

The serving BS receives the HO_REQ message from the SS at step **1104**, and goes to step **1106**. The detailed configuration of the HO_REQ message has been disclosed in the aforementioned Table 7. The serving BS arranges CINRs of the pilot signals of the neighbor BSs in other of descending magnitude, and goes to step **1108**. In this case, the CINRs of the pilot signals of the neighbor BSs are contained in the HO_REQ message. As stated above, the neighbor BSs for commanding the SS to measure the pilot signal CINR act as candidate BSs which satisfy the MAX_T and MIN_T conditions, such that each candidate BS has a signal greater than a Pilot min CINR (i.e., a minimum pilot signal CINR). As previously stated in FIG. **10**, it is assumed that the number of neighbor BSs of the SS is in the range from BS_**1** to MAX_BS_NUM. In addition, the ID "i" indicative of the number of the neighbor BSs is set to "0" (i.e., i=0) at step **1106**. The ID indicative of the number "i" of the neighbor BSs is determined in the order of the pilot CINRs.

The serving BS transmits the HO_CONNECTION_REQ message to the neighbor BS having the greatest pilot CINR from among the arranged neighbor BSs at step **1108**. The detailed configuration of the HO_CONNECTION_REQ message has been shown in the aforementioned Table 8.

The serving BS receives the HO_CONNECTION_RSP message indicative of a response to the HO_CONNECTION_REQ message from the neighbor BS which have transmitted the HO_CONNECTION_REQ message at step **1110**, and goes to step **1112**. The detailed configuration of the HO_CONNECTION_RSP message has been disclosed in the aforementioned Table 9. The serving BS determines whether there is a neighbor BS capable of supporting a handover function of the SS in a plurality of neighbor BSs transmitting the SS handover request signals. In more detail, the serving BS determines whether the ACK message is contained in the HO_CONNECTION_RSP message. If it is determined that a specific neighbor BS from among the neighbor BSs can support the handover service for the SS, the serving BS goes to step **1116**. Otherwise, if it is determined that none of the neighbor BSs is able to support the handover service for the SS, the serving BS goes to step **1114**. The serving BS selects a neighbor BS with the second greatest pilot CINR from among the neighbor BSs and increases the variable "i" by one (i.e., i=i+1) at step **1114**, and returns to step **1108**.

The serving BS transmits the HO_RSP message to the SS at step **1116**, and goes to step **1118**. The detailed configuration of the HO_RSP message has been disclosed in the aforementioned Table 10. The serving BS transmits the HO_CONNECTION_CFM message to a neighbor BS (i.e., the last target BS) capable of supporting the handover function at step **1118**, and returns to step **1120**. The detailed configuration of the HO_CONNECTION_CFM message has been disclosed in the aforementioned Table 11. Needless to say, the serving BS may first transmit the HO_CONNECTION_CFM message to the last target BS, or may transmit the HO_RSP message to the SS. The serving BS releases the link connected to the SS at step **1120**, and terminates its handover operation.

As apparent from the above description, the present invention enables the SS based on a multi-cell structure to perform the handover operation, resulting in a guarantee of the SS's mobility. In more detail, the conventional SS performs a communication function in a single cell, such that it must cancel the link connected to a BS currently communicating with the SS when the SS moves to the other cell. Furthermore, the conventional SS must newly set up a communication mode with a new BS, such that it must newly perform the initial ranging process. However, in order to solve the aforementioned problems of the conventional SS, the present invention performs the handover process without performing the initial ranging process with the new BS, resulting in reduction of a data communication interruption time.

Although the preferred embodiments of the present invention have been disclosed for illustrative purposes, those skilled in the art will appreciate that various modifications, additions and substitutions are possible, without departing from the scope and spirit of the invention as disclosed in the accompanying claims.

What is claimed is:

1. A subscriber station (SS) handover method in a Broadband Wireless Access (BWA) communication system, comprising the steps of:

a) receiving from a serving Base Station (BS) information relating to a plurality of neighbor BSs adjacent to the serving BS;

b) measuring Carrier to Interference and Noise Ratios (CINRs) of pilot signals transmitted from the neighbor BSs upon receipt of the information relating to the neighbor BSs;

c) transmitting a handover request signal to the serving BS along with pilot signal CINR information of the neighbor BSs;

d) receiving from the serving BS information of a target BS from among the neighbor BSs; and

e) performing a handover function from the serving BS to the target BS.

2. The method as set forth in claim **1**, wherein the information of the neighbor BSs includes information indicative of the number of neighbor BSs, BS ID information for identifying the neighbor BSs, and individual carrier frequency information of the neighbor BSs.

3. The method as set forth in claim 1, wherein step (c) includes the steps of:

c1) detecting from among the pilot signal CINRs of the neighbor BSs pilot signal CINRs of neighbor BSs having a predetermined minimum pilot signal CINR;

c2) detecting pilot signal CINRs greater than those of the serving BS during more than a predetermined minimum time from among neighbor BSs' pilot CINRs greater than the minimum pilot signal CINR; and

c3) transmitting a handover request signal to the serving BS along with the pilot signal CINR greater than that of the serving BS during more than the predetermined minimum time.

4. The method as set forth in claim 3, further comprising the step of:

f) controlling the SS so not to perform a pilot signal CINR measurement operation in association with a neighbor BS for transmitting a pilot signal less than the minimum pilot signal CINR.

5. The method as set forth in claim 1, wherein the handover request signal includes QoS (Quality of Service) information of a service desired by the SS and requested bandwidth information associated with the service.

6. The method as set forth in claim 1, further comprising:

f) terminating step c), by the serving BS, if it is determined that a specific neighbor BS from among the neighbor BSs can support the handover service for the SS.

7. A serving Base Station (BS) handover method in a Broadband Wireless Access (BWA) communication system, comprising the steps of:

a) transmitting to a Subscriber Station (SS) information relating to the neighbor BSs;

b) receiving a handover request signal containing Carrier to Interference and Noise Ratio (CINR) information of pilot signals of a plurality of neighbor BSs adjacent to the serving BS from the SS;

c) checking if the neighbor BSs contained in the handover request signal can support a handover function for the SS, and selecting a target BS acting as a handover target of the SS from among neighbor BSs capable of supporting the handover function for the SS; and

d) transmitting information to the target BS indicating that the target BS is designated as a BS to which the SS is to be handed over.

8. The method as set forth in claim 7, wherein the handover request signal includes Quality of Service (QoS) information of a service desired by the SS and requested bandwidth information associated with the service.

9. The method as set forth in claim 8, wherein step (c) for determining whether the neighbor BSs contained in the handover request signal can support the handover function for the SS includes the step of:

c1) determining whether each of the neighbor BSs are able to support the QoS and requested bandwidth information.

10. The method as set forth in claim 7, wherein the information of the neighbor BSs includes information indicative of the number of neighbor BSs, BS ID information of the neighbor BSs, and carrier frequency information of the neighbor BS.

11. The method as set forth in claim 7, wherein step (d) includes the step of:

d1) transmitting the information to the target BS using a BS ID of the target BS and a CID (Connection ID) assigned from the serving BS to the SS.

12. The method as set forth in claim 7, further comprising the step of:

e) if it is not possible for any one of the neighbor BSs contained in the handover request signal to support the handover function, informing the SS of the handover unable state.

13. The method as set forth in claim 7, wherein step (b) further includes:

b1) arranging the neighbor BSs based on the CINR information.

14. A Subscriber Station (SS) handover method in a Broadband Wireless Access (BWA) communication system, comprising the steps of:

a) receiving from a serving Base Station (BS) information relating to a plurality of neighbor BSs adjacent to the serving BS and handover condition information;

b) measuring Carrier to Interference and Noise Ratios (CINRs) of pilot signals transmitted from the neighbor BSs upon receipt of the neighbor BSs information;

c) selecting a plurality of candidate BSs corresponding to the handover condition information from among the neighbor BSs, and transmitting a handover request signal to the serving BS along with pilot signal CINR information of the candidate BSs;

d) upon receipt of the handover request signal, receiving from the serving BS information of a target BS from among the candidate BSs; and

e) performing a handover function from the serving BS to the target BS.

15. The method as set forth in claim 14, wherein the information of the neighbor BSs includes information indicative of the number of neighbor BSs, BS ID information for identifying the neighbor BSs, carrier frequency information of the neighbor BSs, and frequency offset and frame offset information of the neighbor BSs.

16. The method as set forth in claim 14, wherein the handover condition information includes a minimum pilot signal CINR, a maximum time during which a specific neighbor BS selected from among the neighbor BSs to have a CINR less than the minimum pilot signal CINR can act as the candidate BS, a minimum time during which a pilot signal CINR of either one candidate BS from among the candidate BSs must be greater than that of the serving BS to perform the handover function of the SS.

17. The method as set forth in claim 16, further comprising the step of:

f) controlling the SS not to measure a pilot signal CINR in association with the neighbor BS transmitting a pilot signal less than the minimum pilot signal CINR.

18. The method as set forth in claim 14, wherein the handover request signal includes Quality of Service (QoS) information of a service desired by the SS and requested bandwidth information associated with the service.

19. A handover method in a Broadband Wireless Access (BWA) communication system, comprising the steps of:

a) controlling a serving Base Station (BS) to transmit to a Subscriber Station (SS) information of a plurality of neighbor BSs and handover condition information;

b) controlling the SS to measure Carrier to Interference and Noise Ratios (CINRs) of pilot signals transmitted from the neighbor BSs adjacent to the serving BS according to the neighbor BSs information;

c) controlling the SS to determine a plurality of candidate BSs corresponding to handover condition information from among the neighbor BSs, and transmitting to the serving BS a handover request signal along with pilot signal CINR information of the candidate BSs;

d) if the serving BS receives the handover request signal from the SS, checking if the neighbor BSs contained in the handover request signal can support a handover function for the SS, and selecting a target BS acting as a handover target of the SS from among candidate BSs capable of supporting the handover function for the SS;

e) controlling the serving BS to transmit information to the target BS indicating that the target BS is designated as a BS to which the SS is to be handed over; and

f) controlling the SS to perform a handover operation from the serving BS to the target BS according to the target BS information contained in the handover request response signal.

20. The method as set forth in claim **19**, wherein the information of the neighbor BSs includes information indicative of the number of neighbor BSs, BS ID information for identifying the neighbor BSs, carrier frequency information of the neighbor BSs, and frequency offset and frame offset information of the neighbor BSs.

21. The method as set forth in claim **19**, wherein the handover condition information includes a minimum pilot signal CINR, a maximum time during which a specific neighbor BS selected from among the neighbor BSs to have a C1NR less than the minimum pilot signal CINR can act as the candidate BS, a minimum time during which a pilot signal CINR of either one candidate BS from among the candidate BSs must be greater than that of the serving BS to perform the handover function of the SS.

22. The method as set forth in claim **21**, further comprising the step of:

g) controlling the SS so not to measure a pilot signal CINR in association with the neighbor BS transmitting a pilot signal less than the minimum pilot signal CINR.

23. The method as set forth in claim **22**, wherein the handover request signal includes Quality of Service (QoS) information of a service desired by the SS and requested bandwidth information associated with the service.

24. The method as set forth in claim **23**, wherein step (d) for checking whether the candidate BSs contained in the handover request signal can support the handover function for the SS includes the step of:

d1) determining whether each of the candidate BSs are able to support the QoS and requested bandwidth information.

25. The method as set forth in claim **19**, wherein step (e) includes the step of:

e1) transmitting the information to the target BS using a BS ID of the target BS and a CID (Connection ID) assigned from the serving BS to the SS.

26. The method as set forth in claim **19**, further comprising the step of:

h) if it is not possible for any of the neighbor BSs contained in the handover request signal to support the handover function, controlling the serving BS to inform the SS of the handover unable state.

27. The method as set forth in claim **19**, further comprising the step of:

i) if the serving BS transmits to the SS a response signal associated with the handover request signal, controlling the serving BS to release a link connected to the SS.

28. A handover apparatus in a Broadband Wireless Access (BWA) communication system, comprising:

a serving Base Station (BS), which transmits information of a plurality of neighbor BSs adjacent to the serving BS and handover condition information to the SS, checks if the neighbor BSs contained in the handover request signal can support a handover function for the SS upon receiving the handover request signal from the SS, selects a target BS acting as a handover target of the SS from among candidate BSs capable of supporting the handover function for the SS, transmits information to the target BS indicating that the target BS is designated as a BS to which the SS is to be handed over; and

the SS, which measures CINR Carrier to Interference and Noise Ratios (CINRs) of pilot signals transferred from the neighbor BSs according to the neighbor BSs information, selects a plurality of candidate BSs corresponding to handover condition information from among the neighbor BSs, transmits a handover request signal to the serving BS along with pilot signal CINR information of the candidate BSs, and performs a handover operation from the serving BS to the target BS according to the target BS information contained in the handover request response signal.

29. The apparatus as set forth in claim **28**, wherein the information of the neighbor BSs includes information indicative of the number of neighbor BSs, BS ID information for identifying the neighbor BSs, carrier frequency information of the neighbor BSs, and frequency offset and frame offset information of the neighbor BSs.

30. The apparatus as set forth in claim **28**, wherein the handover condition information includes a minimum pilot signal CINR, a maximum time during which a specific neighbor BS selected from among the neighbor BSs to have a CINR less than the minimum pilot signal CINR can act as the candidate BS, a minimum time during which a pilot signal CINR of either one candidate BS from among the candidate BSs must be greater than that of the serving BS to perform the handover function of the SS.

31. The apparatus as set forth in claim **20**, wherein the SS does not measure a pilot signal CINR in association with the neighbor BS transmitting a pilot signal less than the minimum pilot signal CINR.

32. The apparatus as set forth in claim **20**, wherein the handover request signal includes Quality of Service (QoS) information of a service desired by the SS and requested bandwidth information associated with the service.

33. The apparatus as set forth in claim **32**, wherein the serving BS checks whether each of the candidate BSs are able to support the QoS and requested bandwidth information such that it can determine if the candidate BSs are able to support the handover function for the SS.

34. The apparatus as set forth in claim **28**, wherein the serving BS informs the target BS transmits the information to the target BS using a BS ID of the target BS and a CID (Connection ID) assigned from the serving BS to the SS.

35. The apparatus as set forth in claim **28**, wherein the serving BS, if it is not possible for any one of the candidate BSs contained in the handover request signal to support the handover function for the SS, informs the SS of the handover unable state.

36. The apparatus as set forth in claim **28**, wherein the serving BS transmits a response signal associated with the handover request signal to the SS, and releases a link connected to the SS.

* * * * *