PTO/AIA/14 (11-15)
Approved for use through 04/30/2017. OMB 0651-0032
U.S. Patent and Trademark Office; U.S. DEPARTMENT OF COMMERCE
Under the Paperwork Reduction Act of 1995, no persons are required to respond to a collection of information unless it contains a valid OMB control number.

Application Data Sheet 37 CFR 1.76	Attorney Docket Number	DP-322037 CON
	Application Number	
Title of Invention	FLEXIBLE MOBILE DEVICE CONNECTIVITY TO AUTOMOTIVE SYSTEMS WITH UBS HUBS	

The application data sheet is part of the provisional or nonprovisional application for which it is being submitted. The following form contains the bibliographic data arranged in a format specified by the United States Patent and Trademark Office as outlined in 37 CFR 1.76.
This document may be completed electronically and submitted to the Office in electronic format using the Electronic Filing System (EFS) or the document may be printed and included in a paper filed application.

Secrecy Order 37 CFR 5.2:

☐ Portions or all of the application associated with this Application Data Sheet may fall under a Secrecy Order pursuant to 37 CFR 5.2 (Paper filers only. Applications that fall under Secrecy Order may not be filed electronically.)

Inventor Information:

Inventor 1 Remove

Legal Name

Prefix	Given Name	Middle Name	Family Name	Suffix
	Robert	M.	Voto	

Residence Information (Select One) ● US Residency Non US Residency Active US Military Service

City	Clarkston	State/Province	MI	Country of Residence i	US

Mailing Address of Inventor:

Address 1	7054 Oakhurst Ridge
Address 2	
City	Clarkston
State/Province	MI
Postal Code	48348
Country i	US

Inventor 2 Remove

Legal Name

Prefix	Given Name	Middle Name	Family Name	Suffix
	Shyambabu		Yeda	

Residence Information (Select One) ◉ US Residency Non US Residency Active US Military Service

City	Rochester Hills	State/Province	MI	Country of Residence i	US

Mailing Address of Inventor:

Address 1	2134 Cattail Circle
Address 2	
City	Rochester Hills
State/Province	MI
Postal Code	48309
Country i	US

Inventor 3 Remove

Legal Name

Prefix	Given Name	Middle Name	Family Name	Suffix
	Craig	Allan	Petku	

Residence Information (Select One) ◉ US Residency Non US Residency Active US Military Service

PTO/AIA/14 (11-15)
Approved for use through 04/30/2017. OMB 0651-0032
U.S. Patent and Trademark Office; U.S. DEPARTMENT OF COMMERCE
Under the Paperwork Reduction Act of 1995, no persons are required to respond to a collection of information unless it contains a valid OMB control number.

Application Data Sheet 37 CFR 1.76	Attorney Docket Number	DP-322037 CON
	Application Number	
Title of Invention	FLEXIBLE MOBILE DEVICE CONNECTIVITY TO AUTOMOTIVE SYSTEMS WITH UBS HUBS	

City	Clarkston	State/Province	MI	Country of Residence i	US

Mailing Address of Inventor:

Address 1	5188 Iroquois Court		
Address 2			
City	Clarkston	**State/Province**	MI
Postal Code	48348	**Country** i	US

All Inventors Must Be Listed - Additional Inventor Information blocks may be generated within this form by selecting the **Add** button. Add

Correspondence Information:

Enter either Customer Number or complete the Correspondence Information section below. For further information see 37 CFR 1.33(a).

☐ **An Address is being provided for the correspondence Information of this application.**

Customer Number	22851		
Email Address		Add Email	Remove Email

Application Information:

Title of the Invention	FLEXIBLE MOBILE DEVICE CONNECTIVITY TO AUTOMOTIVE SYSTEMS WITH UBS HUBS		
Attorney Docket Number	DP-322037 CON	**Small Entity Status Claimed**	☐
Application Type	Nonprovisional		
Subject Matter	Utility		
Total Number of Drawing Sheets (if any)	8	**Suggested Figure for Publication (if any)**	

Filing By Reference:

Only complete this section when filing an application by reference under 35 U.S.C. 111(c) and 37 CFR 1.57(a). Do not complete this section if application papers including a specification and any drawings are being filed. Any domestic benefit or foreign priority information must be provided in the appropriate section(s) below (i.e., "Domestic Benefit/National Stage Information" and "Foreign Priority Information").

For the purposes of a filing date under 37 CFR 1.53(b), the description and any drawings of the present application are replaced by this reference to the previously filed application, subject to conditions and requirements of 37 CFR 1.57(a).

Application number of the previously filed application	Filing date (YYYY-MM-DD)	Intellectual Property Authority or Country i

Publication Information:

☐ Request Early Publication (Fee required at time of Request 37 CFR 1.219)

☐ **Request Not to Publish.** I hereby request that the attached application not be published under 35 U.S.C. 122(b) and certify that the invention disclosed in the attached application **has not and will not** be the subject of an application filed in another country, or under a multilateral international agreement, that requires publication at eighteen months after filing.

Under the Paperwork Reduction Act of 1995, no persons are required to respond to a collection of information unless it contains a valid OMB control number.

Application Data Sheet 37 CFR 1.76	Attorney Docket Number	DP-322037 CON
	Application Number	
Title of Invention	FLEXIBLE MOBILE DEVICE CONNECTIVITY TO AUTOMOTIVE SYSTEMS WITH UBS HUBS	

Representative Information:

Representative information should be provided for all practitioners having a power of attorney in the application. Providing this information in the Application Data Sheet does not constitute a power of attorney in the application (see 37 CFR 1.32).
Either enter Customer Number or complete the Representative Name section below. If both sections are completed the customer Number will be used for the Representative Information during processing.

Please Select One:	● Customer Number	US Patent Practitioner	◯ Limited Recognition (37 CFR 11.9)
Customer Number	22851		

Domestic Benefit/National Stage Information:

This section allows for the applicant to either claim benefit under 35 U.S.C. 119(e), 120, 121, 365(c), or 386(c) or indicate National Stage entry from a PCT application. Providing benefit claim information in the Application Data Sheet constitutes the specific reference required by 35 U.S.C. 119(e) or 120, and 37 CFR 1.78.
When referring to the current application, please leave the "Application Number" field blank.

Prior Application Status	Pending		Remove
Application Number	Continuity Type	Prior Application Number	Filing or 371(c) Date (YYYY-MM-DD)
	Continuation of	14487947	2014-09-16
Prior Application Status			Remove
Application Number	Continuity Type	Prior Application Number	Filing or 371(c) Date (YYYY-MM-DD)
14487947	Claims benefit of provisional	61882915	2013-09-26

Additional Domestic Benefit/National Stage Data may be generated within this form by selecting the **Add** button. Add

Foreign Priority Information:

This section allows for the applicant to claim priority to a foreign application. Providing this information in the application data sheet constitutes the claim for priority as required by 35 U.S.C. 119(b) and 37 CFR 1.55. When priority is claimed to a foreign application that is eligible for retrieval under the priority document exchange program (PDX)[i] the information will be used by the Office to automatically attempt retrieval pursuant to 37 CFR 1.55(i)(1) and (2). Under the PDX program, applicant bears the ultimate responsibility for ensuring that a copy of the foreign application is received by the Office from the participating foreign intellectual property office, or a certified copy of the foreign priority application is filed, within the time period specified in 37 CFR 1.55(g)(1).

Under the Paperwork Reduction Act of 1995, no persons are required to respond to a collection of information unless it contains a valid OMB control number.

Application Data Sheet 37 CFR 1.76	Attorney Docket Number	DP-322037 CON
	Application Number	
Title of Invention	FLEXIBLE MOBILE DEVICE CONNECTIVITY TO AUTOMOTIVE SYSTEMS WITH UBS HUBS	

Remove

Application Number	Country[i]	Filing Date (YYYY-MM-DD)	Access Code[i] (if applicable)

Additional Foreign Priority Data may be generated within this form by selecting the **Add** button. Add

Statement under 37 CFR 1.55 or 1.78 for AIA (First Inventor to File) Transition Applications

☐ This application (1) claims priority to or the benefit of an application filed before March 16, 2013 and (2) also contains, or contained at any time, a claim to a claimed invention that has an effective filing date on or after March 16, 2013.
NOTE: By providing this statement under 37 CFR 1.55 or 1.78, this application, with a filing date on or after March 16, 2013, will be examined under the first inventor to file provisions of the AIA.

Application Data Sheet 37 CFR 1.76	Attorney Docket Number	DP-322037 CON
	Application Number	
Title of Invention	FLEXIBLE MOBILE DEVICE CONNECTIVITY TO AUTOMOTIVE SYSTEMS WITH UBS HUBS	

Authorization or Opt-Out of Authorization to Permit Access:

When this Application Data Sheet is properly signed and filed with the application, applicant has provided written authority to permit a participating foreign intellectual property (IP) office access to the instant application-as-filed (see paragraph A in subsection 1 below) and the European Patent Office (EPO) access to any search results from the instant application (see paragraph B in subsection 1 below).

Should applicant choose not to provide an authorization identified in subsection 1 below, applicant **must opt-out** of the authorization by checking the corresponding box A or B or both in subsection 2 below.

NOTE: This section of the Application Data Sheet is **ONLY** reviewed and processed with the **INITIAL** filing of an application. After the initial filing of an application, an Application Data Sheet cannot be used to provide or rescind authorization for access by a foreign IP office(s). Instead, Form PTO/SB/39 or PTO/SB/69 must be used as appropriate.

1. Authorization to Permit Access by a Foreign Intellectual Property Office(s)

A. Priority Document Exchange (PDX) - Unless box A in subsection 2 (opt-out of authorization) is checked, the undersigned hereby **grants the USPTO authority** to provide the European Patent Office (EPO), the Japan Patent Office (JPO), the Korean Intellectual Property Office (KIPO), the State Intellectual Property Office of the People's Republic of China (SIPO), the World Intellectual Property Organization (WIPO), and any other foreign intellectual property office participating with the USPTO in a bilateral or multilateral priority document exchange agreement in which a foreign application claiming priority to the instant patent application is filed, access to: (1) the instant patent application-as-filed and its related bibliographic data, (2) any foreign or domestic application to which priority or benefit is claimed by the instant application and its related bibliographic data, and (3) the date of filing of this Authorization. See 37 CFR 1.14(h)(1).

B. Search Results from U.S. Application to EPO - Unless box B in subsection 2 (opt-out of authorization) is checked, the undersigned hereby **grants the USPTO authority** to provide the EPO access to the bibliographic data and search results from the instant patent application when a European patent application claiming priority to the instant patent application is filed. See 37 CFR 1.14(h)(2).

The applicant is reminded that the EPO's Rule 141(1) EPC (European Patent Convention) requires applicants to submit a copy of search results from the instant application without delay in a European patent application that claims priority to the instant application.

2. Opt-Out of Authorizations to Permit Access by a Foreign Intellectual Property Office(s)

☐ A. Applicant **DOES NOT** authorize the USPTO to permit a participating foreign IP office access to the instant application-as-filed. If this box is checked, the USPTO will not be providing a participating foreign IP office with any documents and information identified in subsection 1A above.

☐ B. Applicant **DOES NOT** authorize the USPTO to transmit to the EPO any search results from the instant patent application. If this box is checked, the USPTO will not be providing the EPO with search results from the instant application.

NOTE: Once the application has published or is otherwise publicly available, the USPTO may provide access to the application in accordance with 37 CFR 1.14.

Under the Paperwork Reduction Act of 1995, no persons are required to respond to a collection of information unless it contains a valid OMB control number.

Application Data Sheet 37 CFR 1.76	Attorney Docket Number	DP-322037 CON
	Application Number	
Title of Invention	FLEXIBLE MOBILE DEVICE CONNECTIVITY TO AUTOMOTIVE SYSTEMS WITH UBS HUBS	

Applicant Information:

Providing assignment information in this section does not substitute for compliance with any requirement of part 3 of Title 37 of CFR to have an assignment recorded by the Office.

Applicant 1 Remove

If the applicant is the inventor (or the remaining joint inventor or inventors under 37 CFR 1.45), this section should not be completed. The information to be provided in this section is the name and address of the legal representative who is the applicant under 37 CFR 1.43; or the name and address of the assignee, person to whom the inventor is under an obligation to assign the invention, or person who otherwise shows sufficient proprietary interest in the matter who is the applicant under 37 CFR 1.46. If the applicant is an applicant under 37 CFR 1.46 (assignee, person to whom the inventor is obligated to assign, or person who otherwise shows sufficient proprietary interest) together with one or more joint inventors, then the joint inventor or inventors who are also the applicant should be identified in this section.

Clear

● Assignee	Legal Representative under 35 U.S.C. 117	Joint Inventor
Person to whom the inventor is obligated to assign.	Person who shows sufficient proprietary interest	

If applicant is the legal representative, indicate the authority to file the patent application, the inventor is:

Name of the Deceased or Legally Incapacitated Inventor:

If the Applicant is an Organization check here. ☒

Organization Name	DELPHI TECHNOLOGIES, INC.		
Mailing Address Information For Applicant:			
Address 1	P. O. BOX 5052		
Address 2	M/C: 483-400-402		
City	TROY	**State/Province**	MI
Country	US	Postal Code	48007-5052
Phone Number		Fax Number	
Email Address			

Additional Applicant Data may be generated within this form by selecting the Add button. Add

Assignee Information including Non-Applicant Assignee Information:

Providing assignment information in this section does not substitute for compliance with any requirement of part 3 of Title 37 of CFR to have an assignment recorded by the Office.

Under the Paperwork Reduction Act of 1995, no persons are required to respond to a collection of information unless it contains a valid OMB control number.

Application Data Sheet 37 CFR 1.76	Attorney Docket Number	DP-322037 CON
	Application Number	
Title of Invention	FLEXIBLE MOBILE DEVICE CONNECTIVITY TO AUTOMOTIVE SYSTEMS WITH UBS HUBS	

Assignee 1

Complete this section if assignee information, including non-applicant assignee information, is desired to be included on the patent application publication. An assignee-applicant identified in the "Applicant Information" section will appear on the patent application publication as an applicant. For an assignee-applicant, complete this section only if identification as an assignee is also desired on the patent application publication.

Remove

If the Assignee or Non-Applicant Assignee is an Organization check here. ☐

Prefix	**Given Name**	Middle Name	**Family Name**	Suffix

Mailing Address Information For Assignee including Non-Applicant Assignee:

Address 1			
Address 2			
City		**State/Province**	
Country i		Postal Code	
Phone Number		Fax Number	
Email Address			

Additional Assignee or Non-Applicant Assignee Data may be generated within this form by selecting the Add button. Add

Signature:

Remove

NOTE: This Application Data Sheet must be signed in accordance with 37 CFR 1.33(b). **However, if this Application Data Sheet is submitted with the INITIAL filing of the application and either box A or B is not checked in subsection 2 of the "Authorization or Opt-Out of Authorization to Permit Access" section, then this form must also be signed in accordance with 37 CFR 1.14(c).**

This Application Data Sheet **must** be signed by a patent practitioner if one or more of the applicants is a **juristic entity** (e.g., corporation or association). If the applicant is two or more joint inventors, this form must be signed by a patent practitioner, **all** joint inventors who are the applicant, or one or more joint inventor-applicants who have been given power of attorney (e.g., see USPTO Form PTO/AIA/81) on behalf of **all** joint inventor-applicants.

See 37 CFR 1.4(d) for the manner of making signatures and certifications.

Signature	/Robert J. Myers/			Date (YYYY-MM-DD)	2016-09-19
First Name	Robert	Last Name	Myers	Registration Number	69783

Additional Signature may be generated within this form by selecting the Add button. Add

Application Data Sheet 37 CFR 1.76	Attorney Docket Number	DP-322037 CON
	Application Number	
Title of Invention	FLEXIBLE MOBILE DEVICE CONNECTIVITY TO AUTOMOTIVE SYSTEMS WITH UBS HUBS	

This collection of information is required by 37 CFR 1.76. The information is required to obtain or retain a benefit by the public which is to file (and by the USPTO to process) an application. Confidentiality is governed by 35 U.S.C. 122 and 37 CFR 1.14. This collection is estimated to take 23 minutes to complete, including gathering, preparing, and submitting the completed application data sheet form to the USPTO. Time will vary depending upon the individual case. Any comments on the amount of time you require to complete this form and/or suggestions for reducing this burden, should be sent to the Chief Information Officer, U.S. Patent and Trademark Office, U.S. Department of Commerce, P.O. Box 1450, Alexandria, VA 22313-1450. DO NOT SEND FEES OR COMPLETED FORMS TO THIS ADDRESS. **SEND TO: Commissioner for Patents, P.O. Box 1450, Alexandria, VA 22313-1450.**

Privacy Act Statement

The Privacy Act of 1974 (P.L. 93-579) requires that you be given certain information in connection with your submission of the attached form related to a patent application or patent. Accordingly, pursuant to the requirements of the Act, please be advised that: (1) the general authority for the collection of this information is 35 U.S.C. 2(b)(2); (2) furnishing of the information solicited is voluntary; and (3) the principal purpose for which the information is used by the U.S. Patent and Trademark Office is to process and/or examine your submission related to a patent application or patent. If you do not furnish the requested information, the U.S. Patent and Trademark Office may not be able to process and/or examine your submission, which may result in termination of proceedings or abandonment of the application or expiration of the patent.

The information provided by you in this form will be subject to the following routine uses:

1 The information on this form will be treated confidentially to the extent allowed under the Freedom of Information Act (5 U.S.C. 552) and the Privacy Act (5 U.S.C. 552a). Records from this system of records may be disclosed to the Department of Justice to determine whether the Freedom of Information Act requires disclosure of these records.

2. A record from this system of records may be disclosed, as a routine use, in the course of presenting evidence to a court, magistrate, or administrative tribunal, including disclosures to opposing counsel in the course of settlement negotiations.

3 A record in this system of records may be disclosed, as a routine use, to a Member of Congress submitting a request involving an individual, to whom the record pertains, when the individual has requested assistance from the Member with respect to the subject matter of the record.

4. A record in this system of records may be disclosed, as a routine use, to a contractor of the Agency having need for the information in order to perform a contract. Recipients of information shall be required to comply with the requirements of the Privacy Act of 1974, as amended, pursuant to 5 U.S.C. 552a(m).

5. A record related to an International Application filed under the Patent Cooperation Treaty in this system of records may be disclosed, as a routine use, to the International Bureau of the World Intellectual Property Organization, pursuant to the Patent CooperationTreaty.

6. A record in this system of records may be disclosed, as a routine use, to another federal agency for purposes of National Security review (35 U.S.C. 181) and for review pursuant to the Atomic Energy Act (42 U.S.C. 218(c)).

7. A record from this system of records may be disclosed, as a routine use, to the Administrator, General Services, or his/her designee, during an inspection of records conducted by GSA as part of that agency's responsibility to recommend improvements in records management practices and programs, under authority of 44 U.S.C. 2904 and 2906. Such disclosure shall be made in accordance with the GSA regulations governing inspection of records for this purpose, and any other relevant (i.e., GSA or Commerce) directive. Such disclosure shall not be used to make determinations about individuals.

8. A record from this system of records may be disclosed, as a routine use, to the public after either publication of the application pursuant to 35 U.S.C. 122(b) or issuance of a patent pursuant to 35 U.S.C. 151. Further, a record may be disclosed, subject to the limitations of 37 CFR 1.14, as a routine use, to the public if the record was filed in an application which became abandoned or in which the proceedings were terminated and which application is referenced by either a published application, an application open to public inspections or an issued patent.

9. A record from this system of records may be disclosed, as a routine use, to a Federal, State, or local law enforcement agency, if the USPTO becomes aware of a violation or potential violation of law or regulation.

FLEXIBLE MOBILE DEVICE CONNECTIVITY TO AUTOMOTIVE SYSTEMS WITH USB HUBS

Related Applications

This application is a continuation application and claims benefit under 35 U.S.C. § 120 of U.S. Patent Application No. 14/487,947, filed September 16, 2014, which claimed benefit under 35 U.S.C. § 119(e) of U.S. Provisional Patent Application No. 61/882,915, filed on September 26, 2013, the entire disclosure of each of which are hereby incorporated herein by reference.

Background

The present invention generally relates to Universal Serial Bus ("USB") connectivity between, for example, mobile consumer devices and vehicle electronic systems. More specifically, the present invention relates to a system which is configured to provide that consumer devices that act as either USB host or USB device can connect to a vehicle's embedded USB host that does not have On the Go ("OTG") capability through an embedded USB hub in the vehicle.

Historically, mobile consumer devices such as media players, smart phones, tablets and the like have relied on connections to other devices, such as laptop or desktop personal computers ("PC's") to acquire content, exchange data, and charge the device's internal battery. For many years now, that has been accomplished through USB ports on each device. The use of USB technology is suitable for such needs since it is commonly available, familiar to the end user, cost effective and ubiquitous. USB protocols require a point-to-point connection in which one end is the USB Host or master, and the other end is a USB Device or slave. In this way, the

Microchip Ex. 1004, p. 10
Microchip v. Aptiv
IPR2024-00558

flow of messages between the two devices is managed and controlled, whereby the USB Device responds to messages initiated by the USB Host. Historically, PC's have provided USB Host ports for connection to simpler USB Devices such as printers, memory sticks, mobile phones, etc. The USB Host has a greater burden of software and hardware requirements than a USB Device, so it has made sense to designate the PC as the USB Host in such systems.

In vehicle systems that employ USB connections, the same concepts apply. In such systems, the vehicle is typically the USB Host. The USB Host function is often embedded into a component of the vehicle infotainment system, such as into the radio or other control module. Typically, multiple USB ports are strategically designed into the vehicle in locations convenient for the driver and passengers to connect their consumer devices. Once a consumer device is connected to one of the ports, the device begins charging and the vehicle infotainment system can access content on the consumer device. This is useful to enable features such as streaming music, video and other services the device may provide.

Such a system requires that each of the USB ports be physically connected to the vehicle's USB Host in a manner suitable for USB data flow. This is accomplished through electrical cabling which is embedded in the vehicle, and which connects each of the ports to the USB Host. Since there can be many USB ports in a vehicle, and each port requires a cable to connect the port to the USB Host, it is desirable to share cabling when possible to minimize cost and mass of the vehicle. This is accomplished through the use of USB Hubs. USB Hubs allow a single USB Host to connect to multiple USB Devices over a single cable between the USB Host and the USB Hub. As shown in Figures 1 and 2, a single USB Hub can connect one USB Host to several USB Devices. Specifically, Figure 1 illustrates a system wherein a self-powered USB

Microchip Ex. 1004, p. 11
Microchip v. Aptiv
IPR2024-00558

Hub having a plurality of USB ports connects to a plurality of USB Devices (via a plurality of consumer-facing USB ports), while Figure 2 illustrates a system wherein a self-powered USB Hub provides not only a plurality of USB ports which are in communication with a plurality of consumer-facing USB ports, but also a Secure Digital ("SD") card reader which is connected to a consumer-facing SD card connector. Other portions of Figures 1 and 2, such as Power Management, are standard in the industry and self-explanatory upon viewing Figures 1 and 2.

Furthermore, as shown in Figure 3, multiple USB Hubs can be tiered, such that USB Hubs connect to other USB Hubs. Specifically, Figure 3 illustrates a vehicle system architecture that includes a central vehicle microcontroller (also referred to as the Head Unit or "HU"). Connected to the Head Unit are components or systems such as displays, the audio system, entertainment system and the driver controls. The Head Unit may be architected as a single module encompassing all functions or distributed such that various functions are managed by individual modules. The Head Unit includes a Root USB Hub which is typically connected to one or more downstream USB Hubs distributed throughout the vehicle. Each USB Hub has a plurality of downstream ports (at least one of which may be an SD reader or USB audio device), thereby effectively providing that each USB port in the vehicle has a connection to the USB Host or Head Unit. In Figure 3, for example, the Root Hub is embedded in the radio, and is connected to four (4) self-powered USB Hubs, wherein one is in the vehicle's center console, one is in the vehicle's center stack, and two are in the vehicle's rear seats.

Recently, mobile devices such as smart phones have gained in popularity. This is, in part, due to their usefulness as standalone computing devices. With advances in consumer electronic technology and increases in the speed of mobile networks, these devices are no longer

reliant on being connected to PCs to access content. These smart mobile devices now have many of the same hardware resources, connectivity and software operating systems that only PCs had in past years. As has been the case with desktop PCs, accessories for these mobile devices have become available to aid in their ease of use. These accessories have included devices such as keyboards, mice, displays, touchscreen, audio systems, and other interface devices. These accessories commonly connect via a USB connection. By way of established convention in the consumer electronics market, these accessories are typically low cost and limited in USB capability to act only as a USB Device. To connect them to a smart phone, the smart phone must be the USB Host. Therefore, leading mobile device manufacturers and system designers have begun designing their mobile device products (i.e. smart phones, tablets, etc.) to support both USB Host and USB Device roles. In other words, the phone may configure itself such that it can function as a USB Device when it needs to be, or as a USB Host when it needs to be. Recently, the system level design thinking has shifted towards viewing smart phones as the USB Host, and any device connecting thereto as the USB Device. Again, this is not surprising since this is exactly how laptops and PCs work today. Extending this trend into the future, it can be predicted that the smart phone will act primarily as the USB Host, and will rarely or never act as a USB device. This presents some problems for automotive systems.

As explained previously, automotive systems have a USB Host and require USB Devices to connect to it. If a phone acts as a USB Host, then the system will not function since by USB convention, two USB Hosts cannot directly connect with each other. Automotive manufacturers desire compatibility with smart phones and are therefore motivated to adapt to this changing technology. A redesign of the USB architecture in the vehicle is thus necessary such that the

vehicle can act either as the USB Host (when necessary to connect to USB Devices such as memory sticks, thumb drives, etc.) or USB Device (when necessary to connect to USB Hosts, such as a smart phone which demands to be USB Host rather than USB Device.

The USB organization has added a standard that addresses the need for devices to act as either USB Host or USB Device and as such can be considered a "dual role" USB controller. It is referred to in USB nomenclature as "On the Go" or "OTG" for short. Any device that meets the OTG standard can act as either USB Host or USB Device and can change roles dynamically. Therefore, one possible approach to modifying the vehicle USB architecture to support all use cases is to upgrade the vehicle's USB Host to USB OTG. This solution addresses the issue but has some disadvantages. First, USB Hubs do not support OTG and can no longer be used in the system. Each consumer accessible USB port that supports OTG must have a dedicated wire link to a dedicated OTG controller in the Head Unit thus negating the wiring savings associated with use of USB Hubs. As a result several costly cables may need to be added to the vehicle's electrical system. Second, there may not be enough OTG controllers available in the Head Unit to connect to each of the vehicle's user accessible USB ports. This then forces the vehicle designer to choose a limited number of the many USB ports in the vehicle to support the OTG function and run dedicated USB cables to them. This can lead to user confusion and dissatisfaction since only certain consumer ports support the required functionality. Also, ports that support OTG may be co-located with other physically identical ports that do not. If the user chooses the wrong one, the applications they desire to run from the consumer device that requires USB Host mode won't work.

Another possible solution is to implement custom USB hubs wherein the USB Hub is able to dynamically swap its upstream port with one it's downstream ports when commanded to do so. System solutions built with this concept still require OTG controllers in the head unit but benefit from the fact that no additional wires need to be installed in the car. The existing USB cable between the USB OTG Host and the USB Hub can facilitate the necessary USB communications between the USB OTG controller in the Head Unit (HU) and a consumer device in USB Host (such as a smart phone). This solution also has some disadvantages however. For example, when the USB Hub is commanded to swap its upstream port with a downstream port, all other downstream ports of the USB Hubs lose their data connection with the Head Unit. While in this mode the Head Unit access to the other downstream ports of the hub cease. This may prevent use of certain vehicle system functions such as navigation or audio playback that may need consistent access to the other downstream ports of the hub to function. Furthermore, it requires the HU to have an available USB OTG port and a signaling path to control the hub upstream/downstream port configuration.

Summary

An object of an embodiment of the present invention is to provide a system which is configured to enable a vehicle's embedded USB Host system to connect to mobile devices through a USB Hub, regardless of whether the mobile devices are configured to act as USB Hosts or USB Devices, without the need to provide OTG or dual role controllers in the head unit and without the need to provide additional cabling in the vehicle. Preferably, no hardware changes are required to be made to the USB Host circuits in the HU.

Microchip Ex. 1004, p. 15
Microchip v. Aptiv
IPR2024-00558

An embodiment of the present invention provides a system which can be employed between a vehicle's embedded USB Host and at least one, but preferably multiple, consumer facing USB ports provided in the vehicle for connection to consumer devices. The system is configured to recognize and control whether the consumer device is required to be connected to each USB port as a USB Host or as a USB Device. Further, the system is able to dynamically switch the device connection between USB Device mode and USB Host mode when desired. In the case where the consumer device is acting as a USB Device, signals are routed normally through a USB Hub to the Head Unit. In the case where the consumer device is acting as a USB Host, signals between the consumer device and the vehicle's embedded USB Host are routed and processed through a USB Host to Host Bridge which is connected to the USB Hub, thereby rendering the consumer device compatible with the vehicle's embedded USB Host.

The present invention is capable of being implemented in several different embodiments. For example, an embodiment of the present invention comprises a USB Hub Module having a USB Hub, USB Bridge, and USB routing switches implemented as discrete devices. The USB Hub upstream port is configured to be connected to a vehicle's embedded USB Host (such as a USB Host in a Head Unit). The USB Hub Module also includes a switching device (such as USB analog multiplexing switches for example) that is configured to route each consumer port to either the Bridge or the Hub. The USB Bridge is configured to effectively control the switching device. The USB Bridge is configured, based on signals from the Head Unit, whether the consumer device which is connected to the USB port is acting as USB Host or USB Device. In the case where the consumer device is acting as USB Host, the USB Bridge controls the switching device to route the USB port to the Bridge. The Bridge processes the signals from the

Microchip Ex. 1004, p. 16
Microchip v. Aptiv
IPR2024-00558

consumer device and provides them to the USB Hub, thereby rendering the consumer device compatible with the vehicle's embedded USB Host. In the case where the consumer device is acting as USB Device, the USB Bridge controls the switching device such that the switching device provides the signals to the USB Hub, effectively bypassing the Bridge.

Still another embodiment of the present invention provides that the USB routing logic, USB Bridge, and USB Hub are integrated in a single combination USB Hub/USB Bridge Integrated Circuit (IC).

Microchip Ex. 1004, p. 17
Microchip v. Aptiv
IPR2024-00558

Still other embodiments are entirely possible, some of which are described and illustrated herein. For example, the concept can be extended to include additional embedded USB Device functions such as USB HID and USB Audio. Further it is also envisioned that all consumer facing USB ports of the Hub Module can emulate or otherwise support dual role USB capability provided that each downstream port has a Bridge to support USB Host mode for the connected device and a direct connection to the USB Hub to support USB Device mode. In all cases, compliance to USB protocols and architectures is preferably maintained.

Microchip Ex. 1004, p. 18
Microchip v. Aptiv
IPR2024-00558

Brief Description of the Drawings

The organization and manner of the structure and operation of the invention, together with further objects and advantages thereof, may best be understood by reference to the following description taken in connection with the accompanying drawings wherein like reference numerals identify like elements in which:

Figure 1 illustrates a system wherein a multiple port self-powered USB Hub functions to connect a single USB Host to a plurality of USB ports;

Figure 2 illustrates a system wherein a self-powered USB Hub provides not only a plurality of USB ports, but also a Secure Digital ("SD") card reader;

Figure 3 illustrates a vehicle infotainment system structure wherein multiple USB Hubs are connected together or tiered, such that USB Hubs feed other USB Hubs;

Figure 4 illustrates a system which is in accordance with an embodiment of the present invention, wherein a USB Hub, USB Bridge and a switching device are provided as discrete components;

Figure 5 illustrates a system which is in accordance with an alternative embodiment of the present invention, wherein USB routing/switching logic and a USB Bridge are integrated with a USB Hub in a combination USB Hub/USB Bridge Integrated Circuit (IC);

Figure 6 illustrates the different components of the combination USB Hub/Bridge IC shown in Figure 5;

Figure 7 illustrates one possible endpoint configuration of the USB Bridge shown in Figures 5 and 6; and

Figure 8 illustrates an example implementation of a Head Unit Software Architecture.

Microchip Ex. 1004, p. 19
Microchip v. Aptiv
IPR2024-00558

Description of Illustrated Embodiments

While this invention may be susceptible to embodiment in different forms, there are specific embodiments shown in the drawings and will be described herein in detail, with the understanding that the present disclosure is to be considered an exemplification of the principles of the invention, and is not intended to limit the invention to that as illustrated.

Figure 4 illustrates a system which is in accordance with an embodiment of the present invention. The system is configured to effectively render a vehicle's embedded USB Host compatible with consumer devices which are configured to also act as USB Host or USB Device. The system is in the form of a self-powered USB Hub Module having a USB, a USB Bridge, and a switching device implemented as discrete devices. The USB Hub is preferably provided in the form of an integrated circuit (IC), and is configured (via an upstream USB port) connected to a vehicle's embedded USB Host (such as a USB Host in a Head Unit) via vehicle internal wiring, such as, in one embodiment, via a single USB data cable between the Head Unit and USB Hub. The USB Hub also includes a plurality of downstream USB ports, at least one of which is connected to a USB Bridge (which also is preferably provided in the form of an integrated circuit (IC)). At least one downstream USB port of the USB Hub is connected to a switching device (such as USB analog multiplexing switches, for example). The switching device is configured to be connected to at least one USB port in the vehicle for connection to a consumer device. The USB Bridge is configured to effectively control the switching device although other control mechanisms are envisioned. The USB Hub Module is configured such that signals received from at least one USB port are received by the switching device, and the switching device routes the signals to the USB Bridge or the USB Hub. In the case where the consumer device is acting as USB Host, the USB Bridge processes the USB packets from the consumer port and provides

Microchip Ex. 1004, p. 21
Microchip v. Aptiv
IPR2024-00558

them to the USB Hub, thereby rendering the consumer device compatible with the vehicle's embedded USB Host. In the case where the consumer device is acting as USB Device, the USB Bridge controls the switching device such that the switching device provides the USB signaling directly to the USB Hub, bypassing the Bridge.

As shown in Figure 4, the system also includes Power Management structure, as well as some other conventional structure not specifically shown in Figure 4, but which would be readily assumed to be present by one having ordinary skill in the art.

In use, the Head Unit controls the switching device via the USB Bridge hardware or any other convenient means of control. The HU software application may choose to enable, for example, a phone on any one of the consumer USB ports, by requesting, commanding or otherwise knowing the phone is required to be in USB Host mode and commanding the routing of the specific USB port the phone is attached to the USB Bridge. Once routed to the USB Bridge, the phone will detect a USB Device is connected and the phone will begin the standard USB enumeration sequence. The detection and enumeration processes are defined by USB standards and not explained here in detail. However, for purposes of describing the operation of the invention, a general understanding is provided herein. The enumeration process follows a strict sequence of USB descriptor requests from the USB Host and USB descriptor responses from the USB Device that allow the Host to determine the capabilities and functions of the Device and configure the USB Device for operation. Once the complete set of device descriptors are known the USB Host will then load the appropriate USB driver(s) and applications to support in the functionality that the USB Device provides. In the scope of this invention it is envisioned that the responses to the descriptor requests made by the phone (USB Host) are either answered

Microchip Ex. 1004, p. 22
Microchip v. Aptiv
IPR2024-00558

locally by the Bridge or preferably, the requests are forwarded through the Bridge to the Head Unit where its device drivers process the request and return the response. The descriptor responses from the device driver are conveyed to the USB Bridge, which then, in turn, passes them to the phone. By passing descriptor request to the Head Unit drivers and returning the responses from the Head Unit drivers back to the consumer device, the Bridge appears as a transparent component in the USB system architecture. The system capabilities are controlled by the Head Unit and the system remains flexible without need for changes to the Bridge firmware or hardware when the system designer requires changes to the descriptor responses. Once the consumer device completes the enumeration process, the Head Unit's USB functional capabilities are known to the consumer device and the consumer device may enable use of those functions over USB communication. At this point, the consumer device or the Head Unit may begin activating any number of supported services such as data connections, streaming audio and streaming video to and from the vehicle via the USB Bridge.

Another embodiment of the present invention can be provided, wherein the bridge is configured to act as an OTG port thus negating the need for switches and/or routing logic. In this case there would exist one Bridge functional block for each downstream port. This embodiment would effectively be a more generalized case of the example illustrated in Figure 4. Figure 4 shows just one Bridge that any one of the consumer USB ports can be routed to. With just one bridge, only one consumer USB port can be connected to a USB host at a time. However, if each downstream port of the Hub has a dedicated Bridge, then multiple consumer ports can support connection to USB Host devices at the same time. Thus, any consumer port can be in either USB Host or USB Device mode at any time independently of the others.

Figure 5 illustrates an alternative embodiment wherein the switching device comprises USB routing logic, and both the USB routing logic and the USB Bridge are integrated with the USB Hub in a combination USB Hub/USB Bridge Integrated Circuit (IC). This configuration has cost and size advantages over building it with discrete components connected together on a printed circuit board.

Figure 6 illustrates the internal components of the USB Hub/USB Bridge Integrated Circuit (IC) shown in Figure 5. As shown, preferably the components of the USB Bridge include a bridge controller as well as endpoint buffers. While the exact configuration of endpoints is effectively up to the system designer to choose for a particular need, a specific example of one possible endpoint configuration is shown in Figure 7; however, many others are possible.

As shown in Figure 7, the endpoints of the Bridge may be designed to support multiple pipes of Bulk USB data connections between the Host A (Head Unit) and Host B (consumer device). In the Bridge, the IN endpoints of Device A are connected to the OUT endpoints of Device B and the OUT endpoints of Device A are connected to the IN endpoints of Device B. The design of the Bridge may be such that the data flow between the endpoints may be direct or buffered. For example, in the case of direct connection, once a USB packet is received from Host A on a Device A OUT endpoint, the internal logic of the Bridge moves to packet to the Device B IN endpoint if it is available. If Device B IN endpoint is full or otherwise not available then subsequent attempts of Host A to send more packets to Device A in the Bridge will be rejected until such time that the Device B IN endpoint is clear and the contents of the Device A OUT buffer is moved to it. Alternatively, there may exist a local buffer in the Bridge between the endpoints of Device A and B. For example, packets received on an OUT endpoint of Device

Microchip Ex. 1004, p. 24
Microchip v. Aptiv
IPR2024-00558

A are placed in a local memory device for temporary storage until Device B IN endpoint is ready for them. The OUT endpoints are thus capable of receiving multiple packets from the Host until the buffer is full. Likewise the IN endpoints may, at times, transmit multiple packets until the buffer is empty. Such buffers are not required, but are envisioned, to improve system throughput performance in certain circumstances where one of the USB Hosts is occasionally busy and not keeping up with USB transactions at the same rate as the other USB Host. Regardless of the buffer configuration, the Bridge hardware has IN and OUT endpoints on Device A mapped to OUT and IN endpoints respectively on Device B, thus forming a bidirectional bridge that passes USB traffic between two USB Hosts with bandwidth sufficient to support the application requirements of the system.

Also shown in Figure 7, Device A and Device B provide a bidirectional Control endpoint connected to their respective USB Hosts. Control endpoints are required per USB standard to support USB defined control messages between the Host and Device both during and after the enumeration sequence. Optionally, USB endpoints may also be utilized per USB standard to employ messages intended to control user defined custom device specific behavior, referred to as Vendor Specific messages. As can be seen in Figure 7, the Control endpoints are mapped to the Bridge Controller (BC). The BC logic may be implemented in hardware or preferably software. The BC provides the capability to send, receive and process USB standard Control endpoint messages as well as vendor specific messages essential to the control and operation of the Bridge. At system startup, the A Host requests and receives descriptors from the BC via the Control endpoint. Once complete, Host A then loads the Bridge Driver in its software stack and configures the custom Bridge hardware for operation. Host A can then control the functions of

the Bridge, such as USB switch routing control. The system is now ready to accept connection with USB Host mode consumer devices on the B Device of the Bridge. When such a connection is made, the BC will notify the Bridge Driver in Host A by sending a message on the control endpoint to Host A. Further, Host B will begin sending descriptor requests on the control endpoint to Device B in Bridge. The BC receives theses requests, encapsulates them with information that identifies them as descriptor requests from Host B and passes them to the Bridge Driver on Host using the control endpoint. Host A Bridge Driver receives these requests, identifies them as descriptor requests and passes the requests on to other software components in Host A system and waits for the descriptor responses. The descriptor responses are encapsulated by the Bridge driver to indicate they are descriptor responses that are to be forwarded to Host B. The response is then sent to the BC via the control endpoint. The BC receives them, identifies them as descriptor responses that should be forwarded to Device B and places them on the control endpoint for Device B. This process of receiving and forwarding messages back and forth between the two hosts continues until the enumeration process is complete with Host B. From that point on the two hosts may begin to use the IN and OUT endpoints to transfer application data and services over the bulk endpoints.

Figure 8 illustrates one possible configuration of the system architecture including software components in the Head Unit interfacing with the Bridge/Hub. There are multiple ways that the operating system and software architecture can be constructed to support the functions of the USB Bridge/Hub. In Figure 8, a typical Linux implementation is shown including the Bridge/Hub Module and the Head Unit. The system design utilizes standard Linux Kernel components and configurations and should be familiar to those skilled in the art. The Head Unit

Microchip Ex. 1004, p. 26
Microchip v. Aptiv
IPR2024-00558

USB Host Controller hardware is driven by the Host Controller Driver. The Host Controller Driver is connected to the USB Core. The USB Core connects the HCD with the standard USB Linux Device Drivers and the custom Bridge Driver. The Bridge Driver is configured to optionally connect directly to the User Space Application software or to the USB Gadget Driver depending on system architecture. The custom Bridge Driver plays a dual role of both controlling the functions of the Bridge hardware as well as providing a data path between the gadget device drivers and applications running on the Head Unit. The architecture illustrated is capable of handling both the operation and data paths associated with the Bridge and the Hub at the same time, thus allowing concurrent operation of consumer devices operating in USB Device mode with consumer devices operating in USB Host mode. In one embodiment, the Hub/Bridge supports simultaneous active USB data connections between the Head Unit and multiple consumer devices, at least one of which being in host mode while the others are in device mode. In another embodiment, the Hub/Bridge supports simultaneous active USB data connections between the Head Unit and some combination of embedded and consumer USB devices along with at least one device being in host mode. While it is understood that the software functions of the head unit are essential to building a complete system, the designs of which can vary significantly and this example is provided only as a means of demonstrating one way to utilize the functionality of the present invention.

Microchip Ex. 1004, p. 27
Microchip v. Aptiv
IPR2024-00558

What is claimed is:

1. A Universal Serial Bus (USB) hub module, comprising:

a first USB port configured to be connected to a USB host;

a second USB port configured to be connected to a consumer device;

a USB hub interconnected to the first USB port and the second USB port;

a USB bridge interconnected to the USB hub; and

a USB routing switch interconnected to the USB bridge, the USB hub, and the second USB port, wherein the USB routing switch is configured to connect the second USB port to the first USB port through the USB bridge, thereby supporting bidirectional initiation of communication between the USB host and the consumer device when the consumer device connected to the second USB port is in a USB host mode and wherein the USB routing switch is configured to connect the second USB port directly to the first USB port through the USB hub, thereby supporting only communication initiated by the USB Host when the consumer device connected to the second USB port is in a USB device mode.

2. The USB hub module according to claim 1, wherein the USB routing switch is configured to connect the second USB port to the first USB port through the USB bridge thereby supporting bidirectional initiation of communication between the USB host and the consumer device when the consumer device connected to the second USB port is in the USB host mode and wherein the USB routing switch is configured to simultaneously connect another second USB port directly to the first USB port through the USB hub, thereby supporting only communication initiated by the USB Host when another consumer device connected to the another second USB port is in the USB device mode.

3. The USB hub module according to claim 1, wherein the USB hub module is configured to recognize whether the consumer device connected to the second USB port is in the USB host mode or in the USB device mode and control the USB routing switch accordingly.

4. The USB hub module according to claim 1, wherein the USB hub module is configured to dynamically switch operation of the second USB port between supporting the consumer device in the USB device mode or the USB host mode.

5. The USB hub module according to claim 1, wherein the USB routing switch is configured to connect the consumer device to either the USB bridge or the USB hub based on whether the consumer device attached to the second USB port is configured to act as the USB host or a USB device.

6. The USB hub module according to claim 1, wherein the USB bridge is configured to control the USB routing switch.

7. An integrated circuit, comprising:

a USB hub configured to be interconnected to a first USB port connected to a USB host and a second USB port connected to a consumer device;

a USB bridge interconnected to the USB hub; and

a USB routing switch interconnected to the USB bridge, the USB hub, and the second USB port, wherein the USB routing switch is configured to connect the second USB port to the first USB port through the USB bridge thereby supporting bidirectional initiation of communication between the USB host and the consumer device when the consumer device connected to the second USB port is in a USB host mode and wherein the USB routing switch is

configured to connect the second USB port directly to the first USB port through the USB hub, thereby supporting only communication initiated by the USB Host when the consumer device connected to the second USB port is in a USB device mode.

8. The integrated circuit according to claim 7, wherein the USB routing switch is configured to connect the second USB port to the first USB port through the USB bridge thereby supporting bidirectional initiation of communication between the USB host and the consumer device when the consumer device connected to the second USB port is in the USB host mode and wherein the USB routing switch is configured to simultaneously connect another second USB port directly to the first USB port through the USB hub, thereby supporting only communication initiated by the USB Host when another consumer device connected to the another second USB port is in the USB device mode.

9. The integrated circuit according to claim 7, wherein the integrated circuit is configured to recognize whether the consumer device connected to the second USB port is in the USB host mode or in the USB device mode and control the USB routing switch accordingly.

10. The integrated circuit according to claim 7, wherein the integrated circuit is configured to dynamically switch operation of the second USB port between supporting the consumer device in the USB device mode or the USB host mode.

11. The integrated circuit according to claim 7, wherein the USB routing switch is configured to connect the consumer device to either the USB bridge or the USB hub based on whether the consumer device attached to the second USB port is configured to act as the USB host or a USB device.

12. The integrated circuit according to claim 7, wherein the USB bridge is configured to control the USB routing switch.

13. A method of operating a USB hub module having a USB hub configured to be interconnected to a first USB port connected to a USB host and a second USB port connected to a consumer device, a USB bridge interconnected to the USB hub, and a USB routing switch interconnected to the USB bridge, the USB hub, and the second USB port, said method comprising the steps of:

determining if the consumer device is operating in a USB host mode or in a USB device mode;

connecting the consumer device via the second USB port to the USB hub via the first USB port through the USB routing switch and the USB bridge when the consumer device is determined to be in the USB host mode; and

connecting the consumer device via the second USB port to the USB hub via the first USB port through the USB routing switch and the USB hub thereby bypassing the USB bridge when the consumer device is determined to be in the USB device mode.

14. The method according to claim 13, wherein the step of determining if the consumer device is operating in the USB host mode or in the USB device mode is performed by the USB routing switch.

15. A method of supporting data communication between a USB host and a USB enabled consumer device capable of operating in a USB host mode or a USB device mode, said method comprising the steps of:

providing a USB module having USB communication circuitry;

automatically configuring the USB communication circuitry to allow a consumer device to initiate communication with the USB host when the consumer device is operating in the USB host mode; and

automatically configuring the USB communication circuitry to allow only the USB host to initiate communication with the consumer device when the consumer device is operating in the USB device mode.

16. The method according to claim 15, wherein the USB communication circuitry includes a USB hub configured to be interconnected to a first USB port connected to the USB host and a second USB port connected to the consumer device, a USB bridge interconnected to the USB hub, and a USB routing switch interconnected to the USB bridge, the USB hub, and the second USB port, said method further comprising the steps of:

determining, via the USB routing switch, if the consumer device is operating in the USB host mode or in the USB device mode;

connecting the consumer device to the USB hub through the USB routing switch and the USB bridge when the USB routing switch determines the consumer device is in the USB host mode; and

connecting the consumer device to the USB hub through the USB routing switch and the USB hub thereby bypassing the USB bridge when the USB routing switch determines the consumer device is the USB device mode.

17. A process for providing efficient communications among USB components of a communication system of a type that accommodates multiple USB hosts and multiple USB devices, said process comprising the steps of:

providing a first input port for receiving a first USB signal from a first USB host;

providing a second input port for receiving a second USB signal;

routing second USB signals from a second USB host via a USB bridge to said first USB host, and

routing second USB signals from a USB device via a USB hub to said first USB host.

18. The process according to claim 17, wherein said second USB signals from the second USB host are not routed to the first USB host via the USB hub.

19. The process according to claim 17, wherein the second USB signals are routed via only one of the USB bridge or the USB hub.

20. The process according to claim 17, wherein the second USB signals from the second USB host are transmitted to the first USB host via the USB bridge and the USB hub.

21. A method, comprising the steps of:

providing a first USB port for communication with a USB host;

providing a second USB port for communicating with a consumer device;

providing a signal detection circuit for receiving signals via said second USB port;

determining whether the signals received via said second USB port emanating from the consumer device indicate that the consumer device is operating in a USB host mode and if so, routing said signals via a USB bridge to said first USB port;

determining whether the signals received via said second USB port emanating from the consumer device indicate that the consumer device is operating in a USB device mode and if so, routing said signals via a USB hub to said first USB port.

22. A USB communication management process for interconnecting sources of USB signals, said process comprising the steps of:

receiving first USB host signals from a first USB host;

receiving second USB signals from a second USB signal source;

determining whether the second USB signals emanate from a second USB host; and

routing the second USB signals emanating from the second USB host via a USB bridge to said first USB host, and

routing the second USB signals not determined to emanate from a USB host via a USB hub to said first USB host.

23. A USB communication management process for interconnecting sources of USB signals, said process comprising the steps of:

receiving a first USB host signal from a first USB host;

receiving a second USB signal from a second USB signal source;

determining whether the second USB signal emanates from a second USB host;

establishing a first communication path via a USB bridge between said first USB host and said second USB signal source if said second signal emanates from the second USB host; and

establishing a second communication path via a USB hub between said first USB host and said second USB signal source if said second USB signal is not determined to emanate from the second USB host.

24. The process according to claim 23, wherein the first communication path does not include a USB hub and wherein the second communication path does not include a USB bridge.

25. A Universal Serial Bus (USB) connectivity module, comprising:

a first USB port;

a second USB port;

a USB host to host bridge connected to said first USB port;

a USB routing switch connected to said first USB port, said second USB port and said USB host to host bridge, wherein said USB routing switch is configured to provide a communication link between said first USB port and said second USB port through said USB host to host bridge when a first consumer device connected to said second USB port is operating in a USB host mode and wherein said USB routing switch is configured to provide another communication link between said first USB port and said second USB port that bypasses said USB host to host bridge when the first consumer device connected to said second USB port is operating in a USB device mode.

26. The USB connectivity module according to claim 25, further comprising a third USB port, wherein said USB routing switch is configured to provide a first communication link between said first USB port and said second USB port through said USB host to host bridge when the first consumer device connected to said second USB port is operating in the USB host mode and

wherein said USB routing switch is configured to provide simultaneously provide a second communication link between said first USB port and said third USB port that bypasses said USB host to host bridge when a second consumer device connected to said third USB port is operating in the USB device mode.

27. The USB connectivity module according to claim 25, further comprising a third USB port, wherein said USB routing switch is further connected to the third USB port, wherein said USB routing switch is configured to provide a first communication link between said first USB port and said second USB port through said USB host to host bridge when the first consumer device connected to said second USB port is operating in the USB host mode, and wherein said USB routing switch is configured to provide a second communication link between said first USB port and said third USB port that bypasses said USB host to host bridge when a second consumer device connected to said third USB port is operating in the USB device mode without interrupting the first communication link between said first USB port and said second USB port.

28. A communication system, comprising:

a USB hub including a first USB port and a second USB port;

a central vehicle microcontroller connected to said first USB port;

a first consumer device connected to said second USB port;

a USB host to host bridge connected to said first USB port;

a USB routing switch providing a first communication path between said second USB port and said USB host to host bridge and a second communication path between said second USB port and said first USB port that bypasses said USB host to host bridge, wherein said USB routing switch is adapted to enable said first communication path when the first consumer device

is connected to said second USB port and is operating in a USB host mode and wherein said USB routing switch is adapted to enable said second communication path when the first consumer device is connected to said second USB port and is operating in a USB device mode.

29. The communication system according to claim 28, further comprising a second consumer device, wherein the USB hub includes a third USB port and wherein the USB routing switch is further adapted to enable a third communication path between said third USB port and said first USB port that bypasses said USB host to host bridge when the second consumer device is connected to said third USB port and is operating in the USB device mode.

30. The communication system according to claim 29, wherein said USB routing switch is configured to simultaneously provide the second communication path between said first USB port and said third USB port without interrupting the first communication path between said first USB port and said second USB port.

Abstract

A system which is configured to enable a vehicle's embedded USB Host system to connect to multiple mobile devices through a USB Hub, regardless of whether the mobile devices are configured to act as USB Hosts or USB Devices, without the need to add or provide OTG controllers in the system or additional vehicle wiring, or inhibiting the functionality of any consumer devices operating in USB Device mode connected to a vehicle system Hub while another consumer device connected to the same Hub operates in USB Host mode. Preferably, the system is configured to provide that no additional cabling is required, and no hardware changes are required to be made to the HU. The system can be employed between a vehicle's embedded USB Host, USB Hub and at least one consumer accessible USB port. In the case where the consumer device is acting as a USB Host, signals between the consumer device and the vehicle's embedded USB Host are processed through a bridge, thereby rendering the consumer device compatible with the vehicle's embedded USB Host.

Microchip Ex. 1004, p. 38
Microchip v. Aptiv
IPR2024-00558

Figure 1

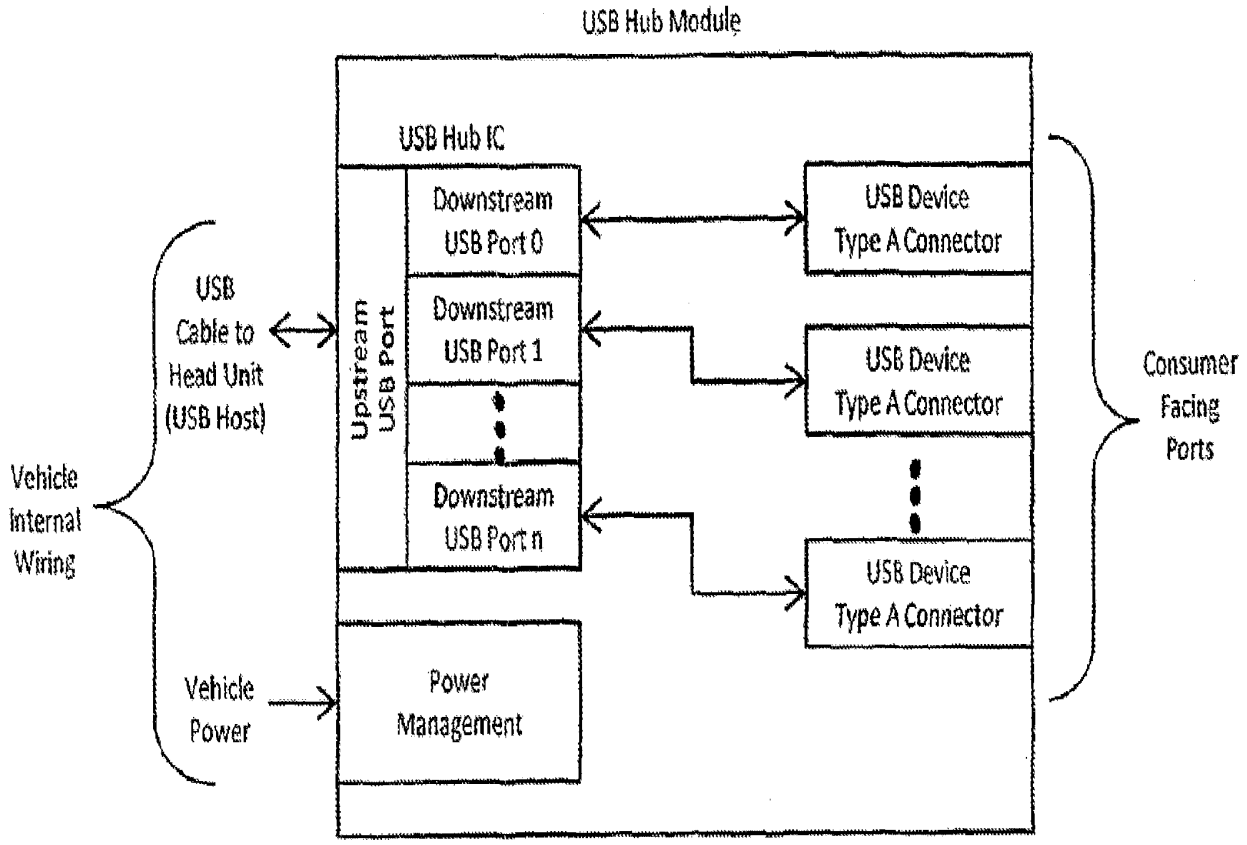
USB Hub Module
USB Hub IC
Upstream USB Port
Downstream USB Port 0
Downstream USB Port 1
Downstream USB Port n
USB Device Type A Connector
USB Device Type A Connector
USB Device Type A Connector
Consumer Facing Ports
USB Cable to Head Unit (USB Host)
Vehicle Internal Wiring
Vehicle Power
Power Management

Figure 2

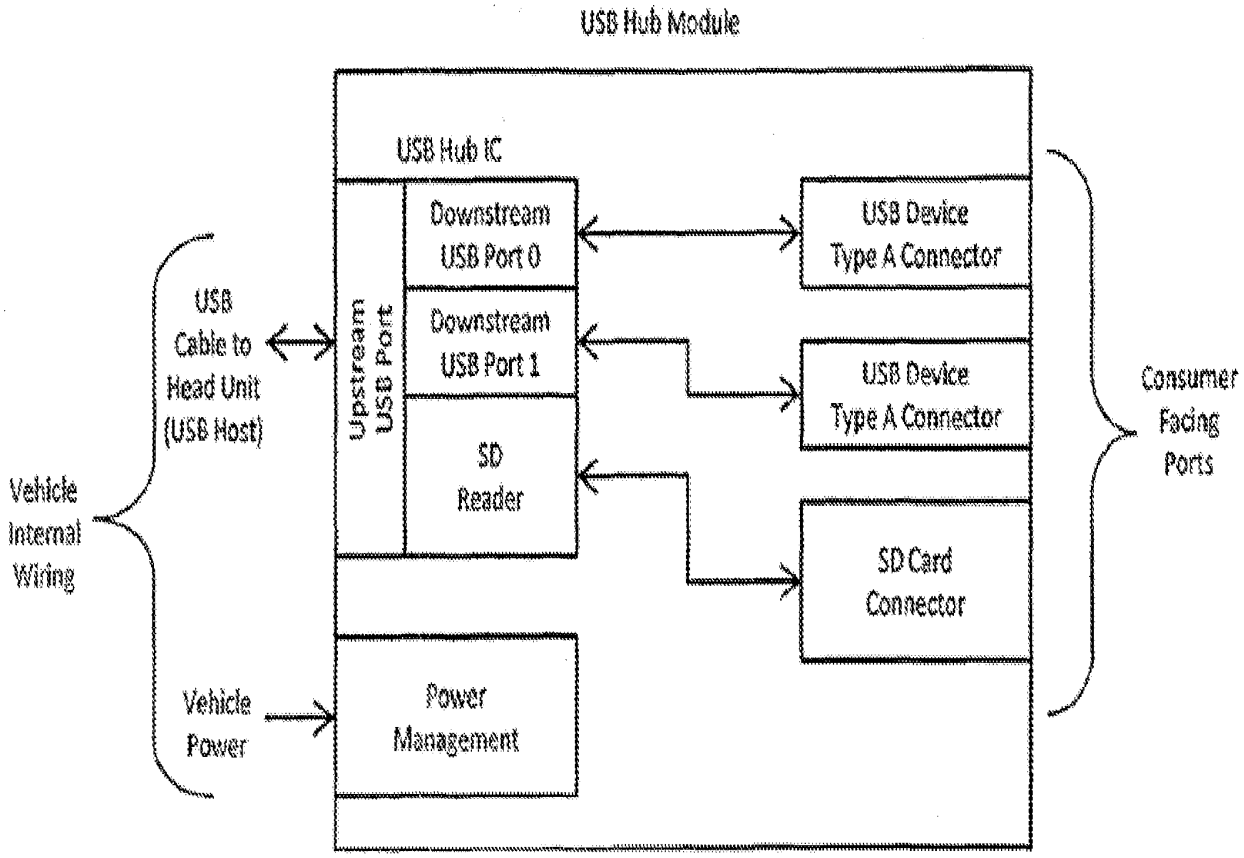
USB Hub Module
USB Hub IC
Downstream USB Port 0
Downstream USB Port 1
SD Reader
Upstream USB Port
USB Cable to Head Unit (USB Host)
Vehicle Internal Wiring
Vehicle Power
Power Management
USB Device Type A Connector
USB Device Type A Connector
SD Card Connector
Consumer Facing Ports

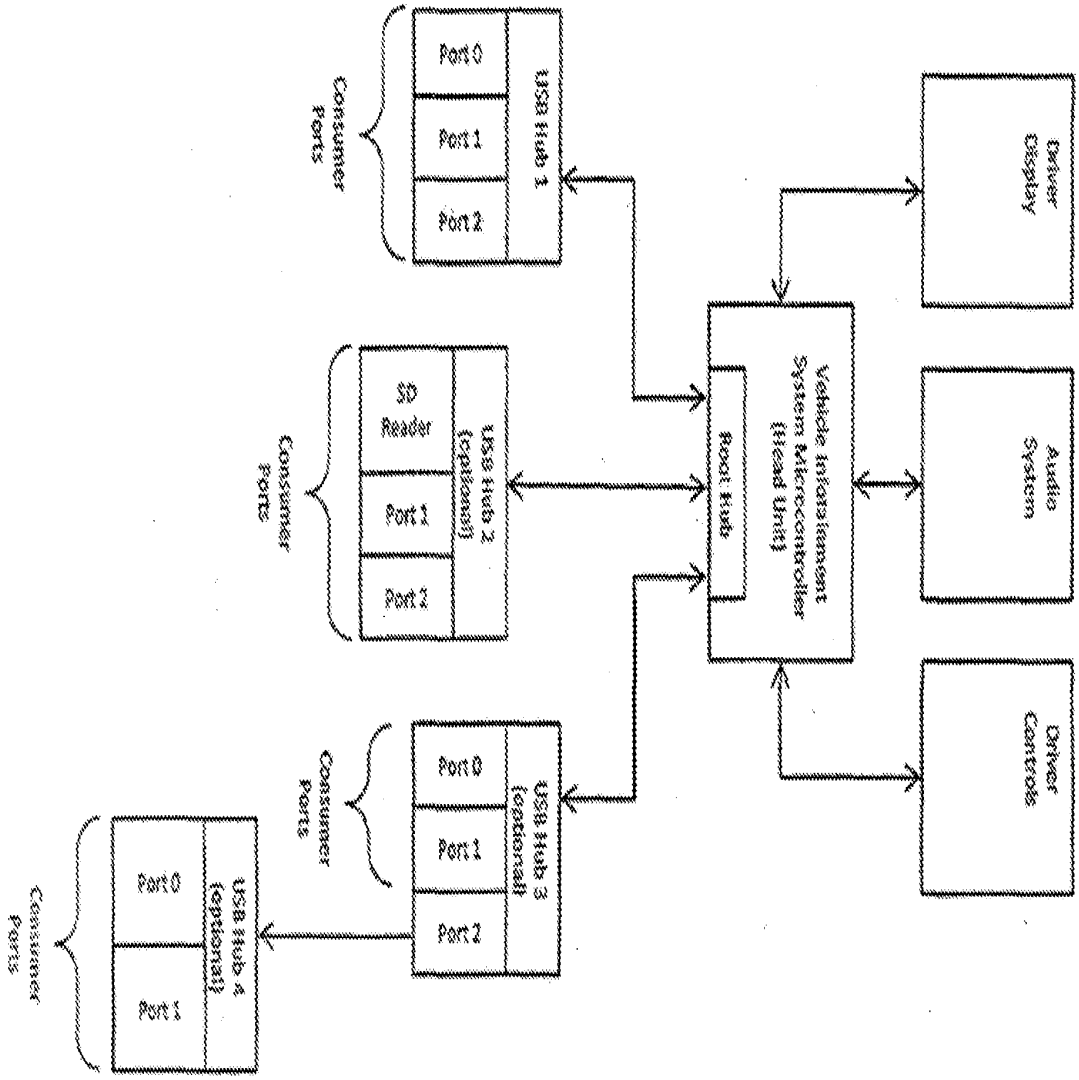
Driver Display
Audio System
Driver Controls
Vehicle Infotainment System Microcontroller Head Unit
Root Hub
USB Hub 1
Port 0
Port 1
Port 2
Consumer Ports
USB Hub 2 (optional)
SD Reader
Port 1
Port 2
Consumer Ports
USB Hub 3 (optional)
Port 0
Port 1
Port 2
Consumer Ports
USB Hub 4 (optional)
Port 0
Port 1
Consumer Ports

Figure 3

Figure 4

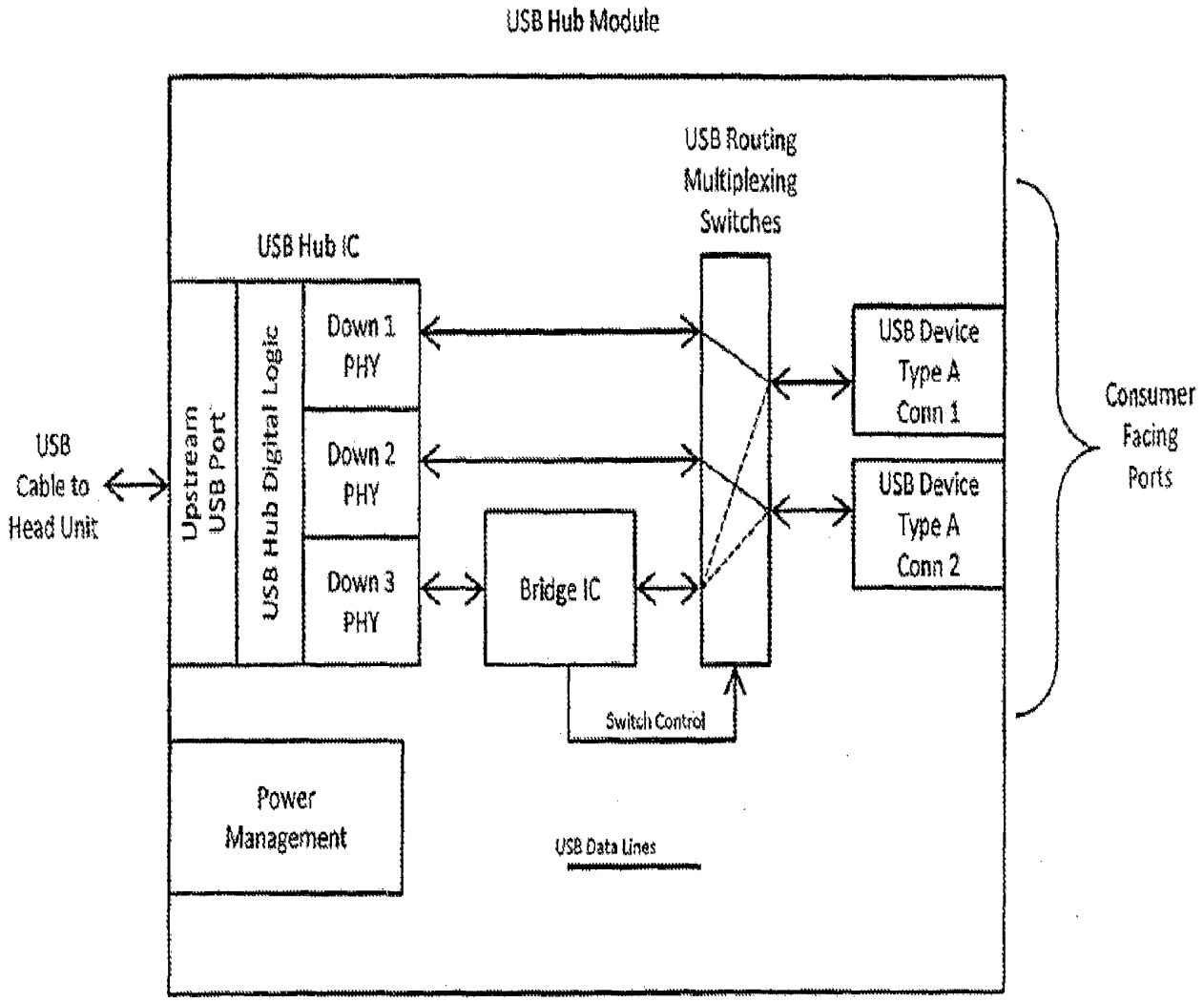
USB Hub Module
USB Routing Multiplexing Switches
USB Hub IC
Upstream USB Port
USB Hub Digital Logic
Down 1 PHY
Down 2 PHY
Down 3 PHY
Bridge IC
USB Device Type A Conn 1
USB Device Type A Conn 2
Consumer Facing Ports
USB Cable to Head Unit
Switch Control
Power Management
USB Data Lines

Figure 5

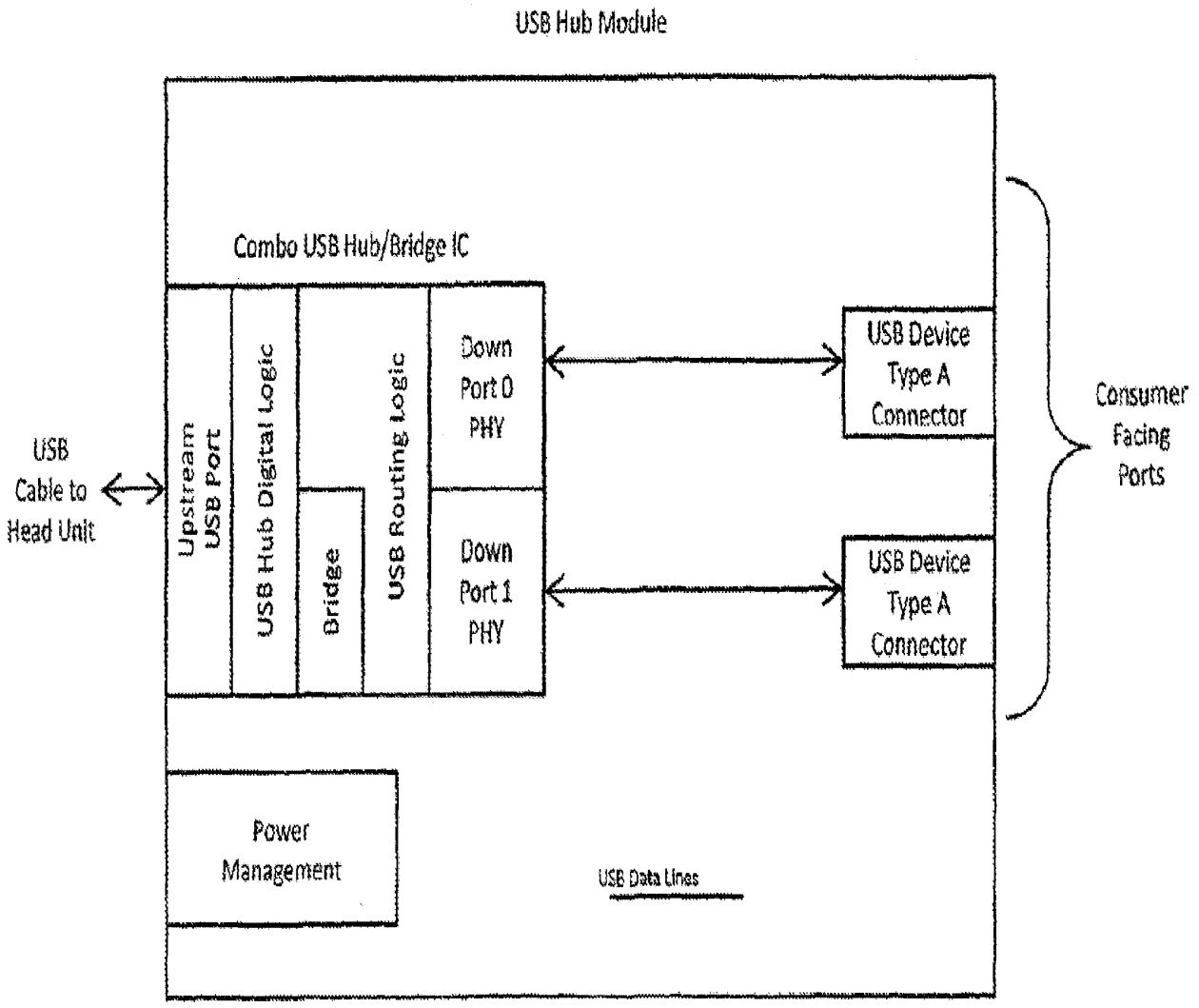
USB Hub Module
Combo USB Hub/Bridge IC
USB Cable to Head Unit
Upstream USB Port
USB Hub Digital Logic
Bridge
USB Routing Logic
Down Port 0 PHY
Down Port 1 PHY
USB Device Type A Connector
USB Device Type A Connector
Consumer Facing Ports
Power Management
USB Data Lines

Figure 6

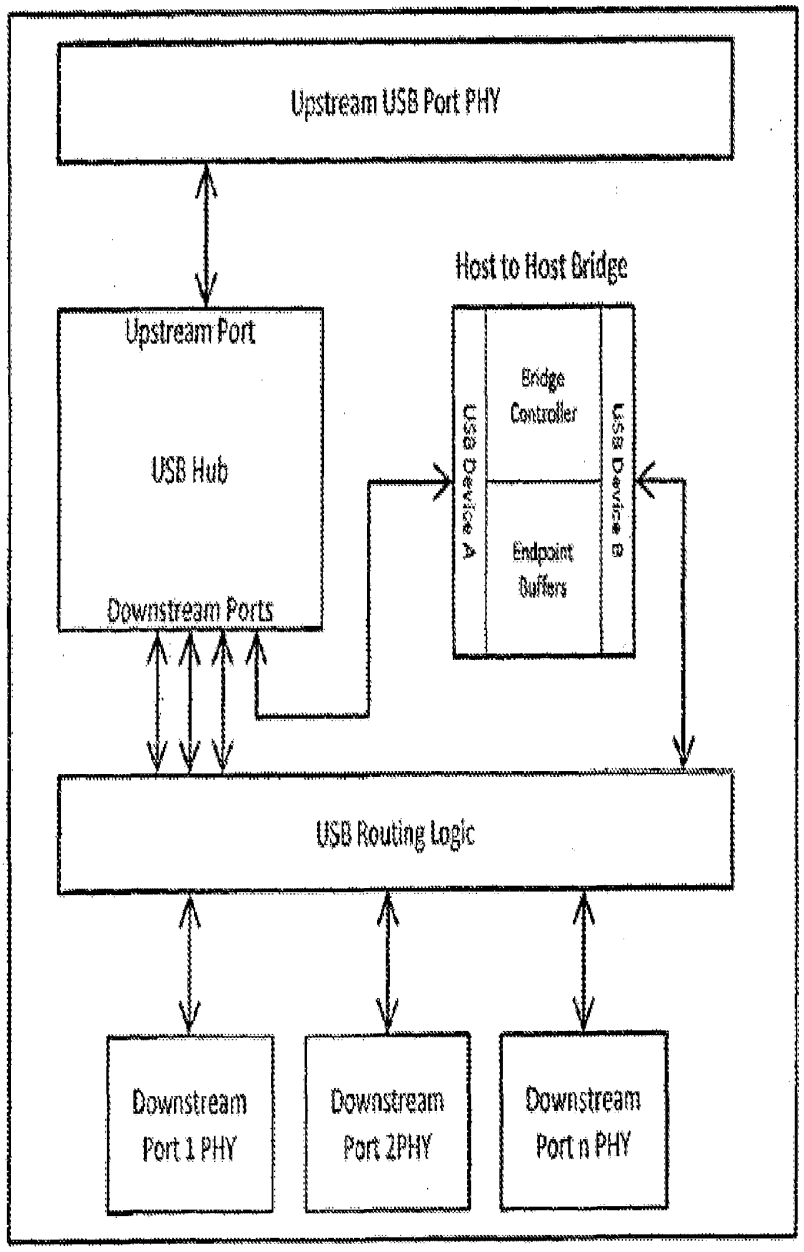
Upstream USB Port PHY
Host to Host Bridge
Upstream Port
USB Hub
Downstream Ports
Bridge Controller
Endpoint Buffers
USB Device A
USB Device B
USB Routing Logic
Downstream Port 1 PHY
Downstream Port 2PHY
Downstream Port n PHY

Figure 7

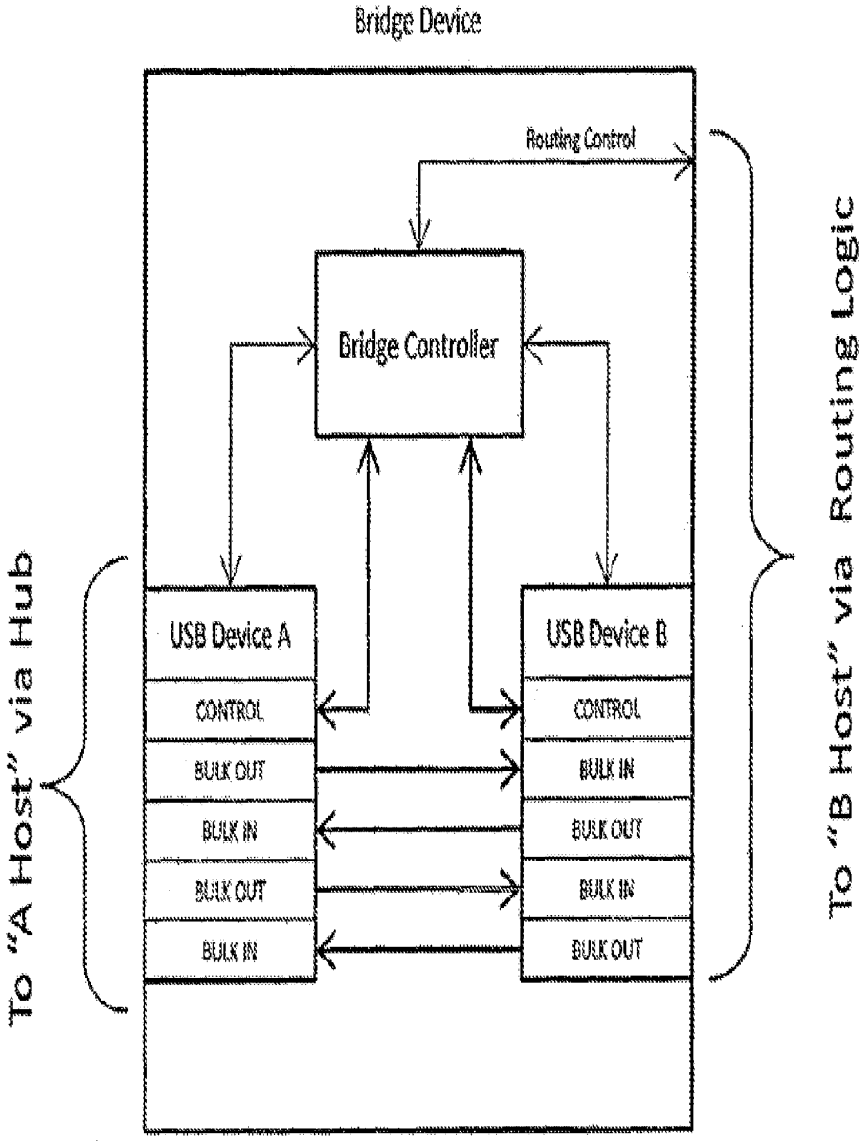
Bridge Device
To "A Host" via Hub
USB Device A
CONTROL
BULK OUT
BULK IN
BULK OUT
BULK IN
Bridge Controller
Routing Control
USB Device B
CONTROL
BULK IN
BULK OUT
BULK IN
BULK OUT
To "B Host" via Routing Logic

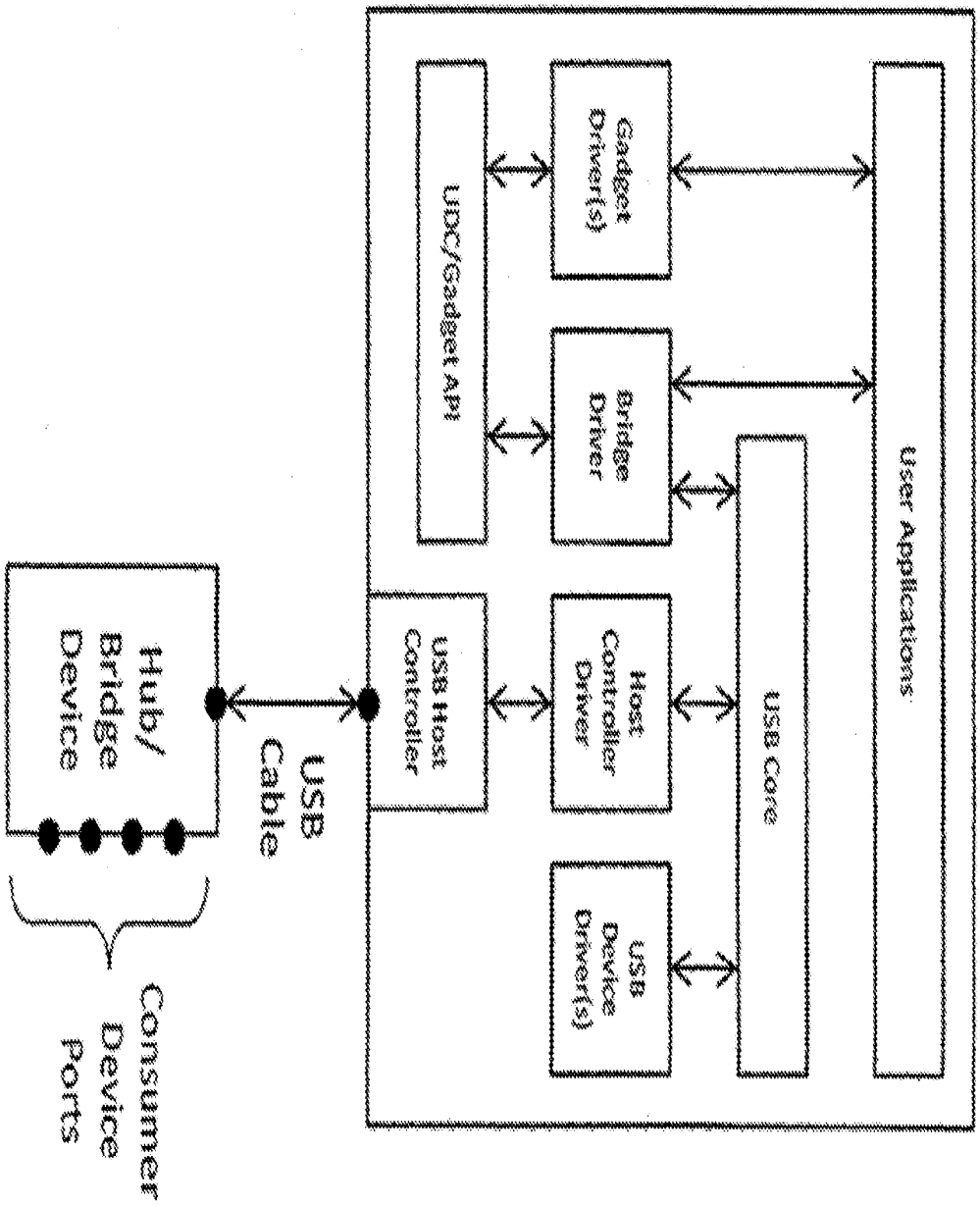
User Applications
Gadget Driver(s)
UDC/Gadget API
Bridge Driver
USB Core
USB Host Controller
Host Controller Driver
USB Device Driver(s)
Head Unit
USB Cable
Hub/ Bridge Device
Consumer Device Ports

Figure 8

Electronic Patent Application Fee Transmittal

Application Number:	
Filing Date:	
Title of Invention:	FLEXIBLE MOBILE DEVICE CONNECTIVITY TO AUTOMOTIVE SYSTEMS WITH UBS HUBS
First Named Inventor/Applicant Name:	ROBERT M. VOTO
Filer:	Lawrence Dean Hazelton/Kandace Powell
Attorney Docket Number:	DP-322037 CON

Filed as Large Entity

Filing Fees for Utility under 35 USC 111(a)

Description	Fee Code	Quantity	Amount	Sub-Total in USD($)
Basic Filing:				
UTILITY APPLICATION FILING	1011	1	280	280
UTILITY SEARCH FEE	1111	1	600	600
UTILITY EXAMINATION FEE	1311	1	720	720
Pages:				
Claims:				
CLAIMS IN EXCESS OF 20	1202	10	80	800
INDEPENDENT CLAIMS IN EXCESS OF 3	1201	6	420	2520
Miscellaneous-Filing:				

Description	Fee Code	Quantity	Amount	Sub-Total in USD($)
LATE FILING FEE FOR OATH OR DECLARATION	1051	1	140	140
Petition:				
Patent-Appeals-and-Interference:				
Post-Allowance-and-Post-Issuance:				
Extension-of-Time:				
Miscellaneous:				
			Total in USD ($)	**5060**

Electronic Acknowledgement Receipt

EFS ID:	26960220
Application Number:	15268728
International Application Number:	
Confirmation Number:	4506
Title of Invention:	FLEXIBLE MOBILE DEVICE CONNECTIVITY TO AUTOMOTIVE SYSTEMS WITH UBS HUBS
First Named Inventor/Applicant Name:	ROBERT M. VOTO
Customer Number:	22851
Filer:	Lawrence Dean Hazelton/Kandace Powell
Filer Authorized By:	Lawrence Dean Hazelton
Attorney Docket Number:	DP-322037 CON
Receipt Date:	19-SEP-2016
Filing Date:	
Time Stamp:	11:16:05
Application Type:	Utility under 35 USC 111(a)

Payment information:

Submitted with Payment	yes
Payment Type	DA
Payment was successfully received in RAM	$5060
RAM confirmation Number	091916INTEFSW00009318500831
Deposit Account	500831
Authorized User	Kandace Powell

The Director of the USPTO is hereby authorized to charge indicated fees and credit any overpayment as follows:

37 CFR 1.16 (National application filing, search, and examination fees)

37 CFR 1.17 (Patent application and reexamination processing fees)

37 CFR 1.19 (Document supply fees)

37 CFR 1.21 (Miscellaneous fees and charges)

File Listing:

Document Number	Document Description	File Name	File Size(Bytes)/ Message Digest	Multi Part /.zip	Pages (if appl.)
1	Application Data Sheet	DP323037CON_ADS_aia0014.pdf	1823136 97037a38474d0a639f1b1646304d51ec7e0ab24d	no	9
Warnings:					
Information:					
2		DP322037_CONT_appl.pdf	105563 7e7a0b7b4de7b613b8040a5ecb5ee0b1286ec0e1	yes	29

Multipart Description/PDF files in .zip description

Document Description	Start	End
Specification	1	18
Claims	19	28
Abstract	29	29

Warnings:					
Information:					
3	Drawings-only black and white line drawings	DP322037CON_drawings.pdf	1911748 8863b986004d229de1d267d4ae9e789725ba12db	no	8
Warnings:					
Information:					
4	Fee Worksheet (SB06)	fee-info.pdf	39940 d0398fb5e743ae8281d98ffc537873333522444b	no	2
Warnings:					
Information:					
		Total Files Size (in bytes):	3880387		

This Acknowledgement Receipt evidences receipt on the noted date by the USPTO of the indicated documents, characterized by the applicant, and including page counts, where applicable. It serves as evidence of receipt similar to a Post Card, as described in MPEP 503.

New Applications Under 35 U.S.C. 111
If a new application is being filed and the application includes the necessary components for a filing date (see 37 CFR 1.53(b)-(d) and MPEP 506), a Filing Receipt (37 CFR 1.54) will be issued in due course and the date shown on this Acknowledgement Receipt will establish the filing date of the application.

National Stage of an International Application under 35 U.S.C. 371
If a timely submission to enter the national stage of an international application is compliant with the conditions of 35 U.S.C. 371 and other applicable requirements a Form PCT/DO/EO/903 indicating acceptance of the application as a national stage submission under 35 U.S.C. 371 will be issued in addition to the Filing Receipt, in due course.

New International Application Filed with the USPTO as a Receiving Office
If a new international application is being filed and the international application includes the necessary components for an international filing date (see PCT Article 11 and MPEP 1810), a Notification of the International Application Number and of the International Filing Date (Form PCT/RO/105) will be issued in due course, subject to prescriptions concerning national security, and the date shown on this Acknowledgement Receipt will establish the international filing date of the application.

Document code: WFEE

United States Patent and Trademark Office
Sales Receipt for Accounting Date: 09/29/2016

ASAHLE SALE #00000002 Mailroom Dt: 09/19/2016 500831 15268728
01 FC : 1201 420.00 DA

UNITED STATES PATENT AND TRADEMARK OFFICE

UNITED STATES DEPARTMENT OF COMMERCE
United States Patent and Trademark Office
Address: COMMISSIONER FOR PATENTS
P.O. Box 1450
Alexandria, Virginia 22313-1450
www.uspto.gov

APPLICATION NUMBER	FILING OR 371(C) DATE	FIRST NAMED APPLICANT	ATTY. DOCKET NO./TITLE
15/268,728	09/19/2016	Robert M. Voto	DP-322037 CON

CONFIRMATION NO. 4506

22851
Delphi Technologies, Inc.
P.O. Box 5052
M/C 483-400-402
Troy, MI 48007-5052

INFORMAL NOTICE

OC000000086131206

Date Mailed: 09/30/2016

INFORMATIONAL NOTICE TO APPLICANT

Applicant is notified that the above-identified application contains the deficiencies noted below. No period for reply is set forth in this notice for correction of these deficiencies. However, if a deficiency relates to the inventor's oath or declaration, the applicant must file an oath or declaration in compliance with 37 CFR 1.63, or a substitute statement in compliance with 37 CFR 1.64, executed by or with respect to each actual inventor no later than the expiration of the time period set in the "Notice of Allowability" to avoid abandonment. See 37 CFR 1.53(f).

The item(s) indicated below are also required and should be submitted with any reply to this notice to avoid further processing delays.

- A properly executed inventor's oath or declaration has not been received for the following inventor(s):
  Robert M. Voto
  Shyambabu Yeda
  Craig Allan Petku

Questions about the contents of this notice and the requirements it sets forth should be directed to the Office of Data Management, Application Assistance Unit, at **(571) 272-4000** or **(571) 272-4200** or **1-888-786-0101**.

/hchin/

Microchip Ex. 1004, p. 53
Microchip v. Aptiv
IPR2024-00558

PATENT APPLICATION FEE DETERMINATION RECORD Substitute for Form PTO-875	Application or Docket Number 15/268,728

APPLICATION AS FILED - PART I

FOR	(Column 1) NUMBER FILED	(Column 2) NUMBER EXTRA	SMALL ENTITY RATE($)	SMALL ENTITY FEE($)	OR	OTHER THAN SMALL ENTITY RATE($)	OTHER THAN SMALL ENTITY FEE($)
BASIC FEE (37 CFR 1.16(a), (b), or (c))	N/A	N/A	N/A			N/A	280
SEARCH FEE (37 CFR 1.16(k), (i), or (m))	N/A	N/A	N/A			N/A	600
EXAMINATION FEE (37 CFR 1.16(o), (p), or (q))	N/A	N/A	N/A			N/A	720
TOTAL CLAIMS (37 CFR 1.16(i))	30 minus 20 =	* 10			OR	x 80 =	800
INDEPENDENT CLAIMS (37 CFR 1.16(h))	10 minus 3 =	* 7				x 420 =	2940
APPLICATION SIZE FEE (37 CFR 1.16(s))	If the specification and drawings exceed 100 sheets of paper, the application size fee due is $310 ($155 for small entity) for each additional 50 sheets or fraction thereof. See 35 U.S.C. 41(a)(1)(G) and 37 CFR 1.16(s).						0.00
MULTIPLE DEPENDENT CLAIM PRESENT (37 CFR 1.16(j))							0.00
* If the difference in column 1 is less than zero, enter "0" in column 2.			TOTAL			TOTAL	5340

APPLICATION AS AMENDED - PART II

		(Column 1) CLAIMS REMAINING AFTER AMENDMENT		(Column 2) HIGHEST NUMBER PREVIOUSLY PAID FOR	(Column 3) PRESENT EXTRA	SMALL ENTITY RATE($)	SMALL ENTITY ADDITIONAL FEE($)	OR	OTHER THAN SMALL ENTITY RATE($)	OTHER THAN SMALL ENTITY ADDITIONAL FEE($)
AMENDMENT A	Total (37 CFR 1.16(i))	*	Minus	**	=	x =		OR	x =	
AMENDMENT A	Independent (37 CFR 1.16(h))	*	Minus	***	=	x =		OR	x =	
AMENDMENT A	Application Size Fee (37 CFR 1.16(s))									
AMENDMENT A	FIRST PRESENTATION OF MULTIPLE DEPENDENT CLAIM (37 CFR 1.16(j))							OR		
						TOTAL ADD'L FEE		OR	TOTAL ADD'L FEE	

		(Column 1) CLAIMS REMAINING AFTER AMENDMENT		(Column 2) HIGHEST NUMBER PREVIOUSLY PAID FOR	(Column 3) PRESENT EXTRA	RATE($)	ADDITIONAL FEE($)	OR	RATE($)	ADDITIONAL FEE($)
AMENDMENT B	Total (37 CFR 1.16(i))	*	Minus	**	=	x =		OR	x =	
AMENDMENT B	Independent (37 CFR 1.16(h))	*	Minus	***	=	x =		OR	x =	
AMENDMENT B	Application Size Fee (37 CFR 1.16(s))									
AMENDMENT B	FIRST PRESENTATION OF MULTIPLE DEPENDENT CLAIM (37 CFR 1.16(j))							OR		
						TOTAL ADD'L FEE		OR	TOTAL ADD'L FEE	

* If the entry in column 1 is less than the entry in column 2, write "0" in column 3.
** If the "Highest Number Previously Paid For" IN THIS SPACE is less than 20, enter "20".
*** If the "Highest Number Previously Paid For" IN THIS SPACE is less than 3, enter "3".
The "Highest Number Previously Paid For" (Total or Independent) is the highest found in the appropriate box in column 1.

UNITED STATES PATENT AND TRADEMARK OFFICE

UNITED STATES DEPARTMENT OF COMMERCE
United States Patent and Trademark Office
Address: COMMISSIONER FOR PATENTS
P.O. Box 1450
Alexandria, Virginia 22313-1450
www.uspto.gov

APPLICATION NUMBER	FILING or 371(c) DATE	GRP ART UNIT	FIL FEE REC'D	ATTY.DOCKET.NO	TOT CLAIMS	IND CLAIMS
15/268,728	09/19/2016	2185	5480	DP-322037 CON	30	10

CONFIRMATION NO. 4506

FILING RECEIPT

22851
Delphi Technologies, Inc.
P.O. Box 5052
M/C 483-400-402
Troy, MI 48007-5052

OC000000086131205

Date Mailed: 09/30/2016

Receipt is acknowledged of this non-provisional patent application. The application will be taken up for examination in due course. Applicant will be notified as to the results of the examination. Any correspondence concerning the application must include the following identification information: the U.S. APPLICATION NUMBER, FILING DATE, NAME OF APPLICANT, and TITLE OF INVENTION. Fees transmitted by check or draft are subject to collection. Please verify the accuracy of the data presented on this receipt. **If an error is noted on this Filing Receipt, please submit a written request for a Filing Receipt Correction. Please provide a copy of this Filing Receipt with the changes noted thereon. If you received a "Notice to File Missing Parts" for this application, please submit any corrections to this Filing Receipt with your reply to the Notice. When the USPTO processes the reply to the Notice, the USPTO will generate another Filing Receipt incorporating the requested corrections**

Inventor(s)

Robert M. Voto, Clarkston, MI;
Shyambabu Yeda, Rochester Hills, MI;
Craig Allan Petku, Clarkston, MI;

Applicant(s)

DELPHI TECHNOLOGIES, INC., TROY, MI;

Power of Attorney: None

Domestic Priority data as claimed by applicant

This application is a CON of 14/487,947 09/16/2014 PAT 9460037
which claims benefit of 61/882,915 09/26/2013

Foreign Applications for which priority is claimed (You may be eligible to benefit from the **Patent Prosecution Highway** program at the USPTO. Please see http://www.uspto.gov for more information.) - None.
Foreign application information must be provided in an Application Data Sheet in order to constitute a claim to foreign priority. See 37 CFR 1.55 and 1.76.

Permission to Access Application via Priority Document Exchange: Yes

Permission to Access Search Results: Yes

Applicant may provide or rescind an authorization for access using Form PTO/SB/39 or Form PTO/SB/69 as appropriate.

If Required, Foreign Filing License Granted: 09/28/2016

Microchip Ex. 1004, p. 55
Microchip v. Aptiv
IPR2024-00558

The country code and number of your priority application, to be used for filing abroad under the Paris Convention, is **US 15/268,728**

Projected Publication Date: 01/05/2017

Non-Publication Request: No

Early Publication Request: No
Title

FLEXIBLE MOBILE DEVICE CONNECTIVITY TO AUTOMOTIVE SYSTEMS WITH UBS HUBS

Preliminary Class

710

Statement under 37 CFR 1.55 or 1.78 for AIA (First Inventor to File) Transition Applications: No

PROTECTING YOUR INVENTION OUTSIDE THE UNITED STATES

Since the rights granted by a U.S. patent extend only throughout the territory of the United States and have no effect in a foreign country, an inventor who wishes patent protection in another country must apply for a patent in a specific country or in regional patent offices. Applicants may wish to consider the filing of an international application under the Patent Cooperation Treaty (PCT). An international (PCT) application generally has the same effect as a regular national patent application in each PCT-member country. The PCT process **simplifies** the filing of patent applications on the same invention in member countries, but **does not result** in a grant of "an international patent" and does not eliminate the need of applicants to file additional documents and fees in countries where patent protection is desired.

Almost every country has its own patent law, and a person desiring a patent in a particular country must make an application for patent in that country in accordance with its particular laws. Since the laws of many countries differ in various respects from the patent law of the United States, applicants are advised to seek guidance from specific foreign countries to ensure that patent rights are not lost prematurely.

Applicants also are advised that in the case of inventions made in the United States, the Director of the USPTO must issue a license before applicants can apply for a patent in a foreign country. The filing of a U.S. patent application serves as a request for a foreign filing license. The application's filing receipt contains further information and guidance as to the status of applicant's license for foreign filing.

Applicants may wish to consult the USPTO booklet, "General Information Concerning Patents" (specifically, the section entitled "Treaties and Foreign Patents") for more information on timeframes and deadlines for filing foreign patent applications. The guide is available either by contacting the USPTO Contact Center at 800-786-9199, or it can be viewed on the USPTO website at http://www.uspto.gov/web/offices/pac/doc/general/index.html.

For information on preventing theft of your intellectual property (patents, trademarks and copyrights), you may wish to consult the U.S. Government website, http://www.stopfakes.gov. Part of a Department of Commerce initiative, this website includes self-help "toolkits" giving innovators guidance on how to protect intellectual property in specific countries such as China, Korea and Mexico. For questions regarding patent enforcement issues, applicants may call the U.S. Government hotline at 1-866-999-HALT (1-866-999-4258).

Microchip Ex. 1004, p. 56
Microchip v. Aptiv
IPR2024-00558

LICENSE FOR FOREIGN FILING UNDER

Title 35, United States Code, Section 184

Title 37, Code of Federal Regulations, 5.11 & 5.15

GRANTED

The applicant has been granted a license under 35 U.S.C. 184, if the phrase "IF REQUIRED, FOREIGN FILING LICENSE GRANTED" followed by a date appears on this form. Such licenses are issued in all applications where the conditions for issuance of a license have been met, regardless of whether or not a license may be required as set forth in 37 CFR 5.15. The scope and limitations of this license are set forth in 37 CFR 5.15(a) unless an earlier license has been issued under 37 CFR 5.15(b). The license is subject to revocation upon written notification. The date indicated is the effective date of the license, unless an earlier license of similar scope has been granted under 37 CFR 5.13 or 5.14.

This license is to be retained by the licensee and may be used at any time on or after the effective date thereof unless it is revoked. This license is automatically transferred to any related applications(s) filed under 37 CFR 1.53(d). This license is not retroactive.

The grant of a license does not in any way lessen the responsibility of a licensee for the security of the subject matter as imposed by any Government contract or the provisions of existing laws relating to espionage and the national security or the export of technical data. Licensees should apprise themselves of current regulations especially with respect to certain countries, of other agencies, particularly the Office of Defense Trade Controls, Department of State (with respect to Arms, Munitions and Implements of War (22 CFR 121-128)); the Bureau of Industry and Security, Department of Commerce (15 CFR parts 730-774); the Office of Foreign AssetsControl, Department of Treasury (31 CFR Parts 500+) and the Department of Energy.

NOT GRANTED

No license under 35 U.S.C. 184 has been granted at this time, if the phrase "IF REQUIRED, FOREIGN FILING LICENSE GRANTED" DOES NOT appear on this form. Applicant may still petition for a license under 37 CFR 5.12, if a license is desired before the expiration of 6 months from the filing date of the application. If 6 months has lapsed from the filing date of this application and the licensee has not received any indication of a secrecy order under 35 U.S.C. 181, the licensee may foreign file the application pursuant to 37 CFR 5.15(b).

SelectUSA

The United States represents the largest, most dynamic marketplace in the world and is an unparalleled location for business investment, innovation, and commercialization of new technologies. The U.S. offers tremendous resources and advantages for those who invest and manufacture goods here. Through SelectUSA, our nation works to promote and facilitate business investment. SelectUSA provides information assistance to the international investor community; serves as an ombudsman for existing and potential investors; advocates on behalf of U.S. cities, states, and regions competing for global investment; and counsels U.S. economic development organizations on investment attraction best practices. To learn more about why the United States is the best country in the world to develop technology, manufacture products, deliver services, and grow your business, visit http://www.SelectUSA.gov or call +1-202-482-6800.

PTO/SB/26 (08-08)
Approved for use through 09/30/2008. OMB 0651-0031
U.S. Patent and Trademark Office; U.S. DEPARTMENT OF COMMERCE
Under the Paperwork Reduction Act of 1995, no persons are required to respond to a collection of information unless it displays a valid OMB control number.

TERMINAL DISCLAIMER TO OBVIATE A DOUBLE PATENTING REJECTION OVER A "PRIOR" PATENT	Docket Number (Optional) DP-322037 CON

In re Application of: Robert M. Voto, et al.

Application No.: 15/268,728

Filed: 09-19-2016

For: FLEXIBLE MOBILE DEVICE CONNECTIVITY TO AUTOMOTIVE SYSTEMS WITH USB HUBS

The owner*, Delphi Technologies, Inc., of 100 percent interest in the instant application hereby disclaims, except as provided below, the terminal part of the statutory term of any patent granted on the instant application which would extend beyond the expiration date of the full statutory term **prior patent** No. 9,460,037 as the term of said prior patent is defined in 35 U.S.C. 154 and 173, and as the term of said **prior patent** is presently shortened by any terminal disclaimer. The owner hereby agrees that any patent so granted on the instant application shall be enforceable only for and during such period that it and the **prior patent** are commonly owned. This agreement runs with any patent granted on the instant application and is binding upon the grantee, its successors or assigns.

In making the above disclaimer, the owner does not disclaim the terminal part of the term of any patent granted on the instant application that would extend to the expiration date of the full statutory term as defined in 35 U.S.C. 154 and 173 of the **prior patent**, "as the term of said **prior patent** is presently shortened by any terminal disclaimer," in the event that said **prior patent** later:

expires for failure to pay a maintenance fee;
is held unenforceable;
is found invalid by a court of competent jurisdiction;
is statutorily disclaimed in whole or terminally disclaimed under 37 CFR 1.321;
has all claims canceled by a reexamination certificate;
is reissued; or
is in any manner terminated prior to the expiration of its full statutory term as presently shortened by any terminal disclaimer.

Check either box 1 or 2 below, if appropriate.

1. ☐ For submissions on behalf of a business/organization (e.g., corporation, partnership, university, government agency, etc.), the undersigned is empowered to act on behalf of the business/organization.

I hereby declare that all statements made herein of my own knowledge are true and that all statements made on information and belief are believed to be true; and further that these statements were made with the knowledge that willful false statements and the like so made are punishable by fine or imprisonment, or both, under Section 1001 of Title 18 of the United States Code and that such willful false statements may jeopardize the validity of the application or any patent issued thereon.

2. ☑ The undersigned is an attorney or agent of record. Reg. No. 69,783

/Robert J. Myers/ — Signature
10-13-2016 — Date

Robert J. Myers
Typed or printed name

248-813-2512
Telephone Number

☑ Terminal disclaimer fee under 37 CFR 1.20(d) included.

WARNING: Information on this form may become public. Credit card information should not be included on this form. Provide credit card information and authorization on PTO-2038.

*Statement under 37 CFR 3.73(b) is required if terminal disclaimer is signed by the assignee (owner).
Form PTO/SB/96 may be used for making this certification. See MPEP § 324.

This collection of information is required by 37 CFR 1.321. The information is required to obtain or retain a benefit by the public which is to file (and by the USPTO to process) an application. Confidentiality is governed by 35 U.S.C. 122 and 37 CFR 1.11 and 1.14. This collection is estimated to take 12 minutes to complete, including gathering, preparing, and submitting the completed application form to the USPTO. Time will vary depending upon the individual case. Any comments on the amount of time you require to complete this form and/or suggestions for reducing this burden, should be sent to the Chief Information Officer, U.S. Patent and Trademark Office, U.S. Department of Commerce, P.O. Box 1450, Alexandria, VA 22313-1450. DO NOT SEND FEES OR COMPLETED FORMS TO THIS ADDRESS. **SEND TO: Commissioner for Patents, P.O. Box 1450, Alexandria, VA 22313-1450.**

If you need assistance in completing the form, call 1-800-PTO-9199 and select option 2.

Privacy Act Statement

The **Privacy Act of 1974 (P.L. 93-579)** requires that you be given certain information in connection with your submission of the attached form related to a patent application or patent. Accordingly, pursuant to the requirements of the Act, please be advised that: (1) the general authority for the collection of this information is 35 U.S.C. 2(b)(2); (2) furnishing of the information solicited is voluntary; and (3) the principal purpose for which the information is used by the U.S. Patent and Trademark Office is to process and/or examine your submission related to a patent application or patent. If you do not furnish the requested information, the U.S. Patent and Trademark Office may not be able to process and/or examine your submission, which may result in termination of proceedings or abandonment of the application or expiration of the patent.

The information provided by you in this form will be subject to the following routine uses:

1. The information on this form will be treated confidentially to the extent allowed under the Freedom of Information Act (5 U.S.C. 552) and the Privacy Act (5 U.S.C 552a). Records from this system of records may be disclosed to the Department of Justice to determine whether disclosure of these records is required by the Freedom of Information Act.
2. A record from this system of records may be disclosed, as a routine use, in the course of presenting evidence to a court, magistrate, or administrative tribunal, including disclosures to opposing counsel in the course of settlement negotiations.
3. A record in this system of records may be disclosed, as a routine use, to a Member of Congress submitting a request involving an individual, to whom the record pertains, when the individual has requested assistance from the Member with respect to the subject matter of the record.
4. A record in this system of records may be disclosed, as a routine use, to a contractor of the Agency having need for the information in order to perform a contract. Recipients of information shall be required to comply with the requirements of the Privacy Act of 1974, as amended, pursuant to 5 U.S.C. 552a(m).
5. A record related to an International Application filed under the Patent Cooperation Treaty in this system of records may be disclosed, as a routine use, to the International Bureau of the World Intellectual Property Organization, pursuant to the Patent Cooperation Treaty.
6. A record in this system of records may be disclosed, as a routine use, to another federal agency for purposes of National Security review (35 U.S.C. 181) and for review pursuant to the Atomic Energy Act (42 U.S.C. 218(c)).
7. A record from this system of records may be disclosed, as a routine use, to the Administrator, General Services, or his/her designee, during an inspection of records conducted by GSA as part of that agency's responsibility to recommend improvements in records management practices and programs, under authority of 44 U.S.C. 2904 and 2906. Such disclosure shall be made in accordance with the GSA regulations governing inspection of records for this purpose, and any other relevant (*i.e.*, GSA or Commerce) directive. Such disclosure shall not be used to make determinations about individuals.
8. A record from this system of records may be disclosed, as a routine use, to the public after either publication of the application pursuant to 35 U.S.C. 122(b) or issuance of a patent pursuant to 35 U.S.C. 151. Further, a record may be disclosed, subject to the limitations of 37 CFR 1.14, as a routine use, to the public if the record was filed in an application which became abandoned or in which the proceedings were terminated and which application is referenced by either a published application, an application open to public inspection or an issued patent.
9. A record from this system of records may be disclosed, as a routine use, to a Federal, State, or local law enforcement agency, if the USPTO becomes aware of a violation or potential violation of law or regulation.

Electronic Patent Application Fee Transmittal

Application Number:	15268728
Filing Date:	19-Sep-2016
Title of Invention:	FLEXIBLE MOBILE DEVICE CONNECTIVITY TO AUTOMOTIVE SYSTEMS WITH UBS HUBS
First Named Inventor/Applicant Name:	Robert M. Voto
Filer:	Lawrence Dean Hazelton/Kandace Powell
Attorney Docket Number:	DP-322037 CON

Filed as Large Entity

Filing Fees for Utility under 35 USC 111(a)

Description	Fee Code	Quantity	Amount	Sub-Total in USD($)
Basic Filing:				
Pages:				
Claims:				
Miscellaneous-Filing:				
Petition:				
Patent-Appeals-and-Interference:				
Post-Allowance-and-Post-Issuance:				
STATUTORY OR TERMINAL DISCLAIMER	1814	1	160	160

Description	Fee Code	Quantity	Amount	Sub-Total in USD($)
Extension-of-Time:				
Miscellaneous:				
		Total in USD ($)		**160**

Electronic Acknowledgement Receipt

EFS ID:	27208109
Application Number:	15268728
International Application Number:	
Confirmation Number:	4506
Title of Invention:	FLEXIBLE MOBILE DEVICE CONNECTIVITY TO AUTOMOTIVE SYSTEMS WITH UBS HUBS
First Named Inventor/Applicant Name:	Robert M. Voto
Customer Number:	22851
Filer:	Lawrence Dean Hazelton/Kandace Powell
Filer Authorized By:	Lawrence Dean Hazelton
Attorney Docket Number:	DP-322037 CON
Receipt Date:	13-OCT-2016
Filing Date:	19-SEP-2016
Time Stamp:	16:19:25
Application Type:	Utility under 35 USC 111(a)

Payment information:

Submitted with Payment	yes
Payment Type	DA
Payment was successfully received in RAM	$160
RAM confirmation Number	101416INTEFSW00003302500831
Deposit Account	500831
Authorized User	Kandace Powell

The Director of the USPTO is hereby authorized to charge indicated fees and credit any overpayment as follows:

37 CFR 1.21 (Miscellaneous fees and charges)

File Listing:

Document Number	Document Description	File Name	File Size(Bytes)/ Message Digest	Multi Part /.zip	Pages (if appl.)
1	Terminal Disclaimer Filed	DP322037_CON_sb0026.pdf	221257 c32c5d02378b33530d9252c0da87528ee8e1b8d6	no	2
Warnings:					
Information:					
2	Fee Worksheet (SB06)	fee-info.pdf	30858 acd31a23350ba9c07b85893e15cd6290b9052c6c	no	2
Warnings:					
Information:					
		Total Files Size (in bytes):	252115		

This Acknowledgement Receipt evidences receipt on the noted date by the USPTO of the indicated documents, characterized by the applicant, and including page counts, where applicable. It serves as evidence of receipt similar to a Post Card, as described in MPEP 503.

New Applications Under 35 U.S.C. 111
If a new application is being filed and the application includes the necessary components for a filing date (see 37 CFR 1.53(b)-(d) and MPEP 506), a Filing Receipt (37 CFR 1.54) will be issued in due course and the date shown on this Acknowledgement Receipt will establish the filing date of the application.

National Stage of an International Application under 35 U.S.C. 371
If a timely submission to enter the national stage of an international application is compliant with the conditions of 35 U.S.C. 371 and other applicable requirements a Form PCT/DO/EO/903 indicating acceptance of the application as a national stage submission under 35 U.S.C. 371 will be issued in addition to the Filing Receipt, in due course.

New International Application Filed with the USPTO as a Receiving Office
If a new international application is being filed and the international application includes the necessary components for an international filing date (see PCT Article 11 and MPEP 1810), a Notification of the International Application Number and of the International Filing Date (Form PCT/RO/105) will be issued in due course, subject to prescriptions concerning national security, and the date shown on this Acknowledgement Receipt will establish the international filing date of the application.

Application Number	Application/Control No.	Applicant(s)/Patent under Reexamination	
	15/268,728	VOTO ET AL.	

Document Code - DISQ	Internal Document – DO NOT MAIL

TERMINAL DISCLAIMER	☐ APPROVED	☒ DISAPPROVED
Date Filed : 13 October, 2016	**This patent is subject to a Terminal Disclaimer**	

Approved/Disapproved by:

/CRYSTAL QUEEN/

Technology Center: PLRC

Telephone: _____

The person who signed the terminal disclaimer is not the applicant, patentee or an attorney or agent of record. 37 CFR 1.321(a) and (b). (See FP 14.26.08)

(Note: PoA can be given to a customer number, wherein all practitioners listed under the customer number have PoA. given to a list of practitioners by registration number, the list may not comprise more than 10 practitioners or a separate paper signed by a 37 CFR I.33(b) party must be in the record identifying which of the practitioners, up to 10, are recognized as having PoA. If the applicant is a juristic entity (e.g., corporation), a representative of the applicant cannot sign the TD unless it is established that the representative is a party authorized to act on behalf of the applicant.)

Also resubmit Td with this paper, NO FEE is required.

U.S. Patent and Trademark Office

PTO/SB/08a (01-10)
Approved for use through 07/31/2012. OMB 0651-0031
U.S. Patent and Trademark Office; U.S. DEPARTMENT OF COMMERCE
Under the Paperwork Reduction Act of 1995, no persons are required to respond to a collection of information unless it contains a valid OMB control number.

INFORMATION DISCLOSURE STATEMENT BY APPLICANT

(Not for submission under 37 CFR 1.99)

Application Number	15268728
Filing Date	2016-09-19
First Named Inventor	Robert M. Voto, et al.
Art Unit	2181
Examiner Name	Ernest Unelus
Attorney Docket Number	DP-322037 CON

U.S.PATENTS Remove

Examiner Initial*	Cite No	Patent Number	Kind Code[1]	Issue Date	Name of Patentee or Applicant of cited Document	Pages,Columns,Lines where Relevant Passages or Relevant Figures Appear
	1	8447890	B1	2013-05-21	LeTourneur et al.	
	2	8447598	B2	2013-05-21	Chutorash et al.	
	3	7627708	B2	2009-12-01	Bohm et al.	
	4	7523243	B2	2009-04-21	Bohm et al.	
	5	7478191	B2	2009-01-13	Wurzburg et al.	
	6	7280802	B2	2007-10-09	Grady	
	7	7130656	B2	2006-10-31	Okagaki et al.	
	8	6957287	B2	2005-10-18	Lou et al.	

INFORMATION DISCLOSURE STATEMENT BY APPLICANT (Not for submission under 37 CFR 1.99)		
	Application Number	15268728
	Filing Date	2016-09-19
	First Named Inventor	Robert M. Voto, et al.
	Art Unit	2181
	Examiner Name	Ernest Unelus
	Attorney Docket Number	DP-322037 CON

	9	6934793	B2	2005-08-23	Ying et al.	
	10	6732219	B1	2004-05-04	Broyles	
	11	6073188	A	2000-06-06	FLEMING SCOTT M	

If you wish to add additional U.S. Patent citation information please click the Add button. Add

U.S.PATENT APPLICATION PUBLICATIONS Remove

Examiner Initial*	Cite No	Publication Number	Kind Code[1]	Publication Date	Name of Patentee or Applicant of cited Document	Pages,Columns,Lines where Relevant Passages or Relevant Figures Appear
	1	20130106750	A1	2013-05-02	Kurosawa	
	2	20130053003	A1	2013-02-28	King, II	
	3	20120290859	A1	2012-11-15	Saladin et al.	
	4	20120191811	A1	2012-07-26	Ng et al.	
	5	20120134506	A1	2012-05-31	DeBiasio et al.	
	6	20110124300	A1	2011-05-26	Sinai	

INFORMATION DISCLOSURE STATEMENT BY APPLICANT (Not for submission under 37 CFR 1.99)		
	Application Number	15268728
	Filing Date	2016-09-19
	First Named Inventor	Robert M. Voto, et al.
	Art Unit	2181
	Examiner Name	Ernest Unelus
	Attorney Docket Number	DP-322037 CON

	7	20110054721	A1	2011-03-03	Goodrich et al.		
	8	20090117890	A1	2009-05-07	Jacobsen et al.		
	9	20080005262	A1	2008-01-03	Wurzburg et al.		
	10	20070156293	A1	2007-07-05	Kellzi et al.		
	11	20070086724	A1	2007-04-19	Grady et al.		
	12	20070067553	A1	2007-03-22	Chang		
	13	20060056401	A1	2006-03-16	Bohm et al.		
	14	20030167345	A1	2003-09-04	Knight et al.		

If you wish to add additional U.S. Published Application citation information please click the Add button. Add

FOREIGN PATENT DOCUMENTS Remove

Examiner Initial*	Cite No	Foreign Document Number[3]	Country Code[2] i	Kind Code[4]	Publication Date	Name of Patentee or Applicant of cited Document	Pages,Columns,Lines where Relevant Passages or Relevant Figures Appear	T[5]
	1	2003256351	JP	A	2003-09-12	FURUKAWA TADAO		

EFS Web 2.1.17

INFORMATION DISCLOSURE STATEMENT BY APPLICANT (Not for submission under 37 CFR 1.99)	Application Number	15268728
	Filing Date	2016-09-19
	First Named Inventor	Robert M. Voto, et al.
	Art Unit	2181
	Examiner Name	Ernest Unelus
	Attorney Docket Number	DP-322037 CON

	2	470887	TW	B	2002-01-01	JANG		

If you wish to add additional Foreign Patent Document citation information please click the Add button Add

NON-PATENT LITERATURE DOCUMENTS Remove

Examiner Initials*	Cite No	Include name of the author (in CAPITAL LETTERS), title of the article (when appropriate), title of the item (book, magazine, journal, serial, symposium, catalog, etc), date, pages(s), volume-issue number(s), publisher, city and/or country where published.	T[5]
	1	"FFI Rapport-A STUDY OF COMPUTER INTERFACES FOR SOLDIER SYSTEMS", Lars Erik Olsen & Joakin Flathagen, Norwegian Defence Research Establishment, October 10, 2005	
	2	"USB 2.0 Autoswitch User's Manual", Lindy Electronics Limited & Lindy-Elektronic GMBH, September 2002	
	3	"APC USB 2.0 Host Controller - Device Driver Download", http://www.liutilities.com/devicedriver/apcusb20hostcontroller/, July 2002	
	4	"Peripheral-Sharing Hardware Suits Education's Needs to a 'T'", Terian Tyre, T H E Journal (Technological Horizons In Education), October 1988	

If you wish to add additional non-patent literature document citation information please click the Add button Add

EXAMINER SIGNATURE

Examiner Signature		Date Considered	

*EXAMINER: Initial if reference considered, whether or not citation is in conformance with MPEP 609. Draw line through a citation if not in conformance and not considered. Include copy of this form with next communication to applicant.

[1] See Kind Codes of USPTO Patent Documents at www.USPTO.GOV or MPEP 901.04. [2] Enter office that issued the document, by the two-letter code (WIPO Standard ST.3). [3] For Japanese patent documents, the indication of the year of the reign of the Emperor must precede the serial number of the patent document. [4] Kind of document by the appropriate symbols as indicated on the document under WIPO Standard ST.16 if possible. [5] Applicant is to place a check mark here if English language translation is attached.

INFORMATION DISCLOSURE STATEMENT BY APPLICANT (Not for submission under 37 CFR 1.99)		
	Application Number	15268728
	Filing Date	2016-09-19
	First Named Inventor	Robert M. Voto, et al.
	Art Unit	2181
	Examiner Name	Ernest Unelus
	Attorney Docket Number	DP-322037 CON

CERTIFICATION STATEMENT

Please see 37 CFR 1.97 and 1.98 to make the appropriate selection(s):

That each item of information contained in the information disclosure statement was first cited in any communication from a foreign patent office in a counterpart foreign application not more than three months prior to the filing of the information disclosure statement. See 37 CFR 1.97(e)(1).

OR

☒ That no item of information contained in the information disclosure statement was cited in a communication from a foreign patent office in a counterpart foreign application, and, to the knowledge of the person signing the certification after making reasonable inquiry, no item of information contained in the information disclosure statement was known to any individual designated in 37 CFR 1.56(c) more than three months prior to the filing of the information disclosure statement. See 37 CFR 1.97(e)(2).

See attached certification statement.

The fee set forth in 37 CFR 1.17 (p) has been submitted herewith.

A certification statement is not submitted herewith.

SIGNATURE

A signature of the applicant or representative is required in accordance with CFR 1.33, 10.18. Please see CFR 1.4(d) for the form of the signature.

Signature	/Robert J. Myers/	Date (YYYY-MM-DD)	2016-10-24
Name/Print	Robert J. Myers	Registration Number	69,783

This collection of information is required by 37 CFR 1.97 and 1.98. The information is required to obtain or retain a benefit by the public which is to file (and by the USPTO to process) an application. Confidentiality is governed by 35 U.S.C. 122 and 37 CFR 1.14. This collection is estimated to take 1 hour to complete, including gathering, preparing and submitting the completed application form to the USPTO. Time will vary depending upon the individual case. Any comments on the amount of time you require to complete this form and/or suggestions for reducing this burden, should be sent to the Chief Information Officer, U.S. Patent and Trademark Office, U.S. Department of Commerce, P.O. Box 1450, Alexandria, VA 22313-1450. DO NOT SEND FEES OR COMPLETED FORMS TO THIS ADDRESS. **SEND TO: Commissioner for Patents, P.O. Box 1450, Alexandria, VA 22313-1450.**

Privacy Act Statement

The Privacy Act of 1974 (P.L. 93-579) requires that you be given certain information in connection with your submission of the attached form related to a patent application or patent. Accordingly, pursuant to the requirements of the Act, please be advised that: (1) the general authority for the collection of this information is 35 U.S.C. 2(b)(2); (2) furnishing of the information solicited is voluntary; and (3) the principal purpose for which the information is used by the U.S. Patent and Trademark Office is to process and/or examine your submission related to a patent application or patent. If you do not furnish the requested information, the U.S. Patent and Trademark Office may not be able to process and/or examine your submission, which may result in termination of proceedings or abandonment of the application or expiration of the patent.

The information provided by you in this form will be subject to the following routine uses:

1. The information on this form will be treated confidentially to the extent allowed under the Freedom of Information Act (5 U.S.C. 552) and the Privacy Act (5 U.S.C. 552a). Records from this system of records may be disclosed to the Department of Justice to determine whether the Freedom of Information Act requires disclosure of these record s.

2. A record from this system of records may be disclosed, as a routine use, in the course of presenting evidence to a court, magistrate, or administrative tribunal, including disclosures to opposing counsel in the course of settlement negotiations.

3. A record in this system of records may be disclosed, as a routine use, to a Member of Congress submitting a request involving an individual, to whom the record pertains, when the individual has requested assistance from the Member with respect to the subject matter of the record.

4. A record in this system of records may be disclosed, as a routine use, to a contractor of the Agency having need for the information in order to perform a contract. Recipients of information shall be required to comply with the requirements of the Privacy Act of 1974, as amended, pursuant to 5 U.S.C. 552a(m).

5. A record related to an International Application filed under the Patent Cooperation Treaty in this system of records may be disclosed, as a routine use, to the International Bureau of the World Intellectual Property Organization, pursuant to the Patent Cooperation Treaty.

6. A record in this system of records may be disclosed, as a routine use, to another federal agency for purposes of National Security review (35 U.S.C. 181) and for review pursuant to the Atomic Energy Act (42 U.S.C. 218(c)).

7. A record from this system of records may be disclosed, as a routine use, to the Administrator, General Services, or his/her designee, during an inspection of records conducted by GSA as part of that agency's responsibility to recommend improvements in records management practices and programs, under authority of 44 U.S.C. 2904 and 2906. Such disclosure shall be made in accordance with the GSA regulations governing inspection of records for this purpose, and any other relevant (i.e., GSA or Commerce) directive. Such disclosure shall not be used to make determinations about individuals.

8. A record from this system of records may be disclosed, as a routine use, to the public after either publication of the application pursuant to 35 U.S.C. 122(b) or issuance of a patent pursuant to 35 U.S.C. 151. Further, a record may be disclosed, subject to the limitations of 37 CFR 1.14, as a routine use, to the public if the record was filed in an application which became abandoned or in which the proceedings were terminated and which application is referenced by either a published application, an application open to public inspections or an issued patent.

9. A record from this system of records may be disclosed, as a routine use, to a Federal, State, or local law enforcement agency, if the USPTO becomes aware of a violation or potential violation of law or regulation.

Espacenet

Bibliographic data: JP2003256351 (A) — 2003-09-12

USB HUB

Inventor(s): FURUKAWA TADAO ± (FURUKAWA TADAO)

Applicant(s): YAMAHA CORP ± (YAMAHA CORP)

Classification: - **international:** ***G06F13/14;*** (IPC1-7): G06F13/14
- **cooperative:**

Application number: JP20020056792 20020304 Global Dossier

Priority number(s): JP20020056792 20020304

Abstract of JP2003256351 (A)

PROBLEM TO BE SOLVED: To provide an USB hub, in which a plurality of host computers is capable of jointly owning peripheral equipment and switching operations are needless. ;SOLUTION: The USB hub comprises; a plurality of connecting ports 2 capable of connecting with a plurality of host computers 21 to 24 that packet- transmit and receive data assigned addresses; a plurality of connecting ports 3 capable of connecting with a plurality of peripheral equipment 25 to 28 that packet-transmit and receive data assigned addresses; FIFO memories 11 and 17 temporarily storing packet data inputted from the ports 2 and 3; and a control circuit C establishing connection between the host computers 21 to 24 and peripheral equipment 25 to 28 and controlling transmission of data at the basis of address information of the peripheral equipment 25 to 28 added to the packet data stored in the FIFO memories 11 and 17. ;COPYRIGHT: (C)2003,JPO

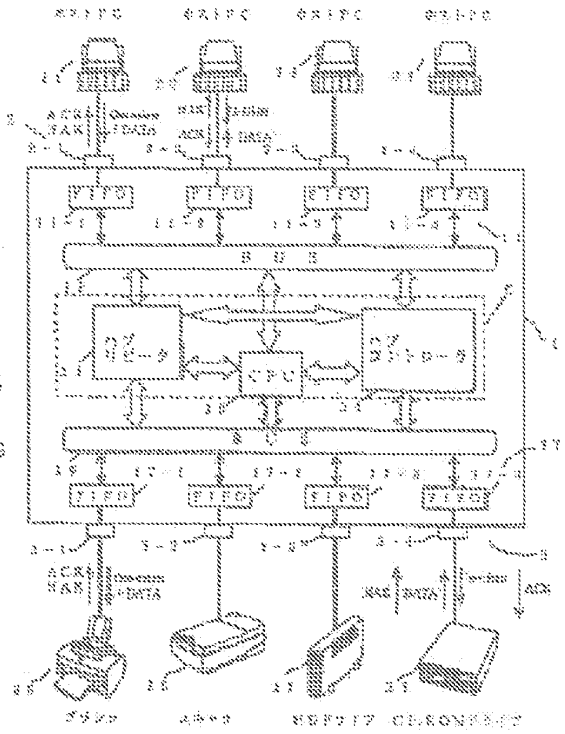

Microchip Ex. 1004, p. 71
Microchip v. Aptiv
IPR2024-00558

Microchip Ex. 1004, p. 72
Microchip v. Aptiv
IPR2024-00558

(19)日本国特許庁（ＪＰ）　(12) 公開特許公報（Ａ）　(11)特許出願公開番号
特開2003－256351
（P2003－256351A）
(43)公開日　平成15年9月12日(2003.9.12)

(51)Int.Cl.⁷	識別記号	ＦＩ	テーマコード（参考）
Ｇ０６Ｆ　13/14	３１０	Ｇ０６Ｆ　13/14	３１０Ｄ　５Ｂ０１４

審査請求　未請求　請求項の数４　ＯＬ　（全５頁）

(21)出願番号　特願2002－56792(P2002－56792)

(22)出願日　平成14年3月4日(2002.3.4)

(71)出願人　000004075
ヤマハ株式会社
静岡県浜松市中沢町10番１号

(72)発明者　古川　出維
静岡県浜松市中沢町10番１号　ヤマハ株式会社内

(74)代理人　100097820
弁理士　伊丹　勝

Ｆターム(参考)　5B014 HA11

(54)【発明の名称】　ＵＳＢハブ

(57)【要約】
【課題】　複数のホストコンピュータが周辺機器を共有することができ、かつ切替操作が不要なＵＳＢハブを提供する。
【解決手段】　アドレスを割り当てられデータをパケット送受信する複数台のホストコンピュータ２１－２４を接続可能とした複数個の接続ポート２と、アドレスを割り当てられデータを送受信する複数台の周辺機器２５－２８を接続可能とした複数個の接続ポート３と、これらのポート２，３から入力されるパケットデータを一時保持するＦＩＦＯメモリ１１，１７と、このＦＩＦＯメモリ１１，１７に保持されたパケットデータに付加された前記周辺機器２５－２８のアドレス情報に基づき、ホストコンピュータ２１－２４と前記周辺機器２５－２８との間の接続を確立しデータの転送を制御する制御回路Ｃとを備えた。

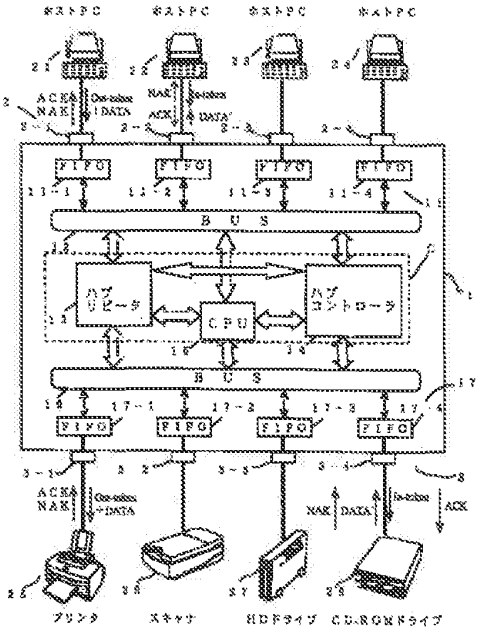

【特許請求の範囲】

【請求項1】 アドレスを割り当てられパケットデータを送受信する複数台のホストコンピュータを接続可能とした複数個の第1ポートと、
アドレスを割り当てられパケットデータを送受信する複数台の周辺機器を接続可能とした複数個の第2ポートと、
これらの第1ポート及び第2ポートから入力される前記パケットデータを一時保持するＦＩＦＯメモリと、
このＦＩＦＯメモリに保持されたパケットデータに付加された前記周辺機器のアドレス情報に基づき、前記ホストコンピュータと前記周辺機器との間の接続を確立しデータの転送を制御する制御回路とを備えたことを特徴とするＵＳＢハブ。

【請求項2】 前記ＦＩＦＯメモリは、前記ホストコンピュータごとに設けられた請求項1に記載のＵＳＢハブ。

【請求項3】 前記ＦＩＦＯメモリは、前記周辺機器ごとに設けられた請求項1又は2に記載のＵＳＢハブ。

【請求項4】 前記制御回路は、前記周辺機器の1つに対し2台以上の前記ホストコンピュータからデータの送信又は受信の要求があった場合に、前記ホストコンピュータのうちの1つと前記周辺機器の1つとの間の接続を確立させ、他のホストコンピュータからのデータは接続中の前記ホストコンピュータでのデータの送信又は受信が完了するまで前記ＦＩＦＯメモリに一時保持させるようにした請求項1乃至3のいずれか1項に記載のＵＳＢハブ。

【発明の詳細な説明】

【０００１】

【発明の属する技術分野】本発明は、ＵＳＢ（Universal Serial bus）インターフェースに対応した各種周辺機器を複数接続するためのＵＳＢハブに関し、さらに詳しくは、周辺機器だけでなく複数台のコンピュータを接続できるように構成したＵＳＢハブに関する。

【０００２】

【従来の技術】近年、コンピュータと周辺機器とを接続するインターフェースの方式として、ＵＳＢ規格のインターフェースが広く採用されている。コンピュータの電源を入れた状態で接続しても周辺機器の認識が可能であること（ホットプラグ）、階層的な接続をすることにより最大１２７個まで周辺機器を接続可能であるなど、コンピュータの利便性を向上させるのに役立っている。また、このようなＵＳＢ対応機器を複数同時に接続するための装置として、いわゆるＵＳＢハブも普及している。

【０００３】

【発明が解決しようとする課題】しかし、ＵＳＢインターフェースが複数台のホストコンピュータの存在を許さない規格となっていることから、ＵＳＢハブ自体も、単一のコンピュータのみが接続可能になっている。このため、複数のＰＣで１つの周辺機器を共有することは、ＵＳＢハブによっては困難であった。この点、特開2001-51939号公報に記載されたＵＳＢハブは、複数のホストコンピュータを選択的に周辺機器に接続する切替回路を備えており、これにより複数のホストコンピュータを同時に接続可能にしている。しかし、この構成では、複数のホストコンピュータが同時に周辺機器を利用することはできないし、周辺機器の使用を許可するホストコンピュータを切り換える際には逐一切替回路を動作させなければならない。また、切替を行う度に周辺機器のデバイスドライバをロード、アンロードしなければならないことから、切り替えに長い時間を要することになる。この発明は、上述した問題点に鑑みてなされたものであり複数のコンピュータが周辺機器を共有することができ、かつ切替操作が不要なＵＳＢハブを提供することを目的とする。

【０００４】

【課題を解決するための手段】上記目的達成のため、本発明に係るＵＳＢハブは、アドレスを割り当てられパケットデータを送受信する複数台のホストコンピュータを接続可能とした複数個の第1ポートと、アドレスを割り当てられパケットデータを送受信する複数台の周辺機器を接続可能とした複数個の第2ポートと、これらの第1ポート及び第2ポートから入力される前記パケットデータを一時保持するＦＩＦＯメモリと、このＦＩＦＯメモリに保持されたパケットデータに付加された前記周辺機器のアドレス情報に基づき、前記ホストコンピュータと前記周辺機器との間の接続を確立しデータの転送を制御する制御回路とを備えたことを特徴とする。

【０００５】この発明によれば、制御回路により、送信元のホストコンピュータ（又は周辺機器）と送信先の周辺機器（又はホストコンピュータ）との間の接続が前記アドレス情報に基づいて確立されるので、ＵＳＢインターフェースの下でも複数のホストコンピュータの存在が可能となる。また、接続の確立、解除するごとに逐一デバイスドライバをロード、アンロードする煩わしさが無い。

【０００６】この発明において、前記ＦＩＦＯメモリは、前記ホストコンピュータごとに設けるのが好適である。さらに、前記ＦＩＦＯメモリは、前記周辺機器ごとに設けるのが好適である。また、前記制御回路は、前記周辺機器の1つに対し2台以上の前記ホストコンピュータからデータの送信又は受信の要求があった場合に、前記ホストコンピュータのうちの1つと前記周辺機器の1つとの間の接続を確立させ、他のホストコンピュータからのデータは接続中の前記ホストコンピュータでのデータの送信又は受信が完了するまで前記ＦＩＦＯメモリに一時保持させるようにするとよい。このようにすることにより、複数のホストコンピュータからのデータが衝突することが回避される。

【0007】

【発明の実施の形態】次に、本発明の実施の形態を、図面に基づいて説明する。図1は、本発明の実施の形態に係るUSBハブ1と、このUSBハブ1に接続された複数のホストコンピュータ（以下ホストPCという）21−24及び周辺機器（図1では、プリンタ25、スキャナ26、ハードディスクドライブ27、CD−ROMドライブ28としている）を示している。

【0008】USBハブ1は、複数のホスト側接続ポート2（2−1，2−2，2−3，2−4）と、複数の周辺機器側接続ポート3（3−1，3−2，3−3，3−4）と、複数のホスト側FIFOメモリ11（11−1，11−2，11−3，11−4）と、バス12と、ハブリピータ13と、コントローラ14と、CPU15と、バス16と、複数の周辺機器側FIFOメモリ17（17−1，17−2，17−3，17−4）とを備えている。

【0009】ホスト側接続ポート2−1、2−2，2−3，2−4は、それぞれホストPC21，22，23，24をUSBハブ1に対しUSB接続するためのものである。また、周辺機器側接続ポート3−1、3−2，3−3，3−4は、それぞれ周辺機器としてのプリンタ21，スキャナ22，HDドライブ23、CD−ROMドライブ24をUSBハブ1に対しUSB接続するためのものである。ホスト側FIFOメモリ11−1，11−2，11−3，11−4は、それぞれホスト側接続ポート2−1、2−2，2−3，2−4に接続されており、それぞれホストPC21−24から周辺機器25−28側に送信されるパケットデータ、及び周辺機器25−28側からホストPC21−24側へ転送されるパケットデータを一時保持する役割を有する。

【0010】バス12は、データを伝送するための通信経路である。ハブリピータ13、ハブコントローラ14、CPU15とは、全体としてホストPC21−24と周辺機器25−28との間のデータ伝送を制御する制御回路Cとして機能する。制御回路Cは、ホストPC21−24の1つから周辺機器25−28の1つに対しデータ転送の要求があった場合、その周辺機器の使用状況をチェックし、その周辺機器が使用可能である場合に当該ホストPCと周辺機器との間の接続をセットアップし、データ転送終了後接続を解除するなどの機能を有する。接続のセットアップは、要求元のホストPCと要求先の周辺機器との間で1対1に行われるので、要求先が重複しない限り、複数のホストPCが同時に周辺機器にアクセスすることが可能となっている。

【0011】ハブリピータ13は、ホストPC21−24と周辺機器25−28との間の接続をセットアップ又は解除する機能を有する部分であり、また、ハブコントローラ14は、ホストPC21からUSBハブ1へのデータ伝送を行うためのメカニズムを提供する部分である。また、CPU15は、USB規格に基づいたパケットデータのトラフィック制御及びデータ管理を行う。バス16は、データを伝送するための通信経路である。周辺機器側FIFOメモリ17−1、17−2、17−3、17−4は、それぞれ周辺機器側接続ポート3−1，3−2，3−3，3−4に接続されており、制御回路Cから周辺機器25−28に出力されるべきパケットデータ、及び周辺機器25−28からホストPC21−24側に転送されるパケットデータを一時保持する役割を有する。

【0012】次に、本実施の形態に係るUSBハブ1の作用を、図面に基づいて説明する。以下では、ホストPC21−24から周辺機器25−28へデータを送信する場合と、逆に周辺機器25−28からホストPC21−24にデータ送信する場合とで分けて説明する。

【0013】まず、ホストPC21−24から周辺機器25−28へデータを送信する場合を、図2に示すフローチャートに基づいて説明する。この場合、最初にデータ送信を希望するホストPCが、送信を希望するパケットデータDATA 及びout-tokenパケットを出力する（S1）。ここでは、ホストPC21からプリンタ25へデータが出力されるものとする。パケットデータDATAのヘッダには、送信先のプリンタ25のアドレスが付加されている。out-tokenパケットは、ホストPCが周辺機器へデータ転送を指示する場合に出力されるコマンドパケットであり、そのヘッダには送信先の周辺機器（この場合プリンタ25）のアドレスが付加されている。

【0014】次に、S2において、このパケットデータDATA及びout-tokenパケットが、ホスト側FIFOメモリ11−1に一時記憶される。CPU14は、このパケットデータDATAに付加されたプリンタ25のアドレスデータを取得する。次に、S3において、CPU15は、取得されたアドレスデータに係る周辺機器即ちプリンタ25が使用可能か否かをチェックする。すなわち、他のホストPC22−24との間でデータを伝送している途中であるか否かをチェックする。プリンタ25が使用不可能であれば、CPU15はホストPC15にデータの送受信が正常に行われなかったときに発行されるハンドシェークパケットNAKを出力し（S4）、処理はS1に戻る。

【0015】プリンタ25が使用可能であれば、CPU15は、ハブリピータ13に命令してホストPC21とプリンタ25との間の接続をセットアップさせると共に、ハブコントローラ14に命令して、ホスト側FIFOメモリ11−1に保持されたパケットデータDATA及びout-tokenパケットを周辺機器側FIFOメモリ17−1へ向けて出力させる（S5）。

【0016】次に、CPU15は、周辺機器側FIFOメモリ17−1に保持されたout-tokenパケットをプリンタ25に向けて出力させる（S6）。プリンタ25が

このout-tokenパケットを受信しなかった場合（S7のN）には，CPU15はプリンタ25からNAK信号を受け取り、ホスト側FIFOメモリ11－1にこのNAK信号を送信し、S6に戻る（S7）。

【0017】プリンタ25がこのout-tokenパケットを受け取った場合（S7のY）、パケットデータDATAが周辺機器側FIFOメモリ17－1からプリンタ25に向けて転送される。転送が完了すると、ハンドシェークパケットACK（データの送受信が正常に行われたことを示す）がプリンタ25から周辺機器側FIFOメモリ11－1に出力される（S9）。ハンドシェークパケットACKは周辺機器側FIFOメモリ17－1に送られ、さらにホストPC21に受信され、これによりデータの送信手順が終了する（S10）。このように，あるホストPCが1つの周辺機器（例えばプリンタ25）にアクセスしている場合において、他のホストPCが当該周辺機器アクセスを要求した場合には、NAK信号の出力により先行のホストPCでの送受信が完了するまで他方のホストPCのデータはFIFOメモリ11により一時保持される。これにより、各ホストPCのデータの衝突が回避されている。

【0018】次に、周辺機器25－28からホストPC21－24にデータ送信する場合を図3に示すフローチャートに基づいて説明する。ここでは、CD－ROMドライブ25からホストPC22へデータが出力されるものとする。この場合、最初にデータ受信を希望するホストPC22が、in-tokenパケットを出力する（S11）。このin-tokenパケットは、周辺機器25－28側からホストPC21－24側へデータの転送を指示するためのコマンドパケットであり、そのヘッダには送信先の周辺機器（ここではCD－ROMドライブ28）のアドレスが付加されている。

【0019】次に、S12において、このin-tokenパケットが、ホスト側FIFOメモリ11－2に一時記憶される。CPU14は、このin-tokenパケットに付加されたCD－ROMドライブ28のアドレスデータを取得する。次に、S13において、CPU15は、取得されたアドレスデータに係る周辺機器即ちCD－ROMドライブ28が使用可能か否かをチェックする。すなわち、他のホストPC22－24との間でデータを伝送している途中であるか否かをチェックする。

【0020】CD－ROMドライブ25が使用不可能であれば（S13のN）、CPU15はホストPC22にデータの送受信が正常に行われなかったときに発行されるハンドシェークパケットNAKを出力し（S14）、処理はS11に戻る。

【0021】CD－ROMドライブ25が使用可能であれば（S13のY）、CPU15は、ハブリピータ13に命令してホストPC22とCD－ROMドライブ28との間の接続をセットアップさせると共に、ハブコントローラ14に命令して、ホスト側FIFOメモリ11－2に保持されたin-tokenパケットを周辺機器側FIFOメモリ17－4へ向けて出力させる（S15）。

【0022】次に、CPU15は、周辺機器側FIFOメモリ17－4に保持されたin-tokenパケットをCD－ROMドライブ28に向けて出力させる（S16）。CD－ROMドライブ28がこのin-tokenパケットを受信しなかった場合（S17のN）には、CPU15はCD－ROMドライブ28からNAK信号を受け取り、ホスト側FIFOメモリ11－2にこのNAK信号を送信し（S18）、S16に戻る。

【0023】CD－ROMドライブ28がこのin-tokenパケットを受け取った場合（S17のY）、CD－ROMドライブ28のデータDATA゛が、周辺機器側FIFOメモリ17－4、制御回路C及びホスト側FIFOメモリ17－2を経てホストPC22に向けて転送される（S19）。ホストPC22は、データ受信に成功したら、ハンドシェークパケットACKをCD－ROMドライブ28に向けて出力し（S20）、これによりデータの受信手順が終了する（S21）。

【0024】

【発明の効果】以上説明したように、本発明によれば、複数のホストコンピュータが周辺機器を共有することができ、かつ切替操作が不要となり、ネットワーク環境を簡単に提供することができる。

【図面の簡単な説明】

【図1】 本発明の実施の形態に係るUSBハブ1並びにこれに接続されたホストコンピュータ及び周辺機器を示す。

【図2】 図1に示すUSBハブの作用を示すフローチャートである。

【図3】 図1に示すUSBハブの作用を示すフローチャートである。

【符号の説明】

1　USBハブ
2、3　接続ポート
11、17　FIFOメモリ
12、16　バス
13　ハブリピータ
14　ハブコントローラ
15　CPU
C　制御回路
21－24　ホストPC
25　プリンタ（周辺機器）
26　スキャナ（周辺機器）
27　ハードディスクドライブ（周辺機器）
28　CD－ROMドライブ

【図1】

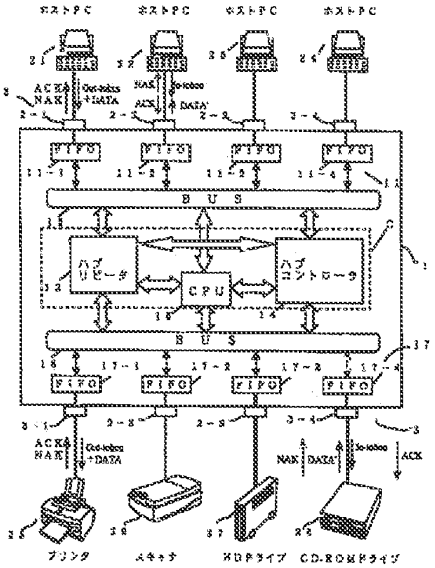
ホストPC
ホストPC
ホストPC
ホストPC
ACK&NAK
Out-token +DATA
NAK
In-token
ACK
DATA
FIFO
BUS
ハブリピータ
CPU
ハブコントローラ
BUS
FIFO
ACK&NAK
Out-token +DATA
NAK
DATA
In-token
ACK
プリンタ
スキャナ
HDPライブ
CD-ROMPライブ

【図2】

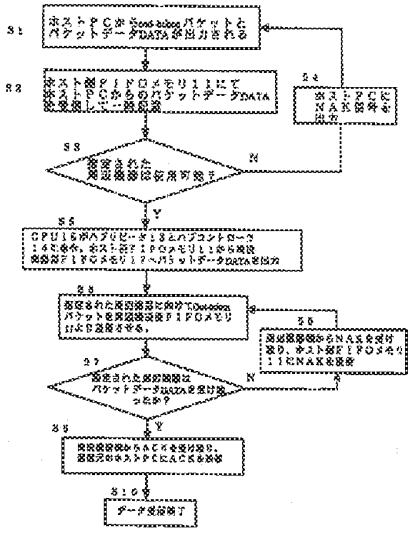
S1
S2
S3
S4
S5
S6
S7
S8
S9
S10
N
Y
データ受信終了

【図3】

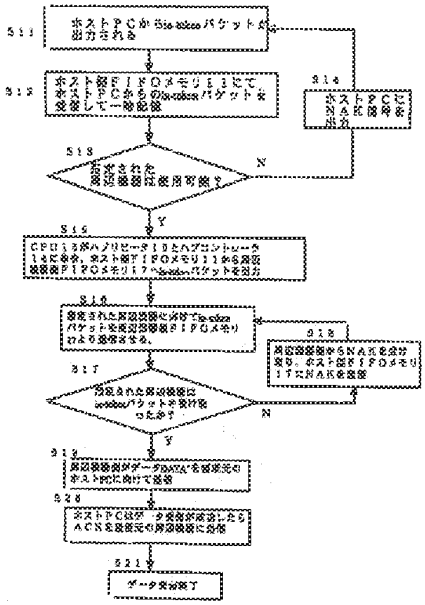
S11
S12
S13
S14
S15
S16
S17
S18
S19
S20
S21
N
Y
データ受信終了

Espacenet

Bibliographic data: TW470887 (B) — 2002-01-01

USB hub having multiple upstream ports and capable of switching between different hosts and computer system using the USB hub

Inventor(s): JANG LIANG-SHI [TW] ± (JANG, LIANG-SHI)

Applicant(s): WINBOND ELECTRONICS CORP [TW] ± (WINBOND ELECTRONICS CORP)

Classification: - **international:** *G06F13/36;* (IPC1-7): G06F13/36
- **cooperative:**

Application number: TW20000104360 20000310

Priority number (s): TW20000104360 20000310

Abstract of TW470887 (B)

There are provided an USB hub having multiple upstream ports and capable of switching between different hosts and a computer system using the USB hub. According to the requests of different computer hosts or the selection of manual switch, the usage right is switched to a computer host that requires using an USB hub, so that the computer host can control the data access of all the USB devices connected to the downstream port of the USB hub. The present invention can select and switch the computer host via the control of computer software, and achieve an automatic switching function. Furthermore, the software can determine whether the USB device currently in use is allowed to be switched, so as to avoid influencing its application function. Also, the function of the conventional data converter is integrated with the USB hub to effectively save the cost without having over-long cable and avoid switching noise. In addition, based on the number of the downstream ports of the USB hub, it is able to switch and use multiple USB devices.

Microchip Ex. 1004, p. 78
Microchip v. Aptiv
IPR2024-00558

公告本

申請日期	89.3.10
案號	89104360
類別	G06F 13/36

（以上各欄由本局填註）

A4
C4

470887

發明 新型 專利說明書

一、發明 新型 名稱	中文	具有多個上傳埠並可在不同主機間切換之 USB 集線器及使用該 USB 集線器之電腦系統
	英文	
二、發明 創作 人	姓名	張良熙
	國籍	中華民國
	住、居所	新竹市大學路 81 巷 3 弄 11-1 號 2 樓
三、申請人	姓名（名稱）	華邦電子股份有限公司
	國籍	中華民國
	住、居所（事務所）	新竹科學工業園區研新三路四號
	代表人姓名	焦佑鈞

裝 訂 線

經濟部中央標準局員工消費合作社印製

本紙張尺度適用中國國家標準（CNS）A4規格（210×297公釐）

公告本

申請日期	89.3.10
案號	89104360
類別	G06F 13/36

（以上各欄由本局填註）

A4
C4

470887

發明 新型 專利說明書

一、發明 新型 名稱	中文	具有多個上傳埠並可在不同主機間切換之 USB 集線器及使用該 USB 集線器之電腦系統
	英文	
二、發明 創作 人	姓名	張良熙
	國籍	中華民國
	住、居所	新竹市大學路 81 巷 3 弄 11-1 號 2 樓
三、申請人	姓名（名稱）	華邦電子股份有限公司
	國籍	中華民國
	住、居所（事務所）	新竹科學工業園區研新三路四號
	代表人姓名	焦佑鈞

裝 訂 線

經濟部中央標準局員工消費合作社印製

本紙張尺度適用中國國家標準（CNS）A4規格（210×297公釐）

五、發明說明（ / ）

本發明是有關於一種 USB 集線器，且特別是有關於一種具有多個上傳埠並可在不同主機間切換之 USB 集線器及使用該 USB 集線器之電腦系統，其可依據不同電腦主機之要求與手動切換之選擇，在適當時機將其使用權切換給需使用 USB 集線器之電腦主機，使電腦主機可控制所有接在 USB 集線器之下傳埠的 USB 裝置資料存取。

自從 IBM 公司發展出 PC XT 及 PC AT 的個人電腦之後，和 IBM PC 相容的個人電腦即被全世界普遍使用。在這期間，因爲半導體技術的進步，使個人電腦的功能越來越強，同時可用的設備也越來越多，例如：圖形化的作業系統的普及，滑鼠(Mouse)已是必備的設備，爲了將資料印出，印表機幾乎也是必備的，網際網路(Internet)的發達，在家中的使用者都需使用數據機(MODEM)來連接網路，而爲了避免電腦當機使工作成果付諸流水，會準備大容量的備份裝置定時備資料，或是想將圖形存入電腦，掃描器(Scanner)亦是普遍被使用的設備。

以上所提及的設備在個人電腦發展出來之後，陸續發展出來，直到目前，已是非常普遍，甚至是必備的設備。但是因爲每一項設備發展的目的不同，所處的環境亦不同，所以在設計時，依不同的考量而使用不同的介面。到了現在，在一部個人電腦若要使用前面所提的各項設備，電腦後面的連線將是非常可觀的，因爲幾乎每種設備都使用不同的介面，有些介面目前已是個人電腦的標準配備，如連接滑鼠的 RS232 串列介面，或是連接印表機的並列介

（請先閱讀背面之注意事項再填寫本頁）

訂

經濟部智慧財產局員工消費合作社印製

本紙張尺度適用中國國家標準（CNS）A4規格（210×297公釐）

Microchip Ex. 1004, p. 81
Microchip v. Aptiv
IPR2024-00558

五、發明說明（2）

面。但是有些介面則需另外安裝介面卡，例如連接大容量備份裝置大都使用 SCSI(Small Computer System Interface)介面，SCSI 介面即需另外安裝介面卡。又，有些設備更是使用專有的介面，如有些掃描器即是使用特殊的專有介面，必需安裝專屬的介面卡才可使用。因此在個人電腦中，必需提供許多插槽(Slot)以供安裝各種介面卡，而完成整個系統的連線之後，電腦後面的連線亦是十分可觀，並且凌亂無比。

由於上述的情況，乃發展出通用串列匯流排(Universal Serial Bus；以下簡稱 USB)介面的規格，其係爲一新興起之傳輸協定，USB 意圖將週邊至主機系統之傳輸方式統一化，使得未來週邊與主機之連結方式都透過 USB，以方便使用者連結各週邊與主機系統。

USB 希望各種設備都可使用統一的介面來連接，可簡化系統的安裝，並且電腦內部亦不需要預留太多的空間來安裝各種特殊的介面卡，另外 USB 介面亦有隨插即用(Plug & Play)的功能，即個人電腦可以自動偵測所連接的設備，並安裝相關的驅動程式(Driver)供使用者使用。此外，USB 介面的規格，具有線上即插即用(Hot Plug-in)的功能，可以在電腦運作當中，將設備連接上去，電腦主機皆可以自動偵測並安裝相關的程式，無需經過關機再重新開機的步驟，隨即可讓使用者使用新連上的週邊設備。同樣地，在週邊設備移除時，電腦主機亦可自動偵測並將相關的程式移除，以免使用者執行相關程式而產生錯誤。

（請先閱讀背面之注意事項再填寫本頁）

裝

訂

線

經濟部智慧財產局員工消費合作社印製

本紙張尺度適用中國國家標準（CNS）A4規格（210×297公釐）

Microchip Ex. 1004, p. 82
Microchip v. Aptiv
IPR2024-00558

五、發明說明（3）

一般來說，一個 USB 系統只能有一個主控器(master)，其他所有週邊裝置都是附屬器(slave)，通常個人電腦(PC)中之 USB 主機控制器(Host Controller)是唯一的主控器，並掌控所有資料之傳輸。主機控制器使用表徵(tokens)及指令(commands)，USB 定義爲 Requests 來控制主控器(PC)與附屬器(週邊裝置)間資料之接收與傳送。

USB 集線器(Hub)界於 USB 主機控制器與週邊裝置(USB 裝置)之間爲星形拓撲(star topology)中，用以擴展週邊之關鍵組件，所有的 USB 裝置(device)或節點(node)例如鍵盤、滑鼠、印表機...等都必須接在集線器之下傳埠(downstream port)或是被整合在集線器中。通常集線器擁有一上傳埠(upstream port)接至上一層集線器或主機控制器之根部節點集線器(root Hub)，另有一個以上(含一個)之下傳埠用以擴充 USB 之裝置節點。

集線器提供兩個主要的功能，一是中繼器(Repeater)：用以將主機下傳的資料廣播(broadcast)至所有致能埠上之 USB 裝置，然後將 USB 裝置上傳的資料重覆於上傳埠送至主機；另一是連接(connection)與斷絕(disconnection)之偵測：集線器必須對 USB 裝置之熱拔插做偵測，並報告給主機以達到主機熱即插即用(Hot Plug & Play)之功能。

請參照第 1 圖與第 2 圖，其分別繪示的是習知一種電腦系統的連接示意圖。

如第 1 圖與第 2 圖所示，所有的 USB 裝置 14a~14n 分別連接在對應之集線器 12a~12f 的下傳埠 16a~16n 或是被整

（請先閱讀背面之注意事項再填寫本頁）
裝
訂
線
經濟部智慧財產局員工消費合作社印製
本紙張尺度適用中國國家標準（CNS）A4規格（210×297公釐）

五、發明說明（4）

合在集線器(如第 2 圖之組合元件 20)中。集線器 12a~12f 分別擁有一上傳埠 18a~18f，並分別連接至上一層集線器或 USB 主機控制器 10 或電腦主機之根部節點集線器(root Hub)11。

由第 1 圖與第 2 圖可得知，由於個人電腦中之 USB 主機控制器控制所有 USB 裝置與個人電腦間資料之傳輸，所以對任一 USB 裝置而言，其只能被唯一之個人電腦使用，當有另一個人電腦欲透過 USB 匯流排使用此 USB 裝置時，必須重新將此 USB 裝置插入另一個人電腦之根部節點集線器或外部集線器之下傳埠，由此個人電腦取得 USB 裝置之控制權方能使用。

為了解決上述問題，目前市面上的解決方法為提供一轉換盒(switch box)，以手動方式來切換 USB 裝置接上被選擇之個人電腦，此種解決方案之電腦系統的連接示意圖如第 3 圖所示，包括個人電腦 21 與 22、轉換盒 24 及 USB 裝置 26。舉例來說，USB 裝置 26 目前是被個人電腦 21 所使用，假如個人電腦 22 欲使用 USB 裝置 26 時，必須以手動方式切換轉換盒 24 上之開關，使 USB 裝置 26 透過轉換盒 24 連接至個人電腦 22，此時個人電腦 22 即可使用 USB 裝置 26。然而，依照第 3 圖所示之架構及其切換方法，具有以下的缺點：

1. 人為切換不方便。

2. 無法判斷切換之適當時機，有可能影響正在使用此 USB 裝置之應用軟體功能。

（請先閱讀背面之注意事項再填寫本頁）
裝
訂
線
經濟部智慧財產局員工消費合作社印製
本紙張尺度適用中國國家標準（CNS）A4規格（210×297公釐）

Microchip Ex. 1004, p. 84
Microchip v. Aptiv
IPR2024-00558

五、發明說明（5）

3. 必須使用額外的轉換盒，成本高。

4. 延長電纜(cable)與使用過多的插座插頭，易產生雜訊。

5. 違反 USB 規格，有可能使 USB 裝置至集線器之電纜路徑超過 5 公尺。

6. 只能切換使用單一 USB 裝置。

請參照第 4 圖，其繪示的習知一種電腦系統的連接示意圖，包括個人電腦 31 與 32、資料轉換器(data switcher)34 及 USB 裝置 36a~36c。

第 4 圖與第 3 圖之最大不同點在於，透過第 4 圖之資料轉換器 34，可一次將連接於資料轉換器 34 上之多台 USB 裝置 36a~36c 切換給單一個人電腦使用。然而，必須注意的是，當資料轉換器 34 只連接這三台 USB 裝置 36a~36c 時，個人電腦 31 與 32 就分別必須使用三條 USB 電纜 37a~37c 與 38a~38c 來連接至資料轉換器 34。假如連接資料轉換器 34 之 USB 裝置的數量很多時，此時個人電腦 31、32 與資料轉換器 34 間之 USB 電纜的使用數量勢必非常可觀。

有鑒於此，本發明提出一種具有多個上傳埠並可在不同主機間切換之USB集線器，包括多數個上傳埠、多數個下傳埠、連結佈線器、轉換控制器與傳統USB集線器。這些上傳埠分別用以提供實際之連結至不同之電腦主機中，而所有下傳埠分別用以提供實際之連結至不同之USB裝置中。連結佈線器連接至所有上傳埠其中含有指令解譯器(74)

（請先閱讀背面之注意事項再填寫本頁）

裝

訂

線

經濟部智慧財產局員工消費合作社印製

本紙張尺度適用中國國家標準（CNS）A4規格（210×297公釐）

五、發明說明（6）

和多工器(72)，指令解譯器用以解碼來自個別電腦主機送來的指令，並回應相關的資料給電腦主機，同時送出解析後之結果訊號給轉換控制器(52)。轉換控制器(52)依據此控制訊號切換多工器(72)使其選擇指令所指定之上傳埠連接至USB集線器(54)之集線器中繼器(60)，其中被切換連接至集線器中繼器(60)之上傳埠係爲集線器埠，其他未連接者則爲裝置埠，而集線器埠所接之電腦主機擁有USB集線器之控制權，並控制所有接在USB集線器之下傳埠的USB裝置資料存取。轉換控制器連接所有上傳埠與連結佈線器，用以依據指令解析之結果訊號與手動開關來切換多工器，轉換控制器並於多工器切換完成後，送一開關控制訊號至所有上傳埠(46a~46n)，此控制訊號使上傳埠之電阻(64)先開路(open)再閉路(close)，而造成先斷絕再連接之機制，使連接上傳埠之主機分別對新的集線器埠和其他裝置埠重新認定，其中只有接在集線器埠的主機認定其下接有集線器並可使用此集線器下之裝置，其他接在裝置埠之主機認定其下接一單純之USB裝置用以傳送要求使用集線器之指令至連結佈線器(50)。

此外，本發明提出一種電腦系統，包括多數台電腦主機、多數台 USB 裝置與一 USB 集線器。上述 USB 集線器具有數個上傳埠與數個下傳埠，各上傳埠分別連接至各電腦主機中，以及各下傳埠分別連接至各 USB 裝置中，且 USB 集線器用以上傳由各 USB 裝置送來的資料及下傳由各電腦主機送來的資料。其中，在正常操作下，僅有一台電

（請先閱讀背面之注意事項再填寫本頁）
裝
訂
線
經濟部智慧財產局員工消費合作社印製
本紙張尺度適用中國國家標準（CNS）A4規格（210×297公釐）

Microchip Ex. 1004, p. 86
Microchip v. Aptiv
IPR2024-00558

五、發明說明（7）

腦主機具有 USB 集線器之使用權，代表此電腦主機可控制所有接在 USB 集線器之下傳埠的 USB 裝置資料存取。當有另一台電腦主機送出集線器要求指令給 USB 集線器，要求使用 USB 集線器及控制 USB 集線器下接之 USB 裝置時，USB 集線器會進入集線器仲裁狀態，並在適當時機後將其使用權轉交給此另一台電腦主機，此時該另一台電腦主機即具有 USB 集線器之使用權，並可控制所有接在 USB 集線器之下傳埠的 USB 裝置資料存取，達到不同電腦主機切換使用 USB 集線器之目的。另，USB 集線器可具有手動切換開關，經由控制此手動切換開關也可達到不同電腦主機切換使用 USB 集線器之目的。

本發明提出之 USB 集線器，由於具有多個上傳埠且本身具有切換與仲裁功能，故可依據不同電腦主機之要求與手動切換之選擇，在適當時機將其使用權切換給需使用 USB 集線器之電腦主機，使電腦主機可控制所有接在 USB 集線器之下傳埠的 USB 裝置資料存取，換言之，本發明依據 USB 集線器之下傳埠的數量多寡，可一次切換使用多個 USB 裝置。因此，本發明可經由電腦軟體控制選擇切換之電腦主機，並可達到自動切換的功能，且軟體可判斷目前正被使用之 USB 裝置是否允許切換，避免影響其應用功能。同時，將傳統資料轉換器之功能與 USB 集線器整合，可有效節省成本，並且無電纜過長之憂慮，可避免切換造成的雜訊。

爲讓本發明之上述和其他目的、特徵、和優點能更明

（請先閱讀背面之注意事項再填寫本頁）
訂
經濟部智慧財產局員工消費合作社印製
本紙張尺度適用中國國家標準（CNS）A4規格（210×297公釐）

Microchip Ex. 1004, p. 87
Microchip v. Aptiv
IPR2024-00558

五、發明說明（8）

顯易懂，下文特舉較佳實施例，並配合所附圖式，作詳細說明如下：

圖式之簡單說明：

第1圖繪示的是習知一種電腦系統的連接示意圖；

第2圖繪示的是習知另一種電腦系統的連接示意圖；

第3圖繪示的是習知再一種電腦系統的連接示意圖；

第4圖繪示的是習知又一種電腦系統的連接示意圖；

第5圖繪示的是依照本發明一較佳實施例的一種使用具有多個上傳埠之USB集線器，並可在不同電腦主機間切換之電腦系統的連接示意圖；

第6圖繪示的是依照第5圖之具有多上傳埠之USB集線器44的詳細結構圖；

第7圖繪示的是依照第6圖之傳統USB集線器54的詳細結構圖；

第8圖繪示的是依照第6圖之USB集線器44之每一上傳埠的詳細結構圖；

第9圖繪示的是依照第6圖之USB集線器44之連結佈線器的詳細結構圖；以及

第10圖繪示的是依照第6圖之USB集線器44之轉換控制器的詳細結構圖。

圖式之標號說明：

10、50a~50n：USB主機控制器

11：根部節點集線器

12a~12f：集線器

（請先閱讀背面之注意事項再填寫本頁）

訂

經濟部智慧財產局員工消費合作社印製

本紙張尺度適用中國國家標準（CNS）A4規格（210×297公釐）

Microchip Ex. 1004, p. 88
Microchip v. Aptiv
IPR2024-00558

五、發明說明（9）

14a~14n、26、36a~36c、42a~42n：USB 裝置

16a~16n：下傳埠

18a~18f：上傳埠

20：組合元件

21、22、31、32、40a~40n：個人電腦

24：轉換盒

34：資料轉換器

37a~37c、38a~38c：USB 電纜

44：本發明之具有多上傳埠之 USB 集線器

46a~46n：上傳埠

48a~48n：下傳埠

50：連結佈線器

52：轉換控制器

54：傳統 USB 集線器

60：集線器中繼器

62：集線器控制器

64：電阻

66：USB 收發器

68：USB 訊號端 DP

70：USB 訊號端 DM

72：多工器

74：指令解譯器

76：組合邏輯控制器

實施例

（請先閱讀背面之注意事項再填寫本頁）

裝

訂

線

經濟部智慧財產局員工消費合作社印製

本紙張尺度適用中國國家標準（CNS）A4規格（210×297公釐）

五、發明說明（10）

為了有效解決多台個人電腦切換使用多個 USB 裝置所面臨的問題，並且由於所有的 USB 裝置都必須經由集線器再往上接至使用此 USB 裝置之個人電腦(PC)，因此本發明乃利用此一特性，提供一個含有多個上傳埠之集線器，並透過內建於此集線器中之轉換控制器與個別 PC 中之控制軟體來選擇切換何者使用集線器，並控制和使用接上此集線器之 USB 裝置，其相關描述將於下詳細討論。

請參照第 5 圖，其繪示的是依照本發明一較佳實施例的一種使用具有多個上傳埠之 USB 集線器，並可在不同電腦主機間切換之電腦系統的連接示意圖。

本發明之電腦系統的組成要件主要包括多數台個人電腦 40a~40n、多數個 USB 裝置 42a~42n 與一具有多上傳埠之 USB 集線器 44，其中任一 USB 裝置 42a~42n 可以是鍵盤、滑鼠、印表機...等週邊裝置。USB 集線器 44 具有多數個上傳埠 46a~46n 與多數個下傳埠 48a~48n。每一個人電腦 40a~40n 分別透過其內部之 USB 主機控制器 50a~50n 連接至 USB 集線器 44 之一上傳埠 46a~46n，以及每一 USB 裝置 42a~42n 分別連接至 USB 集線器 44 之一下傳埠 48a~48n，如第 5 圖所示。

請參照第 6 圖，其繪示的是依照第 5 圖之具有多上傳埠之 USB 集線器 44 的詳細結構圖。

如先前所述，USB 集線器 44 具有多數個上傳埠 46a~46n 與多數個下傳埠 48a~48n，其中上傳埠 46a~46n 可被轉換控制器 52 控制其斷絕/連接之時序，USB 集線器 44

（請先閱讀背面之注意事項再填寫本頁）

訂

經濟部智慧財產局員工消費合作社印製

本紙張尺度適用中國國家標準（CNS）A4規格（210×297公釐）

Microchip Ex. 1004, p. 90
Microchip v. Aptiv
IPR2024-00558

五、發明說明（11）

係由一連結佈線器(link router)50、一轉換控制器 52 與一傳統 USB 集線器 54 所組成。連結佈線器 50 連接 USB 集線器 44 之上傳埠 46a~46n、轉換控制器 52 與傳統 USB 集線器 54。轉換控制器 52 控制上傳埠 46a~46n 之斷絕、連接時序，且其可經由外部之手動切換來改變其控制狀態。

請參照第 7 圖，其繪示的是依照第 6 圖之傳統 USB 集線器 54 的詳細結構圖。

USB 集線器 54 係由一集線器中繼器 60 與一集線器控制器 62 所組成，且兩者相互連接。集線器中繼器 60 之功能爲上傳由下傳埠 48a~48n 送來的資料，以及下傳由連結佈線器 50(第 6 圖)送來之表徵、指令及資料。集線器控制器 62 提供 USB 集線器 54 之狀態給電腦主機(例如第 5 圖之個人電腦 40a)，電腦主機依據 USB 集線器 54 之不同狀態控制下傳埠 48a~48n。

請參照第 8 圖，其繪示的是依照第 6 圖之 USB 集線器 44 之每一上傳埠 46a~46n 的詳細結構圖。

在第 8 圖中，以上傳埠 46a 爲例來說明。USB 集線器 44 之上傳埠 46a 包括一電阻 64、一 USB 收發器 66、訊號端 DP 68 與訊號端 DM 70。電阻 64 之兩端分別耦接至一電壓源 VDD 與訊號端 DP 68，且電阻 64 接收來自轉換控制器 52 之一 ON/OFF 控制信號，並依據此 ON/OFF 控制信號來決定上傳埠 46a 之連接狀態，其中 ON 代表連接(connection)而 OFF 代表斷絕(disconnection)，以及電阻 64 之阻值例如是 1.5K 歐姆(Ω)，電壓源 VDD 之電壓值例如是 3.3 伏特

（請先閱讀背面之注意事項再填寫本頁）
裝
訂
線
經濟部智慧財產局員工消費合作社印製
本紙張尺度適用中國國家標準（CNS）A4規格（210×297公釐）

Microchip Ex. 1004, p. 91
Microchip v. Aptiv
IPR2024-00558

五、發明說明（12）

(V)。USB 收發器 66 之一端連接至連結佈線器 50，另一端連接至訊號端 DP 68 與訊號端 DM 70，用以接收來自連結佈線器 50(或訊號端 68、70)的資料訊息，並將此資料訊息傳送至連接端 68、70(或連結佈線器 50)。

換言之，USB 集線器 44 之每一上傳埠 46a~46n 用以提供實際之連結至不同個人電腦 40a~40n 之 USB 主機控制器 50a~50n，且每一上傳埠 46a~46n 內含有一連接/斷絕之機制，由轉換控制器 52 控制不同上傳埠 46a~46n 之連接或斷絕。而 USB 集線器 44 之每一下傳埠 48a~48n 則用以提供實際之連結至 USB 裝置 42a~42n，且每一下傳埠 42a~42n 內含有一裝置附加/分離(attach/detach)偵測線路(未繪示出)，如熟習者所知，用以判斷下傳埠 48a~48n 之狀態並通知主機控制器作爲埠狀態之更新。

請參照第 9 圖，其繪示的是依照第 6 圖之本發明 USB 集線器 44 之連結佈線器 50 的詳細結構圖。

連結佈線器 50 包括一多工器(MUX)72 與一指令解譯器(Command Parser)74。多工器 72 連結於上傳埠 46a~46n 與傳統 USB 集線器 54 間，此 N 選一之多工器 72 由轉換控制器 52 之輸出控制，被選擇到之上傳埠 46a~46n 稱爲集線器埠(Hub port)，其他則稱爲裝置埠(Device port)。集線器埠所接之 USB 主機控制器擁有 USB 集線器 44 之控制權，並控制所有接在此 USB 集線器 44 之下傳埠 48a~48n 的 USB 裝置 42a~42n 資料存取。指令解譯器 74 用以解碼裝置埠和集線器埠從各個人電腦 40a~40n 之主機控制器 50a~50n 送來

（請先閱讀背面之注意事項再填寫本頁）

裝

訂

線

經濟部智慧財產局員工消費合作社印製

本紙張尺度適用中國國家標準（CNS）A4規格（210×297公釐）

五、發明說明(13)

的指令，並回應相關的資料給主機控制器 50a~50n，同時，指令解譯器 74 會將解析之結果送至轉換控制器 52 作爲控制之部分依據。

請參照第 10 圖，其繪示的是依照第 6 圖之本發明 USB 集線器 44 之轉換控制器 52 的詳細結構圖。

轉換控制器 52 經由其內部之組合邏輯控制器 76 接收指令解譯器 74 之結果加上手動切換之選擇，產生控制多工器 72 之訊號來決定何者是集線器埠，同時輸出控制信號至上傳埠 46a~46n，並在集線器埠、裝置埠切換時，對相關之埠做斷絕/連接之控制。

本發明之實施方法將詳細描述於下，並請同時配合參照第 5 圖至第 10 圖。

在完成電源開啓(power on)或重設(reset)之起始化(Initialization)動作之後，所有的上傳埠 46a~46n 爲連接狀態。之後，轉換控制器 52 依據手動切換之設定(亦即選擇第 10 圖之 S0~SN 其中之一)，控制連結佈線器 50 中之多工器 72 選擇上傳埠 46a~46n 其中之一爲集線器埠(例如上傳埠 46a)，此集線器埠 46a 連結之 USB 主機控制器 50a 控制經由多工器 72 連結之 USB 集線器 54，此時 USB 主機控制器 50a 所屬之個人電腦 40a 具有 USB 集線器 54 之使用權，並控制 USB 集線器 54 所連接 USB 裝置 48a~48n 資料之傳輸。此外，手動切換爲可選擇的(optional)，當無手動切換時，轉換控制器 52 可預設某一上傳埠(例如上傳埠 46a)爲集線器埠，欲使用 USB 集線器 44 之個人電腦必須連接至此手

(請先閱讀背面之注意事項再填寫本頁)

裝

訂

線

經濟部智慧財產局員工消費合作社印製

本紙張尺度適用中國國家標準(CNS)A4規格(210×297公釐)

五、發明說明 (14)

動切換設定或預設之上傳埠。

當接至集線器埠之 USB 主機控制器使用 USB 集線器 44 時，指令解譯器 74 接收經裝置埠送來之指令並回應相關之訊息給此裝置埠上接之 USB 主機控制器，使 USB 主機控制器視指令解譯器 74 爲單一之 USB 裝置，並可分辨個別個人電腦送來的指令。若其中之一個人電腦(例如個人電腦 40n)欲使用 USB 集線器 44 及控制 USB 集線器 44 下接之 USB 裝置 48a~48n 時，其 USB 主機控制器 50n 送出一特別之指令(集線器要求指令 HRQ)給指令解譯器 74，指令解譯器 74 解析個人電腦 40n 送來之集線器要求指令後進入集線器仲裁狀態(HARB)，並回應此狀態給所有的 USB 主機控制器 50a~50n。接著，個人電腦 40a 判斷切換 USB 集線器 44 之適當時機後，送出另一特別之指令(集線器確認指令 HACK)給指令解譯器 74，指令解譯器 74 將指令及狀態轉換成控制信號(HRQ/HACK/HARB)給轉換控制器 52 控制 USB 集線器 44 之切換。

當個人電腦 40n 產生之 HRQ 指令啓動(active)後，且個人電腦 40a 產生之 HACK 指令啓動時，轉換控制器 52 對上傳埠 46a 與 46n 做斷絕動作後，控制多工器 72 切換至上傳埠 46n，最後再將上傳埠 46a 與 46n 做連接動作。經過多工器 72 切換後重新連接 USB 主機控制器 50a、50n 之上傳埠 46a 與 46n，達到集線器埠與裝置埠互換之目的。同時，個人電腦 40n 上之 USB 主機控制器 50n 取得 USB 集線器 44 之所有權，並控制 USB 集線器 44 下接之 USB 裝置

(請先閱讀背面之注意事項再填寫本頁)
裝
訂
線
經濟部智慧財產局員工消費合作社印製
本紙張尺度適用中國國家標準（CNS）A4規格（210×297公釐）

Microchip Ex. 1004, p. 94
Microchip v. Aptiv
IPR2024-00558

五、發明說明（15）

48a~48n，達成不同個人電腦(40a、40n)切換使用 USB 集線器 44 之目的。

對於 USB 主機控制器之實施步驟如下所述。USB 主機控制器先判斷本身是否已控制 USB 集線器 44，若是，則當另一 USB 主機控制器要求使用 USB 集線器 44 時，會使轉換控制器 52 進入仲裁狀態，並通知個人電腦。此時，個人電腦決定是否可被切換，若是允許被切換的話，則送出集線器確認指令 HACK 通知轉換控制器 52 做切換。反之，若不允許被切換的話，則先將 USB 集線器 44 下接之 USB 裝置 48a~48n 之驅動程式(driver)卸載(unload)，或對相關之應用軟體做必要之處理。

若此一 USB 主機控制器目前不控制 USB 集線器 44，可於應用軟體的控制下決定是否提出 USB 集線器 44 之要求，而提出之條件、時間可依使用者設定配合轉換控制器 52 達到自動切換的功能。另，在送出集線器要求指令 HRQ 之前，需先判斷轉換控制器 52 是否正處於仲裁狀態，以避免要求信號被錯失(miss)。

對於轉換控制器 52 之實施步驟如下所述。轉換控制器 52 內有一計時器(未繪示出)，用以計時在手動切換指定或預設之上傳埠上，是否接上 USB 主機控制器，若無，則該上傳埠無法於計時超過一段時間(Timeout)內收到指令，表示上傳埠未接到任何 USB 主機控制器或 USB 主機控制器接在非指定之埠上。轉換控制器 52 即進行所有上傳埠 46a~46n 反覆搜尋之動作，若 USB 主機控制器接在另一上

（請先閱讀背面之注意事項再填寫本頁）

訂

經濟部智慧財產局員工消費合作社印製

本紙張尺度適用中國國家標準（CNS）A4規格（210×297公釐）

Microchip Ex. 1004, p. 95
Microchip v. Aptiv
IPR2024-00558

五、發明說明（16）

傳埠或者中途才被接上，則搜尋動作能正確將其設定爲集線器埠(46a)，並使用 USB 集線器 44。在集線器埠使用 USB 集線器 44 時，其他裝置埠(46n)可經由軟體控制自動或由使用者指定由 USB 主機控制器 50n 送出集線器要求指令 HRQ，經由轉換控制器 52、USB 主機控制器 50a 與 50n 之互動而切換 USB 集線器 44 之使用權。

上述轉換控制器 52 實行的方法，可以是微控制器或硬體結合控制邏輯，以及指令解譯器 74 實行的方法，可以是微控制器或硬體狀態機制。

綜上所述，本發明具有以下的優點：

1. 經由軟體控制選擇切換之個人電腦，並可達到自動切換的功能。

2. 軟體可判斷目前正被使用之 USB 裝置是否允許切換，避免影響其應用功能。

3. 將傳統資料轉換器之功能與 USB 集線器整合，可有效節省成本。

4. 無電纜過長之憂慮，並可避免切換造成的雜訊。

5. 依據集線器下傳埠的數量多寡，可一次切換多個 USB 裝置。

雖然本發明已以較佳實施例揭露如上，然其並非用以限定本發明，任何熟習此技藝者，在不脫離本發明之精神和範圍內，當可作各種之更動與潤飾，因此本發明之保護範圍當視後附之申請專利範圍所界定者爲準。

（請先閱讀背面之注意事項再填寫本頁）
裝
訂
線
經濟部智慧財產局員工消費合作社印製
本紙張尺度適用中國國家標準（CNS）A4規格（210×297公釐）

Microchip Ex. 1004, p. 96
Microchip v. Aptiv
IPR2024-00558

470887

54841wf.doc/006

A5
B5

四、中文發明摘要（發明之名稱：具有多個上傳埠並可在不同主機間切換之USB集線器及使用該USB集線器之電腦系統）

一種具有多個上傳埠並可在不同主機間切換之 USB 集線器及使用該 USB 集線器之電腦系統，可依據不同電腦主機之要求或手動切換之選擇，在適當時機將其使用權切換給需使用 USB 集線器之電腦主機，使電腦主機可控制所有接在 USB 集線器之下傳埠的 USB 裝置資料存取。本發明可經由電腦軟體控制選擇切換之電腦主機，並可達到自動切換的功能，且軟體可判斷目前正被使用之 USB 裝置是否允許切換，避免影響其應用功能。同時將傳統資料轉換器之功能與 USB 集線器整合，可有效節省成本，並且無電纜過長之憂慮，可避免切換造成的雜訊。並可依據 USB 集線器之下傳埠的數量多寡，一次切換使用多個 USB 裝置。

英文發明摘要（發明之名稱：　　）

（請先閱讀背面之注意事項再填寫本頁各欄）

裝

訂

線

經濟部中央標準局員工消費合作社印製

本紙張尺度適用中國國家標準（CNS）A4規格（210×297公釐）

Microchip Ex. 1004, p. 97
Microchip v. Aptiv
IPR2024-00558

六、申請專利範圍

1.一種具有多個上傳埠並可在不同主機間切換之 USB 集線器，包括：

複數個上傳埠，該些上傳埠可分別被控制其斷絕/連接之時序，且各該上傳埠分別用以提供實際之連結至一不同之電腦主機中；

複數個下傳埠，各該下傳埠分別用以提供實際之連結至一不同之 USB 裝置中；

一連結佈線器，連接該些上傳埠，該連結佈線器用以解碼來自各該電腦主機送來的指令，並回應相關的資料給各該電腦主機，同時送出解析後之一結果訊號，且該連結佈線器接收一控制訊號，並依據該控制訊號切換該連結佈線器之一多工器指向該些上傳埠其中之一；

一轉換控制器，連接該些上傳埠與該連結佈線器，用以依據該結果訊號與/或一手動切換，產生該控制訊號來控制各該上傳埠之斷絕/連接狀態；以及

一傳統 USB 集線器，用以上傳由該些下傳埠送來的資料及下傳經由該連結佈線器送來的集線器埠資料，並提供其本身之狀態給連接該集線器埠之電腦主機，使該電腦主機依據該傳統 USB 集線器之不同狀態控制該些下傳埠。

2.如申請專利範圍第 1 項所述之具有多個上傳埠並可在不同主機間切換之 USB 集線器，其中各該上傳埠包括：

一電阻，該電阻之兩端分別耦接至一電壓源與一訊號端 DP，且該電阻接收來自該轉換控制器之該控制信號，並依據該控制信號來決定各該上傳埠之斷絕/連接狀態；以及

（請先閱讀背面之注意事項再填寫本頁）
裝
訂
線
經濟部中央標準局員工消費合作社印製
本紙張尺度適用中國國家標準（CNS）A4規格（210×297公釐）

Microchip Ex. 1004, p. 98
Microchip v. Aptiv
IPR2024-00558

六、申請專利範圍

一 USB 收發器，該 USB 收發器之一端連接至該連結佈線器，其另一端連接至該訊號端 DP 與一訊號端 DM，用以與連接該上傳埠之電腦主機間上傳或下傳資料。

3.如申請專利範圍第 2 項所述之具有多個上傳埠並可在不同主機間切換之 USB 集線器，其中該電阻之阻值包括 1.5K 歐姆或其他合乎 USB 規格之阻值。

4.如申請專利範圍第 2 項所述之具有多個上傳埠並可在不同主機間切換之 USB 集線器，其中該電壓源之電壓值包括 3.3 伏特或其他合乎 USB 規格之電壓值。

5.如申請專利範圍第1項所述之具有多個上傳埠並可在不同主機間切換之USB集線器，其中該連結佈線器包括：

一多工器，連結於該些上傳埠與該傳統 USB 集線器間，該多工器係由該轉換控制器之輸出控制，指向其中一上傳埠與傳統 USB 集線器相連接，被選擇到之該上傳埠稱爲集線器埠，其他則稱爲裝置埠；以及

一指令解譯器，用以解碼該些上傳埠從各該電腦主機送來的指令，並回應相關的資料給各該電腦主機，同時將解析之結果送至該轉換控制器中作爲控制之部分依據。

6.如申請專利範圍第 5 項所述之具有多個上傳埠並可在不同主機間切換之 USB 集線器，其中該指令解譯器包括微控制器或其他可解譯指令之機制。

7.如申請專利範圍第 1 項所述之具有多個上傳埠並可在不同主機間切換之 USB 集線器，其中該轉換控制器包括

（請先閱讀背面之注意事項再填寫本頁）
裝
訂
線
經濟部中央標準局員工消費合作社印製
本紙張尺度適用中國國家標準（CNS）A4規格（210×297公釐）

六、申請專利範圍

一組合邏輯控制器，用以經由該組合邏輯控制器接收來自該連結佈線器之該結果訊號或/與該手動切換之選擇，產生該控制訊號來決定哪一該上傳埠是集線器埠，同時輸出該控制信號至該些上傳埠，並在集線器埠與裝置埠切換時，對相關之埠做斷絕/連接之控制。

8.如申請專利範圍第 1 項所述之具有多個上傳埠並可在不同主機間切換之 USB 集線器，其中該傳統 USB 集線器包括：

一集線器中繼器，用以上傳由該些下傳埠送來的資料及下傳由該連結佈線器送來的資料；以及

一集線器控制器，連接該集線器中繼器，該集線器控制器用以提供該傳統 USB 集線器之狀態給該些電腦主機，使該些電腦主機依據該傳統 USB 集線器之不同狀態控制該些下傳埠。

9.如申請專利範圍第1項所述之具有多個上傳埠並可在不同主機間切換之USB集線器，其中各該上傳埠內含有一連接/斷絕之機制，由該轉換控制器控制不同之各該上傳埠的連接與斷絕。

10.如申請專利範圍第1項所述之具有多個上傳埠並可在不同主機間切換之USB集線器，其中各該下傳埠內含有一裝置附加/分離偵測線路，用以判斷各該下傳埠之狀態並通知該些電腦主機作爲埠狀態之更新。

11.如申請專利範圍第1項所述之具有多個上傳埠並可在不同主機間切換之USB集線器，其中各該電腦主機分別

（請先閱讀背面之注意事項再填寫本頁）
裝
訂
經濟部中央標準局員工消費合作社印製
本紙張尺度適用中國國家標準（CNS）A4規格（210×297公釐）

Microchip Ex. 1004, p. 100
Microchip v. Aptiv
IPR2024-00558

六、申請專利範圍

具有一USB主機控制器，連接至各該上傳埠中，以透過該USB主機控制器控制該USB集線器。

12.如申請專利範圍第 1 項所述之具有多個上傳埠並可在不同主機間切換之 USB 集線器，其中該電腦主機包括個人電腦與可控制 USB 傳輸協定之任何平台。

13.如申請專利範圍第 1 項所述之具有多個上傳埠並可在不同主機間切換之 USB 集線器，其中各該 USB 裝置包括鍵盤、滑鼠、印表機等週邊裝置其中之一。

14.如申請專利範圍第 1 項所述之具有多個上傳埠並可在不同主機間切換之 USB 集線器，其中該轉換控制器包括微控制器與其他可產生該控制訊號之邏輯。

15.如申請專利範圍第 1 項所述之具有多個上傳埠並可在不同主機間切換之 USB 集線器，其中當該連結佈線器依據該控制訊號切換該多工器指向該些上傳埠其中之一時，被切換連接之該上傳埠係爲集線器埠，其他未連接者則爲裝置埠，而該集線器埠所接之該電腦主機擁有該 USB 集線器之控制權，並控制所有接在該 USB 集線器之該些下傳埠的該些 USB 裝置資料存取。

16.一種電腦系統，包括：

複數台電腦主機；

複數台 USB 裝置；以及

一 USB 集線器，具有複數個上傳埠與複數個下傳埠，各該上傳埠分別連接至各該電腦主機中，以及各該下傳埠分別連接至各該 USB 裝置中，該 USB 集線器用以上傳由各

（請先閱讀背面之注意事項再填寫本頁）

裝 訂 線

經濟部中央標準局員工消費合作社印製

本紙張尺度適用中國國家標準（CNS）A4規格（210×297公釐）

六、申請專利範圍

該 USB 裝置送來的資料及下傳由各該電腦主機送來的資料；

其中，在正常操作下，僅有一台該電腦主機具有該 USB 集線器之使用權，代表該電腦主機可控制所有接在該 USB 集線器之該些下傳埠的該些 USB 裝置資料存取，當有另一台該電腦主機送出一集線器要求指令給該 USB 集線器，要求使用該 USB 集線器及控制該 USB 集線器下接之該些 USB 裝置時，該 USB 集線器會進入一集線器仲裁狀態，並在一適當時機後將其使用權轉交給該另一台該電腦主機，此時該另一台該電腦主機即具有該 USB 集線器之使用權，並可控制所有接在該 USB 集線器之該些下傳埠的該些 USB 裝置資料存取，達到不同該電腦主機切換使用該 USB 集線器之目的。

17.如申請專利範圍第 16 項所述之電腦系統，其中該 USB 集線器可具有一手動切換開關，經由控制該手動切換開關可達到不同該電腦主機切換使用該 USB 集線器之目的。

18.如申請專利範圍第 16 項所述之電腦系統，其中該 USB 集線器包括：

一連結佈線器，連接該些上傳埠，該連結佈線器用以解碼來自各該電腦主機送來的指令，並回應相關的資料給各該電腦主機，同時送出解析後之一結果訊號，且該連結佈線器接收一控制訊號，並依據該控制訊號切換連接至該些上傳埠之一，其中，被切換連接之該上傳埠係爲集線器

（請先閱讀背面之注意事項再填寫本頁）
裝
訂
經濟部中央標準局員工消費合作社印製
本紙張尺度適用中國國家標準（CNS）A4規格（210×297公釐）

Microchip Ex. 1004, p. 102
Microchip v. Aptiv
IPR2024-00558

六、申請專利範圍

埠，其他未連接者則爲裝置埠，而集線器埠所接之該電腦主機擁有該 USB 集線器之控制權，並控制所有接在該 USB 集線器之該些下傳埠的該些 USB 裝置資料存取；

一轉換控制器，連接該些上傳埠與該連結佈線器，用以依據該結果訊號與一手動切換，產生該控制訊號來控制各該上傳埠與該連結佈線器之連接狀態；以及

一傳統 USB 集線器，用以上傳由該些下傳埠送來的資料及下傳由該連結佈線器送來的資料，並提供其本身之狀態給該些電腦主機，使該些電腦主機依據該傳統 USB 集線器之不同狀態控制該些下傳埠。

19.如申請專利範圍第 18 項所述之電腦系統，其中該 USB 集線器之各該上傳埠包括：

一電阻，該電阻之兩端分別耦接至一電壓源與一訊號端 DP，且該電阻接收來自該轉換控制器之該控制信號，並依據該控制信號來決定各該上傳埠之斷絕/連接狀態；以及

一 USB 收發器，該 USB 收發器之一端連接至該連結佈線器，其另一端連接至該訊號端 DP 與一訊號端 DM，用以與連接該上傳埠之電腦主機間上傳或下傳資料。

20.如申請專利範圍第 18 項所述之電腦系統，其中該連結佈線器包括：

一多工器，連結於該些上傳埠與該傳統 USB 集線器間，該多工器係由該轉換控制器之輸出控制，被選擇到之該上傳埠稱爲集線器埠，其他則稱爲裝置埠；以及

一指令解譯器，用以解碼該些上傳埠從各該電腦主機

（請先閱讀背面之注意事項再填寫本頁）
裝
訂
線
經濟部中央標準局員工消費合作社印製
本紙張尺度適用中國國家標準（CNS）A4規格（210×297公釐）

Microchip Ex. 1004, p. 103
Microchip v. Aptiv
IPR2024-00558

六、申請專利範圍

送來的指令，並回應相關的資料給各該電腦主機，同時將解析之結果送至該轉換控制器中作爲控制之部分依據。

21.如申請專利範圍第 20 項所述之電腦系統，其中該指令解譯器包括微控制器或其他可解譯指令之機制。

22.如申請專利範圍第 18 項所述之電腦系統，其中該轉換控制器包括一組合邏輯控制器，用以經由該組合邏輯控制器接收來自該連結佈線器之該結果訊號與該手動切換開關之選擇，產生該控制訊號來決定哪一該上傳埠是集線器埠，同時輸出該控制信號至該些上傳埠，並在集線器埠與裝置埠切換時，對相關之埠做斷絕/連接之控制。

23.如申請專利範圍第 18 項所述之電腦系統，其中該傳統 USB 集線器包括：

一集線器中繼器，用以上傳由該些下傳埠送來的資料及下傳由該連結佈線器送來的資料；以及

一集線器控制器，連接該集線器中繼器，該集線器控制器用以提供該傳統 USB 集線器之狀態給該些電腦主機，使該些電腦主機依據該傳統 USB 集線器之不同狀態控制該些下傳埠。

24.如申請專利範圍第16項所述之電腦系統，其中各該上傳埠內含有一連接/斷絕之機制，由一轉換控制器控制不同之各該上傳埠的連接與斷絕。

25.如申請專利範圍第16項所述之電腦系統，其中各該下傳埠內含有一裝置附加/分離偵測線路，用以判斷各該下傳埠之狀態並通知該些電腦主機作爲埠狀態之更新。

（請先閱讀背面之注意事項再填寫本頁）
裝
訂
經濟部中央標準局員工消費合作社印製
本紙張尺度適用中國國家標準（CNS）A4規格（210×297公釐）

Microchip Ex. 1004, p. 104
Microchip v. Aptiv
IPR2024-00558

六、申請專利範圍

26.如申請專利範圍第16項所述之電腦系統，其中各該電腦主機分別具有一USB主機控制器，連接至各該上傳埠中，以透過該USB主機控制器控制該USB集線器。

27.如申請專利範圍第 16 項所述之電腦系統，其中該電腦主機包括個人電腦與可控制 USB 傳輸協定之任何平台。

28.如申請專利範圍第 16 項所述之電腦系統，其中各該 USB 裝置包括鍵盤、滑鼠、印表機等週邊裝置其中之一。

29.如申請專利範圍第 18 項所述之電腦系統，其中該轉換控制器包括微控制器與其他可產生該控制訊號之邏輯。

（請先閱讀背面之注意事項再填寫本頁）

裝

訂

線

經濟部中央標準局員工消費合作社印製

本紙張尺度適用中國國家標準（CNS）A4規格（210×297公釐）

Microchip Ex. 1004, p. 105
Microchip v. Aptiv
IPR2024-00558

470887
89104350

5464TW

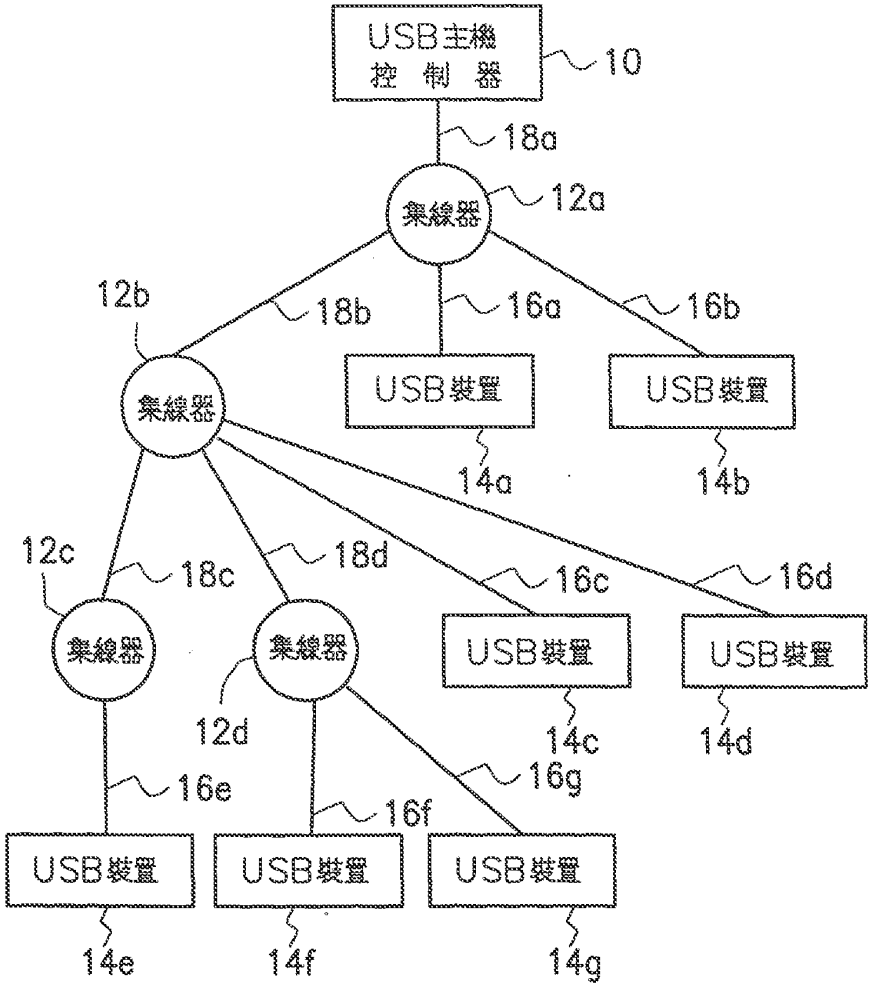

第 1 圖

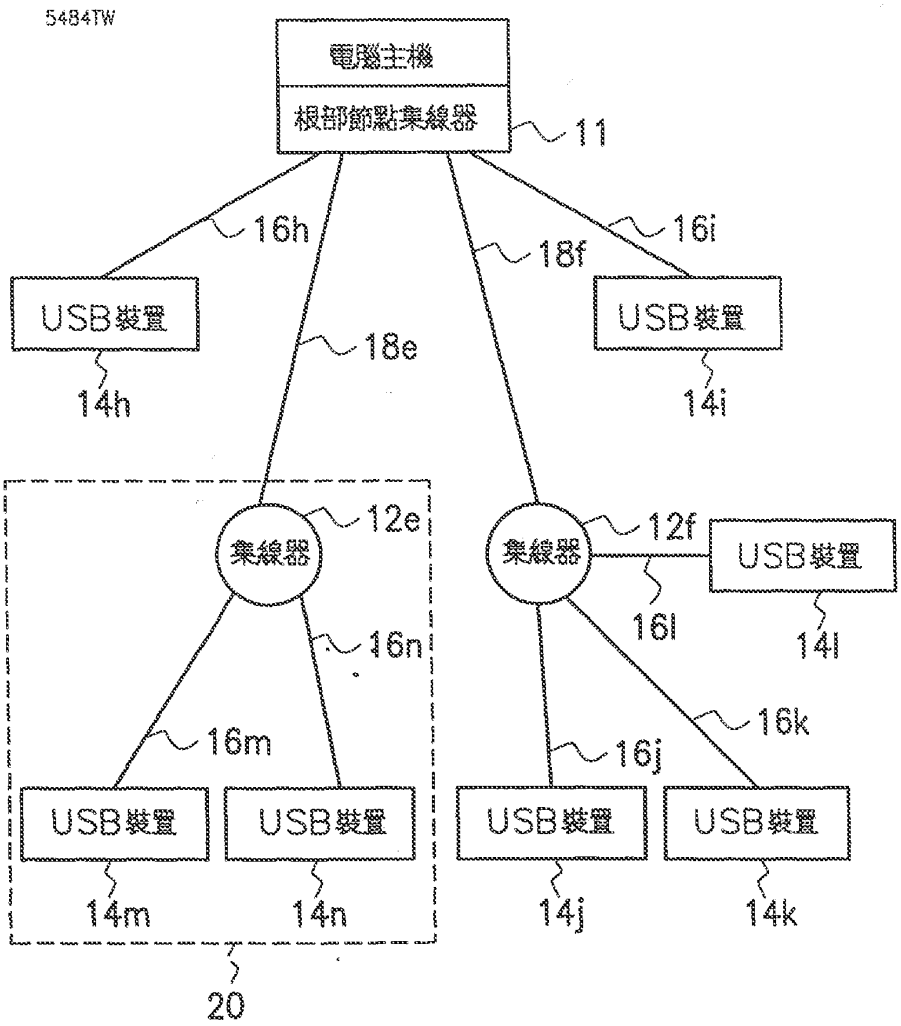
5484TW
電腦主機
根部節點集線器
11
16h
18f
16i
USB裝置
USB裝置
18e
14h
14i
12e
集線器
集線器
12f
USB裝置
16l
14l
16n
16m
16k
16j
USB裝置
USB裝置
USB裝置
USB裝置
14m
14n
14j
14k
20

第 2 圖

5484TW

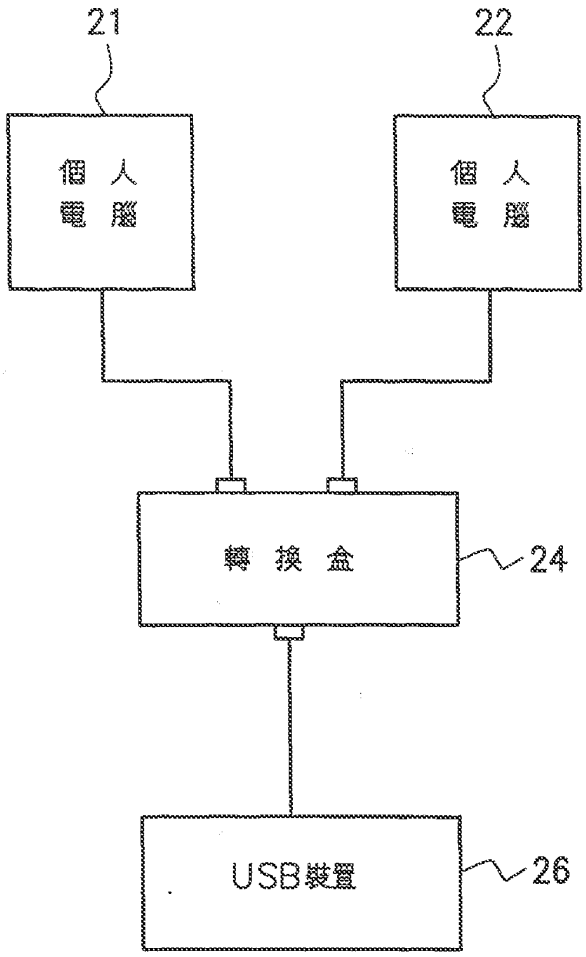

第 3 圖

5484TW

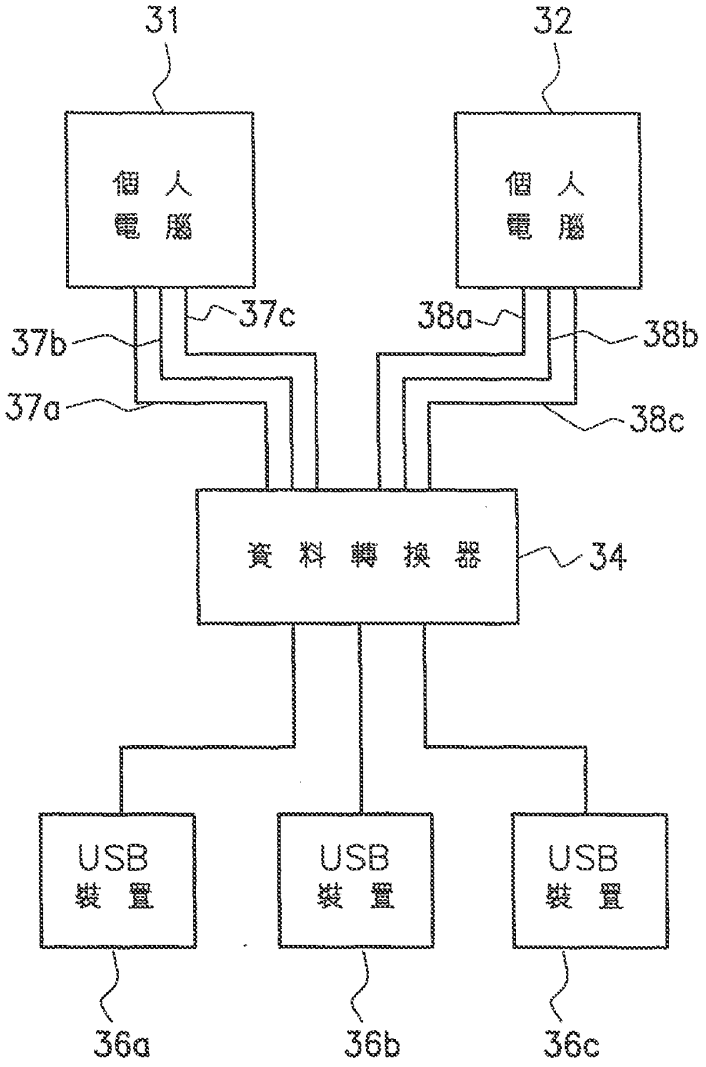
31
32
個人電腦
個人電腦
37c
38a
37b
38b
37a
38c
資料轉換器
34
USB裝置
USB裝置
USB裝置
36a
36b
36c

第 4 圖

5484TW

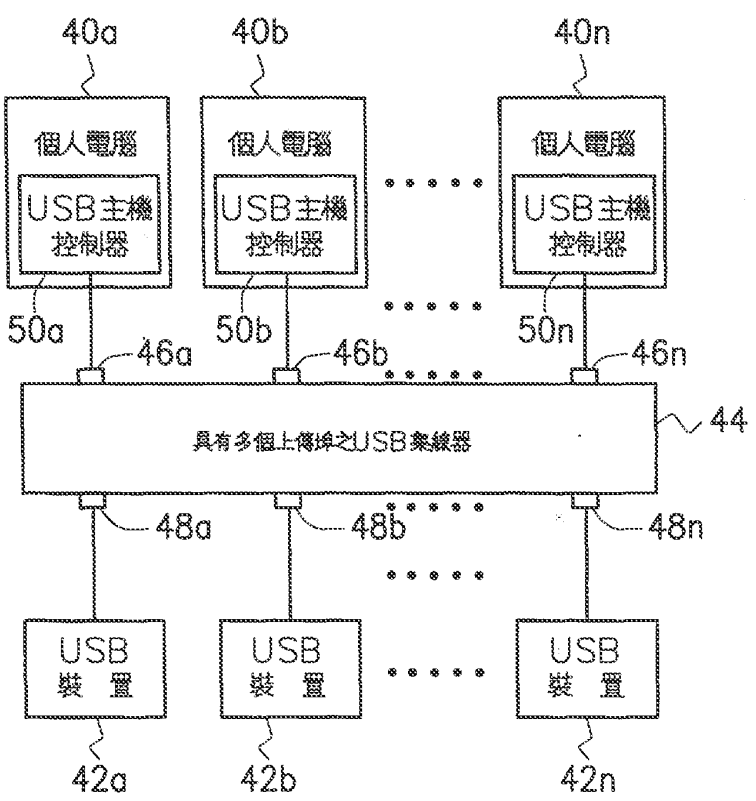

第 5 圖

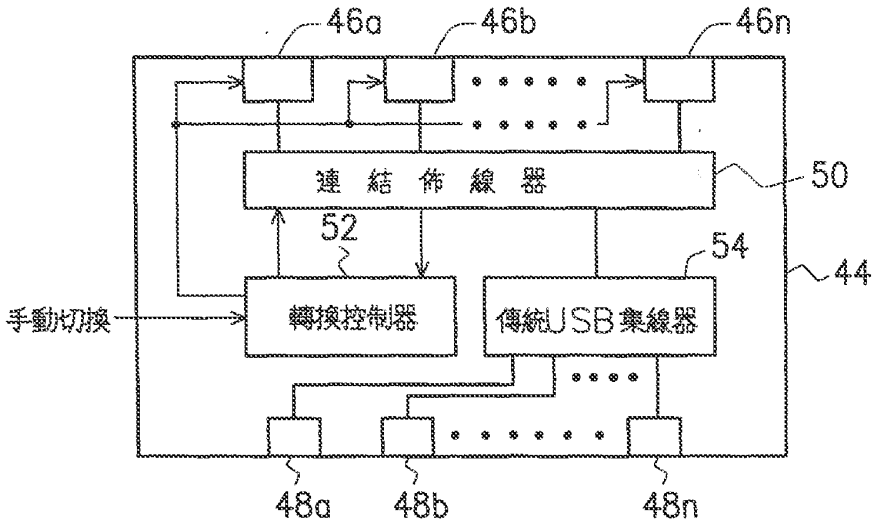

第 6 圖

5484TW

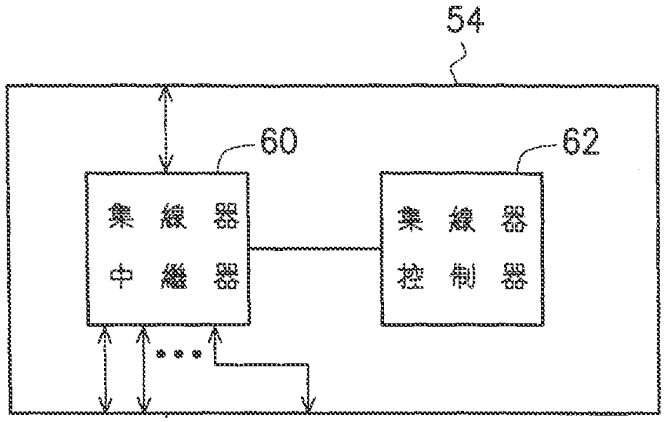

第 7 圖

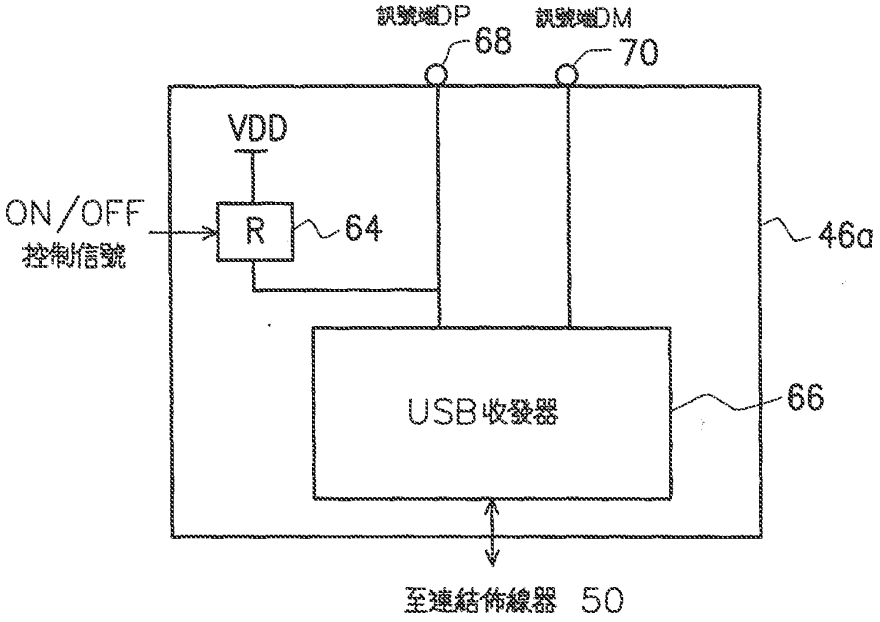

第 8 圖

5484TW

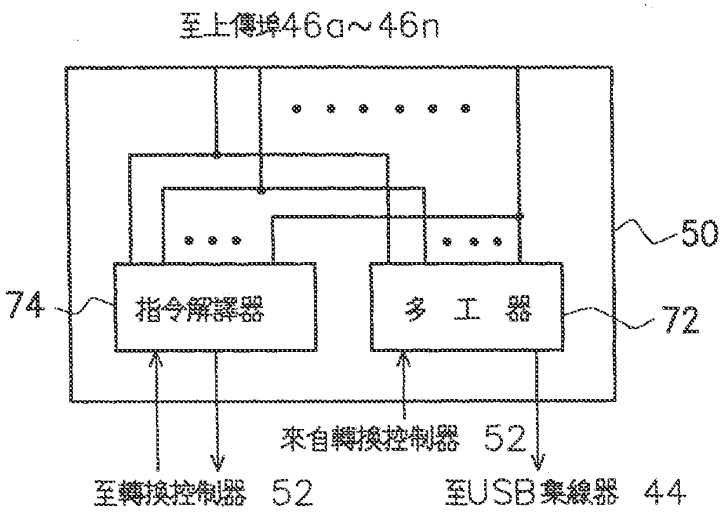

第 9 圖

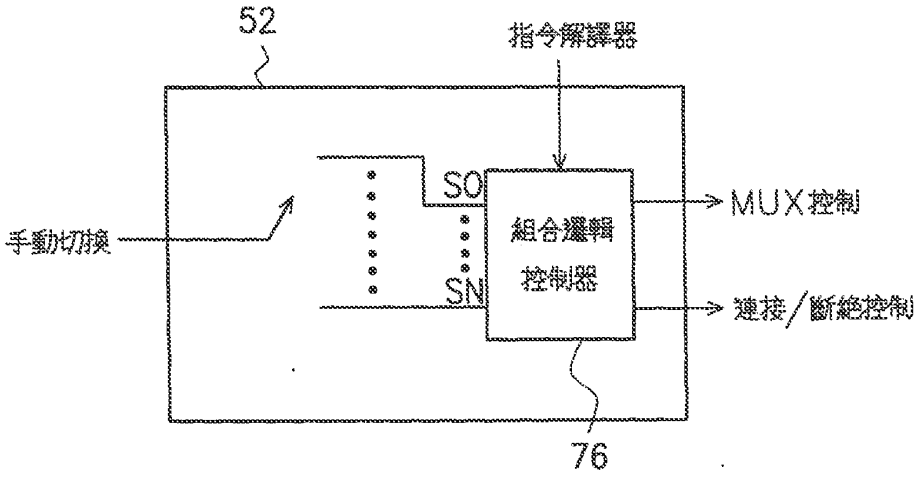

第10圖

Electronic Acknowledgement Receipt

EFS ID:	27301803
Application Number:	15268728
International Application Number:	
Confirmation Number:	4506
Title of Invention:	FLEXIBLE MOBILE DEVICE CONNECTIVITY TO AUTOMOTIVE SYSTEMS WITH UBS HUBS
First Named Inventor/Applicant Name:	Robert M. Voto
Customer Number:	22851
Filer:	Lawrence Dean Hazelton/Kandace Powell
Filer Authorized By:	Lawrence Dean Hazelton
Attorney Docket Number:	DP-322037 CON
Receipt Date:	24-OCT-2016
Filing Date:	19-SEP-2016
Time Stamp:	15:23:29
Application Type:	Utility under 35 USC 111(a)

Payment information:

Submitted with Payment	no

File Listing:

Document Number	Document Description	File Name	File Size(Bytes)/ Message Digest	Multi Part /.zip	Pages (if appl.)
1	Information Disclosure Statement (IDS) Form (SB08)	DP322037CON_ids.pdf	613206 4dcd17e4ccb92b1193b39c0b8216d1b9f322da5e	no	6

Warnings:

Information:					
2	Foreign Reference	JP2003256351A.pdf	363900 03b215ded563ca6b5ccd3092b6b9dc9b16635936	no	7
Warnings:					
The page size in the PDF is too large. The pages should be 8.5 x 11 or A4. If this PDF is submitted, the pages will be resized upon entry into the Image File Wrapper and may affect subsequent processing					
Information:					
3	Foreign Reference	TW470887B.pdf	1302665 eff0033415ae51b6a54353366417e2dbffafa872	no	35
Warnings:					
The page size in the PDF is too large. The pages should be 8.5 x 11 or A4. If this PDF is submitted, the pages will be resized upon entry into the Image File Wrapper and may affect subsequent processing					
Information:					
4	Non Patent Literature	03043.pdf	733304 b7e140d0db2a39b012a23f8200854063ac8ec099	no	45
Warnings:					
Information:					
5	Non Patent Literature	42904.pdf	497815 cfc5eb6a8bcdcea15a88b2d1f14aad02eeeb746c	no	10
Warnings:					
Information:					
6	Non Patent Literature	APC_USB.pdf	97336 6044662ea171a74be5a42eee345a40101cf42c08	no	3
Warnings:					
Information:					
7	Non Patent Literature	Tyre_Terian.pdf	85360 f77737a12f3f3311efe88329b604ca1e7ca74130	no	7
Warnings:					
Information:					
			Total Files Size (in bytes):	3693586	

This Acknowledgement Receipt evidences receipt on the noted date by the USPTO of the indicated documents, characterized by the applicant, and including page counts, where applicable. It serves as evidence of receipt similar to a Post Card, as described in MPEP 503.

New Applications Under 35 U.S.C. 111
If a new application is being filed and the application includes the necessary components for a filing date (see 37 CFR 1.53(b)-(d) and MPEP 506), a Filing Receipt (37 CFR 1.54) will be issued in due course and the date shown on this Acknowledgement Receipt will establish the filing date of the application.

National Stage of an International Application under 35 U.S.C. 371
If a timely submission to enter the national stage of an international application is compliant with the conditions of 35 U.S.C. 371 and other applicable requirements a Form PCT/DO/EO/903 indicating acceptance of the application as a national stage submission under 35 U.S.C. 371 will be issued in addition to the Filing Receipt, in due course.

New International Application Filed with the USPTO as a Receiving Office
If a new international application is being filed and the international application includes the necessary components for an international filing date (see PCT Article 11 and MPEP 1810), a Notification of the International Application Number and of the International Filing Date (Form PCT/RO/105) will be issued in due course, subject to prescriptions concerning national security, and the date shown on this Acknowledgement Receipt will establish the international filing date of the application.

PTO/AIA/80 (07-12)
Approved for use through 11/30/2014. OMB 0651-0035
U.S. Patent and Trademark Office; U.S DEPARTMENT OF COMMERCE
Under the Paperwork Reduction Act of 1995, no persons are required to respond to a collection of information unless it displays a valid OMB control number.

POWER OF ATTORNEY TO PROSECUTE APPLICATIONS BEFORE THE USPTO

I hereby revoke all previous powers of attorney given in the application identified in the attached statement under 37 CFR 3.73(c).

I hereby appoint:

[■] Practitioners associated with Customer Number: 22851

OR

[ ] Practitioner(s) named below (if more than ten patent practitioners are to be named, then a customer number must be used):

Name	Registration Number	Name	Registration Number

As attorney(s) or agent(s) to represent the undersigned before the United States Patent and Trademark Office (USPTO) in connection with any and all patent applications assigned only to the undersigned according to the USPTO assignment records or assignments documents attached to this form in accordance with 37 CFR 3.73(c).

Please change the correspondence address for the application identified in the attached statement under 37 CFR 3.73(c) to:

[ ] The address associated with Customer Number:

OR

[ ] Firm or Individual Name			
Address			
City		State	Zip
Country			
Telephone		Email	

Assignee Name and Address: Delphi Technologies, Inc.
P. O. Box 5052
M/C: 483-400-402
Troy, MI 48007-5052

A copy of this form, together with a statement under 37 CFR 3.73(c) (Form PTO/AIA/96 or equivalent) is required to be Filed in each application in which this form is used. The statement under 37 CFR 3.73(c) may be completed by one of The practitioners appointed in this form, and must identify the application in which this Power of Attorney is to be filed.

SIGNATURE of Assignee of Record

The individual whose signature and title is supplied below is authorized to act on behalf of the assignee

Signature	/Craig A. Baldwin/	Date	27 October 2016
Name	Craig A. Baldwin	Telephone	248-813-1214
Title	Assistant Secretary, Delphi Technologies, Inc.		

This collection of information is required by 37 CFR 1.31, 1.32 and 1.33. The information is required to obtain or retain a benefit by the public which is to file (and by the USPTO to process) an application. Confidentiality is governed by 35 U.S.C. 122 and 37 CFR 1.11 and 1.14. This collection is estimated to take 3 minutes to complete, including gathering, preparing, and submitting the completed application form to the USPTO. Time will vary depending upon the individual case. Any comments on the amount of time you require to complete this form and/or suggestions for reducing this burden, should be sent to the Chief Information Officer, U.S. Patent and Trademark Office, U.S. Department of Commerce, P.O. Box 1450, Alexandria, VA 22313-1450. DO NOT SEND FEES OR COMPLETED FORMS TO THIS ADDRESS. **SEND TO: Commissioner for Patents, P.O. Box 1450, Alexandria, VA 22313-1450.**

If you need assistance in completing the form, call 1-800-PTO-9199 and select option 2.

Privacy Act Statement

The **Privacy Act of 1974 (P.L. 93-579)** requires that you be given certain information in connection with your submission of the attached form related to a patent application or patent. Accordingly, pursuant to the requirements of the Act, please be advised that: (1) the general authority for the collection of this information is 35 U.S.C. 2(b)(2); (2) furnishing of the information solicited is voluntary; and (3) the principal purpose for which the information is used by the U.S. Patent and Trademark Office is to process and/or examine your submission related to a patent application or patent. If you do not furnish the requested information, the U.S. Patent and Trademark Office may not be able to process and/or examine your submission, which may result in termination of proceedings or abandonment of the application or expiration of the patent.

The information provided by you in this form will be subject to the following routine uses:

1. The information on this form will be treated confidentially to the extent allowed under the Freedom of Information Act (5 U.S.C. 552) and the Privacy Act (5 U.S.C 552a). Records from this system of records may be disclosed to the Department of Justice to determine whether disclosure of these records is required by the Freedom of Information Act.
2. A record from this system of records may be disclosed, as a routine use, in the course of presenting evidence to a court, magistrate, or administrative tribunal, including disclosures to opposing counsel in the course of settlement negotiations.
3. A record in this system of records may be disclosed, as a routine use, to a Member of Congress submitting a request involving an individual, to whom the record pertains, when the individual has requested assistance from the Member with respect to the subject matter of the record.
4. A record in this system of records may be disclosed, as a routine use, to a contractor of the Agency having need for the information in order to perform a contract. Recipients of information shall be required to comply with the requirements of the Privacy Act of 1974, as amended, pursuant to 5 U.S.C. 552a(m).
5. A record related to an International Application filed under the Patent Cooperation Treaty in this system of records may be disclosed, as a routine use, to the International Bureau of the World Intellectual Property Organization, pursuant to the Patent Cooperation Treaty.
6. A record in this system of records may be disclosed, as a routine use, to another federal agency for purposes of National Security review (35 U.S.C. 181) and for review pursuant to the Atomic Energy Act (42 U.S.C. 218(c)).
7. A record from this system of records may be disclosed, as a routine use, to the Administrator, General Services, or his/her designee, during an inspection of records conducted by GSA as part of that agency's responsibility to recommend improvements in records management practices and programs, under authority of 44 U.S.C. 2904 and 2906. Such disclosure shall be made in accordance with the GSA regulations governing inspection of records for this purpose, and any other relevant (*i.e.*, GSA or Commerce) directive. Such disclosure shall not be used to make determinations about individuals.
8. A record from this system of records may be disclosed, as a routine use, to the public after either publication of the application pursuant to 35 U.S.C. 122(b) or issuance of a patent pursuant to 35 U.S.C. 151. Further, a record may be disclosed, subject to the limitations of 37 CFR 1.14, as a routine use, to the public if the record was filed in an application which became abandoned or in which the proceedings were terminated and which application is referenced by either a published application, an application open to public inspection or an issued patent.
9. A record from this system of records may be disclosed, as a routine use, to a Federal, State, or local law enforcement agency, if the USPTO becomes aware of a violation or potential violation of law or regulation.

PTO/AIA/96 (08-12)
Approved for use through 01/31/2013. OMB 0651-0031
U.S. Patent and Trademark Office; U.S. DEPARTMENT OF COMMERCE
Under the Paperwork Reduction Act of 1995, no persons are required to respond to a collection of information unless it displays a valid OMB control number.

STATEMENT UNDER 37 CFR 3.73(c)

Applicant/Patent Owner: Robert M. Voto, et al.

Application No./Patent No.: 15/268,728 Filed/Issue Date: 19 September 2016

Titled: FLEXIBLE MOBILE DEVICE CONNECTIVITY TO AUTOMOTIVE SYSTEMS WITH UBS HUBS

Delphi Technologies, Inc., a corporation

(Name of Assignee) (Type of Assignee, e.g., corporation, partnership, university, government agency, etc.)

states that, for the patent application/patent identified above, it is (choose **one** of options 1, 2, 3 or 4 below):

1. ☑ The assignee of the entire right, title, and interest.

2. ☐ An assignee of less than the entire right, title, and interest (check applicable box):

☐ The extent (by percentage) of its ownership interest is _____%. Additional Statement(s) by the owners holding the balance of the interest must be submitted to account for 100% of the ownership interest.

☐ There are unspecified percentages of ownership. The other parties, including inventors, who together own the entire right, title and interest are:

Additional Statement(s) by the owner(s) holding the balance of the interest must be submitted to account for the entire right, title, and interest.

3. ☐ The assignee of an undivided interest in the entirety (a complete assignment from one of the joint inventors was made). The other parties, including inventors, who together own the entire right, title, and interest are:

Additional Statement(s) by the owner(s) holding the balance of the interest must be submitted to account for the entire right, title, and interest.

4. ☐ The recipient, via a court proceeding or the like (*e.g.*, bankruptcy, probate), of an undivided interest in the entirety (a complete transfer of ownership interest was made). The certified document(s) showing the transfer is attached.

The interest identified in option 1, 2 or 3 above (not option 4) is evidenced by either (choose **one** of options A or B below):

A. ☑ An assignment from the inventor(s) of the patent application/patent identified above. The assignment was recorded in the United States Patent and Trademark Office at Reel _____, Frame _____, or for which a copy thereof is attached.

B. ☐ A chain of title from the inventor(s), of the patent application/patent identified above, to the current assignee as follows:

1. From: _____ To: _____

The document was recorded in the United States Patent and Trademark Office at

Reel _____, Frame _____, or for which a copy thereof is attached.

2. From: _____ To: _____

The document was recorded in the United States Patent and Trademark Office at

Reel _____, Frame _____, or for which a copy thereof is attached.

This collection of information is required by 37 CFR 3.73(b). The information is required to obtain or retain a benefit by the public which is to file (and by the USPTO to process) an application. Confidentiality is governed by 35 U.S.C. 122 and 37 CFR 1.11 and 1.14. This collection is estimated to take 12 minutes to complete, including gathering, preparing, and submitting the completed application form to the USPTO. Time will vary depending upon the individual case. Any comments on the amount of time you require to complete this form and/or suggestions for reducing this burden, should be sent to the Chief Information Officer, U.S. Patent and Trademark Office, U.S. Department of Commerce, P.O. Box 1450, Alexandria, VA 22313-1450. DO NOT SEND FEES OR COMPLETED FORMS TO THIS ADDRESS. **SEND TO: Commissioner for Patents, P.O. Box 1450, Alexandria, VA 22313-1450.**

If you need assistance in completing the form, call 1-800-PTO-9199 and select option 2.

Under the Paperwork Reduction Act of 1995, no persons are required to respond to a collection of information unless it displays a valid OMB control number.

STATEMENT UNDER 37 CFR 3.73(c)

3. From: _____ To: _____

The document was recorded in the United States Patent and Trademark Office at

Reel _____, Frame _____, or for which a copy thereof is attached.

4. From: _____ To: _____

The document was recorded in the United States Patent and Trademark Office at

Reel _____, Frame _____, or for which a copy thereof is attached.

5. From: _____ To: _____

The document was recorded in the United States Patent and Trademark Office at

Reel _____, Frame _____, or for which a copy thereof is attached.

6. From: _____ To: _____

The document was recorded in the United States Patent and Trademark Office at

Reel _____, Frame _____, or for which a copy thereof is attached.

☐ Additional documents in the chain of title are listed on a supplemental sheet(s).

☐ As required by 37 CFR 3.73(c)(1)(i), the documentary evidence of the chain of title from the original owner to the assignee was, or concurrently is being, submitted for recordation pursuant to 37 CFR 3.11.

[NOTE: A separate copy (i.e., a true copy of the original assignment document(s)) must be submitted to Assignment Division in accordance with 37 CFR Part 3, to record the assignment in the records of the USPTO. See MPEP 302.08]

The undersigned (whose title is supplied below) is authorized to act on behalf of the assignee.

/Craig A. Baldwin/	27 October 2016
Signature	Date
Craig A. Baldwin	Assistant Secretary 37772
Printed or Typed Name	Title or Registration Number

Privacy Act Statement

The **Privacy Act of 1974 (P.L. 93-579)** requires that you be given certain information in connection with your submission of the attached form related to a patent application or patent. Accordingly, pursuant to the requirements of the Act, please be advised that: (1) the general authority for the collection of this information is 35 U.S.C. 2(b)(2); (2) furnishing of the information solicited is voluntary; and (3) the principal purpose for which the information is used by the U.S. Patent and Trademark Office is to process and/or examine your submission related to a patent application or patent. If you do not furnish the requested information, the U.S. Patent and Trademark Office may not be able to process and/or examine your submission, which may result in termination of proceedings or abandonment of the application or expiration of the patent.

The information provided by you in this form will be subject to the following routine uses:

1. The information on this form will be treated confidentially to the extent allowed under the Freedom of Information Act (5 U.S.C. 552) and the Privacy Act (5 U.S.C 552a). Records from this system of records may be disclosed to the Department of Justice to determine whether disclosure of these records is required by the Freedom of Information Act.
2. A record from this system of records may be disclosed, as a routine use, in the course of presenting evidence to a court, magistrate, or administrative tribunal, including disclosures to opposing counsel in the course of settlement negotiations.
3. A record in this system of records may be disclosed, as a routine use, to a Member of Congress submitting a request involving an individual, to whom the record pertains, when the individual has requested assistance from the Member with respect to the subject matter of the record.
4. A record in this system of records may be disclosed, as a routine use, to a contractor of the Agency having need for the information in order to perform a contract. Recipients of information shall be required to comply with the requirements of the Privacy Act of 1974, as amended, pursuant to 5 U.S.C. 552a(m).
5. A record related to an International Application filed under the Patent Cooperation Treaty in this system of records may be disclosed, as a routine use, to the International Bureau of the World Intellectual Property Organization, pursuant to the Patent Cooperation Treaty.
6. A record in this system of records may be disclosed, as a routine use, to another federal agency for purposes of National Security review (35 U.S.C. 181) and for review pursuant to the Atomic Energy Act (42 U.S.C. 218(c)).
7. A record from this system of records may be disclosed, as a routine use, to the Administrator, General Services, or his/her designee, during an inspection of records conducted by GSA as part of that agency's responsibility to recommend improvements in records management practices and programs, under authority of 44 U.S.C. 2904 and 2906. Such disclosure shall be made in accordance with the GSA regulations governing inspection of records for this purpose, and any other relevant (*i.e.*, GSA or Commerce) directive. Such disclosure shall not be used to make determinations about individuals.
8. A record from this system of records may be disclosed, as a routine use, to the public after either publication of the application pursuant to 35 U.S.C. 122(b) or issuance of a patent pursuant to 35 U.S.C. 151. Further, a record may be disclosed, subject to the limitations of 37 CFR 1.14, as a routine use, to the public if the record was filed in an application which became abandoned or in which the proceedings were terminated and which application is referenced by either a published application, an application open to public inspection or an issued patent.
9. A record from this system of records may be disclosed, as a routine use, to a Federal, State, or local law enforcement agency, if the USPTO becomes aware of a violation or potential violation of law or regulation.

PTO/AIA/01 (08-12)
Approved for use through 01/31/2014. OMB 0651-0032
U.S. Patent and Trademark Office; U.S. DEPARTMENT OF COMMERCE
Under the Paperwork Reduction Act of 1995, no persons are required to respond to a collection of information unless it displays a valid OMB control number.

DECLARATION (37 CFR 1.63) FOR UTILITY OR DESIGN APPLICATION USING AN APPLICATION DATA SHEET (37 CFR 1.76)

Title of Invention	FLEXIBLE MOBILE DEVICE CONNECTIVITY TO AUTOMOTIVE SYSTEMS WITH USB HUBS

As the below named inventor, I hereby declare that:

This declaration is directed to:

☐ The attached application, or

☒ United States application or PCT international application number 15/268,728

filed on 19 September 2016.

The above-identified application was made or authorized to be made by me.

I believe that I am the original inventor or an original joint inventor of a claimed invention in the application.

I hereby acknowledge that any willful false statement made in this declaration is punishable under 18 U.S.C. 1001 by fine or imprisonment of not more than five (5) years, or both.

WARNING:

Petitioner/applicant is cautioned to avoid submitting personal information in documents filed in a patent application that may contribute to identity theft. Personal information such as social security numbers, bank account numbers, or credit card numbers (other than a check or credit card authorization form PTO-2038 submitted for payment purposes) is never required by the USPTO to support a petition or an application. If this type of personal information is included in documents submitted to the USPTO, petitioners/applicants should consider redacting such personal information from the documents before submitting them to the USPTO. Petitioner/applicant is advised that the record of a patent application is available to the public after publication of the application (unless a non-publication request in compliance with 37 CFR 1.213(a) is made in the application) or issuance of a patent. Furthermore, the record from an abandoned application may also be available to the public if the application is referenced in a published application or an issued patent (see 37 CFR 1.14). Checks and credit card authorization forms PTO-2038 submitted for payment purposes are not retained in the application file and therefore are not publicly available.

LEGAL NAME OF INVENTOR

Inventor: Robert M. Voto Date (Optional) :

Signature: Robert M. Voto

Note: An application data sheet (PTO/SB/14 or equivalent), including naming the entire inventive entity, must accompany this form or must have been previously filed. Use an additional PTO/AIA/01 form for each additional inventor.

This collection of information is required by 35 U.S.C. 115 and 37 CFR 1.63. The information is required to obtain or retain a benefit by the public which is to file (and by the USPTO to process) an application. Confidentiality is governed by 35 U.S.C. 122 and 37 CFR 1.11 and 1.14. This collection is estimated to take 1 minute to complete, including gathering, preparing, and submitting the completed application form to the USPTO. Time will vary depending upon the individual case. Any comments on the amount of time you require to complete this form and/or suggestions for reducing this burden, should be sent to the Chief Information Officer, U.S. Patent and Trademark Office, U.S. Department of Commerce, P.O. Box 1450, Alexandria, VA 22313-1450. DO NOT SEND FEES OR COMPLETED FORMS TO THIS ADDRESS. **SEND TO: Commissioner for Patents, P.O. Box 1450, Alexandria, VA 22313-1450.**

If you need assistance in completing the form, call 1-800-PTO-9199 and select option 2.

PTO/AIA/01 (06-12)
Approved for use through 01/31/2014. OMB 0651-0032
U.S. Patent and Trademark Office; U.S. DEPARTMENT OF COMMERCE
Under the Paperwork Reduction Act of 1995, no persons are required to respond to a collection of information unless it displays a valid OMB control number.

DECLARATION (37 CFR 1.63) FOR UTILITY OR DESIGN APPLICATION USING AN APPLICATION DATA SHEET (37 CFR 1.76)

Title of Invention	FLEXIBLE MOBILE DEVICE CONNECTIVITY TO AUTOMOTIVE SYSTEMS WITH USB HUBS

As the below named inventor, I hereby declare that:

This declaration is directed to:

☐ The attached application, or

☒ United States application or PCT international application number 15/268,728 filed on 19 September 2016.

The above-identified application was made or authorized to be made by me.

I believe that I am the original inventor or an original joint inventor of a claimed invention in the application.

I hereby acknowledge that any willful false statement made in this declaration is punishable under 18 U.S.C. 1001 by fine or imprisonment of not more than five (5) years, or both.

WARNING:

Petitioner/applicant is cautioned to avoid submitting personal information in documents filed in a patent application that may contribute to identity theft. Personal information such as social security numbers, bank account numbers, or credit card numbers (other than a check or credit card authorization form PTO-2038 submitted for payment purposes) is never required by the USPTO to support a petition or an application. If this type of personal information is included in documents submitted to the USPTO, petitioners/applicants should consider redacting such personal information from the documents before submitting them to the USPTO. Petitioner/applicant is advised that the record of a patent application is available to the public after publication of the application (unless a non-publication request in compliance with 37 CFR 1.213(a) is made in the application) or issuance of a patent. Furthermore, the record from an abandoned application may also be available to the public if the application is referenced in a published application or an issued patent (see 37 CFR 1.14). Checks and credit card authorization forms PTO-2038 submitted for payment purposes are not retained in the application file and therefore are not publicly available.

LEGAL NAME OF INVENTOR

Inventor: Shyambabu Yeda Date (Optional) :

Signature:

Note: An application data sheet (PTO/SB/14 or equivalent), including naming the entire inventive entity, must accompany this form or must have been previously filed. Use an additional PTO/AIA/01 form for each additional inventor.

This collection of information is required by 35 U.S.C. 115 and 37 CFR 1.63. The information is required to obtain or retain a benefit by the public which is to file (and by the USPTO to process) an application. Confidentiality is governed by 35 U.S.C. 122 and 37 CFR 1.11 and 1.14. This collection is estimated to take 1 minute to complete, including gathering, preparing, and submitting the completed application form to the USPTO. Time will vary depending upon the individual case. Any comments on the amount of time you require to complete this form and/or suggestions for reducing this burden, should be sent to the Chief Information Officer, U.S. Patent and Trademark Office, U.S. Department of Commerce, P.O. Box 1450, Alexandria, VA 22313-1450. DO NOT SEND FEES OR COMPLETED FORMS TO THIS ADDRESS. **SEND TO: Commissioner for Patents, P.O. Box 1450, Alexandria, VA 22313-1450.**

If you need assistance in completing the form, call 1-800-PTO-9199 and select option 2.

PTO/AIA/01 (06-12)
Approved for use through 01/31/2014. OMB 0651-0032
U.S. Patent and Trademark Office; U.S. DEPARTMENT OF COMMERCE
Under the Paperwork Reduction Act of 1995, no persons are required to respond to a collection of information unless it displays a valid OMB control number.

DECLARATION (37 CFR 1.63) FOR UTILITY OR DESIGN APPLICATION USING AN APPLICATION DATA SHEET (37 CFR 1.76)

Title of Invention	FLEXIBLE MOBILE DEVICE CONNECTIVITY TO AUTOMOTIVE SYSTEMS WITH USB HUBS

As the below named inventor, I hereby declare that:

This declaration is directed to:

☐ The attached application, or

☒ United States application or PCT international application number 15/268,728

filed on 19 September 2016.

The above-identified application was made or authorized to be made by me.

I believe that I am the original inventor or an original joint inventor of a claimed invention in the application.

I hereby acknowledge that any willful false statement made in this declaration is punishable under 18 U.S.C. 1001 by fine or imprisonment of not more than five (5) years, or both.

WARNING:

Petitioner/applicant is cautioned to avoid submitting personal information in documents filed in a patent application that may contribute to identity theft. Personal information such as social security numbers, bank account numbers, or credit card numbers (other than a check or credit card authorization form PTO-2038 submitted for payment purposes) is never required by the USPTO to support a petition or an application. If this type of personal information is included in documents submitted to the USPTO, petitioners/applicants should consider redacting such personal information from the documents before submitting them to the USPTO. Petitioner/applicant is advised that the record of a patent application is available to the public after publication of the application (unless a non-publication request in compliance with 37 CFR 1.213(a) is made in the application) or issuance of a patent. Furthermore, the record from an abandoned application may also be available to the public if the application is referenced in a published application or an issued patent (see 37 CFR 1.14). Checks and credit card authorization forms PTO-2038 submitted for payment purposes are not retained in the application file and therefore are not publicly available.

LEGAL NAME OF INVENTOR

Inventor: Craig Petku Date (Optional) :

Signature:

Note: An application data sheet (PTO/SB/14 or equivalent), including naming the entire inventive entity, must accompany this form or must have been previously filed. Use an additional PTO/AIA/01 form for each additional inventor.

This collection of information is required by 35 U.S.C. 115 and 37 CFR 1.63. The information is required to obtain or retain a benefit by the public which is to file (and by the USPTO to process) an application. Confidentiality is governed by 35 U.S.C. 122 and 37 CFR 1.11 and 1.14. This collection is estimated to take 1 minute to complete, including gathering, preparing, and submitting the completed application form to the USPTO. Time will vary depending upon the individual case. Any comments on the amount of time you require to complete this form and/or suggestions for reducing this burden, should be sent to the Chief Information Officer, U.S. Patent and Trademark Office, U.S. Department of Commerce, P.O. Box 1450, Alexandria, VA 22313-1450. DO NOT SEND FEES OR COMPLETED FORMS TO THIS ADDRESS. **SEND TO: Commissioner for Patents, P.O. Box 1450, Alexandria, VA 22313-1450.**

If you need assistance in completing the form, call 1-800-PTO-9199 and select option 2.

Electronic Acknowledgement Receipt

EFS ID:	27350602
Application Number:	15268728
International Application Number:	
Confirmation Number:	4506
Title of Invention:	FLEXIBLE MOBILE DEVICE CONNECTIVITY TO AUTOMOTIVE SYSTEMS WITH UBS HUBS
First Named Inventor/Applicant Name:	Robert M. Voto
Customer Number:	22851
Filer:	Lawrence Dean Hazelton/Kandace Powell
Filer Authorized By:	Lawrence Dean Hazelton
Attorney Docket Number:	DP-322037 CON
Receipt Date:	28-OCT-2016
Filing Date:	19-SEP-2016
Time Stamp:	10:32:01
Application Type:	Utility under 35 USC 111(a)

Payment information:

Submitted with Payment	no

File Listing:

Document Number	Document Description	File Name	File Size(Bytes)/ Message Digest	Multi Part /.zip	Pages (if appl.)
1	Transmittal Letter	DP322037_CON_TRANS_LTR_DECLARATION.pdf	13351 c0bc342d61b8a655817eb9a8685c4cc177295aa8	no	1

Warnings:

Information:					
2	Power of Attorney	POA_DTI_aia0080.pdf	80534 e276e681fea6d37810674cde3d0ad78025a0e338	no	2
Warnings:					
Information:					
3	Assignee showing of ownership per 37 CFR 3.73	373c_DTI_aia0096.pdf	117967 48ca103c27a888f1f9256ecc2c7167c44c6fc38a	no	3
Warnings:					
Information:					
4	Oath or Declaration filed	DP322037CON_Declaration_Signed.pdf	174371 c8658a16e32bc04fd3d56e3b8d5efeabb80db008	no	3
Warnings:					
The page size in the PDF is too large. The pages should be 8.5 x 11 or A4. If this PDF is submitted, the pages will be resized upon entry into the Image File Wrapper and may affect subsequent processing					
Information:					
			Total Files Size (in bytes):	386223	

This Acknowledgement Receipt evidences receipt on the noted date by the USPTO of the indicated documents, characterized by the applicant, and including page counts, where applicable. It serves as evidence of receipt similar to a Post Card, as described in MPEP 503.

New Applications Under 35 U.S.C. 111
If a new application is being filed and the application includes the necessary components for a filing date (see 37 CFR 1.53(b)-(d) and MPEP 506), a Filing Receipt (37 CFR 1.54) will be issued in due course and the date shown on this Acknowledgement Receipt will establish the filing date of the application.

National Stage of an International Application under 35 U.S.C. 371
If a timely submission to enter the national stage of an international application is compliant with the conditions of 35 U.S.C. 371 and other applicable requirements a Form PCT/DO/EO/903 indicating acceptance of the application as a national stage submission under 35 U.S.C. 371 will be issued in addition to the Filing Receipt, in due course.

New International Application Filed with the USPTO as a Receiving Office
If a new international application is being filed and the international application includes the necessary components for an international filing date (see PCT Article 11 and MPEP 1810), a Notification of the International Application Number and of the International Filing Date (Form PCT/RO/105) will be issued in due course, subject to prescriptions concerning national security, and the date shown on this Acknowledgement Receipt will establish the international filing date of the application.

IN THE UNITED STATES PATENT AND TRADEMARK OFFICE

Appl. No.	:	15/268,728	Confirmation No. 4506
Applicant	:	Delphi Technologies, Inc.	
Inventors	:	Robert M. Voto, et al.	
Filed	:	09/19/2016	
TC/AU	:	2181	
Examiner	:	Earnest Unelus	
Docket No.	:	DP-322037 CON	
Title	:	Flexible Mobile Device Connectivity to Automotive Systems with USB Hubs	

RESPONSE TO INFORMATIONAL NOTICE TO APPLICANT

Dear Sirs:

This letter is in response to an Informational Notice to Applicant, sent September 30, 2016 for the above referenced patent application.

Enclosed is the executed declaration for inventors Robert M. Voto, Shyambabu Yeda, and Craig Petku.

A copy of the patent assignment signed by the inventors a power of attorney statement, and a statement under 37 CFR 3.73(c) is also included herewith.

Please charge any fees due to Deposit Account No. 50-0831, Delphi Technologies, Inc.

Respectfully submitted,

/Robert J. Myers/

Robert J. Myers – 69783
Delphi Technologies, Inc.
248-813-2512

UNITED STATES PATENT AND TRADEMARK OFFICE

UNITED STATES DEPARTMENT OF COMMERCE
United States Patent and Trademark Office
Address: COMMISSIONER FOR PATENTS
P.O. Box 1450
Alexandria, Virginia 22313-1450
www.uspto.gov

APPLICATION NUMBER	FILING OR 371(C) DATE	FIRST NAMED APPLICANT	ATTY. DOCKET NO./TITLE
15/268,728	09/19/2016	Robert M. Voto	DP-322037 CON

CONFIRMATION NO. 4506

22851
Delphi Technologies, Inc.
P.O. Box 5052
M/C 483-400-402
Troy, MI 48007-5052

POA ACCEPTANCE LETTER

OC000000087010171

Date Mailed: 11/07/2016

NOTICE OF ACCEPTANCE OF POWER OF ATTORNEY

This is in response to the Power of Attorney filed 10/28/2016.

The Power of Attorney in this application is accepted. Correspondence in this application will be mailed to the above address as provided by 37 CFR 1.33.

Questions about the contents of this notice and the requirements it sets forth should be directed to the Office of Data Management, Application Assistance Unit, at **(571) 272-4000** or **(571) 272-4200** or **1-888-786-0101**.

/afessehaye/

Microchip Ex. 1004, p. 127
Microchip v. Aptiv
IPR2024-00558

Doc Code: DIST.E.FILE Document Description: Electronic Terminal Disclaimer - Filed	PTO/SB/25 U.S. Patent and Trademark Office Department of Commerce

Electronic Petition Request	**TERMINAL DISCLAIMER TO OBVIATE A PROVISIONAL DOUBLE PATENTING REJECTION OVER A PENDING "REFERENCE" APPLICATION**
Application Number	15268728
Filing Date	19-Sep-2016
First Named Inventor	Robert Voto
Attorney Docket Number	DP-322037 CON
Title of Invention	FLEXIBLE MOBILE DEVICE CONNECTIVITY TO AUTOMOTIVE SYSTEMS WITH UBS HUBS

☒ Filing of terminal disclaimer does not obviate requirement for response under 37 CFR 1.111 to outstanding Office Action

☒ This electronic Terminal Disclaimer is not being used for a Joint Research Agreement.

Owner	Percent Interest
Delphi Technologies, Inc.	100%

The owner(s) of percent interest listed above in the instant application hereby disclaims, except as provided below, the terminal part of the statutory term of any patent granted on the instant application which would extend beyond the expiration date of the full statutory term of any patent granted on pending reference Application Number(s)

15257096 filed on 09/06/2016

as the term of any patent granted on said reference application may be shortened by any terminal disclaimer filed prior to the grant of any patent on the pending reference application. The owner hereby agrees that any patent so granted on the instant application shall be enforceable only for and during such period that it and any patent granted on the reference application are commonly owned. This agreement runs with any patent granted on the instant application and is binding upon the grantee, its successors or assigns.

In making the above disclaimer, the owner does not disclaim the terminal part of any patent granted on the instant application that would extend to the expiration date of the full statutory term of any patent granted on said reference application, "as the term of any patent granted on said reference application may be shortened by any terminal disclaimer filed prior to the grant of any patent on the pending reference application," in the event that any such patent granted on the pending reference application: expires for failure to pay a maintenance fee, is held unenforceable, is found invalid by a court of competent jurisdiction, is statutorily disclaimed in whole or terminally disclaimed under 37 CFR 1.321, has all claims canceled by a reexamination certificate, is reissued, or is in any manner terminated prior to the expiration of its full statutory term as shortened by any terminal disclaimer filed prior to its grant.

◉ Terminal disclaimer fee under 37 CFR 1.20(d) is included with Electronic Terminal Disclaimer request.

○	I certify, in accordance with 37 CFR 1.4(d)(4), that the terminal disclaimer fee under 37 CFR 1.20(d) required for this terminal disclaimer has already been paid in the above-identified application.

Applicant claims the following fee status:

○ Small Entity

○ Micro Entity

◉ Regular Undiscounted

I hereby declare that all statements made herein of my own knowledge are true and that all statements made on information and belief are believed to be true; and further that these statements were made with the knowledge that willful false statements and the like so made are punishable by fine or imprisonment, or both, under Section 1001 of Title 18 of the United States Code and that such willful false statements may jeopardize the validity of the application or any patent issued thereon.

THIS PORTION MUST BE COMPLETED BY THE SIGNATORY OR SIGNATORIES

I certify, in accordance with 37 CFR 1.4(d)(4) that I am:

◉ An attorney or agent registered to practice before the Patent and Trademark Office who is of record in this application

Registration Number 69783

○ A sole inventor

○ A joint inventor; I certify that I am authorized to sign this submission on behalf of all of the inventors as evidenced by the power of attorney in the application

○ A joint inventor; all of whom are signing this request

Signature	/Robert J. Myers/
Name	Robert J. Myers

*Statement under 37 CFR 3.73(b) is required if terminal disclaimer is signed by the assignee (owner).
Form PTO/SB/96 may be used for making this certification. See MPEP § 324.

Electronic Patent Application Fee Transmittal

Application Number:	15268728
Filing Date:	19-Sep-2016
Title of Invention:	FLEXIBLE MOBILE DEVICE CONNECTIVITY TO AUTOMOTIVE SYSTEMS WITH UBS HUBS
First Named Inventor/Applicant Name:	Robert M. Voto
Filer:	Robert James Myers
Attorney Docket Number:	DP-322037 CON

Filed as Large Entity

Filing Fees for Utility under 35 USC 111(a)

Description	Fee Code	Quantity	Amount	Sub-Total in USD($)
Basic Filing:				
STATUTORY OR TERMINAL DISCLAIMER	1814	1	160	160
Pages:				
Claims:				
Miscellaneous-Filing:				
Petition:				
Patent-Appeals-and-Interference:				
Post-Allowance-and-Post-Issuance:				

Description	Fee Code	Quantity	Amount	Sub-Total in USD($)
Extension-of-Time:				
Miscellaneous:				
			Total in USD ($)	**160**

Doc Code: DISQ.E.FILE
Document Description: Electronic Terminal Disclaimer – Approved

Application No.: 15268728

Filing Date: 19-Sep-2016

Applicant/Patent under Reexamination: Voto

Electronic Terminal Disclaimer filed on November 9, 2016

☒ APPROVED

This patent is subject to a terminal disclaimer

☐ DISAPPROVED

Approved/Disapproved by: Electronic Terminal Disclaimer automatically approved by EFS-Web

U.S. Patent and Trademark Office

Electronic Acknowledgement Receipt

EFS ID:	27460154
Application Number:	15268728
International Application Number:	
Confirmation Number:	4506
Title of Invention:	FLEXIBLE MOBILE DEVICE CONNECTIVITY TO AUTOMOTIVE SYSTEMS WITH UBS HUBS
First Named Inventor/Applicant Name:	Robert M. Voto
Customer Number:	22851
Filer:	Robert James Myers
Filer Authorized By:	
Attorney Docket Number:	DP-322037 CON
Receipt Date:	09-NOV-2016
Filing Date:	19-SEP-2016
Time Stamp:	14:07:02
Application Type:	Utility under 35 USC 111(a)

Payment information:

Submitted with Payment	yes
Payment Type	DA
Payment was successfully received in RAM	$160
RAM confirmation Number	111016INTEFSW00000310500831
Deposit Account	500831
Authorized User	Kandace Powell

The Director of the USPTO is hereby authorized to charge indicated fees and credit any overpayment as follows:

37 CFR 1.21 (Miscellaneous fees and charges)

File Listing:

Document Number	Document Description	File Name	File Size(Bytes)/ Message Digest	Multi Part /.zip	Pages (if appl.)
1	Electronic Terminal Disclaimer-Filed	eTerminal-Disclaimer.pdf	34156 e8b2d53cf2ad197e7c4ab996ef3ec20c25d8b065	no	2
Warnings:					
Information:					
2	Fee Worksheet (SB06)	fee-info.pdf	30697 b270c1cb47d26f7a06d456e375d430783724d086	no	2
Warnings:					
Information:					
		Total Files Size (in bytes):	64853		

This Acknowledgement Receipt evidences receipt on the noted date by the USPTO of the indicated documents, characterized by the applicant, and including page counts, where applicable. It serves as evidence of receipt similar to a Post Card, as described in MPEP 503.

<u>New Applications Under 35 U.S.C. 111</u>
If a new application is being filed and the application includes the necessary components for a filing date (see 37 CFR 1.53(b)-(d) and MPEP 506), a Filing Receipt (37 CFR 1.54) will be issued in due course and the date shown on this Acknowledgement Receipt will establish the filing date of the application.

<u>National Stage of an International Application under 35 U.S.C. 371</u>
If a timely submission to enter the national stage of an international application is compliant with the conditions of 35 U.S.C. 371 and other applicable requirements a Form PCT/DO/EO/903 indicating acceptance of the application as a national stage submission under 35 U.S.C. 371 will be issued in addition to the Filing Receipt, in due course.

<u>New International Application Filed with the USPTO as a Receiving Office</u>
If a new international application is being filed and the international application includes the necessary components for an international filing date (see PCT Article 11 and MPEP 1810), a Notification of the International Application Number and of the International Filing Date (Form PCT/RO/105) will be issued in due course, subject to prescriptions concerning national security, and the date shown on this Acknowledgement Receipt will establish the international filing date of the application.

PTO/SB/26 (08-08)
Approved for use through 09/30/2008. OMB 0651-0031
U.S. Patent and Trademark Office; U.S. DEPARTMENT OF COMMERCE
Under the Paperwork Reduction Act of 1995, no persons are required to respond to a collection of information unless it displays a valid OMB control number.

TERMINAL DISCLAIMER TO OBVIATE A DOUBLE PATENTING REJECTION OVER A "PRIOR" PATENT	Docket Number (Optional) DP-322037 CON

In re Application of: Robert M. Voto, et al.

Application No.: 15/268,728

Filed: 09-19-2016

For: FLEXIBLE MOBILE DEVICE CONNECTIVITY TO AUTOMOTIVE SYSTEMS WITH USB HUBS

The owner*, Delphi Technologies, Inc., of 100 percent interest in the instant application hereby disclaims, except as provided below, the terminal part of the statutory term of any patent granted on the instant application which would extend beyond the expiration date of the full statutory term **prior patent** No. 9,460,037 as the term of said prior patent is defined in 35 U.S.C. 154 and 173, and as the term of said **prior patent** is presently shortened by any terminal disclaimer. The owner hereby agrees that any patent so granted on the instant application shall be enforceable only for and during such period that it and the **prior patent** are commonly owned. This agreement runs with any patent granted on the instant application and is binding upon the grantee, its successors or assigns.

In making the above disclaimer, the owner does not disclaim the terminal part of the term of any patent granted on the instant application that would extend to the expiration date of the full statutory term as defined in 35 U.S.C. 154 and 173 of the **prior patent**, "as the term of said **prior patent** is presently shortened by any terminal disclaimer," in the event that said **prior patent** later:

expires for failure to pay a maintenance fee;
is held unenforceable;
is found invalid by a court of competent jurisdiction;
is statutorily disclaimed in whole or terminally disclaimed under 37 CFR 1.321;
has all claims canceled by a reexamination certificate;
is reissued; or
is in any manner terminated prior to the expiration of its full statutory term as presently shortened by any terminal disclaimer.

Check either box 1 or 2 below, if appropriate.

1. ☐ For submissions on behalf of a business/organization (e.g., corporation, partnership, university, government agency, etc.), the undersigned is empowered to act on behalf of the business/organization.

I hereby declare that all statements made herein of my own knowledge are true and that all statements made on information and belief are believed to be true; and further that these statements were made with the knowledge that willful false statements and the like so made are punishable by fine or imprisonment, or both, under Section 1001 of Title 18 of the United States Code and that such willful false statements may jeopardize the validity of the application or any patent issued thereon.

2. ☑ The undersigned is an attorney or agent of record. Reg. No. 69,783

/Robert J. Myers/ — Signature
11-09-2016 — Date

Robert J. Myers
Typed or printed name

248-813-2512
Telephone Number

☐ Terminal disclaimer fee under 37 CFR 1.20(d) included.

WARNING: Information on this form may become public. Credit card information should not be included on this form. Provide credit card information and authorization on PTO-2038.

*Statement under 37 CFR 3.73(b) is required if terminal disclaimer is signed by the assignee (owner).
Form PTO/SB/96 may be used for making this certification. See MPEP § 324.

This collection of information is required by 37 CFR 1.321. The information is required to obtain or retain a benefit by the public which is to file (and by the USPTO to process) an application. Confidentiality is governed by 35 U.S.C. 122 and 37 CFR 1.11 and 1.14. This collection is estimated to take 12 minutes to complete, including gathering, preparing, and submitting the completed application form to the USPTO. Time will vary depending upon the individual case. Any comments on the amount of time you require to complete this form and/or suggestions for reducing this burden, should be sent to the Chief Information Officer, U.S. Patent and Trademark Office, U.S. Department of Commerce, P.O. Box 1450, Alexandria, VA 22313-1450. DO NOT SEND FEES OR COMPLETED FORMS TO THIS ADDRESS. **SEND TO: Commissioner for Patents, P.O. Box 1450, Alexandria, VA 22313-1450.**

If you need assistance in completing the form, call 1-800-PTO-9199 and select option 2.

Privacy Act Statement

The **Privacy Act of 1974 (P.L. 93-579)** requires that you be given certain information in connection with your submission of the attached form related to a patent application or patent. Accordingly, pursuant to the requirements of the Act, please be advised that: (1) the general authority for the collection of this information is 35 U.S.C. 2(b)(2); (2) furnishing of the information solicited is voluntary; and (3) the principal purpose for which the information is used by the U.S. Patent and Trademark Office is to process and/or examine your submission related to a patent application or patent. If you do not furnish the requested information, the U.S. Patent and Trademark Office may not be able to process and/or examine your submission, which may result in termination of proceedings or abandonment of the application or expiration of the patent.

The information provided by you in this form will be subject to the following routine uses:

1. The information on this form will be treated confidentially to the extent allowed under the Freedom of Information Act (5 U.S.C. 552) and the Privacy Act (5 U.S.C 552a). Records from this system of records may be disclosed to the Department of Justice to determine whether disclosure of these records is required by the Freedom of Information Act.
2. A record from this system of records may be disclosed, as a routine use, in the course of presenting evidence to a court, magistrate, or administrative tribunal, including disclosures to opposing counsel in the course of settlement negotiations.
3. A record in this system of records may be disclosed, as a routine use, to a Member of Congress submitting a request involving an individual, to whom the record pertains, when the individual has requested assistance from the Member with respect to the subject matter of the record.
4. A record in this system of records may be disclosed, as a routine use, to a contractor of the Agency having need for the information in order to perform a contract. Recipients of information shall be required to comply with the requirements of the Privacy Act of 1974, as amended, pursuant to 5 U.S.C. 552a(m).
5. A record related to an International Application filed under the Patent Cooperation Treaty in this system of records may be disclosed, as a routine use, to the International Bureau of the World Intellectual Property Organization, pursuant to the Patent Cooperation Treaty.
6. A record in this system of records may be disclosed, as a routine use, to another federal agency for purposes of National Security review (35 U.S.C. 181) and for review pursuant to the Atomic Energy Act (42 U.S.C. 218(c)).
7. A record from this system of records may be disclosed, as a routine use, to the Administrator, General Services, or his/her designee, during an inspection of records conducted by GSA as part of that agency's responsibility to recommend improvements in records management practices and programs, under authority of 44 U.S.C. 2904 and 2906. Such disclosure shall be made in accordance with the GSA regulations governing inspection of records for this purpose, and any other relevant (*i.e.*, GSA or Commerce) directive. Such disclosure shall not be used to make determinations about individuals.
8. A record from this system of records may be disclosed, as a routine use, to the public after either publication of the application pursuant to 35 U.S.C. 122(b) or issuance of a patent pursuant to 35 U.S.C. 151. Further, a record may be disclosed, subject to the limitations of 37 CFR 1.14, as a routine use, to the public if the record was filed in an application which became abandoned or in which the proceedings were terminated and which application is referenced by either a published application, an application open to public inspection or an issued patent.
9. A record from this system of records may be disclosed, as a routine use, to a Federal, State, or local law enforcement agency, if the USPTO becomes aware of a violation or potential violation of law or regulation.

Application Number	Application/Control No.	Applicant(s)/Patent under Reexamination	
	15/268,728	VOTO ET AL.	

Document Code - DISQ	Internal Document – DO NOT MAIL

TERMINAL DISCLAIMER	☐ APPROVED	☒ DISAPPROVED
Date Filed : 13 October, 2016	**This patent is subject to a Terminal Disclaimer**	

Approved/Disapproved by:

/CRYSTAL QUEEN/

Technology Center: PLRC

Telephone: _____

The person who signed the terminal disclaimer is not the applicant, patentee or an attorney or agent of record. 37 CFR 1.321(a) and (b). (See FP 14.26.08)

(Note: PoA can be given to a customer number, wherein all practitioners listed under the customer number have PoA. given to a list of practitioners by registration number, the list may not comprise more than 10 practitioners or a separate paper signed by a 37 CFR I.33(b) party must be in the record identifying which of the practitioners, up to 10, are recognized as having PoA. If the applicant is a juristic entity (e.g., corporation), a representative of the applicant cannot sign the TD unless it is established that the representative is a party authorized to act on behalf of the applicant.)

Also resubmit Td with this paper, NO FEE is required.

Electronic Acknowledgement Receipt

EFS ID:	27460742
Application Number:	15268728
International Application Number:	
Confirmation Number:	4506
Title of Invention:	FLEXIBLE MOBILE DEVICE CONNECTIVITY TO AUTOMOTIVE SYSTEMS WITH UBS HUBS
First Named Inventor/Applicant Name:	Robert M. Voto
Customer Number:	22851
Filer:	Lawrence Dean Hazelton/Kandace Powell
Filer Authorized By:	Lawrence Dean Hazelton
Attorney Docket Number:	DP-322037 CON
Receipt Date:	09-NOV-2016
Filing Date:	19-SEP-2016
Time Stamp:	14:19:10
Application Type:	Utility under 35 USC 111(a)

Payment information:

Submitted with Payment	no

File Listing:

Document Number	Document Description	File Name	File Size(Bytes)/ Message Digest	Multi Part /.zip	Pages (if appl.)
1	Transmittal Letter	DP322037_Term_Disclaimer_09NO16.pdf	13649 7d629b6729bb1eab6e64f3726b2d4ab48961c0be	no	1

Warnings:

Information:					
2	Terminal Disclaimer Filed	DP322037_CON_09NOV16_sb0026.pdf	186490 2c72884d5c324eed72d88c481531d02e82e40fb3	no	3
Warnings:					
Information:					
		Total Files Size (in bytes):	200139		

This Acknowledgement Receipt evidences receipt on the noted date by the USPTO of the indicated documents, characterized by the applicant, and including page counts, where applicable. It serves as evidence of receipt similar to a Post Card, as described in MPEP 503.

<u>New Applications Under 35 U.S.C. 111</u>
If a new application is being filed and the application includes the necessary components for a filing date (see 37 CFR 1.53(b)-(d) and MPEP 506), a Filing Receipt (37 CFR 1.54) will be issued in due course and the date shown on this Acknowledgement Receipt will establish the filing date of the application.

<u>National Stage of an International Application under 35 U.S.C. 371</u>
If a timely submission to enter the national stage of an international application is compliant with the conditions of 35 U.S.C. 371 and other applicable requirements a Form PCT/DO/EO/903 indicating acceptance of the application as a national stage submission under 35 U.S.C. 371 will be issued in addition to the Filing Receipt, in due course.

<u>New International Application Filed with the USPTO as a Receiving Office</u>
If a new international application is being filed and the international application includes the necessary components for an international filing date (see PCT Article 11 and MPEP 1810), a Notification of the International Application Number and of the International Filing Date (Form PCT/RO/105) will be issued in due course, subject to prescriptions concerning national security, and the date shown on this Acknowledgement Receipt will establish the international filing date of the application.

IN THE UNITED STATES PATENT AND TRADEMARK OFFICE

Appl. No.	:	15/268,728	Confirmation No. 4506
Applicant	:	Delphi Technologies, Inc.	
Inventors	:	Robert M. Voto, et al.	
Filed	:	09/06/2016	
TC/AU	:	2181	
Examiner	:	Earnest Unelus	
Docket No.	:	DP-322037 CON	
Title	:	Flexible Mobile Device Connectivity to Automotive Systems with USB Hubs	

Transmittal Letter

Dear Sirs:

Attached is a Terminal Disclaimer (Form PTO/SB/26) for the above referenced application.

Please charge any fees due to Deposit Account No. 50-0831, Delphi Technologies, Inc.

Respectfully submitted,

/Robert J. Myers/

Robert J. Myers – 69783
Delphi Technologies, Inc.
248-813-2512

Application Number	Application/Control No.	Applicant(s)/Patent under Reexamination	
	15/268,728	VOTO ET AL.	

Document Code - DISQ	Internal Document – DO NOT MAIL

TERMINAL DISCLAIMER	☒ APPROVED	☐ DISAPPROVED
Date Filed : 09 November, 2016	This patent is subject to a Terminal Disclaimer	

Approved/Disapproved by:

/CRYSTAL QUEEN/

Technology Center: PLRC

Telephone: _____

U.S. Patent and Trademark Office

UNITED STATES PATENT AND TRADEMARK OFFICE

UNITED STATES DEPARTMENT OF COMMERCE
United States Patent and Trademark Office
Address: COMMISSIONER FOR PATENTS
P.O. Box 1450
Alexandria, Virginia 22313-1450
www.uspto.gov

NOTICE OF ALLOWANCE AND FEE(S) DUE

22851 7590 11/25/2016
Delphi Technologies, Inc.
P.O. Box 5052
M/C 483-400-402
Troy, MI 48007-5052

EXAMINER
UNELUS, ERNEST

ART UNIT	PAPER NUMBER
2181	

DATE MAILED: 11/25/2016

APPLICATION NO.	FILING DATE	FIRST NAMED INVENTOR	ATTORNEY DOCKET NO.	CONFIRMATION NO.
15/268,728	09/19/2016	Robert M. Voto	DP-322037 CON	4506

TITLE OF INVENTION: FLEXIBLE MOBILE DEVICE CONNECTIVITY TO AUTOMOTIVE SYSTEMS WITH UBS HUBS

APPLN. TYPE	ENTITY STATUS	ISSUE FEE DUE	PUBLICATION FEE DUE	PREV. PAID ISSUE FEE	TOTAL FEE(S) DUE	DATE DUE
nonprovisional	UNDISCOUNTED	$960	$0	$0	$960	02/27/2017

THE APPLICATION IDENTIFIED ABOVE HAS BEEN EXAMINED AND IS ALLOWED FOR ISSUANCE AS A PATENT. PROSECUTION ON THE MERITS IS CLOSED. THIS NOTICE OF ALLOWANCE IS NOT A GRANT OF PATENT RIGHTS. THIS APPLICATION IS SUBJECT TO WITHDRAWAL FROM ISSUE AT THE INITIATIVE OF THE OFFICE OR UPON PETITION BY THE APPLICANT. SEE 37 CFR 1.313 AND MPEP 1308.

THE ISSUE FEE AND PUBLICATION FEE (IF REQUIRED) MUST BE PAID WITHIN THREE MONTHS FROM THE MAILING DATE OF THIS NOTICE OR THIS APPLICATION SHALL BE REGARDED AS ABANDONED. THIS STATUTORY PERIOD CANNOT BE EXTENDED. SEE 35 U.S.C. 151. THE ISSUE FEE DUE INDICATED ABOVE DOES NOT REFLECT A CREDIT FOR ANY PREVIOUSLY PAID ISSUE FEE IN THIS APPLICATION. IF AN ISSUE FEE HAS PREVIOUSLY BEEN PAID IN THIS APPLICATION (AS SHOWN ABOVE), THE RETURN OF PART B OF THIS FORM WILL BE CONSIDERED A REQUEST TO REAPPLY THE PREVIOUSLY PAID ISSUE FEE TOWARD THE ISSUE FEE NOW DUE.

HOW TO REPLY TO THIS NOTICE:

I. Review the ENTITY STATUS shown above. If the ENTITY STATUS is shown as SMALL or MICRO, verify whether entitlement to that entity status still applies.

If the ENTITY STATUS is the same as shown above, pay the TOTAL FEE(S) DUE shown above.

If the ENTITY STATUS is changed from that shown above, on PART B - FEE(S) TRANSMITTAL, complete section number 5 titled "Change in Entity Status (from status indicated above)".

For purposes of this notice, small entity fees are 1/2 the amount of undiscounted fees, and micro entity fees are 1/2 the amount of small entity fees.

II. PART B - FEE(S) TRANSMITTAL, or its equivalent, must be completed and returned to the United States Patent and Trademark Office (USPTO) with your ISSUE FEE and PUBLICATION FEE (if required). If you are charging the fee(s) to your deposit account, section "4b" of Part B - Fee(s) Transmittal should be completed and an extra copy of the form should be submitted. If an equivalent of Part B is filed, a request to reapply a previously paid issue fee must be clearly made, and delays in processing may occur due to the difficulty in recognizing the paper as an equivalent of Part B.

III. All communications regarding this application must give the application number. Please direct all communications prior to issuance to Mail Stop ISSUE FEE unless advised to the contrary.

IMPORTANT REMINDER: Utility patents issuing on applications filed on or after Dec. 12, 1980 may require payment of maintenance fees. It is patentee's responsibility to ensure timely payment of maintenance fees when due.

PTOL-85 (Rev. 02/11)

Microchip Ex. 1004, p. 142
Microchip v. Aptiv
IPR2024-00558

PART B - FEE(S) TRANSMITTAL

Complete and send this form, together with applicable fee(s), to: Mail **Mail Stop ISSUE FEE**
Commissioner for Patents
P.O. Box 1450
Alexandria, Virginia 22313-1450
or Fax (571)-273-2885

INSTRUCTIONS: This form should be used for transmitting the ISSUE FEE and PUBLICATION FEE (if required). Blocks 1 through 5 should be completed where appropriate. All further correspondence including the Patent, advance orders and notification of maintenance fees will be mailed to the current correspondence address as indicated unless corrected below or directed otherwise in Block 1, by (a) specifying a new correspondence address; and/or (b) indicating a separate "FEE ADDRESS" for maintenance fee notifications.

CURRENT CORRESPONDENCE ADDRESS (Note: Use Block 1 for any change of address)

22851 7590 11/25/2016
Delphi Technologies, Inc.
P.O. Box 5052
M/C 483-400-402
Troy, MI 48007-5052

Note: A certificate of mailing can only be used for domestic mailings of the Fee(s) Transmittal. This certificate cannot be used for any other accompanying papers. Each additional paper, such as an assignment or formal drawing, must have its own certificate of mailing or transmission.

Certificate of Mailing or Transmission
I hereby certify that this Fee(s) Transmittal is being deposited with the United States Postal Service with sufficient postage for first class mail in an envelope addressed to the Mail Stop ISSUE FEE address above, or being facsimile transmitted to the USPTO (571) 273-2885, on the date indicated below.

(Depositor's name)
(Signature)
(Date)

APPLICATION NO.	FILING DATE	FIRST NAMED INVENTOR	ATTORNEY DOCKET NO.	CONFIRMATION NO.
15/268,728	09/19/2016	Robert M. Voto	DP-322037 CON	4506

TITLE OF INVENTION: FLEXIBLE MOBILE DEVICE CONNECTIVITY TO AUTOMOTIVE SYSTEMS WITH UBS HUBS

APPLN. TYPE	ENTITY STATUS	ISSUE FEE DUE	PUBLICATION FEE DUE	PREV. PAID ISSUE FEE	TOTAL FEE(S) DUE	DATE DUE
nonprovisional	UNDISCOUNTED	$960	$0	$0	$960	02/27/2017

EXAMINER	ART UNIT	CLASS-SUBCLASS
UNELUS, ERNEST	2181	710-014000

1. Change of correspondence address or indication of "Fee Address" (37 CFR 1.363).
❑ Change of correspondence address (or Change of Correspondence Address form PTO/SB/122) attached.
❑ "Fee Address" indication (or "Fee Address" Indication form PTO/SB/47; Rev 03-02 or more recent) attached. **Use of a Customer Number is required.**

2. For printing on the patent front page, list
(1) The names of up to 3 registered patent attorneys or agents OR, alternatively,
(2) The name of a single firm (having as a member a registered attorney or agent) and the names of up to 2 registered patent attorneys or agents. If no name is listed, no name will be printed.
1_____
2_____
3_____

3. ASSIGNEE NAME AND RESIDENCE DATA TO BE PRINTED ON THE PATENT (print or type)

PLEASE NOTE: Unless an assignee is identified below, no assignee data will appear on the patent. If an assignee is identified below, the document has been filed for recordation as set forth in 37 CFR 3.11. Completion of this form is NOT a substitute for filing an assignment.

(A) NAME OF ASSIGNEE (B) RESIDENCE: (CITY and STATE OR COUNTRY)

Please check the appropriate assignee category or categories (will not be printed on the patent) : ❑ Individual ❑ Corporation or other private group entity ❑ Government

4a. The following fee(s) are submitted:
❑ Issue Fee
❑ Publication Fee (No small entity discount permitted)
❑ Advance Order - # of Copies _____

4b. Payment of Fee(s): **(Please first reapply any previously paid issue fee shown above)**
❑ A check is enclosed.
❑ Payment by credit card. Form PTO-2038 is attached.
❑ The director is hereby authorized to charge the required fee(s), any deficiency, or credits any overpayment, to Deposit Account Number _____ (enclose an extra copy of this form).

5. **Change in Entity Status** (from status indicated above)
❑ Applicant certifying micro entity status. See 37 CFR 1.29 — NOTE: Absent a valid certification of Micro Entity Status (see forms PTO/SB/15A and 15B), issue fee payment in the micro entity amount will not be accepted at the risk of application abandonment.
❑ Applicant asserting small entity status. See 37 CFR 1.27 — NOTE: If the application was previously under micro entity status, checking this box will be taken to be a notification of loss of entitlement to micro entity status.
❑ Applicant changing to regular undiscounted fee status. — NOTE: Checking this box will be taken to be a notification of loss of entitlement to small or micro entity status, as applicable.

NOTE: This form must be signed in accordance with 37 CFR 1.31 and 1.33. See 37 CFR 1.4 for signature requirements and certifications.

Authorized Signature _____ Date _____

Typed or printed name _____ Registration No. _____

PTOL-85 Part B (10-13) Approved for use through 10/31/2013. OMB 0651-0033 U.S. Patent and Trademark Office; U.S. DEPARTMENT OF COMMERCE

Microchip Ex. 1004, p. 143
Microchip v. Aptiv
IPR2024-00558

UNITED STATES PATENT AND TRADEMARK OFFICE

UNITED STATES DEPARTMENT OF COMMERCE
United States Patent and Trademark Office
Address: COMMISSIONER FOR PATENTS
P.O. Box 1450
Alexandria, Virginia 22313-1450
www.uspto.gov

APPLICATION NO.	FILING DATE	FIRST NAMED INVENTOR	ATTORNEY DOCKET NO.	CONFIRMATION NO.
15/268,728	09/19/2016	Robert M. Voto	DP-322037 CON	4506

22851 7590 11/25/2016
Delphi Technologies, Inc.
P.O. Box 5052
M/C 483-400-402
Troy, MI 48007-5052

EXAMINER
UNELUS, ERNEST

ART UNIT	PAPER NUMBER
2181	

DATE MAILED: 11/25/2016

Determination of Patent Term Adjustment under 35 U.S.C. 154 (b)
(Applications filed on or after May 29, 2000)

The Office has discontinued providing a Patent Term Adjustment (PTA) calculation with the Notice of Allowance.

Section 1(h)(2) of the AIA Technical Corrections Act amended 35 U.S.C. 154(b)(3)(B)(i) to eliminate the requirement that the Office provide a patent term adjustment determination with the notice of allowance. See Revisions to Patent Term Adjustment, 78 Fed. Reg. 19416, 19417 (Apr. 1, 2013). Therefore, the Office is no longer providing an initial patent term adjustment determination with the notice of allowance. The Office will continue to provide a patent term adjustment determination with the Issue Notification Letter that is mailed to applicant approximately three weeks prior to the issue date of the patent, and will include the patent term adjustment on the patent. Any request for reconsideration of the patent term adjustment determination (or reinstatement of patent term adjustment) should follow the process outlined in 37 CFR 1.705.

Any questions regarding the Patent Term Extension or Adjustment determination should be directed to the Office of Patent Legal Administration at (571)-272-7702. Questions relating to issue and publication fee payments should be directed to the Customer Service Center of the Office of Patent Publication at 1-(888)-786-0101 or (571)-272-4200.

PTOL-85 (Rev. 02/11)

Microchip Ex. 1004, p. 144
Microchip v. Aptiv
IPR2024-00558

OMB Clearance and PRA Burden Statement for PTOL-85 Part B

The Paperwork Reduction Act (PRA) of 1995 requires Federal agencies to obtain Office of Management and Budget approval before requesting most types of information from the public. When OMB approves an agency request to collect information from the public, OMB (i) provides a valid OMB Control Number and expiration date for the agency to display on the instrument that will be used to collect the information and (ii) requires the agency to inform the public about the OMB Control Number's legal significance in accordance with 5 CFR 1320.5(b).

The information collected by PTOL-85 Part B is required by 37 CFR 1.311. The information is required to obtain or retain a benefit by the public which is to file (and by the USPTO to process) an application. Confidentiality is governed by 35 U.S.C. 122 and 37 CFR 1.14. This collection is estimated to take 12 minutes to complete, including gathering, preparing, and submitting the completed application form to the USPTO. Time will vary depending upon the individual case. Any comments on the amount of time you require to complete this form and/or suggestions for reducing this burden, should be sent to the Chief Information Officer, U.S. Patent and Trademark Office, U.S. Department of Commerce, P.O. Box 1450, Alexandria, Virginia 22313-1450. DO NOT SEND FEES OR COMPLETED FORMS TO THIS ADDRESS. SEND TO: Commissioner for Patents, P.O. Box 1450, Alexandria, Virginia 22313-1450. Under the Paperwork Reduction Act of 1995, no persons are required to respond to a collection of information unless it displays a valid OMB control number.

Privacy Act Statement

The Privacy Act of 1974 (P.L. 93-579) requires that you be given certain information in connection with your submission of the attached form related to a patent application or patent. Accordingly, pursuant to the requirements of the Act, please be advised that: (1) the general authority for the collection of this information is 35 U.S.C. 2(b)(2); (2) furnishing of the information solicited is voluntary; and (3) the principal purpose for which the information is used by the U.S. Patent and Trademark Office is to process and/or examine your submission related to a patent application or patent. If you do not furnish the requested information, the U.S. Patent and Trademark Office may not be able to process and/or examine your submission, which may result in termination of proceedings or abandonment of the application or expiration of the patent.

The information provided by you in this form will be subject to the following routine uses:

1. The information on this form will be treated confidentially to the extent allowed under the Freedom of Information Act (5 U.S.C. 552) and the Privacy Act (5 U.S.C 552a). Records from this system of records may be disclosed to the Department of Justice to determine whether disclosure of these records is required by the Freedom of Information Act.
2. A record from this system of records may be disclosed, as a routine use, in the course of presenting evidence to a court, magistrate, or administrative tribunal, including disclosures to opposing counsel in the course of settlement negotiations.
3. A record in this system of records may be disclosed, as a routine use, to a Member of Congress submitting a request involving an individual, to whom the record pertains, when the individual has requested assistance from the Member with respect to the subject matter of the record.
4. A record in this system of records may be disclosed, as a routine use, to a contractor of the Agency having need for the information in order to perform a contract. Recipients of information shall be required to comply with the requirements of the Privacy Act of 1974, as amended, pursuant to 5 U.S.C. 552a(m).
5. A record related to an International Application filed under the Patent Cooperation Treaty in this system of records may be disclosed, as a routine use, to the International Bureau of the World Intellectual Property Organization, pursuant to the Patent Cooperation Treaty.
6. A record in this system of records may be disclosed, as a routine use, to another federal agency for purposes of National Security review (35 U.S.C. 181) and for review pursuant to the Atomic Energy Act (42 U.S.C. 218(c)).
7. A record from this system of records may be disclosed, as a routine use, to the Administrator, General Services, or his/her designee, during an inspection of records conducted by GSA as part of that agency's responsibility to recommend improvements in records management practices and programs, under authority of 44 U.S.C. 2904 and 2906. Such disclosure shall be made in accordance with the GSA regulations governing inspection of records for this purpose, and any other relevant (i.e., GSA or Commerce) directive. Such disclosure shall not be used to make determinations about individuals.
8. A record from this system of records may be disclosed, as a routine use, to the public after either publication of the application pursuant to 35 U.S.C. 122(b) or issuance of a patent pursuant to 35 U.S.C. 151. Further, a record may be disclosed, subject to the limitations of 37 CFR 1.14, as a routine use, to the public if the record was filed in an application which became abandoned or in which the proceedings were terminated and which application is referenced by either a published application, an application open to public inspection or an issued patent.
9. A record from this system of records may be disclosed, as a routine use, to a Federal, State, or local law enforcement agency, if the USPTO becomes aware of a violation or potential violation of law or regulation.

Notice of Allowability	Application No. 15/268,728	Applicant(s) VOTO ET AL.	
	Examiner ERNEST UNELUS	Art Unit 2181	AIA (First Inventor to File) Status Yes

-- The MAILING DATE of this communication appears on the cover sheet with the correspondence address--

All claims being allowable, PROSECUTION ON THE MERITS IS (OR REMAINS) CLOSED in this application. If not included herewith (or previously mailed), a Notice of Allowance (PTOL-85) or other appropriate communication will be mailed in due course. **THIS NOTICE OF ALLOWABILITY IS NOT A GRANT OF PATENT RIGHTS.** This application is subject to withdrawal from issue at the initiative of the Office or upon petition by the applicant. See 37 CFR 1.313 and MPEP 1308.

1. ☒ This communication is responsive to *Examiner's amendment*.
   ☐ A declaration(s)/affidavit(s) under **37 CFR 1.130(b)** was/were filed on_____.
2. ☐ An election was made by the applicant in response to a restriction requirement set forth during the interview on _____; the restriction requirement and election have been incorporated into this action.
3. ☒ The allowed claim(s) is/are *1-14 and 25-30, renumbered as 1-20*. As a result of the allowed claim(s), you may be eligible to benefit from the **Patent Prosecution Highway** program at a participating intellectual property office for the corresponding application. For more information, please see http://www.uspto.gov/patents/init_events/pph/index.jsp or send an inquiry to PPHfeedback@uspto.gov.
4. ☐ Acknowledgment is made of a claim for foreign priority under 35 U.S.C. § 119(a)-(d) or (f).

   Certified copies:

   a) ☐ All b) ☐ Some *c) ☐ None of the:
   1. ☐ Certified copies of the priority documents have been received.
   2. ☐ Certified copies of the priority documents have been received in Application No. _____ .
   3. ☐ Copies of the certified copies of the priority documents have been received in this national stage application from the International Bureau (PCT Rule 17.2(a)).

   * Certified copies not received: _____.

Applicant has THREE MONTHS FROM THE "MAILING DATE" of this communication to file a reply complying with the requirements noted below. Failure to timely comply will result in ABANDONMENT of this application.
THIS THREE-MONTH PERIOD IS NOT EXTENDABLE.

5. ☐ CORRECTED DRAWINGS (as "replacement sheets") must be submitted.
   ☐ including changes required by the attached Examiner's Amendment / Comment or in the Office action of Paper No./Mail Date _____.

   Identifying indicia such as the application number (see 37 CFR 1.84(c)) should be written on the drawings in the front (not the back) of each sheet. Replacement sheet(s) should be labeled as such in the header according to 37 CFR 1.121(d).
6. ☐ DEPOSIT OF and/or INFORMATION about the deposit of BIOLOGICAL MATERIAL must be submitted. Note the attached Examiner's comment regarding REQUIREMENT FOR THE DEPOSIT OF BIOLOGICAL MATERIAL.

Attachment(s)

1. ☒ Notice of References Cited (PTO-892)
2. ☒ Information Disclosure Statements (PTO/SB/08), Paper No./Mail Date 10/24/2016
3. ☐ Examiner's Comment Regarding Requirement for Deposit of Biological Material
4. ☐ Interview Summary (PTO-413), Paper No./Mail Date ____ .
5. ☒ Examiner's Amendment/Comment
6. ☒ Examiner's Statement of Reasons for Allowance
7. ☐ Other _____.

/ERNEST UNELUS/
Primary Examiner, Art Unit 2181

Microchip Ex. 1004, p. 146
Microchip v. Aptiv
IPR2024-00558

DETAILED ACTION

The present application, filed on or after March 16, 2013, is being examined under the first inventor to file provisions of the AIA.

EXAMINER'S AMENDMENT

An examiner's amendment to the record appears below. Should the changes and/or additions be unacceptable to applicant, an amendment may be filed as provided by 37 CFR 1.312. To ensure consideration of such an amendment, it MUST be submitted no later than the payment of the issue fee.

Authorization for this examiner's amendment was given in a telephone interview with Mr. Robert J. Myers (Reg. No. 69,783) on October 13, 2016. The examiner proposed amendments to better place the application in condition for allowance, particularly adding the limitation that prior arts fail to teach. Mr. Myers agreed.

The application has been amended as follows:

Listing of Claims:

1. (Currently amended) A Universal Serial Bus (USB) hub module, comprising:

    a first USB port configured to be connected to a USB host;

    a second USB port configured to be connected to a consumer device;

    a USB hub interconnected to the first USB port and the second USB port;

    a USB bridge interconnected to the USB hub; and

a USB routing switch interconnected to the USB bridge, the USB hub, and the second USB port, wherein the USB routing switch is configured to connect the second USB port to the first USB port through the USB bridge, thereby ~~supporting~~ providing bidirectional initiation of communication between the USB host and the consumer device when the consumer device connected to the second USB port is in a USB host mode and wherein the USB routing switch is configured to connect the second USB port directly to the first USB port through the USB hub, thereby ~~supporting~~ only responding to communication initiated by the USB Host when the consumer device connected to the second USB port is in a USB device mode.

2. (Currently amended) The USB hub module according to claim 1, wherein the USB routing switch is configured to connect the second USB port to the first USB port through the USB bridge thereby ~~supporting~~ providing bidirectional initiation of communication between the USB host and the consumer device when the consumer device connected to the second USB port is in the USB host mode and wherein the USB routing switch is configured to simultaneously connect another second USB port directly to the first USB port through the USB hub, thereby ~~supporting~~ only responding to communication initiated by the USB Host when another consumer device connected to the another second USB port is in the USB device mode.

3. (Original) The USB hub module according to claim 1, wherein the USB hub module is configured to recognize whether the consumer device connected to the second USB port is in the USB host mode or in the USB device mode and control the USB routing switch accordingly.

4. (Original) The USB hub module according to claim 1, wherein the USB hub module is configured to dynamically switch operation of the second USB port between supporting the consumer device in the USB device mode or the USB host mode.

5. (Original) The USB hub module according to claim 1, wherein the USB routing switch is configured to connect the consumer device to either the USB bridge or the USB hub based on whether the consumer device attached to the second USB port is configured to act as the USB host or a USB device.

6. (Original) The USB hub module according to claim 1, wherein the USB bridge is configured to control the USB routing switch.

7. (Currently amended) An integrated circuit, comprising:

a USB hub configured to be interconnected to a first USB port connected to a USB host and a second USB port connected to a consumer device;

a USB bridge interconnected to the USB hub; and

a USB routing switch interconnected to the USB bridge, the USB hub, and the second USB port, wherein the USB routing switch is configured to connect the second USB port to the first USB port through the USB bridge thereby ~~supporting~~ providing bidirectional initiation of communication between the USB host and the consumer device when the consumer device connected to the second USB port is in a USB host mode and wherein the USB routing switch is configured to connect the second USB port directly to the first USB port through the USB hub, thereby ~~supporting~~ only responding to communication initiated by the USB Host when the consumer device connected to the second USB port is in a USB device mode.

8. (Currently amended) The integrated circuit according to claim 7, wherein the USB routing switch is configured to connect the second USB port to the first USB port through the USB bridge thereby ~~supporting~~ providing bidirectional initiation of communication between the USB host and the consumer device when the consumer device connected to the second USB port is in the USB host mode and wherein the USB routing switch is configured to simultaneously connect another second USB port directly to the first USB port through the USB hub, thereby ~~supporting~~ only responding to communication initiated by the USB Host when another consumer device connected to the another second USB port is in the USB device mode.

9. (Original) The integrated circuit according to claim 7, wherein the integrated circuit is configured to recognize whether the consumer device connected to the second USB port is in the USB host mode or in the USB device mode and control the USB routing switch accordingly.

10. (Original) The integrated circuit according to claim 7, wherein the integrated circuit is configured to dynamically switch operation of the second USB port between supporting the consumer device in the USB device mode or the USB host mode.

11. (Original) The integrated circuit according to claim 7, wherein the USB routing switch is configured to connect the consumer device to either the USB bridge or the USB hub based on whether the consumer device attached to the second USB port is configured to act as the USB host or a USB device.

12. (Original) The integrated circuit according to claim 7, wherein the USB bridge is configured to control the USB routing switch.

13. (Currently amended) A method of operating a USB hub module having a USB hub configured to be interconnected to a first USB port connected to a USB host and a second USB port connected to a consumer device, a USB bridge interconnected to the USB hub, and a USB routing switch interconnected to the USB bridge, the USB hub, and the second USB port, said method comprising the steps of:

determining ~~if~~ when the consumer device is operating in a USB host mode ~~or~~ and in a USB device mode;

connecting the consumer device via the second USB port to the USB hub via the first USB port through the USB routing switch and the USB bridge, thereby providing bidirectional initiation of communication between the USB host and the consumer device when the consumer device is determined to be in the USB host mode; and

connecting the consumer device via the second USB port to the USB hub via the first USB port through the USB routing switch and the USB hub thereby bypassing the USB bridge to only respond to communication initiated by the USB host when the consumer device is determined to be in the USB device mode.

14. (Currently amended) The method according to claim 13, wherein the step of determining ~~if~~ when the consumer device is operating in the USB host mode or in the USB device mode is performed by the USB routing switch.

15. – 24. (Cancelled)

25. (Currently amended) A Universal Serial Bus (USB) connectivity module, comprising:

a first USB port;

a second USB port;

a USB host-to-host bridge connected to said first USB port;

a USB routing switch connected to said first USB port, said second USB port and said USB host-to-host bridge, wherein said USB routing switch is configured to provide a communication link between said first USB port and said second USB port through said USB host~~-to host bridge~~-to-host bridge, thereby providing bidirectional initiation of communication between the USB host and the consumer device when a first consumer device connected to said second USB port is operating in a USB host mode and wherein said USB routing switch is configured to provide another communication link between said first USB port and said second USB port that bypasses said USB host-to-host bridge, thereby only responding to communication initiated by the USB host when the first consumer device connected to said second USB port is operating in a USB device mode.

26. (Currently amended) The USB connectivity module according to claim 25, further comprising a third USB port, wherein said USB routing switch is configured to provide a first communication link between said first USB port and said second USB port through said host~~-to host bridge~~-to-host bridge, thereby providing bidirectional initiation of communication between the USB host and the consumer device when the first consumer device connected to said second USB port is operating in the USB host mode and wherein said USB routing switch is configured to provide simultaneously provide a second communication link between said first USB port and said third USB port that bypasses said USB host-to-host bridge, thereby only responding to communication initiated by the USB Host when a second consumer device connected to said third USB port is operating in the USB device mode.

27. (Currently amended) The USB connectivity module according to claim 25, further comprising a third USB port, wherein said USB routing switch is further connected to the third USB port, wherein said USB routing switch is configured to provide a first communication link between said first USB port and said second USB port through said USB host~~-to host bridge~~ -to-host bridge, thereby providing bidirectional initiation of communication between the USB host and the consumer device when the first consumer device connected to said second USB port is operating in the USB host mode, and wherein said USB routing switch is configured to provide a second communication link between said first USB port and said third USB port that bypasses said USB host-to-host bridge, thereby only responding to communication initiated by the USB host when a second consumer device connected to said third USB port is operating in the USB device mode without interrupting the first communication link between said first USB port and said second USB port.

28. (Currently amended) A communication system, comprising:

a USB hub including a first USB port and a second USB port;

a central vehicle microcontroller connected to said first USB port;

a first consumer device connected to said second USB port;

a USB host-to-host bridge connected to said first USB port;

a USB routing switch providing a first communication path between said second USB port and said USB host-to-host bridge and a second communication path between said second USB port and said first USB port that bypasses said USB host-to-host bridge, wherein said USB routing switch ~~is adapted to enable~~ connects said first communication path when the first consumer device is connected to said second USB port and is operating in a USB host mode,

thereby providing bidirectional initiation of communication between the USB host and the consumer device and wherein said USB routing switch ~~is adapted to enable~~ connects said second communication path, thereby only responding to communication initiated by the USB host when the first consumer device is connected to said second USB port and is operating in a USB device mode.

29. (Currently amended) The communication system according to claim 28, further comprising a second consumer device, wherein the USB hub includes a third USB port and wherein the USB routing switch ~~is~~ further ~~adapted to enable~~ connects a third communication path between said third USB port and said first USB port that bypasses said USB host-to-host bridge, thereby only responding to communication initiated by the USB Host when the second consumer device is connected to said third USB port and is operating in the USB device mode.

30. (Original) The communication system according to claim 29, wherein said USB routing switch is configured to simultaneously provide the second communication path between said first USB port and said third USB port without interrupting the first communication path between said first USB port and said second USB port.

ALLOWABLE SUBJECT MATTER

The primary reason for allowance of claims 1, 7, 13, 25, and 28 in the instant application is that prior arts don't teach a peripheral device to communicate with a USB hub bi-directionally in a first mode and to communicate with the hub only uni-

directionally in a second mode wherein the device is only able to respond, and wherein a respective path between the device and host is taken for each mode.

The remaining claims 2-6, 8-12, 14, 26-27 and 29-30 are allowed by virtue of their dependencies on the independent claim. Hence, the examiner has allowed claims 1-14 and 25-30.

Any comments considered necessary by applicant must be submitted no later than the payment of the issue fee and, to avoid processing delays, should preferably accompany the issue fee. Such submissions should be clearly labeled "Comments on Statement of Reasons for Allowance."

CLOSING COMMENTS

Conclusion

a. STATUS OF CLAIMS IN THE APPLICATION

The following is a summary of the treatment and status of all claims in the application as recommended by **M.P.E.P. 707.07(i)**:

a(1) CLAIMS ALOWED IN THE APPLICATION

Per the instant office action, claims 1-14 and 25-30 have been allowed.

b. DIRECTION OF FUTURE CORRESPONDENCES

Any inquiry concerning this communication or earlier communications from the examiner should be directed to Ernest Unelus whose telephone number is (571) 272-8596. The examiner can normally be reached on Monday to Friday 9:00 AM to 5:00 PM.

IMPORTANT NOTE

If attempts to reach the above noted Examiner by telephone are unsuccessful, the Examiner's supervisor, Mr. Idriss Alrobaye, can be reached at the following telephone number: Area Code (571) 270-1023.

The fax phone number for the organization where this application or proceeding is assigned is 571-273-8300. Information regarding the status of an application may be obtained from the Patent Application Information Retrieval (PAIR) system. Status information for published applications may be obtained from either Private PAIR or Public PAIR. Status information for unpublished applications is available through Private PAIR only. For more information about the PMR system, see her//pair-direct.uspto.gov. Should you have questions on access to the Private PAIR system, contact the Electronic Business Center (EBC) at 866-217- 91 97 (toll-free).

/Ernest Unelus/
Primary Examiner
Art Unit 2181

Notice of References Cited	Application/Control No. 15/268,728	Applicant(s)/Patent Under Reexamination VOTO ET AL.	
	Examiner ERNEST UNELUS	Art Unit 2181	Page 1 of 1

U.S. PATENT DOCUMENTS

*		Document Number Country Code-Number-Kind Code	Date MM-YYYY	Name	CPC Classification	US Classification
*	A	US-2011/0208892 A1	08-2011	Meyers; Christopher Michael	G06F13/4226	710/313
*	B	US-2011/0208891 A1	08-2011	Meyers; Christopher Michael	G06F13/385	710/313
*	C	US-2016/0132448 A1	05-2016	MAUNG; Win Naing	G06F13/366	710/104
	D	US-				
	E	US-				
	F	US-				
	G	US-				
	H	US-				
	I	US-				
	J	US-				
	K	US-				
	L	US-				
	M	US-				

FOREIGN PATENT DOCUMENTS

*		Document Number Country Code-Number-Kind Code	Date MM-YYYY	Country	Name	CPC Classification
	N					
	O					
	P					
	Q					
	R					
	S					
	T					

NON-PATENT DOCUMENTS

*		Include as applicable: Author, Title Date, Publisher, Edition or Volume, Pertinent Pages)
	U	
	V	
	W	
	X	

*A copy of this reference is not being furnished with this Office action. (See MPEP § 707.05(a).)
Dates in MM-YYYY format are publication dates. Classifications may be US or foreign.

Microchip Ex. 1004, p. 157
Microchip v. Aptiv
IPR2024-00558

Search Notes	Application/Control No.	Applicant(s)/Patent Under Reexamination
	15268728	VOTO ET AL.
	Examiner	**Art Unit**
	ERNEST UNELUS	2181

CPC- SEARCHED

Symbol	Date	Examiner
G06F 13/4022, 4045, 385, 387, 366, 4068, 4282, 4027; G06F 2213/0042	10/13/2016	E.U

CPC COMBINATION SETS - SEARCHED

Symbol	Date	Examiner

US CLASSIFICATION SEARCHED

Class	Subclass	Date	Examiner

SEARCH NOTES

Search Notes	Date	Examiner
EAST search: US-PGPUB; USPAT; USOCR; EPO; JPO; DERWENT	10/13/2016	E.U
Inventor search utilizing eDAN and EAST	10/13/2016	E.U
CPC search of G06F 13/4022, 4045, 385, 387, 366, 4068, 4282, 4027; G06F 2213/0042	10/13/2016	E.U

INTERFERENCE SEARCH

US Class/ CPC Symbol	US Subclass / CPC Group	Date	Examiner
G06F	4022, 4045	10/13/2016	E.U

Microchip Ex. 1004, p. 158
Microchip v. Aptiv
IPR2024-00558

Issue Classification	Application/Control No.	Applicant(s)/Patent Under Reexamination
	15268728	VOTO ET AL.
	Examiner	**Art Unit**
	ERNEST UNELUS	2181

CPC						
Symbol					**Type**	**Version**
G06F		13	/	4022	F	2013-01-01
G06F		13	/	385	I	2013-01-01
G06F		13	/	4045	A	2013-01-01
			/			
			/			
			/			
			/			
			/			
			/			
			/			
			/			
			/			
			/			
			/			
			/			

CPC Combination Sets								
Symbol					**Type**	**Set**	**Ranking**	**Version**
			/					
			/					

NONE (Assistant Examiner)	(Date)	**Total Claims Allowed:** 20	
/ERNEST UNELUS/ Primary Examiner.Art Unit 2181 (Primary Examiner)	10/14/2016 (Date)	O.G. Print Claim(s) 1	O.G. Print Figure 6

U.S. Patent and Trademark Office

Part of Paper No. 20161013

Issue Classification	Application/Control No.	Applicant(s)/Patent Under Reexamination
	15268728	VOTO ET AL.
	Examiner	**Art Unit**
	ERNEST UNELUS	2181

US ORIGINAL CLASSIFICATION		INTERNATIONAL CLASSIFICATION	
CLASS	SUBCLASS	CLAIMED	NON-CLAIMED
		G 0 6 F 13 / 16 (2006.01.01)	

CROSS REFERENCE(S)

CLASS	SUBCLASS (ONE SUBCLASS PER BLOCK)				

NONE (Assistant Examiner)	(Date)	**Total Claims Allowed:** 20	
/ERNEST UNELUS/ Primary Examiner.Art Unit 2181 (Primary Examiner)	10/14/2016 (Date)	O.G. Print Claim(s) 1	O.G. Print Figure 6

U.S. Patent and Trademark Office

Part of Paper No. 20161013

Issue Classification	Application/Control No.	Applicant(s)/Patent Under Reexamination
	15268728	VOTO ET AL.
	Examiner	**Art Unit**
	ERNEST UNELUS	2181

☐ Claims renumbered in the same order as presented by applicant ☐ CPA ☒ T.D. ☐ R.1.47

Final	Original	Final	Original	Final	Original	Final	Original	Final	Original	Final	Original	Final	Original	Final	Original
1	1		17												
2	2		18												
3	3		19												
4	4		20												
5	5		21												
6	6		22												
7	7		23												
8	8		24												
9	9	15	25												
10	10	16	26												
11	11	17	27												
12	12	18	28												
13	13	19	29												
14	14	20	30												
	15														
	16														

NONE (Assistant Examiner)	(Date)	**Total Claims Allowed:** 20	
/ERNEST UNELUS/ Primary Examiner.Art Unit 2181 (Primary Examiner)	10/14/2016 (Date)	O.G. Print Claim(s) 1	O.G. Print Figure 6

U.S. Patent and Trademark Office

Part of Paper No. 20161013

PTO/SB/08a (01-10)
Approved for use through 07/31/2012. OMB 0651-0031
U.S. Patent and Trademark Office; U.S. DEPARTMENT OF COMMERCE
Under the Paperwork Reduction Act of 1995, no persons are required to respond to a collection of information unless it contains a valid OMB control number.

INFORMATION DISCLOSURE STATEMENT BY APPLICANT (Not for submission under 37 CFR 1.99)		
	Application Number	15268728
	Filing Date	2016-09-19
	First Named Inventor	Robert M. Voto, et al.
	Art Unit	2181
	Examiner Name	Ernest Unelus
	Attorney Docket Number	DP-322037 CON

U.S.PATENTS Remove

Examiner Initial*	Cite No	Patent Number	Kind Code[1]	Issue Date	Name of Patentee or Applicant of cited Document	Pages,Columns,Lines where Relevant Passages or Relevant Figures Appear
	1	8447890	B1	2013-05-21	LeTourneur et al.	
	2	8447598	B2	2013-05-21	Chutorash et al.	
	3	7627708	B2	2009-12-01	Bohm et al.	
	4	7523243	B2	2009-04-21	Bohm et al.	
	5	7478191	B2	2009-01-13	Wurzburg et al.	
	6	7280802	B2	2007-10-09	Grady	
	7	7130656	B2	2006-10-31	Okagaki et al.	
	8	6957287	B2	2005-10-18	Lou et al.	

ALL REFERENCES CONSIDERED EXCEPT WHERE LINED THROUGH. /E.U./

INFORMATION DISCLOSURE STATEMENT BY APPLICANT (Not for submission under 37 CFR 1.99)	Application Number	15268728
	Filing Date	2016-09-19
	First Named Inventor	Robert M. Voto, et al.
	Art Unit	2181
	Examiner Name	Ernest Unelus
	Attorney Docket Number	DP-322037 CON

	9	6934793	B2	2005-08-23	Ying et al.	
	10	6732219	B1	2004-05-04	Broyles	
	11	6073188	A	2000-06-06	FLEMING SCOTT M	

If you wish to add additional U.S. Patent citation information please click the Add button. Add

U.S.PATENT APPLICATION PUBLICATIONS Remove

Examiner Initial*	Cite No	Publication Number	Kind Code[1]	Publication Date	Name of Patentee or Applicant of cited Document	Pages,Columns,Lines where Relevant Passages or Relevant Figures Appear
	1	20130106750	A1	2013-05-02	Kurosawa	
	2	20130053003	A1	2013-02-28	King, II	
	3	20120290859	A1	2012-11-15	Saladin et al.	
	4	20120191811	A1	2012-07-26	Ng et al.	
	5	20120134506	A1	2012-05-31	DeBiasio et al.	
	6	20110124300	A1	2011-05-26	Sinai	

ALL REFERENCES CONSIDERED EXCEPT WHERE LINED THROUGH. /E.U./

INFORMATION DISCLOSURE STATEMENT BY APPLICANT (Not for submission under 37 CFR 1.99)		
	Application Number	15268728
	Filing Date	2016-09-19
	First Named Inventor	Robert M. Voto, et al.
	Art Unit	2181
	Examiner Name	Ernest Unelus
	Attorney Docket Number	DP-322037 CON

	7	20110054721	A1	2011-03-03	Goodrich et al.		
	8	20090117890	A1	2009-05-07	Jacobsen et al.		
	9	20080005262	A1	2008-01-03	Wurzburg et al.		
	10	20070156293	A1	2007-07-05	Kellzi et al.		
	11	20070086724	A1	2007-04-19	Grady et al.		
	12	20070067553	A1	2007-03-22	Chang		
	13	20060056401	A1	2006-03-16	Bohm et al.		
	14	20030167345	A1	2003-09-04	Knight et al.		

If you wish to add additional U.S. Published Application citation information please click the Add button. Add

FOREIGN PATENT DOCUMENTS Remove

Examiner Initial*	Cite No	Foreign Document Number[3]	Country Code[2] i	Kind Code[4]	Publication Date	Name of Patentee or Applicant of cited Document	Pages,Columns,Lines where Relevant Passages or Relevant Figures Appear	T[5]
	1	2003256351	JP	A	2003-09-12	FURUKAWA TADAO		

EFS Web 2.1.17

ALL REFERENCES CONSIDERED EXCEPT WHERE LINED THROUGH. /E.U./

INFORMATION DISCLOSURE STATEMENT BY APPLICANT (Not for submission under 37 CFR 1.99)	Application Number	15268728
	Filing Date	2016-09-19
	First Named Inventor	Robert M. Voto, et al.
	Art Unit	2181
	Examiner Name	Ernest Unelus
	Attorney Docket Number	DP-322037 CON

	2	470887	TW	B	2002-01-01	JANG		

If you wish to add additional Foreign Patent Document citation information please click the Add button Add

NON-PATENT LITERATURE DOCUMENTS Remove

Examiner Initials*	Cite No	Include name of the author (in CAPITAL LETTERS), title of the article (when appropriate), title of the item (book, magazine, journal, serial, symposium, catalog, etc), date, pages(s), volume-issue number(s), publisher, city and/or country where published.	T[5]
	1	"FFI Rapport-A STUDY OF COMPUTER INTERFACES FOR SOLDIER SYSTEMS", Lars Erik Olsen & Joakin Flathagen, Norwegian Defence Research Establishment, October 10, 2005	
	2	"USB 2.0 Autoswitch User's Manual", Lindy Electronics Limited & Lindy-Elektronic GMBH, September 2002	
	3	"APC USB 2.0 Host Controller - Device Driver Download", http://www.liutilities.com/devicedriver/apcusb20hostcontroller/, July 2002	
	4	"Peripheral-Sharing Hardware Suits Education's Needs to a 'T'", Terian Tyre, T H E Journal (Technological Horizons In Education), October 1988	

If you wish to add additional non-patent literature document citation information please click the Add button Add

EXAMINER SIGNATURE

Examiner Signature	/Ernest Unelus/	Date Considered	10/31/2016

*EXAMINER: Initial if reference considered, whether or not citation is in conformance with MPEP 609. Draw line through a citation if not in conformance and not considered. Include copy of this form with next communication to applicant.

[1] See Kind Codes of USPTO Patent Documents at www.USPTO.GOV or MPEP 901.04. [2] Enter office that issued the document, by the two-letter code (WIPO Standard ST.3). [3] For Japanese patent documents, the indication of the year of the reign of the Emperor must precede the serial number of the patent document. [4] Kind of document by the appropriate symbols as indicated on the document under WIPO Standard ST.16 if possible. [5] Applicant is to place a check mark here if English language translation is attached.

ALL REFERENCES CONSIDERED EXCEPT WHERE LINED THROUGH. /E.U./

INFORMATION DISCLOSURE STATEMENT BY APPLICANT (Not for submission under 37 CFR 1.99)	Application Number	15268728
	Filing Date	2016-09-19
	First Named Inventor	Robert M. Voto, et al.
	Art Unit	2181
	Examiner Name	Ernest Unelus
	Attorney Docket Number	DP-322037 CON

CERTIFICATION STATEMENT

Please see 37 CFR 1.97 and 1.98 to make the appropriate selection(s):

That each item of information contained in the information disclosure statement was first cited in any communication from a foreign patent office in a counterpart foreign application not more than three months prior to the filing of the information disclosure statement. See 37 CFR 1.97(e)(1).

OR

☒ That no item of information contained in the information disclosure statement was cited in a communication from a foreign patent office in a counterpart foreign application, and, to the knowledge of the person signing the certification after making reasonable inquiry, no item of information contained in the information disclosure statement was known to any individual designated in 37 CFR 1.56(c) more than three months prior to the filing of the information disclosure statement. See 37 CFR 1.97(e)(2).

See attached certification statement.

The fee set forth in 37 CFR 1.17 (p) has been submitted herewith.

A certification statement is not submitted herewith.

SIGNATURE

A signature of the applicant or representative is required in accordance with CFR 1.33, 10.18. Please see CFR 1.4(d) for the form of the signature.

Signature	/Robert J. Myers/	Date (YYYY-MM-DD)	2016-10-24
Name/Print	Robert J. Myers	Registration Number	69,783

This collection of information is required by 37 CFR 1.97 and 1.98. The information is required to obtain or retain a benefit by the public which is to file (and by the USPTO to process) an application. Confidentiality is governed by 35 U.S.C. 122 and 37 CFR 1.14. This collection is estimated to take 1 hour to complete, including gathering, preparing and submitting the completed application form to the USPTO. Time will vary depending upon the individual case. Any comments on the amount of time you require to complete this form and/or suggestions for reducing this burden, should be sent to the Chief Information Officer, U.S. Patent and Trademark Office, U.S. Department of Commerce, P.O. Box 1450, Alexandria, VA 22313-1450. DO NOT SEND FEES OR COMPLETED FORMS TO THIS ADDRESS. **SEND TO: Commissioner for Patents, P.O. Box 1450, Alexandria, VA 22313-1450.**

ALL REFERENCES CONSIDERED EXCEPT WHERE LINED THROUGH. /E.U./

Privacy Act Statement

The Privacy Act of 1974 (P.L. 93-579) requires that you be given certain information in connection with your submission of the attached form related to a patent application or patent. Accordingly, pursuant to the requirements of the Act, please be advised that: (1) the general authority for the collection of this information is 35 U.S.C. 2(b)(2); (2) furnishing of the information solicited is voluntary; and (3) the principal purpose for which the information is used by the U.S. Patent and Trademark Office is to process and/or examine your submission related to a patent application or patent. If you do not furnish the requested information, the U.S. Patent and Trademark Office may not be able to process and/or examine your submission, which may result in termination of proceedings or abandonment of the application or expiration of the patent.

The information provided by you in this form will be subject to the following routine uses:

1. The information on this form will be treated confidentially to the extent allowed under the Freedom of Information Act (5 U.S.C. 552) and the Privacy Act (5 U.S.C. 552a). Records from this system of records may be disclosed to the Department of Justice to determine whether the Freedom of Information Act requires disclosure of these record s.

2. A record from this system of records may be disclosed, as a routine use, in the course of presenting evidence to a court, magistrate, or administrative tribunal, including disclosures to opposing counsel in the course of settlement negotiations.

3. A record in this system of records may be disclosed, as a routine use, to a Member of Congress submitting a request involving an individual, to whom the record pertains, when the individual has requested assistance from the Member with respect to the subject matter of the record.

4. A record in this system of records may be disclosed, as a routine use, to a contractor of the Agency having need for the information in order to perform a contract. Recipients of information shall be required to comply with the requirements of the Privacy Act of 1974, as amended, pursuant to 5 U.S.C. 552a(m).

5. A record related to an International Application filed under the Patent Cooperation Treaty in this system of records may be disclosed, as a routine use, to the International Bureau of the World Intellectual Property Organization, pursuant to the Patent Cooperation Treaty.

6. A record in this system of records may be disclosed, as a routine use, to another federal agency for purposes of National Security review (35 U.S.C. 181) and for review pursuant to the Atomic Energy Act (42 U.S.C. 218(c)).

7. A record from this system of records may be disclosed, as a routine use, to the Administrator, General Services, or his/her designee, during an inspection of records conducted by GSA as part of that agency's responsibility to recommend improvements in records management practices and programs, under authority of 44 U.S.C. 2904 and 2906. Such disclosure shall be made in accordance with the GSA regulations governing inspection of records for this purpose, and any other relevant (i.e., GSA or Commerce) directive. Such disclosure shall not be used to make determinations about individuals.

8. A record from this system of records may be disclosed, as a routine use, to the public after either publication of the application pursuant to 35 U.S.C. 122(b) or issuance of a patent pursuant to 35 U.S.C. 151. Further, a record may be disclosed, subject to the limitations of 37 CFR 1.14, as a routine use, to the public if the record was filed in an application which became abandoned or in which the proceedings were terminated and which application is referenced by either a published application, an application open to public inspections or an issued patent.

9. A record from this system of records may be disclosed, as a routine use, to a Federal, State, or local law enforcement agency, if the USPTO becomes aware of a violation or potential violation of law or regulation.

ALL REFERENCES CONSIDERED EXCEPT WHERE LINED THROUGH. /E.U./

EAST Search History

EAST Search History (Prior Art)

Ref #	Hits	Search Query	DBs	Default Operator	Plurals	Time Stamp
L2	30	usb with (downstream or upstream or plurality or multiple or second or another) with (port or plug interface) with (hub or adapt$3) and bypass$4 with (host or master or initiat$3 or slave) with (peripheral or device or port or plug interface) and (host or master or slave) near5 (initiat$4 or respond$3 or repl$4)	US-PGPUB; USPAT; USOCR; FPRS; EPO; JPO; DERWENT; IBM_TDB	OR	ON	2016/10/13 21:38
L3	21	usb with (peripheral or device) and usb with (plurality or multiple or second or another) with (port or plug interface) with (adapt$3 or hub) and (rout$3 or switch$4) with (port or plug interface) and (bypass$3 or bridg$3) and G06F2213/0042.cpc.	US-PGPUB; USPAT; USOCR; FPRS; EPO; JPO; DERWENT; IBM_TDB	OR	ON	2016/10/13 21:50
L4	24	usb with (peripheral or device) and usb with (plurality or multiple or second or another) with (port or plug interface) with (adapt$3 or hub) and (rout$3 or switch$4) with (port or plug interface) and (bypass$3 or bridg$3) and G06F13/4022.cpc.	US-PGPUB; USPAT; USOCR; FPRS; EPO; JPO; DERWENT; IBM_TDB	OR	ON	2016/10/13 21:51
L5	45	usb with (peripheral or device) and usb with (plurality or multiple or second or another) with (port or plug interface) with (adapt$3 or hub) and (rout$3 or switch$4) with (port or plug interface) and (bypass$3 or bridg$3) and G06F13/385.cpc.	US-PGPUB; USPAT; USOCR; FPRS; EPO; JPO; DERWENT; IBM_TDB	OR	ON	2016/10/13 21:51
L6	72	usb with (peripheral or device) and usb with (plurality or multiple or second or another) with (port or plug interface) with (adapt$3 or hub) and (rout$3 or switch$4) with (port or plug interface) and (bypass$3 or bridg$3) and G06F13/366,4068,4282,4027,385,4022.cpc.	US-PGPUB; USPAT; USOCR; FPRS; EPO; JPO; DERWENT; IBM_TDB	OR	ON	2016/10/13 21:52
L7	38	usb with (peripheral or device) and usb with (plurality or multiple or second or another) with (port or plug interface) with (adapt$3 or hub) and (rout$3 or switch$4) with (port or plug interface) and (bypass$3 or bridg$3) with (host or master or slave) and G06F13/366,4068,4282,4027,385,4022.cpc.	US-PGPUB; USPAT; USOCR; FPRS; EPO; JPO; DERWENT; IBM_TDB	OR	ON	2016/10/13 21:52
L8	20	usb with (peripheral or device) and usb with (plurality or multiple or second or another) with (port or plug interface) with (adapt$3 or hub) and (rout$3 or switch$4) with (port or plug interface) and (bypass$3 or bridg$3) with (host or master or slave) and G06F13/366,4068,4282,4027,385,4022.cpc. and (host or master or slave) with (initiate or initiated or initiating)	US-PGPUB; USPAT; USOCR; FPRS; EPO; JPO; DERWENT; IBM_TDB	OR	ON	2016/10/13 22:07

L9	20	usb with (peripheral or device) and usb with (plurality or multiple or second or another) with (port or plug interface) with (adapt$3 or hub) and (rout$3 or switch$4) with (port or plug interface) and (bypass$3 or bridg$3) with (host or master or slave) and G06F13/387,366,4068,4282,4027,385,4022,4045.cpc. and (host or master or slave) with (initiate or initiated or initiating)	US-PGPUB; USPAT; USOCR; FPRS; EPO; JPO; DERWENT; IBM_TDB	OR	ON	2016/10/13 22:23
L10	0	9 not 8	US-PGPUB; USPAT; USOCR; FPRS; EPO; JPO; DERWENT; IBM_TDB	OR	ON	2016/10/13 22:24
L11	7	usb with (peripheral or device) and usb with (plurality or multiple or second or another) with (port or plug interface) with (adapt$3 or hub) and (rout$3 or switch$4) with (port or plug interface) and (bypass$3 or bridg$3) with (host or master or slave) and G06F13/4022,4045.cpc. and (host or master or slave) with (initiate or initiated or initiating)	US-PGPUB; USPAT; USOCR; FPRS; EPO; JPO; DERWENT; IBM_TDB	OR	ON	2016/10/13 22:24
L12	1463	G06F13/4045.cpc.	US-PGPUB; USPAT; USOCR; FPRS; EPO; JPO; DERWENT; IBM_TDB	OR	ON	2016/10/13 22:24
L13	8217	G06F13/4022.cpc.	US-PGPUB; USPAT; USOCR; FPRS; EPO; JPO; DERWENT; IBM_TDB	OR	ON	2016/10/13 22:24
L14	23	usb with (peripheral or device) and usb with (plurality or multiple or second or another) with (port or plug interface) with (adapt$3 or hub) and (rout$3 or switch$4) with (port or plug interface) and (bypass$3 or bridg$3) with (host or master or slave) and 710/$.ccls. and (host or master or slave) with (initiate or initiated or initiating)	US-PGPUB; USPAT; USOCR; FPRS; EPO; JPO; DERWENT; IBM_TDB	OR	ON	2016/10/13 22:25
L15	11	usb with (peripheral or device) and usb with (plurality or multiple or second or another) with (port or plug interface) with (adapt$3 or hub) and (rout$3 or switch$4) with (port or plug interface) and (bypass$3 or bridg$3) with (host or master or slave) and 710/15,305,313.ccls. and (host or master or slave) with (initiate or initiated or initiating)	US-PGPUB; USPAT; USOCR; FPRS; EPO; JPO; DERWENT; IBM_TDB	OR	ON	2016/10/13 22:26
L16	28	Shyambabu Yeda.in. or Robert Voto.in. or Craig Petku.in.	US-PGPUB; USPAT; USOCR; FPRS; EPO; JPO; DERWENT; IBM_TDB	NEAR	ON	2016/10/13 22:27
L17	3	16 and (vehicle or automobile or car) with usb with (peripheral or device) and bridge	US-PGPUB; USPAT; USOCR; FPRS;	OR	ON	2016/10/13 22:27

			EPO; JPO; DERWENT; IBM_TDB			
L18	15295	G06F13/385.cpc.	US-PGPUB; USPAT; USOCR; FPRS; EPO; JPO; DERWENT; IBM_TDB	OR	ON	2016/10/13 22:29
S65	171	usb with (peripheral or device) and usb with (downstream or upstream or plurality or multiple or second or another) with (port or plug interface) and hub with (hub or adapt$3) and bypass$4 with (host or master or initiat$3)	US-PGPUB; USPAT; USOCR; FPRS; EPO; JPO; DERWENT; IBM_TDB	OR	ON	2016/10/13 12:41
S66	173	usb with (peripheral or device) and usb with (downstream or upstream or plurality or multiple or second or another) with (port or plug interface) and hub with (hub or adapt$3) and bypass$4 with (host or master or initiat$3 or slave)	US-PGPUB; USPAT; USOCR; FPRS; EPO; JPO; DERWENT; IBM_TDB	OR	ON	2016/10/13 12:41
S67	55	usb with (peripheral or device) and usb with (downstream or upstream or plurality or multiple or second or another) with (port or plug interface) and hub with (hub or adapt$3) and bypass$4 with (host or master or initiat$3 or slave) with (peripheral or device or port or plug interface)	US-PGPUB; USPAT; USOCR; FPRS; EPO; JPO; DERWENT; IBM_TDB	OR	ON	2016/10/13 12:48
S68	44	usb with (downstream or upstream or plurality or multiple or second or another) with (port or plug interface) with (hub or adapt$3) and bypass$4 with (host or master or initiat$3 or slave) with (peripheral or device or port or plug interface)	US-PGPUB; USPAT; USOCR; FPRS; EPO; JPO; DERWENT; IBM_TDB	OR	ON	2016/10/13 13:58
S69	30	usb with (downstream or upstream or plurality or multiple or second or another) with (port or plug interface) with (hub or adapt$3) and bypass$4 with (host or master or initiat$3 or slave) with (peripheral or device or port or plug interface) and (host or master or slave) near5 (initiat$4 or respond$3 or repl$4)	US-PGPUB; USPAT; USOCR; FPRS; EPO; JPO; DERWENT; IBM_TDB	OR	ON	2016/10/13 14:58
S70	0	("2016/0132448").URPN.	USPAT	OR	OFF	2016/10/13 15:04

10/13/2016 10:31:02 PM
C:\Users\eunelus\Documents\EAST\Workspaces\14487947.wsp

Microchip Ex. 1004, p. 170
Microchip v. Aptiv
IPR2024-00558

UNITED STATES PATENT AND TRADEMARK OFFICE

UNITED STATES DEPARTMENT OF COMMERCE
United States Patent and Trademark Office
Address: COMMISSIONER FOR PATENTS
P.O. Box 1450
Alexandria, Virginia 22313-1450
www.uspto.gov

BIB DATA SHEET

CONFIRMATION NO. 4506

SERIAL NUMBER	FILING or 371(c) DATE	CLASS	GROUP ART UNIT	ATTORNEY DOCKET NO.
15/268,728	09/19/2016 RULE	710	2181	DP-322037 CON

APPLICANTS
DELPHI TECHNOLOGIES, INC., TROY, MI;

INVENTORS
Robert M. Voto, Clarkston, MI;
Shyambabu Yeda, Rochester Hills, MI;
Craig Allan Petku, Clarkston, MI;

**** CONTINUING DATA ****************************
This application is a CON of 14/487,947 09/16/2014 PAT 9460037
which claims benefit of 61/882,915 09/26/2013

**** FOREIGN APPLICATIONS ****************************

**** IF REQUIRED, FOREIGN FILING LICENSE GRANTED ****
09/28/2016

Foreign Priority claimed ☐ Yes ☑ No 35 USC 119(a-d) conditions met ☐ Yes ☐ No Verified and Acknowledged /ERNEST UNELUS/ Examiner's Signature	☐ Met after Allowance E.U Initials	STATE OR COUNTRY	SHEETS DRAWINGS	TOTAL CLAIMS	INDEPENDENT CLAIMS
		MI	8	~~30~~ 20	~~10~~ 5

ADDRESS
Delphi Technologies, Inc.
P.O. Box 5052
M/C 483-400-402
Troy, MI 48007-5052
UNITED STATES

TITLE
FLEXIBLE MOBILE DEVICE CONNECTIVITY TO AUTOMOTIVE SYSTEMS WITH UBS HUBS

FILING FEE RECEIVED		
5480	FEES: Authority has been given in Paper No._____ to charge/credit DEPOSIT ACCOUNT No._____ for following:	☐ All Fees ☐ 1.16 Fees (Filing) ☐ 1.17 Fees (Processing Ext. of time) ☐ 1.18 Fees (Issue) ☐ Other _____ ☐ Credit

Index of Claims	Application/Control No.	Applicant(s)/Patent Under Reexamination
	15268728	VOTO ET AL.
	Examiner	**Art Unit**
	ERNEST UNELUS	2181

✓	Rejected	-	Cancelled	N	Non-Elected	A	Appeal
=	Allowed	÷	Restricted	I	Interference	O	Objected

☐ Claims renumbered in the same order as presented by applicant ☐ CPA ☒ T.D. ☐ R.1.47

CLAIM		DATE								
Final	Original	10/14/2016								
1	1	=								
2	2	=								
3	3	=								
4	4	=								
5	5	=								
6	6	=								
7	7	=								
8	8	=								
9	9	=								
10	10	=								
11	11	=								
12	12	=								
13	13	=								
14	14	=								
	15	-								
	16	-								
	17	-								
	18	-								
	19	-								
	20	-								
	21	-								
	22	-								
	23	-								
	24	-								
15	25	=								
16	26	=								
17	27	=								
18	28	=								
19	29	=								
20	30	=								

Microchip Ex. 1004, p. 172
Microchip v. Aptiv
IPR2024-00558

UNITED STATES PATENT AND TRADEMARK OFFICE

UNITED STATES DEPARTMENT OF COMMERCE
United States Patent and Trademark Office
Address: COMMISSIONER FOR PATENTS
P.O. Box 1450
Alexandria, Virginia 22313-1450
www.uspto.gov

APPLICATION NUMBER	FILING OR 371(C) DATE	FIRST NAMED APPLICANT	ATTY. DOCKET NO./TITLE
15/268,728	09/19/2016	Robert M. Voto	DP-322037 CON

CONFIRMATION NO. 4506

22851
Delphi Technologies, Inc.
P.O. Box 5052
M/C 483-400-402
Troy, MI 48007-5052

PUBLICATION NOTICE

OC000000088302043

Title:FLEXIBLE MOBILE DEVICE CONNECTIVITY TO AUTOMOTIVE SYSTEMS WITH UBS HUBS

Publication No.US-2017-0004103-A1
Publication Date:01/05/2017

NOTICE OF PUBLICATION OF APPLICATION

The above-identified application will be electronically published as a patent application publication pursuant to 37 CFR 1.211, et seq. The patent application publication number and publication date are set forth above.

The publication may be accessed through the USPTO's publically available Searchable Databases via the Internet at www.uspto.gov. The direct link to access the publication is currently http://www.uspto.gov/patft/.

The publication process established by the Office does not provide for mailing a copy of the publication to applicant. A copy of the publication may be obtained from the Office upon payment of the appropriate fee set forth in 37 CFR 1.19(a)(1). Orders for copies of patent application publications are handled by the USPTO's Office of Public Records. The Office of Public Records can be reached by telephone at (571) 272-3150 or (800) 972-6382, by facsimile at (571) 273-3250, by mail addressed to the United States Patent and Trademark Office, Office of Public Records, Alexandria, VA 22313-1450 or via the Internet.

In addition, information on the status of the application, including the mailing date of Office actions and the dates of receipt of correspondence filed in the Office, may also be accessed via the Internet through the Patent Electronic Business Center at www.uspto.gov using the public side of the Patent Application Information and Retrieval (PAIR) system. The direct link to access this status information is currently http://pair.uspto.gov/. Prior to publication, such status information is confidential and may only be obtained by applicant using the private side of PAIR.

Further assistance in electronically accessing the publication, or about PAIR, is available by calling the Patent Electronic Business Center at 1-866-217-9197.

Office of Data Managment, Application Assistance Unit (571) 272-4000, or (571) 272-4200, or 1-888-786-0101

Microchip Ex. 1004, p. 173
Microchip v. Aptiv
IPR2024-00558

IN THE UNITED STATES PATENT AND TRADEMARK OFFICE

Appl. No.:	15/268,728	Confirmation No.: 4506
Applicant:	Delphi Technologies, Inc.	
Inventors:	Robert M. Voto, et al.	
Title:	Flexible Mobile Device Connectivity to Automotive Systems with USB Hubs	
Filed:	09/19/2016	
Examiner:	Ernest Unelus	
Art Unit:	2181	
Attorney Docket No.:	DP-322037 Con	

TRANSMITTAL LETTER

Commissioner for Patents
P. O. Box 5052
Alexandria, VA 22313-1450

Dear Sir:

This paper is in reply to the Informational Notice to Applicant mailed on September 30, 2016 for the above referenced application. Attached is an amended Application Data Sheet correcting the name of inventor Craig Petku with underlined text indicating insertions and strike through indicating deletions. The Declaration for named inventors Robert M. Voto, Shyambabu Yeda, and Craig Petku was previously filed on October 28, 2016. Please charge any fees or credit any overpayments to Deposit Account No. 50-0831 to Delphi Technologies, Inc.

Respectfully submitted,
/Robert J. Myers/

Robert J. Myers
Reg. No. 69,783
Delphi Technologies, Inc.
Legal Staff – M/C 483-400-402
P.O. Box 5052
Troy, Michigan 48007-5052
(248) 813-2512 (work)
(248) 321-0709 (mobile)
bob.myers@delphi.com

PTO/AIA/14 (11-15)
Approved for use through 04/30/2017. OMB 0651-0032
U.S. Patent and Trademark Office; U.S. DEPARTMENT OF COMMERCE
Under the Paperwork Reduction Act of 1995, no persons are required to respond to a collection of information unless it contains a valid OMB control number.

Application Data Sheet 37 CFR 1.76	Attorney Docket Number	DP-322037 CON
	Application Number	
Title of Invention	FLEXIBLE MOBILE DEVICE CONNECTIVITY TO AUTOMOTIVE SYSTEMS WITH UBS HUBS	

The application data sheet is part of the provisional or nonprovisional application for which it is being submitted. The following form contains the bibliographic data arranged in a format specified by the United States Patent and Trademark Office as outlined in 37 CFR 1.76.
This document may be completed electronically and submitted to the Office in electronic format using the Electronic Filing System (EFS) or the document may be printed and included in a paper filed application.

Secrecy Order 37 CFR 5.2:

☐ Portions or all of the application associated with this Application Data Sheet may fall under a Secrecy Order pursuant to 37 CFR 5.2 (Paper filers only. Applications that fall under Secrecy Order may not be filed electronically.)

Inventor Information:

Inventor 1 Remove

Legal Name

Prefix	Given Name	Middle Name	Family Name	Suffix
	Robert	M.	Voto	

Residence Information (Select One) ◉ US Residency ◯ Non US Residency ◯ Active US Military Service

City	Clarkston	State/Province	MI	Country of Residence	US

Mailing Address of Inventor:

Address 1	7054 Oakhurst Ridge		
Address 2			
City	Clarkston	State/Province	MI
Postal Code	48348	Country i	US

Inventor 2 Remove

Legal Name

Prefix	Given Name	Middle Name	Family Name	Suffix
	Shyambabu		Yeda	

Residence Information (Select One) ◉ US Residency ◯ Non US Residency ◯ Active US Military Service

City	Rochester Hills	State/Province	MI	Country of Residence	US

Mailing Address of Inventor:

Address 1	2134 Cattail Circle		
Address 2			
City	Rochester Hills	State/Province	MI
Postal Code	48309	Country i	US

Inventor 3 Remove

Legal Name

Prefix	Given Name	Middle Name	Family Name	Suffix
	Craig	~~Allan~~	Petku	

Residence Information (Select One) ◉ US Residency ◯ Non US Residency ◯ Active US Military Service

Under the Paperwork Reduction Act of 1995, no persons are required to respond to a collection of information unless it contains a valid OMB control number.

Application Data Sheet 37 CFR 1.76	Attorney Docket Number	DP-322037 CON
	Application Number	
Title of Invention	FLEXIBLE MOBILE DEVICE CONNECTIVITY TO AUTOMOTIVE SYSTEMS WITH UBS HUBS	

City	Clarkston	State/Province	MI	Country of Residence	US

Mailing Address of Inventor:

Address 1	5188 Iroquois Court		
Address 2			
City	Clarkston	State/Province	MI
Postal Code	48348	Country i	US

All Inventors Must Be Listed - Additional Inventor Information blocks may be generated within this form by selecting the **Add** button. Add

Correspondence Information:

Enter either Customer Number or complete the Correspondence Information section below. For further information see 37 CFR 1.33(a).

☐ **An Address is being provided for the correspondence Information of this application.**

Customer Number	22851		
Email Address		Add Email	Remove Email

Application Information:

Title of the Invention	FLEXIBLE MOBILE DEVICE CONNECTIVITY TO AUTOMOTIVE SYSTEMS WITH UBS HUBS		
Attorney Docket Number	DP-322037 CON	Small Entity Status Claimed	☐
Application Type	Nonprovisional		
Subject Matter	Utility		
Total Number of Drawing Sheets (if any)	8	Suggested Figure for Publication (if any)	

Filing By Reference:

Only complete this section when filing an application by reference under 35 U.S.C. 111(c) and 37 CFR 1.57(a). Do not complete this section if application papers including a specification and any drawings are being filed. Any domestic benefit or foreign priority information must be provided in the appropriate section(s) below (i.e., "Domestic Benefit/National Stage Information" and "Foreign Priority Information").

For the purposes of a filing date under 37 CFR 1.53(b), the description and any drawings of the present application are replaced by this reference to the previously filed application, subject to conditions and requirements of 37 CFR 1.57(a).

Application number of the previously filed application	Filing date (YYYY-MM-DD)	Intellectual Property Authority or Country

Publication Information:

☐ Request Early Publication (Fee required at time of Request 37 CFR 1.219)

☐ **Request Not to Publish.** I hereby request that the attached application not be published under 35 U.S.C. 122(b) and certify that the invention disclosed in the attached application **has not and will not** be the subject of an application filed in another country, or under a multilateral international agreement, that requires publication at eighteen months after filing.

Application Data Sheet 37 CFR 1.76	Attorney Docket Number	DP-322037 CON
	Application Number	
Title of Invention	FLEXIBLE MOBILE DEVICE CONNECTIVITY TO AUTOMOTIVE SYSTEMS WITH UBS HUBS	

Representative Information:

Representative information should be provided for all practitioners having a power of attorney in the application. Providing this information in the Application Data Sheet does not constitute a power of attorney in the application (see 37 CFR 1.32).
Either enter Customer Number or complete the Representative Name section below. If both sections are completed the customer Number will be used for the Representative Information during processing.

Please Select One:	◉ Customer Number	◯ US Patent Practitioner	◯ Limited Recognition (37 CFR 11.9)
Customer Number	22851		

Domestic Benefit/National Stage Information:

This section allows for the applicant to either claim benefit under 35 U.S.C. 119(e), 120, 121, 365(c), or 386(c) or indicate National Stage entry from a PCT application. Providing benefit claim information in the Application Data Sheet constitutes the specific reference required by 35 U.S.C. 119(e) or 120, and 37 CFR 1.78.
When referring to the current application, please leave the "Application Number" field blank.

Prior Application Status	Pending		Remove
Application Number	Continuity Type	Prior Application Number	Filing or 371(c) Date (YYYY-MM-DD)
	Continuation of	14487947	2014-09-16
Prior Application Status			Remove
Application Number	Continuity Type	Prior Application Number	Filing or 371(c) Date (YYYY-MM-DD)
14487947	Claims benefit of provisional	61882915	2013-09-26

Additional Domestic Benefit/National Stage Data may be generated within this form by selecting the **Add** button.

Foreign Priority Information:

This section allows for the applicant to claim priority to a foreign application. Providing this information in the application data sheet constitutes the claim for priority as required by 35 U.S.C. 119(b) and 37 CFR 1.55. When priority is claimed to a foreign application that is eligible for retrieval under the priority document exchange program (PDX)[1] the information will be used by the Office to automatically attempt retrieval pursuant to 37 CFR 1.55(i)(1) and (2). Under the PDX program, applicant bears the ultimate responsibility for ensuring that a copy of the foreign application is received by the Office from the participating foreign intellectual property office, or a certified copy of the foreign priority application is filed, within the time period specified in 37 CFR 1.55(g)(1).

Under the Paperwork Reduction Act of 1995, no persons are required to respond to a collection of information unless it contains a valid OMB control number.

Application Data Sheet 37 CFR 1.76	Attorney Docket Number	DP-322037 CON
	Application Number	
Title of Invention	FLEXIBLE MOBILE DEVICE CONNECTIVITY TO AUTOMOTIVE SYSTEMS WITH UBS HUBS	

Remove

Application Number	Country[i]	Filing Date (YYYY-MM-DD)	Access Code[j] (if applicable)

Additional Foreign Priority Data may be generated within this form by selecting the **Add** button.

Statement under 37 CFR 1.55 or 1.78 for AIA (First Inventor to File) Transition Applications

☐ This application (1) claims priority to or the benefit of an application filed before March 16, 2013 and (2) also contains, or contained at any time, a claim to a claimed invention that has an effective filing date on or after March 16, 2013.
NOTE: By providing this statement under 37 CFR 1.55 or 1.78, this application, with a filing date on or after March 16, 2013, will be examined under the first inventor to file provisions of the AIA.

Under the Paperwork Reduction Act of 1995, no persons are required to respond to a collection of information unless it contains a valid OMB control number.

Application Data Sheet 37 CFR 1.76	Attorney Docket Number	DP-322037 CON
	Application Number	
Title of Invention	FLEXIBLE MOBILE DEVICE CONNECTIVITY TO AUTOMOTIVE SYSTEMS WITH UBS HUBS	

Authorization or Opt-Out of Authorization to Permit Access:

When this Application Data Sheet is properly signed and filed with the application, applicant has provided written authority to permit a participating foreign intellectual property (IP) office access to the instant application-as-filed (see paragraph A in subsection 1 below) and the European Patent Office (EPO) access to any search results from the instant application (see paragraph B in subsection 1 below).

Should applicant choose not to provide an authorization identified in subsection 1 below, applicant **must opt-out** of the authorization by checking the corresponding box A or B or both in subsection 2 below.

NOTE: This section of the Application Data Sheet is **ONLY** reviewed and processed with the **INITIAL** filing of an application. After the initial filing of an application, an Application Data Sheet cannot be used to provide or rescind authorization for access by a foreign IP office(s). Instead, Form PTO/SB/39 or PTO/SB/69 must be used as appropriate.

1. Authorization to Permit Access by a Foreign Intellectual Property Office(s)

A. **Priority Document Exchange (PDX)** - Unless box A in subsection 2 (opt-out of authorization) is checked, the undersigned hereby **grants the USPTO authority** to provide the European Patent Office (EPO), the Japan Patent Office (JPO), the Korean Intellectual Property Office (KIPO), the State Intellectual Property Office of the People's Republic of China (SIPO), the World Intellectual Property Organization (WIPO), and any other foreign intellectual property office participating with the USPTO in a bilateral or multilateral priority document exchange agreement in which a foreign application claiming priority to the instant patent application is filed, access to: (1) the instant patent application-as-filed and its related bibliographic data, (2) any foreign or domestic application to which priority or benefit is claimed by the instant application and its related bibliographic data, and (3) the date of filing of this Authorization. See 37 CFR 1.14(h)(1).

B. **Search Results from U.S. Application to EPO** - Unless box B in subsection 2 (opt-out of authorization) is checked, the undersigned hereby **grants the USPTO authority** to provide the EPO access to the bibliographic data and search results from the instant patent application when a European patent application claiming priority to the instant patent application is filed. See 37 CFR 1.14(h)(2).

The applicant is reminded that the EPO's Rule 141(1) EPC (European Patent Convention) requires applicants to submit a copy of search results from the instant application without delay in a European patent application that claims priority to the instant application.

2. Opt-Out of Authorizations to Permit Access by a Foreign Intellectual Property Office(s)

☐ A. Applicant **DOES NOT** authorize the USPTO to permit a participating foreign IP office access to the instant application-as-filed. If this box is checked, the USPTO will not be providing a participating foreign IP office with any documents and information identified in subsection 1A above.

☐ B. Applicant **DOES NOT** authorize the USPTO to transmit to the EPO any search results from the instant patent application. If this box is checked, the USPTO will not be providing the EPO with search results from the instant application.

NOTE: Once the application has published or is otherwise publicly available, the USPTO may provide access to the application in accordance with 37 CFR 1.14.

Under the Paperwork Reduction Act of 1995, no persons are required to respond to a collection of information unless it contains a valid OMB control number.

Application Data Sheet 37 CFR 1.76	Attorney Docket Number	DP-322037 CON
	Application Number	
Title of Invention	FLEXIBLE MOBILE DEVICE CONNECTIVITY TO AUTOMOTIVE SYSTEMS WITH UBS HUBS	

Applicant Information:

Providing assignment information in this section does not substitute for compliance with any requirement of part 3 of Title 37 of CFR to have an assignment recorded by the Office.

Applicant 1

If the applicant is the inventor (or the remaining joint inventor or inventors under 37 CFR 1.45), this section should not be completed. The information to be provided in this section is the name and address of the legal representative who is the applicant under 37 CFR 1.43; or the name and address of the assignee, person to whom the inventor is under an obligation to assign the invention, or person who otherwise shows sufficient proprietary interest in the matter who is the applicant under 37 CFR 1.46. If the applicant is an applicant under 37 CFR 1.46 (assignee, person to whom the inventor is obligated to assign, or person who otherwise shows sufficient proprietary interest) together with one or more joint inventors, then the joint inventor or inventors who are also the applicant should be identified in this section.

Clear

(●) Assignee ( ) Legal Representative under 35 U.S.C. 117 ( ) Joint Inventor

( ) Person to whom the inventor is obligated to assign. ( ) Person who shows sufficient proprietary interest

If applicant is the legal representative, indicate the authority to file the patent application, the inventor is:

Name of the Deceased or Legally Incapacitated Inventor:

If the Applicant is an Organization check here. ☒

Organization Name	DELPHI TECHNOLOGIES, INC.		
Mailing Address Information For Applicant:			
Address 1	P. O. BOX 5052		
Address 2	M/C: 483-400-402		
City	TROY	**State/Province**	MI
Country	US	Postal Code	48007-5052
Phone Number		Fax Number	
Email Address			

Additional Applicant Data may be generated within this form by selecting the Add button.

Assignee Information including Non-Applicant Assignee Information:

Providing assignment information in this section does not substitute for compliance with any requirement of part 3 of Title 37 of CFR to have an assignment recorded by the Office.

Under the Paperwork Reduction Act of 1995, no persons are required to respond to a collection of information unless it contains a valid OMB control number.

Application Data Sheet 37 CFR 1.76	Attorney Docket Number	DP-322037 CON
	Application Number	
Title of Invention	FLEXIBLE MOBILE DEVICE CONNECTIVITY TO AUTOMOTIVE SYSTEMS WITH UBS HUBS	

Assignee 1

Complete this section if assignee information, including non-applicant assignee information, is desired to be included on the patent application publication. An assignee-applicant identified in the "Applicant Information" section will appear on the patent application publication as an applicant. For an assignee-applicant, complete this section only if identification as an assignee is also desired on the patent application publication.

If the Assignee or Non-Applicant Assignee is an Organization check here. ☐

Prefix	Given Name	Middle Name	Family Name	Suffix

Mailing Address Information For Assignee including Non-Applicant Assignee:

Address 1			
Address 2			
City		State/Province	
Country i		Postal Code	
Phone Number		Fax Number	
Email Address			

Additional Assignee or Non-Applicant Assignee Data may be generated within this form by selecting the Add button.

Signature:

NOTE: This Application Data Sheet must be signed in accordance with 37 CFR 1.33(b). **However, if this Application Data Sheet is submitted with the INITIAL filing of the application and either box A or B is not checked in subsection 2 of the "Authorization or Opt-Out of Authorization to Permit Access" section, then this form must also be signed in accordance with 37 CFR 1.14(c).**

This Application Data Sheet must be signed by a patent practitioner if one or more of the applicants is a **juristic entity** (e.g., corporation or association). If the applicant is two or more joint inventors, this form must be signed by a patent practitioner, all joint inventors who are the applicant, or one or more joint inventor-applicants who have been given power of attorney (e.g., see USPTO Form PTO/AIA/81) on behalf of all joint inventor-applicants.

See 37 CFR 1.4(d) for the manner of making signatures and certifications.

Signature	/Robert J. Myers/			Date (YYYY-MM-DD)	2016-09-19
First Name	Robert	Last Name	Myers	Registration Number	69783

Additional Signature may be generated within this form by selecting the Add button.

Application Data Sheet 37 CFR 1.76	Attorney Docket Number	DP-322037 CON
	Application Number	
Title of Invention	FLEXIBLE MOBILE DEVICE CONNECTIVITY TO AUTOMOTIVE SYSTEMS WITH UBS HUBS	

This collection of information is required by 37 CFR 1.76. The information is required to obtain or retain a benefit by the public which is to file (and by the USPTO to process) an application. Confidentiality is governed by 35 U.S.C. 122 and 37 CFR 1.14. This collection is estimated to take 23 minutes to complete, including gathering, preparing, and submitting the completed application data sheet form to the USPTO. Time will vary depending upon the individual case. Any comments on the amount of time you require to complete this form and/or suggestions for reducing this burden, should be sent to the Chief Information Officer, U.S. Patent and Trademark Office, U.S. Department of Commerce, P.O. Box 1450, Alexandria, VA 22313-1450. DO NOT SEND FEES OR COMPLETED FORMS TO THIS ADDRESS. **SEND TO: Commissioner for Patents, P.O. Box 1450, Alexandria, VA 22313-1450.**

Privacy Act Statement

The Privacy Act of 1974 (P.L. 93-579) requires that you be given certain information in connection with your submission of the attached form related to a patent application or patent. Accordingly, pursuant to the requirements of the Act, please be advised that: (1) the general authority for the collection of this information is 35 U.S.C. 2(b)(2); (2) furnishing of the information solicited is voluntary; and (3) the principal purpose for which the information is used by the U.S. Patent and Trademark Office is to process and/or examine your submission related to a patent application or patent. If you do not furnish the requested information, the U.S. Patent and Trademark Office may not be able to process and/or examine your submission, which may result in termination of proceedings or abandonment of the application or expiration of the patent.

The information provided by you in this form will be subject to the following routine uses:

1. The information on this form will be treated confidentially to the extent allowed under the Freedom of Information Act (5 U.S.C. 552) and the Privacy Act (5 U.S.C. 552a). Records from this system of records may be disclosed to the Department of Justice to determine whether the Freedom of Information Act requires disclosure of these records.

2. A record from this system of records may be disclosed, as a routine use, in the course of presenting evidence to a court, magistrate, or administrative tribunal, including disclosures to opposing counsel in the course of settlement negotiations.

3. A record in this system of records may be disclosed, as a routine use, to a Member of Congress submitting a request involving an individual, to whom the record pertains, when the individual has requested assistance from the Member with respect to the subject matter of the record.

4. A record in this system of records may be disclosed, as a routine use, to a contractor of the Agency having need for the information in order to perform a contract. Recipients of information shall be required to comply with the requirements of the Privacy Act of 1974, as amended, pursuant to 5 U.S.C. 552a(m).

5. A record related to an international Application filed under the Patent Cooperation Treaty in this system of records may be disclosed, as a routine use, to the International Bureau of the World Intellectual Property Organization, pursuant to the Patent CooperationTreaty.

6. A record in this system of records may be disclosed, as a routine use, to another federal agency for purposes of National Security review (35 U.S.C. 181) and for review pursuant to the Atomic Energy Act (42 U.S.C. 218(c)).

7. A record from this system of records may be disclosed, as a routine use, to the Administrator, General Services, or his/her designee, during an inspection of records conducted by GSA as part of that agency's responsibility to recommend improvements in records management practices and programs, under authority of 44 U.S.C. 2904 and 2906. Such disclosure shall be made in accordance with the GSA regulations governing inspection of records for this purpose, and any other relevant (i.e., GSA or Commerce) directive. Such disclosure shall not be used to make determinations about individuals.

8. A record from this system of records may be disclosed, as a routine use, to the public after either publication of the application pursuant to 35 U.S.C. 122(b) or issuance of a patent pursuant to 35 U.S.C. 151. Further, a record may be disclosed, subject to the limitations of 37 CFR 1.14, as a routine use, to the public if the record was filed in an application which became abandoned or in which the proceedings were terminated and which application is referenced by either a published application, an application open to public inspections or an issued patent.

9. A record from this system of records may be disclosed, as a routine use, to a Federal, State, or local law enforcement agency, if the USPTO becomes aware of a violation or potential violation of law or regulation.

Electronic Acknowledgement Receipt

EFS ID:	28007780
Application Number:	15268728
International Application Number:	
Confirmation Number:	4506
Title of Invention:	FLEXIBLE MOBILE DEVICE CONNECTIVITY TO AUTOMOTIVE SYSTEMS WITH UBS HUBS
First Named Inventor/Applicant Name:	Robert M. Voto
Customer Number:	22851
Filer:	Lawrence Dean Hazelton/Kandace Powell
Filer Authorized By:	Lawrence Dean Hazelton
Attorney Docket Number:	DP-322037 CON
Receipt Date:	09-JAN-2017
Filing Date:	19-SEP-2016
Time Stamp:	14:02:26
Application Type:	Utility under 35 USC 111(a)

Payment information:

Submitted with Payment	no

File Listing:

Document Number	Document Description	File Name	File Size(Bytes)/ Message Digest	Multi Part /.zip	Pages (if appl.)
1	Transmittal Letter	DP322037_CON_Trans_Ltr_Corr_ADS.pdf	14057 afb514ad753e579e2c10fb4d6371a79e86620373	no	1

Warnings:

Information:					
2	Application Data Sheet	DP322037CON_CORR_ADS_09 JAN17.pdf	357494 7c0fcfa583cf2c54cc9595dbd3f39cf1329e071f	no	9

Warnings:

Information:

This is not an USPTO supplied ADS fillable form

The page size in the PDF is too large. The pages should be 8.5 x 11 or A4. If this PDF is submitted, the pages will be resized upon entry into the Image File Wrapper and may affect subsequent processing

Total Files Size (in bytes):	371551

This Acknowledgement Receipt evidences receipt on the noted date by the USPTO of the indicated documents, characterized by the applicant, and including page counts, where applicable. It serves as evidence of receipt similar to a Post Card, as described in MPEP 503.

New Applications Under 35 U.S.C. 111
If a new application is being filed and the application includes the necessary components for a filing date (see 37 CFR 1.53(b)-(d) and MPEP 506), a Filing Receipt (37 CFR 1.54) will be issued in due course and the date shown on this Acknowledgement Receipt will establish the filing date of the application.

National Stage of an International Application under 35 U.S.C. 371
If a timely submission to enter the national stage of an international application is compliant with the conditions of 35 U.S.C. 371 and other applicable requirements a Form PCT/DO/EO/903 indicating acceptance of the application as a national stage submission under 35 U.S.C. 371 will be issued in addition to the Filing Receipt, in due course.

New International Application Filed with the USPTO as a Receiving Office
If a new international application is being filed and the international application includes the necessary components for an international filing date (see PCT Article 11 and MPEP 1810), a Notification of the International Application Number and of the International Filing Date (Form PCT/RO/105) will be issued in due course, subject to prescriptions concerning national security, and the date shown on this Acknowledgement Receipt will establish the international filing date of the application.

Document code: WFEE

United States Patent and Trademark Office
Sales Receipt for Accounting Date: 01/13/2017

MTEKLEMI SALE #00000008 Mailroom Dt: 01/09/2017 500831 15268728
01 FC : 1830 140.00 DA

UNITED STATES PATENT AND TRADEMARK OFFICE

UNITED STATES DEPARTMENT OF COMMERCE
United States Patent and Trademark Office
Address: COMMISSIONER FOR PATENTS
P.O. Box 1450
Alexandria, Virginia 22313-1450
www.uspto.gov

APPLICATION NUMBER	FILING OR 371(C) DATE	FIRST NAMED APPLICANT	ATTY. DOCKET NO./TITLE
15/268,728	09/19/2016	Robert M. Voto	DP-322037 CON

CONFIRMATION NO. 4506

22851
Delphi Technologies, Inc.
P.O. Box 5052
M/C 483-400-402
Troy, MI 48007-5052

37 CFR 1.48(f)
ACKNOWLEDGEMENT LETTER

OC000000088494828

Date Mailed: 01/17/2017

NOTICE OF ACCEPTANCE OF REQUEST UNDER 37 CFR 1.48(f)

This is in response to the applicant's request under 37 CFR 1.48(f) submitted on 01/09/2017.

The request under 37 CFR 1.48(f) to correct the inventorship, to correct or update the name of an inventor, or to correct the order of names of joint inventors is accepted.

Questions about the contents of this notice and the requirements it sets forth should be directed to the Office of Data Management, Application Assistance Unit, at **(571) 272-4000** or **(571) 272-4200** or **1-888-786-0101**.

/ggasgedom/

Microchip Ex. 1004, p. 187
Microchip v. Aptiv
IPR2024-00558

UNITED STATES PATENT AND TRADEMARK OFFICE

UNITED STATES DEPARTMENT OF COMMERCE
United States Patent and Trademark Office
Address: COMMISSIONER FOR PATENTS
P.O. Box 1450
Alexandria, Virginia 22313-1450
www.uspto.gov

APPLICATION NUMBER	FILING or 371(c) DATE	GRP ART UNIT	FIL FEE REC'D	ATTY.DOCKET.NO	TOT CLAIMS	IND CLAIMS
15/268,728	09/19/2016	2181	5480	DP-322037 CON	30	10

CONFIRMATION NO. 4506

UPDATED FILING RECEIPT

22851
Delphi Technologies, Inc.
P.O. Box 5052
M/C 483-400-402
Troy, MI 48007-5052

OC000000088494828

Date Mailed: 01/17/2017

Receipt is acknowledged of this non-provisional patent application. The application will be taken up for examination in due course. Applicant will be notified as to the results of the examination. Any correspondence concerning the application must include the following identification information: the U.S. APPLICATION NUMBER, FILING DATE, NAME OF APPLICANT, and TITLE OF INVENTION. Fees transmitted by check or draft are subject to collection. Please verify the accuracy of the data presented on this receipt. **If an error is noted on this Filing Receipt, please submit a written request for a Filing Receipt Correction. Please provide a copy of this Filing Receipt with the changes noted thereon. If you received a "Notice to File Missing Parts" for this application, please submit any corrections to this Filing Receipt with your reply to the Notice. When the USPTO processes the reply to the Notice, the USPTO will generate another Filing Receipt incorporating the requested corrections**

Inventor(s)

Robert M. Voto, Clarkston, MI;
Shyambabu Yeda, Rochester Hills, MI;
Craig Petku, Clarkston, MI;

Applicant(s)

DELPHI TECHNOLOGIES, INC., TROY, MI;

Power of Attorney: The patent practitioners associated with Customer Number 22851

Domestic Priority data as claimed by applicant

This application is a CON of 14/487,947 09/16/2014 PAT 9460037
which claims benefit of 61/882,915 09/26/2013

Foreign Applications for which priority is claimed (You may be eligible to benefit from the **Patent Prosecution Highway** program at the USPTO. Please see http://www.uspto.gov for more information.) - None.
Foreign application information must be provided in an Application Data Sheet in order to constitute a claim to foreign priority. See 37 CFR 1.55 and 1.76.

Permission to Access Application via Priority Document Exchange: Yes

Permission to Access Search Results: Yes

Applicant may provide or rescind an authorization for access using Form PTO/SB/39 or Form PTO/SB/69 as appropriate.

If Required, Foreign Filing License Granted:

Microchip Ex. 1004, p. 188
Microchip v. Aptiv
IPR2024-00558

The country code and number of your priority application, to be used for filing abroad under the Paris Convention, is **US 15/268,728**

Projected Publication Date: Not Applicable

Non-Publication Request: No

Early Publication Request: No
Title

FLEXIBLE MOBILE DEVICE CONNECTIVITY TO AUTOMOTIVE SYSTEMS WITH UBS HUBS

Preliminary Class

710

Statement under 37 CFR 1.55 or 1.78 for AIA (First Inventor to File) Transition Applications: No

PROTECTING YOUR INVENTION OUTSIDE THE UNITED STATES

Since the rights granted by a U.S. patent extend only throughout the territory of the United States and have no effect in a foreign country, an inventor who wishes patent protection in another country must apply for a patent in a specific country or in regional patent offices. Applicants may wish to consider the filing of an international application under the Patent Cooperation Treaty (PCT). An international (PCT) application generally has the same effect as a regular national patent application in each PCT-member country. The PCT process **simplifies** the filing of patent applications on the same invention in member countries, but **does not result** in a grant of "an international patent" and does not eliminate the need of applicants to file additional documents and fees in countries where patent protection is desired.

Almost every country has its own patent law, and a person desiring a patent in a particular country must make an application for patent in that country in accordance with its particular laws. Since the laws of many countries differ in various respects from the patent law of the United States, applicants are advised to seek guidance from specific foreign countries to ensure that patent rights are not lost prematurely.

Applicants also are advised that in the case of inventions made in the United States, the Director of the USPTO must issue a license before applicants can apply for a patent in a foreign country. The filing of a U.S. patent application serves as a request for a foreign filing license. The application's filing receipt contains further information and guidance as to the status of applicant's license for foreign filing.

Applicants may wish to consult the USPTO booklet, "General Information Concerning Patents" (specifically, the section entitled "Treaties and Foreign Patents") for more information on timeframes and deadlines for filing foreign patent applications. The guide is available either by contacting the USPTO Contact Center at 800-786-9199, or it can be viewed on the USPTO website at http://www.uspto.gov/web/offices/pac/doc/general/index.html.

For information on preventing theft of your intellectual property (patents, trademarks and copyrights), you may wish to consult the U.S. Government website, http://www.stopfakes.gov. Part of a Department of Commerce initiative, this website includes self-help "toolkits" giving innovators guidance on how to protect intellectual property in specific countries such as China, Korea and Mexico. For questions regarding patent enforcement issues, applicants may call the U.S. Government hotline at 1-866-999-HALT (1-866-999-4258).

Microchip Ex. 1004, p. 189
Microchip v. Aptiv
IPR2024-00558

LICENSE FOR FOREIGN FILING UNDER

Title 35, United States Code, Section 184

Title 37, Code of Federal Regulations, 5.11 & 5.15

GRANTED

The applicant has been granted a license under 35 U.S.C. 184, if the phrase "IF REQUIRED, FOREIGN FILING LICENSE GRANTED" followed by a date appears on this form. Such licenses are issued in all applications where the conditions for issuance of a license have been met, regardless of whether or not a license may be required as set forth in 37 CFR 5.15. The scope and limitations of this license are set forth in 37 CFR 5.15(a) unless an earlier license has been issued under 37 CFR 5.15(b). The license is subject to revocation upon written notification. The date indicated is the effective date of the license, unless an earlier license of similar scope has been granted under 37 CFR 5.13 or 5.14.

This license is to be retained by the licensee and may be used at any time on or after the effective date thereof unless it is revoked. This license is automatically transferred to any related applications(s) filed under 37 CFR 1.53(d). This license is not retroactive.

The grant of a license does not in any way lessen the responsibility of a licensee for the security of the subject matter as imposed by any Government contract or the provisions of existing laws relating to espionage and the national security or the export of technical data. Licensees should apprise themselves of current regulations especially with respect to certain countries, of other agencies, particularly the Office of Defense Trade Controls, Department of State (with respect to Arms, Munitions and Implements of War (22 CFR 121-128)); the Bureau of Industry and Security, Department of Commerce (15 CFR parts 730-774); the Office of Foreign AssetsControl, Department of Treasury (31 CFR Parts 500+) and the Department of Energy.

NOT GRANTED

No license under 35 U.S.C. 184 has been granted at this time, if the phrase "IF REQUIRED, FOREIGN FILING LICENSE GRANTED" DOES NOT appear on this form. Applicant may still petition for a license under 37 CFR 5.12, if a license is desired before the expiration of 6 months from the filing date of the application. If 6 months has lapsed from the filing date of this application and the licensee has not received any indication of a secrecy order under 35 U.S.C. 181, the licensee may foreign file the application pursuant to 37 CFR 5.15(b).

SelectUSA

The United States represents the largest, most dynamic marketplace in the world and is an unparalleled location for business investment, innovation, and commercialization of new technologies. The U.S. offers tremendous resources and advantages for those who invest and manufacture goods here. Through SelectUSA, our nation works to promote and facilitate business investment. SelectUSA provides information assistance to the international investor community; serves as an ombudsman for existing and potential investors; advocates on behalf of U.S. cities, states, and regions competing for global investment; and counsels U.S. economic development organizations on investment attraction best practices. To learn more about why the United States is the best country in the world to develop technology, manufacture products, deliver services, and grow your business, visit http://www.SelectUSA.gov or call +1-202-482-6800.

PART B - FEE(S) TRANSMITTAL

Complete and send this form, together with applicable fee(s), to: Mail **Mail Stop ISSUE FEE**
Commissioner for Patents
P.O. Box 1450
Alexandria, Virginia 22313-1450
or Fax (571)-273-2885

INSTRUCTIONS: This form should be used for transmitting the ISSUE FEE and PUBLICATION FEE (if required). Blocks 1 through 5 should be completed where appropriate. All further correspondence including the Patent, advance orders and notification of maintenance fees will be mailed to the current correspondence address as indicated unless corrected below or directed otherwise in Block 1, by (a) specifying a new correspondence address; and/or (b) indicating a separate "FEE ADDRESS" for maintenance fee notifications.

CURRENT CORRESPONDENCE ADDRESS (Note: Use Block 1 for any change of address)

22851 7590 11/25/2016
Delphi Technologies, Inc.
P.O. Box 5052
M/C 483-400-402
Troy, MI 48007-5052

Note: A certificate of mailing can only be used for domestic mailings of the Fee(s) Transmittal. This certificate cannot be used for any other accompanying papers. Each additional paper, such as an assignment or formal drawing, must have its own certificate of mailing or transmission.

Certificate of Mailing or Transmission
I hereby certify that this Fee(s) Transmittal is being deposited with the United States Postal Service with sufficient postage for first class mail in an envelope addressed to the Mail Stop ISSUE FEE address above, or being facsimile transmitted to the USPTO (571) 273-2885, on the date indicated below.

(Depositor's name)
(Signature)
(Date)

APPLICATION NO.	FILING DATE	FIRST NAMED INVENTOR	ATTORNEY DOCKET NO.	CONFIRMATION NO.
15/268,728	09/19/2016	Robert M. Voto	DP-322037 CON	4506

TITLE OF INVENTION: FLEXIBLE MOBILE DEVICE CONNECTIVITY TO AUTOMOTIVE SYSTEMS WITH UBS HUBS

APPLN. TYPE	ENTITY STATUS	ISSUE FEE DUE	PUBLICATION FEE DUE	PREV. PAID ISSUE FEE	TOTAL FEE(S) DUE	DATE DUE
nonprovisional	UNDISCOUNTED	$960	$0	$0	$960	02/27/2017

EXAMINER	ART UNIT	CLASS-SUBCLASS
UNELUS, ERNEST	2181	710-014000

1. Change of correspondence address or indication of "Fee Address" (37 CFR 1.363).
- ☐ Change of correspondence address (or Change of Correspondence Address form PTO/SB/122) attached.
- ☐ "Fee Address" indication (or "Fee Address" Indication form PTO/SB/47; Rev 03-02 or more recent) attached. **Use of a Customer Number is required.**

2. For printing on the patent front page, list
(1) The names of up to 3 registered patent attorneys or agents OR, alternatively,
(2) The name of a single firm (having as a member a registered attorney or agent) and the names of up to 2 registered patent attorneys or agents. If no name is listed, no name will be printed.

1 Robert J. Myers
2 .....
3 .....

3. ASSIGNEE NAME AND RESIDENCE DATA TO BE PRINTED ON THE PATENT (print or type)

PLEASE NOTE: Unless an assignee is identified below, no assignee data will appear on the patent. If an assignee is identified below, the document has been filed for recordation as set forth in 37 CFR 3.11. Completion of this form is NOT a substitute for filing an assignment.

(A) NAME OF ASSIGNEE: Delphi Technologies, Inc.
(B) RESIDENCE: (CITY and STATE OR COUNTRY): Troy, MI

Please check the appropriate assignee category or categories (will not be printed on the patent): ☐ Individual ☒ Corporation or other private group entity ☐ Government

4a. The following fee(s) are submitted:
- ☒ Issue Fee
- ☐ Publication Fee (No small entity discount permitted)
- ☐ Advance Order - # of Copies .....

4b. Payment of Fee(s): **(Please first reapply any previously paid issue fee shown above)**
- ☐ A check is enclosed.
- ☐ Payment by credit card. Form PTO-2038 is attached.
- ☒ The director is hereby authorized to charge the required fee(s), any deficiency, or credits any overpayment, to Deposit Account Number 500551 (enclose an extra copy of this form).

5. **Change in Entity Status** (from status indicated above)
- ☐ Applicant certifying micro entity status. See 37 CFR 1.29
- ☐ Applicant asserting small entity status. See 37 CFR 1.27
- ☐ Applicant changing to regular undiscounted fee status.

NOTE: Absent a valid certification of Micro Entity Status (see forms PTO/SB/15A and 15B), issue fee payment in the micro entity amount will not be accepted at the risk of application abandonment.

NOTE: If the application was previously under micro entity status, checking this box will be taken to be a notification of loss of entitlement to micro entity status.

NOTE: Checking this box will be taken to be a notification of loss of entitlement to small or micro entity status, as applicable.

NOTE: This form must be signed in accordance with 37 CFR 1.31 and 1.33. See 37 CFR 1.4 for signature requirements and certifications.

Authorized Signature Kandace Powell Date 24 FEB 2017

Typed or printed name Kandace Powell Registration No. .....

PTOL-85 Part B (10-13) Approved for use through 10/31/2013. OMB 0651-0033 U.S. Patent and Trademark Office; U.S. DEPARTMENT OF COMMERCE

Microchip Ex. 1004, p. 191
Microchip v. Aptiv
IPR2024-00558

Electronic Patent Application Fee Transmittal

Application Number:	15268728
Filing Date:	19-Sep-2016
Title of Invention:	FLEXIBLE MOBILE DEVICE CONNECTIVITY TO AUTOMOTIVE SYSTEMS WITH UBS HUBS
First Named Inventor/Applicant Name:	Robert M. Voto
Filer:	Lawrence Dean Hazelton/Kandace Powell
Attorney Docket Number:	DP-322037 CON

Filed as Large Entity

Filing Fees for Utility under 35 USC 111(a)

Description	Fee Code	Quantity	Amount	Sub-Total in USD($)
Basic Filing:				
Pages:				
Claims:				
Miscellaneous-Filing:				
Petition:				
Patent-Appeals-and-Interference:				
Post-Allowance-and-Post-Issuance:				
UTILITY APPL ISSUE FEE	1501	1	960	960

Description	Fee Code	Quantity	Amount	Sub-Total in USD($)
Extension-of-Time:				
Miscellaneous:				
			Total in USD ($)	**960**

Electronic Acknowledgement Receipt

EFS ID:	28453272
Application Number:	15268728
International Application Number:	
Confirmation Number:	4506
Title of Invention:	FLEXIBLE MOBILE DEVICE CONNECTIVITY TO AUTOMOTIVE SYSTEMS WITH UBS HUBS
First Named Inventor/Applicant Name:	Robert M. Voto
Customer Number:	22851
Filer:	Lawrence Dean Hazelton/Kandace Powell
Filer Authorized By:	Lawrence Dean Hazelton
Attorney Docket Number:	DP-322037 CON
Receipt Date:	24-FEB-2017
Filing Date:	19-SEP-2016
Time Stamp:	13:01:58
Application Type:	Utility under 35 USC 111(a)

Payment information:

Submitted with Payment	yes
Payment Type	DA
Payment was successfully received in RAM	$960
RAM confirmation Number	022417INTEFSW00012438500831
Deposit Account	500831
Authorized User	Kandace Powell

The Director of the USPTO is hereby authorized to charge indicated fees and credit any overpayment as follows:

37 CFR 1.20 (Post Issuance fees)

37 CFR 1.21 (Miscellaneous fees and charges)

File Listing:

Document Number	Document Description	File Name	File Size(Bytes)/ Message Digest	Multi Part /.zip	Pages (if appl.)
1	Issue Fee Payment (PTO-85B)	DP322073CON_PTOL_85.pdf	142543 03aaab11cd1d6a290bd9a27e06d7579460161049	no	1
Warnings:					
The page size in the PDF is too large. The pages should be 8.5 x 11 or A4. If this PDF is submitted, the pages will be resized upon entry into the Image File Wrapper and may affect subsequent processing					
Information:					
2	Fee Worksheet (SB06)	fee-info.pdf	30919 07535106ce1eed63c35dc5a11b4f32b3971d75ba	no	2
Warnings:					
Information:					
		Total Files Size (in bytes):	173462		

This Acknowledgement Receipt evidences receipt on the noted date by the USPTO of the indicated documents, characterized by the applicant, and including page counts, where applicable. It serves as evidence of receipt similar to a Post Card, as described in MPEP 503.

New Applications Under 35 U.S.C. 111
If a new application is being filed and the application includes the necessary components for a filing date (see 37 CFR 1.53(b)-(d) and MPEP 506), a Filing Receipt (37 CFR 1.54) will be issued in due course and the date shown on this Acknowledgement Receipt will establish the filing date of the application.

National Stage of an International Application under 35 U.S.C. 371
If a timely submission to enter the national stage of an international application is compliant with the conditions of 35 U.S.C. 371 and other applicable requirements a Form PCT/DO/EO/903 indicating acceptance of the application as a national stage submission under 35 U.S.C. 371 will be issued in addition to the Filing Receipt, in due course.

New International Application Filed with the USPTO as a Receiving Office
If a new international application is being filed and the international application includes the necessary components for an international filing date (see PCT Article 11 and MPEP 1810), a Notification of the International Application Number and of the International Filing Date (Form PCT/RO/105) will be issued in due course, subject to prescriptions concerning national security, and the date shown on this Acknowledgement Receipt will establish the international filing date of the application.

UNITED STATES PATENT AND TRADEMARK OFFICE

UNITED STATES DEPARTMENT OF COMMERCE
United States Patent and Trademark Office
Address: COMMISSIONER FOR PATENTS
P.O. Box 1450
Alexandria, Virginia 22313-1450
www.uspto.gov

APPLICATION NO.	ISSUE DATE	PATENT NO.	ATTORNEY DOCKET NO.	CONFIRMATION NO.
15/268,728	04/11/2017	9619420	DP-322037 CON	4506

22851 7590 03/22/2017
Delphi Technologies, Inc.
P.O. Box 5052
M/C 483-400-402
Troy, MI 48007-5052

ISSUE NOTIFICATION

The projected patent number and issue date are specified above.

Determination of Patent Term Adjustment under 35 U.S.C. 154 (b)
(application filed on or after May 29, 2000)

The Patent Term Adjustment is 0 day(s). Any patent to issue from the above-identified application will include an indication of the adjustment on the front page.

If a Continued Prosecution Application (CPA) was filed in the above-identified application, the filing date that determines Patent Term Adjustment is the filing date of the most recent CPA.

Applicant will be able to obtain more detailed information by accessing the Patent Application Information Retrieval (PAIR) WEB site (http://pair.uspto.gov).

Any questions regarding the Patent Term Extension or Adjustment determination should be directed to the Office of Patent Legal Administration at (571)-272-7702. Questions relating to issue and publication fee payments should be directed to the Application Assistance Unit (AAU) of the Office of Data Management (ODM) at (571)-272-4200.

APPLICANT(s) (Please see PAIR WEB site http://pair.uspto.gov for additional applicants):

Robert M. Voto, Clarkston, MI;
DELPHI TECHNOLOGIES, INC., TROY, MI;
Shyambabu Yeda, Rochester Hills, MI;
Craig Petku, Clarkston, MI;

The United States represents the largest, most dynamic marketplace in the world and is an unparalleled location for business investment, innovation, and commercialization of new technologies. The USA offers tremendous resources and advantages for those who invest and manufacture goods here. Through SelectUSA, our nation works to encourage and facilitate business investment. To learn more about why the USA is the best country in the world to develop technology, manufacture products, and grow your business, visit SelectUSA.gov.

IR103 (Rev. 10/09)

PATENT ASSIGNMENT COVER SHEET

Electronic Version v1.1
Stylesheet Version v1.2

EPAS ID: PAT5157768

SUBMISSION TYPE:	NEW ASSIGNMENT
NATURE OF CONVEYANCE:	ASSIGNMENT

CONVEYING PARTY DATA

Name	Execution Date
DELPHI TECHNOLOGIES INC.	01/01/2018

RECEIVING PARTY DATA

Name:	APTIV TECHNOLOGIES LIMITED
Street Address:	ERIN COURT, BISHOP'S COURT HILL
City:	ST. MICHAEL
State/Country:	BARBADOS

PROPERTY NUMBERS Total: 966

Property Type	Number
Patent Number:	6646845
Patent Number:	6286222
Patent Number:	6401047
Patent Number:	6286221
Patent Number:	6358104
Patent Number:	6246936
Patent Number:	6329779
Patent Number:	6500030
Patent Number:	6575607
Patent Number:	6441726
Patent Number:	6447131
Patent Number:	6407696
Patent Number:	6380757
Patent Number:	6305957
Patent Number:	6356827
Patent Number:	6408784
Patent Number:	6434486
Patent Number:	6404157
Patent Number:	6302552
Patent Number:	6422062
Patent Number:	6404328

Property Type	Number
Patent Number:	6469659
Patent Number:	6384355
Patent Number:	6559763
Patent Number:	6613468
Patent Number:	6678166
Patent Number:	6464050
Patent Number:	6662912
Patent Number:	6366153
Patent Number:	6479766
Patent Number:	6723979
Patent Number:	6447132
Patent Number:	6620535
Patent Number:	6692859
Patent Number:	7037615
Patent Number:	6553294
Patent Number:	6828559
Patent Number:	6435530
Patent Number:	6542802
Patent Number:	6453224
Patent Number:	6548914
Patent Number:	7000946
Patent Number:	6542792
Patent Number:	6485337
Patent Number:	6424898
Patent Number:	6554318
Patent Number:	6874378
Patent Number:	6434958
Patent Number:	6873714
Patent Number:	6650252
Patent Number:	6644689
Patent Number:	6583753
Patent Number:	6864015
Patent Number:	7085687
Patent Number:	6761568
Patent Number:	6492938
Patent Number:	6624503
Patent Number:	6850825
Patent Number:	6556166

Property Type	Number
Patent Number:	7003032
Patent Number:	8197981
Patent Number:	6533230
Patent Number:	7279243
Patent Number:	7025903
Patent Number:	6860224
Patent Number:	6767411
Patent Number:	6561305
Patent Number:	6564694
Patent Number:	6749038
Patent Number:	6762427
Patent Number:	6438477
Patent Number:	6438476
Patent Number:	6566616
Patent Number:	6578871
Patent Number:	6662094
Patent Number:	6868745
Patent Number:	7352355
Patent Number:	6753780
Patent Number:	6552294
Patent Number:	6605877
Patent Number:	6897819
Patent Number:	6927674
Patent Number:	6897770
Patent Number:	6362731
Patent Number:	6668221
Patent Number:	6714848
Patent Number:	6722922
Patent Number:	6888265
Patent Number:	6692316
Patent Number:	6356851
Patent Number:	6936989
Patent Number:	6650978
Patent Number:	6910827
Patent Number:	6905901
Patent Number:	6803743
Patent Number:	6932769
Patent Number:	6837751

Property Type	Number
Patent Number:	6925114
Patent Number:	6663250
Patent Number:	6859144
Patent Number:	7000948
Patent Number:	6683534
Patent Number:	6818842
Patent Number:	6669426
Patent Number:	7324715
Patent Number:	7037349
Patent Number:	7178139
Patent Number:	6847001
Patent Number:	6794987
Patent Number:	7598846
Patent Number:	7133752
Patent Number:	7095501
Patent Number:	6889146
Patent Number:	7252559
Patent Number:	6833535
Patent Number:	6984466
Patent Number:	7435490
Patent Number:	7001682
Patent Number:	7147953
Patent Number:	7144644
Patent Number:	6942942
Patent Number:	6967064
Patent Number:	7279246
Patent Number:	6921596
Patent Number:	7410016
Patent Number:	7422812
Patent Number:	7001685
Patent Number:	7537849
Patent Number:	7131264
Patent Number:	7582375
Patent Number:	7008716
Patent Number:	6997278
Patent Number:	7512461
Patent Number:	7131665
Patent Number:	6739889

Property Type	Number
Patent Number:	7202792
Patent Number:	7024294
Patent Number:	7201984
Patent Number:	7412058
Patent Number:	7606327
Patent Number:	6824406
Patent Number:	6886417
Patent Number:	7120554
Patent Number:	7064721
Patent Number:	7162153
Patent Number:	6917890
Patent Number:	7021811
Patent Number:	7457699
Patent Number:	7217300
Patent Number:	7575826
Patent Number:	7166001
Patent Number:	7002699
Patent Number:	7350954
Patent Number:	7280662
Patent Number:	7523237
Patent Number:	7308347
Patent Number:	6987229
Patent Number:	7015709
Patent Number:	6950629
Patent Number:	7261604
Patent Number:	7231177
Patent Number:	7190325
Patent Number:	7206679
Patent Number:	6925370
Patent Number:	7499283
Patent Number:	7736903
Patent Number:	7252400
Patent Number:	6966233
Patent Number:	6927678
Patent Number:	7441257
Patent Number:	7351102
Patent Number:	6935687
Patent Number:	7163075

Property Type	Number
Patent Number:	7449648
Patent Number:	7191269
Patent Number:	7149089
Patent Number:	7366643
Patent Number:	7875997
Patent Number:	7230998
Patent Number:	7386056
Patent Number:	7656966
Patent Number:	7645532
Patent Number:	7215713
Patent Number:	7280613
Patent Number:	7751497
Patent Number:	7657225
Patent Number:	7230992
Patent Number:	6896524
Patent Number:	7095569
Patent Number:	7331671
Patent Number:	7362885
Patent Number:	7512159
Patent Number:	7785725
Patent Number:	7473228
Patent Number:	7499696
Patent Number:	7326482
Patent Number:	7179558
Patent Number:	7009551
Patent Number:	7049859
Patent Number:	7021952
Patent Number:	7156697
Patent Number:	7039514
Patent Number:	7306755
Patent Number:	7997542
Patent Number:	7423665
Patent Number:	7700044
Patent Number:	7504839
Patent Number:	7697766
Patent Number:	7674538
Patent Number:	7306871
Patent Number:	7689008

Property Type	Number
Patent Number:	7294827
Patent Number:	7623966
Patent Number:	7095567
Patent Number:	7254820
Patent Number:	7323686
Patent Number:	7008270
Patent Number:	7818989
Patent Number:	7424354
Patent Number:	7364301
Patent Number:	7499779
Patent Number:	7660655
Patent Number:	7575665
Patent Number:	7623950
Patent Number:	7230523
Patent Number:	7791670
Patent Number:	7697886
Patent Number:	7777778
Patent Number:	7026549
Patent Number:	7148482
Patent Number:	7146276
Patent Number:	7385520
Patent Number:	7403845
Patent Number:	7693481
Patent Number:	7050908
Patent Number:	7781123
Patent Number:	7564907
Patent Number:	7720184
Patent Number:	7590399
Patent Number:	7830983
Patent Number:	7350934
Patent Number:	8642345
Patent Number:	8455262
Patent Number:	7279132
Patent Number:	7478875
Patent Number:	7937672
Patent Number:	7773697
Patent Number:	7822149
Patent Number:	7439866

Property Type	Number
Patent Number:	7269483
Patent Number:	7474262
Patent Number:	7119705
Patent Number:	7176390
Patent Number:	7539661
Patent Number:	7570170
Patent Number:	7324191
Patent Number:	7486835
Patent Number:	7403848
Patent Number:	7422819
Patent Number:	7094081
Patent Number:	7552792
Patent Number:	7798276
Patent Number:	7295771
Patent Number:	7288009
Patent Number:	7325870
Patent Number:	7410212
Patent Number:	7224270
Patent Number:	7048584
Patent Number:	7412314
Patent Number:	7998632
Patent Number:	7546194
Patent Number:	8218411
Patent Number:	7611327
Patent Number:	7501938
Patent Number:	7425889
Patent Number:	7327225
Patent Number:	7180257
Patent Number:	7589487
Patent Number:	7474068
Patent Number:	7538500
Patent Number:	7094099
Patent Number:	7253722
Patent Number:	7415337
Patent Number:	7422283
Patent Number:	7623594
Patent Number:	7352145
Patent Number:	8658013

Property Type	Number
Patent Number:	7176776
Patent Number:	7372055
Patent Number:	7492962
Patent Number:	7348880
Patent Number:	7463161
Patent Number:	7474264
Patent Number:	7324043
Patent Number:	7245261
Patent Number:	7436270
Patent Number:	7861517
Patent Number:	7349783
Patent Number:	7322392
Patent Number:	7944967
Patent Number:	7828478
Patent Number:	7710249
Patent Number:	7858214
Patent Number:	7351973
Patent Number:	7480351
Patent Number:	7706978
Patent Number:	7931707
Patent Number:	7472007
Patent Number:	7528731
Patent Number:	7252553
Patent Number:	7438152
Patent Number:	7548270
Patent Number:	7580325
Patent Number:	7918381
Patent Number:	8168347
Patent Number:	7423540
Patent Number:	7310190
Patent Number:	7505841
Patent Number:	7204716
Patent Number:	7241156
Patent Number:	8042631
Patent Number:	7657994
Patent Number:	7659639
Patent Number:	7351098
Patent Number:	7650034

Property Type	Number
Patent Number:	7742621
Patent Number:	7201595
Patent Number:	7749012
Patent Number:	7267583
Patent Number:	7558555
Patent Number:	7468660
Patent Number:	7439458
Patent Number:	7462795
Patent Number:	7697913
Patent Number:	7468673
Patent Number:	7217891
Patent Number:	7876926
Patent Number:	7676892
Patent Number:	7448924
Patent Number:	7610250
Patent Number:	7689325
Patent Number:	7710333
Patent Number:	7675820
Patent Number:	7565126
Patent Number:	7578593
Patent Number:	7477181
Patent Number:	7635443
Patent Number:	7594629
Patent Number:	7371115
Patent Number:	7676087
Patent Number:	7351073
Patent Number:	7347738
Patent Number:	7332674
Patent Number:	7347743
Patent Number:	7646422
Patent Number:	7331831
Patent Number:	7745771
Patent Number:	7179136
Patent Number:	7396255
Patent Number:	7835834
Patent Number:	7868828
Patent Number:	7940955
Patent Number:	7370970

Property Type	Number
Patent Number:	7439507
Patent Number:	7351089
Patent Number:	7512516
Patent Number:	7278890
Patent Number:	8356682
Patent Number:	7758989
Patent Number:	7700215
Patent Number:	7201587
Patent Number:	7266469
Patent Number:	7423224
Patent Number:	7917111
Patent Number:	7687720
Patent Number:	7408116
Patent Number:	7438585
Patent Number:	7534962
Patent Number:	7771884
Patent Number:	8034499
Patent Number:	7759901
Patent Number:	7413479
Patent Number:	7735920
Patent Number:	7675296
Patent Number:	7804796
Patent Number:	7615713
Patent Number:	7805231
Patent Number:	7410114
Patent Number:	7645943
Patent Number:	7438497
Patent Number:	7726985
Patent Number:	7972422
Patent Number:	7384309
Patent Number:	7503793
Patent Number:	7434481
Patent Number:	8545153
Patent Number:	7800344
Patent Number:	7408123
Patent Number:	7940962
Patent Number:	7668525
Patent Number:	7618057

Property Type	Number
Patent Number:	8988884
Patent Number:	7733659
Patent Number:	8087165
Patent Number:	8284559
Patent Number:	8035976
Patent Number:	8493739
Patent Number:	8498126
Patent Number:	8570757
Patent Number:	8625292
Patent Number:	8731862
Patent Number:	8477509
Patent Number:	8593821
Patent Number:	8599568
Patent Number:	8625293
Patent Number:	8982561
Patent Number:	8947860
Patent Number:	8724335
Patent Number:	8830687
Patent Number:	8749988
Patent Number:	9119288
Patent Number:	9013881
Patent Number:	9237683
Patent Number:	9173332
Patent Number:	7422480
Patent Number:	7598455
Patent Number:	7710236
Patent Number:	7864544
Patent Number:	7635212
Patent Number:	7588466
Patent Number:	7331801
Patent Number:	7701321
Patent Number:	7617066
Patent Number:	8391780
Patent Number:	8011936
Patent Number:	7753713
Patent Number:	7498896
Patent Number:	7876204
Patent Number:	7601019

Property Type	Number
Patent Number:	7485012
Patent Number:	7957333
Patent Number:	7805120
Patent Number:	8055445
Patent Number:	7970175
Patent Number:	8104173
Patent Number:	7365102
Patent Number:	8199198
Patent Number:	7889234
Patent Number:	7523679
Patent Number:	7679378
Patent Number:	8045500
Patent Number:	8013539
Patent Number:	8116711
Patent Number:	7658642
Patent Number:	7790983
Patent Number:	7632118
Patent Number:	7869533
Patent Number:	7534138
Patent Number:	7636064
Patent Number:	7864118
Patent Number:	7641511
Patent Number:	7692096
Patent Number:	7674972
Patent Number:	8008589
Patent Number:	7963787
Patent Number:	8046135
Patent Number:	7510407
Patent Number:	7901820
Patent Number:	8050460
Patent Number:	7639171
Patent Number:	7932835
Patent Number:	7903629
Patent Number:	7609530
Patent Number:	7708919
Patent Number:	8055020
Patent Number:	8446381
Patent Number:	7876106

Property Type	Number
Patent Number:	8190139
Patent Number:	8116524
Patent Number:	8155380
Patent Number:	8051877
Patent Number:	8047860
Patent Number:	8400261
Patent Number:	7749031
Patent Number:	7868251
Patent Number:	8027168
Patent Number:	8180527
Patent Number:	8022834
Patent Number:	8045337
Patent Number:	8053128
Patent Number:	8115676
Patent Number:	7914278
Patent Number:	7651346
Patent Number:	7752925
Patent Number:	9276267
Patent Number:	8421641
Patent Number:	8237455
Patent Number:	7896435
Patent Number:	7757997
Patent Number:	7658645
Patent Number:	7668690
Patent Number:	8198992
Patent Number:	8092061
Patent Number:	8107915
Patent Number:	7780485
Patent Number:	7635286
Patent Number:	8052492
Patent Number:	7806007
Patent Number:	8094001
Patent Number:	7727022
Patent Number:	8164911
Patent Number:	8681507
Patent Number:	9042119
Patent Number:	9854683
Patent Number:	7722416

Property Type	Number
Patent Number:	8158909
Patent Number:	8249798
Patent Number:	7641499
Patent Number:	7896952
Patent Number:	7727020
Patent Number:	8091960
Patent Number:	7960652
Patent Number:	7794274
Patent Number:	7880480
Patent Number:	8154394
Patent Number:	8011253
Patent Number:	8499644
Patent Number:	8184856
Patent Number:	8092245
Patent Number:	8049174
Patent Number:	8213928
Patent Number:	7810444
Patent Number:	8760886
Patent Number:	8264856
Patent Number:	9237685
Patent Number:	8004212
Patent Number:	8004400
Patent Number:	8456177
Patent Number:	7855030
Patent Number:	7891260
Patent Number:	8477513
Patent Number:	9042467
Patent Number:	8232017
Patent Number:	9692079
Patent Number:	9356307
Patent Number:	8604968
Patent Number:	9063230
Patent Number:	9271430
Patent Number:	8164045
Patent Number:	7726972
Patent Number:	8336351
Patent Number:	8660737
Patent Number:	8011598

Property Type	Number
Patent Number:	8224623
Patent Number:	8500287
Patent Number:	8124037
Patent Number:	7833674
Patent Number:	8457844
Patent Number:	8489283
Patent Number:	8377705
Patent Number:	8360803
Patent Number:	8022346
Patent Number:	8500194
Patent Number:	8266798
Patent Number:	8350684
Patent Number:	8363957
Patent Number:	7932772
Patent Number:	8207796
Patent Number:	8564423
Patent Number:	7980872
Patent Number:	8375575
Patent Number:	9456531
Patent Number:	7931479
Patent Number:	8836538
Patent Number:	7905755
Patent Number:	8598475
Patent Number:	8400323
Patent Number:	8438862
Patent Number:	8816995
Patent Number:	8259952
Patent Number:	8837140
Patent Number:	8105113
Patent Number:	8219286
Patent Number:	8259962
Patent Number:	8466438
Patent Number:	9112219
Patent Number:	8420278
Patent Number:	8833945
Patent Number:	8129951
Patent Number:	8277055
Patent Number:	8920993

Property Type	Number
Patent Number:	7955104
Patent Number:	8305773
Patent Number:	9125293
Patent Number:	8379769
Patent Number:	8599971
Patent Number:	8646176
Patent Number:	8713771
Patent Number:	8043106
Patent Number:	8181343
Patent Number:	9229531
Patent Number:	8757825
Patent Number:	9063560
Patent Number:	8641142
Patent Number:	8650351
Patent Number:	8573994
Patent Number:	8488303
Patent Number:	8267702
Patent Number:	8558713
Patent Number:	9111669
Patent Number:	9063327
Patent Number:	8813579
Patent Number:	9322724
Patent Number:	8287306
Patent Number:	8539283
Patent Number:	8362992
Patent Number:	8305678
Patent Number:	8333622
Patent Number:	8363325
Patent Number:	8279510
Patent Number:	8480798
Patent Number:	9052736
Patent Number:	8440358
Patent Number:	8235744
Patent Number:	8926107
Patent Number:	8832934
Patent Number:	8210864
Patent Number:	8548407
Patent Number:	8277243

Property Type	Number
Patent Number:	D669033
Patent Number:	8323046
Patent Number:	8333603
Patent Number:	8038455
Patent Number:	8833185
Patent Number:	9190224
Patent Number:	8442425
Patent Number:	8441394
Patent Number:	8387457
Patent Number:	9839152
Patent Number:	8408765
Patent Number:	9227513
Patent Number:	8559981
Patent Number:	8579240
Patent Number:	8398282
Patent Number:	9172177
Patent Number:	8197982
Patent Number:	8827744
Patent Number:	9725003
Patent Number:	8485853
Patent Number:	8585447
Patent Number:	9153834
Patent Number:	9379571
Patent Number:	9707853
Patent Number:	8379302
Patent Number:	8556666
Patent Number:	8746889
Patent Number:	8477401
Patent Number:	8610841
Patent Number:	8842043
Patent Number:	8680936
Patent Number:	8553334
Patent Number:	8613470
Patent Number:	8823641
Patent Number:	9280208
Patent Number:	9297897
Patent Number:	8947217
Patent Number:	8622774

Property Type	Number
Patent Number:	8758035
Patent Number:	8973989
Patent Number:	8412413
Patent Number:	8503088
Patent Number:	8784127
Patent Number:	9047518
Patent Number:	9690320
Patent Number:	8489316
Patent Number:	8584315
Patent Number:	9662983
Patent Number:	8659408
Patent Number:	9004954
Patent Number:	9126502
Patent Number:	9118911
Patent Number:	8884169
Patent Number:	9282655
Patent Number:	8925189
Patent Number:	9011186
Patent Number:	8882521
Patent Number:	9005490
Patent Number:	9039450
Patent Number:	9291184
Patent Number:	D680952
Patent Number:	D686984
Patent Number:	D686985
Patent Number:	9024804
Patent Number:	8712364
Patent Number:	9293745
Patent Number:	9017897
Patent Number:	9061603
Patent Number:	9236758
Patent Number:	8823551
Patent Number:	9304042
Patent Number:	9369001
Patent Number:	9715986
Patent Number:	9407038
Patent Number:	8977090
Patent Number:	8991045

Property Type	Number
Patent Number:	9042809
Patent Number:	9071016
Patent Number:	9391393
Patent Number:	9061591
Patent Number:	8992251
Patent Number:	9297892
Patent Number:	8926344
Patent Number:	8965599
Patent Number:	9622355
Patent Number:	8930045
Patent Number:	9616829
Patent Number:	9099809
Patent Number:	9114720
Patent Number:	9368910
Patent Number:	9112278
Patent Number:	9356300
Patent Number:	9455516
Patent Number:	9153879
Patent Number:	9118130
Patent Number:	9520601
Patent Number:	9698434
Patent Number:	9494024
Patent Number:	9647291
Patent Number:	9537243
Patent Number:	8992258
Patent Number:	9812717
Patent Number:	9054454
Patent Number:	9117573
Patent Number:	9099814
Patent Number:	9270055
Patent Number:	9190739
Patent Number:	9153878
Patent Number:	9960502
Patent Number:	9153889
Patent Number:	9289848
Patent Number:	9666880
Patent Number:	9172183
Patent Number:	9653845

Property Type	Number
Patent Number:	8978201
Patent Number:	9917434
Patent Number:	9928941
Patent Number:	9042717
Patent Number:	9270318
Patent Number:	9153899
Patent Number:	9379394
Patent Number:	9531020
Patent Number:	9366281
Patent Number:	9142907
Patent Number:	9362659
Patent Number:	9231124
Patent Number:	9231310
Patent Number:	9379530
Patent Number:	9397485
Patent Number:	9331413
Patent Number:	9476283
Patent Number:	9640829
Patent Number:	9321365
Patent Number:	9502911
Patent Number:	9300069
Patent Number:	9328596
Patent Number:	9568600
Patent Number:	9228882
Patent Number:	9356438
Patent Number:	9376028
Patent Number:	9227526
Patent Number:	9281619
Patent Number:	9543747
Patent Number:	9887529
Patent Number:	9310468
Patent Number:	9293812
Patent Number:	9843132
Patent Number:	9577367
Patent Number:	9541637
Patent Number:	9621874
Patent Number:	9300085
Patent Number:	9728896

Property Type	Number
Patent Number:	9362676
Patent Number:	9594155
Patent Number:	9450226
Patent Number:	9784820
Patent Number:	9407026
Patent Number:	9590348
Patent Number:	9506803
Patent Number:	9664775
Patent Number:	9395538
Patent Number:	9404774
Patent Number:	9379486
Patent Number:	9504172
Patent Number:	9472885
Patent Number:	9508344
Patent Number:	9559379
Patent Number:	9911056
Patent Number:	9862318
Patent Number:	9711898
Patent Number:	9680332
Patent Number:	9469176
Patent Number:	9691514
Patent Number:	7233769
Patent Number:	8290173
Patent Number:	8208654
Patent Number:	7937118
Patent Number:	7076204
Patent Number:	6987947
Patent Number:	7359671
Patent Number:	7603080
Patent Number:	9167057
Patent Number:	9592528
Patent Number:	9537249
Patent Number:	9711902
Patent Number:	9568344
Patent Number:	9726514
Patent Number:	9619420
Patent Number:	9460037
Patent Number:	9645962

Property Type	Number
Patent Number:	9475461
Patent Number:	9810782
Patent Number:	9698501
Patent Number:	9910151
Patent Number:	9693459
Patent Number:	9350116
Patent Number:	9455523
Patent Number:	9499202
Patent Number:	9618936
Patent Number:	9555807
Patent Number:	9470777
Patent Number:	9472899
Patent Number:	9431771
Patent Number:	9768554
Patent Number:	9705228
Patent Number:	9781361
Patent Number:	10023120
Patent Number:	9608357
Patent Number:	9493083
Patent Number:	9590367
Patent Number:	9983301
Patent Number:	9923327
Patent Number:	9493118
Patent Number:	9727056
Patent Number:	9588517
Patent Number:	9604639
Patent Number:	9594378
Patent Number:	9637120
Patent Number:	9750151
Patent Number:	9537227
Patent Number:	9787031
Patent Number:	10082168
Patent Number:	D773964
Patent Number:	D802518
Patent Number:	9914475
Patent Number:	9762003
Patent Number:	9975437
Patent Number:	10032545

Property Type	Number
Patent Number:	9541639
Patent Number:	9627785
Patent Number:	9783130
Patent Number:	9798054
Patent Number:	9863866
Patent Number:	10031624
Patent Number:	7438610
Patent Number:	9836977
Patent Number:	9762001
Patent Number:	10021469
Patent Number:	9952319
Patent Number:	9764741
Patent Number:	10037696
Patent Number:	9864374
Patent Number:	10017134
Patent Number:	9953476
Patent Number:	9898008
Patent Number:	9671785
Patent Number:	9910440
Patent Number:	9989966
Patent Number:	10025311
Patent Number:	9787002
Patent Number:	9840232
Patent Number:	9841813
Patent Number:	9653846
Patent Number:	9840253
Patent Number:	9842500
Patent Number:	9634435
Patent Number:	9634445
Patent Number:	10019014
Patent Number:	9915003
Patent Number:	9667000
Patent Number:	9758114
Patent Number:	9653859
Patent Number:	9755362
Patent Number:	9960550
Patent Number:	10090622
Patent Number:	9692153

Property Type	Number
Patent Number:	9899128
Patent Number:	10090614
Patent Number:	9929508
Patent Number:	9705225
Patent Number:	9870001
Patent Number:	9944318
Patent Number:	9927810
Patent Number:	9853396
Patent Number:	10090608
Patent Number:	10008786
Patent Number:	9780487
Patent Number:	9912101
Patent Number:	9893479
Patent Number:	10014583
Patent Number:	10026321
Patent Number:	9928939
Patent Number:	10089875
Patent Number:	10078334
Patent Number:	10031231
Patent Number:	9865968
Patent Number:	9793639
Patent Number:	9899758
Patent Number:	10021797
Patent Number:	9901018
Patent Number:	9978707
Patent Number:	9917381
Patent Number:	10037472
Patent Number:	10086809
Patent Number:	9906003
Patent Number:	9991620
Patent Number:	9917402
Patent Number:	10020599
Patent Number:	10025316
Patent Number:	9954347
Patent Number:	10028391
Patent Number:	9929509
Patent Number:	9979167
Patent Number:	10079446

Property Type	Number
Patent Number:	10017659
Patent Number:	6168445
Patent Number:	6430120
Patent Number:	6099154
Patent Number:	6087976
Patent Number:	6018131
Patent Number:	6323487
Patent Number:	6236004
Patent Number:	6161822
Patent Number:	6094160
Patent Number:	6006881
Patent Number:	6481701
Patent Number:	6157881
Patent Number:	5969599
Patent Number:	5964817
Patent Number:	6222442
Patent Number:	6219606
Patent Number:	6186486
Patent Number:	6430489
Patent Number:	6166454
Patent Number:	6898498
Patent Number:	6139351
Patent Number:	6270115
Patent Number:	6356854
Patent Number:	6414265
Patent Number:	6230494
Patent Number:	6392166
Patent Number:	6151540
Patent Number:	6420797
Patent Number:	6220876
Patent Number:	6402321
Patent Number:	6043937
Patent Number:	6236308

CORRESPONDENCE DATA

Fax Number:

Correspondence will be sent to the e-mail address first; if that is unsuccessful, it will be sent using a fax number, if provided; if that is unsuccessful, it will be sent via US Mail.

Phone: 2488131214

Email:	craig.a.baldwin@aptiv.com
Correspondent Name:	CRAIG A. BALDWIN
Address Line 1:	5725 INNOVATION DRIVE
Address Line 4:	TROY, MICHIGAN 48098

NAME OF SUBMITTER:	CRAIG A. BALDWIN
SIGNATURE:	/Craig A. Baldwin/
DATE SIGNED:	09/25/2018
	This document serves as an Oath/Declaration (37 CFR 1.63).

Total Attachments: 19

source=Confirmatory Assignment DTI to ATL Jan 1 2018 Granted Patents#page1.tif
source=Confirmatory Assignment DTI to ATL Jan 1 2018 Granted Patents#page2.tif
source=Confirmatory Assignment DTI to ATL Jan 1 2018 Granted Patents#page3.tif
source=Confirmatory Assignment DTI to ATL Jan 1 2018 Granted Patents#page4.tif
source=Confirmatory Assignment DTI to ATL Jan 1 2018 Granted Patents#page5.tif
source=Confirmatory Assignment DTI to ATL Jan 1 2018 Granted Patents#page6.tif
source=Confirmatory Assignment DTI to ATL Jan 1 2018 Granted Patents#page7.tif
source=Confirmatory Assignment DTI to ATL Jan 1 2018 Granted Patents#page8.tif
source=Confirmatory Assignment DTI to ATL Jan 1 2018 Granted Patents#page9.tif
source=Confirmatory Assignment DTI to ATL Jan 1 2018 Granted Patents#page10.tif
source=Confirmatory Assignment DTI to ATL Jan 1 2018 Granted Patents#page11.tif
source=Confirmatory Assignment DTI to ATL Jan 1 2018 Granted Patents#page12.tif
source=Confirmatory Assignment DTI to ATL Jan 1 2018 Granted Patents#page13.tif
source=Confirmatory Assignment DTI to ATL Jan 1 2018 Granted Patents#page14.tif
source=Confirmatory Assignment DTI to ATL Jan 1 2018 Granted Patents#page15.tif
source=Confirmatory Assignment DTI to ATL Jan 1 2018 Granted Patents#page16.tif
source=Confirmatory Assignment DTI to ATL Jan 1 2018 Granted Patents#page17.tif
source=Confirmatory Assignment DTI to ATL Jan 1 2018 Granted Patents#page18.tif
source=Confirmatory Assignment DTI to ATL Jan 1 2018 Granted Patents#page19.tif

Confirmatory Assignment

Whereas, **DELPHI TECHNOLOGIES, INC.**, of 5725 Delphi Drive, Troy, Michigan 48098,U.S.A, hereinafter called Assignor, is the assignee of record of the entire right, title and interest in the U.S. Patents listed in the attached **Appendix** (hereinafter the "Assigned Patent Rights") by assignment recorded with the U.S. Patent and Trademark Office; and

Whereas, **APTIV TECHNOLOGIES LIMITED**, a company incorporated in accordance with the Companies Act CAP 308 of the laws of Barbados (company no. 41949) and licensed to operate as an International Business Company, whose registered office is at Erin Court, Bishop's Court Hill, St. Michael, Barbados, hereinafter called Assignee, desires to acquire the Assignor's entire right, title, and interest including rights to recover for past infringement in the Assigned Patents.

Therefore, for valuable consideration, receipt of which is hereby acknowledged, the above named Assignor, hereby sells, assigns and transfers to the above named Assignee, its successors and assigns, the Assignor's entire right, title and interest including rights to recover for past infringement in the Assigned Patents; and Assignor will execute without further consideration all papers deemed necessary by the Assignee in connection with said Assigned Patents when called upon to do so by the Assignee.

This Assignment is made effective as of January 1, 2018.

ASSIGNOR:
Delphi Technologies, Inc.

By: _____

Name: CRAIG A. BALDWIN

Title: ASSISTANT SECRETARY

1/18

APPENDIX
List of Assigned Patent Rights

Case Number	Country	Application No.	Filing Date	Patent No.	Patent Date
DP-300140	US	09/667095	21-Sep-2000	6646845	11-Nov-2003
DP-300307	US	09/482044	13-Jan-2000	6286222	11-Sep-2001
DP-300308	US	09/482042	13-Jan-2000	6401047	04-Jun-2002
DP-300309	US	09/482043	13-Jan-2000	6286221	11-Sep-2001
DP-300384	US	09/480069	10-Jan-2000	6358104	19-Mar-2002
DP-300436	US	09/412936	05-Oct-1999	6246936	12-Jun-2001
DP-300504	US	09/648971	28-Aug-2000	6329779	11-Dec-2001
DP-301058	US	09/774273	30-Jan-2001	6500030	31-Dec-2002
DP-301097	US	09/541708	03-Apr-2000	6575607	10-Jun-2003
DP-301098	US	09/541563	03-Apr-2000	6441726	27-Aug-2002
DP-301126	US	09/648973	28-Aug-2000	6447131	10-Sep-2002
DP-301180	US	09/570691	12-May-2000	6407696	18-Jun-2002
DP-301258	US	09/586802	05-Jun-2000	6380757	30-Apr-2002
DP-301347	US	09/512725	24-Feb-2000	6305957	23-Oct-2001
DP-301395	US	09/579481	30-May-2000	6356827	12-Mar-2002
DP-301580	US	09/579482	30-May-2000	6408784	25-Jun-2002
DP-301685	US	09/648972	28-Aug-2000	6434486	13-Aug-2002
DP-301916	US	09/626996	27-Jul-2000	6404157	11-Jun-2002
DP-302024	US	09/580618	30-May-2000	6302552	16-Oct-2001
DP-302041	US	09/650131	29-Aug-2000	6422062	23-Jul-2002
DP-302088	US	09/696748	24-Oct-2000	6404328	11-Jun-2002
DP-302089	US	09/847207	03-May-2001	6469659	22-Oct-2002
DP-302127	US	09/944617	04-Sep-2001	6384355	07-May-2002
DP-302135	US	09/840553	23-Apr-2001	6559763	06-May-2003
DP-302559	US	09/747434	22-Dec-2000	6613468	02-Sep-2003
DP-302676	US	09/689720	13-Oct-2000	6678166	13-Jan-2004
DP-302729	US	09/821870	30-Mar-2001	6464050	15-Oct-2002
DP-302729	US	10/200648	22-Jul-2002	6662912	16-Dec-2003
DP-302748	US	09/567527	09-May-2000	6366153	02-Apr-2002
DP-302749	US	09/816024	26-Mar-2001	6479766	12-Nov-2002
DP-302773	US	09/793452	27-Feb-2001	6723979	20-Apr-2004
DP-302870	US	09/785978	20-Feb-2001	6447132	10-Sep-2002
DP-302891	US	09/852245	09-May-2001	6620535	16-Sep-2003
DP-302892	US	09/852246	09-May-2001	6692859	17-Feb-2004
DP-302902	US	09/781687	12-Feb-2001	7037615	02-May-2006
DP-303016	US	09/690141	16-Oct-2000	6553294	22-Apr-2003
DP-303025	US	10/294492	14-Nov-2002	6828559	07-Dec-2004
DP-303150	US	09/775301	01-Feb-2001	6435530	20-Aug-2002
DP-303229	US	09/895742	02-Jul-2001	6542802	01-Apr-2003
DP-303232	US	09/690104	16-Oct-2000	6453224	17-Sep-2002
DP-303233	US	09/688586	16-Oct-2000	6548914	15-Apr-2003
DP-303258	US	10/348356	21-Jan-2003	7000946	21-Feb-2006
DP-303289	US	09/725645	29-Nov-2000	6542792	01-Apr-2003
DP-303407	US	09/935072	22-Aug-2001	6485337	26-Nov-2002
DP-303460	US	09/888065	22-Jun-2001	6424898	23-Jul-2002
DP-303528	US	09/796237	28-Feb-2001	6554318	29-Apr-2003
DP-303565	US	10/604548	30-Jul-2003	6874378	05-Apr-2005
DP-303730	US	09/767923	24-Jan-2001	6434958	20-Aug-2002
DP-303736	US	10/078871	19-Feb-2002	6873714	29-Mar-2005
DP-303917	US	09/940945	28-Aug-2001	6650252	18-Nov-2003

DP-304272	US	10/068752	08-Feb-2002	6644689	11-Nov-2003
DP-304294	US	10/115770	03-Apr-2002	6583753	24-Jun-2003
DP-304345	US	09/907062	17-Jul-2001	6864015	08-Mar-2005
DP-304449	US	10/393027	20-Mar-2003	7085687	01-Aug-2006
DP-304589	US	10/350665	24-Jan-2003	6761568	13-Jul-2004
DP-304664	US	10/072230	11-Feb-2002	6492938	10-Dec-2002
DP-304693	US	10/106753	26-Mar-2002	6624503	23-Sep-2003
DP-304694	US	10/061786	04-Feb-2002	6850825	01-Feb-2005
DP-304695	US	10/078872	19-Feb-2002	6556166	29-Apr-2003
DP-304828	US	10/075985	15-Feb-2002	7003032	21-Feb-2006
DP-304867	US	11/095063	31-Mar-2005	8197981	12-Jun-2012
DP-304936	US	10/015112	12-Dec-2001	6533230	18-Mar-2003
DP-304959	US	11/347140	03-Feb-2006	7279243	09-Oct-2007
DP-304989	US	09/996622	29-Nov-2001	7025903	11-Apr-2006
DP-305026	US	10/068754	08-Feb-2002	6860224	01-Mar-2005
DP-305031	US	10/099861	15-Mar-2002	6767411	27-Jul-2004
DP-305060	US	09/851464	08-May-2001	6561305	13-May-2003
DP-305063	US	09/897818	29-Jun-2001	6564694	20-May-2003
DP-305090	US	10/079131	20-Feb-2002	6749038	15-Jun-2004
DP-305117	US	10/327698	20-Dec-2002	6762427	13-Jul-2004
DP-305158	US	10/083730	27-Feb-2002	6438477	20-Aug-2002
DP-305159	US	10/083729	27-Feb-2002	6438476	20-Aug-2002
DP-305214	US	10/000670	31-Oct-2001	6566616	20-May-2003
DP-305298	US	09/972638	09-Oct-2001	6578871	17-Jun-2003
DP-305537	US	10/075984	15-Feb-2002	6662094	09-Dec-2003
DP-305561	US	10/140086	07-May-2002	6868745	22-Mar-2005
DP-305608	US	10/281863	28-Oct-2002	7352355	01-Apr-2008
DP-305712	US	10/099832	15-Mar-2002	6753780	22-Jun-2004
DP-305907	US	90/007517	22-Apr-2005	6552294C1	19-Sep-2006
DP-306006	US	10/082419	26-Feb-2002	6605877	12-Aug-2003
DP-306032	US	10/670431	23-Sep-2003	6897819	24-May-2005
DP-306104	US	10/103202	21-Mar-2002	6927674	09-Aug-2005
DP-306152	US	10/042576	09-Jan-2002	6897770	24-May-2005
DP-306152	US	09/730992	06-Dec-2000	6362731	26-Mar-2002
DP-306187	US	10/154362	23-May-2002	6668221	23-Dec-2003
DP-306215	US	10/319325	13-Dec-2002	6714848	30-Mar-2004
DP-306300	US	10/112955	02-Apr-2002	6722922	20-Apr-2004
DP-306314	US	10/243615	13-Sep-2002	6888265	03-May-2005
DP-306356	US	10/122177	16-Apr-2002	6692316	17-Feb-2004
DP-306520	US	09/245260	05-Feb-1999	6356851	12-Mar-2002
DP-306615	US	10/216151	09-Aug-2002	6936989	30-Aug-2005
DP-306663	US	10/159691	31-May-2002	6650978	18-Nov-2003
DP-306974	US	10/391106	18-Mar-2003	6910827	28-Jun-2005
DP-306976	US	10/107766	27-Mar-2002	6905901	14-Jun-2005
DP-306988	US	10/264932	04-Oct-2002	6803743	12-Oct-2004
DP-307001	US	10/447306	28-May-2003	6932769	23-Aug-2005
DP-307020	US	10/205245	25-Jul-2002	6837751	04-Jan-2005
DP-307046	US	10/263017	02-Oct-2002	6925114	02-Aug-2005
DP-307054	US	10/061691	01-Feb-2002	6663250	16-Dec-2003
DP-307073	US	10/358978	05-Feb-2003	6859144	22-Feb-2005
DP-307106	US	10/718331	20-Nov-2003	7000948	21-Feb-2006
DP-307424	US	10/159661	31-May-2002	6683534	27-Jan-2004
DP-307459	US	10/325538	19-Dec-2002	6818842	16-Nov-2004
DP-307499	US	10/170888	13-Jun-2002	6669426	30-Dec-2003
DP-307520	US	10/317750	12-Dec-2002	7324715	29-Jan-2008
DP-307529	US	10/229550	28-Aug-2002	7037349	02-May-2006

DP-307541	US	10/229832	27-Aug-2002	7178139	13-Feb-2007
DP-307603	US	10/226179	22-Aug-2002	6847001	25-Jan-2005
DP-307616	US	10/186784	01-Jul-2002	6794987	21-Sep-2004
DP-307767	US	10/784638	23-Feb-2004	7598846	06-Oct-2009
DP-307853	US	10/680534	07-Oct-2003	7133752	07-Nov-2006
DP-307898	US	10/348496	21-Jan-2003	7095501	22-Aug-2006
DP-307941	US	10/653463	02-Sep-2003	6889146	03-May-2005
DP-308059	US	11/580547	13-Oct-2006	7252559	07-Aug-2007
DP-308099	US	10/377424	28-Feb-2003	6833535	21-Dec-2004
DP-308120	US	10/178829	24-Jun-2002	6984466	10-Jan-2006
DP-308121	US	11/593672	07-Nov-2006	7435490	14-Oct-2008
DP-308126	US	10/178863	24-Jun-2002	7001682	21-Feb-2006
DP-308128	US	10/178282	24-Jun-2002	7147953	12-Dec-2006
DP-308129	US	10/178825	24-Jun-2002	7144644	05-Dec-2006
DP-308130	US	10/178114	24-Jun-2002	6942942	13-Sep-2005
DP-308132	US	10/178860	24-Jun-2002	6967064	22-Nov-2005
DP-308133	US	10/178878	24-Jun-2002	7279246	09-Oct-2007
DP-308136	US	10/178808	24-Jun-2002	6921596	26-Jul-2005
DP-308137	US	10/178125	24-Jun-2002	7410016	12-Aug-2008
DP-308138	US	10/178133	24-Jun-2002	7422812	09-Sep-2008
DP-308141	US	10/357748	04-Feb-2003	7001685	21-Feb-2006
DP-308160	US	10/238093	10-Sep-2002	7537849	26-May-2009
DP-308207	US	10/353304	29-Jan-2003	7131264	07-Nov-2006
DP-308217	US	11/199533	08-Aug-2005	7582375	01-Sep-2009
DP-308223	US	10/389452	14-Mar-2003	7008716	07-Mar-2006
DP-308224	US	10/666768	18-Sep-2003	6997278	14-Feb-2006
DP-308423	US	10/722706	25-Nov-2003	7512461	31-Mar-2009
DP-308580	US	10/706001	12-Nov-2003	7131665	07-Nov-2006
DP-308638	US	10/448683	30-May-2003	6739889	25-May-2004
DP-308723	US	10/291913	11-Nov-2002	7202792	10-Apr-2007
DP-308753	US	10/653698	02-Sep-2003	7024294	04-Apr-2006
DP-308846	US	10/606849	26-Jun-2003	7201984	10-Apr-2007
DP-308877	US	10/391107	18-Mar-2003	7412058	12-Aug-2008
DP-308984	US	10/628822	28-Jul-2003	7606327	20-Oct-2009
DP-309050	US	10/606919	26-Jun-2003	6824406	30-Nov-2004
DP-309055	US	10/665095	17-Sep-2003	6886417	03-May-2005
DP-309063	US	10/804245	18-Mar-2004	7120554	10-Oct-2006
DP-309088	US	10/607661	27-Jun-2003	7064721	20-Jun-2006
DP-309154	US	10/603540	25-Jun-2003	7162153	09-Jan-2007
DP-309213	US	10/447375	29-May-2003	6917890	12-Jul-2005
DP-309214	US	10/461097	13-Jun-2003	7021811	04-Apr-2006
DP-309337	US	10/761580	21-Jan-2004	7457699	25-Nov-2008
DP-309432	US	10/607609	27-Jun-2003	7217300	15-May-2007
DP-309451	US	11/825037	03-Jul-2007	7575826	18-Aug-2009
DP-309549	US	11/019041	21-Dec-2004	7166001	23-Jan-2007
DP-309576	US	10/784648	23-Feb-2004	7002699	21-Feb-2006
DP-309644	US	11/194173	01-Aug-2005	7350954	01-Apr-2008
DP-309659	US	10/700208	03-Nov-2003	7280662	09-Oct-2007
DP-309678	US	11/098143	31-Mar-2005	7523237	21-Apr-2009
DP-309769	US	10/618952	14-Jul-2003	7308347	11-Dec-2007
DP-309772	US	10/618905	14-Jul-2003	6987229	17-Jan-2006
DP-309779	US	10/843775	12-May-2004	7015709	21-Mar-2006
DP-309795	US	10/763910	23-Jan-2004	6950629	27-Sep-2005
DP-309820	US	10/741590	22-Dec-2003	7261604	28-Aug-2007
DP-309911	US	10/714009	13-Nov-2003	7231177	12-Jun-2007
DP-309976	US	10/781608	18-Feb-2004	7190325	13-Mar-2007

DP-310048	US	10/754055	08-Jan-2004	7206679	17-Apr-2007
DP-310128	US	10/679744	06-Oct-2003	6925370	02-Aug-2005
DP-310163	US	10/902672	29-Jul-2004	7499283	03-Mar-2009
DP-310180	US	11/243556	05-Oct-2005	7736903	15-Jun-2010
DP-310191	US	10/965990	15-Oct-2004	7252400	07-Aug-2007
DP-310204	US	10/679802	06-Oct-2003	6966233	22-Nov-2005
DP-310363	US	10/643044	18-Aug-2003	6927678	09-Aug-2005
DP-310378	US	10/797417	10-Mar-2004	7441257	21-Oct-2008
DP-310617	US	11/134646	20-May-2005	7351102	01-Apr-2008
DP-310627	US	10/784649	23-Feb-2004	6935687	30-Aug-2005
DP-310630	US	10/884737	02-Jul-2004	7163075	16-Jan-2007
DP-310648	US	11/250174	13-Oct-2005	7449648	11-Nov-2008
DP-310686	US	10/903543	30-Jul-2004	7191269	13-Mar-2007
DP-310692	US	10/757226	14-Jan-2004	7149089	12-Dec-2006
DP-310734	US	10/909186	30-Jul-2004	7366643	29-Apr-2008
DP-310764	US	10/566035	05-Feb-2008	7875997	25-Jan-2011
DP-310806	US	10/847944	18-May-2004	7230998	12-Jun-2007
DP-310806	US	10/995721	22-Nov-2004	7386056	10-Jun-2008
DP-310806	US	11/789600	25-Apr-2007	7656966	02-Feb-2010
DP-310812	US	10/909577	02-Aug-2004	7645532	12-Jan-2010
DP-310815	US	10/946657	22-Sep-2004	7215713	08-May-2007
DP-310822	US	10/946678	22-Sep-2004	7280613	09-Oct-2007
DP-310823	US	11/474735	26-Jun-2006	7751497	06-Jul-2010
DP-310823	US	11/474747	26-Jun-2006	7657225	02-Feb-2010
DP-310824	US	10/995946	22-Nov-2004	7230992	12-Jun-2007
DP-310831	US	10/767989	29-Jan-2004	6896524	24-May-2005
DP-310833	US	10/831828	26-Apr-2004	7095569	22-Aug-2006
DP-310844	US	10/813192	29-Mar-2004	7331671	19-Feb-2008
DP-310845	US	10/828005	20-Apr-2004	7362885	22-Apr-2008
DP-310855	US	10/931665	01-Sep-2004	7512159	31-Mar-2009
DP-310871	US	11/003897	03-Dec-2004	7785725	31-Aug-2010
DP-310891	US	10/887502	08-Jul-2004	7473228	06-Jan-2009
DP-310926	US	10/995013	22-Nov-2004	7499696	03-Mar-2009
DP-310950	US	10/793302	04-Mar-2004	7326482	05-Feb-2008
DP-310952	US	10/892591	15-Jul-2004	7179558	20-Feb-2007
DP-310999	US	10/974346	27-Oct-2004	7009551	07-Mar-2006
DP-311125	US	10/740333	18-Dec-2003	7049859	23-May-2006
DP-311161	US	11/045841	28-Jan-2005	7021952	04-Apr-2006
DP-311162	US	11/035600	14-Jan-2005	7156697	02-Jan-2007
DP-311257	US	10/797407	10-Mar-2004	7039514	02-May-2006
DP-311280	US	11/068024	28-Feb-2005	7306755	11-Dec-2007
DP-311280	US	11/983252	08-Nov-2007	7997542	16-Aug-2011
DP-311311	US	10/734317	12-Dec-2003	7423665	09-Sep-2008
DP-311315	US	11/033677	12-Jan-2005	7700044	20-Apr-2010
DP-311364	US	10/956318	01-Oct-2004	7504839	17-Mar-2009
DP-311370	US	11/082608	17-Mar-2005	7697766	13-Apr-2010
DP-311375	US	10/793354	04-Mar-2004	7674538	09-Mar-2010
DP-311376	US	10/793303	04-Mar-2004	7306871	11-Dec-2007
DP-311385	US	11/150684	10-Jun-2005	7689008	30-Mar-2010
DP-311441	US	10/711476	21-Sep-2004	7294827	13-Nov-2007
DP-311443	US	11/056904	11-Feb-2005	7623966	24-Nov-2009
DP-311476	US	10/919163	16-Aug-2004	7095567	22-Aug-2006
DP-311560	US	11/053521	08-Feb-2005	7254820	07-Aug-2007
DP-311591	US	11/282135	18-Nov-2005	7323686	29-Jan-2008
DP-311635	US	10/999776	30-Nov-2004	7008270	07-Mar-2006
DP-311685	US	12/482508	11-Jun-2009	7818989	26-Oct-2010

DP-311693	US	10/958815	05-Oct-2004	7424354	09-Sep-2008
DP-311701	US	10/986240	11-Nov-2004	7364301	29-Apr-2008
DP-311719	US	11/238776	29-Sep-2005	7499779	03-Mar-2009
DP-311720	US	10/958749	05-Oct-2004	7660655	09-Feb-2010
DP-311725	US	11/116509	28-Apr-2005	7575665	18-Aug-2009
DP-311866	US	11/149816	09-Jun-2005	7623950	24-Nov-2009
DP-311869	US	11/031232	07-Jan-2005	7230523	12-Jun-2007
DP-311871	US	11/126606	11-May-2005	7791670	07-Sep-2010
DP-311953	US	11/132581	19-May-2005	7697886	13-Apr-2010
DP-311969	US	10/974282	27-Oct-2004	7777778	17-Aug-2010
DP-311981	US	11/051833	04-Feb-2005	7026549	11-Apr-2006
DP-311983	US	10/808835	25-Mar-2004	7148482	12-Dec-2006
DP-312070	US	10/939778	13-Sep-2004	7146276	05-Dec-2006
DP-312079	US	11/146921	06-Jun-2005	7385520	10-Jun-2008
DP-312081	US	11/146939	06-Jun-2005	7403845	22-Jul-2008
DP-312097	US	11/029144	04-Jan-2005	7693481	06-Apr-2010
DP-312098	US	11/087041	22-Mar-2005	7050908	23-May-2006
DP-312197	US	11/145647	06-Jun-2005	7781123	24-Aug-2010
DP-312230	US	11/153696	15-Jun-2005	7564907	21-Jul-2009
DP-312231	US	11/201718	11-Aug-2005	7720184	18-May-2010
DP-312232	US	11/201883	11-Aug-2005	7590399	15-Sep-2009
DP-312235	US	11/069254	01-Mar-2005	7830983	09-Nov-2010
DP-312236	US	11/122196	03-May-2005	7350934	01-Apr-2008
DP-312277	US	13/785535	05-Mar-2013	8642345	04-Feb-2014
DP-312277	US	11/903141	20-Sep-2007	8455262	04-Jun-2013
DP-312277	US	11/033703	12-Jan-2005	7279132	09-Oct-2007
DP-312329	US	11/147148	06-Jun-2005	7478875	20-Jan-2009
DP-312354	US	12/210709	15-Sep-2008	7937672	03-May-2011
DP-312427	US	11/088129	23-Mar-2005	7773697	10-Aug-2010
DP-312428	US	11/143044	02-Jun-2005	7822149	26-Oct-2010
DP-312447	US	11/199800	09-Aug-2005	7439866	21-Oct-2008
DP-312484	US	10/921722	19-Aug-2004	7269483	11-Sep-2007
DP-312498	US	11/172684	01-Jul-2005	7474262	06-Jan-2009
DP-312499	US	10/978260	30-Oct-2004	7119705	10-Oct-2006
DP-312500	US	11/070068	02-Mar-2005	7176390	13-Feb-2007
DP-312506	US	11/143054	02-Jun-2005	7539661	26-May-2009
DP-312528	US	11/147906	08-Jun-2005	7570170	04-Aug-2009
DP-312542	US	11/096532	01-Apr-2005	7324191	29-Jan-2008
DP-312606	US	11/082546	17-Mar-2005	7486835	03-Feb-2009
DP-312647	US	10/919162	16-Aug-2004	7403848	22-Jul-2008
DP-312660	US	11/158369	22-Jun-2005	7422819	09-Sep-2008
DP-312701	US	11/088420	24-Mar-2005	7094081	22-Aug-2006
DP-312707	US	11/073438	07-Mar-2005	7552792	30-Jun-2009
DP-312707	US	12/467721	18-May-2009	7798276	21-Sep-2010
DP-312716	US	11/113521	25-Apr-2005	7295771	13-Nov-2007
DP-312721	US	11/221592	08-Sep-2005	7288009	30-Oct-2007
DP-312723	US	11/222028	08-Sep-2005	7325870	05-Feb-2008
DP-312727	US	11/222229	08-Sep-2005	7410212	12-Aug-2008
DP-312733	US	11/146928	06-Jun-2005	7224270	29-May-2007
DP-312785	US	11/159908	23-Jun-2005	7048584	23-May-2006
DP-312807	US	10/940397	14-Sep-2004	7412314	12-Aug-2008
DP-312822	US	11/133512	20-May-2005	7998632	16-Aug-2011
DP-312844	US	11/330028	10-Jan-2006	7546194	09-Jun-2009
DP-312861	US	11/352110	10-Feb-2006	8218411	10-Jul-2012
DP-312871	US	11/167790	27-Jun-2005	7611327	03-Nov-2009
DP-312913	US	11/135176	23-May-2005	7501938	10-Mar-2009

DP-312914	US	11/123421	06-May-2005	7425889	16-Sep-2008
DP-312956	US	11/147905	08-Jun-2005	7327225	05-Feb-2008
DP-312987	US	11/362672	27-Feb-2006	7180257	20-Feb-2007
DP-312988	US	11/362665	27-Feb-2006	7589487	15-Sep-2009
DP-312989	US	11/362643	27-Feb-2006	7474068	06-Jan-2009
DP-312989	US	12/218712	17-Jul-2008	7538500	26-May-2009
DP-313008	US	10/978660	01-Nov-2004	7094099	22-Aug-2006
DP-313030	US	11/149820	09-Jun-2005	7253722	07-Aug-2007
DP-313032	US	11/189260	26-Jul-2005	7415337	19-Aug-2008
DP-313039	US	11/146926	06-Jun-2005	7422283	09-Sep-2008
DP-313059	US	11/364320	28-Feb-2006	7623594	24-Nov-2009
DP-313066	US	11/363218	27-Feb-2006	7352145	01-Apr-2008
DP-313071	US	11/292179	01-Dec-2005	8658013	25-Feb-2014
DP-313119	US	11/417409	04-May-2006	7176776	13-Feb-2007
DP-313135	US	11/171069	30-Jun-2005	7372055	13-May-2008
DP-313273	US	11/212052	25-Aug-2005	7492962	17-Feb-2009
DP-313275	US	11/183639	18-Jul-2005	7348880	25-Mar-2008
DP-313277	US	11/292553	02-Dec-2005	7463161	09-Dec-2008
DP-313279	US	11/156124	17-Jun-2005	7474264	06-Jan-2009
DP-313289	US	11/219400	02-Sep-2005	7324043	29-Jan-2008
DP-313326	US	11/179866	12-Jul-2005	7245261	17-Jul-2007
DP-313330	US	11/313204	20-Dec-2005	7436270	14-Oct-2008
DP-313340	US	11/271716	09-Nov-2005	7861517	04-Jan-2011
DP-313414	US	11/150730	09-Jun-2005	7349783	25-Mar-2008
DP-313424	US	11/155429	17-Jun-2005	7322392	29-Jan-2008
DP-313477	US	11/191856	28-Jul-2005	7944967	17-May-2011
DP-313480	US	11/138532	26-May-2005	7828478	09-Nov-2010
DP-313484	US	11/496803	01-Aug-2006	7710249	04-May-2010
DP-313496	US	11/231703	21-Sep-2005	7858214	28-Dec-2010
DP-313503	US	11/353523	14-Feb-2006	7351973	01-Apr-2008
DP-313507	US	11/268120	07-Nov-2005	7480351	20-Jan-2009
DP-313528	US	11/219207	02-Sep-2005	7706978	27-Apr-2010
DP-313555	US	11/110043	20-Apr-2005	7931707	26-Apr-2011
DP-313595	US	11/219233	02-Sep-2005	7472007	30-Dec-2008
DP-313597	US	11/158388	22-Jun-2005	7528731	05-May-2009
DP-313600	US	11/261697	28-Oct-2005	7252553	07-Aug-2007
DP-313619	US	11/174162	30-Jun-2005	7438152	21-Oct-2008
DP-313636	US	11/222285	08-Sep-2005	7548270	16-Jun-2009
DP-313659	US	11/287954	28-Nov-2005	7580325	25-Aug-2009
DP-313663	US	11/287841	28-Nov-2005	7918381	05-Apr-2011
DP-313712	US	11/250678	14-Oct-2005	8168347	01-May-2012
DP-313772	US	11/317431	23-Dec-2005	7423540	09-Sep-2008
DP-313786	US	11/351010	09-Feb-2006	7310190	18-Dec-2007
DP-313789	US	11/218671	02-Sep-2005	7505841	17-Mar-2009
DP-313799	US	11/365305	01-Mar-2006	7204716	17-Apr-2007
DP-313827	US	11/496598	31-Jul-2006	7241156	10-Jul-2007
DP-313832	US	11/370285	08-Mar-2006	8042631	25-Oct-2011
DP-313852	US	11/253515	19-Oct-2005	7657994	09-Feb-2010
DP-313863	US	11/475636	27-Jun-2006	7659639	09-Feb-2010
DP-313899	US	11/403271	13-Apr-2006	7351098	01-Apr-2008
DP-313992	US	11/300621	14-Dec-2005	7650034	19-Jan-2010
DP-313993	US	11/452116	13-Jun-2006	7742621	22-Jun-2010
DP-314016	US	11/327274	06-Jan-2006	7201595	10-Apr-2007
DP-314016	US	11/712006	28-Feb-2007	7749012	06-Jul-2010
DP-314034	US	11/523282	19-Sep-2006	7267583	11-Sep-2007
DP-314084	US	11/282024	17-Nov-2005	7558555	07-Jul-2009

DP-314094	US	11/243011	04-Oct-2005	7468660	23-Dec-2008
DP-314122	US	11/509858	25-Aug-2006	7439458	21-Oct-2008
DP-314123	US	11/496190	31-Jul-2006	7462795	09-Dec-2008
DP-314126	US	11/311884	19-Dec-2005	7697913	13-Apr-2010
DP-314165	US	11/473625	23-Jun-2006	7468673	23-Dec-2008
DP-314197	US	11/239646	29-Sep-2005	7217891	15-May-2007
DP-314205	US	11/592824	03-Nov-2006	7876926	25-Jan-2011
DP-314219	US	11/341148	27-Jan-2006	7676892	16-Mar-2010
DP-314246	US	11/543604	05-Oct-2006	7448924	11-Nov-2008
DP-314262	US	11/527907	27-Sep-2006	7610250	27-Oct-2009
DP-314306	US	11/494786	26-Jul-2006	7689325	30-Mar-2010
DP-314316	US	11/437363	19-May-2006	7710333	04-May-2010
DP-314335	US	11/787497	17-Apr-2007	7675820	09-Mar-2010
DP-314338	US	11/407454	20-Apr-2006	7565126	21-Jul-2009
DP-314360	US	11/444841	01-Jun-2006	7578593	25-Aug-2009
DP-314367	US	11/706017	14-Feb-2007	7477181	13-Jan-2009
DP-314372	US	11/403358	13-Apr-2006	7635443	22-Dec-2009
DP-314396	US	11/450647	09-Jun-2006	7594629	29-Sep-2009
DP-314409	US	11/639836	15-Dec-2006	7371115	13-May-2008
DP-314418	US	11/523986	20-Sep-2006	7676087	09-Mar-2010
DP-314496	US	11/643522	21-Dec-2006	7351073	01-Apr-2008
DP-314537	US	11/403270	13-Apr-2006	7347738	25-Mar-2008
DP-314545	US	11/406622	19-Apr-2006	7332674	19-Feb-2008
DP-314551	US	11/406933	19-Apr-2006	7347743	25-Mar-2008
DP-314573	US	11/542980	04-Oct-2006	7646422	12-Jan-2010
DP-314578	US	11/595663	10-Nov-2006	7331831	19-Feb-2008
DP-314633	US	11/732296	03-Apr-2007	7745771	29-Jun-2010
DP-314670	US	11/523358	19-Sep-2006	7179136	20-Feb-2007
DP-314691	US	11/523414	19-Sep-2006	7396255	08-Jul-2008
DP-314717	US	11/484873	11-Jul-2006	7835834	16-Nov-2010
DP-314719	US	12/001293	11-Dec-2007	7868828	11-Jan-2011
DP-314728	US	11/493279	26-Jul-2006	7940955	10-May-2011
DP-314752	US	11/452669	14-Jun-2006	7370970	13-May-2008
DP-314792	US	11/609778	12-Dec-2006	7439507	21-Oct-2008
DP-314840	US	11/796083	26-Apr-2007	7351089	01-Apr-2008
DP-314863	US	11/982653	02-Nov-2007	7512516	31-Mar-2009
DP-314866	US	11/493264	26-Jul-2006	7278890	09-Oct-2007
DP-314893	US	11/645849	27-Dec-2006	8356682	22-Jan-2013
DP-314896	US	11/527908	27-Sep-2006	7758989	20-Jul-2010
DP-314897	US	11/406873	19-Apr-2006	7700215	20-Apr-2010
DP-314914	US	11/496682	31-Jul-2006	7201587	10-Apr-2007
DP-314951	US	11/442560	25-May-2006	7266469	04-Sep-2007
DP-314983	US	11/640164	15-Dec-2006	7423224	09-Sep-2008
DP-315071	US	11/544440	04-Oct-2006	7917111	29-Mar-2011
DP-315096	US	12/215012	24-Jun-2008	7687720	30-Mar-2010
DP-315096	US	11/473648	23-Jun-2006	7408116	05-Aug-2008
DP-315112	US	11/711258	27-Feb-2007	7438585	21-Oct-2008
DP-315125	US	11/483788	10-Jul-2006	7534962	19-May-2009
DP-315130	US	11/406958	19-Apr-2006	7771884	10-Aug-2010
DP-315140	US	11/784125	05-Apr-2007	8034499	11-Oct-2011
DP-315142	US	11/895034	22-Aug-2007	7759901	20-Jul-2010
DP-315171	US	11/707292	16-Feb-2007	7413479	19-Aug-2008
DP-315174	US	11/961220	20-Dec-2007	7735920	15-Jun-2010
DP-315191	US	11/519043	11-Sep-2006	7675296	09-Mar-2010
DP-315268	US	11/459415	24-Jul-2006	7804796	28-Sep-2010
DP-315293	US	11/633958	05-Dec-2006	7615713	10-Nov-2009

DP-315309	US	11/478347	29-Jun-2006	7805231	28-Sep-2010
DP-315350	US	11/519537	12-Sep-2006	7410114	12-Aug-2008
DP-315362	US	11/827442	11-Jul-2007	7645943	12-Jan-2010
DP-315373	US	11/717461	13-Mar-2007	7438497	21-Oct-2008
DP-315389	US	11/708446	20-Feb-2007	7726985	01-Jun-2010
DP-315392	US	11/804885	21-May-2007	7972422	05-Jul-2011
DP-315425	US	11/654823	18-Jan-2007	7384309	10-Jun-2008
DP-315428	US	11/654861	18-Jan-2007	7503793	17-Mar-2009
DP-315449	US	11/706016	14-Feb-2007	7434481	14-Oct-2008
DP-315485	US	12/011885	30-Jan-2008	8545153	01-Oct-2013
DP-315488	US	11/708500	20-Feb-2007	7800344	21-Sep-2010
DP-315516	US	11/600396	16-Nov-2006	7408123	05-Aug-2008
DP-315567	US	11/890066	03-Aug-2007	7940962	10-May-2011
DP-315597	US	11/712719	01-Mar-2007	7668525	23-Feb-2010
DP-315608	US	11/779114	17-Jul-2007	7618057	17-Nov-2009
DP-315624	US	14/048082	08-Oct-2013	8988884	24-Mar-2015
DP-315624	US	11/893357	15-Aug-2007	7733659	08-Jun-2010
DP-315624	US	12/713423	26-Feb-2010	8087165	03-Jan-2012
DP-315624	US	12/759731	14-Apr-2010	8284559	09-Oct-2012
DP-315624	US	12/764195	21-Apr-2010	8035976	11-Oct-2011
DP-315624	US	13/208635	12-Aug-2011	8493739	23-Jul-2013
DP-315624	US	13/208655	12-Aug-2011	8498126	30-Jul-2013
DP-315624	US	13/208670	12-Aug-2011	8570757	29-Oct-2013
DP-315624	US	13/208687	12-Aug-2011	8625292	07-Jan-2014
DP-315624	US	13/208714	12-Aug-2011	8731862	20-May-2014
DP-315624	US	13/208727	12-Aug-2011	8477509	02-Jul-2013
DP-315624	US	13/208746	12-Aug-2011	8593821	26-Nov-2013
DP-315624	US	13/208769	12-Aug-2011	8599568	03-Dec-2013
DP-315624	US	13/208795	12-Aug-2011	8625293	07-Jan-2014
DP-315624	US	13/903335	28-May-2013	8982561	17-Mar-2015
DP-315624	US	13/905246	30-May-2013	8947860	03-Feb-2015
DP-315624	US	13/479888	24-May-2012	8724335	13-May-2014
DP-315624	US	13/479914	24-May-2012	8830687	09-Sep-2014
DP-315624	US	13/479983	24-May-2012	8749988	10-Jun-2014
DP-315624	US	14/620782	12-Feb-2015	9119288	25-Aug-2015
DP-315624	US	13/865458	18-Apr-2013	9013881	21-Apr-2015
DP-315624	US	14/024826	12-Sep-2013	9237683	12-Jan-2016
DP-315624	US	14/030739	18-Sep-2013	9173332	27-Oct-2015
DP-315629	US	11/788521	20-Apr-2007	7422480	09-Sep-2008
DP-315642	US	11/712720	01-Mar-2007	7598455	06-Oct-2009
DP-315646	US	11/827093	10-Jul-2007	7710236	04-May-2010
DP-315647	US	11/888611	01-Aug-2007	7864544	04-Jan-2011
DP-315650	US	11/724483	15-Mar-2007	7635212	27-Dec-2009
DP-315660	US	11/893591	16-Aug-2007	7588466	15-Sep-2009
DP-315811	US	11/706535	15-Feb-2007	7331801	19-Feb-2008
DP-315815	US	11/801500	10-May-2007	7701321	20-Apr-2010
DP-315818	US	11/906724	03-Oct-2007	7617066	10-Nov-2009
DP-315901	US	11/824022	29-Jun-2007	8391780	05-Mar-2013
DP-315915	US	12/866283	05-Aug-2010	8011936	06-Sep-2011
DP-315937	US	11/811900	12-Jun-2007	7753713	13-Jul-2010
DP-315952	US	11/796518	27-Apr-2007	7498896	03-Mar-2009
DP-315996	US	12/011327	25-Jan-2008	7876204	25-Jan-2011
DP-316007	US	11/821248	22-Jun-2007	7601019	13-Oct-2009
DP-316022	US	11/823687	28-Jun-2007	7485012	03-Feb-2009
DP-316075	US	11/901893	19-Sep-2007	7957333	07-Jun-2011
DP-316076	US	11/787590	17-Apr-2007	7805120	28-Sep-2010

DP-316159	US	12/284721	24-Sep-2008	8055445	08-Nov-2011
DP-316164	US	11/796807	30-Apr-2007	7970175	28-Jun-2011
DP-316166	US	12/082011	08-Apr-2008	8104173	31-Jan-2012
DP-316175	US	11/710820	26-Feb-2007	7365102	29-Apr-2008
DP-316201	US	11/879853	18-Jul-2007	8199198	12-Jun-2012
DP-316203	US	12/008372	10-Jan-2008	7889234	15-Feb-2011
DP-316226	US	11/801980	11-May-2007	7523679	28-Apr-2009
DP-316243	US	11/890038	03-Aug-2007	7679378	16-Mar-2010
DP-316275	US	11/895807	27-Aug-2007	8045500	25-Oct-2011
DP-316279	US	12/229240	21-Aug-2008	8013539	06-Sep-2011
DP-316298	US	11/881424	27-Jul-2007	8116711	14-Feb-2012
DP-316304	US	11/899878	07-Sep-2007	7658642	09-Feb-2010
DP-316332	US	11/890037	03-Aug-2007	7790983	07-Sep-2010
DP-316346	US	12/079850	27-Mar-2008	7632118	15-Dec-2009
DP-316372	US	11/895806	27-Aug-2007	7869533	11-Jan-2011
DP-316426	US	12/001820	13-Dec-2007	7534138	19-May-2009
DP-316472	US	11/899200	05-Sep-2007	7636064	22-Dec-2009
DP-316472	US	12/612128	04-Nov-2009	7864118	04-Jan-2011
DP-316492	US	11/998934	03-Dec-2007	7641511	05-Jan-2010
DP-316504	US	11/999883	07-Dec-2007	7692096	06-Apr-2010
DP-316505	US	11/986324	21-Nov-2007	7674972	09-Mar-2010
DP-316515	US	12/287898	14-Oct-2008	8008589	30-Aug-2011
DP-316550	US	12/148571	21-Apr-2008	7963787	21-Jun-2011
DP-316568	US	12/221456	01-Aug-2008	8046135	25-Oct-2011
DP-316574	US	12/001308	11-Dec-2007	7510407	31-Mar-2009
DP-316608	US	12/080589	04-Apr-2008	7901820	08-Mar-2011
DP-316634	US	12/220942	30-Jul-2008	8050460	01-Nov-2011
DP-316638	US	12/072794	28-Feb-2008	7639171	29-Dec-2009
DP-316677	US	12/011249	25-Jan-2008	7932835	26-Apr-2011
DP-316719	US	12/362712	30-Jan-2009	7903629	08-Mar-2011
DP-316731	US	11/983248	08-Nov-2007	7609530	27-Oct-2009
DP-316780	US	12/151653	08-May-2008	7708919	04-May-2010
DP-316810	US	12/231331	29-Aug-2008	8055020	08-Nov-2011
DP-316856	US	12/676175	03-Mar-2010	8446381	21-May-2013
DP-316905	US	12/150439	28-Apr-2008	7876106	25-Jan-2011
DP-316951	US	12/218711	17-Jul-2008	8190139	29-May-2012
DP-316953	US	12/231299	29-Aug-2008	8116524	14-Feb-2012
DP-316955	US	12/231550	29-Aug-2008	8155380	10-Apr-2012
DP-316986	US	12/082626	10-Apr-2008	8051877	08-Nov-2011
DP-316987	US	12/228447	13-Aug-2008	8047860	01-Nov-2011
DP-316998	US	12/732323	26-Mar-2010	8400261	19-Mar-2013
DP-317026	US	12/080451	03-Apr-2008	7749031	06-Jul-2010
DP-317028	US	12/082025	08-Apr-2008	7868251	11-Jan-2011
DP-317064	US	12/228446	13-Aug-2008	8027168	27-Sep-2011
DP-317066	US	12/287177	07-Oct-2008	8180527	15-May-2012
DP-317079	US	12/291481	10-Nov-2008	8022834	20-Sep-2011
DP-317090	US	12/080517	03-Apr-2008	8045337	25-Oct-2011
DP-317093	US	12/082334	10-Apr-2008	8053128	08-Nov-2011
DP-317186	US	12/229297	21-Aug-2008	8115676	14-Feb-2012
DP-317220	US	12/389659	20-Feb-2009	7914278	29-Mar-2011
DP-317232	US	12/151393	06-May-2008	7651346	26-Jan-2010
DP-317258	US	12/284741	25-Sep-2008	7752925	13-Jul-2010
DP-317275	US	12/284499	23-Sep-2008	9276267	01-Mar-2016
DP-317331	US	12/752187	01-Apr-2010	8421641	16-Apr-2013
DP-317333	US	12/432975	30-Apr-2009	8237455	07-Aug-2012
DP-317341	US	12/218083	11-Jul-2008	7896435	01-Mar-2011

DP-317367	US	12/221184	31-Jul-2008	7757997	20-Jul-2010
DP-317368	US	12/228352	12-Aug-2008	7658645	09-Feb-2010
DP-317376	US	12/152302	14-May-2008	7668690	23-Feb-2010
DP-317385	US	12/468336	19-May-2009	8198992	12-Jun-2012
DP-317435	US	12/423937	15-Apr-2009	8092061	10-Jan-2012
DP-317438	US	12/150414	28-Apr-2008	8107915	31-Jan-2012
DP-317470	US	12/228329	12-Aug-2008	7780485	24-Aug-2010
DP-317471	US	12/287873	14-Oct-2008	7635286	22-Dec-2009
DP-317484	US	12/291813	13-Nov-2008	8052492	08-Nov-2011
DP-317489	US	12/288145	16-Oct-2008	7806007	05-Oct-2010
DP-317490	US	12/334627	15-Dec-2008	8094001	10-Jan-2012
DP-317497	US	12/358773	23-Jan-2009	7727022	01-Jun-2010
DP-317499	US	12/370319	12-Feb-2009	8164911	24-Apr-2012
DP-317499	US	13/344807	06-Jan-2012	8681507	25-Mar-2014
DP-317499	US	14/100794	09-Dec-2013	9042119	26-May-2015
DP-317499	US	14/627060	20-Feb-2015	9854683	26-Dec-2017
DP-317504	US	12/286789	02-Oct-2008	7722416	25-May-2010
DP-317511	US	12/157662	12-Jun-2008	8158909	17-Apr-2012
DP-317524	US	12/468880	20-May-2009	8249798	21-Aug-2012
DP-317561	US	12/229938	28-Aug-2008	7641499	05-Jan-2010
DP-317580	US	12/082779	14-Apr-2008	7896952	01-Mar-2011
DP-317612	US	12/231724	05-Sep-2008	7727020	01-Jun-2010
DP-317663	US	12/433923	01-May-2009	8091960	10-Jan-2012
DP-317666	US	12/286776	02-Oct-2008	7960652	14-Jun-2011
DP-317675	US	12/220944	30-Jul-2008	7794274	14-Sep-2010
DP-317682	US	12/433011	30-Apr-2009	7880480	01-Feb-2011
DP-317683	US	12/433993	01-May-2009	8154394	10-Apr-2012
DP-317687	US	12/484547	15-Jun-2009	8011253	06-Sep-2011
DP-317687	US	13/191527	27-Jul-2011	8499644	06-Aug-2013
DP-317708	US	12/220425	24-Jul-2008	8184856	22-May-2012
DP-317764	US	12/287774	14-Oct-2008	8092245	10-Jan-2012
DP-317776	US	12/287103	06-Oct-2008	8049174	01-Nov-2011
DP-317777	US	12/276439	24-Nov-2008	8213928	03-Jul-2012
DP-317792	US	12/229939	28-Aug-2008	7810444	12-Oct-2010
DP-317793	US	13/455389	25-Apr-2012	8760886	24-Jun-2014
DP-317793	US	12/713650	26-Feb-2010	8264856	11-Sep-2012
DP-317793	US	14/460559	15-Aug-2014	9237685	12-Jan-2016
DP-317823	US	12/288881	24-Oct-2008	8004212	23-Aug-2011
DP-317832	US	12/290969	05-Nov-2008	8004400	23-Aug-2011
DP-317999	US	13/568201	07-Aug-2012	8456177	04-Jun-2013
DP-318052	US	12/433920	01-May-2009	7855030	21-Dec-2010
DP-318069	US	12/366146	05-Feb-2009	7891260	22-Feb-2011
DP-318136	US	13/071961	25-Mar-2011	8477513	02-Jul-2013
DP-318175	US	13/874506	01-May-2013	9042467	26-May-2015
DP-318293	US	12/788946	27-May-2010	8232017	31-Jul-2012
DP-318294	US	12/538964	11-Aug-2009	9692079	27-Jun-2017
DP-318295	US	12/788834	27-May-2010	9356307	31-May-2016
DP-318323	US	13/119307	16-Mar-2011	8604968	10-Dec-2013
DP-318323	US	14/073489	06-Nov-2013	9063230	23-Jun-2015
DP-318326	US	14/000763	21-Aug-2013	9271430	23-Feb-2016
DP-318345	US	12/698385	02-Feb-2010	8164045	24-Apr-2012
DP-318361	US	12/505088	17-Jul-2009	7726972	01-Jun-2010
DP-318380	US	12/477237	03-Jun-2009	8336351	25-Dec-2012
DP-318385	US	13/202817	23-Aug-2011	8660737	25-Feb-2014
DP-318415	US	12/560967	16-Sep-2009	8011598	06-Sep-2011
DP-318420	US	12/757119	09-Apr-2010	8224623	17-Jul-2012

DP-318476	US	12/630066	03-Dec-2009	8500287	06-Aug-2013
DP-318535	US	12/635756	11-Dec-2009	8124037	28-Feb-2012
DP-318536	US	12/564324	22-Sep-2009	7833674	16-Nov-2010
DP-318574	US	12/758218	12-Apr-2010	8457844	04-Jun-2013
DP-318574	US	13/761384	07-Feb-2013	8489283	16-Jul-2013
DP-318575	US	12/688164	15-Jan-2010	8377705	19-Feb-2013
DP-318582	US	12/883319	16-Sep-2010	8360803	29-Jan-2013
DP-318609	US	12/412470	27-Mar-2009	8022346	20-Sep-2011
DP-318642	US	12/908088	20-Oct-2010	8500194	06-Aug-2013
DP-318672	US	12/575675	08-Oct-2009	8266798	18-Sep-2012
DP-318677	US	12/636821	14-Dec-2009	8350684	08-Jan-2013
DP-318682	US	12/536675	06-Aug-2009	8363957	29-Jan-2013
DP-318684	US	12/610659	02-Nov-2009	7932772	26-Apr-2011
DP-318688	US	12/582116	20-Oct-2009	8207796	26-Jun-2012
DP-318724	US	12/838086	16-Jul-2010	8564423	22-Oct-2013
DP-318762	US	12/723741	15-Mar-2010	7980872	19-Jul-2011
DP-318769	US	12/708911	19-Feb-2010	8375575	19-Feb-2013
DP-318769	US	13/668461	05-Nov-2012	9456531	27-Sep-2016
DP-318808	US	12/619958	17-Nov-2009	7931479	26-Apr-2011
DP-318863	US	12/887872	22-Sep-2010	8836538	16-Sep-2014
DP-318890	US	12/575689	08-Oct-2009	7905755	15-Mar-2011
DP-318899	US	13/379760	21-Dec-2011	8598475	03-Dec-2013
DP-318913	US	12/642938	21-Dec-2009	8400323	19-Mar-2013
DP-318988	US	12/606245	27-Oct-2009	8438862	14-May-2013
DP-319012	US	13/640614	11-Oct-2012	8816995	26-Aug-2014
DP-319014	US	12/709672	22-Feb-2010	8259952	04-Sep-2012
DP-319015	US	13/393865	02-Mar-2012	8837140	16-Sep-2014
DP-319019	US	12/764618	21-Apr-2010	8105113	31-Jan-2012
DP-319082	US	12/768903	28-Apr-2010	8219286	10-Jul-2012
DP-319101	US	12/709722	22-Feb-2010	8259962	04-Sep-2012
DP-319155	US	12/841422	22-Jul-2010	8466438	18-Jun-2013
DP-319162	US	12/840578	21-Jul-2010	9112219	18-Aug-2015
DP-319164	US	12/981881	30-Dec-2010	8420278	16-Apr-2013
DP-319190	US	13/640684	11-Oct-2012	8833945	16-Sep-2014
DP-319199	US	12/837602	16-Jul-2010	8129951	06-Mar-2012
DP-319207	US	12/840526	21-Jul-2010	8277055	02-Oct-2012
DP-319208	US	13/714664	14-Dec-2012	8920993	30-Dec-2014
DP-319212	US	12/719584	08-Mar-2010	7955104	07-Jun-2011
DP-319213	US	12/787452	26-May-2010	8305773	06-Nov-2012
DP-319213	US	13/550856	17-Jul-2012	9125293	01-Sep-2015
DP-319219	US	12/721010	10-Mar-2010	8379769	19-Feb-2013
DP-319219	US	13/705527	05-Dec-2012	8599971	03-Dec-2013
DP-319226	US	13/017733	31-Jan-2011	8646176	11-Feb-2014
DP-319230	US	13/011956	24-Jan-2011	8713771	06-May-2014
DP-319240	US	12/750146	30-Mar-2010	8043106	25-Oct-2011
DP-319241	US	12/883838	16-Sep-2010	8181343	22-May-2012
DP-319280	US	13/992529	07-Jun-2013	9229531	05-Jan-2016
DP-319294	US	13/635451	17-Sep-2012	8757825	24-Jun-2014
DP-319308	US	13/635930	19-Sep-2012	9063560	23-Jun-2015
DP-319340	US	12/938724	03-Nov-2010	8641142	04-Feb-2014
DP-319364	US	13/175003	01-Jul-2011	8650351	11-Feb-2014
DP-319365	US	13/874688	01-May-2013	8573994	05-Nov-2013
DP-319384	US	13/097249	29-Apr-2011	8488303	16-Jul-2013
DP-319385	US	13/115342	25-May-2011	8267702	18-Sep-2012
DP-319424	US	12/938757	03-Nov-2010	8558713	15-Oct-2013
DP-319426	US	13/816496	12-Feb-2013	9111669	18-Aug-2015

DP-319431	US	13/810467	16-Jan-2013	9063327	23-Jun-2015
DP-319433	US	13/813212	30-Jan-2013	8813579	26-Aug-2014
DP-319434	US	13/808613	07-Jan-2013	9322724	26-Apr-2016
DP-319443	US	13/113286	23-May-2011	8287306	16-Oct-2012
DP-319450	US	13/009931	20-Jan-2011	8539283	17-Sep-2013
DP-319453	US	12/840576	21-Jul-2010	8362992	29-Jan-2013
DP-319456	US	12/980475	29-Dec-2010	8305678	06-Nov-2012
DP-319462	US	12/961099	06-Dec-2010	8333622	18-Dec-2012
DP-319467	US	12/881242	14-Sep-2010	8363325	29-Jan-2013
DP-319468	US	12/958767	02-Dec-2010	8279510	02-Oct-2012
DP-319475	US	12/980528	29-Dec-2010	8480798	09-Jul-2013
DP-319482	US	13/876487	28-Mar-2013	9052736	09-Jun-2015
DP-319484	US	13/315448	09-Dec-2011	8440358	14-May-2013
DP-319493	US	13/018841	01-Feb-2011	8235744	07-Aug-2012
DP-319503	US	14/123981	03-Dec-2013	8926107	06-Jan-2015
DP-319511	US	13/305096	28-Nov-2011	8832934	16-Sep-2014
DP-319518	US	13/072146	25-Mar-2011	8210864	03-Jul-2012
DP-319521	US	13/209932	15-Aug-2011	8548407	01-Oct-2013
DP-319528	US	13/072171	25-Mar-2011	8277243	02-Oct-2012
DP-319529	US	29/376111	01-Oct-2010	D669033	16-Oct-2012
DP-319551	US	13/113301	23-May-2011	8323046	04-Dec-2012
DP-319552	US	13/113313	23-May-2011	8333603	18-Dec-2012
DP-319578	US	12/913864	28-Oct-2010	8038455	18-Oct-2011
DP-319590	US	14/006379	20-Sep-2013	8833185	16-Sep-2014
DP-319641	US	13/983333	02-Aug-2013	9190224	17-Nov-2015
DP-319693	US	13/267505	06-Oct-2011	8442425	14-May-2013
DP-319700	US	13/179716	11-Jul-2011	8441394	14-May-2013
DP-319724	US	13/209993	15-Aug-2011	8387457	05-Mar-2013
DP-319740	US	14/002777	03-Sep-2013	9839152	05-Dec-2017
DP-319784	US	13/106402	12-May-2011	8408765	02-Apr-2013
DP-319829	US	14/344630	13-Mar-2014	9227513	05-Jan-2016
DP-319831	US	13/118816	31-May-2011	8559981	15-Oct-2013
DP-319837	US	13/178165	07-Jul-2011	8579240	12-Nov-2013
DP-319847	US	13/106433	12-May-2011	8398282	19-Mar-2013
DP-319852	US	14/117075	12-Nov-2013	9172177	27-Oct-2015
DP-319862	US	13/296580	15-Nov-2011	8197982	12-Jun-2012
DP-319902	US	13/428435	23-Mar-2012	8827744	09-Sep-2014
DP-319907	US	14/708526	11-May-2015	9725003	08-Aug-2017
DP-319916	US	13/288561	03-Nov-2011	8485853	16-Jul-2013
DP-319917	US	13/421932	16-Mar-2012	8585447	19-Nov-2013
DP-319920	US	13/301023	21-Nov-2011	9153834	06-Oct-2015
DP-319929	US	13/450881	19-Apr-2012	9379571	28-Jun-2016
DP-319929	US	15/159312	19-May-2016	9707853	18-Jul-2017
DP-319930	US	13/163993	20-Jun-2011	8379302	19-Feb-2013
DP-319949	US	13/399068	17-Feb-2012	8556666	15-Oct-2013
DP-319975	US	13/282555	27-Oct-2011	8746889	10-Jun-2014
DP-319979	US	13/314249	08-Dec-2011	8477401	02-Jul-2013
DP-319983	US	13/283988	28-Oct-2011	8610841	17-Dec-2013
DP-319993	US	13/336640	23-Dec-2011	8842043	23-Sep-2014
DP-320010	US	13/299410	18-Nov-2011	8680936	25-Mar-2014
DP-320014	US	13/297980	16-Nov-2011	8553334	08-Oct-2013
DP-320028	US	13/396138	14-Feb-2012	8613470	24-Dec-2013
DP-320037	US	13/477737	22-May-2012	8823641	02-Sep-2014
DP-320072	US	14/358370	15-May-2014	9280208	08-Mar-2016
DP-320102	US	14/097406	05-Dec-2013	9297897	29-Mar-2016
DP-320104	US	13/744463	18-Jan-2013	8947217	03-Feb-2015

DP-320105	US	13/450936	19-Apr-2012	8622774	07-Jan-2014
DP-320106	US	13/466378	07-Jun-2012	8758035	24-Jun-2014
DP-320115	US	13/364904	02-Feb-2012	8973989	10-Mar-2015
DP-320123	US	13/332725	21-Dec-2011	8412413	02-Apr-2013
DP-320134	US	13/332739	21-Dec-2011	8503088	06-Aug-2013
DP-320140	US	13/493124	11-Jun-2012	8784127	22-Jul-2014
DP-320152	US	13/650182	12-Oct-2012	9047518	02-Jun-2015
DP-320166	US	14/424054	26-Feb-2015	9690320	27-Jun-2017
DP-320187	US	13/535957	28-Jun-2012	8489316	16-Jul-2013
DP-320189	US	13/465066	07-May-2012	8584315	19-Nov-2013
DP-320227	US	14/420696	10-Feb-2015	9662983	30-May-2017
DP-320240	US	13/477122	22-May-2012	8659408	25-Feb-2014
DP-320244	US	13/749967	25-Jan-2013	9004954	14-Apr-2015
DP-320254	US	13/585200	14-Aug-2012	9126502	08-Sep-2015
DP-320278	US	13/761238	07-Feb-2013	9118911	25-Aug-2015
DP-320289	US	13/539553	02-Jul-2012	8884169	11-Nov-2014
DP-320335	US	13/710841	11-Dec-2012	9282655	08-Mar-2016
DP-320341	US	13/590578	21-Aug-2012	8925189	06-Jan-2015
DP-320354	US	13/926463	25-Jun-2013	9011186	21-Apr-2015
DP-320356	US	13/692301	03-Dec-2012	8882521	11-Nov-2014
DP-320357	US	13/714564	14-Dec-2012	9005490	14-Apr-2015
DP-320380	US	13/741838	15-Jan-2013	9039450	26-May-2015
DP-320390	US	13/928660	27-Jun-2013	9291184	22-Mar-2016
DP-320392	US	29/434360	12-Oct-2012	D680952	30-Apr-2013
DP-320393	US	29/437832	21-Nov-2012	D686984	30-Jul-2013
DP-320394	US	29/437833	21-Nov-2012	D686985	30-Jul-2013
DP-320402	US	13/617883	14-Sep-2012	9024804	05-May-2015
DP-320404	US	13/621960	18-Sep-2012	8712364	29-Apr-2014
DP-320443	US	13/584979	14-Aug-2012	9293745	22-Mar-2016
DP-320450	US	13/713554	13-Dec-2012	9017897	28-Apr-2015
DP-320505	US	13/571511	10-Aug-2012	9061603	23-Jun-2015
DP-320588	US	13/677369	15-Nov-2012	9236758	12-Jan-2016
DP-320589	US	13/788021	07-Mar-2013	8823551	02-Sep-2014
DP-320590	US	13/744618	18-Jan-2013	9304042	05-Apr-2016
DP-320651	US	13/895413	16-May-2013	9369001	14-Jun-2016
DP-320655	US	14/425948	04-Mar-2015	9715986	25-Jul-2017
DP-320672	US	14/426796	09-Mar-2015	9407038	02-Aug-2016
DP-320676	US	13/688765	29-Nov-2012	8977090	10-Mar-2015
DP-320680	US	13/795046	12-Mar-2013	8991045	31-Mar-2015
DP-320686	US	13/846983	19-Mar-2013	9042809	26-May-2015
DP-320701	US	14/045549	03-Oct-2013	9071016	30-Jun-2015
DP-320726	US	14/434853	10-Apr-2015	9391393	12-Jul-2016
DP-320765	US	13/961299	07-Aug-2013	9061591	23-Jun-2015
DP-320779	US	13/846965	19-Mar-2013	8992251	31-Mar-2015
DP-320804	US	13/855431	02-Apr-2013	9297892	29-Mar-2016
DP-320818	US	13/742660	16-Jan-2013	8926344	06-Jan-2015
DP-320821	US	13/874513	01-May-2013	8965599	24-Feb-2015
DP-320834	US	13/936266	08-Jul-2013	9622355	11-Apr-2017
DP-320835	US	13/874519	01-May-2013	8930045	06-Jan-2015
DP-320839	US	13/942023	15-Jul-2013	9616829	11-Apr-2017
DP-320851	US	14/108814	17-Dec-2013	9099809	04-Aug-2015
DP-320893	US	13/939531	11-Jul-2013	9114720	25-Aug-2015
DP-320900	US	14/470016	27-Aug-2014	9368910	14-Jun-2016
DP-320901	US	13/904300	29-May-2013	9112278	18-Aug-2015
DP-320902	US	14/036342	25-Sep-2013	9356300	31-May-2016
DP-320905	US	14/520696	22-Oct-2014	9455516	27-Sep-2016

DP-320909	US	14/261542	25-Apr-2014	9153879	06-Oct-2015
DP-320927	US	14/174157	06-Feb-2014	9118130	25-Aug-2015
DP-320937	US	14/013708	29-Aug-2013	9520601	13-Dec-2016
DP-320938	US	14/013784	29-Aug-2013	9698434	04-Jul-2017
DP-320939	US	14/013818	29-Aug-2013	9494024	15-Nov-2016
DP-320942	US	14/013838	29-Aug-2013	9647291	09-May-2017
DP-320944	US	14/783928	12-Oct-2015	9537243	03-Jan-2017
DP-320951	US	13/871210	26-Apr-2013	8992258	31-Mar-2015
DP-320953	US	14/032512	20-Sep-2013	9812717	07-Nov-2017
DP-320954	US	13/930057	28-Jun-2013	9054454	09-Jun-2015
DP-320966	US	13/905553	30-May-2013	9117573	25-Aug-2015
DP-320972	US	13/942850	16-Jul-2013	9099814	04-Aug-2015
DP-320976	US	14/249426	10-Apr-2014	9270055	23-Feb-2016
DP-320977	US	13/925227	24-Jun-2013	9190739	17-Nov-2015
DP-320979	US	14/065873	29-Oct-2013	9153878	06-Oct-2015
DP-320980	US	15/282343	30-Sep-2016	9960502	01-May-2018
DP-320983	US	14/150136	08-Jan-2014	9153889	06-Oct-2015
DP-320986	US	14/017384	04-Sep-2013	9289848	22-Mar-2016
DP-321001	US	14/105487	13-Dec-2013	9666880	30-May-2017
DP-321004	US	14/330217	14-Jul-2014	9172183	27-Oct-2015
DP-321018	US	15/029128	13-Apr-2016	9653845	16-May-2017
DP-321027	US	13/961998	08-Aug-2013	8978201	17-Mar-2015
DP-321040	US	14/421190	12-Feb-2015	9917434	13-Mar-2018
DP-321047	US	15/109866	06-Jul-2016	9928941	27-Mar-2018
DP-321051	US	13/955725	31-Jul-2013	9042717	26-May-2015
DP-321062	US	14/406868	10-Dec-2014	9270318	23-Feb-2016
DP-321084	US	14/048214	08-Oct-2013	9153899	06-Oct-2015
DP-321089	US	14/081092	15-Nov-2013	9379394	28-Jun-2016
DP-321090	US	14/081068	15-Nov-2013	9531020	27-Dec-2016
DP-321099	US	14/071978	05-Nov-2013	9366281	14-Jun-2016
DP-321112	US	14/101482	10-Dec-2013	9142907	22-Sep-2015
DP-321113	US	14/101488	10-Dec-2013	9362659	07-Jun-2016
DP-321134	US	14/036017	25-Sep-2013	9231124	05-Jan-2016
DP-321158	US	14/035101	24-Sep-2013	9231310	05-Jan-2016
DP-321160	US	14/097553	05-Dec-2013	9379530	28-Jun-2016
DP-321178	US	14/533500	05-Nov-2014	9397485	19-Jul-2016
DP-321184	US	14/321922	02-Jul-2014	9331413	03-May-2016
DP-321194	US	14/249433	10-Apr-2014	9476283	25-Oct-2016
DP-321203	US	14/098830	06-Dec-2013	9640829	02-May-2017
DP-321219	US	14/269701	05-May-2014	9321365	26-Apr-2016
DP-321256	US	14/425157	02-Mar-2015	9502911	22-Nov-2016
DP-321273	US	14/179947	13-Feb-2014	9300069	29-Mar-2016
DP-321292	US	14/159585	21-Jan-2014	9328596	03-May-2016
DP-321349	US	14/197404	05-Mar-2014	9568600	14-Feb-2017
DP-321391	US	14/109353	17-Dec-2013	9228882	05-Jan-2016
DP-321437	US	14/191563	27-Feb-2014	9356438	31-May-2016
DP-321444	US	14/269714	05-May-2014	9376028	28-Jun-2016
DP-321451	US	14/191636	27-Feb-2014	9227526	05-Jan-2016
DP-321457	US	14/250658	11-Apr-2014	9281619	08-Mar-2016
DP-321495	US	14/274857	12-May-2014	9543747	10-Jan-2017
DP-321495	US	15/225888	02-Aug-2016	9887529	06-Feb-2018
DP-321498	US	14/277894	15-May-2014	9310468	12-Apr-2016
DP-321517	US	14/270422	06-May-2014	9293812	22-Mar-2016
DP-321554	US	15/316596	06-Dec-2016	9843132	12-Dec-2017
DP-321566	US	14/638387	04-Mar-2015	9577367	21-Feb-2017
DP-321568	US	14/445569	29-Jul-2014	9541637	10-Oct-2017

DP-321587	US	14/472910	29-Aug-2014	9621874	11-Apr-2017
DP-321630	US	14/463688	20-Aug-2014	9300085	29-Mar-2016
DP-321639	US	14/852719	14-Sep-2015	9728896	08-Aug-2017
DP-321646	US	14/476893	04-Sep-2014	9362676	07-Jun-2016
DP-321651	US	14/454754	08-Aug-2014	9594155	14-Mar-2017
DP-321654	US	14/570451	15-Dec-2014	9450226	20-Sep-2016
DP-321668	US	14/491192	19-Sep-2014	9784820	10-Oct-2017
DP-321674	US	14/694310	23-Apr-2015	9407026	02-Aug-2016
DP-321681	US	14/852713	14-Sep-2015	9590348	07-Mar-2017
DP-321687	US	14/488741	17-Sep-2014	9506803	29-Nov-2016
DP-321689	US	14/499990	29-Sep-2014	9664775	30-May-2017
DP-321718	US	14/497570	26-Sep-2014	9395538	19-Jul-2016
DP-321737	US	14/486176	15-Sep-2014	9404774	02-Aug-2016
DP-321740	US	14/548380	20-Nov-2014	9379486	28-Jun-2016
DP-321761	US	14/578646	22-Dec-2014	9504172	22-Nov-2016
DP-321792	US	14/563053	08-Dec-2014	9472885	18-Oct-2016
DP-321818	US	14/514555	15-Oct-2014	9508344	29-Nov-2016
DP-321833	US	14/662902	19-Mar-2015	9559379	31-Jan-2017
DP-321873	US	14/952025	25-Nov-2015	9911056	06-Mar-2018
DP-321878	US	14/953848	30-Nov-2015	9862318	09-Jan-2018
DP-321888	US	15/064695	09-Mar-2016	9711898	18-Jul-2017
DP-321929	US	14/700682	30-Apr-2015	9680332	13-Jun-2017
DP-321951	US	14/592408	08-Jan-2015	9469176	18-Oct-2016
DP-321954	US	14/602402	22-Jan-2015	9691514	27-Jun-2017
DP-321956	US	11/282974	18-Nov-2005	7233769	19-Jun-2007
DP-321956	US	11/467112	24-Aug-2006	8290173	16-Oct-2012
DP-321956	US	11/747080	10-May-2007	8208654	26-Jun-2012
DP-321956	US	11/933004	31-Oct-2007	7937118	03-May-2011
DP-321956	US	10/189091	03-Jul-2002	7076204	11-Jul-2006
DP-321956	US	10/691899	22-Oct-2003	6987947	17-Jan-2006
DP-321956	US	11/266900	04-Nov-2005	7359671	15-Apr-2008
DP-321956	US	11/279548	12-Apr-2006	7603080	13-Oct-2009
DP-321962	US	13/069046	22-Mar-2011	9167057	20-Oct-2015
DP-321964	US	14/693335	22-Apr-2015	9592528	14-Mar-2017
DP-321991	US	15/011970	01-Feb-2016	9537249	03-Jan-2017
DP-321993	US	15/202724	06-Jul-2016	9711902	18-Jul-2017
DP-322002	US	14/616943	09-Feb-2015	9568344	14-Feb-2017
DP-322006	US	14/744128	19-Jun-2015	9726514	08-Aug-2017
DP-322037	US	15/268728	19-Sep-2016	9619420	11-Apr-2017
DP-322037	US	14/487947	16-Sep-2014	9460037	04-Oct-2016
DP-322037	US	15/257096	06-Sep-2016	9645962	09-May-2017
DP-322101	US	14/751413	26-Jun-2015	9475461	25-Oct-2016
DP-322118	US	14/664420	20-Mar-2015	9810782	07-Nov-2017
DP-322119	US	15/083623	29-Mar-2016	9698501	04-Jul-2017
DP-322138	US	14/663052	19-Mar-2015	9910151	06-Mar-2018
DP-322139	US	14/801422	16-Jul-2015	9693459	27-Jun-2017
DP-322142	US	14/735406	10-Jun-2015	9350116	24-May-2016
DP-322143	US	14/818429	05-Aug-2015	9455523	27-Sep-2016
DP-322154	US	14/687375	15-Apr-2015	9499202	22-Nov-2016
DP-322156	US	14/730586	04-Jun-2015	9618936	11-Apr-2017
DP-322157	US	14/701796	01-May-2015	9555807	31-Jan-2017
DP-322213	US	14/854929	15-Sep-2015	9470777	18-Oct-2016
DP-322214	US	14/932261	04-Nov-2015	9472899	18-Oct-2016
DP-322220	US	14/932230	04-Nov-2015	9431771	30-Aug-2016
DP-322224	US	14/862672	23-Sep-2015	9768554	19-Sep-2017
DP-322228	US	14/830786	20-Aug-2015	9705228	11-Jul-2017

DP-322230	US	14/842392	01-Sep-2015	9781361	03-Oct-2017
DP-322233	US	15/084856	30-Mar-2016	10023120	17-Jul-2018
DP-322234	US	14/851223	11-Sep-2015	9608357	28-Mar-2017
DP-322235	US	14/746019	22-Jun-2015	9493083	15-Nov-2016
DP-322248	US	14/843215	02-Sep-2015	9590367	07-Mar-2017
DP-322255	US	14/873815	02-Oct-2015	9983301	29-May-2018
DP-322264	US	15/278169	28-Sep-2016	9923327	20-Mar-2018
DP-322288	US	14/748522	24-Jun-2015	9493118	15-Nov-2016
DP-322291	US	14/748530	24-Jun-2015	9727056	08-Aug-2017
DP-322292	US	14/798937	14-Jul-2015	9588517	07-Mar-2017
DP-322294	US	14/838826	28-Aug-2015	9604639	28-Mar-2017
DP-322295	US	14/815343	31-Jul-2015	9594378	14-Mar-2017
DP-322303	US	14/748551	24-Jun-2015	9637120	02-May-2017
DP-322306	US	14/974780	18-Dec-2015	9750151	29-Aug-2017
DP-322338	US	14/972768	17-Dec-2015	9537227	03-Jan-2017
DP-322345	US	15/208841	13-Jul-2016	9787031	10-Oct-2017
DP-322349	US	14/972738	17-Dec-2015	10082168	25-Sep-2018
DP-322355	US	29/535850	11-Aug-2015	D773964	13-Dec-2016
DP-322356	US	29/535855	11-Aug-2015	D802518	14-Nov-2017
DP-322372	US	14/874760	05-Oct-2015	9914475	13-Mar-2018
DP-322379	US	15/335948	27-Oct-2016	9762003	12-Sep-2017
DP-322431	US	14/976420	21-Dec-2015	9975437	22-May-2018
DP-322433	US	15/386438	21-Dec-2016	10032545	24-Jul-2018
DP-322435	US	14/880376	12-Oct-2015	9541639	10-Jan-2017
DP-322437	US	15/189576	22-Jun-2016	9627785	18-Apr-2017
DP-322446	US	14/955139	01-Dec-2015	9783130	10-Oct-2017
DP-322448	US	15/084880	30-Mar-2016	9798054	24-Oct-2017
DP-322455	US	14/967819	14-Dec-2015	9863866	09-Jan-2018
DP-322464	US	15/368741	05-Dec-2016	10031624	24-Jul-2018
DP-322502	US	11/818777	15-Jun-2007	7438610	21-Oct-2008
DP-322530	US	15/175494	07-Jun-2016	9836977	05-Dec-2017
DP-322537	US	15/011957	01-Feb-2016	9762001	12-Sep-2017
DP-322538	US	15/375261	12-Dec-2016	10021469	10-Jul-2018
DP-322543	US	14/962092	08-Dec-2015	9952319	24-Apr-2018
DP-322561	US	15/007283	27-Jan-2016	9764741	19-Sep-2017
DP-322564	US	15/086815	31-Mar-2016	10037696	31-Jul-2018
DP-322565	US	15/146504	04-May-2016	9864374	09-Jan-2018
DP-322570	US	15/159371	19-May-2016	10017134	10-Jul-2018
DP-322577	US	15/204036	07-Jul-2016	9953476	24-Apr-2018
DP-322580	US	15/076951	22-Mar-2016	9898008	20-Feb-2018
DP-322583	US	15/083538	29-Mar-2016	9671785	06-Jun-2017
DP-322588	US	15/154192	13-May-2016	9910440	06-Mar-2018
DP-322591	US	15/160655	20-May-2016	9989966	05-Jun-2018
DP-322597	US	15/336942	28-Oct-2016	10025311	17-Jul-2018
DP-322617	US	15/196326	29-Jun-2016	9787002	10-Oct-2017
DP-322638	US	15/237746	16-Aug-2016	9840232	12-Dec-2017
DP-322642	US	14/977874	22-Dec-2015	9841813	12-Dec-2017
DP-322664	US	15/177763	09-Jun-2016	9653846	16-May-2017
DP-322685	US	15/181915	14-Jun-2016	9840253	12-Dec-2017
DP-322687	US	15/177985	09-Jun-2016	9842500	12-Dec-2017
DP-322695	US	15/159278	19-May-2016	9634435	25-Apr-2017
DP-322730	US	15/182748	15-Jun-2016	9634445	25-Apr-2017
DP-322750	US	15/154076	13-May-2016	10019014	10-Jul-2018
DP-322780	US	15/469894	27-Mar-2017	9915003	13-Mar-2018
DP-322807	US	15/177910	09-Jun-2016	9667000	30-May-2017
DP-322808	US	15/159346	19-May-2016	9758114	12-Sep-2017

DP-322814	US	15/095515	11-Apr-2016	9653859	16-May-2017
DP-322841	US	15/208855	13-Jul-2016	9755362	05-Sep-2017
DP-322865	US	15/218128	25-Jul-2016	9960550	01-May-2018
DP-322867	US	15/603950	24-May-2017	10090622	02-Oct-2018
DP-322898	US	15/227642	03-Aug-2016	9692153	27-Jun-2017
DP-322919	US	15/413589	24-Jan-2017	9899128	20-Feb-2018
DP-322926	US	15/296321	18-Oct-2016	10090614	02-Oct-2018
DP-322934	US	15/499491	27-Apr-2017	9929508	27-Mar-2018
DP-322945	US	15/233310	10-Aug-2016	9705225	11-Jul-2017
DP-322957	US	15/229997	05-Aug-2016	9870001	16-Jan-2018
DP-322989	US	15/264121	13-Sep-2016	9944318	17-Apr-2018
DP-323073	US	15/268695	19-Sep-2016	9927810	27-Mar-2018
DP-323120	US	15/369006	05-Dec-2016	9853396	26-Dec-2017
DP-323127	US	15/280522	29-Sep-2016	10090608	02-Oct-2018
DP-323130	US	15/336923	28-Oct-2016	10008786	26-Jun-2018
DP-323143	US	15/427725	08-Feb-2017	9780487	03-Oct-2017
DP-323143	US	15/687627	28-Aug-2017	9912101	06-Mar-2018
DP-323193	US	15/382990	19-Dec-2016	9893479	13-Feb-2018
DP-323207	US	15/292754	13-Oct-2016	10014583	03-Jul-2018
DP-323239	US	15/339175	31-Oct-2016	10026321	17-Jul-2018
DP-323247	US	15/375464	12-Dec-2016	9928939	27-Mar-2018
DP-323248	US	15/256784	06-Sep-2016	10089875	02-Oct-2018
DP-323273	US	15/371635	07-Dec-2016	10078334	18-Sep-2018
DP-323275	US	15/262467	12-Sep-2016	10031231	24-Jul-2018
DP-323290	US	15/414693	25-Jan-2017	9865968	09-Jan-2018
DP-323291	US	15/422552	02-Feb-2017	9793639	17-Oct-2017
DP-323292	US	15/414701	25-Jan-2017	9899758	20-Feb-2018
DP-323312	US	15/499463	27-Apr-2017	10021797	10-Jul-2018
DP-323546	US	15/490249	18-Apr-2017	9901018	20-Feb-2018
DP-323562	US	15/467659	23-Mar-2017	9978707	22-May-2018
DP-323588	US	15/432001	14-Feb-2017	9917381	13-Mar-2018
DP-323606	US	15/465296	21-Mar-2017	10037472	31-Jul-2018
DP-323722	US	15/584779	02-May-2017	10086809	02-Oct-2018
DP-323724	US	15/436894	20-Feb-2017	9906003	27-Feb-2018
DP-323752	US	15/604812	25-May-2017	9991620	05-Jun-2018
DP-323753	US	15/612059	02-Jun-2017	9917402	13-Mar-2018
DP-323783	US	15/647666	12-Jul-2017	10020599	10-Jul-2018
DP-323800	US	15/467611	23-Mar-2017	10025316	17-Jul-2018
DP-323802	US	15/626701	19-Jun-2017	9954347	24-Apr-2018
DP-323872	US	15/653609	19-Jul-2017	10028391	17-Jul-2018
DP-323877	US	15/619985	12-Jun-2017	9929509	27-Mar-2018
DP-324167	US	15/687590	28-Aug-2017	9979167	22-May-2018
DP-324204	US	15/817366	20-Nov-2017	10079446	18-Sep-2018
DP-324282	US	15/728079	09-Oct-2017	10017659	10-Jul-2018
H-198409	US	09/238538	27-Jan-1999	6168445	02-Jan-2001
H-199017	US	09/237313	26-Jan-1999	6430120	06-Aug-2002
H-200116	US	09/178236	23-Oct-1998	6099154	08-Aug-2000
H-201370	US	09/257841	25-Feb-1999	6087976	11-Jul-2000
H-201538	US	09/237312	26-Jan-1999	6018131	25-Jan-2000
H-201627	US	09/237309	26-Jan-1999	6323487	27-Nov-2001
H-201832	US	09/381314	16-Sep-1999	6236004	22-May-2001
H-201876	US	09/187701	06-Nov-1998	6161822	19-Dec-2000
H-202237	US	09/329642	10-Jun-1999	6094160	25-Jul-2000
H-203138	US	09/154290	16-Sep-1998	6006881	28-Dec-1999
H-203561	US	09/802478	09-Mar-2001	6481701	19-Nov-2002
H-203642	US	09/190729	09-Nov-1998	6157881	05-Dec-2000

H-203644	US	09/188988	09-Nov-1998	5969599	19-Oct-1999
H-203645	US	09/188487	09-Nov-1998	5964817	12-Oct-1999
H-203651	US	09/280945	29-Mar-1999	6222442	24-Apr-2001
H-203655	US	09/192523	16-Nov-1998	6219606	17-Apr-2001
H-203820	US	09/365084	30-Jul-1999	6186486	13-Feb-2001
H-203827	US	09/197878	23-Nov-1998	6430489	06-Aug-2002
H-203927	US	09/404514	23-Sep-1999	6166454	26-Dec-2000
H-203932	US	09/349214	06-Jul-1999	6898498	24-May-2005
H-204086	US	09/438867	12-Nov-1999	6139351	31-Oct-2000
H-204209	US	09/404482	23-Sep-1999	6270115	07-Aug-2001
H-204286	US	09/286326	05-Apr-1999	6356854	12-Mar-2002
H-204313	US	09/634071	08-Aug-2000	6414265	02-Jul-2002
H-204534	US	09/241171	01-Feb-1999	6230494	15-May-2001
H-204664	US	09/707605	08-Nov-2000	6392166	21-May-2002
H-204666	US	09/309848	11-May-1999	6151540	21-Nov-2000
H-204684	US	09/252415	18-Feb-1999	6420797	16-Jul-2002
H-204709	US	09/448752	24-Nov-1999	6220876	24-Apr-2001
H-204873	US	09/431345	29-Oct-1999	6402321	11-Jun-2002
H-204996	US	09/266378	11-Mar-1999	6043937	28-Mar-2000
H-205202	US	09/307856	10-May-1999	6236308	22-May-2001