US 20090268743A1

(19) United States

(12) Patent Application Publication

Chang et al.

(10) Pub. No.: US 2009/0268743 A1

(43) Pub. Date: Oct. 29, 2009

(54) DATA TRANSMISSION BRIDGE DEVICE AND CONTROL CHIP THEREOF FOR TRANSMITTING DATA

(76) Inventors: **Chi-Tung Chang**, Taipei (TW); **Shih-Min Lan**, Taipei (TW); **Jia-Lung Wang**, Taipei (TW)

Correspondence Address:
ROSENBERG, KLEIN & LEE
3458 ELLICOTT CENTER DRIVE-SUITE 101
ELLICOTT CITY, MD 21043 (US)

(21) Appl. No.: 12/153,629

(22) Filed: May 22, 2008

(30) Foreign Application Priority Data

Apr. 28, 2008 (TW) 97115553

Publication Classification

(51) Int. Cl.
H04L 12/28 (2006.01)

(52) U.S. Cl. 370/401

(57) ABSTRACT

A data transmission bridge device for transmitting data that adheres to USB specification for transmitting data and includes: a first connecting interface, a second connecting interface, and a control chip. The first connecting interface is used for connecting a first host device, and the second connecting interface is used for connecting a second host device or a slave device. The control chip connects the first connecting interface and the second connecting interface, and further includes two transmission paths. The control chip detects which device is connecting to the second connecting interface, and switch to select one of the two transmission paths for transmitting data between the first connecting interface and the second connecting interface. Therefore, the present invention can achieve the purpose that the host device can bridge and transmit data with any other device conveniently.

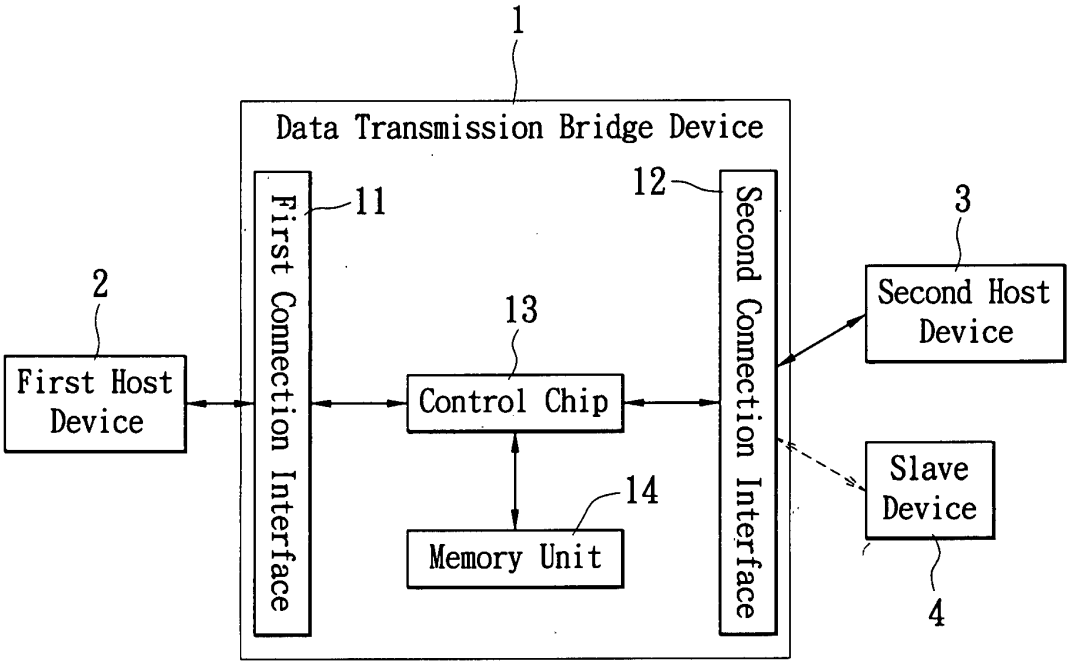

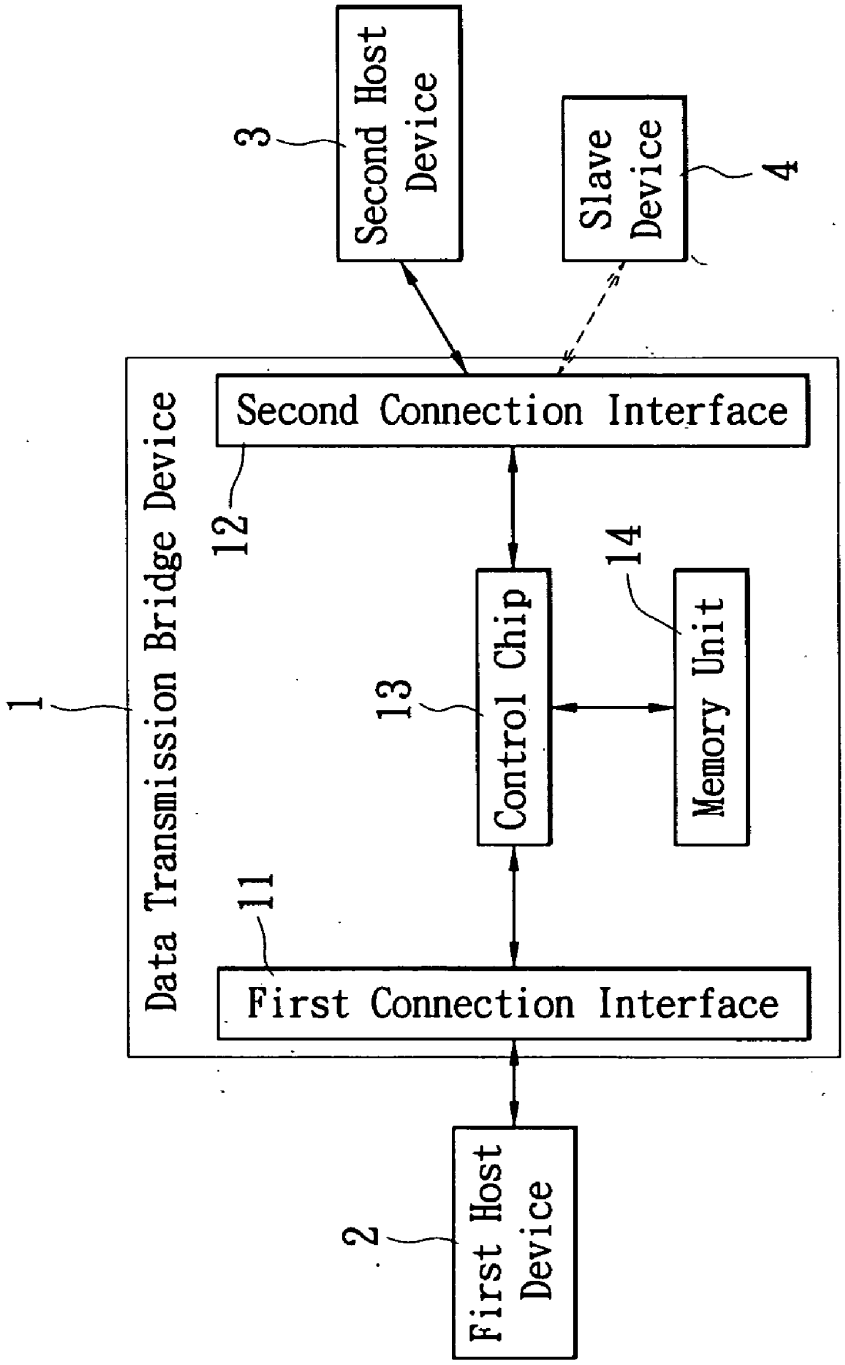
Second Host Device
3
Slave Device
4
Data Transmission Bridge Device
1
Second Connection Interface
12
Control Chip
13
Memory Unit
14
First Connection Interface
11
First Host Device
2

FIG. 1

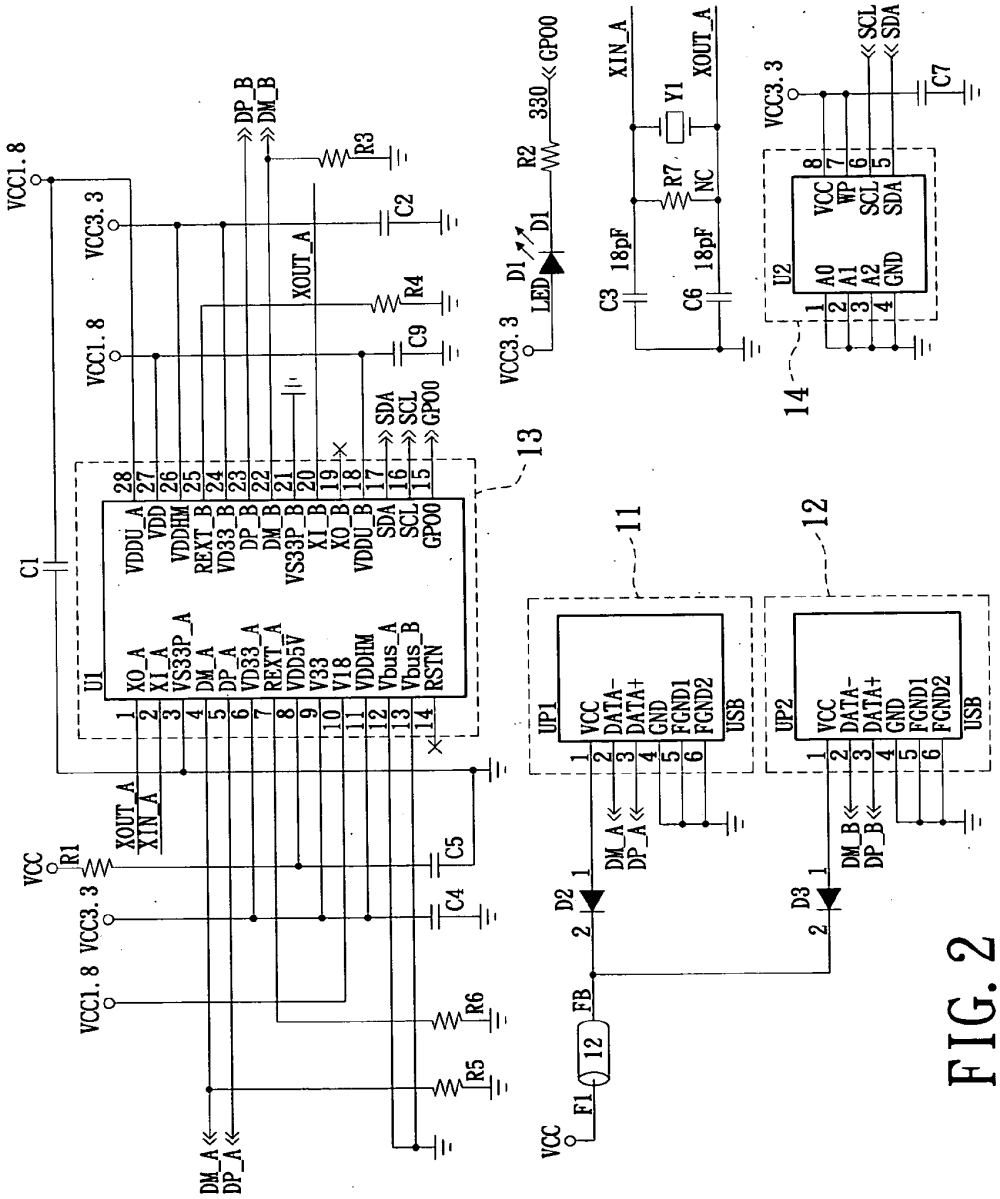
VCC1.8
VCC3.3
VCC
U1
XO_A
XI_A
VS33P_A
DM_A
DP_A
VD33_A
REXT_A
VDD5V
V33
V18
VDDHM
Vbus_A
Vbus_B
RSTN
VDDU_A
VDD
VDDHM
REXT_B
VD33_B
DP_B
DM_B
VS33P_B
XI_B
XO_B
VDDU_B
SDA
SCL
GPO0
XOUT_A
XIN_A
DP_B
DM_B
R1
R3
R4
R5
R6
R2
330
C1
C2
C4
C5
C6
C7
C9
D1
LED
Y1
R7
NC
18pF
U2
A0
A1
A2
GND
VCC
WP
SCL
SDA
UP1
UP2
DATA-
DATA+
GND
FGND1
FGND2
USB
D2
D3
FB
F1
11
12
13
14

FIG. 2

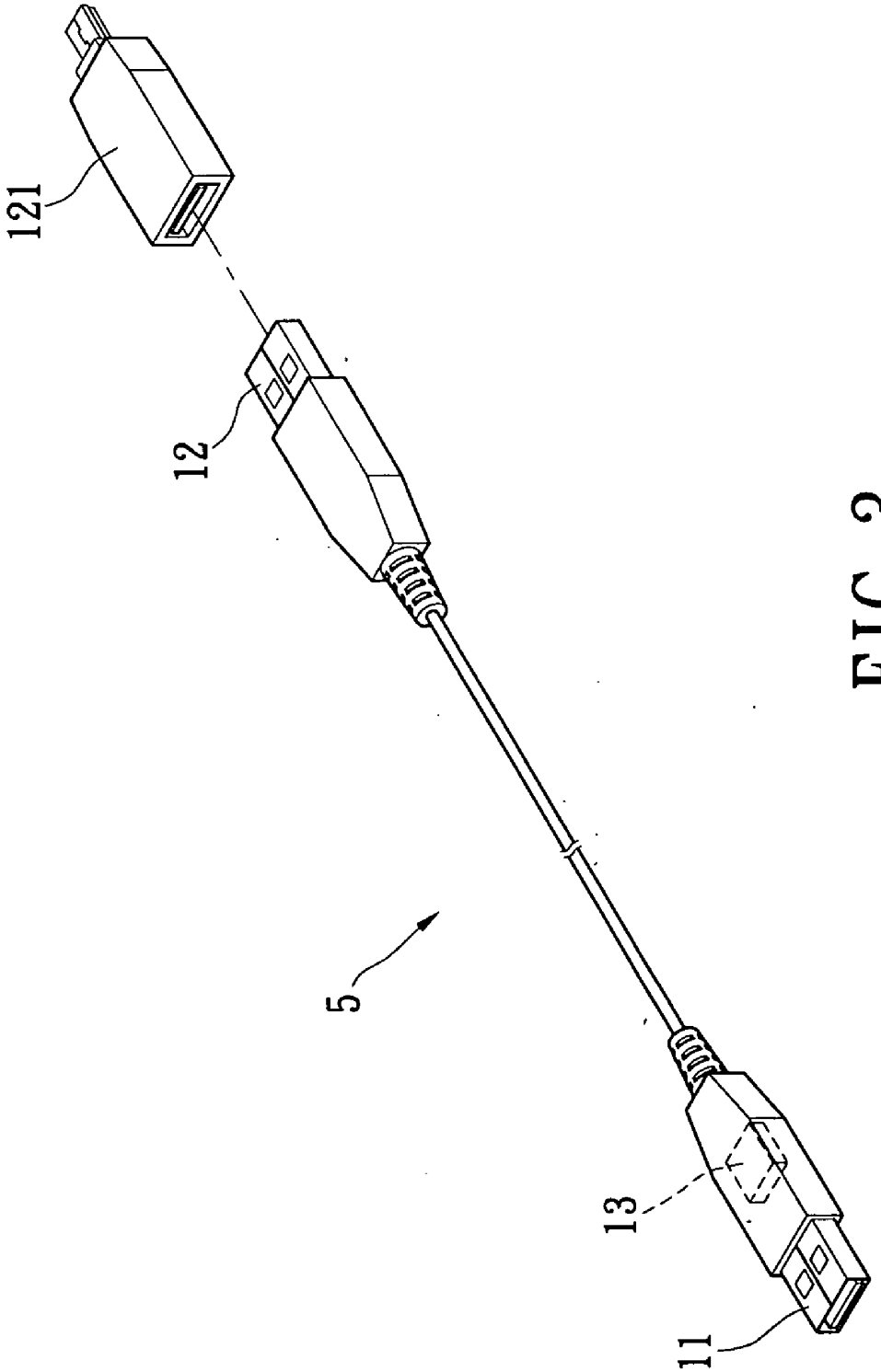

FIG. 3

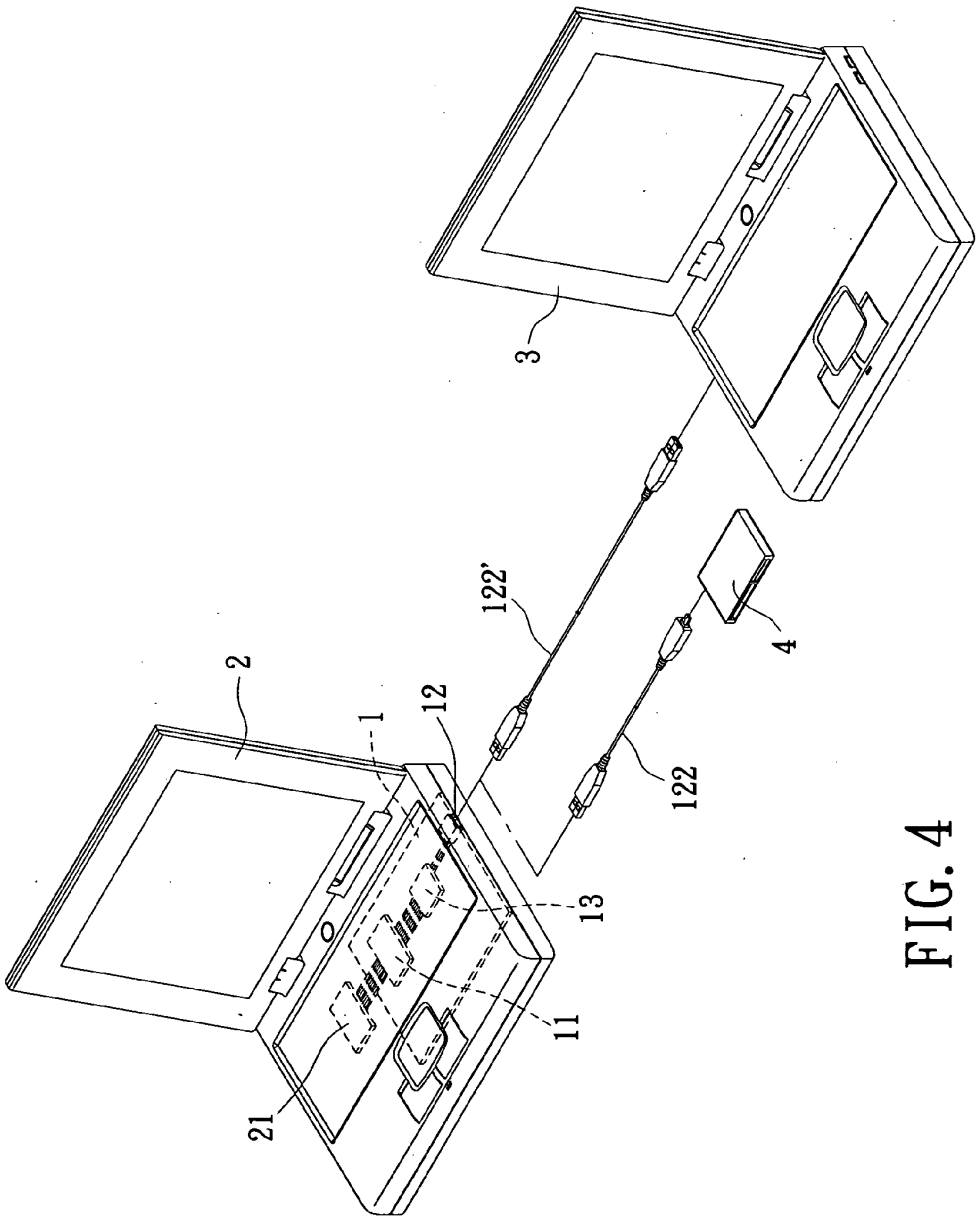

FIG. 4

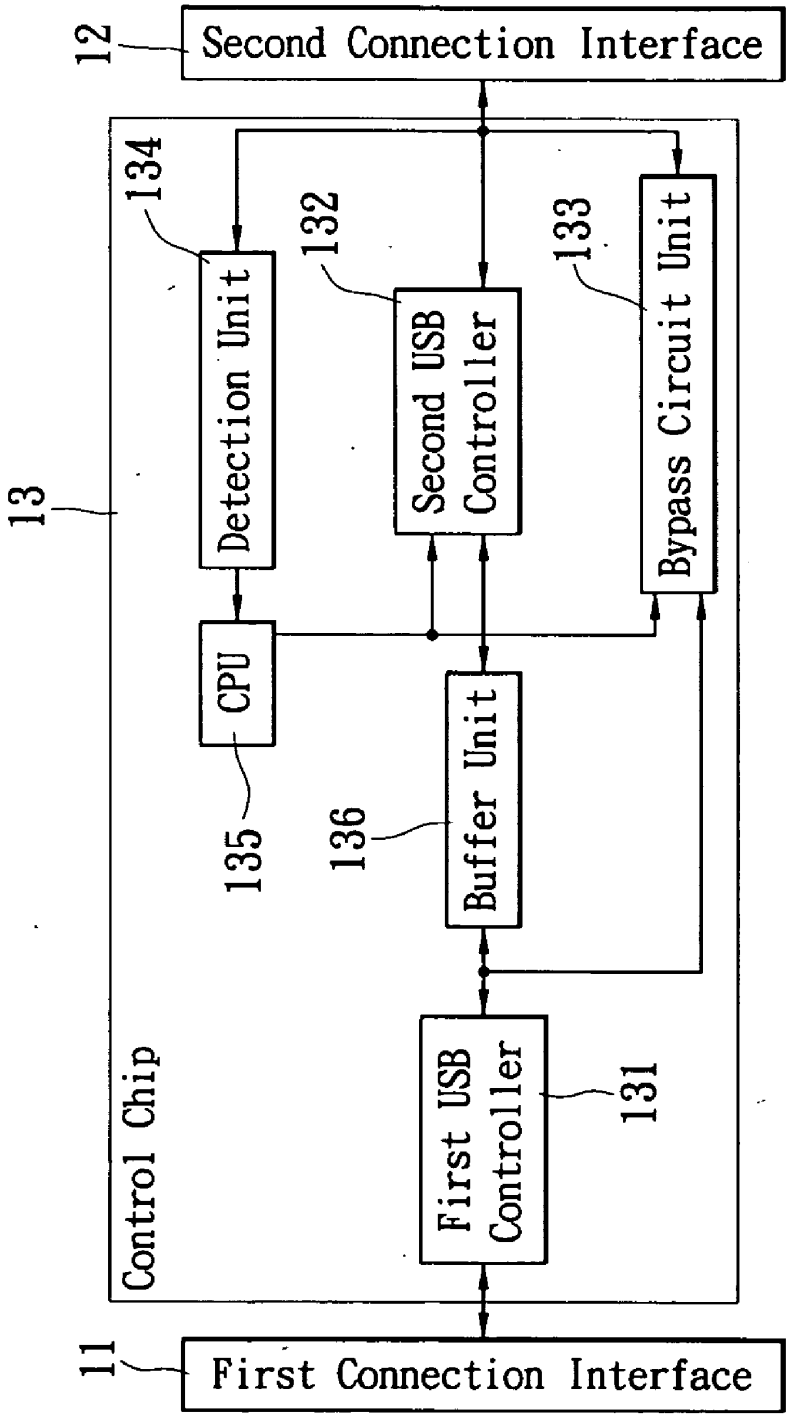
12
Second Connection Interface
13
Control Chip
134
Detection Unit
132
Second USB Controller
133
Bypass Circuit Unit
135
CPU
136
Buffer Unit
131
First USB Controller
11
First Connection Interface

FIG. 5

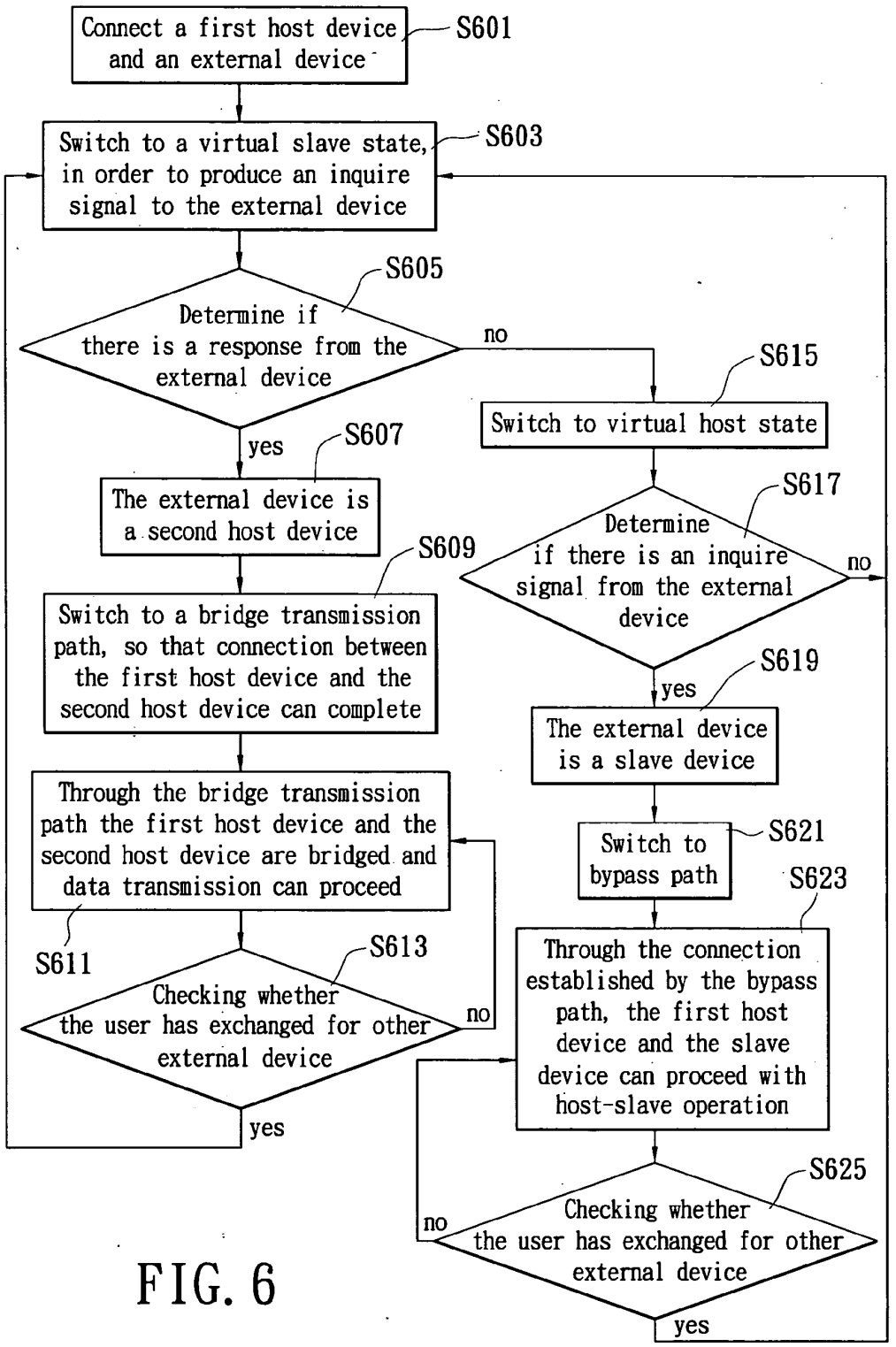
Connect a first host device and an external device
S601
Switch to a virtual slave state, in order to produce an inquire signal to the external device
S603
Determine if there is a response from the external device
S605
no
yes
S607
The external device is a second host device
S609
Switch to a bridge transmission path, so that connection between the first host device and the second host device can complete
Through the bridge transmission path the first host device and the second host device are bridged and data transmission can proceed
S611
Checking whether the user has exchanged for other external device
S613
no
yes
S615
Switch to virtual host state
Determine if there is an inquire signal from the external device
S617
no
yes
S619
The external device is a slave device
Switch to bypass path
S621
S623
Through the connection established by the bypass path, the first host device and the slave device can proceed with host-slave operation
Checking whether the user has exchanged for other external device
S625
no
yes

FIG. 6

DATA TRANSMISSION BRIDGE DEVICE AND CONTROL CHIP THEREOF FOR TRANSMITTING DATA

BACKGROUND OF THE INVENTION

[0001] 1. Field of the Invention

[0002] The present invention is related to a bridge device for transmitting data; and more particular to a data transmission bridge device and control chip thereof for transmitting data that adopts USB specification, and can utilize switching to bridge between two host devices for transmitting data.

[0003] 2. Description of Related Art

[0004] Due to rapid technological development, the availability and usability of computer has increased accordingly. As a result, currently the majority of information (including video/audio, communication, and text document) can all be processed and produced by a computer, thus, the number of data file a user might save on a computer also increases.

[0005] With the increase of data files, by direct relation, the transmission of data becomes a common user action. And in the field of long distance data transfer, the most common practice is through internet connection to achieve the objective of data transmission. On the other hand for short distance data transfer or for data transfer in close physical proximity between two computer hosts, not only can an area network be set up for transmitting data, but also the major methods listed below are available:

[0006] 1) An internet cable jumper connection method to directly connect two computer hosts. However in this method, user must separately prepare and maintain an internet jumper connection cable.

[0007] 2) A short RF (radio frequency) method for transmission, for example: Bluetooth, infrared, etc. However in this method, both computer host must support and include RF transmission module, and must each establish confirmation settings, before data transfer can occur.

[0008] 3) Through an external storage device, such as: thumb drive, portable hard drive, and similar device to indirectly facilitate data transfer between the two computer hosts. But this method has to be preformed separately on the two host computers and includes actions such as connecting external storage device to one computer host, copying file, detaching external storage device, connecting external storage device to another computer host, pasting file, and other various actions in order to complete data transfer, so that the data transfer efficiency is low.

[0009] However, regarding the above mentioned short range data transfer methods between computer hosts, although the 3rd data transfer method has a low efficiency, but this method is also more commonly used by users. The reason is that portable storage device preserve data equally well when compared to the other two methods, but also has the advantage of being portable, furthermore because most of the portable storage device adhere to USB specification, so that it is useable simply by plug and play, so that users does not have to perform any extra setting to achieve connection.

[0010] Therefore, to design a bridge device for transmitting data unites the advantages of the above described transfer methods and avoids limitations, so that users can conveniently and efficiently proceed to transfer data between two computer host in short range. This is an area of research that is worth developing.

SUMMARY OF THE INVENTION

[0011] As described above, the present invention intends to solve the technical limitation of the prior art, by designing a data transmission bridge device and control chip thereof for transmitting data between two nearby hosts; wherein the device would automatically detect the connecting device type and accordingly switch between different transmission paths, which would not only allow for support of data transfer between a host device and a slave device, but also can directly support data transfer between two host devices, and because the present invention device is designed to adhere to USB specification, so it is suitable for simple "plug and play". Thus, the objective of conveniently bridging between a host device and any other device for data transfer is achieved. Further more, because the two connected devices would be transferring data directly, it will attend high transfer efficiency.

[0012] In order to achieve the object described supra, a solution is proposed according to the present invention, by providing a data transmission bridge device for transmitting data, which adopts USB specification for data transfer; which includes: a first connection interface, a second connection interface, and a control chip. Wherein, the first connection interface is for connecting to a first host device, and the second connection interface is for connecting to a second host device or a slave device. Also, the control chip connects with the first connection interface and the second connection interface, and furthermore includes two transmission paths; the control chip is for detecting the device connected with the second connection interface, and accordingly decide on one of the two transmission paths to use for the data transmission between the first connection interface and the second connection interface.

[0013] In order to achieve the object described supra, a solution is proposed according to the present invention, by providing a control chip for a data transmission bridge device for transmitting data, the bridge device include a first connection interface and a second connection interface, and the control chip includes: a first USB controller, a second USB controller, a bypass circuit unit, a detection unit, and a CPU. Wherein, the first USB controller connects to the first connection interface, and connects with the first host device through the first connection interface for data transmission. The second USB controller connects with the first USB controller and the second connection interface, and when the second connection interface is connected to a second host device, the second USB controller would also connect with the second host device through the second connection interface, thus forming a bridge for data transfer between the second host device and the first USB controller. The bypass circuit unit connects with the second connection interface, and when the second connection interface connects with a slave device, the bypass circuit unit will directly connect the first USB controller and the second connection interface, in order to provide host-slave operation between the first host device and the slave device. Furthermore, the detection unit will automatically operate to switch between a virtual host state and a virtual slave state, wherein the states are used to determine the type of device connected with the second connection interface, and a detection signal is produced accord-

ingly, and the detection signal will be received by the CPU, and the CPU will accordingly control the second USB controller (host to host data transfer) or the bypass circuit unit (host to slave data transfer) for the appropriate operation.

[0014] In order to allow further understandings of the features and technical contents provided by the present invention, references are made to the following detailed descriptions and appended drawings; wherein the appended drawings are merely employed to present the references and illustrations of the present invention, not for imposing any restriction thereon.

BRIEF DESCRIPTION OF THE DRAWINGS

[0015] FIG. **1** shows an embodiment of a schematic diagram for a data transmission bridge device and control chip thereof for transmitting data according to the present invention;

[0016] FIG. **2** shows an embodiment of a circuit diagram for a data transmission bridge device and control chip thereof for transmitting data according to the present invention;

[0017] FIG. **3** shows a first embodiment of a structural representation for a data transmission bridge device and control chip thereof for transmitting data according to the present invention;

[0018] FIG. **4** shows a second embodiment of a structural representation for a data transmission bridge device for transmitting data according to the present invention;

[0019] FIG. **5** shows an embodiment of a schematic diagram for a control chip for a data transmission bridge device for transmitting data according to the present invention;

[0020] FIG. **6** shows a method flow chart for a data transmission bridge device and control chip thereof for transmitting data according to the present invention;

DETAILED DESCRIPTION OF THE PREFERRED EMBODIMENTS

[0021] The present Invention designed a data transmission bridge device for transmitting data between two devices (host-host or host-slave) through simple hardware structure, the main feature is the provision of two different transmission paths, so that by automatically detecting the type of device connected (host or slave) the present invention can switch to the proper transmission path, thus not only can host-slave operation between the host device and the slave device be supported, but direct bridging between two host device for data transfer is also possible. Further more the present invention adheres to USB specification by design, so that "plug and play" works properly. Thus the goal of allowing users to conveniently bridge between a host device and any other device (host or slave) for data transfer is achieved.

[0022] Please reference FIG. **1** and FIG. **2** in conjunction, which respectively shows an embodiment of a schematic circuit diagram for a data transmission bridge device and control chip thereof for transmitting data according to the present invention. As the figures show, the present embodiment provides a data transmission bridge device **1**, which includes: a first connection interface **11**, a second connection interface **12**, a control chip **13**, and a memory unit **14**. Therein, the first connection interface **11** is for connecting to a first host device **2**, and the second connection interface **12** is for connecting to a second host device **3** or a slave device **4**.

[0023] Control chip **13** connects the first connection interface **11** and the second connection interface **12**, and the control chip **13** includes two transmission paths (FIG. **5**: first path is the bridge transmission path which spans first connection interface **11**, first USB controller **131**, buffer unit **136**, second USB controller **132**, and second connection interface **12**. The second path is the bypass path which spans first connection interface **11**, first USB controller **131**, bypass circuit unit **133**, and second connection interface **12**), specifically the control chip **13** is for detecting the device currently connected with the second connection interface **12**, and according to the detection decide by switching to one of the two transmission paths to use for the data transmission between the first connection interface **11** and the second connection interface **12**. Due to the fact that the present embodiment adheres to the USB specification, so the data transmission bridge device **1** must be designed based on a device class of USB, so that the data transmission bridge device **1** of the present embodiment can successfully support the bridging of the first host device **2** to the second host device **3** for transfer, therefore the control chip **13** of the data transmission bridge device **1** is designed based on a "user defined class" specified by Microsoft™, wherein the "user defined class" defines the connection protocol between two devices.

[0024] Furthermore, the above mentioned two transmission paths included in control chip **13** can be a bridge transmission path or a bypass path. The control chip **13** will automatically and periodically switch the second connection interface **12** to a virtual host state and a virtual slave state, wherein the states are used to determine whether the type of device connected with the second connection interface **12** is the second host device **3** or the slave device **4**, so that the control chip **13** can respectively switch to the bridge transmission path or the bypass path.

[0025] For those skilled in the art of USB devices it is common knowledge that normally when a USB device is connected (i.e. a host-slave device connection), the associated slave device produces an inquire signal to the associated host device, and the connection is established once the host device has responded to the inquire signal. Therefore, in the present embodiment, when the first connection interface **11** is connected to the first host device **2**, the control chip **13** will produce an inquire signal to the first host device **2** and wait for the first host device **2** to response, then the control chip will complete the connection between the first connection interface **11** and the first host device **2**.

[0026] Similarly, when a current user is connecting the second host device **3** with the second connection interface **12**, and the control chip **13** is switched to the virtual slave device state for the second connection interface **12**, there will also be an inquire signal produced by the control chip **13** to the second host device **3**, then once the second host device **3** responses, by the response confirmation can be made that the device connected to the second connection interface **12** is also a host, so that the control chip **13** will switch the transmission path to the bridge transmission path, in order to successfully complete the bridging between the first host device **2** and the second host device **3**, so that data transfer can proceed between the two host devices.

[0027] On the other hand, when a user connects a slave device **4** to the second connection interface **12** (as suppose to the host device **3** as described above), and the control chip **13** is switched to the virtual host state for the second connection interface **12**, the control chip **13** will determine if it has received a inquire signal produced by the slave device **4**, and if such an inquire signal is received, then the device currently

connected to the second interface **12** is determined to be a slave device, so the control chip **13** will switch the transmission path to the bypass path. Then the data transmission bridge device **1** merely acts with intermediate transmission function (similar to the commonly known USB HUB function), thus the present invention can directly provide host-slave operation between the first host device **2** and the slave device **4**.

[0028] Lastly, the memory unit **14** of data transmission bridge device **1** is connected with the control chip **13**, used for saving the required program or data needed by the control chip **13** while operating. In practical design, the memory unit **14** can be combined within the control chip **13**. The present embodiment disclosed a structure of a data transmission bridge device **1** which by automatic detection switching can achieve the support of host-slave operation of a host device to a slave device, and also support the bridging of transmission between two host devices.

[0029] Please reference FIG. **3**, which shows a first embodiment of a structural representation for a data transmission bridge device and control chip thereof for transmitting data according to the present invention. Due to the simple structure of the present invention, as shown by FIG. **3**, the data transmission bridge device **1** of the present embodiment can be designed as a USB bridge transmission line **5**, wherein the first connection interface **11** and the second connection interface **12** utilizes A-Type male connector design of USB specification, in order to respectively connect with the first host device **2** and the second host device **3**. Additionally, if the second connection interface **12** needs to connect to a slave device **4** (which normally has a B-Type female connector of USB specification), then an adapter **121** can be further attached to transform the connector type of the second connection interface **12**, so that the required B-Type male connector of USB specification can be available. Thus, a user would only need one USB bridge transmission line **5** for connection between a normal host device and slave device **4** and for their associated host-slave operation, furthermore the bridging for data transmission between first host device **2** and the second host device **3** can also achieved.

[0030] Of course, the connector type of the second connection interface **12** (A-Type male connector) is not limited to what is shown in the present embodiment. In practical design, the second connection interface **12** can also directly adopt an A-Type male connector and a B-Type male connector of USB specification to achieve dual connector type design. Or, the second connection interface **12** can also adopt a B-Type male connector, then pair with an adapter to acquire an A-Type male connector of USB specification. Further, other combinations and other connector types are too numerous to list, but those connector types covered under USB specification is all within the scope of the present invention.

[0031] Please refer to FIG. **4**, which shows a second embodiment of a structural representation for a data transmission bridge device for transmitting data according to the present invention. The data transmission bridge device **1** of the second embodiment differs in practical form from the first embodiment, wherein the second embodiment build the data transmission bridge device **1** directly within a first host device **2** (such as a notebook computer), and the first connection interface **11** is internally and directly connected with the host processor unit **21** of the first host device **2**. In other words, the first connection interface **11** is permanently attached to the first host device **2**.

[0032] The second connection interface **12** of FIG. **4** is designed to have the same type of USB connector that is normally provided by common notebook computers (A-Type female connector of the USB specification). So that the second connection interface **12** can in turn connect to a slave device **4** (i.e. a card reader) through transmission extension cable **122**, or connect to a second host device **3** through transmission extension cable **122'**, wherein the transmission extension cable **122** and **122'** only has to be a simple USB transmission cable. Thus, when a user is operating the first host device **2** disclosed by the present embodiment, connection to other devices can be made through the second connection interface **12**, which not only can connect with the slave device **4** that is commonly used, but can also connect with a second host device **3**, for direct data transmission between the two host devices.

[0033] In order to further explain the technique and content of the present invention in detail, please reference the explanation regarding the embodiment below.

[0034] Please reference FIG. **5**, which shows an embodiment of a schematic diagram for a control chip of a data transmission bridge device used for transmitting data according to the present invention. As the figure shows, the present embodiment provides a control chip **13** for a data transmission bridge device **1**, which includes: a first USB controller **131**, a second USB controller **132**, a bypass circuit unit **133**, a detection unit **134**, a central processing unit (CPU) **135**, and a buffer unit **136**. Wherein, the first USB controller and the second USB controller are designed according to a "user defined class" specified by Microsoft™, wherein the "user defined class" defines the connection protocol between devices.

[0035] The first USB controller **131** connects to the first connection interface **11** of the data transmission bridge device **1**, such that when the first connection interface **11** is connected with a first host device **2**, an inquire signal is produced for the first host device **2**, and the first USB controller **131** wait for a response from the first host device **2**, then complete the connection between the first connection interface **11** and the first host device **2**, so that data transmission can proceed.

[0036] The second USB controller **132** couples to the first USB controller **132** and connects to the second connection interface **12** of the data transmission bridge device **1**, such that when the second connection interface **12** is connected with a second host device **3**, an inquire signal is produced for the second host device **3**, then the second USB controller **132** complete the connection between the second connection interface **12** and the second host device **3**, so that data transmission can proceed, thus the second USB controller **132** coupled with the first USB controller **131** forms a transmission bridge.

[0037] The bypass circuit unit **133** is connected between the first USB controller **131** and the second connection interface **12**, such that when the second connection interface **12** is connected with a slave device **4**, a direct connection between the first USB controller **131** and the second connection interface **12** can be made, so that the first USB controller **131** can response to an inquire signal produced by the slave device **4**, and thus the first host device **2** and the slave device **4** can proceed with various host-slave device operations.

[0038] The Detection unit **134** is also connected to the second connection interface **12**, and the detection unit **134** will automatically operate to switch between a virtual host state and a virtual slave state, wherein the states are used to

determine the type of device currently connected with the second connection interface **12**, and a detection signal (bridging detection signal or slave detection signal) is produced accordingly. On the other hand, the CPU **135** is for receiving the detection signal, and then according to the detection signal controls the operation of either the second USB controller **132** or the bypass circuit unit **133**.

[0039] Therein, when the detection unit **134** switches to the virtual slave state, the detection unit **134** will produce an inquire signal to the device connected to the second connection interface **12**, and after acquiring a response from the device connected to the second connection interface **12**, the detection unit **134** will produce a bridging detection signal, which causes the CPU **135** to activate the second USB controller **132** for operation according to the bridging detection signal, and thus the connection between the second USB controller **132** and the first USB controller **131** is achieved.

[0040] On the other hand, when the detection unit **134** switches to the virtual host state, and also has received an inquire signal produced by the device connected to the second connection interface **12**, the detection unit **134** will produce a slave detection signal, which causes the CPU **135** to activate the bypass circuit unit **133** for operation according to the slave detection signal. In other words, when the CPU **135** activates bypass circuit unit **133** for operation, the only controller inside the control chip **13** that is operational is the first USB controller **131**, and the control chip **13** at this time functions like a USB Hub chip, merely acting with intermediate transmission function.

[0041] Furthermore the buffer unit **136** can connected between the first USB controller **131** and the second USB controller **132**, for buffering and storing temporary data that passes between the two controllers. This way, data loss between the data transfer of first host device **2** and the second host device **3** can be avoided. As described above, the structural design of the control chip **13** is thus complete.

[0042] Please reference FIG. **6**, which shows a method flow chart for a data transmission bridge device and control chip thereof for transmitting data according to the present invention. As shown by the figure, the present embodiment provides a method for data transmission bridging, the step includes: first, connect a first host device **2** and an external device (S**601**), so that the transmission of data between the first host device **2** and the external device may proceed.

[0043] Next, switch to a virtual slave state, in order to produce an inquire signal to the external device (S**603**), and then determine if there is a response from the external device (S**605**). If at step (S**605**) the answer is yes regarding the receiving of the external device response, then it is determined that the external device is a second host device **3** (S**607**), and at this time switch to a bridge transmission path, so that connection between the first host device **2** and the second host device **3** can complete (S**609**). Finally, through the bridge transmission path the first host device **2** and the second host device **3** are bridged and data transmission can proceed (S**611**). At the same time that bridged transmission is occurring, a further step of checking whether the user has exchanged for other external device would occur constantly (S**613**), if it is determined that there are no exchange for other external device, the bridged transmission of data between the first host device **2** and the second host device **3** will continue; however if the user has exchanged for other external device, then return to step (S**603**).

[0044] However if at (S**605**) the answer is no regarding the receiving of the external device response, then it is determined that the external device is not a host type device. Therefore, an automatic switch to virtual host state will occur (S**615**), and then further determine if there is an inquire signal from the external device (S**617**). At this time, if the answer is yes regarding the receiving of the external device inquire signal, then it is determined that the external device is a slave device **4** (S**619**), and a switch to a bypass path would occur (S**621**), so that through the connection established by the bypass path, the first host device **2** and the slave device **4** can directly proceed with host-slave operation (S**623**). Of course, after step (S**623**), there would be a step of checking whether the user has exchanged for other external device (S**625**) that is similar to the previous described step (S**613**), if it is determined that there are no exchange for other external device, the host-slave operation between the first host device **2** and the save device **4** will continue; however if the user has exchanged for other external device, then return to step (S**603**).

[0045] Additionally, if at the above described step (S**617**) the answer is no regarding the receiving of the external device inquire signal, thus it is determined that the external device is not a slave device, then return to step (S**603**), so that a switch can be made to virtual slave state, and the detection/determination of the external device type would continue. Thus, through the automatic switching between virtual slave state and virtual host state, a detection of whether the type of external device is the second host device **3** or slave device **4** can be made, which in turn the proper transmission path can be switched to accordingly, so that the data transmission between the first host device **2** and the external device is achieved.

[0046] As per described above, the present invention designed a data transmission bridge device, which by automatically detecting the type of connected device to switch between the proper transmission path, can not only support data transmission between a host device and a slave device, but can also directly support data transmission between two host devices, and because the design adheres to USB specification, so there is also the convenient "plug and play" characteristic. Thus, the objective of conveniently bridging between a host device and any other device for data transfer is achieved. Further more, because the two connected device would be transferring data directly, the design will attend high transfer efficiency.

[0047] While the invention has been described in terms of what is presently considered to be the most practical and preferred embodiments, it should be understood that the invention needs not be limited to the disclosed embodiment. On the contrary, it is intended to cover various modifications and similar arrangements included within the spirit and scope of the appended claims which are to be accorded with the broadest interpretation so as to encompass all such modifications and similar structures.

What is claimed is:

1. A data transmission bridge device, which adopts USB specification for data transmission, comprising:

a first connection interface, connecting to a first host device;

a second connection interface, connecting to a second host device or a slave device; and

a control chip, connecting to the first connection interface and the second connection interface, and including two

transmission paths, wherein the control chip is used for detecting the device connected with the second connection interface and accordingly switching to one of the two transmission paths to use for data transmission between the first connection interface and the second connection interface.

2. The data transmission bridge device as claimed in claim **1**, wherein the data transmission bridge device can be designed as a USB bridge transmission line.

3. The data transmission bridge device as claimed in claim **2**, wherein the second connection interface may be attached to an adapter, in order to transform the connector type of the second connection interface.

4. The data transmission bridge device as claimed in claim **2**, wherein the second connection interface may be designed with an A-Type male connector and a B-Type male connector of the USB specification of dual connector type design.

5. The data transmission bridge device as claimed in claim **1**, wherein the second connection interface is an A-Type female connector of the USB specification, and may be attached to a transmission extension cable for connecting to a second host device or a slave device.

6. The data transmission bridge device as claimed in claim **1**, wherein the control chip is based on a "user defined class" for design, in order to comply with the connection protocol between the first host device and the second host device.

7. The data transmission bridge device as claimed in claim **1**, wherein the control chip further includes a bridge transmission path and a bypass path.

8. The data transmission bridge device as claimed in claim **7**, wherein the control chip will automatically switch between a virtual host state and a virtual slave state in regard to the second connection interface (meaning that it would appear to the device connected the second connection interface that the data transmission bridge device is a host or a slave, hence the term virtual host state and virtual slave state), and the two states are used to determine which type of device is connected with the second connection interface, so that the control chip can switch to the bridge transmission path or the bypass path accordingly.

9. The data transmission bridge device as claimed in claim **8**, wherein when the control chip switches the second connection interface to the virtual host state and receives an inquire signal produced by the device connected to the second connection interface, then the control chip determines that the second connection interface is connected to a slave device, and switches to the bypass path in order to achieve connection between the first host device and the slave device so that a host-slave operation between the first host device and the slave device can proceed.

10. The data transmission bridge device as claimed in claim **9**, wherein, when the control chip switches to the virtual slave state, and an inquire signal is produced by the control chip led to a corresponding response from the device connected to the second connection interface, then the control chip determines that the second connection interface is connected to the second host device, and proceed to switch to the bridge transmission path, in order to bridge the first host device and the second host device for data transmission.

11. The data transmission bridge device as claimed in claim **1**, further comprising a memory unit, connected to the control chip, for storing the data required by the control chip while the control chip is operating.

12. A control chip for a data transmission bridge device, the data transmission bridge device comprising a first connection interface and a second connection interface, and the control chip comprising:

a first USB controller, connected to the first connection interface, and connecting with a first host device through the first connection interface for data transmission;

a second USB controller connected with the first USB controller and the second connection interface, whereby the second USB controller connects with the second host device through the second connection interface, thus forming a bridge for data transmission between the second host device and the first USB controller, when the second connection interface is connected to a second host device;

a bypass circuit unit, connected with the second connection interface, whereby the bypass circuit unit will directly connect to the first USB controller and the second connection interface, so that a host-slave operation between the first host device and the slave device can proceed, when the second connection interface is connected to a slave device.

a detection unit, which will automatically switch between a virtual host state and a virtual slave state, wherein the two states are used to determine the type of device connected with the second connection interface, and a detection signal is generated accordingly; and

a central processing unit (CPU), which will receive the detection signal, and according to the detection signal brings either the second USB controller or the bypass circuit unit into operation.

13. The control chip for a data transmission bridge device as claimed in claim **12**, wherein the first USB controller and the second USB controller are both based on a "user defined class" for design, in order to comply with the connection protocol between the first host device and the second host device.

14. The control chip for a data transmission bridge device as claimed in claim **12**, wherein when the detection unit switches to the virtual host state and has received an inquire signal produced by the device connected to the second connection interface, the detection unit will generate a slave detection signal, so that the CPU can activate the bypass circuit unit for operation according to the slave detection signal.

15. The control chip for data transmission bridge device as claimed in claim **14**, wherein when the detection device switches to the virtual slave state and the detection unit generated an inquire signal which led to a response from the device connected to the second connection interface, then the detection unit will generate a bridging detection signal, so that the CPU can activate the second USB controller for operation according to the bridging detection signal.

16. The control chip for a data transmission bridge device as claimed in claim **12**, further comprising a buffer unit connected between the first USB controller and the second USB controller, for buffering and temporarily storing the data transmitted between the two controllers.

* * * * *