US 20060195625A1

(19) United States

(12) Patent Application Publication

Hesse

(10) Pub. No.: US 2006/0195625 A1

(43) Pub. Date: Aug. 31, 2006

(54) UNIFIED USB OTG CONTROLLER

(75) Inventor: Kay Hesse, Dresden (DE)

Correspondence Address:
MEYERTONS, HOOD, KIVLIN, KOWERT & GOETZEL (AMD)
P.O. BOX 398
AUSTIN, TX 78767-0398 (US)

(73) Assignee: Advanced Micro Devices, Inc.

(21) Appl. No.: 11/158,512

(22) Filed: Jun. 22, 2005

(30) Foreign Application Priority Data

Feb. 28, 2005 (DE)..... 10 2005 009 021.4

Publication Classification

(51) Int. Cl.
G06F 3/00 (2006.01)

(52) U.S. Cl. 710/8

(57) ABSTRACT

A USB (Universal Serial Bus) OTG (On-The-Go) controller device and more generally a serial bus control circuit chip are provided which have improved port handler implementations. In one example, different port handler units may be provided which selectively support host and device functionality at the respective ports. In another example, a first port handler for providing host functionality and a second port handler for providing device functionality are provided which are of substantially the same hardware structure. In a further example, at least one port handler is provided that has a low level protocol module for handling packet assembly and/or disassembly, a transfer buffer module for buffering incoming or outgoing data to average out system memory latencies, and a memory access module for generating memory requests in compliance with host and/or device functionality.

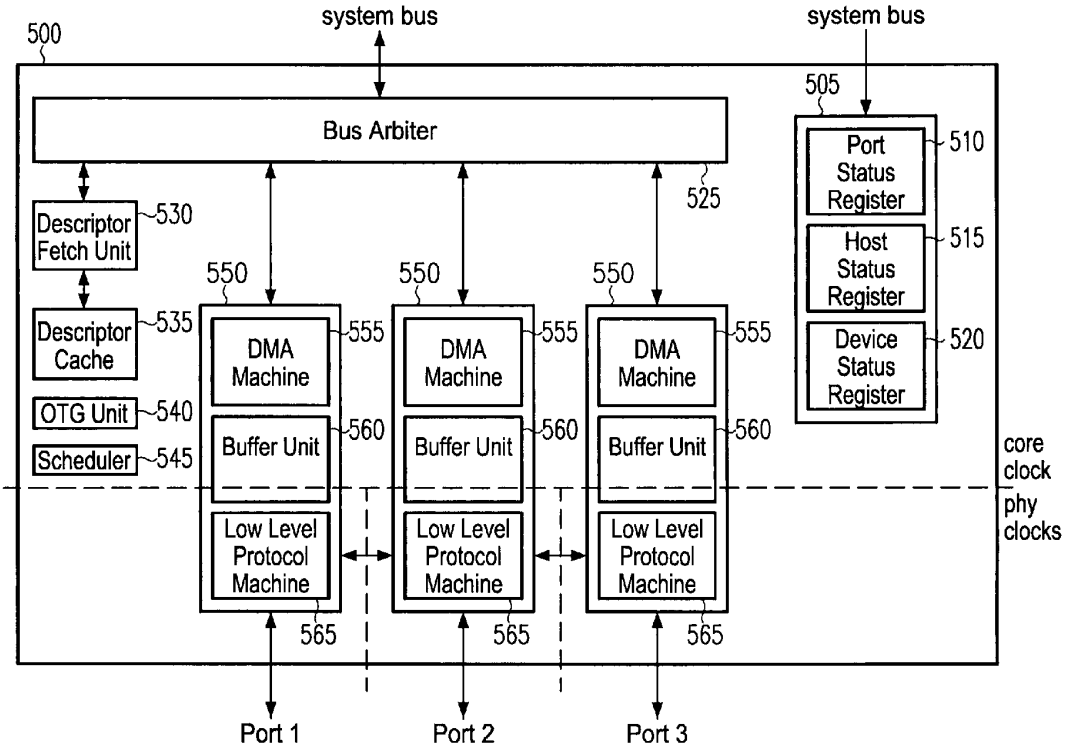

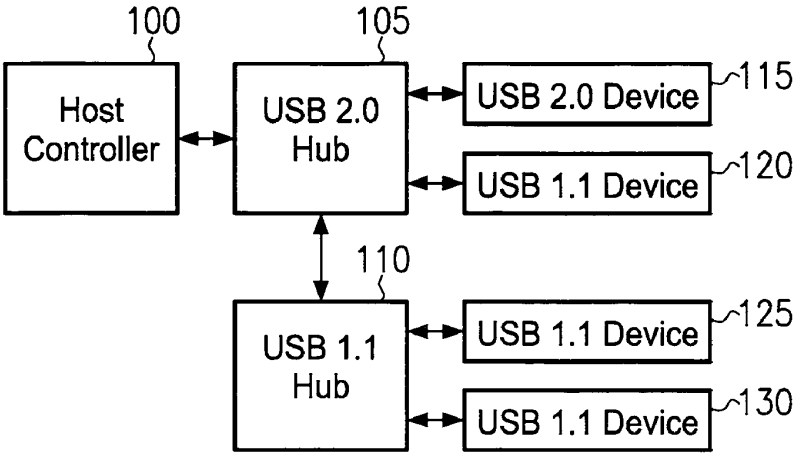

Fig. 1
(Prior Art)

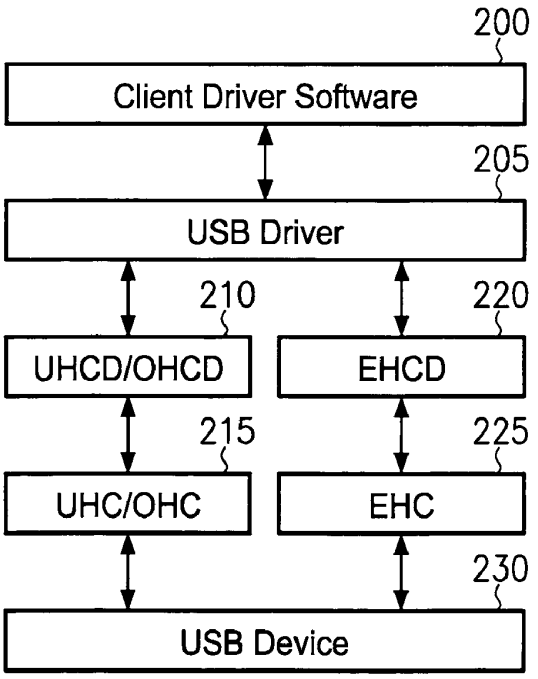

Fig. 2
(Prior Art)

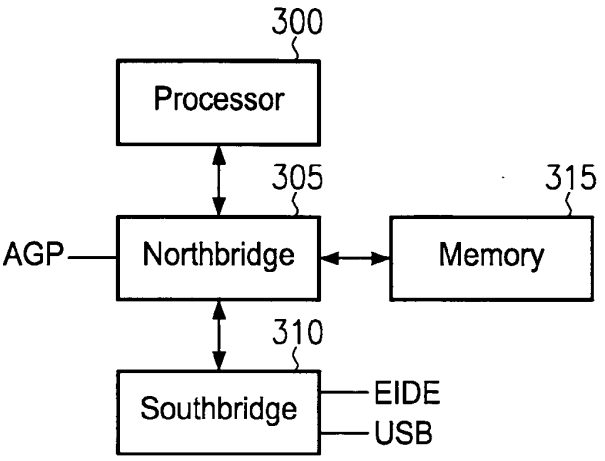

Fig. 3
(Prior Art)

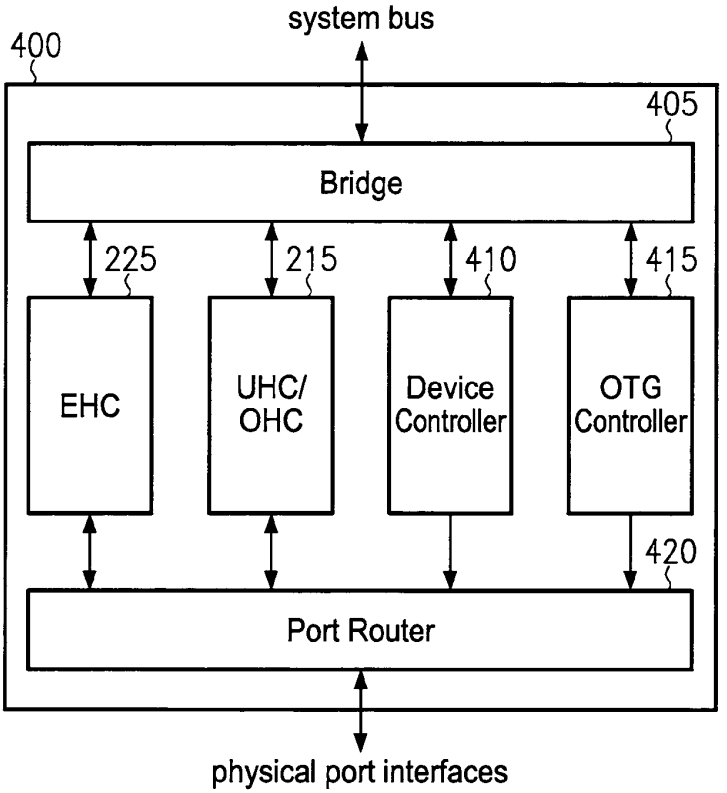

Fig. 4
(Prior Art)

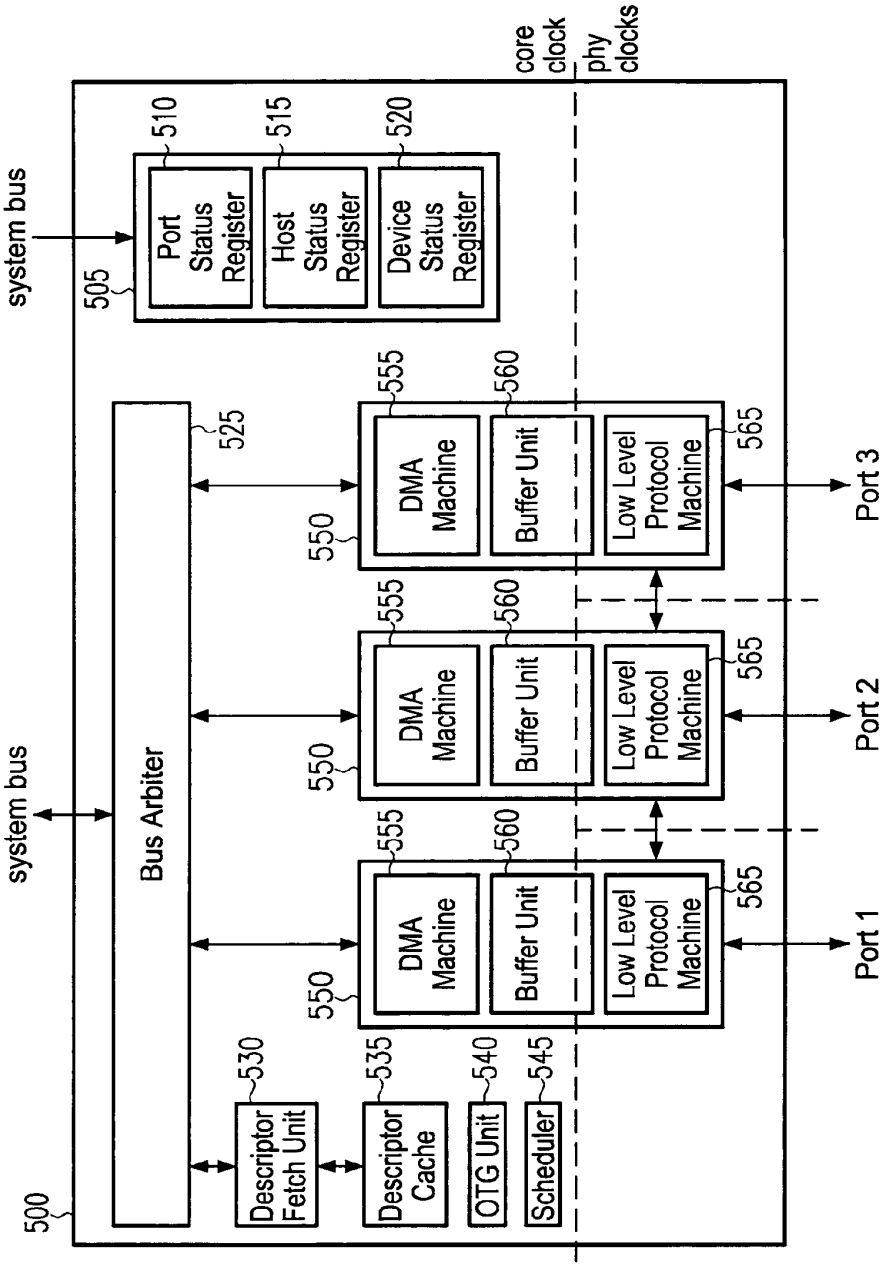
500
system bus
505
Port Status Register
510
Host Status Register
515
Device Status Register
520
core clock
phy clocks
system bus
Bus Arbiter
525
Descriptor Fetch Unit
530
Descriptor Cache
535
OTG Unit
540
Scheduler
545
550
DMA Machine
555
Buffer Unit
560
Low Level Protocol Machine
565
Port 1
Port 2
Port 3

Fig. 5

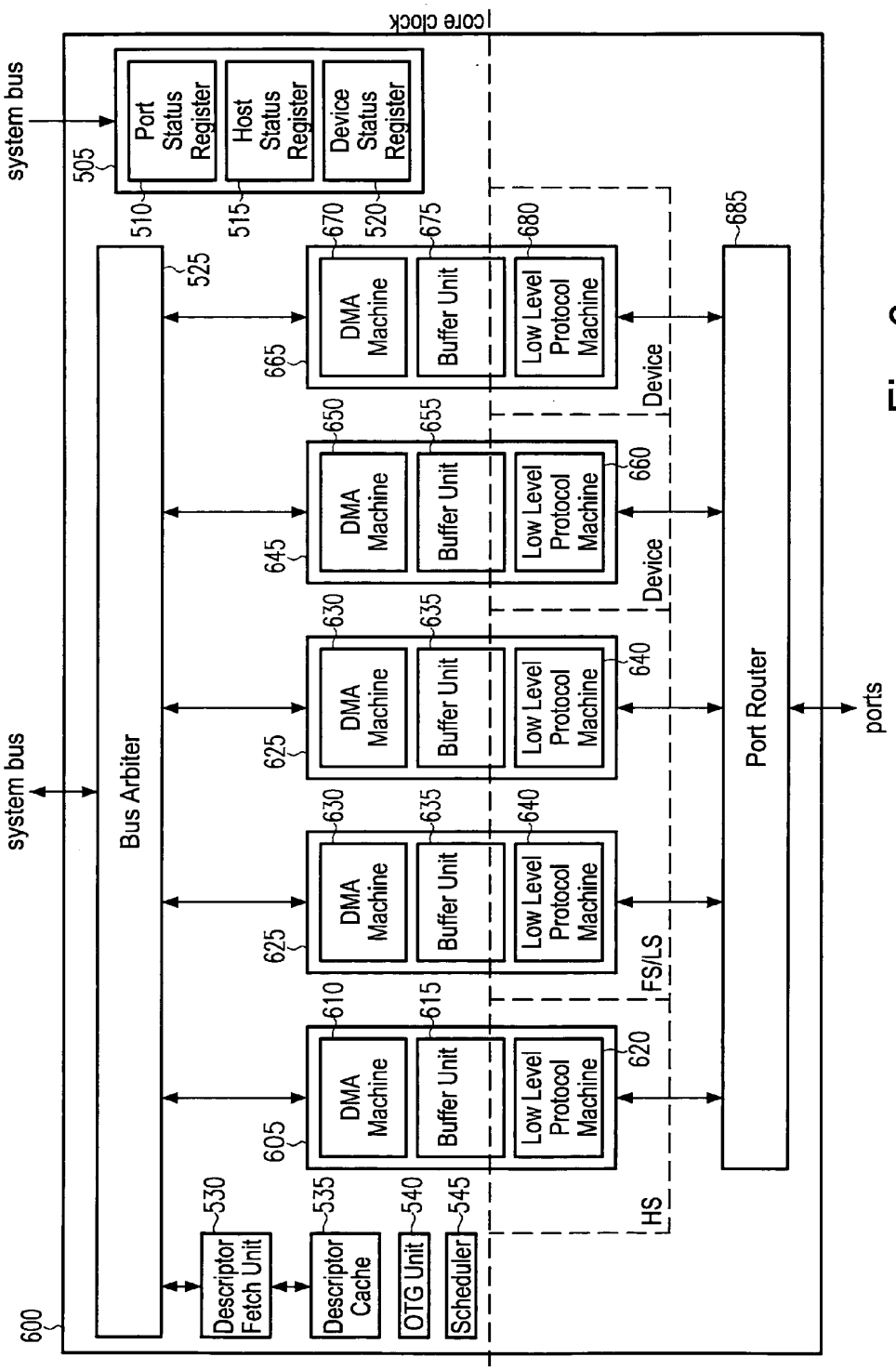
core clock
system bus
Port Status Register
Host Status Register
Device Status Register
505
510
515
520
525
Bus Arbiter
system bus
600
Descriptor Fetch Unit
530
Descriptor Cache
535
OTG Unit
540
Scheduler
545
605
610
615
620
625
630
635
640
645
650
655
660
665
670
675
680
DMA Machine
Buffer Unit
Low Level Protocol Machine
HS
FS/LS
Device
Device
685
Port Router
ports

Fig. 6

UNIFIED USB OTG CONTROLLER

BACKGROUND OF THE INVENTION

[0001] 1. Field of the Invention

[0002] The invention generally relates to USB (Universal Serial Bus) OTG (On-The-Go) controller devices and more generally to integrated circuit chips having circuitry for controlling data transfer to and/or from at least one peripheral device which selectively has device or host functionality and which is connected to a serial bus.

[0003] 2. Description of the Related Art

[0004] The Universal Serial Bus was originally developed in 1995 to define an external expansion bus which facilitates the connection of additional peripherals to a computer system. The USB technique is implemented by PC (Personal Computer) host controller hardware and software and by peripheral friendly master-slave protocols and achieves robust connections and cable assemblies. USB systems are extendable through multi-port hubs.

[0005] In USB systems, the role of the system software is to provide a uniform view of the input/output architecture for all applications software by hiding hardware implementation details. In particular, it manages the dynamic attach and detach of peripherals and communicates with the peripheral to discover its identity. During run time, the host initiates transactions to specific peripherals, and each peripheral accepts its transactions and response accordingly.

[0006] Hubs are incorporated to the system to provide additional connectivity for USB peripherals, and to provide managed power to attached devices. The peripherals are slaves that must react to request transactions sent from the host. Such request transactions include requests for detailed information about the device and its configuration.

[0007] While these functions and protocols were already implemented in the USB 1.1 specification, this technique was still improved in order to provide a higher performance interface. **FIG. 1** illustrates an example USB 2.0 system that comprises a host controller **100**, a number of USB devices **115**, **120**, **125**, **130**, and two hubs **105**, **110**. In the system of **FIG. 1**, the hubs **105**, **110** are introduced for increasing connectivity, but in other USB systems, the USB devices can be connected directly to the host controller **100**.

[0008] As mentioned above, USB 2.0 provides a higher performance interface, and the speed improvement may be up to a factor of 40. Moreover, as apparent from **FIG. 1**, USB 2.0 is backwards compatible with USB 1.1 because it allows for connecting USB 1.1 devices **120**, **125**, **130** to be driven by the same host controller **100**. There may even be used USB 1.1 hubs **110**.

[0009] As can be seen from **FIG. 1**, a USB 1.1 device **120** can be connected directly to a USB 2.0 hub **105**. Moreover, it can also be connected directly to the host controller **100**. This is made possible by the capability of USB 2.0 host controllers and hubs to negotiate higher as well as lower transmission speeds on a device-by-device basis.

[0010] Turning now to **FIG. 2**, the system software and hardware of a USB 2.0 system is illustrated. The system components can be organized hierarchically by defining several layers as shown in the figure.

[0011] In the uppermost layer, the client driver software **200** executes on the host PC and corresponds to a particular USB device **230**. The client software is typically part of the operating system or provided with the device.

[0012] The USB driver **205** is a system software bus driver that abstracts the details of the particular host controller driver **210**, **220** for a particular operating system. The host controller drivers **210**, **220** provide a software layer between a specific hardware **215**, **225**, **230** and the USB driver **205** for providing a driver-hardware interface.

[0013] While the layers discussed so far are software implemented, the uppermost hardware component layer includes the host controllers **215**, **225**. These controllers are connected to the USB device **230** that performs the end user function.

[0014] As apparent from the figure, there is one host controller **225** which is an enhanced host controller (EHC) for the high speed USB 2.0 functionality. This host controller operates in compliance with the EHCI (Enhanced Host Controller Interface) specification for USB 2.0. On the software side, host controller **225** has a specific host controller driver (EHCD) **220** associated.

[0015] Further, there are host controllers **215** for full and low speed operations. The UHCI (Universal Host Controller Interface) or OHCI (Open Host Controller Interface) are the two industry standards applied in the universal or open host controllers (UHC/OHC) **215** for providing USB 1.1 host controller interfaces. The host controllers **215** have assigned universal/open host controller drivers (UHCD/OHCD) **210** in the lowest software level.

[0016] Thus, the USB 2.0 compliant host controller system comprises driver software and host controller hardware which must be compliant to the EHCI specification. While this specification defines the register-level interface and associated memory-resident data structures, it does not define nor describe the hardware architecture required to build a compliant host controller.

[0017] Referring now to **FIG. 3**, the hardware components of a common motherboard layout are depicted. The basic elements found on a motherboard may include the CPU (Central Processing Unit) **300**, a northbridge **305**, a southbridge **310**, and system memory **315**. The northbridge **305** is usually a single chip in a core-logic chipset that connects the processor **300** to the system memory **315** and the AGP (Accelerated Graphic Port) and PCI (Peripheral Component Interface) buses. The PCI bus is commonly used in personal computers for providing a data path between the processor and peripheral devices like video cards, sound cards, network interface cards and modems. The AGP bus is a high-speed graphic expansion bus that directly connects the display adapter and system memory **315**. AGP operates independently of the PCI bus. It is to be noted that other motherboard layouts exist that have no northbridge in it, or that have a northbridge without AGP or PCI options.

[0018] The southbridge **310** is usually the chip in a system core-logic chipset that controls the IDE (Integrated Drive Electronics) or EIDE (Enhanced IDE) bus, the USB bus, that provides plug-n-play support, controls a PCI-ISA (Industry Standard Architecture) bridge, manages the keyboard/mouse controller, provides power management features, and controls other peripherals. USB functionality is often imple-

mented in a southbridge device or in other companion chips that may be part of a personal computer's chipset. As described above, this functionality provides a popular interface for exchanging data between the computer that has built in the southbridge or companion chip, and peripherals.

[0019] In order to allow low-power devices to have limited host capabilities, the "On-The-Go Supplement to the USB 2.0 Specification" has been drafted. The supplement defines two protocols: SRP (Session Request Protocol), which lets a peripheral device ask the host to turn on the USB power, and HNP (Host Negotiation Protocol), which lets a peripheral device become the USB host. Thus, the supplement to the USB 2.0 specification allows a portable device to take on the role of a limited USB host without the burden of supporting all of the USB functions of a personal computer.

[0020] Besides others, the OTG supplement specifies dual-role devices that may be operated in full speed (and optionally in high speed) as peripheral, and further in full speed (and optionally in low and high speed) as host. Further, an A-device is specified to be a host at the start of a session. Under certain conditions, the A-device will relinquish the role of host to a dual-role B-device. A B-device is a peripheral at the start of a session. If the device is dual-role, it may be granted the role of host from the A-device.

[0021] One way to create a USB 2.0 OTG dual-role device controller has been described in the German patent application number 10 2004 057 756.0 entitled "USB On-The-Go Controller", filed Nov. 30, 2004. A similar arrangement is shown in **FIG. 4**.

[0022] The USB controller device **400** of **FIG. 4** has host control units **225**, **215**, a device control unit **410**, a bridge **405**, and an OTG controller **415**. The host control units form an EHC/UHC/OHC combination and the OTG controller **415** implements OTG functionality to the USB controller device **400**. Further, there is a port router **420** for controlling access of the host control units **225**, **215** and the device control unit **410** to the shared physical port.

[0023] This bundle approach has specific advantages since it may use well-defined, partially even silicon-proven blocks and it allows the use of existing driver software with just some additional OTG controller driver modifications. Further, the arrangement of **FIG. 4** may be potentially implemented in a quite short development time.

[0024] However, this approach may lead to a non-integrated, non-coherent cluster of designs with different bus interfaces for each part, and may further have a higher degree of redundancy resulting in a considerable size penalty. For instance, the total size of the USB controller device shown in **FIG. 4** may be estimated to be in the range of 330 to 390 kgates. Further, as far as the approach of **FIG. 4** uses existing designs which have not been optimized for low power consumption, this device may require further circuit development to reduce the power consumption. Moreover, at least the conventional EHCI software interface may create a significant amount of redundant traffic on the system bus, and the bundle approach of **FIG. 4** may further lead to long combinational paths in certain situations.

SUMMARY OF THE INVENTION

[0025] A USB OTG controller device and a corresponding integrated circuit chip is provided that may have improved density, thus leading to a smaller size, less overhead, and reduced power consumption.

[0026] In one embodiment, a USB OTG controller device comprises a first port handler unit which is configured to provide USB OTG functionality at a first port, and a second port handler unit which is configured to provide USB OTG functionality at a second port. Each one of the first and second port handler units is configured to selectively support host and device functionality at the respectively first or second port.

[0027] In another embodiment, an integrated circuit chip has circuitry which is adapted to control data transfer to and/or from at least one peripheral device which selectively has device or host functionality and which is connected to a serial bus. The circuitry has a first port handler circuit configured to control data transfer to and/or from a peripheral device which is connected to a first port of the integrated circuit chip. The circuitry further has a second port handler circuit which is configured to control data transfer to and/or from a peripheral device which is connected to a second port of the integrated circuit chip. Each one of the first and second port handler circuits is configured to selectively support host and device functionality at the respective first or second port.

[0028] According to a further embodiment, there is provided a USB OTG controller device that comprises a first port handler unit adapted to provide USB host functionality to a first OTG capable device connected to a first port of the USB OTG controller device, and a second port handler unit adapted to provide USB functionality to a second OTG capable device connected to a second port of the USB OTG controller device. The first port handler unit and the second port handler unit are of substantially the same hardware structure.

[0029] In still a further embodiment, there is provided an integrated circuit chip that has circuitry that is adapted to control data transfer to and/or from at least one peripheral device which selectively has device or host functionality and which is connected to a serial bus. The circuitry has a first port handler circuit which is adapted to provide host control functionality to a first peripheral device which is connected to a first port of the integrated circuit chip. The circuitry further has a second port handler circuit which is adapted to provide device control functionality to a second peripheral device which is connected to a second port of the integrated circuit chip. The first port handler circuit and the second port handler circuit are of substantially the same hardware structure.

[0030] In yet another embodiment, a USB OTG dual-role controller device comprises at least one port handler unit which is configured to provide USB host and/or device functionality at a port to which an OTG capable device is connectable. The at least one port handler unit has a low level protocol module which is adapted to handle packet assembly and/or disassembly, a transfer buffer module which is adapted to buffer incoming or outgoing data to average out system memory latencies, and a memory access module, adapted to generate memory requests in compliance with the USB host and/or device functionality.

[0031] According to yet another embodiment there is provided an integrated circuit chip that has circuitry which is adapted to control data transfer to and/or from a peripheral device which selectively has device or host functionality and which is connected to a serial bus. The circuitry comprises at least one port handler circuit which is configured to provide host and/or device control functionality at a port to which the peripheral device is connectable. The at least one port handler circuit has a low level protocol circuit which is adapted to handle packet assembly and/or disassembly, a transfer buffer circuit which is adapted to buffer incoming or outgoing data to average out system memory latencies, and a memory access circuit which is adapted to generate memory requests in compliance with the host and/or device control functionality.

[0032] Furthermore, a computer readable storage medium is provided in a further embodiment, storing instructions that, when executed by a processor, cause the processor to drive any of the above controller devices or integrated circuit chips.

BRIEF DESCRIPTION OF THE DRAWINGS

[0033] The accompanying drawings are incorporated into and form a part of the specification for the purpose of explaining the principles of the invention. The drawings are not to be construed as limiting the invention to only the illustrated and described examples of how the invention can be made and used. Further features and advantages will become apparent from the following and more particular description of the invention, as illustrated in the accompanying drawings, wherein:

[0034] **FIG. 1** illustrates an example USB 2.0 compliant system;

[0035] **FIG. 2** illustrates the hardware and software component layers in the system of **FIG. 1**;

[0036] **FIG. 3** illustrates a common motherboard layout;

[0037] **FIG. 4** is a block diagram illustrating the components of a bundle approach USB controller device that has OTG functionality;

[0038] **FIG. 5** is a block diagram of a USB OTG controller device according to an embodiment; and

[0039] **FIG. 6** is a block diagram of a USB OTG controller device according to another embodiment.

DETAILED DESCRIPTION OF THE INVENTION

[0040] The illustrative embodiments of the present invention will be described with reference to the figure drawings wherein like elements and structures are indicated by like reference numbers.

[0041] Referring now to the drawings and particularly to **FIG. 5**, which illustrates a USB OTG controller device **500** according to an embodiment, the depicted arrangement has not more than three ports. For each port, there is an individual port handler unit **550** connected to a bus arbiter **525**. The bus arbiter **525** arbitrates bus master accesses from internal units to the system bus. The bus arbiter **525** may apply some sort of priority handling.

[0042] Further, there is provided a register file **505** having a port status register **510**, a host status register **515** and a device status register **520**. The register file **505** of the present embodiment is a slave on the system bus and is used to communicate with software, e.g., for storing control data and for providing status information.

[0043] A scheduler **545** is provided as central control instance for all host operations, i.e., all port handlers **550** in host mode, regardless of whether the respective port handler operates in high-speed mode or full/low speed mode.

[0044] The descriptor fetch unit **530** shown in **FIG. 5** may be triggered by the scheduler **545** for fetching and decoding the host traffic descriptors, both for high speed and for full/low speed. The descriptor fetch unit **530** may further assign buffer pointers to the DMA (Direct Memory Access) machines **555** of the port handler units **550**.

[0045] Further, the USB OTG controller device **500** of **FIG. 5** has an optional descriptor cache **535** for host traffic descriptors. The descriptor cache **535** may considerably reduce overhead traffic on the system bus.

[0046] Moreover, there is an OTG unit **540** provided which is the controller for the OTG functionality. In the present embodiment, the OTG unit **540** mainly consists of some registers and counters, since the present embodiment handles most of the protocol in software.

[0047] Turning now again to the port handler units **550**, the present embodiment has one port handler **550** for each port. It is noted that the present embodiment is configured with not more than three ports but other embodiments with higher or lower port numbers exist as well.

[0048] Each port handler unit **550** supports all three port modes: the high speed host mode, the full/low speed host mode, and the device mode (for any one of high, full and low speed). In the present embodiment, when more than one port is in the high-speed host mode, one of them becomes the master, i.e., it generates the actual packets, while the other one(s) simply copies this traffic. This is illustrated in **FIG. 5** by the horizontal two-way arrows linking the port handlers **550**.

[0049] In the present embodiment, each port handler unit **550** is of substantially the same hardware structure. In this context, "substantially" means that the overall hardware structure is the same but there may be some minor design differences such as in the size of specific circuits, in clock rates, or the like. The port handlers have three sub-modules **555-565**.

[0050] The low level protocol machine **565** is a module for handling packet assembly and/or disassembly. Further, the low level protocol machines **565** may provide CRC (Cyclic Redundancy Check) generation and/or checking.

[0051] The transfer buffer unit **560** may be a FIFO (First In First Out) structure that is used to average out system memory latencies. Further, the transfer buffer units **560** of the protocol handler units **550** may be used to translate from the core clock to the physical clock domain.

[0052] The DMA machines **555** are modules for generating the appropriate memory requests to fetch and/or store the USB data. The DMA machines **555** may be further responsible for enforcing system bus limits, e.g., burst lengths.

[0053] It is found that the structure of **FIG. 5** may be implemented in a manner that the total block size is in the range of 200-230 kgates, which is considerably, less than what was estimated above for the bundle approach.

[0054] When more than three physical ports are supported, the structure of **FIG. 5** may still be used. In fact, this would provide maximum flexibility for concurrent operation of any host/device assignments, i.e., each port could become a device, or each port could support its own full/low speed host segment.

[0055] In another embodiment, the number of ports that are concurrently in device or full/low speed host mode may be restricted to less than the number of physical ports. An example of such arrangement is shown in **FIG. 6**. Unlike **FIG. 5**, the number of physical ports in this approach may be greater than the number of port handler units **605**, **625**, **645**, **665**.

[0056] Further, the port handler units **605**, **625**, **645**, **665** of the device **600** shown in **FIG. 6** are restricted in functionality. For instance, the port handler unit **605** is dedicated to the high speed (HS) host mode, the port handlers **625** are dedicated to the full/low speed (FS/LS) host modes, and the port handlers **645** and **665** are dedicated to device modes. The restriction of functionality may for instance be that the respective transfer buffer units **615**, **635**, **655** and **675** are tailored to the minimum size necessary for the respective port mode, and the respective low level protocol machines **620**, **640**, **660**, **680** are configured to only handle tokens needed for the respective mode.

[0057] Further, the device **600** of **FIG. 6** has a port router **685** which may be implemented as crossbar switch for assigning each physical port to the respective port handler. It is noted that the present embodiment allows one port handler unit **605**, **625**, **645**, **665** to operate more than one physical port.

[0058] It is found that the device of **FIG. 6**, when having only one full/low speed mode port handler **625** and only one of the device mode port handlers **645**, **665**, is probably smaller in size than the device **500** of **FIG. 5**. Generally, as long as the number of physical ports is greater than the number of port handlers, the implementation of **FIG. 6** can be assumed to be of smaller size than the arrangement of **FIG. 5**.

[0059] Both **FIGS. 5 and 6** omit the physical devices, as these—be they external or internal—are not part of the controller core in the present embodiment. However, dependent on the respective port speed, the individual physical device determines the interface clocking to the controller. This is the reason why there is not only one common core clock domain in the present embodiment, but individual physical device (phy) clock domains.

[0060] In any of the above-described embodiments, a number of useful combinations of ports exist. These combinations may differ in the number of ports and how the support by the controller design is done. The following table lists sample configurations and their appearance to the end-user for up to three ports that are pluggable at the final product, e.g., a PDA (Personal Digital Assistant). The limitation of three is exemplarily chosen because it may be considered sufficient to discuss all substantially different configurations. It is assumed that one port has an A/B receptacle, as defined by the OTG specification, while the other port(s) provide additional connectivity. It should be emphasized that cases where more than one port provides host functionality may also cover the valid configuration that the user has plugged in a mixture of full/low speed (USB 1.1 compliant traffic) and high-speed (USB 2.0 compliant traffic) devices.

Design	Assembly/ Bond-out	Plugging	Application (examples)
HD1	A/B	H	The SoC controls an attached device.
		D	The SoC is controlled by another host.
HD1, HDn HDn	A/B, A A/B, B	H, H	SoC exercises normal host functionality, two different) devices plugged in, e.g. control the print-out of an image from a (non-OTG) camera to a (non-OTG) printer.
		D, H	SoC is remotely controlled and has a device attached to it: sync with PC/another PDA while printing a document
		D, D	Two hosts are accessing the SoC: sync between two PCs using shared memory provided by the SoC a built-in printer controller allowing two hosts to connect (i.e. the SoC is the printer controller)
HD1, HDn HDn	A/B, A, A A/B, A, B	H, H, H D, H, H	SoC exercises normal host functionality, three (different) devices plugged in. SoC is remotely controlled and has two devices attached to it: sync with PC/another PDA while printing a document a USB repeater?
		D, H, D	Two hosts are accessing the SoC while the SoC controls an attached device: a multi-host adaptor for shared resources (e.g. printers), the application running on SoC arbitrates the access

[0061] In the table, "Design" denotes the functionality that needs to be implemented at design-time, e.g., the RTL (Registered Transfer Level) code. "HD1" means to provide functionality for concurrent host and single-device usage. "HDn" means to provide functionality for concurrent host and multi-device usage.

[0062] In the column "Assembly/Bond-out", a functionality is indicated that is propagated from the design to the platform by means of either not bonding out all ports that the die provides, or not using all ports that are available as pins

on the package. Both ways to limit the number of user-available ports may be useful to control overall system costs.

[0063] Using different bond versions of the die may allow to tailor SoC (System on Chip) chips to different segments while not giving up the advantage of volume production. For instance, one could have a die with two USB ports and two Ethernet ports, but offer two packages: one with two USB and one Ethernet port and another package with one USB and two Ethernet ports. When using this approach, tie-bonds may be used to make the hardware resources visible to software consistent with the ports on the package.

[0064] Restricting the port number by not using all pins with respective PCB (Printed Circuit Board) wiring may be used by application platform designers to control overall system costs. It may for instance not be necessary to have PDAs with three ports, hence spare the mechanical elements and space.

[0065] In the column, "A/B" denotes the native OTG receptacle which allows hosts as well as devices to be plugged in (A and B devices). It should be noted that on this port the controller's role may change dynamically between host and device by using the HNP protocol mentioned above. "A" denotes a receptacle where only devices can plug into and "B" denotes a receptacle where only hosts can plug into. "B" may also be an attached cable with a B-plug.

[0066] In the above table, "Plugging" means the configuration the user plugs together. "H" denotes that the chip acts as host, while "D" denotes that the chip acts as device. The plugging may also change dynamically.

[0067] The column "Application" gives just some examples of what use the respective configuration may be.

[0068] In any of the embodiments discussed above, the controllers keep the different traffic speeds separate. One approach to achieve this is to translate incoming high-speed traffic from the upstream (towards host) port into full/low speed traffic down to the downstream (towards device) port by some kind of transaction translator. For a combined host, this would mean to extend the low-level packet handler with a buffer of sufficient size and the appropriate control logic. The buffer may be filled and/or emptied by pseudo split transactions, since no actual high-speed traffic is connected to them as the pseudo transaction translator sits in the host itself. An advantage of this approach is to use already available (or only slightly extended) infrastructure to fetch and decode the respective descriptors as well as for data DMA. The same may be true for the software: the available software may be used to control a full/low speed device plugged into the host as it would be when plugged into a high-speed hub somewhere downstream.

[0069] A bandwidth vs. area optimization may be made with this approach. It is possible to use either one pseudo transaction translator for all ports with full/low speed devices or assign each such port its own transaction translator.

[0070] Discussing now the device core, each device (each of which can have 31 end points, for example) the SoC supports will connect to a different USB segment. That is, an SoC device in the present embodiment does not share a USB segment with the host, nor would it with another internal device (although this is not mandatory). Hence, the DMA streams issued by a device controller are asynchronous to those of all other ports. As an advantageous consequence, a device virtually does not cause any overhead traffic to system memory (as a host with its descriptor accesses). So, a common port for device and host controller may be on the USB port, determined either at design or plug time. Both controllers could have their individual connection to the system bus. Alternatively (as depicted in **FIGS. 5 and 6**), an internal arbitration for system bus and memory action for host and device may be used. This may lead to a simpler top-level design without penalty since the data traffic from system to memory for hosts and devices is asynchronous anyway and the point of competition for this resource is just moved into the controller device.

[0071] An additional synergy can be obtained by interweaving the device functionality even closer into the host core. As was described above, the combined host controller may need some internal buffer **560**, **615**, **635**, **655**, **675** for the pseudo transaction translator. This buffer could be well used in device mode as DMA buffer, as described above. Further, low level packet handling can be shared such as assembly/disassembly and CRC.

[0072] Also, since three distinct port modes are supported (high-speed host, full/low speed host, device) combining all into one common port core will save some space for applications with less than three ports (because then at least one mode specific controller was unused). On the other hand, it may add flexibility for the platform design as each port available on the SoC could support each port mode (which provides for a broader application range for the same chip).

[0073] Regardless of which of the above-discussed device structures are used, particularly those depicted in **FIGS. 5 and 6**, there are several ways to minimize power consumption. The unification and combination of host and device controller functionality in itself minimizes the overall design size and hence power consumption in comparison to a bundle of individual controllers. Further, a coarse-grain power management can be implemented and executed under software control, e.g., by switching off unused ports and their respective control logic and/or status registers. In addition, a hardware based fine-grain power control can be implemented that uses techniques such as optimized state encoding, automated clock gating depending on the controller's states, etc. It is further noted that the choice of the clock domains allows the operation of the majority of the design at the respectively lowest frequency (the port speed determines the phy clock domains).

[0074] Making now some bandwidth considerations, it may be assumed that all ports in high speed host mode, i.e., all ports to which high speed devices are plugged into, share the same logical USB segment and hence the same data stream, i.e., DMA channel. It is further assumed that each port in full/low speed host mode, i.e., each port to which a full speed or low speed device is plugged into, resides within its own logical USB segment. Further, it is assumed that all ports in host mode, regardless of speed, belong to the same controller software interface so that software handles high-speed and full/low speed traffic within the same scheduling structures, i.e., descriptors. Moreover, each port in the device mode, i.e., each port to which an external host is connected, may be assumed to reside within its own logical USB segment, regardless of speed.

[0075] Under these assumptions, the overall average bandwidth to system memory is then given by:

$$\text{bandwidth}=HT+n\cdot FLT+HO+m\cdot DT$$

where HT denotes the high-speed host data traffic, FLT denotes the full/low speed host data traffic, HO denotes the host overhead and DT denotes the device data traffic. These quantities may be estimated as follows: HT=30 MB/s (e.g., camera plus hard disk), FLT: 1.0 MB/s, HO=1.0 MB/s (descriptor read, status update, moderate NAK rate, i.e. non-acknowledgement rate) and DT=8 MB/s (1 high speed isochronous end point).

[0076] The sustained peak bandwidth may then be calculated to be about 60 MB/s during the transfer of one high-speed packet of 1 kB (kBytes) maximum on each individual USB segment. Alternatively, the global system bus peak bandwidth may be restricted on the expense of bigger local buffers (1 kB per port in the extreme).

[0077] Another issue is system memory latency in connection with maximum burst length. If maximum burst length is less than 1 kB, then multiple accesses are needed to transport a USB packet to/from the system memory. The latency incurred for that may determine the internal buffer size. Alternatively, a system bus that allows for multiple outstanding requests can be used.

[0078] To give an example, if the maximum burst length is 64 bytes and the latency is 2 μs a buffer size of about 0.5 kB may be necessary, assuming 1 kB transfer on the USB in about 16 μs and an overall latency of 1 k/64*2 μs=32 μs, so that the buffer holds an equivalent of 8 memory accesses. In contrast, when multiple outstanding requests are supported on the system bus, the buffer size can be limited to approximately one burst length of 64 bytes, assuming that the actual transfer of this data takes much less than 1 μs. This is because the USB may need about 1 μs to transfer this many data and it may therefore be sufficient to issue a memory request every 1 μs. Consequently, at each given time there may be two memory requests in flight.

[0079] In any of the above-discussed embodiments, the comparators required by the OTG specification for SRP may be not included in a physical device design but may be separate (pad-)cells.

[0080] Given the above-described embodiments, the software interface may also be different from that of conventional controllers. This is because all functionality is combined into one controller which might be reflected by one common memory map. Further, for the SoC, legacy functionality can be dropped, e.g., there may be no need for PCI configuration registers or keyboard emulation. The embodiments may further overcome drawbacks of previous interfaces, for instance by preventing hardware/software race conditions, as they can appear for the EHCI. Moreover, the scheduling of data structures may be optimized for efficiency and small memory footprint. Register files and data structures may be adapted to SoC system bus constraints, for instance with respect to the cache-line boundaries. Moreover, the usage of system resources (for instance, interrupt sources and frequency) may be balanced.

[0081] There may be further reasons for changes in the software interface: for instance, the interface could be ported to other architectures which may bring out changes in address width. These other architectures may provide for more flexible sizing of the memory pages. This may allow the reduction in number of physical page pointers in the descriptors and thus the overhead bandwidth.

[0082] Based on this, the embodiments may use a new software interface, which may further lead to some new low-level driver software to be developed as well.

[0083] As mentioned above, architectures having physical pages greater than the usual 4 kB may be advantageously employed to save system memory and bandwidth on the system bus. The descriptor sizes used for the host interface may be determined by the nature and data payloads of their respective traffic.

[0084] For USB 2.0 isochronous traffic, a high-bandwidth device may move up to 3 kB per USB microframe (125 μs). Software must then be able to distinguish between data moved in each of these microframes. In order to minimize the necessity for software updates on scheduling structures, it may be useful to collect a traffic description for eight consecutive microframes, i.e., one frame of 1 ms into one descriptor, which may have the additional advantage of covering the same time as it used to do for USB 1.1 traffic. Consequently, an EHC descriptor for isochronous traffic may consist of 8 lengths/offsets and pointers to 7 physical pages, to provide the necessary 24 kB with arbitrary offset within a 28 kB window. Using a physical page size of 16 kB as provided by the MIPS architecture would allow the reduction in the size of that descriptor by 5dwords (double-words), thus minimizing the overhead traffic to about 30% since now two page pointers provide a 32 kB window to place the maximum of 24 kB traffic into.

[0085] The picture may be similar for bulk and control traffic. The EHC descriptor may use 5 page pointers to provide for a space of 16 kB, placed into a 20 kB window. The actual sizes may be somewhat arbitrary and may be chosen to balance the software update rate with the descriptor size. It is noted that the overhead bandwidth may almost exclusively be determined by the fact that for each USB transfer, one such descriptor is read and updated, not by the fact that after maximum 20 kB, a new descriptor has to be read.

[0086] In fact, this may influence the rate at which a descriptor cache needs to be updated. However, due to the decision to keep bulk and control traffic in the same scheduling queue for the EHC, a cache is by far not as useful as it could be, since it has to be flushed at a considerable rate, in order not to miss newly linked control descriptors. In contrast, the OHC software interface may be much better in this respect, since it may not only keep bulk and control scheduling lists separate but also provide for a way for software to notify the controller that it has added new descriptors, thus relieving the controller from walking lists of inactive descriptors.

[0087] In an embodiment, a bulk descriptor may be restricted to one physical page of 16 kB length. Either software may be able to guarantee a start offset of zero or the update rate for these new descriptors is slightly higher. However, this may be more than made up for by the minimization of at least 25% (a reduction of three dwords, the dword width the fourth page pointer carries other information that may not fit in the rest of the descriptor).

[0088] Referring to the numerous embodiments described above, a design of an integrated OTG dual-role controller may be implemented almost from scratch, reusing only sub modules of existing blocks. This may advantageously allow for integrated, tailored, legacy-free solutions for embedded SoC applications. Another advantage may be that there may be a single system bus interface. Further, the chip size, power consumption, and system resources such as bus accesses or interrupts may be reduced. In addition, the embodiments may provide the best match to the (internal) physical devices as well as the best match to low-level driver software.

[0089] While the invention has been described with respect to the physical embodiments constructed in accordance therewith, it will be apparent to those skilled in the art that various modifications, variations and improvements of the present invention may be made in the light of the above teachings and within the purview of the appended claims without departing from the spirit and intended scope of the invention. In addition, those areas in which it is believed that those of ordinary skill in the art are familiar, have not been described herein in order to not unnecessarily obscure the invention described herein. Accordingly, it is to be understood that the invention is not to be limited by the specific illustrative embodiments, but only by the scope of the appended claims.

What is claimed is:

1. A USB (Universal Serial Bus) OTG (On-The-Go) controller device comprising:

a first port handler unit configured to provide USB OTG functionality at a first port; and

a second port handler unit configured to provide USB OTG functionality at a second port,

wherein each one of said first and second port handler units is configured to selectively support host and device functionality at the respective first or second port.

2. The controller device of claim 1, wherein host functionality comprises USB 1.1 compliant full speed and/or low speed host functionality and USB 2.0 compliant high speed host functionality.

3. The controller device of claim 1, wherein one of said first and second port handler units is configured to operate as master while the other one of said first and second port handler units is configured to operate as slave when both the first and second port handler units are selectively configured to support the same host functionality.

4. The controller device of claim 3, wherein the master port handler unit is configured to generate data packets and the slave port handler unit is configured to copy the data packets generated by the master port handler.

5. The controller device of claim 1, wherein said first port handler unit and said second port handler unit are of substantially the same hardware structure.

6. The controller device of claim 1, wherein each of said first and second port handler units comprise:

a low level protocol module adapted to handle packet assembly and/or disassembly;

a transfer buffer module adapted to buffer incoming or outgoing data to average out system memory latencies; and

a memory access module adapted to generate memory requests in compliance with said USB host and/or device functionality.

7. The controller device of claim 6, wherein said low level protocol module is further adapted to perform CRC (Cyclic Redundancy Check) generation and/or checking.

8. The controller device of claim 6, wherein said transfer buffer module is a FIFO (First In First Out) transfer buffer module.

9. The controller device of claim 6, wherein said transfer buffer module is further adapted to perform clock translation between the core clock domain and the physical device clock domain.

10. The controller device of claim 6, wherein said memory access module is a DMA (Direct Memory Access) memory access module.

11. The controller device of claim 6, wherein said memory access module is further adapted to enforce system bus limits.

12. The controller device of claim 1, adapted to control data traffic at a predefined number of physical ports, and comprising a predefined number of port handler units including said first and second port handler units, said predefined number of physical ports being the same as said predefined number of port handler units.

13. The controller device of claim 12, wherein said predefined number of physical ports and said predefined number of port handler units are three.

14. An integrated circuit chip having circuitry adapted to control data transfer to and/or from at least one peripheral device selectively having device or host functionality and being connected to a serial bus, said circuitry comprising:

a first port handler circuit configured to control data transfer to and/or from a peripheral device connected to a first port of said integrated circuit chip; and

a second port handler circuit configured to control data transfer to and/or from a peripheral device connected to a second port of said integrated circuit chip,

wherein each one of said first and second port handler circuits is configured to selectively support host and device functionality at the respective first or second port.

15. A USB (Universal Serial Bus) OTG (On-The-Go) controller device comprising:

a first port handler unit adapted to provide USB host functionality to a first OTG capable device connected to a first port of said controller device; and

a second port handler unit adapted to provide USB device functionality to a second OTG capable device connected to a second port of said controller device,

wherein said first port handler unit and said second port handler unit are of substantially the same hardware structure.

16. The controller device of claim 15, wherein said first port handler unit is capable of being configured to support USB device functionality and said second port handler unit is capable of being configured to support USB host functionality.

17. The controller device of claim 15, wherein host functionality comprises USB 1.1 compliant full speed and/or low speed host functionality and USB 2.0 compliant high speed host functionality.

18. The controller device of claim 15, further comprising:

a third port handler unit adapted to provide USB host functionality to a third OTG capable device connected to a third port of said controller device,

wherein one of said first and third port handler units is configured to operate as master while the other one of said first and third port handler units is configured to operate as slave when both the first and third port handler units are selectively configured to support the same host functionality.

19. The controller device of claim 18, wherein the master port handler unit is configured to generate data packets and the slave port handler unit is configured to copy the data packets generated by the master port handler.

20. The controller device of claim 15, wherein each of said first and second port handler units comprise:

a low level protocol module adapted to handle packet assembly and/or disassembly;

a transfer buffer module adapted to buffer incoming or outgoing data to average out system memory latencies; and

a memory access module adapted to generate memory requests in compliance with said USB host and/or device functionality.

21. The controller device of claim 20, wherein said low level protocol module is further adapted to perform CRC (Cyclic Redundancy Check) generation and/or checking.

22. The controller device of claim 20, wherein said transfer buffer module is a FIFO (First In First Out) transfer buffer module.

23. The controller device of claim 20, wherein said transfer buffer module is further adapted to perform clock translation between the core clock domain and the physical device clock domain.

24. The controller device of claim 20, wherein the buffer size of the transfer buffer module of said first port handler unit is different from the buffer size of the transfer buffer module of said second port handler unit.

25. The controller device of claim 20, wherein said memory access module is a DMA (Direct Memory Access) memory access module.

26. The controller device of claim 20, wherein said memory access module is further adapted to enforce system bus limits.

27. The controller device of claim 15, adapted to control data traffic at a predefined number of physical ports, and comprising a predefined number of port handler units including said first and second port handler units, said predefined number of physical ports being the same as said predefined number of port handler units.

28. The controller device of claim 27, wherein said predefined number of physical ports and said predefined number of port handler units are three.

29. The controller device of claim 15, adapted to control data traffic at a predefined number of physical ports, and comprising a predefined number of port handler units including said first and second port handler units, said predefined number of physical ports being greater than said predefined number of port handler units.

30. The controller device of claim 29, wherein said predefined number of port handler units greater than three.

31. The controller device of claim 15, wherein said first port handler unit is restricted in functionality to either USB 1.1 compliant full speed and/or low speed host functionality and USB 2.0 compliant high speed host functionality.

32. The controller device of claim 15, further comprising:

a third port handler unit adapted to provide USB host functionality to a third OTG capable device connected to a third port of said controller device,

wherein the USB host functionality provided by said first port handler unit is USB 1.1 compliant full speed and/or low speed host functionality and the USB host functionality provided by said third port handler unit is USB 2.0 compliant high speed host functionality.

33. The controller device of claim 32, wherein each of said first and third port handler units comprise a transfer buffer module adapted to buffer incoming or outgoing data to average out system memory latencies,

wherein the buffer size of the transfer buffer module of said first port handler unit is different from the buffer size of the transfer buffer module of said third port handler unit.

34. The controller device of claim 15, further comprising:

a port router adapted to assign said first and second ports to said first and second port handler units, respectively.

35. The controller device of claim 15, further comprising:

a bus arbitration unit adapted to arbitrate bus master accesses from said first port handler unit but not from said second port handler unit to the system bus.

36. The controller device of claim 15, further comprising:

a bus arbitration unit adapted to arbitrate bus master accesses from said first port handler unit and said second port handler unit to the system bus.

37. An integrated circuit chip having circuitry adapted to control data transfer to and/or from at least one peripheral device selectively having device or host functionality and being connected to a serial bus, said circuitry comprising:

a first port handler circuit adapted to provide host control functionality to a first peripheral device connected to a first port of said integrated circuit chip; and

a second port handler circuit adapted to provide device control functionality to a second peripheral device connected to a second port of said integrated circuit chip,

wherein said first port handler circuit and said second port handler circuit are of substantially the same hardware structure.

38. A USB (Universal Serial Bus) OTG (On-The-Go) dual-role controller device comprising:

at least one port handler unit configured to provide USB host and/or device functionality at a port to which an OTG capable device is connectable, said at least one port handler unit comprising:

a low level protocol module adapted to handle packet assembly and/or disassembly;

a transfer buffer module adapted to buffer incoming or outgoing data to average out system memory latencies; and

a memory access module adapted to generate memory requests in compliance with said USB host and/or device functionality.

39. The controller device of claim 38, wherein said at least one port handler unit is configured to selectively support host and device functionality at said port.

40. The controller device of claim 38, wherein said at least one port handler unit comprises a first port handler unit capable of being configured to support USB device functionality and a second port handler unit is capable of being configured to support USB host functionality.

41. The controller device of claim 40, wherein USB host functionality comprises USB 1.1 compliant full speed and/or low speed host functionality and USB 2.0 compliant high speed host functionality.

42. The controller device of claim 40, wherein said at least one port handler unit further comprises a third port handler unit adapted to provide USB host functionality,

wherein one of said second and third port handler units is configured to operate as master while the other one of said second and third port handler units is configured to operate as slave when both the second and third port handler units are selectively configured to support the same host functionality.

43. The controller device of claim 42, wherein the master port handler unit is configured to generate data packets and the slave port handler unit is configured to copy the data packets generated by the master port handler.

44. The controller device of claim 38, wherein said low level protocol module is further adapted to perform CRC (Cyclic Redundancy Check) generation and/or checking.

45. The controller device of claim 38, wherein said transfer buffer module is a FIFO (First In First Out) transfer buffer module.

46. The controller device of claim 38, wherein said transfer buffer module is further adapted to perform clock translation between the core clock domain and the physical device clock domain.

47. The controller device of claim 38, wherein the buffer size of the transfer buffer module of said first port handler unit is different from the buffer size of the transfer buffer module of said second port handler unit.

48. The controller device of claim 38, wherein said memory access module is a DMA (Direct Memory Access) memory access module.

49. The controller device of claim 38, wherein said memory access module is further adapted to enforce system bus limits.

50. The controller device of claim 38, adapted to control data traffic at a predefined number of physical ports, and comprising a predefined number of port handler units, said predefined number of physical ports being the same as said predefined number of port handler units.

51. The controller device of claim 50, wherein said predefined number of physical ports and said predefined number of port handler units are three.

52. The controller device of claim 38, adapted to control data traffic at a predefined number of physical ports, and comprising a predefined number of port handler units, said predefined number of physical ports being greater than said predefined number of port handler units.

53. The controller device of claim 52, wherein said predefined number of port handler units greater than three.

54. The controller device of claim 38, wherein said at least one port handler unit is restricted in functionality to either USB 1.1 compliant full speed and/or low speed host functionality and USB 2.0 compliant high speed host functionality.

55. The controller device of claim 38, comprising at least two port handler units adapted to provide USB host functionality, wherein the USB host functionality provided by a first one of said at least two port handler units is USB 1.1 compliant full speed and/or low speed host functionality and the USB host functionality provided by a second one of said at least two port handler units is USB 2.0 compliant high speed host functionality.

56. The controller device of claim 55, wherein each of said first and second port handler units comprise a transfer buffer module adapted to buffer incoming or outgoing data to average out system memory latencies,

wherein the buffer size of the transfer buffer module of said first port handler unit is different from the buffer size of the transfer buffer module of said second port handler unit.

57. The controller device of claim 38, further comprising:

a port router adapted to assign at least one physical port to said at least one port handler units.

58. The controller device of claim 38, further comprising:

a bus arbitration unit adapted to arbitrate bus master accesses from said at least one port handler unit to the system bus.

59. An integrated circuit chip having circuitry adapted to control data transfer to and/or from a peripheral device selectively having device or host functionality and being connected to a serial bus, said circuitry comprising:

at least one port handler circuit configured to provide host and/or device control functionality at a port to which said peripheral device is connectable, said at least one port handler circuit comprising:

a low level protocol circuit adapted to handle packet assembly and/or disassembly;

a transfer buffer circuit adapted to buffer incoming or outgoing data to average out system memory latencies; and

a memory access circuit adapted to generate memory requests in compliance with said host and/or device control functionality.

60. A computer readable storage medium storing instructions specifically adapted to cause a processor, when executed by the processor, to drive a USB (Universal Serial Bus) OTG (On-The-Go) controller device or an integrated circuit chip having circuitry adapted to control data transfer to and/or from a peripheral device selectively having device or host functionality and being connected to a serial bus, where the USB OTG controller device or the integrated circuit chip has at least two port handlers configured to selectively support host and device functionality at the respective port, and/or at least two port handlers adapted to support host and device functionality, respectively, by means of substantially the same hardware structure, and/or at least one port handler configured to provide host and/or device control functionality and comprising a low level protocol unit, a transfer buffer, and a memory access unit.

* * * * *