IN THE UNITED STATES DISTRICT COURT
FOR THE DISTRICT OF DELAWARE

APTIV TECHNOLOGIES LIMITED,	)	
	)	
Plaintiff,	)	
	)	C.A. No. _____
v.	)	
	)	**JURY TRIAL DEMANDED**
MICROCHIP TECHNOLOGY, INC.,	)	
	)	
Defendant.	)	

COMPLAINT FOR PATENT INFRINGEMENT

Plaintiff Aptiv Technologies Limited, for its Complaint against Defendant Microchip Technology, Inc. ("Microchip"), alleges as follows:

NATURE OF THE ACTION

1. This is an action for infringement of U.S. Patent No. 9,619,420 (the "'420 Patent") (Ex. A), U.S. Patent No. 9,645,962 (the "'962 Patent") (Ex. B), U.S. Patent No. 9,460,037 (the "'037 Patent") (Ex. C), U.S. Patent No. 10,545,899 (the "'899 Patent") (Ex. D), and U.S. Patent No. 11,176,072 (the "'072 Patent) (Ex. E) (collectively the "Asserted Patents").

THE PARTIES

2. Plaintiff Aptiv Technologies Limited is a Barbados international business company with a principal place of business at The Financial Services Centre, Bishop's Court Hill, St. Michael, Barbados. Aptiv Technologies Limited is the sole owner of the Asserted Patents.

3. Aptiv Technologies Limited, along with its related entities (collectively "Aptiv"), is focused on making mobility safer, greener, and more connected. Aptiv provides end-to-end solutions for automotive and commercial vehicles, including creating the software and hardware foundations for a variety of vehicle features and functionalities.

4. Aptiv has received numerous awards for its innovative products, such as the 2020 CLEPA Innovation Award for work in leading the development and integration of the world's first vehicle infotainment solution powered by Android Automotive OS with Google apps and services built-in,[1] and being named one of the 2020 World's Most Innovative Companies in the transportation sector.[2] Aptiv has won an Automotive News PACE Award—considered an industry benchmark for innovation—in 25 of the 28 years that the publication has held the event, including in 2021[3] and 2022.[4]

5. Microchip Technology, Inc. is a Delaware corporation with its principal place of business located at 2355 West Chandler Blvd., Chandler, AZ, 85224-6199. Microchip is a leading provider of integrated circuits (often referred to as "microchips" or "chips").

JURISDICTION AND VENUE

6. This civil action arises under the patent laws of the United States, 35 U.S.C. §§ 1, *et seq.* This Court has jurisdiction over the subject matter of this action pursuant to 28 U.S.C. §§ 1331 and 1338.

7. This Court has personal jurisdiction over Microchip, and venue is proper in this district pursuant to 28 U.S.C. § 1400(b), because Microchip is incorporated under the laws of Delaware; has continuous and systematic contacts with the State of Delaware including continuous contacts with, and sales to, customers in Delaware; and has committed acts within

[1] https://www.aptiv.com/en/newsroom/article/aptiv-wins-2020-clepa-innovation-award-for-its-android-infotainment-compute-platform.

[2] https://www.fastcompany.com/90457917/transportation-most-innovative-companies-2020.

[3] https://www.aptiv.com/en/insights/article/aptiv-wins-2021-automotive-news-pace-award.

[4] https://www.aptiv.com/en/insights/article/cvc-earns-aptiv-s-25th-automotive-news-pace-award#:~:text=Aptiv%20this%20week%20was%20named,makes%20software%2Ddefined%20vehicles%20possible.

Delaware giving rise to this action, directly and through subsidiaries or intermediaries, including distributing, offering for sale, selling, using, importing and/or advertising products and services that infringe the claims of the Asserted Patents in Delaware. In addition, Microchip has availed itself of this Court, including in Microchip's prior litigation against Aptiv (*Microchip Technology Inc. v. Aptiv Services US, LLC*, Case No. 17-cv-01194-JDW (D. Del.) (the "2017 Action")) in which Microchip asserted patent infringement claims against Aptiv's products embodying the Asserted Patents in this case.

APTIV'S PATENTED TECHNOLOGY

8. This case relates to Aptiv's technology for Apple CarPlay—a feature that allows iPhone apps to be displayed and used via a vehicle infotainment system. Below is a representative image of an Apple CarPlay display in a vehicle.

https://www.apple.com/ios/carplay/.

9. Apple publicly announced its plans to release the CarPlay feature at its 2013 Worldwide Developers Conference (then named "iOS in the Car"). Because CarPlay relied on a vehicle's built-in infotainment system, it required auto manufacturers (and their suppliers) to

meet particular technical requirements. Apple laid out these requirements in an Accessory Interface Specification, which it enforced through a certification process: only vehicle systems that had been certified by Apple would be allowed to support CarPlay.

10. CarPlay relies on USB technology. USB is a broadly used communication standard that existed long before CarPlay. Under the USB standard, one computer (referred to as a USB "host") controls one or more USB devices. A simple example of a USB network is a computer mouse connected to the USB port of a laptop: the laptop is the host, and the mouse is the device, as depicted in the illustration below.

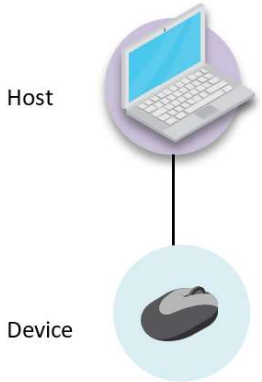

11. A USB network may also include a hub, which provides additional connections between the host and devices. Building on the above example, a USB system with a hub may consist of a laptop host connected via a hub to a flash drive, mouse, and printer—all of which are USB devices—as depicted in the illustration below.

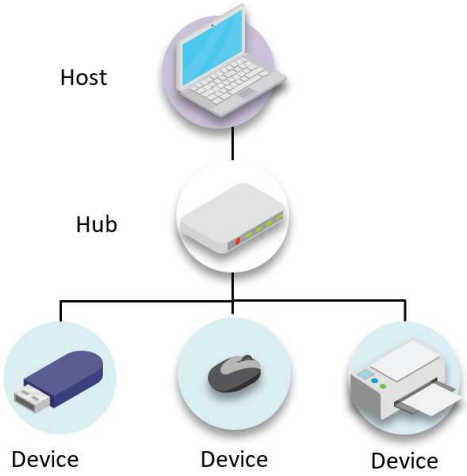

12. Prior to CarPlay, the USB network in a typical vehicle infotainment system had a built-in USB host (often referred to as the "head unit"), various media components (*e.g.*, display screen, speakers, radio), and a USB hub with ports for consumer devices. The driver or passengers could connect their devices to the hub ports to, for example, play music over the vehicle speakers or load map data into the vehicle navigation system. Each of the media components and consumer devices acted as USB devices controlled by the head unit host.

13. In a typical infotainment system at the time, an iPhone would have been treated as a downstream USB device and would have been controlled by the upstream head unit host.

14. CarPlay took a different approach: Apple required the iPhone to act as a USB host while running CarPlay. Thus, to support CarPlay, auto manufacturers and their suppliers had to develop an infotainment system that would accommodate an iPhone acting as a USB host. Because the head unit host typically controlled all devices in the infotainment system—not just consumer devices—it was desirable to have the head unit continue to act as a USB host. But that meant the iPhone would be a second USB host when running CarPlay. This presented several challenges, including that the USB standard does not natively allow for two hosts in the same USB network.

15. Aptiv, through Unwired Technology LLC ("Unwired"),[5] considered several options for a solution to support CarPlay. One of those options relied on an integrated circuit (also known as a "microchip" or "chip") product by Microchip called "FlexConnect." Unwired and Microchip were long-time business partners: typically, Unwired would purchase chips from Microchip, incorporate those chips into its own products, and sell those products to auto manufacturers to incorporate into vehicles.

16. One problem with FlexConnect was that Unwired's (and Aptiv's) customers (the auto manufacturers) made clear that they wanted a solution for CarPlay that did not affect the functionality of the other downstream USB ports in the vehicle that were not connected to the iPhone. This requirement was often referred to as "persistent USB." Providing persistent USB means providing CarPlay without causing consumers to lose the standard USB functionality that they had come to expect when they connected their devices to vehicle USB ports. FlexConnect did not allow for persistent USB: running CarPlay using the FlexConnect solution caused the other USB ports to lose data connectivity and become charging-only ports.

17. Microchip was unwilling or unable to meet the auto manufacturers' demands. Microchip did not believe it was possible to achieve persistent USB, at least without extra components and expense that were not appealing to most auto manufacturers—for example, by relying on a second data connection between the USB hub and head unit host in a "dual lane" (as opposed to "single lane") configuration.

18. Unwired (and later Aptiv), on the other hand, innovated to meet its customers' demands, to great success. The product Unwired and Aptiv developed—the Dual Role Hub, and the Boston 2 chip within it—is an embodiment of inventions claimed in the Asserted Patents.

[5] Aptiv (named Delphi at the time) acquired Unwired in the fall of 2014.

Below is a representative image of the Dual Role Hub:

19. When the Dual Role Hub was first sold in 2015, it was one of the first USB hubs available in the United States that supported CarPlay. Apple CarPlay is now available from every major auto manufacturer and in over 600 vehicle models.

20. In 2016, Aptiv won the Automotive News PACE Award for the Dual Role Hub. The Dual Role Hub was heralded as solving the "vexing problem" of integrating an iPhone with a vehicle infotainment system: "The problem with the CarPlay™ integration came when a driver wanted to access music on another device, play video on a passenger's tablet or listen to music on a passenger's Android phone. The iPhone running CarPlay™ wanted to operate as the sole 'host' device taking control from the car radio and denying access to other devices." Ex. I.

MICROCHIP'S INFRINGING PRODUCTS

21. Microchip was aware of Aptiv's (then Unwired) Dual Role Hub solution by at least July 2014, but dismissed this solution for a variety of reasons, including because Microchip did not think auto manufacturers would commit to a solution from such a small company. As a result, Microchip continued to push FlexConnect with its customers as a viable CarPlay solution despite knowing of the technology's significant limitations.

22. Around the same time, Microchip began further investigating Aptiv's solution—in hopes of debunking it—and concluded (incorrectly) that the architecture was flawed. Under Microchip's view, Unwired's solution was unknown, risky, and unlikely to be compliant with

Apple's requirements or the USB standard.

23. But Microchip did not stop at simply dismissing Unwired's solution internally; instead, it actively misrepresented the technology to automakers (Unwired's potential customers), telling them that Unwired would not be able to obtain USB certification and that the Dual Role Hub would not meet Apple's requirements for CarPlay.

24. In or around October 2014, Microchip learned that Unwired had been acquired by Aptiv, at which point Microchip began looking into developing a competing solution. But, by December 2014, Microchip had yet to find a solution that met the auto manufacturers' requirements. It was not until late January 2015 that Microchip first believed it was even technically feasible to develop a solution comparable to Aptiv's Dual Role Hub. Microchip would not release a viable product until the latter half of 2017.

25. On March 26, 2015, the patent application that led to Aptiv's '037 Patent published (Application No. 14/487,947, which published as Pub. No. 2015/0089092) (the "'947 Application"). The '947 Application was the first to publish of the applications that led to the Asserted Patents—the patents for which the Dual Role Hub is an embodiment of the claimed inventions. The Asserted Patents are all part of the same patent family: following the '037 Patent, each of the other four Asserted Patents issued from applications that are continuations (or continuations-in-part) of the '947 Application. Thus, each of the Asserted Patents, and the '947 Application, have similar patent specifications.

26. On information and belief, Microchip reviewed the '947 Application and used the information therein to develop its own infringing products. Indeed, by July 2015, shortly after the application published, Microchip had a business plan for the infringing products—referred to internally as "Sandia."

27. At minimum, Microchip became aware of the Asserted Patents—and the fact that Aptiv's Dual Role Hub is an embodying product of those patents—as part of the parties' prior litigation, the 2017 Action, wherein Microchip (unsuccessfully) accused the Dual Role Hub of infringing its patents, and wherein the Asserted Patents were exhibits at trial.

28. Microchip has offered and continues to offer its infringing Sandia products—including USB4912, USB4914, and USB4916 (collectively, the "Accused Products")—to automotive hub module manufacturers to unfairly compete with Aptiv's Dual Role Hub.

MICROCHIP'S HARMFUL ACTS

29. Automakers make sourcing decisions for parts and systems years in advance of vehicle production. When a purchase decision is made, it often locks in that supplier's part for a long-term delivery interval. These purchase decisions can be for specific vehicles, a common line of vehicles, or for the entire brand. Changing suppliers is difficult; and purchase commitments are typically long-term supply agreements.

30. In around 2011, Unwired won the supply contract to provide USB hubs for General Motors ("GM"). At the time, Unwired—like all other automotive USB hub manufacturers—relied on Microchip's automotive hub chips. Having secured the GM contract, Unwired approached Microchip to request that it provide better pricing on the hub chips to reflect the significantly increased volume of chips it would be purchasing from Microchip. Microchip, the only manufacturer of the specific hub chips in question, refused to lower its prices.

31. In response, Unwired spoke to a manufacturer about designing its own USB hub chips to avoid reliance on Microchip and its pricing model. The Boston 2 chip was the result of this development project.

32. When the Dual Role Hub with the Boston 2 chip entered the market (after Aptiv acquired Unwired), automakers were immediately interested and Aptiv secured several long-term supply contracts. As a result of Aptiv's Dual Role Hub, the market for CarPlay-enabled USB hubs in a single-lane configuration, with persistent USB, quickly grew in terms of sales. Aptiv won major contracts with each of the "Big Three" U.S. car manufacturers (GM, Ford, and Fiat/Chrysler) for such hubs in or around late 2014 and began shipping Dual Role Hubs in 2015.

33. In response to Aptiv's market success, Microchip began a campaign, working with hub manufacturers (Aptiv's competitors), to undermine Aptiv and its Dual Role Hub. Part of Microchip's efforts to combat Aptiv in the market was to copy Aptiv's solution and employ the patented technology of the Asserted Patents in a line of infringing hub chips. Those infringing hub chips would allow Aptiv's competitors to offer hub modules in a single lane configuration that were CarPlay enabled and provided persistent USB. Microchip referred to this line of infringing hub chips as the Multi-Host Sandia chips.

34. When Microchip's accused Sandia products entered the market in around 2017, Aptiv's Dual Role Hub was the sole product that offered CarPlay functionality and persistent USB in a single-lane configuration. As a result, Aptiv had secured a substantial share of the market for automotive USB hubs because many car manufacturers demanded those features. Aptiv maintained this position until the introduction of Microchip's infringing Sandia products.

35. Since the introduction of the infringing Sandia products, Aptiv has lost significant market share to hub module makers selling hubs equipped with Microchip's infringing Sandia hub chips. Currently, those module makers supply more than half of the automotive USB hubs sold in the United States with CarPlay functionality and persistent USB in a single-lane

configuration. Absent Microchip's infringement, those sales would have gone (and continue to go) to Aptiv.

36. Microchip also actively promoted its infringing chips directly to the car manufacturers and lobbied (sometimes successfully) those car makers to require hub makers to use Microchip's infringing hub chip in their hub modules.

37. Microchip's infringement also resulted in Aptiv facing increased pressure from its customers to offer lower prices, thereby reducing the price, and profit, it received on sales of the Dual Role Hub it made despite Microchip's infringement.

38. In December 2021, in connection with pre-trial negotiations in the 2017 Action, Aptiv informed Microchip of the Asserted Patents and Microchip's infringement. Microchip responded by demanding a license to these patents and threatening to stop supplying chips for Aptiv's other product lines. For several of these products, Microchip was (and continues to be) the sole source of essential chips. For instance, Microchip threatened to stop selling Aptiv the chips required for Aptiv's vehicle safety products. This was a substantial threat because Microchip is the sole supplier of chips critical to Aptiv's vehicle safety business.

FIRST CAUSE OF ACTION

(INFRINGEMENT OF U.S. PATENT NO. 9,619,420)

39. Aptiv incorporates by reference and re-states paragraphs 8 through 38.

40. Microchip directly infringes the '420 Patent at least through making, using, testing, offering to sell, selling, and/or importing into the United States the Accused Products and their prototypes, or directing or controlling another to make, use, test, offer to sell, sell, and/or import into the United States the Accused Products and their prototypes.

41. Microchip offers the Accused Products for sale on its website and through its

sales personnel. Exs. F-H.[6] On information and belief, Microchip manufacturers the Accused Products primarily outside the United States but has manufactured protypes of the Accused Products in the United States and offers to sell, sells, tests, uses, and/or imports into the United States the Accused Products. And to the extent Microchip does not itself make, use, test, offer to sell, sell, and/or import into the United States the Accused Products and their prototypes, Microchip directs or controls another to do so.

42. As described below, Microchip also indirectly infringes the ’420 Patent by inducing its customers, auto manufacturers, and/or infotainment system end users to directly infringe the ’420 Patent, and by contributing to such direct infringement.

43. The Accused Products infringe the ’420 Patent. For example, the Accused Products meet each limitation of at least claim 7 of the ’420 Patent:

a. To the extent the preamble is limiting, each of Microchip’s Accused Products are an “integrated circuit”—i.e., a chip. ’420 Patent, claim 7. Microchip’s website describes each of the Accused Products as a “highly integrated chip.” Exs. F-H.

b. Each of Microchip’s Accused Products also comprises “a USB hub configured to be interconnected to a first USB port connected to a USB host and a second USB port connected to a consumer device.” ’420 Patent, claim 7. Microchip’s website describes each of its Accused Products as “a USB2.0 Hi-Speed Hub” (a USB hub) with an “upstream port for host connection” (a first USB port to be connected to a USB host) and at least one downstream port “with dual role (host/device) physical interfaces” (a second USB port to be connected to a consumer device). Exs. F-H. A Microchip reference document teaches that the USB host that

[6] The webpages for each of Microchip’s Accused Products are substantially the same and attached here as Exhibit F (USB4912), Exhibit G (USB4914), and Exhibit H (USB4916).

connects to the upstream port is a vehicle head unit. Ex. J at 3 ("automotive head unit (USB Host)"). The "dual role" downstream ports allow a consumer device (such as an iPhone) to connect as either a USB device or a USB host.

c. Each of Microchip's Accused Products also comprises "a USB bridge interconnected to the USB hub." '420 Patent, claim 7. Microchip's website describes each of its Accused Products as containing a "Multi-Host Endpoint Reflector" that allows "USB data [to be] 'mirrored' between two USB hosts (Multi-Host) in order to execute USB transactions"—a USB bridge between two hosts. Exs. F-H. The two hosts may be, for example, a vehicle head unit and an iPhone in host mode.

d. The Multi-Host Endpoint Reflector is interconnected to the USB hub. This is supported by the following illustrative example of one of the Accused Products, USB4916, from a Microchip reference document:

FIGURE 2: USB4916 INTERNAL BLOCK DIAGRAM

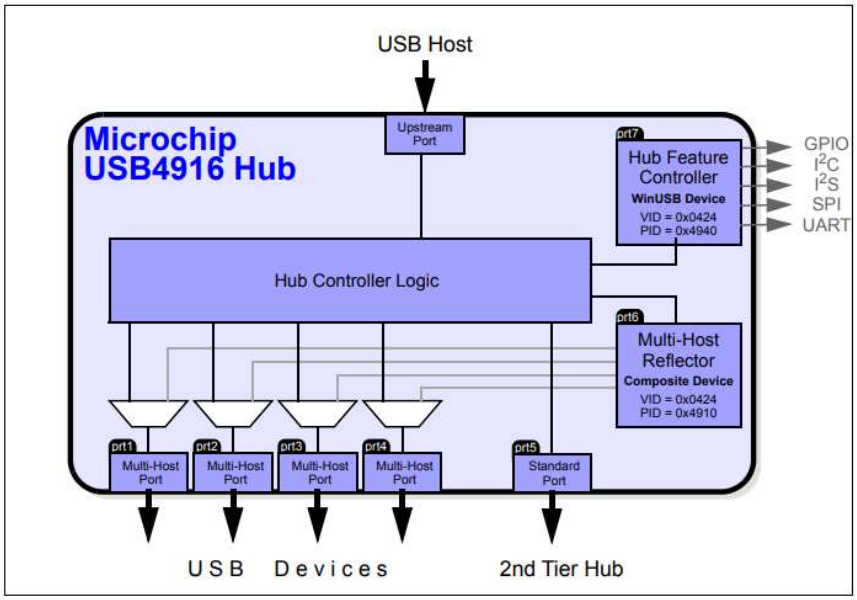

Ex. J at 3.

e. Each of Microchip's Accused Products also comprises "a USB routing

switch interconnected to the USB bridge, the USB hub, and the second USB port, wherein the USB routing switch is configured to connect the second USB port to the first USB port through the USB bridge thereby providing bidirectional initiation of communication between the USB host and the consumer device when the consumer device connected to the second USB port is in a USB host mode and wherein the USB routing switch is configured to connect the second USB port directly to the first USB port through the USB hub, thereby only responding to communication initiated by the USB Host when the consumer device connected to the second USB port is in a USB device mode." '420 Patent, claim 7. This is supported by the following illustrative example of the Accused Products, from a Microchip reference document:

FIGURE 3: MULTI-HOST ENDPOINT REFLECTOR

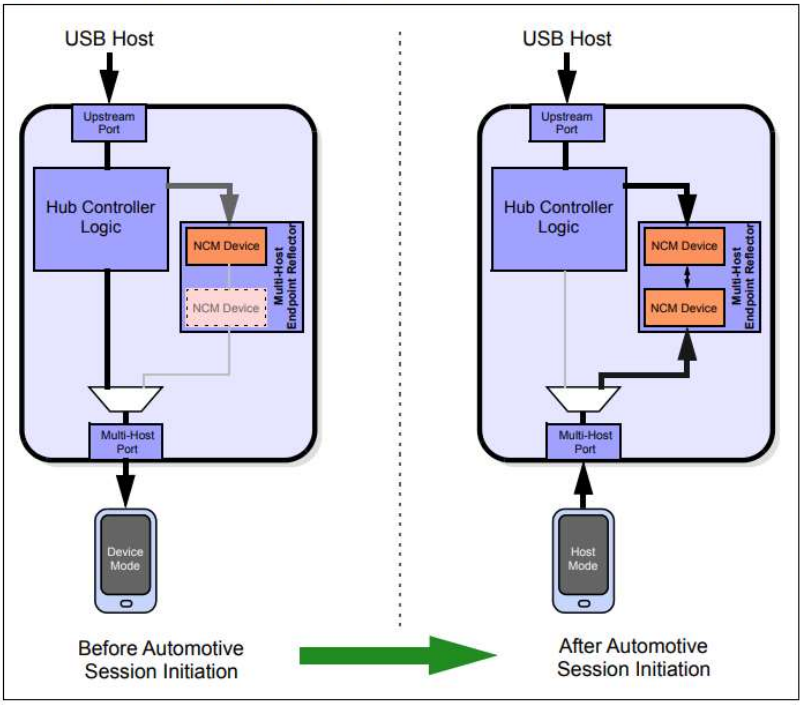

Ex. J at 4.

f. In the Accused Products, when a consumer device is connected through a multi-host port in device mode, the multi-host port (second USB port) connects to the upstream port (first USB port) through the hub, without routing through the Multi-Host Endpoint

Reflector. This allows the USB host connected through the upstream port (vehicle head unit) to connect to the consumer device (*e.g.*, iPhone) while it is acting as a USB device. Pursuant to the USB standard, as a USB device, the consumer device only responds to communication initiated by the USB host.

g. In the Accused Products, when a consumer device is connected through a multi-host port in host mode, the multi-host port is connected to the upstream port through the Multi-Host Endpoint Reflector, which allows the two hosts to communicate bidirectionally.

h. On information and belief, the ability to change the routing of the USB connections between a multi-host port and upstream port described above is facilitated by a USB routing switch interconnected to the Multi-Host Endpoint Reflector, hub, and multi-host ports.

44. Microchip also has and continues to induce and/or contribute to the infringement of the ’420 Patent by its customers, auto manufacturers, and/or infotainment system end users, knowing that its actions would induce and/or contribute to such infringement.

45. On information and belief, Microchip has followed the progress of Aptiv’s patent applications and has known of the ’420 Patent and its claims since at least the time it issued on April 11, 2017.

46. On information and belief, Microchip relied on the ’947 Application—from which a continuation application was filed that led to the ’420 Patent—to develop the Accused Products. As such, the Accused Products are designed to infringe, and to be used in a manner that infringes, the ’420 Patent.

47. At minimum, Microchip has known of the ’420 Patent since the 2017 Action between the parties wherein the ’420 Patent was an exhibit at trial. Microchip has also known since at least the April 2022 trial in the 2017 Action that the Dual Role Hub is an embodying

product of the Asserted Patents. On information and belief, because Microchip designed the Accused Products to compete with and provide the same functionality as the Dual Role Hub, it has known since at least the April 2022 trial in the 2017 Action that the Accused Products infringe the ’420 Patent.

48. Microchip actively encourages its customers, auto manufacturers, and/or end users to infringe claims of the ’420 Patent by providing the Accused Products, advertising how the Accused Products can be used in an infringing manner on its website and reference documents, and advertising and advising its customers and auto manufacturers how to incorporate the Accused Products into an infotainment system and/or automobile in a manner that infringes the ’420 patent.

49. On information and belief, the Accused Products do not have substantial non-infringing uses because the Accused Products are specifically designed to infringe. Microchip advertises on its website that one of the core features of the Accused Products is that they provide “architectures for smart phones that require host / device swapping in order to set-up an automotive session, including graphic user interface, from the mobile device to the head unit display.” Exs. F-H. In other words, the Accused Products are designed to allow smart phones to connect to a head unit as either a USB device or USB host, and therefore support automotive sessions such as Apple CarPlay, which requires that the iPhone act as a USB host while also connected to the head unit display. And as explained in paragraph 43 above, this core functionality of the Accused Products is enabled by architectures that meet each element of at least claim 7 of the ’420 Patent.

50. On information and belief, Microchip actively promotes the infringing capabilities of the Accused Products to convince its customers and auto manufacturers to incorporate the

Accused Products into their products and vehicles. By promoting this functionality, Microchip prompts its customers to encourage the use of the Accused Products in an infringing manner by end users.

51. On information and belief, although Microchip manufactures the Accused Products primarily outside the United States, Microchip encourages its customers and auto manufacturers to incorporate the Accused Products into products and vehicles that are ultimately offered for sale, sold, tested, and/or used in the United States, and/or imported into the United States.

52. At least since the date when Microchip learned of the ’420 Patent, Microchip’s infringement of the ’420 Patent has been willful and deliberate.

53. On information and belief, Microchip will continue to infringe, induce infringement of, and/or contribute to infringement of the ’420 Patent unless enjoined by this Court.

54. As a result of Microchip’s infringement of the ’420 Patent, Aptiv has suffered and will continue to suffer damages in an amount to be proven at trial.

55. Aptiv is entitled to recover damages for pre-suit infringement because it has complied with 35 U.S.C. § 287, including by providing Microchip with actual notice of Aptiv’s claim that Microchip infringes the ’420 Patent.

56. As a result of Microchip’s infringement of the ’420 Patent, Aptiv has suffered and will continue to suffer irreparable harm unless Microchip is enjoined against such acts by this Court.

57. As a result of Microchip’s willful infringement of the ’420 Patent, Aptiv is entitled to an award of its reasonable attorneys’ fees, as provided by 35 U.S.C. § 285.

SECOND CAUSE OF ACTION

(INFRINGEMENT OF U.S. PATENT NO. 9,645,962)

58. Aptiv incorporates by reference and re-states paragraphs 8 through 57.

59. Microchip directly infringes the ’962 Patent at least through making, using, testing, offering to sell, selling, and/or importing into the United States the Accused Products and their prototypes, or directing or controlling another to make, use, test, offer to sell, sell, and/or import into the United States the Accused Products and their prototypes.

60. As described below, Microchip also indirectly infringes the ’962 Patent by inducing its customers, auto manufacturers, and/or infotainment system end users to directly infringe the ’962 Patent, and by contributing to such direct infringement.

61. Microchip offers the Accused Products for sale on its website and through its sales personnel. Exs. F-H. On information and belief, Microchip manufacturers the Accused Products primarily outside the United States but has manufactured protypes of the Accused Products in the United States and offers to sell, sells, tests, uses, and/or imports into the United States the Accused Products. And to the extent Microchip does not itself make, use, test, offer to sell, sell, and/or import into the United States the Accused Products and their prototypes, Microchip directs or controls another to do so.

62. The Accused Products infringe the ’962 Patent. For example, the Accused Products meet each limitation of at least claim 14 of the ’962 Patent:

a. To the extent the preamble is limiting, each of Microchip’s Accused Products are an “integrated circuit”—*i.e.*, a chip. ’962 Patent, claim 14. Microchip’s website describes each of the Accused Products as a “highly integrated chip.” Exs. F-H.

b. Each of Microchip’s Accused Products also comprises “a USB hub

configured to be interconnected to an upstream USB port and a plurality of downstream USB ports, said USB hub configured to broadcast data from the upstream USB port to each downstream USB port and to transmit data from each downstream USB port to the upstream USB port." '962 Patent, claim 14. Microchip's website describes each of its Accused Products as "a USB2.0 Hi-Speed Hub" (a USB hub) with an "upstream port for host connection" (an upstream USB port) and "multiple downstream USB ports" (a plurality of downstream USB ports). And as shown in Microchip's illustrative example of one of the Accused Products, USB4916, the hub is configured to transmit data between each downstream port and the upstream port:

FIGURE 2: USB4916 INTERNAL BLOCK DIAGRAM

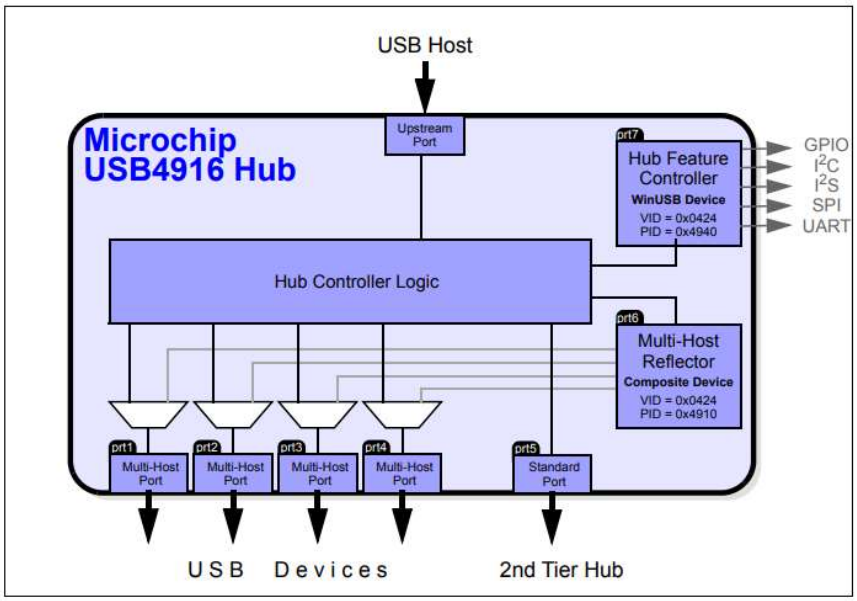

Ex. J at 3.

c. Each of Microchip's Accused Products also comprises "a USB bridge interconnected to the USB hub and configured to connect the upstream USB port to a USB host." '962 Patent, claim 14. Microchip's website describes each of its Accused Products as containing a "Multi-Host Endpoint Reflector" that allows "USB data [to be] 'mirrored' between two USB

hosts (Multi-Host) in order to execute USB transactions"—a USB bridge between two hosts. Exs. F-H. The two hosts may be, for example, a vehicle head unit (which connects through the upstream port) and an iPhone in host mode (which connects through a multi-host port). *See* Ex. J at 3.

d. The Multi-Host Endpoint Reflector is interconnected to the hub and configured to connect the upstream port to a USB host (*e.g.*, iPhone in host mode). This is supported by the illustrative example of USB4916 depicted above.

e. Each of Microchip's Accused Products also comprises "a USB routing switch interconnected to the USB bridge, the USB hub, and the plurality of downstream USB ports, wherein the USB routing switch is configured to connect a first downstream USB port of the plurality of downstream USB ports to the upstream USB port through the USB bridge when a consumer device connected to the first downstream USB port is the USB host and is configured to initiate bidirectional communication with the upstream USB port, and wherein the USB routing switch is configured to connect the first downstream USB port directly to the USB hub when the consumer device connected to the first downstream USB port is configured to only respond to communication from the upstream USB port, thereby rendering the consumer device compatible with a device connected to the upstream USB port." '962 Patent, claim 14. This is supported by Microchip's illustrative example of the Accused Products:

FIGURE 3: MULTI-HOST ENDPOINT REFLECTOR

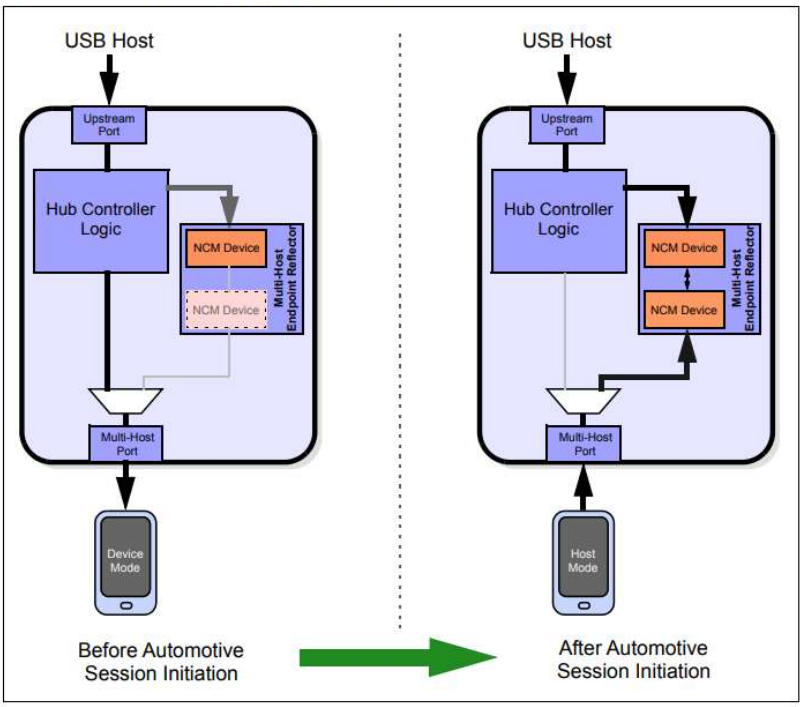

Ex. J at 4.

f. In the Accused Products, when a consumer device is connected through a multi-host port in device mode, the multi-host port (first downstream USB port) connects to the hub, without routing through the Multi-Host Endpoint Reflector. This allows the USB host connected through the upstream port (vehicle head unit) to connect to the consumer device (*e.g.*, iPhone) while it is acting as a USB device. Pursuant to the USB standard, as a USB device, the consumer device only responds to communication initiated by the USB host.

g. In the Accused Products, when a consumer device is connected through a multi-host port in host mode, the multi-host port is connected to the upstream port through the Multi-Host Endpoint Reflector, which allows the two hosts to communicate bidirectionally.

h. On information and belief, the ability to change the routing of the USB connections between a multi-host port and upstream port described above is facilitated by a USB routing switch interconnected to the Multi-Host Endpoint Reflector, hub, and multi-host ports.

63. Microchip also has and continues to induce and/or contribute to the infringement of the ’962 Patent by its customers, auto manufacturers, and/or infotainment system end users, knowing that its actions would induce and/or contribute to such infringement.

64. On information and belief, Microchip has followed the progress of Aptiv’s patent applications and has known of the ’962 Patent and its claims since at least the time it issued on May 9, 2017.

65. On information and belief, Microchip relied on the ’947 Application—from which a continuation-in-part application was filed that led to the ’962 Patent—to develop the Accused Products. As such, the Accused Products are designed to infringe, and to be used in a manner that infringes, the ’962 Patent.

66. At minimum, Microchip has known of the ’962 Patent since the 2017 Action between the parties wherein the ’962 Patent was an exhibit at trial. Microchip has also known since at least the April 2022 trial in the 2017 Action that the Dual Role Hub is an embodying product of the Asserted Patents. On information and belief, because Microchip designed the Accused Products to compete with and provide the same functionality as the Dual Role Hub, it has known since at least the April 2022 trial in the 2017 Action that the Accused Products infringe the ’962 Patent.

67. Microchip actively encourages its customers, auto manufacturers, and/or end users to infringe claims of the ’962 Patent by providing the Accused Products, advertising how the Accused Products can be used in an infringing manner on its website and reference documents, and advertising and advising its customers and auto manufacturers how to incorporate the Accused Products into an infotainment system and/or automobile in a manner that infringes the ’962 patent.

68. On information and belief, the Accused Products do not have substantial non-infringing uses because the Accused Products are specifically designed to infringe. Microchip advertises on its website that one of the core features of the Accused Products is that they provide "architectures for smart phones that require host / device swapping in order to set-up an automotive session, including graphic user interface, from the mobile device to the head unit display." Exs. F-H. In other words, the Accused Products are designed to allow smart phones to connect to a head unit as either a USB device or USB host, and therefore support automotive sessions such as Apple CarPlay, which requires that the iPhone act as a USB host while also connected to the head unit display. And as explained in paragraph 62 above, this core functionality of the Accused Products is enabled by architectures that meet each element of at least claim 14 of the '962 Patent.

69. On information and belief, Microchip actively promotes the infringing capabilities of the Accused Products to convince its customers and auto manufacturers to incorporate the Accused Products into their products and vehicles. By promoting this functionality, Microchip prompts its customers to encourage the use of the Accused Products in an infringing manner by end users.

70. On information and belief, although Microchip manufacturers the Accused Products primarily outside the United States, Microchip encourages its customers and auto manufacturers to incorporate the Accused Products into products and vehicles that are ultimately offered for sale, sold, tested, and/or used in the United States, and/or imported into the United States.

71. At least since the date when Microchip learned of the '962 Patent, Microchip's infringement of the '962 Patent has been willful and deliberate.

72. On information and belief, Microchip will continue to infringe, induce infringement of, and/or contribute to infringement of the ’962 Patent unless enjoined by this Court.

73. As a result of Microchip’s infringement of the ’962 Patent, Aptiv has suffered and will continue to suffer damages in an amount to be proven at trial.

74. Aptiv is entitled to recover damages for pre-suit infringement because it has complied with 35 U.S.C. § 287, including by providing Microchip with actual notice of Aptiv’s claim that Microchip infringes the ’962 Patent.

75. As a result of Microchip’s infringement of the ’962 Patent, Aptiv has suffered and will continue to suffer irreparable harm unless Microchip is enjoined against such acts by this Court.

76. As a result of Microchip’s willful infringement of the ’962 Patent, Aptiv is entitled to an award of its reasonable attorneys’ fees, as provided by 35 U.S.C. § 285.

THIRD CAUSE OF ACTION

(INFRINGEMENT OF U.S. PATENT NO. 9,460,037)

77. Aptiv incorporates by reference and re-states paragraphs 8 through 76.

78. Microchip directly infringes the ’037 Patent at least through using and/or testing the Accused Products and their prototypes or directing or controlling another to use and/or test the Accused Products and their prototypes.

79. As described below, Microchip also indirectly infringes the ’037 Patent by inducing its customers, auto manufacturers, and/or infotainment end users to directly infringe the ’037 Patent, and/or by contributing to such direct infringement.

80. Microchip offers the Accused Products for sale on its website and through its

sales personnel. Exs. F-H. On information and belief, Microchip manufacturers the Accused Products primarily outside the United States but has manufactured protypes of the Accused Products in the United States and offers to sell, sells, tests, uses, and/or imports into the United States the Accused Products. And to the extent Microchip does not itself make, use, test, offer to sell, sell, and/or import into the United States the Accused Products and their prototypes, Microchip directs or controls another to do so.

81. Microchip has and continues to use and/or test the Accused Products in a system that infringes the ’037 Patent. For example, Microchip designs and promotes the Accused Products to be used in a system that meets each limitation of at least claim 1 of the ’037 Patent:

a. To the extent the preamble is limiting, Microchip designs and promotes the Accused Products to be used in a “system disposed within a vehicle.” ’037 Patent, claim 1. Microchip’s website describes each of the Accused Products as a “USB2.0 Hi-Speed ***Automotive*** Hub”; “Recommended for ***Automotive*** Design”; “targeted to ***automotive*** consumer ports”; and includes under “Target Applications,” “Embedded ***Automotive*** Systems.” Exs. F-H (emphases added).

b. Microchip also designs and promotes the Accused Products to be part of a vehicle system comprising “an embedded Universal Serial Bus (USB) Host system.” ’037 Patent, claim 1. A Microchip reference document encourages the use of the Accused Products with an “automotive head unit (USB Host)”—which is an embedded host in a vehicle. *See* Ex. J at 3. This is also supported by the following illustrative example of one of the Accused Products, USB4916, wherein the vehicle head unit is represented by the USB Host that connects through the upstream port:

FIGURE 2: USB4916 INTERNAL BLOCK DIAGRAM

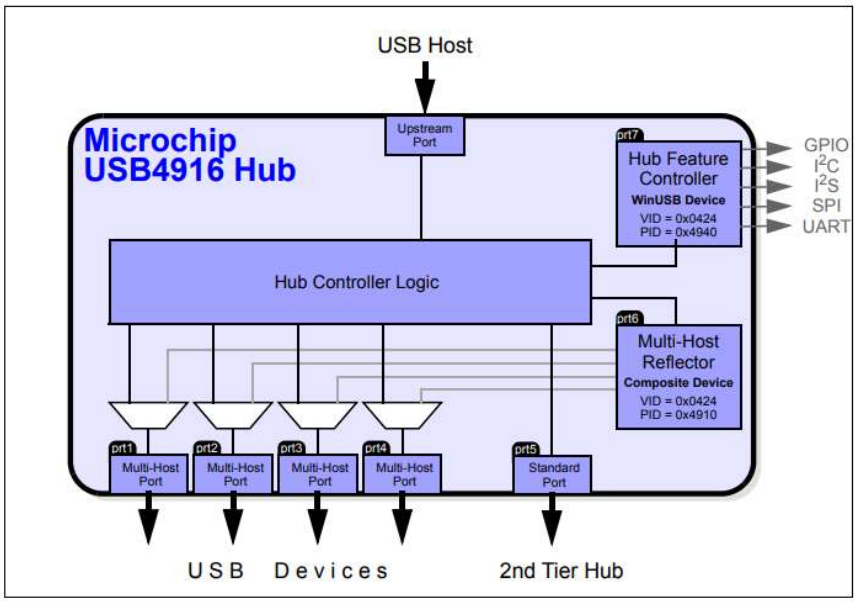

Ex. J at 3.

c. Microchip also designs and promotes the Accused Products to be part of a vehicle system comprising "a USB Hub having a plurality of USB Ports and interconnected to the embedded USB Host system, said USB Hub configured to simultaneously broadcast data from the embedded USB Host system to each USB Port in the plurality of USB Ports and to transmit data from each USB Port to the embedded USB Host system." '037 Patent, claim 1. Microchip's website describes each of its Accused Products as "a USB2.0 Hi-Speed Hub" (a USB hub) with an "upstream port for host connection" (for connection to a vehicle head unit—an embedded USB host) and "multiple downstream USB ports" (a plurality of USB ports). The hub is configured to transmit data between each downstream port and the embedded host (via the upstream port). This is supported by the illustrative example of USB4916 depicted above.

d. Microchip also designs and promotes the Accused Products to be part of a vehicle system comprising "a USB Bridge interconnected to the USB Hub and configured to connect the embedded USB Host system to a second USB Host." '037 Patent, claim 1.

Microchip's website describes each of its Accused Products as containing a "Multi-Host Endpoint Reflector" that allows "USB data [to be] 'mirrored' between two USB hosts (Multi-Host) in order to execute USB transactions"—a USB bridge between two hosts. Exs. F-H. As explained above, Microchip advertises that one of the hosts may be a vehicle head unit (an embedded host); the other host may be, for example, an iPhone in host mode. The Multi-Host Endpoint Reflector is also interconnected to the USB hub. This is supported by the same illustrative example of USB4916 depicted above.

e. Microchip also designs and promotes the Accused Products to be part of a vehicle system comprising "a USB routing switch interconnected to the USB Bridge, the USB Hub, and the plurality of USB Ports, wherein the USB routing switch is configured to connect a first USB Port of the plurality of USB Ports to the USB Hub through the USB Bridge when a consumer device connected to the USB Port is the second USB Host and is configured to initiate bidirectional communication with the embedded USB Host, and wherein the USB routing switch is configured to connect the first USB Port directly to the USB Hub when the consumer device connected to the first USB Port is configured to only respond to communication from the embedded USB Host, thereby rendering the consumer device compatible with the embedded USB Host system." '037 Patent, claim 1. This is supported by Microchip's illustrative example of the Accused Products:

FIGURE 3: MULTI-HOST ENDPOINT REFLECTOR

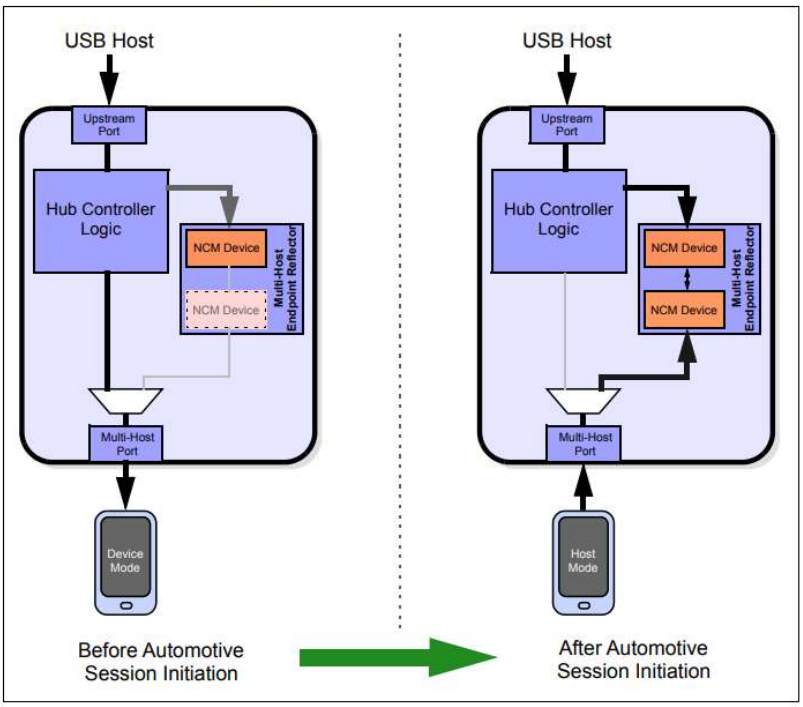

Ex. J at 4.

f. In the Accused Products, when a consumer device is connected through a multi-host port in device mode, the multi-host port (first USB port) connects to the hub, without routing through the Multi-Host Endpoint Reflector. This allows the embedded USB host connected through the upstream port (vehicle head unit) to connect to the consumer device (*e.g.*, iPhone) while it is acting as a USB device. Pursuant to the USB standard, as a USB device, the consumer device only responds to communication initiated by the embedded USB host.

g. In the Accused Products, when a consumer device is connected through a multi-host port in host mode, the multi-host port is connected to the hub through the Multi-Host Endpoint Reflector, which allows the two hosts to communicate bidirectionally.

h. On information and belief, the ability to change the routing of the USB connections between a multi-host port and the hub described above is facilitated by a USB routing switch interconnected to the Multi-Host Endpoint Reflector, hub, and multi-host ports.

82. Microchip also has and continues to induce and/or contribute to the infringement of the ’037 Patent by its customers, auto manufacturers, and/or infotainment system end users, knowing that its actions would induce and/or contribute to such infringement.

83. On information and belief, Microchip has followed the progress of Aptiv’s patent applications and has known of the ’037 Patent and its claims since at least the time it issued on October 4, 2016.

84. On information and belief, Microchip relied on the ’947 Application—from which the ’037 Patent issued—to develop the Accused Products. As such, the Accused Products are designed to be used in a manner that infringes the ’037 Patent.

85. At minimum, Microchip has known of the ’037 Patent since the 2017 Action between the parties wherein the ’037 Patent was an exhibit at trial. Microchip has also known since at least the April 2022 trial in the 2017 Action that the Dual Role Hub is an embodying product of the Asserted Patents. On information and belief, because Microchip designed the Accused Products to compete with and provide the same functionality as the Dual Role Hub, it has known since at least the April 2022 trial in the 2017 Action that the Accused Products are used in a manner that infringes the ’037 Patent.

86. Microchip actively encourages its customers, auto manufacturers, and/or end users to infringe claims of the ’037 Patent by providing the Accused Products, advertising how the Accused Products can be used in an infringing manner on its website and reference documents, and advertising and advising its customers and auto manufacturers how to incorporate the Accused Products into an infotainment system and/or automobile in a manner that infringes the ’037 patent.

87. On information and belief, the Accused Products do not have substantial non-infringing uses because the Accused Products are specifically designed to infringe. Microchip advertises on its website that one of the core features of the Accused Products is that they provide "architectures for smart phones that require host / device swapping in order to set-up an automotive session, including graphic user interface, from the mobile device to the head unit display." Exs. F-H. In other words, the Accused Products are designed to allow smart phones to connect to a head unit as either a USB device or USB host, and therefore support automotive sessions such as Apple CarPlay, which requires that the iPhone act as a USB host while also connected to the head unit display. And as explained in paragraph 81 above, this core functionality of the Accused Products is enabled by architectures that meet each element of at least claim 1 of the '037 Patent.

88. On information and belief, Microchip actively promotes the infringing capabilities of the Accused Products to convince its customers and auto manufacturers to incorporate the Accused Products into their products and vehicles. By promoting this functionality, Microchip prompts its customers to encourage the use of the Accused Products in an infringing manner by end users.

89. On information and belief, although Microchip manufacturers the Accused Products primarily outside the United States, Microchip encourages its customers and auto manufacturers to incorporate the Accused Products into products and vehicles that are ultimately offered for sale, sold, tested, and/or used in the United States, and/or imported into the United States.

90. At least since the date when Microchip learned of the '037 Patent, Microchip's infringement of the '037 Patent has been willful and deliberate.

91. On information and belief, Microchip will continue to induce infringement of and/or contribute to infringement of the ’037 Patent unless enjoined by this Court.

92. As a result of Microchip’s infringement of the ’037 Patent, Aptiv has suffered and will continue to suffer damages in an amount to be proven at trial.

93. Aptiv is entitled to recover damages for pre-suit infringement because it has complied with 35 U.S.C. § 287, including by providing Microchip with actual notice of Aptiv’s claim that Microchip infringes the ’037 Patent.

94. As a result of Microchip’s infringement of the ’037 Patent, Aptiv has suffered and will continue to suffer irreparable harm unless Microchip is enjoined against such acts by this Court.

95. As a result of Microchip’s willful infringement of the ’037 Patent, Aptiv is entitled to an award of its reasonable attorneys’ fees, as provided by 35 U.S.C. § 285.

FOURTH CAUSE OF ACTION

(INFRINGEMENT OF U.S. PATENT NO. 10,545,899)

96. Aptiv incorporates by reference and re-states paragraphs 8 through 95.

97. Microchip directly infringes the ’899 Patent at least through using and/or testing the Accused Products and their prototypes or directing or controlling another to use and/or test the Accused Products and their prototypes.

98. As described below, Microchip also indirectly infringes the ’899 Patent by inducing its customers, auto manufacturers, and/or end users to directly infringe the ’899 Patent, and by contributing to such direct infringement.

99. Microchip offers the Accused Products for sale on its website and through its sales personnel. Exs. F-H. On information and belief, Microchip manufacturers the Accused

Products primarily outside the United States but has manufactured protypes of the Accused Products in the United States and offers to sell, sells, tests, uses, and/or imports into the United States the Accused Products. And to the extent Microchip does not itself make, use, test, offer to sell, sell, and/or import into the United States the Accused Products and their prototypes, Microchip directs or controls another to do so.

100. Microchip has and continues to use and/or test the Accused Products in a manner that infringes the ’899 Patent. For example, Microchip uses and/or tests the Accused Products in a manner that meets each limitation of at least claim 1 of the ’899 Patent:

a. To the extent the preamble is limiting, Microchip uses and/or tests the Accused Products in a “method of supporting data communication between a USB host and a USB enabled consumer device capable of operating in either a USB host mode or in a USB device mode.” ’899 Patent, claim 1. Microchip’s website describes the Accused Products as employing technology “such that USB data is ‘mirrored’ between two USB hosts (Multi-Host) in order to execute USB transactions. This capability is fundamental in delivering architectures for smart phones that require host / device swapping in order to set-up an automotive session, including graphic user interface, from the mobile device to the head unit display.” Exs. F-H. Thus, the Accused Products are designed to support data communication between a USB host (*e.g.*, vehicle head unit) and USB enabled consumer device (*e.g.*, smartphone) operating in host mode or device mode.

b. Microchip also uses and/or tests the Accused Products in a method comprising “providing a USB hub having a plurality of USB ports interconnected to the USB host, said USB hub configured to simultaneously broadcast data from the USB host to each USB port in the plurality of USB ports and to transmit data from each USB port to the USB Host.”

’899 Patent, claim 1. Microchip’s website describes each of its Accused Products as “a USB2.0 Hi-Speed Hub” (a USB hub) with an “upstream port for host connection” and “multiple downstream USB ports” (a plurality of USB ports). The hub is configured to transmit data between each downstream port and the upstream port for connection to a USB host (*e.g.*, vehicle head unit). This is supported by Microchip’s illustrative example of one of the Accused Products, USB4916:

FIGURE 2: USB4916 INTERNAL BLOCK DIAGRAM

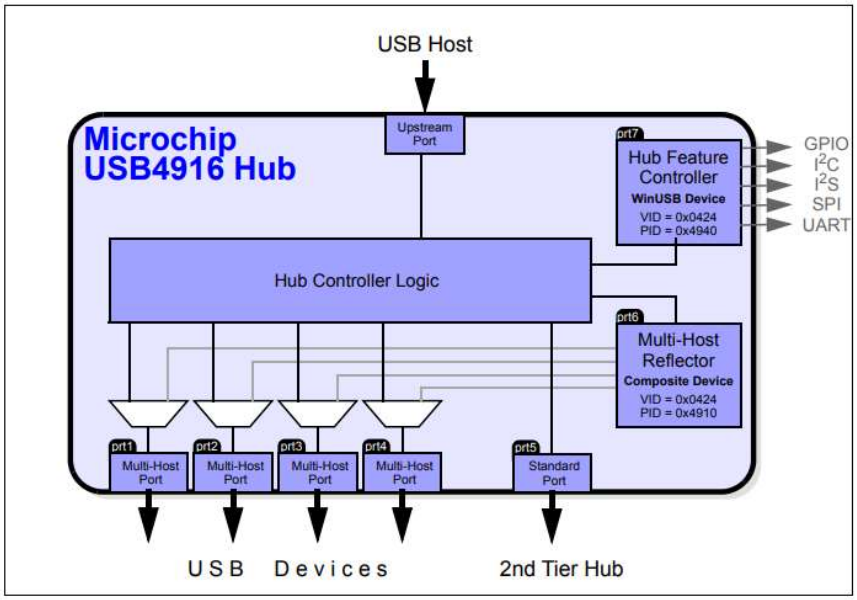

Ex. J at 3.

c. Microchip also uses and/or tests the Accused Products in a method comprising “providing a USB bridge interconnected to the USB hub and configured to connect the USB host to a second USB host.” ’899 Patent, claim 1. Microchip’s website describes each of its Accused Products as containing a “Multi-Host Endpoint Reflector” that allows “USB data [to be] ‘mirrored’ between two USB hosts (Multi-Host) in order to execute USB transactions”—a USB bridge between two hosts. Exs. F-H. The two hosts may be, for example, a vehicle head unit and an iPhone in host mode. The Multi-Host Endpoint Reflector is interconnected to the

USB hub. This is supported by the illustrative example of USB4916 depicted above.

d. Microchip also uses and/or tests the Accused Products in a method comprising "providing a USB routing switch interconnected to the USB bridge, the USB hub, and the plurality of USB ports; automatically configuring the USB routing switch to connect a first USB Port of the plurality of USB ports to the USB hub through the USB bridge when a consumer device connected to the USB host mode port is the second USB host; and automatically configuring the USB routing switch to initiate bidirectional communication with the USB host, wherein the USB routing switch is configured to connect the first USB port directly to the USB hub when the consumer device connected to the first USB port is configured to only respond to communication from the USB host, thereby rendering the consumer device compatible with the USB host." '899 Patent, claim 1. This is supported by Microchip's illustrative example of the Accused Products:

FIGURE 3: MULTI-HOST ENDPOINT REFLECTOR

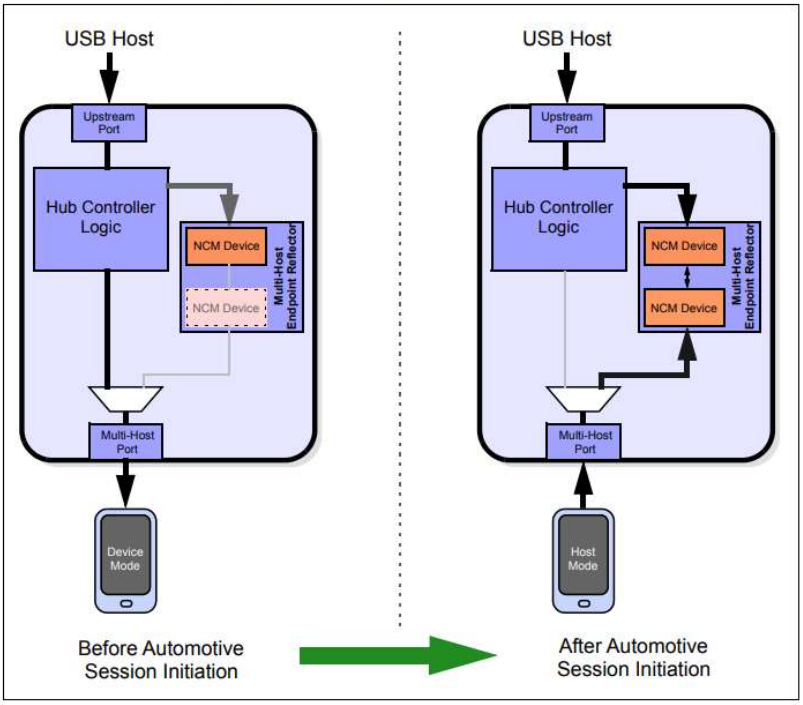

Ex. J at 4.

e. In the Accused Products, when a consumer device is connected through a multi-host port in device mode, the multi-host port (first USB port) connects to the hub, without routing through the Multi-Host Endpoint Reflector. This allows the USB host connected through the upstream port (*e.g.*, vehicle head unit) to connect to the consumer device (*e.g.*, iPhone) while it is acting as a USB device. Pursuant to the USB standard, as a USB device, the consumer device only responds to communication initiated by the USB host.

f. In the Accused Products, when a consumer device is connected through a multi-host port in host mode, the multi-host port is connected to the hub through the Multi-Host Endpoint Reflector, which allows the two hosts to communicate bidirectionally.

g. On information and belief, the ability to change the routing of the USB connections between a multi-host port and the hub described above is facilitated by a USB routing switch interconnected to the Multi-Host Endpoint Reflector, hub, and multi-host ports.

101. Microchip also has and continues to induce and/or contribute to the infringement of the ’899 Patent by its customers, auto manufacturers, and/or infotainment system end users.

102. On information and belief, Microchip has followed the progress of Aptiv’s patent applications and has known of the ’899 Patent and its claims since at least the time it issued on January 28, 2020.

103. On information and belief, Microchip relied on the ’947 Application—from which a continuation application was filed that led to the ’899 Patent—to develop the Accused Products. As such, the Accused Products are designed to be used in a manner that infringes the ’899 Patent.

104. At minimum, Microchip has known of the ’899 Patent since the 2017 Action between the parties wherein the ’899 Patent was an exhibit at trial. Microchip has also known

since at least the April 2022 trial in the 2017 Action that the Dual Role Hub is an embodying product of the Asserted Patents. On information and belief, because Microchip designed the Accused Products to compete with and provide the same functionality as the Dual Role Hub, it has known since at least the April 2022 trial in the 2017 Action that the Accused Products are used in a manner that infringes the '899 Patent.

105. Microchip actively encourages its customers, auto manufacturers, and/or end users to infringe claims of the '899 Patent by providing the Accused Products, advertising how the Accused Products can be used in an infringing manner on its website and reference documents, and advertising and advising its customers and auto manufacturers how to incorporate the Accused Products into an infotainment system and/or automobile in a manner that infringes the '899 patent.

106. On information and belief, the Accused Products do not have substantial non-infringing uses because the Accused Products are specifically designed to infringe. Microchip advertises on its website that one of the core features of the Accused Products is that they provide "architectures for smart phones that require host / device swapping in order to set-up an automotive session, including graphic user interface, from the mobile device to the head unit display." Exs. F-H. In other words, the Accused Products are designed to allow smart phones to connect to a head unit as either a USB device or USB host, and therefore support automotive sessions such as Apple CarPlay, which requires that the iPhone act as a USB host while also connected to the head unit display. And as explained in paragraph 100 above, this core functionality of the Accused Products is enabled by a method that meets each element of at least claim 1 of the '899 Patent.

107. On information and belief, Microchip actively promotes the infringing capabilities

of the Accused Products to convince its customers and auto manufacturers to incorporate the Accused Products into their products and vehicles. By promoting this functionality, Microchip prompts its customers to encourage the use of the Accused Products in an infringing manner by end users.

108. On information and belief, although Microchip manufacturers the Accused Products primarily outside the United States, Microchip encourages its customers and auto manufacturers to incorporate the Accused Products into products and vehicles that are ultimately offered for sale, sold, tested, and/or used in the United States, and/or imported into the United States.

109. At least since the date when Microchip learned of the ’899 Patent, Microchip’s infringement of the ’899 Patent has been willful and deliberate.

110. On information and belief, Microchip will continue to infringe, induce infringement of, and/or contribute to infringement of the ’899 Patent unless enjoined by this Court.

111. As a result of Microchip’s infringement of the ’899 Patent, Aptiv has suffered and will continue to suffer damages in an amount to be proven at trial.

112. Aptiv is entitled to recover damages for pre-suit infringement because it has complied with 35 U.S.C. § 287, including by providing Microchip with actual notice of Aptiv’s claim that Microchip infringes the ’899 Patent.

113. As a result of Microchip’s infringement of the ’899 Patent, Aptiv has suffered and will continue to suffer irreparable harm unless Microchip is enjoined against such acts by this Court.

114. As a result of Microchip's willful infringement of the '899 Patent, Aptiv is entitled to an award of its reasonable attorneys' fees, as provided by 35 U.S.C. § 285.

FIFTH CAUSE OF ACTION

(INFRINGEMENT OF U.S. PATENT NO. 11,176,072)

115. Aptiv incorporates by reference and re-states paragraphs 8 through 114.

116. Microchip directly infringes the '072 Patent at least through using and/or testing the Accused Products and their prototypes or directing or controlling another to use and/or test the Accused Products and their prototypes.

117. As described below, Microchip also indirectly infringes the '072 Patent by inducing its customers, auto manufacturers, and/or end users to directly infringe the '072 Patent, and by contributing to such direct infringement.

118. Microchip offers the Accused Products for sale on its website and through its sales personnel. Exs. F-H. On information and belief, Microchip manufacturers the Accused Products primarily outside the United States but has manufactured protypes of the Accused Products in the United States and offers to sell, sells, tests, uses, and/or imports into the United States the Accused Products. And to the extent Microchip does not itself make, use, test, offer to sell, sell, and/or import into the United States the Accused Products and their prototypes, Microchip directs or controls another to do so.

119. Microchip has and continues to use and/or test the Accused Products in a manner that infringes the '072 Patent. For example, Microchip uses and/or tests the Accused Products in a manner that meets each limitation of at least claim 1 of the '072 Patent:

a. Microchip uses and/or tests the Accused Products in a method of "providing efficient communications among USB components of a data communication system

that includes a first input port, a second input port, a USB hub, a USB bridge connected to the USB hub, an embedded USB host connected to the USB hub, a USB port connected to a USB device capable of operating in a USB Host mode and a USB device mode, and USB multiplexing switches connected to the USB port, the USB hub, and the USB bridge." '072 Patent, claim 1. Microchip's website describes each of its Accused Products as "a USB2.0 Hi-Speed Hub" (a USB hub) with an "upstream port for host connection" (a first input port) and at least one downstream port "with dual role (host/device) physical interfaces" (a second input port and a USB port connected to a USB device capable of operating in host mode or device mode). Exs. F-H. Microchip's website also describes the Accused Products as containing a "Multi-Host Endpoint Reflector" that allows "USB data [to be] 'mirrored' between two USB hosts (Multi-Host) in order to execute USB transactions"—a USB bridge between two hosts. Exs. F-H. A Microchip reference document teaches that the USB host that connects to the upstream port is a vehicle head unit, which is an embedded host. Ex. J at 3 ("automotive head unit (USB Host)").

b. The Multi-Host Endpoint Reflector and embedded host (connected through the upstream port) are each connected to the USB hub. This is supported by Microchip's illustrative example of one of the Accused Products, USB4916:

FIGURE 2: USB4916 INTERNAL BLOCK DIAGRAM

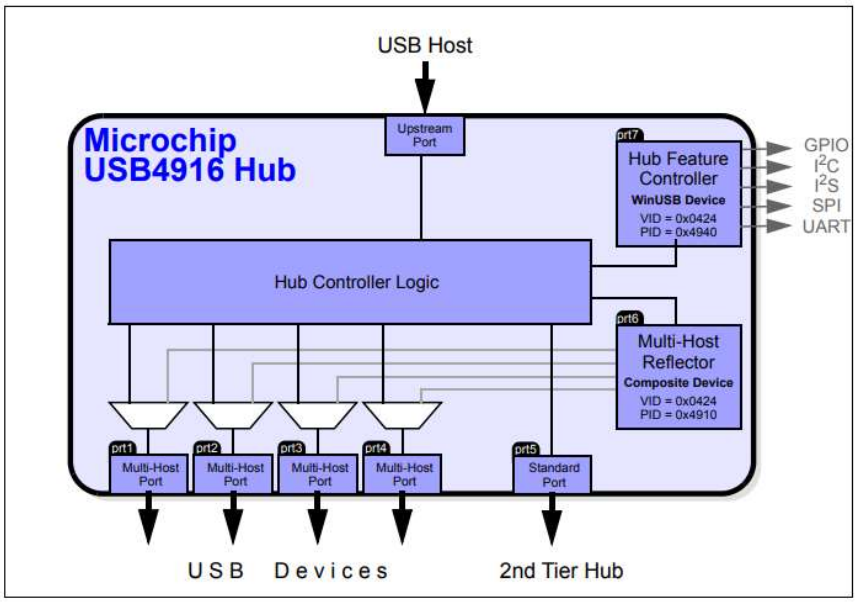

Ex. J at 3.

c. On information and belief, the ability to change the routing of the USB connections between a multi-host port (connected to a USB device capable of operating in host mode or device mode) and upstream port (connected to an embedded USB host)—described in further detail below—is facilitated by USB multiplexing switches connected to the Multi-Host Endpoint Reflector, hub, and multi-host port.

d. Microchip also uses and/or tests the Accused Products in a method comprising "receiving a first USB signal from the USB device via the USB port while the USB device is operating in the USB host mode; routing the first USB signal via the USB multiplexing switches from the USB device to the embedded USB host through the USB bridge and the USB hub; receiving a second USB signal from the USB device via the USB port while the USB device is operating in the USB device mode; and routing the second USB signal via the USB multiplexing switches from the USB device to the embedded USB host through the USB hub, wherein the second USB signal from the USB device to the embedded USB host bypasses the

USB bridge" '072 Patent, claim 1. This is supported by Microchip's illustrative example of the Accused Products:

FIGURE 3: MULTI-HOST ENDPOINT REFLECTOR

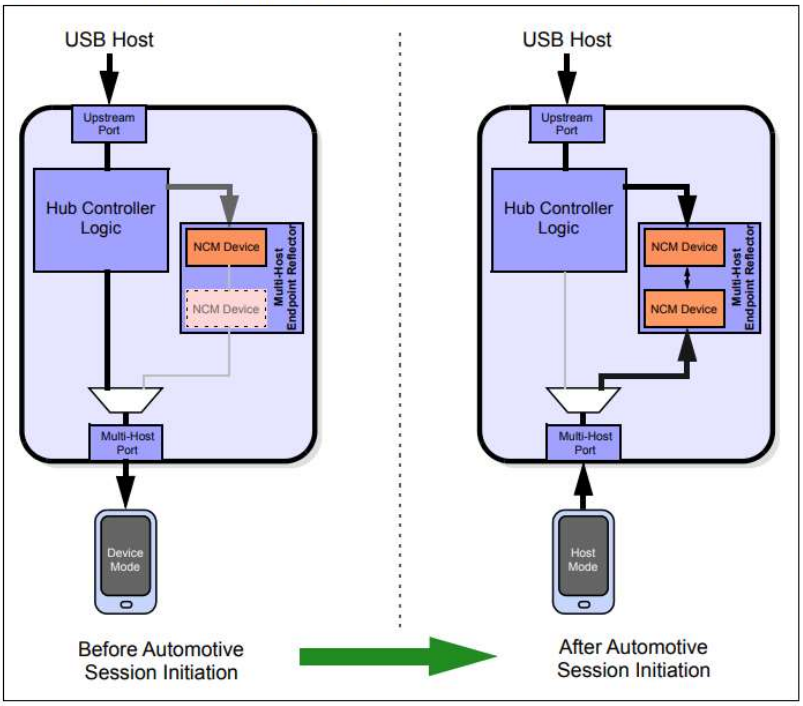

Ex. J at 4.

e. In the Accused Products, when a consumer device is connected through a multi-host port in device mode, the multi-host port (the USB port) connects to the upstream port through the hub, without routing through the Multi-Host Endpoint Reflector. This allows the embedded USB host connected through the upstream port (*e.g.*, vehicle head unit) to connect to the consumer device (*e.g.*, iPhone) while it is acting as a USB device.

f. In the Accused Products, when a consumer device is connected through a multi-host port in host mode, the multi-host port is connected to the upstream port through the Multi-Host Endpoint Reflector and hub.

120. Microchip also has and continues to induce and/or contribute to the infringement of the '072 Patent by its customers, auto manufacturers, and/or infotainment system end users.

121. On information and belief, Microchip has followed the progress of Aptiv's patent applications and has known of the '072 Patent and its claims since at least the time it issued on November 16, 2021.

122. On information and belief, Microchip relied on the '947 Application—from which a continuation application was filed that led to the '072 Patent—to develop the Accused Products. As such, the Accused Products are designed to be used in a manner that infringes the '072 Patent.

123. At minimum, Microchip has known of the '072 Patent since the 2017 Action between the parties wherein the '072 Patent was an exhibit at trial. Microchip has also known since at least the April 2022 trial in the 2017 Action that the Dual Role Hub is an embodying product of the Asserted Patents. On information and belief, because Microchip designed the Accused Products to compete with and provide the same functionality as the Dual Role Hub, it has known since at least the April 2022 trial in the 2017 Action that the Accused Products are used in a manner that infringes the '072 Patent.

124. Microchip actively encourages its customers, auto manufacturers, and/or end users to infringe claims of the '072 Patent by providing the Accused Products, advertising how the Accused Products can be used in an infringing manner on its website and reference documents, and advertising and advising its customers and auto manufacturers how to incorporate the Accused Products into an infotainment system and/or automobile in a manner that infringes the '072 patent.

125. On information and belief, the Accused Products do not have substantial non-infringing uses because the Accused Products are specifically designed to infringe. Microchip advertises on its website that one of the core features of the Accused Products is that they

provide "architectures for smart phones that require host / device swapping in order to set-up an automotive session, including graphic user interface, from the mobile device to the head unit display." Exs. F-H. In other words, the Accused Products are designed to allow smart phones to connect to a head unit as either a USB device or USB host, and therefore support automotive sessions such as Apple CarPlay, which requires that the iPhone act as a USB host while also connected to the head unit display. And as explained in paragraph 119 above, this core functionality of the Accused Products is enabled by a method that meets each element of at least claim 1 of the '072 Patent.

126. On information and belief, Microchip actively promotes the infringing capabilities of the Accused Products to convince its customers and auto manufacturers to incorporate the Accused Products into their products and vehicles. By promoting this functionality, Microchip prompts its customers to encourage the use of the Accused Products in an infringing manner by end users.

127. On information and belief, although Microchip manufacturers the Accused Products primarily outside the United States, Microchip encourages its customers and auto manufacturers to incorporate the Accused Products into products and vehicles that are ultimately offered for sale, sold, tested, and/or used in the United States, and/or imported into the United States.

128. At least since the date when Microchip learned of the '072 Patent, Microchip's infringement of the '072 Patent has been willful and deliberate.

129. On information and belief, Microchip will continue to infringe, induce infringement of, and/or contribute to infringement of the '072 Patent unless enjoined by this Court.

130. As a result of Microchip's infringement of the '072 Patent, Aptiv has suffered and will continue to suffer damages in an amount to be proven at trial.

131. Aptiv is entitled to recover damages for pre-suit infringement because it has complied with 35 U.S.C. § 287, including by providing Microchip with actual notice of Aptiv's claim that Microchip infringes the '072 Patent.

132. As a result of Microchip's infringement of the '072 Patent, Aptiv has suffered and will continue to suffer irreparable harm unless Microchip is enjoined against such acts by this Court.

133. As a result of Microchip's willful infringement of the '072 Patent, Aptiv is entitled to an award of its reasonable attorneys' fees, as provided by 35 U.S.C. § 285.

PRAYER FOR RELIEF

WHEREFORE, Plaintiff Aptiv Technologies Limited seeks relief against Defendant Microchip Technology, Inc. as follows:

(a) for a judgment that Microchip has directly infringed, induced infringement of, and/or contributed to infringement of one or more claims of the Asserted Patents in connection with the Accused Products;

(b) for a judgment and award of all damages sustained by Aptiv Technologies Limited as a result of Microchip's infringement, including supplemental damages for any continuing post-verdict infringement up until entry of the final judgment with an accounting as needed;

(c) for a permanent injunction enjoining Microchip and anyone in concert with Microchip from infringing, inducing infringement of, or contributing to the infringement of the Asserted Patents;

(d) for a judgment that Microchip's infringement has been willful, and an award of enhanced damages pursuant to 35 U.S.C. § 284;

(e) for a judgment and an award of attorneys' fees pursuant to 35 U.S.C. § 285 or as otherwise permitted by law;

(f) for a judgment and an award of all interest and costs incurred; and

(g) for a judgment and an award of such other and further relief as the Court may deem just and proper.

JURY TRIAL DEAMND

Plaintiff Aptiv Technologies Limited demands a trial by jury on all issues presented in the Complaint that are so triable.

POTTER ANDERSON & CORROON LLP

By: */s/ Philip A. Rovner*
Philip A. Rovner (#3215)
Jonathan A. Choa (#5319)
Hercules Plaza
P.O. Box 951
Wilmington, DE 19899
(302) 984-6000
provner@potteranderson.com
jchoa@potteranderson.com

Attorneys for Plaintiff
Aptiv Technologies Limited

OF COUNSEL:

Daralyn J. Durie
Timothy Saulsbury
Eric C. Wiener
Joyce C. Li
MORRISON & FOERSTER LLP
425 Market Street
San Francisco, CA 94105
(415) 568-6034

W. Henry Huttinger
Andrew T. Jones
MORRISON & FOERSTER LLP
707 Wilshire Boulevard
Los Angeles, CA 90017
(213) 892-5200

Dated: March 20, 2023
10695881