IN THE UNITED STATES PATENT AND TRADEMARK OFFICE

BEFORE THE PATENT TRIAL AND APPEAL BOARD

MICROCHIP TECHNOLOGY INC.,
Petitioner,

v.

APTIV TECHNOLOGIES AG AND APTIV TECHNOLOGIES LIMITED,
Patent Owners.

Case No. IPR2024-00558
U.S. Patent No. 9,460,037

PETITIONER'S REQUEST FOR DIRECTOR REVIEW

TABLE OF CONTENTS

LEGAL STANDARD.....3
SUMMARY OF ARGUMENT.....3
THE MAJORITY'S NEW FOOTNOTES.....9
CONCLUSION.....15

In a case of déjà vu, on October 7, 2024, the same Board Majority denied institution in IPR2024-00558 and IPR2024-00494 challenging U.S. Pat. 9,460,037 (the "'037 patent") for the same reasons it previously denied institution in IPR2024-00496 (which challenged U.S. Pat. 10,545,899 (the "'899 patent")). *Compare* IPR2024-00496, Paper 10 with IPR2024-00558, Paper 12 (the "Dec.") and IPR2024-00494, Paper 12. Petitioner requested Director Review in the IPR2024-00496 on September 17, 2024, and that request remains pending. *See* IPR2024-00496, Paper 11 (the "'899 Director Request"). Petitioner respectfully requests Director Review of the Majority's decision denying institution in IPR2024-00558 (and IPR2024-00494)[1] for the same reasons set forth as Petitioner's '899 Director Request.

All three IPRs involve the same parties, the same patent specification, the same relevant claim language (*viz.*, "*a USB [H]ub having a plurality of USB Ports*"), the same prior art, and concern the same issues. Moreover, the Majority's opinion and Dissent are substantively identical (often word-for-word) across the three proceedings. Indeed, the Dissent notes that "the majority repeats [] almost

---

[1] Petitioner is simultaneously filing an identical Director Review request in IPR2024-00494, but submits it would be appropriate for the Director to jointly consider all three Director Review requests due to the common issues raised.

verbatim, the same fact findings, legal precedent, analysis and conclusions that the same majority previously laid out in related IPR2024-00496," and incorporates by reference the 27-page dissent from IPR2024-00496 (hereafter the "Dissent"). Dec., 16. As Petitioner's cover email for the '899 Director Request states:

> In a rare 27-page dissent, a 30-year PTO veteran lays out how the majority abdicated its core responsibility to analyze the prior art, and construe the claims if necessary to do so. The dissent rightly criticized the majority as having "no legal basis" to deny institution, making a "conclusory determination," and "offer[ing] no rhyme or reason" for its decision.
>
> After both the district court and majority found the claims ***not indefinite***, the majority refused to analyze any intrinsic evidence or apply the parties agreed-upon construction that the "having" limitation covered the primary embodiment of the challenged patent. Without a single citation to the prior art in its "Analysis" section, the majority concluded the "having" limitation was not satisfied, a limitation Patent Owner did not even challenge in the POPR.
>
> The majority abused its discretion by failing to: (1) apply the parties' agreed-upon construction or otherwise construe the claims; (2) perform any prior art analysis whatsoever, and (3) address all of Petitioner's arguments.

IPR2024-00496, EX3100, 1; *see also* '899 Director Request, 1-3.

Petitioner first summarizes the common issues from the '899 Director Request, and then provides additional analysis addressing five footnotes the

Majority added in its two recent institution decisions.

LEGAL STANDARD

Director Review of an institution decision is appropriate to address an (1) abuse of discretion, or (2) important issue of law or policy. Revised Interim Director Review Process, §3(A) (Apr. 16, 2024). "Under Director Review, the Board's decision whether to institute trial in an AIA proceeding … is reviewed for abuse of discretion unless the review engages important issues of law or policy, which are reviewed *de novo*." *Id*., §5(A)(ii)(C). Petitioner submits its Director Review request raises important issues of law and policy, but also satisfies the abuse of discretion standard and should be granted under either standard of review.

SUMMARY OF ARGUMENT

The sole independent claim in each of the '899 and '037 patent recites "*a USB Hub* ***having*** *a plurality of USB Ports*" that is "*interconnected to*" various other claimed components. *Compare* EX1001, cl. 1 with EX1007, cl. 1. Petitioner asserted in district court the claims were indefinite because the recited connections (*e.g.*, interconnecting a USB port or hub to itself) made no sense. *See* EX1080, 13-14 (summarizing argument).

The IPR petition, however, was contingent on the district court finding the claims not indefinite. Paper 2 ("Petition"), 26-30 ("Petitioner argues in district court that claim 1 is indefinite. [] But if the district court adopts Aptiv's proposed

interpretation of claim 1 [citing Aptiv's claim construction brief and infringement contentions], the PTAB should analyze patentability under the district court's claim construction."). And the district court found claim 1 (of both the '037 and '899 patents) not indefinite. EX1080, 2, 13-16. So, too, did the Board. Dec., 13-14.

The Petition explained that "[i]f the claims are not indefinite, it is because the claimed 'USB Hub' (shown in blue below in Fig. 4 of the '037 patent) is deemed to 'ha[ve]' a plurality downstream consumer facing USB ports (circled in red), even though the ports are not actually part of the "USB Hub." Pet., 28-29.

Figure 4

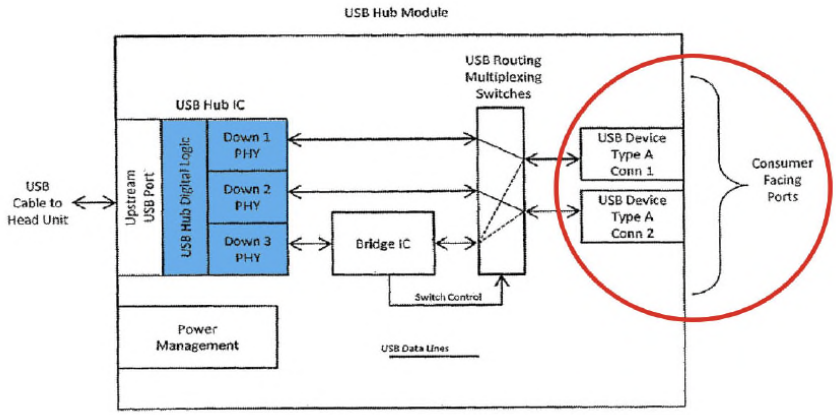

Id., 29 (showing annotated version of '037 patent, Fig. 4). Aptiv described the "*having*" relationship as the USB hub being "interconnected to" or "possess[ing]" a plurality of downstream ports. *Id*. (citing Aptiv's claim construction briefing and infringement contentions). Petitioner expressly stated that "[r]egardless of the

phrasing, Aptiv's position is that downstream consumer ports satisfy the claim and render it not indefinite. Petitioner demonstrates unpatentability of the Challenged Claims under this construction." *Id*., 29-30. Petitioner noted that regardless of how phrased (*e.g.*, as "interconnected to" or "possessing"), "the results are the same" when applying the prior art. *Id*., 30.

Pages 56-60 of the Petition mapped the Chang prior art to the claim limitation, showing that the prior art disclosed the limitation in the same way depicted and described in the primary embodiment of the '037 patent. Petitioner cited the Chang reference and identified the "*USB hub*" as "*having*" the "*plurality of USB ports*" as shown below.

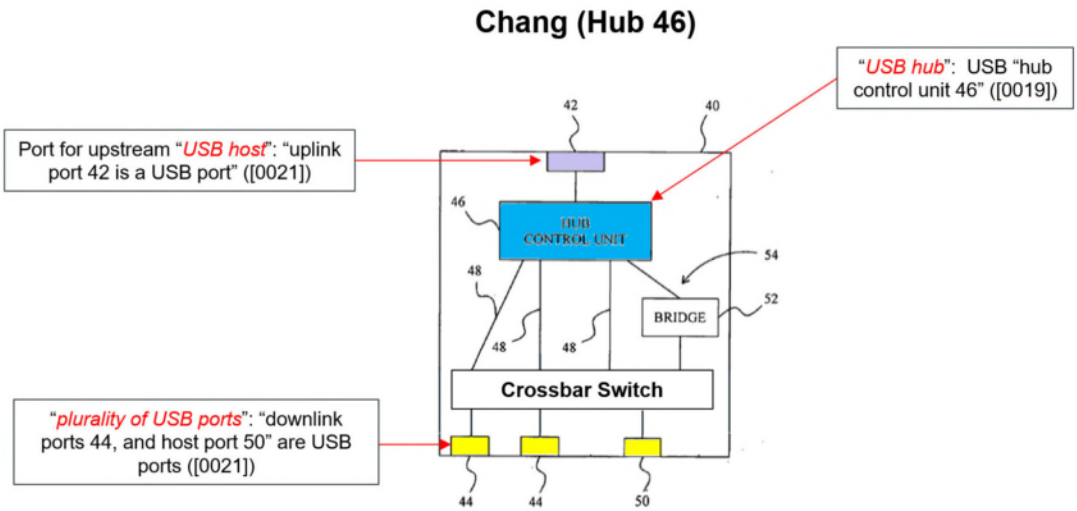

Id., 58 (citing EX1014 (Chang), Fig. 3 (as modified and annotated in the Petition)). Petitioner expressly stated it was applying the "*having*" limitation as previously described in which "'037 patent Figs. 4-5 show the hub 'interconnected' through

the routing [crossbar] switch/logic to the downstream USB ports." *Id*., 56.

The Majority ignored all of this. *See generally* Dec. Beyond agreeing the claim was not indefinite, the Majority did no analysis to determine whether the "*having*" limitation covered downstream ports as shown in the '037 patent as Petitioner contended. *Id*., 10-12. Even though Petitioner cited specific intrinsic evidence (*e.g.*, Fig. 4), the Majority excused itself from performing any analysis at all because Petitioner ***also*** cited to the parties' district court briefing, which the Majority characterized as "improper incorporation by reference." *Id*., 10-11.[2] Then, having done no claim construction analysis, the Majority concluded—with no prior art analysis whatsoever—"the Petition fails to provide a showing that the cited art teaches or suggests [the '*having*' limitation] as recited in sole independent claim 1." *Id*., 13-14. Indeed, the Majority's "Analysis" section lacks a single prior art citation. *Id*. The Majority again sought to excuse itself because "Petitioner contended, in the district court litigation, that 'having' as recited in claim 1 rendered the claim 'nonsensical' and, thus, indefinite." *Id*., 13.

The lynchpin for the Majority's conclusion that Chang fails to satisfy the

---

[2] The Dissent—the only Board member to analyze the claim—readily concluded the "*having*" limitation "refers to 'providing a USB hub interconnecting a plurality of (downstream consumer facing) USB ports to the USB host.'" Dissent, 21.

"*having*" limitation is a complete non-sequitur and is found on pages 13-14 of the Decision. The Majority concludes, with no analysis, that the limitation is not met because "the District Court considered whether 'having' had the same meaning in the context of claim 1 of the '037 patent as 'interconnected to' or 'possessing' and determined that these terms were not equivalent," and the Majority "agree[s] with the District Court." Dec., 13-14. But it doesn't matter whether "interconnected to" or "possessing" are synonymous or equivalent to "*having*."[3] All that matters is whether the claimed "*USB Hub* ***having*** *a plurality of USB Ports*" reads on a hub with downstream ports shown in '037 patent Fig. 4, which both parties agree it does. The Dissent understood this and agreed as well: "while the plain meaning of 'having' is not equivalent to 'interconnected to,' … construing 'having' to encompass 'interconnected to' more accurately captures the essence of the invention to provide a USB hub interconnecting a plurality of (downstream consumer facing) USB ports." Dissent, 21.

---

[3] The Majority also ignored Petitioner's alternative argument that "[if] Aptiv argues 'possessing' is narrower than 'interconnected to' and further requires ports that are part of the 'USB Hub' itself (instead of just downstream consumer facing ports), a POSITA would understand that Chang's transmission paths 48 and 54 connect to the 'USB Hub' (hub control unit 46 or hub 40) via USB ports." Pet., 59.

By way of analogy, a zebra is not synonymous with a horse because a zebra has stripes. But that doesn't matter when the question is whether both animals have four legs. Here, the relevant question is simply whether the claim covers the primary embodiment of the '037 patent where a hub "*ha[s]*" USB ports even though they are located downstream of the hub, not whether "*having*" is synonymous with "interconnected to." The Dissent had no trouble performing the relevant analysis, and easily concluded that "[a] POSITA, having read the entire '899 patent would readily appreciate that, when read in light of the Specification, the disputed claim requires a hub interconnecting a plurality of USB ports (i.e., USB consumer facing ports) to the USB host." Dissent, 21. The Chang prior art shows the exact same thing. *See* Pet., 56-59.

The Majority abused its discretion in (1) refusing to ascertain the scope of the claim (*viz*., whether it encompasses downstream ports as the primary embodiment of the '037 patent shows), and (2) failing to analyze Petitioner's showing that the art satisfied the "*having*" limitation (under any interpretation).

The Majority's failure in this regard is all the more glaring because Patent Owner never even argued that Petitioner's prior art did not teach the "*having*" limitation. *See generally* Paper 9 (arguing motivation to combine, not the lack of any claim element). To the contrary, Patent Owner's expert expressly admits in his POPR declaration that "a POSITA would understand that the plurality of USB

ports must include the downstream ports where consumer devices can connect. No other reading is consistent with the claims or the purpose of the invention." EX2001, ¶96; *see also id*. ¶98 ("a POSITA would conclude that the term 'plurality of USB ports' must refer to ports downstream of the hub."). Patent Owner's expert further explained that "[t]he hub 'has' the downstream consumer facing ports because they are connected to the USB network through the hub." *Id*., ¶99. Thus, there is no dispute that the claimed USB hub "*ha[s]*" downstream consumer ports by virtue of being connected to them, as shown in '037 patent Fig. 4.

In summary, the Majority abused its discretion by: (1) failing to apply a construction of "*having*" that the parties agreed upon (*viz.*, as covering downstream consumer ports) or otherwise construing the claims; (2) failing to perform any prior art analysis at all, and (3) failing to address all of Petitioner's arguments.

THE MAJORITY'S NEW FOOTNOTES

As mentioned, the most notable differences between the Majority's institution decision in IPR2024-00496 (concerning the '899 patent) and its institution decisions in IPR2024-00494 and IPR2024-00558 (concerning the '037 patent) are the inclusion of five additional footnotes (fn. 2, 3, 6, 7, and 8), which Petitioner addresses here. These footnotes in no way fix the Majority's abuses of discretion described above. Indeed, to the contrary, the footnotes serve to highlight the Majority's fatally flawed approach.

Footnote 2 (Dec. at 9). In footnote 2, the Majority references Petitioner's request for a preliminary reply (EX3001, which the Board denied) to provide context for the district court's *Markman* statement that it would "not construe" the "*having*" limitation. EX1080, 16. But there is no dispute the district court ***did construe*** the term as not indefinite. *Id*. ("I hold that the term is not indefinite."). And it is well-established that "[i]ndefiniteness is a matter of claim construction." *Praxair, Inc. v. ATMI, Inc.*, 543 F.3d 1306, 1319 (Fed. Cir. 2008). That the district court did not "further constru[e]" (EX1080, 16) the "*having*" limitation is irrelevant because the non-indefiniteness contingency was met (Pet., 26-30).

The Majority correctly observed that, beyond the indefiniteness issue, "[n]either party proposed a construction in the district court litigation." Dec., fn.2. But that is precisely the point: Petitioner's contingency was simply a district court finding of non-indefiniteness, not any specific articulation of "*having*." It would have made no sense for Petitioner to make its Petition contingent on specific verbiage that neither party even proposed in the district court *Markman* briefing.

Once the district court (and Majority) found the claims not indefinite, it was incumbent upon the Board to determine whether the "*having*" limitation encompassed downstream consumer ports, as the Petition expressly argued was the case (*see* Pet., 29, identifying the hub and downstream ports in '037 patent Fig. 4), and which Patent Owner's own expert repeatedly testified the claim covered

(EX2001, ¶¶96-99).[4] The Majority abused its discretion in failing to apply an agreed upon construction, or otherwise perform a claim construction analysis.

Footnote 3 (Dec. at 10). The Majority first asserts that "the only contingency upon which the Petition is based" is a district court ruling that "the term 'having' means 'interconnected to.'" Dec., 9-10. It then appends footnote 3 to that paragraph, and states "Petitioner does not argue, for example, that trial should be instituted, if in the district court litigation, claim 1 is not found to be indefinite and the disputed language in claim 1 is not construed." Dec., fn.3.

But the Petition's claim construction section expressly states that "[i]f the claims are not indefinite, it is because the claimed 'USB Hub' (shown in blue below in Fig. 4 of the '037 patent) is deemed to 'ha[ve]' a plurality downstream consumer facing USB ports (circled in red), even though the ports are not actually part of the 'USB Hub.'" Pet., 28. Thus, Petitioner clearly set forth the relevant subject matter the claim covers by pointing to the intrinsic evidence (*viz.*, the primary embodiment of Fig. 4). The Petition further expressly states that

---

[4] Had the Majority concluded claim 1 was indefinite, it would still be required to determine if a prior art analysis was possible and, if so, to conduct the analysis. *Intel Corp. v. Qualcomm Inc.*, 21 F.4th 801, 812-14 (Fed. Cir. 2021). The *Intel* logic applies with even more force here, where the claim was found not indefinite.

"***[r]egardless of the phrasing***"[5] of the "*having*" limitation, "Petitioner demonstrates unpatentability of the Challenged Claims under this construction [*viz.*, encompassing downstream consumer ports]." *Id*., 29-30 (emphasis added). Again, the Majority simply ignores all of this, and in doing so abuses its discretion.

Footnote 6 (Dec. at 11). Footnote 6, which does nothing more than identify bolded headings in the Petition, is innocuous and changes nothing.

Footnote 7 (Dec. at 12). In footnote 7, the Majority asserts "[t]here is no agreed-upon construction of the phrase 'a USB Hub having a plurality of USB ports' as recited in claim 1. As noted, Petitioner argues this phrase renders claim 1 indefinite." Dec., fn.7. The first sentence is demonstrably incorrect, and the second sentence (while true) is irrelevant. On the latter point, in a different IPR between the same parties where Aptiv was petitioner, the Board held it simply did not matter to the IPR that Aptiv argued for indefiniteness in district court ***because***

---

[5] Petitioner's prior art analysis invoked the "interconnected to" language because Aptiv admitted "[a]lthough claim 1 states 'A USB Hub ***having*** a plurality of USB Ports,' a POSA would understand from the surrounding claim language and patent specification that [it] should read instead 'a USB hub ***inter-connected to*** a plurality of USB Ports.'" Pet., 29-30 (quoting EX1072, 339 (emphasis in original)). But Petitioner stated "the results are the same if 'possessing' was used." Pet., fn.11.

it lost. IPR2024-00646, Paper 11, 25 (instituting trial where "the district court … held [Aptiv] did not meet its burden of showing that any claims were indefinite. … Thus, it would have been unnecessary and futile for [Aptiv] to have argued in the Petition that limitation 1[d] is indefinite."). The same should hold true here.

Similarly, here, Petitioner argued for indefiniteness in district court ***and lost***. *See* EX10180, 2 (finding the claims "not indefinite"). Having lost on indefiniteness, there ***was agreement*** that the "*having*" limitation covered downstream USB ports as shown by '037 patent Fig. 4. Whether framed as an agreed-upon construction or an agreement as to subject matter that falls within the scope of the claim is irrelevant. It is blackletter law, and routine practice, that the Board need not fully construe a claim when not necessary to resolve a dispute. Here, the parties agreed to what the claim, if not indefinite, includes within its scope.

Indeed, concerning identical claim language in the '899 patent, Patent Owner stated "a POSITA would understand that the plurality of USB ports the hub 'has' must include downstream ports," and that "the meaning of the claim has always been apparent from reading the patent." IPR2024-00496, Paper 7, 19. Patent Owner further asserted "there is only one reasonable interpretation of this term," which is that "the ports the hub 'has' must include downstream ports," and explains why. *Id*., 20.

And it is what Patent Owner's own POPR expert in this proceeding expressly testified: "a POSITA would understand that the plurality of USB ports must include the downstream ports where consumer devices can connect. No other reading is consistent with the claims or the purpose of the invention." EX2001, ¶96; *see also id*. ¶98 ("a POSITA would conclude that the term 'plurality of USB ports' must refer to ports downstream of the hub."). Patent Owner's expert further explained that "[t]he hub 'has' the downstream consumer facing ports because they are connected to the USB network through the hub." *Id*., ¶99.

The Petition asserted (Pet., 28-29) and showed how Chang's hub met the claim because Chang's hub was connected to, and encompassed, downstream USB ports in "the same way '037 patent shows these elements connected" (*id*., 56-60).

Thus, the Majority's assertions that (1) "Patent Owner does not provide any argument or evidence relating to construction of [the 'having'] phrase" (Dec., 12), (2) that the term's meaning is not "persuasively argued or adequately supported by either party" (*id*.), and (3) that "[t]here is no agreed-upon construction of the phrase" (*Id*., fn.7) are without support, ignore the evidence and argument from both parties, and constitute an abuse of discretion.

Footnote 8 (Dec. at 12). In footnote 8, the Majority states "Petitioner contends that the parties had an agreed-upon construction relating to the phrase 'a USB Hub having a plurality of USB ports.' … This is inaccurate. Petitioner does

not direct our attention to any such agreement and we find none in the record of that or this proceeding." This is substantively the same point as footnote 7 and is addressed immediately above. Regardless, had the Majority done an independent analysis like the Dissent (which resulted in an interpretation consistent with both parties assertions), it would have concluded that "because 'interconnected' better captures the essence of the claimed invention in the '[037] patent, the proposed replacement is reasonable for the purpose of claim analysis." Dissent, 29.

CONCLUSION

Because the same Board Majority that abused its discretion when denying institution in IPR2024-00496 did so again in the exact same ways in two subsequent IPR institution decisions, Petitioner requests Director Review of the decisions denying institution in IPR2024-00494 and IPR2024-00558.

Respectfully submitted,

Dated: October 18, 2024

By: */Travis Jensen/*

Travis Jensen
Registration No. 60,087
Orrick, Herrington & Sutcliffe LLP
1000 Marsh Road
Menlo Park, CA94025-1015
T: 650-614-7400
F: 650-614-7401
T61PTABDocket@orrick.com

Attorney for Petitioner

CERTIFICATE OF SERVICE

The undersigned certifies that on October 18, 2024, a copy of the following was served in its entirety via electronic mail, upon the following attorneys of record for the Patent Owner:

Alex S. Yap	ayap@mofo.com
Mehran Arjomand	marjormand@mofo.com
Timothy Chen Saulsbury	tsaulsbury@mofo.com
Eric C. Wiener	ewiener@mofo.com
Andrew L. Perito	aperito@mofo.com
Andrew T. Jones	andrewjones@mofo.com
Bryan Blumenkopf	bblumen@mofo.com
Adam R. Brausa	abrausa@mofo.com
Clinton W. Ewell	cewell@mofo.com
MORRISON & FOERSTER LLP	
	Aptiv-Microchip-PTAB@mofo.com

/Karen Johnson/

Karen Johnson