US008180078B2

(12) **United States Patent**
Zellner

(10) **Patent No.: US 8,180,078 B2**
(45) **Date of Patent: May 15, 2012**

(54) **SYSTEMS AND METHODS EMPLOYING MULTIPLE INDIVIDUAL WIRELESS EARBUDS FOR A COMMON AUDIO SOURCE**

(75) Inventor: **Samuel Zellner**, Dunwoody, GA (US)

(73) Assignee: **AT&T Intellectual Property I, LP**, Atlanta, GA (US)

(*) Notice: Subject to any disclaimer, the term of this patent is extended or adjusted under 35 U.S.C. 154(b) by 1187 days.

(21) Appl. No.: **11/955,389**

(22) Filed: **Dec. 13, 2007**

(65) **Prior Publication Data**

US 2009/0154739 A1 Jun. 18, 2009

(51) **Int. Cl.**
H04R 5/033 (2006.01)

(52) **U.S. Cl.** **381/311**; 381/309

(58) **Field of Classification Search** 381/74, 381/80, 81, 311, 330, 384, 309
See application file for complete search history.

(56) **References Cited**

U.S. PATENT DOCUMENTS

6,810,987	B1	11/2004	DeKalb	
2004/0051788	A1 *	3/2004	Oka et al.	348/211.99
2007/0147629	A1 *	6/2007	Chiloyan	381/74

FOREIGN PATENT DOCUMENTS

WO WO-2006064170 A1 * 6/2006

OTHER PUBLICATIONS

Release your JABRA, Jabra BT 320s, http://jabra.com, printed Dec. 12, 2007.
LG Bluetooth Stereo Headset HBS-110, http://buywirelessnow.com, printed Dec. 12, 2007.

* cited by examiner

Primary Examiner — Ha Tran T Nguyen
Assistant Examiner — Kevin Quinto
(74) *Attorney, Agent, or Firm* — Moazzam & Associates, LLC

(57) **ABSTRACT**

Multiple individual wireless earbuds provide audio from a common audio source. A user may thereby enjoy audio in both ears while also benefiting from an entirely wireless configuration. The individual wireless earbuds may each receive the audio signal from the common audio source and then produce audio accordingly. Each earbud may have a channel setting to define whether a given earbud will produce left channel or right channel audio for a multi-channel audio signal. The individual wireless earbuds may alternatively have a master-slave configuration where a master earbud receives a wireless audio signal from the common source, plays audio based on the audio signal, and transmits a wireless signal based on the wireless audio signal to the slave earbud. The slave earbud then plays audio based on the wireless signal from the master earbud.

20 Claims, 5 Drawing Sheets

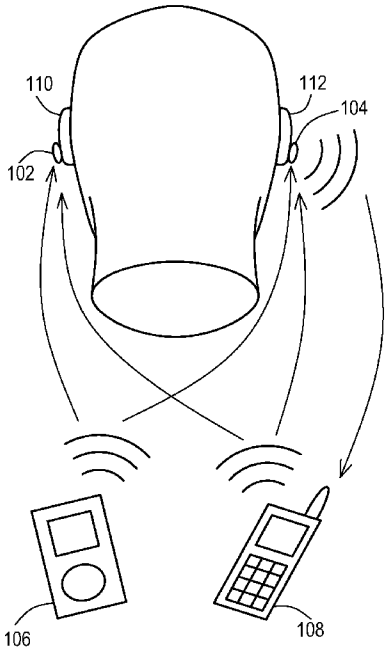

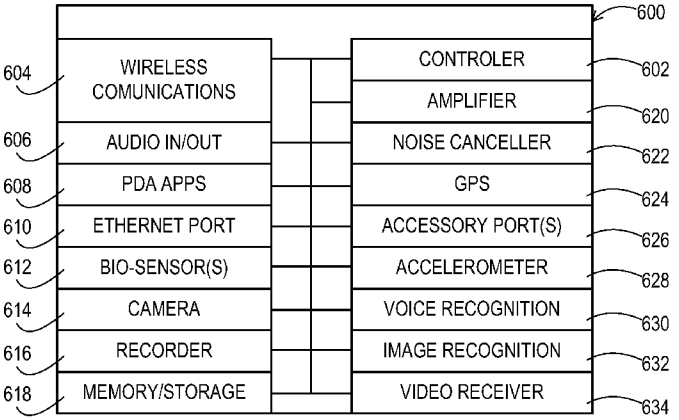

Samsung et. al. v. Techiya
IPR2024-00559
Exhibit 1018

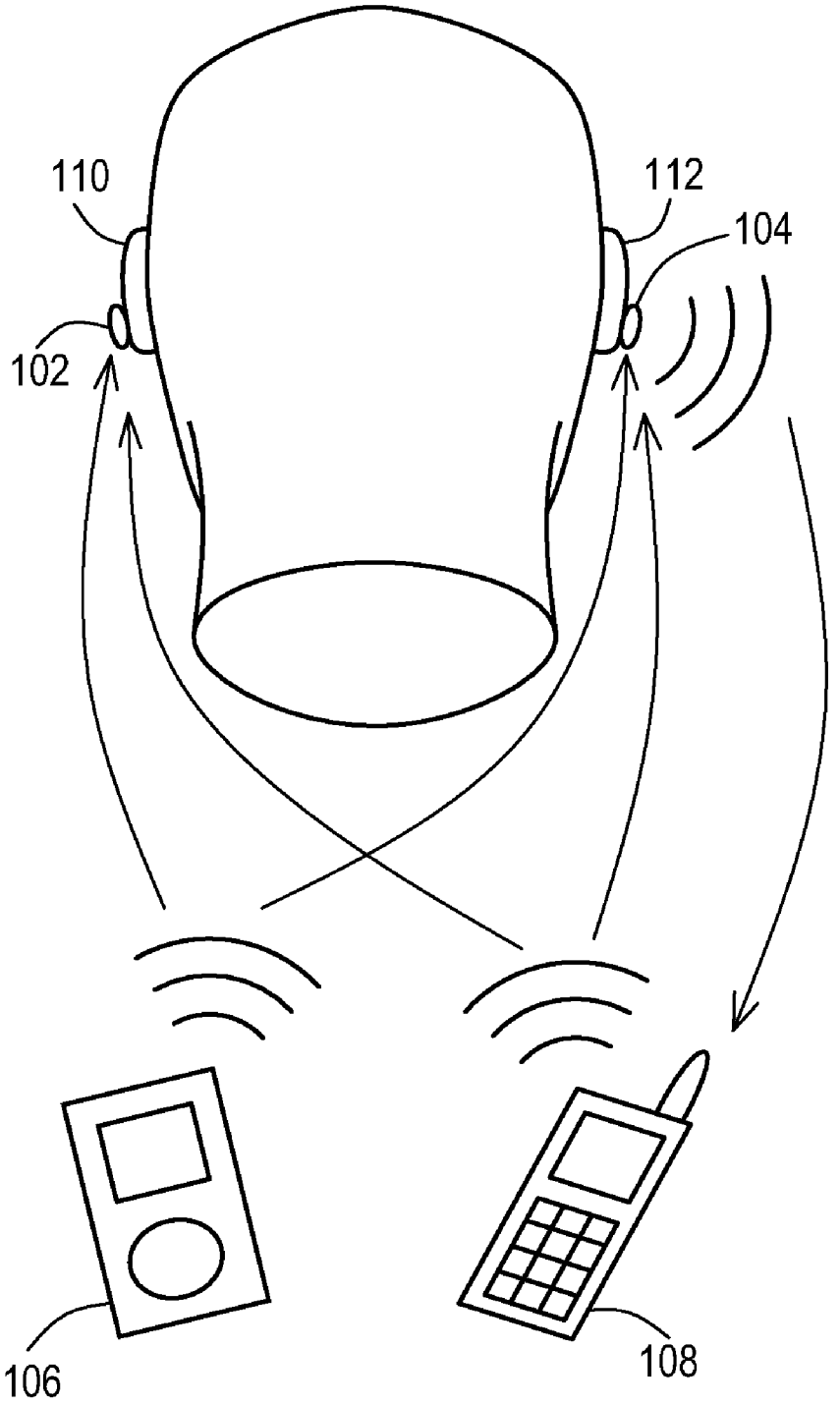

FIG. 1

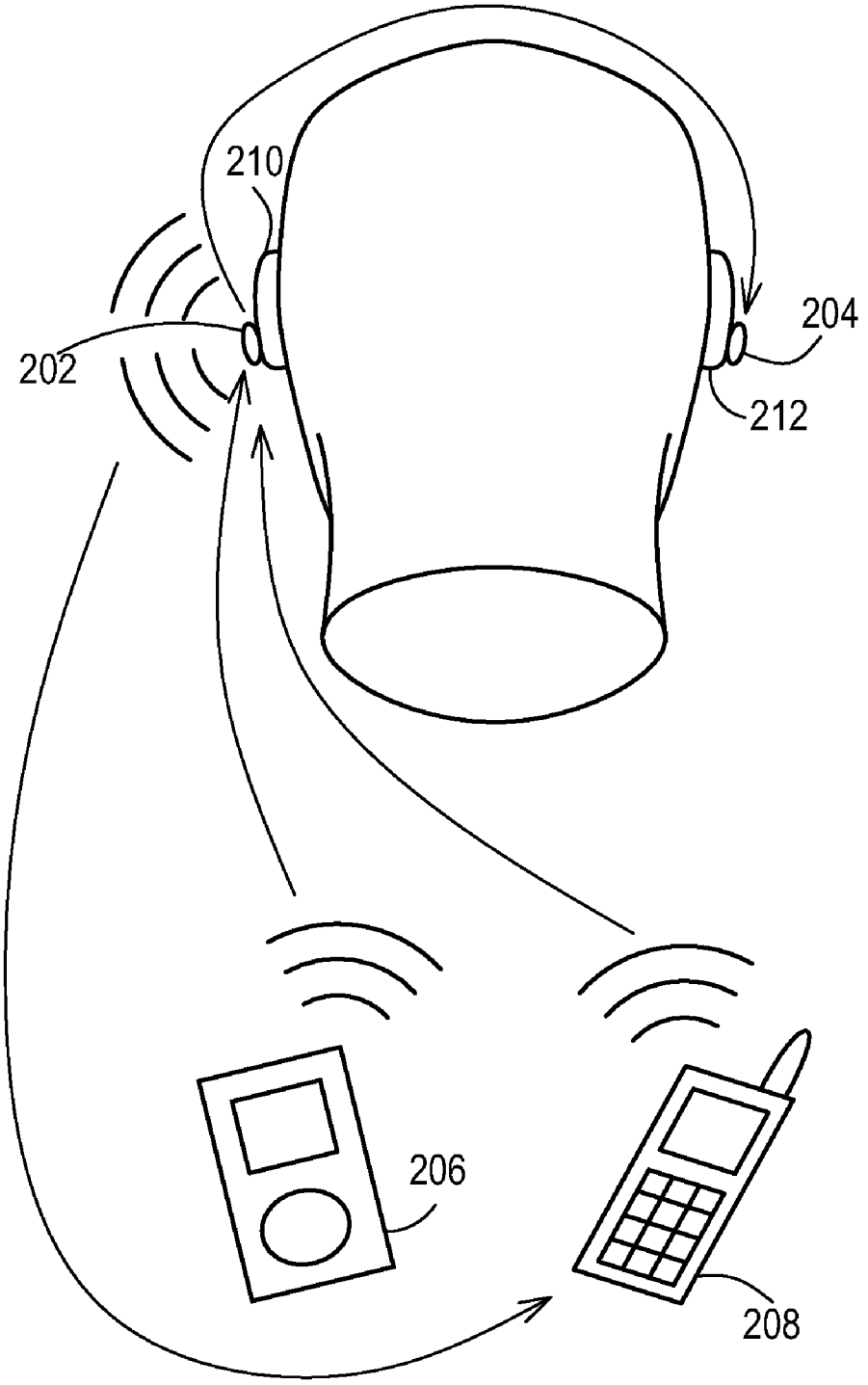

FIG. 2

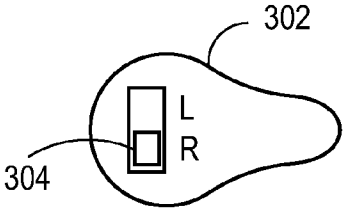

FIG. 3A

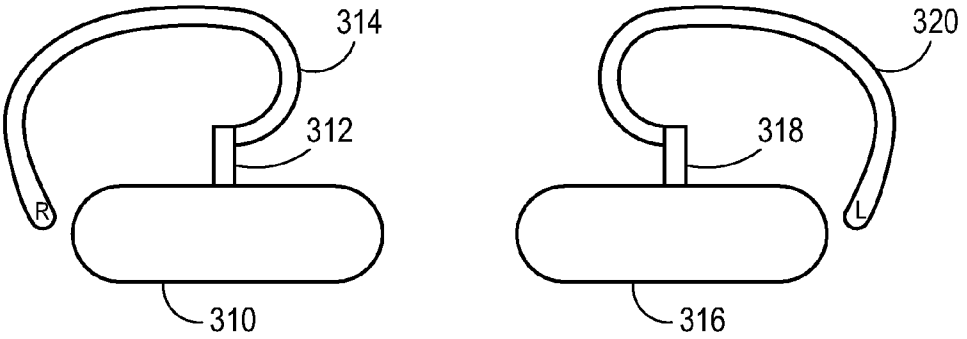

FIG. 3B

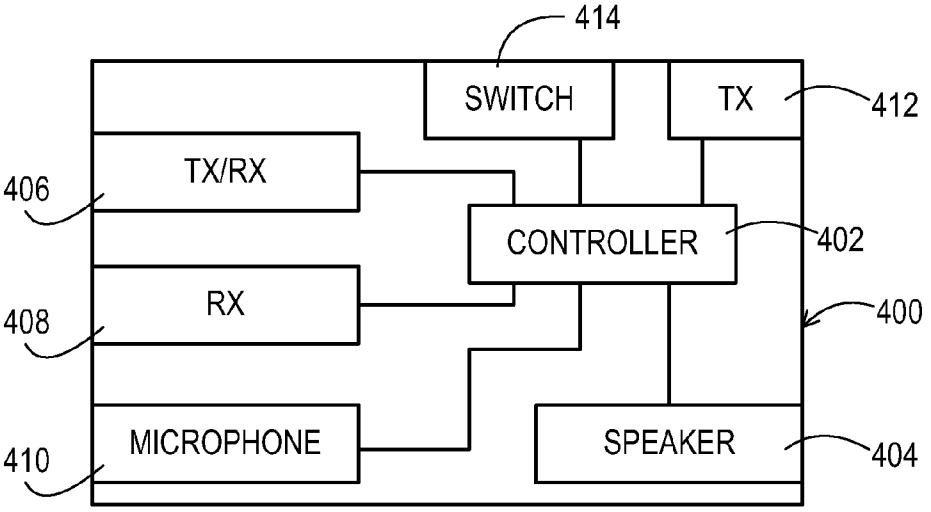

FIG. 4

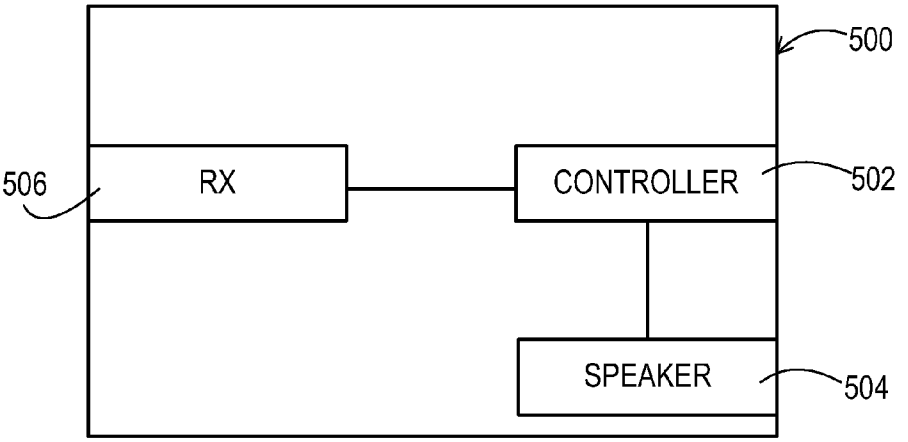
500
506
RX
CONTROLLER
502
SPEAKER
504

FIG. 5

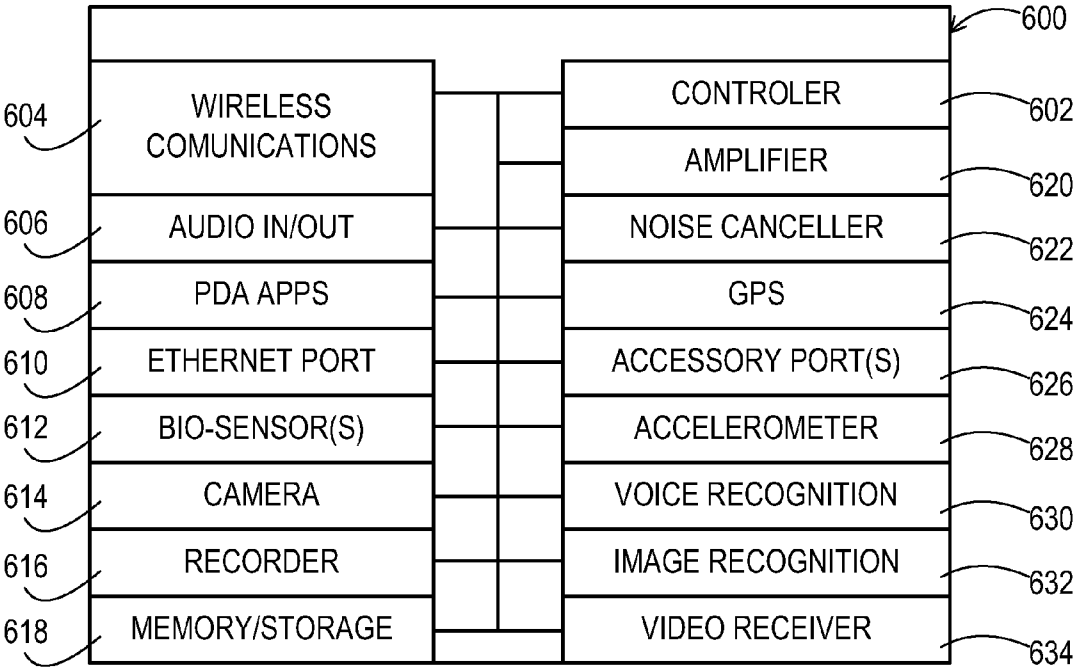
600
604
WIRELESS COMUNICATIONS
606
AUDIO IN/OUT
608
PDA APPS
610
ETHERNET PORT
612
BIO-SENSOR(S)
614
CAMERA
616
RECORDER
618
MEMORY/STORAGE
CONTROLER
602
AMPLIFIER
620
NOISE CANCELLER
622
GPS
624
ACCESSORY PORT(S)
626
ACCELEROMETER
628
VOICE RECOGNITION
630
IMAGE RECOGNITION
632
VIDEO RECEIVER
634

FIG. 6

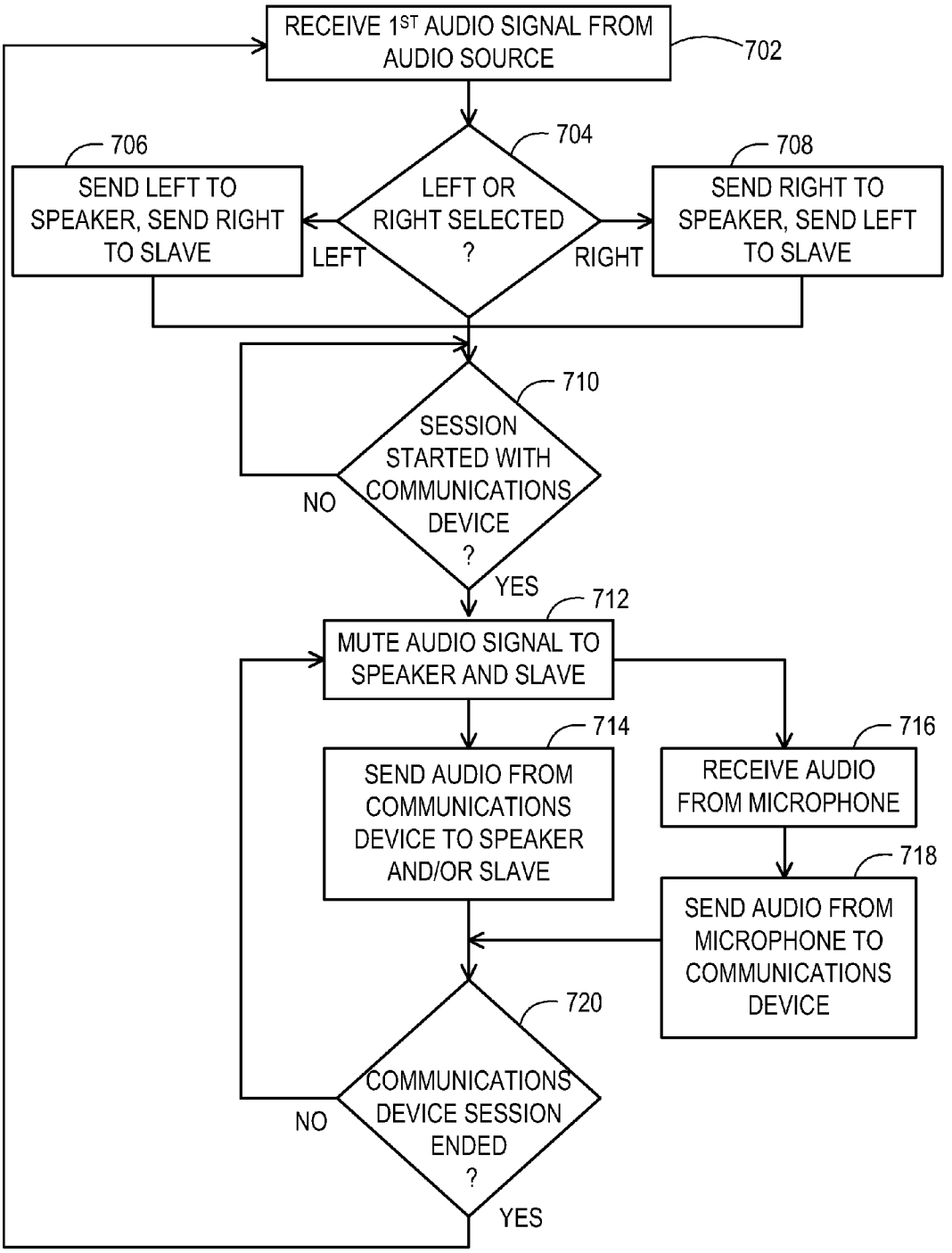
RECEIVE 1ST AUDIO SIGNAL FROM AUDIO SOURCE
702
704
LEFT OR RIGHT SELECTED ?
LEFT
RIGHT
706
SEND LEFT TO SPEAKER, SEND RIGHT TO SLAVE
708
SEND RIGHT TO SPEAKER, SEND LEFT TO SLAVE
710
SESSION STARTED WITH COMMUNICATIONS DEVICE ?
NO
YES
712
MUTE AUDIO SIGNAL TO SPEAKER AND SLAVE
714
SEND AUDIO FROM COMMUNICATIONS DEVICE TO SPEAKER AND/OR SLAVE
716
RECEIVE AUDIO FROM MICROPHONE
718
SEND AUDIO FROM MICROPHONE TO COMMUNICATIONS DEVICE
720
COMMUNICATIONS DEVICE SESSION ENDED ?
NO
YES

FIG. 7

SYSTEMS AND METHODS EMPLOYING MULTIPLE INDIVIDUAL WIRELESS EARBUDS FOR A COMMON AUDIO SOURCE

BACKGROUND

Embodiments relate to wireless earbuds. More particularly, embodiments relate to utilizing multiple individual wireless earbuds to produce audio from one or more common audio sources.

Users of audio sources, such as personal audio and communications devices, typically use some form of a headset or earbud in order to maintain privacy and/or to avoid annoying bystanders. Initially, earbuds and headsets required a wired connection to the audio source. However, earbuds and headsets have advanced so that the ultimate connection to the audio source may be wireless. Users often prefer a wireless earbud because there is little structure to wear, and, in some cases, the earbud may be nearly unnoticeable while being worn.

While wireless earbuds are becoming commonplace as users desire handsfree operation and no clutter from wires, there are drawbacks. For example, users are restricted to a single wireless earbud, and hence sound only in one ear, if all wires are to be avoided. If users want audio from a common source in both ears, then the user must sacrifice some of the benefits of being entirely wireless since stereo earbuds are linked by a wired connection to a common controller box that maintains the wireless connection to the audio source.

SUMMARY

Embodiments address issues such as these and others by providing multiple individual wireless earbuds that may provide audio from a common audio source. Thus, each earbud may have only a wireless connection so that the user may experience audio in each ear while having an entirely wireless configuration between the multiple earbuds and the common audio source.

Embodiments provide an earbud system that includes a first earbud which includes a first speaker and a first wireless receiver that is in wireless communication with an audio source. The first wireless receiver receives an audio signal from the audio source, and the received audio signal is provided to the first speaker to produce sound from the first earbud. A second earbud includes a second speaker and a second wireless receiver that is in wireless communication with the audio source concurrently with the first wireless receiver. The second wireless receiver receives the audio signal from the audio source, and the received audio signal is provided to the second speaker to produce sound from the second earbud.

Embodiments provide an earbud system that includes a first earbud that receives a first wireless audio signal from an audio source, that transmits a second wireless audio signal, and that outputs audio corresponding to the first audio signal via a first speaker. A second earbud is included and receives the second wireless audio signal from the first earbud and outputs audio corresponding to the second audio signal via a second speaker.

Embodiments provide an earbud that includes a housing that fits onto an ear. The earbud further includes a wireless receiver that receives a first wireless signal from an audio source and a speaker that plays audio based on the first wireless signal. The earbud also includes a wireless transmitter that sends a second wireless signal to a second device different than the audio source.

Other systems, methods, and/or computer program products according to embodiments will be or become apparent to one with skill in the art upon review of the following drawings and detailed description. It is intended that all such additional systems, methods, and/or computer program products be included within this description, be within the scope of the present invention, and be protected by the accompanying claims.

DESCRIPTION OF THE DRAWINGS

FIG. **1** shows one example of an earbud system utilizing multiple individual wireless earbuds with a common audio source according to various embodiments.

FIG. **2** shows another example of an earbud system utilizing multiple individual wireless earbuds with a common audio source according to various embodiments.

FIG. **3**A shows an example of an individual wireless earbud with an audio channel switch according to various embodiments.

FIG. **3**B shows an example of a pair of individual wireless earbuds with ear hanger switches according to various embodiments.

FIG. **4** shows an example of components of a master wireless earbud of an earbud system according to various embodiments.

FIG. **5** shows an example of components of a slave wireless earbud of an earbud system according to various embodiments.

FIG. **6** shows an example of additional components of a wireless earbud according to various embodiments.

FIG. **7** shows an example of logical operations that may be performed by a master wireless earbud according to various embodiments.

DETAILED DESCRIPTION

Embodiments provide for a system of earbuds where each individual earbud is wireless, and each earbud plays audio concurrently with the other based on an audio signal from a common audio source. Accordingly, users can enjoy audio from the common audio source in both ears while avoiding the clutter of wires from the earbuds.

FIG. **1** shows one example of an earbud system. In this example, a first wireless earbud **102** is being worn on an ear **110**, while a second wireless earbud **104** is being worn on an ear **112**. Also in this example, both wireless earbuds **102**, **104** receive a wireless audio signal from an audio source such as a personal digital music player **106** and/or a mobile communications device **108**. While the wireless earbuds **102**, **104** or shown being worn on or in the ear, it will be appreciated that embodiments of the wireless earbuds **102**, **104** may also be worn in proximity to the ear **110**, **112** rather than directly on or in the ear **110**, **112**, such as where the sound is projected into a nearby ear **110**, **112** or sound is communicated through surrounding bone to the ear **110**,**112**.

Both wireless earbuds **102**, **104** may receive the audio signal in one of various ways. For example, the audio source **106**, **108** may be configured to broadcast the audio signal to any compatible wireless device that is in range. The broadcast may be digital such that other nearby devices may easily reject the broadcast while the earbuds **102**, **104** may consume the broadcast.

As another example, the audio source **106**, **108** may maintain a communication session, such as via a Bluetooth® Advanced Audio Distribution Profile (A2DP) or similar wireless digital protocol with at least one of the earbuds **102**, **104**.

Where the audio source **106**, **108** is capable of maintaining two concurrent sessions, then each earbud **102**, **104** has its own session with the audio source **106**, **108**. The audio source **106**, **108** may be configured to send a first audio channel or group of audio channels via one of the communication sessions while being configured to send a second audio channel or group of audio channels via the other communication session. Thus, for multi-channel audio, each earbud **102**, **104** may receive a different channel to provide multi-channel audio for the user. Alternatively, the audio source may send all channels to each earbud **102**, **104**, and the earbuds **102**, **104** may discern which audio channels should be played back.

As another example, the audio sources **106**, **108** may maintain only a single communication session, such as via the Bluetooth® protocol with one earbud **102**. However, the second earbud **104** may be configured to eavesdrop on the communication session established for the earbud **102**, such that both earbuds **102**, **104** get the audio signal from the audio source **106**, **108**.

For instances where both earbuds **102**, **104** get all channels of a multi-channel audio signal from the audio source **106**, **108**, then the earbuds **102**, **104** may either play a combined audio signal or may play pre-designated channels. As discussed below, either or both of the earbuds **102**, **104** may include switches to allow a user to manually set which channels of a multi-channel audio signal each earbud **102**, **104** will play.

According to one or more illustrative embodiments, in addition to the earbuds **102**, **104** receiving audio signals, at least one earbud **104** also sends an audio signal. In the example shown, the earbud **104** sends an audio signal to the communications device **108**. The earbud **104** may include a microphone so that the user may have a telephone conversation. The earbud **104** sends an audio signal that includes the audio obtained by the microphone and the communications device **108** then receives that audio signal and sends it out to the other caller.

FIG. **2** shows another example of an earbud system. In this example, a first wireless earbud **202** is being worn in, on, or in proximity to an ear **210** while a second wireless earbud **204** is being worn in, on, or in proximity to an ear **212**. Also in this example, only the first wireless earbud **202** receives a wireless audio signal directly from an audio source such as a personal digital music player **206** and/or a mobile communications device **208**. This audio signal may be of various types, such as a Bluetooth® protocol digital signal or an analog broadcast.

The second wireless earbud **204** receives an audio signal that is sent by the first wireless earbud **202**. Thus, the first wireless earbud **202** acts as a master, while the second wireless earbud **204** acts as a slave. This audio signal that is sent by the first wireless earbud **202** may be of the same type and protocol as the original audio signal from the audio source **206**, **208** or may be an entirely different type and/or format. For example, the audio signal from the audio source **206**, **208** may be a digital signal of a first protocol, while the audio signal from the first earbud **202** to the second earbud **204** may be an analog signal or a digital signal of a different protocol.

In this example, the content of the audio signal sent from the first earbud **202** may be a duplicate of the content of the audio signal received from the audio source **206**, **208**. Thus, the first earbud **202** may act to extract the content from the incoming audio signal and then re-package the extracted audio into an audio signal being sent out to the second earbud **204**. In that case, both earbuds **202**, **204** may play the same audio, such as a combination of all channels for a multi-channel audio signal.

As an alternative to the first earbud **202** duplicating the audio content, the first earbud **202** may instead separate the audio content into its multiple channels, if multi-channel, and then send out a signal that includes those channels that should be played by the second earbud **204**. The channels for the first earbud **202** to play versus the channels for the first earbud **202** to send out to the second earbud **204** may be pre-designated. As discussed above, the first earbud **202** may include a selection so that the user can set which channels the first earbud **202** should play and which should be sent to the second earbud **204**.

According to one or more illustrative embodiments, in addition to the earbuds **202**, **204** receiving audio signals, at least one earbud **202** also sends an audio signal. In the example shown, the earbud **202** sends an audio signal to the communications device **208**. As with the previous example of FIG. **1**, the earbud **202** may include a microphone so that the user may have a telephone conversation. The earbud **202** sends an audio signal that includes the audio obtained by the microphone and the communications device **208** then receives that audio signal and sends it out to the other caller.

It will be appreciated that the second earbud **204** could include the microphone and transmitter instead of the first earbud **202**. However, by including the microphone and transmitter at the first earbud **202**, the first earbud **202** may detect that the audio from an audio source **206** or no-call related audio from a communications device **208** should be stopped while a call is in progress and may stop sending audio to the second earbud **204** during that period.

FIG. **3**A shows one example of an earbud **302**. This earbud **302** has a form factor similar to a hearing aid, where the earbud **302** may rest partially within the ear canal. Either or both earbuds of a pair may have this form factor. In this example, the earbud **302** includes a switch **304** that can be user manipulated between a first and a second position.

The first position of the switch **304** corresponds to one channel or grouping of channels of audio. For example, this first position may correspond to the left (L) channel of stereo audio. The second position corresponds to another channel or grouping of channels of audio, for example, the right (R) channel of stereo audio.

FIG. **3**B shows another example of earbuds. These earbuds have a form factor that allows a main body **310**, **316** to reside externally but adjacent to the ear of the user. To secure these earbuds in place, an ear hanger **314**, **320** is provided to rest on the ear so that the main body **310**, **316** is suspended from the ear and is positioned near the ear canal.

The ear hangers **314**, **320** are attached to the main bodies **310**, **316** by support shafts **312**, **318**, respectively. According to some illustrative embodiments, the ear hangers **314**, **320** may pivot about the support shaft **312**, **318** so that a single main body **310**, **316** may be used for either a left ear or a right ear. The pivoting of the ear hanger **314**, **320** about the support shaft **312**, **318** may further serve to manipulate a switch that controls which channels of audio the earbud will play.

In the examples shown, the ear hanger **314** is positioned to fit onto a right ear. Thus, the switch of the earbud is set to allow playback of channels of audio intended for the right ear, such as the right channel of stereo audio. In this example, the ear hanger **314** has an R facing outward to signify to the user that the ear hanger is set for the right ear and that the audio playback will be for the right ear. The ear hanger **320** is positioned to fit onto a left ear. Thus, the switch of the earbud is set to allow playback of channels of audio intended for the left ear, such as the left channel of stereo audio and the ear hanger **320** has an outward facing L to signify this to the user.

FIG. **4** shows an example of components of an earbud **400** according to various embodiments. This earbud **400** may correspond to either of the form factors discussed above in relation to FIGS. **3**A and **3**B as well as other form factors. The earbud **400** includes a controller **402** that performs logical operations to receive audio signals, transmit audio signals, and provide audio playback to the user. The controller may be of various forms such as a general purpose programmable processor, an application specific processor, hard wired digital logic, and various combinations thereof.

The controller **402**, where it may store programming or digital logic to be self-executed, is an example of a computer readable medium which store instructions that when performed implement various logical operations. Such computer readable media may include various storage media including electronic, magnetic, and optical storage. Computer readable media may also include communications media, such as wired and wireless connections used to transfer the instructions or send and receive other data messages.

The controller **402** communicates with various other components. The controller **402** may communicate with a wireless receiver **408** that may receive audio from an external device that sends information such as an audio signal to the earbud **400**. For example, a digital audio player may broadcast an audio signal or otherwise send an audio signal without requiring a handshake communication session such that the earbud **400** is not required to transmit a confirmation back to the audio source. In that case, the receiver **408** may be the only component directly communicating with the audio source.

According to illustrative embodiments, another component that may be present is a wireless transceiver **406**. This transceiver **406** may be used to wirelessly communicate bi-directionally with an external device such as an audio source. For example, the audio source may utilize a digital protocol such as the Bluetooth® protocol and may require a handshake and/or acknowledgement of communication attempts in order to provide the audio signal. In that case, the transceiver **406** may receive data packets from and also send return data packets to the audio source. As another example, the transceiver **406** may be employed where return audio is to be provided from the earbud **400**, such as when communicating with an audio recorder or with a telecommunications device.

The controller **402** may obtain audio to send via the transceiver **406** by a microphone **410**. This microphone **410** receives the spoken audio from the user. This microphone **410** may be of various types, such as a first type to have a narrow reception cone to attempt to receive only spoken audio from the user or a second type to have a broad reception cone to attempt to also receive background audio.

The controller **402** provides audio playback to the user by channeling audio signals received via the receiver **408** or transceiver **406** to a speaker system **404**. The speaker system **404** includes a transducer and any necessary amplification to produce audio at levels adequate for the user to hear when the earbud **400** is mounted on the ear of the user.

The controller **402** may also be in communication with a switch **414**. This switch **414** may be manipulated to control which channels of multi-channel audio this earbud **400** will play through the speaker system **404**. As discussed above, this switch **414** may be of various forms such as a slidable switch **304** shown in FIG. **3**A or a pivoting shaft **312**, **318** as shown in FIG. **3**B.

For embodiments where the earbud **400** is a master that provides the audio signals to a slave earbud, either a transmitter such as that of the transceiver **406** or a dedicated transmitter **412** may be included. The controller **402** may provide the audio signal to be received by the slave earbud to the transmitter **412** which then transmits a wireless signal that is received by the slave earbud. As discussed above, this wireless signal to the slave earbud may be of various forms, such as an analog signal or a digital signal corresponding to a particular protocol.

The controller **402** may employ signal processing to the received audio signal to separate the audio signal into the various channels it may include. The controller **402** may then send the appropriate channels of the audio signal to the appropriate components. For example, if the earbud **400** is set to play all received channels, then all channels are provided to the speaker system **402**. If the earbud **400** is set to play the right channel, then the controller **402** may provide the right channel to the speaker system **404** while providing the left channel to the transmitter **412** for sending to the slave earbud for playback of the left channel.

FIG. **5** shows examples of components of an earbud **500** that may be a slave earbud that receives audio signals to be played back from a master earbud, such as earbud **400**. Furthermore, the earbud **500** may represent an example that is used to receive a communication directly from an audio source, such as where the audio source broadcasts the audio signal to all listening earbuds **500** or as an example where the audio source is capable of maintaining multiple communication sessions with multiple earbuds **500**.

The earbud **500** includes a controller **502**. This controller **502** communicates with a wireless receiver **506** to receive incoming audio signals. The receiver **506** may be an analog receiver, a digital receiver, or both. The controller **502** obtains the audio signal from the receiver **506** and then provides it to a speaker system **504** that includes a transducer and any amplification needed to produce audio playback at a volume level adequate for a user having the earbud **500** in close proximity to an ear.

FIG. **6** shows examples of components of an earbud **600** that includes a variety of enhanced functions beyond audio playback. To provide for the audio playback and bi-directional audio as discussed above, this earbud **600** includes a controller **602** as well as wireless communications components **604** such as one or more sets of transmitters and receivers to communicate with external audio sources and/or other earbuds. Furthermore, this earbud **600** may include audio input/output components **606** including one or more speakers and one or more microphones.

This earbud **600** may include many other components. For example, a hearing aid amplifier **620** may be present to amplify the sound received through a microphone of the input/output components **606** that is configured to pick up the background rather than the speech of the user. This amplified sound is then played back to the user through a speaker of the input/output components **606** so that the user can hear the background better than if the earbud **600** was not in place.

The earbud **600** may employ a noise canceller module **622** in order to cancel unwanted noise from a signal to be played back or form a signal to be sent out to another earbud or an external audio device. For example, the noise canceller module **622** may cancel noise from the background sounds to be amplified by the hearing aid amplifier **620**. As another example, the noise canceller module **622** may cancel noise from the background sounds to be sent to a telecommunications device. As another example, the noise canceller module **622** may cancel noise received in the audio signal incoming from the external audio source, such as noise acquired during the wireless signal transfer.

The earbud **600** may include a geonavigational positioning system (GPS) module **624**. The GPS module **624** may keep track of a current geographical location of the earbud **600** and

may share that geographical location for use by other on-board components and/or to report to external devices through wireless transmission.

The earbud **600** may include one or more accessory ports **626** that allow for connection to a display device, a keyboard, and the like. Thus, a user may attach such devices and interact with the controller **602** and any applications and modules of the earbud **600** to configure it for use, upload new programming or settings, and download captured data.

The earbud **600** may include an accelerometer **628** that may produce signals in response to movement of the earbud **600**. These signals may then be used to produce data that can be stored and reviewed to analyze motion of the earbud **600**, and hence motion of the user wearing the earbud **600**. For example, this motion data may be used to analyze a medical condition of the user, to measure physical activity of the user, and so on.

The earbud **600** may include a voice recognition module **630**. Thus, the user may speak commands or data and the earbud **600** may then recognize the spoken commands or data and respond accordingly. For example, the controller **602** may perform functions in response to a command to perform the functions being output by the voice recognition module. For instance, the volume of the playback may be increased or decreased in response to the user verbally requesting such a change in the volume.

The earbud **600** may include an image recognition module **632**. The earbud **600** may also include a camera **614**. Thus, upon recording images by the camera **614**, the image recognition module **632** may recognize objects or other aspects from the image. For example, the image recognition module **632** may recognize objects signifying a current environment in which a particular volume level should be used for the audio playback.

The earbud **600** may include a video receiver **634** that may receive wireless video signals. The earbud **600** may have video capability such that video can be sent and received through wireless connectivity, e.g., Bluetooth® protocol, or a temporary wired connection. Thus, an auxiliary display device may provide video playback of video stored by the earbud **600**. Alternatively, the earbud **600** may include a display device as an additional attachment and that may be positioned in front of an eye of the user to view the video playback, such as a wired projection display.

The earbud **600** may include various applications **608** such as those typically found in a personal digital assistant (PDA). For example, the earbud **600** may maintain a calendar of events, may track the current date and time, and may provide audible alarms when the time for occurrence of an event has been reached. As another example, the applications **608** may store to-do lists and the like on behalf of the user and may receive input produced by the voice recognition module **630** in response to the user verbally stating information about tasks to be tracked by the earbud **600**. A wireless keyboard that may wirelessly connect to the earbud **600** is an alternative manner of entering such textual information.

The earbud **600** may include networking ports such as an Ethernet port **610**. Such networking ports may allow the earbud **600** to be accessed via a network or to upload acquired data to the network.

The earbud **600** may include or maintain wireless connectivity to biometric sensors **612** such as temperature sensors, blood pressure monitors, heart rate monitors, blood sugar monitors, and/or other blood monitors. In this manner, the earbud **600** may be utilized to collect such biometric data over time for later downloading and review by the user and/or a physician.

The earbud **600** may also include a recorder module **616**. This recorder module **616** may record to a memory **618** any information received, generated, or otherwise acquired by the earbud **600**. For example, audio signals that are being sent to the earbud **600** may be recorded for subsequent playback. Likewise, photographs from the camera **614** may be recorded to the memory **618**. Accelerometer data, GPS data, biometric data, and the like may be stored to the memory **618**. Furthermore, such information may be stored with a time stamp so that the information may be correlated with respect to time to provide for various analyses of user health or behavior.

FIG. **7** shows one example of a set of logical operations to be performed by a controller **402** of an earbud **400** for purposes of receiving incoming audio signals, providing for bi-directional communications during a telephone call, and managing a slave earbud **500**. At a signal operation **702**, the controller **402** receives a first audio signal from an audio source **106**. The controller **402** then determines whether the left channel or right channel is selected for this earbud **400** at a query operation **704**. Where the left channel is selected, the controller **402** then sends the left channel of the audio signal to the speaker **404** and sends the right channel of the audio signal to the slave earbud **500** at an audio operation **706**. Where the right channel is selected, the controller **402** then sends the right channel of the audio signal to the speaker **404** and sends the left channel of the audio signal to the slave earbud **500** at an audio operation **708**. While as shown one channel or the other is to be selected, it will be appreciated that a mono selection may also be made available so that both earbuds **400** and **500** play the same mono audio.

The controller **402** monitors for a communication session with a communications device **108**, such as a mobile telephone, that takes priority over listening to the audio source **106** at a query operation **710**. Once such a communication session is started, the controller **402** then mutes the audio signal to the speaker **404** and to the slave earbud **500** at mute operation **712**. The controller **402** then initiates two parallel sets of operations to handle the bi-directional nature of the communication session.

For one of the sets of parallel operations, the controller **402** sends audio from the communications device **108** that is being received as the audio signal to the speaker **404** and/or to the slave earbud **500** at an audio operation **714**. The user may prefer to hear the audio of the communication session in one particular ear or in both ears. The controller **402** may thus send the audio to the speaker **404** and/or to the slave earbud **500** so that the audio reaches the desired ear and/or ears.

For the other set of parallel operations, the controller **402** receives audio from the on-board microphone **410** at an audio operation **716**. The controller **402** then has this acquired audio sent to the communications device **108** of the communications session at a send operation **718**. The controller **402** then detects whether the communications session has ended at a query operation **720**. If not, then the controller **402** maintains the muting of the audio signal from the audio source **106** and maintains the parallel sets of operations to continue the bi-directional communication session. Upon detecting the end to the communications session, the controller **402** then resumes receiving the audio signal from the audio source **106** and sending it as appropriate to the speaker **402** and/or the slave earbud **500**.

Thus, as discussed above, audio may be provided to both ears of a user by providing an individually wireless earbud for each ear. According to various embodiments, each wireless earbud may communicate directly with one or more common audio sources to obtain an audio signal and/or one wireless

earbud may act as a master and provide an audio signal to the other wireless earbud that acts as a slave.

While embodiments have been particularly shown and described, it will be understood by those skilled in the art that various other changes in the form and details may be made therein without departing from the spirit and scope of the invention.

What is claimed is:

1. An earbud system, comprising:

a first earbud that comprises a first speaker and a first wireless receiver that is in wireless communication with an audio source and that receives an audio signal from the audio source, the received audio signal being provided to the first speaker to produce sound from the first earbud; and

a second earbud that comprises a second speaker and a second wireless receiver that is in wireless communication with the audio source concurrently with the first wireless receiver and that receives the audio signal from the audio source, the received audio signal being provided to the second speaker to produce sound from the second earbud,

wherein at least one of the first earbud and second earbud includes a camera for recording an image and an image recognition module for recognizing an object within the image.

2. The earbud system of claim **1**, wherein the audio signal is received by the first wireless receiver and by the second wireless receiver as a digital signal following a first protocol and wherein the first and second wireless receivers are responsive to the first protocol to deliver the audio signal to the first and second speakers.

3. The earbud system of claim **1**, wherein the audio signal includes multiple channels of audio, wherein the first earbud has a channel selection, and wherein the first wireless receiver provides a channel of the audio signal to the first speaker based on the selected channel.

4. The earbud system of claim **3**, wherein the channel selection comprises a switch.

5. The earbud system of claim **4**, wherein the first earbud has an ear hanger that has a pivotal connection and wherein the switch is manipulated by pivoting the ear hanger between a left ear position and a right ear position.

6. The earbud system of claim **1**, wherein at least the first earbud further comprises a transceiver that wirelessly communicates with a mobile communications device, a microphone that produces an electrical signal, and wherein the transceiver provides incoming audio to the first speaker and wherein the microphone provides the electrical signal to the transceiver which sends the electrical signal to the mobile communications device.

7. The earbud system of claim **1**, wherein at least the first earbud further comprises a transceiver that wirelessly communicates with a mobile communications network, a microphone that produces an electrical signal, and wherein the transceiver provides incoming audio to the first speaker and wherein the microphone provides the electrical signal to the transceiver which sends the electrical signal to the mobile communications network.

8. The earbud system of claim **1**, wherein at least the first earbud further comprises at least one of a recorder module in electrical communication with the first receiver for recording audio signals, a noise cancellation circuit in electrical communication with the first receiver, and a video receiver.

9. The earbud system of claim **1**, where at least the first earbud has a transmitter that transmits signals and wherein the signals transmitted by the first earbud are received by the second earbud.

10. The earbud system of claim **9**, wherein the signals instruct the second earbud regarding outputting of the audio signal received from the audio source.

11. The earbud system of claim **10**, wherein the audio signal includes multiple channels of audio and wherein the signals transmitted by the first earbud instruct the second earbud as to which of the multiple audio channels to output via the second speaker.

12. An earbud system, comprising:

a first earbud that receives a first wireless audio signal from an audio source, that transmits a second wireless audio signal, and that outputs audio corresponding to the first audio signal via a first speaker; and

a second earbud that receives the second wireless audio signal from the first earbud and that outputs audio corresponding to the second audio signal via a second speaker,

wherein at least one of the first earbud and second earbud includes a camera for recording an image and an image recognition module for recognizing an object within the image.

13. The earbud system of claim **12**, wherein the second wireless audio signal is a duplicate of the first wireless audio signal.

14. The earbud system of claim **12**, wherein the first wireless audio signal includes multiple channels of audio, wherein the first earbud outputs audio via the first speaker for at least one of the multiple channels of audio, wherein the second wireless audio signal includes a subset of the multiple channels of audio, and wherein the second earbud outputs audio via the second speaker corresponding to at least one channel of audio from the subset.

15. The earbud system of claim **12**, wherein the first earbud has an ear hanger that has a pivotal connection and wherein an audio channel selection is made in response to pivoting the ear hanger between a left ear position and a right ear position.

16. The earbud system of claim **12**, wherein at least the first earbud further comprises a transceiver that wirelessly communicates with a mobile communications device, a microphone that produces an electrical signal, wherein the transceiver provides incoming audio to the first speaker, and wherein the microphone provides the electrical signal to the transceiver which sends the electrical signal to the mobile communications device.

17. An earbud, comprising:

a housing that fits onto an ear;

a wireless receiver that receives a first wireless signal from an audio source;

a speaker that plays audio based on the first wireless signal;

a wireless transmitter that sends a second wireless signal to a second device different than the audio source,

a camera for recording an image; and

an image recognition module for recognizing objects within the image.

18. The earbud of claim **17**, wherein the wireless transmitter sends the second wireless signal to a slave earbud, the second wireless signal being based on the received first wireless signal.

19. The earbud of claim **17**, further comprising a microphone that produces an electrical signal, wherein the wireless transmitter sends a second wireless signal to a communications device, the second wireless signal being based on the electrical signal.

20. The earbud of claim **19**, further comprising a second wireless receiver that receives a third wireless signal from the communications device and wherein the speaker plays audio based on the third wireless signal in place of the audio corresponding to the first wireless signal when receiving the third wireless signal concurrently with the first wireless signal.

* * * * *