US 20060116175A1

(19) United States

(12) Patent Application Publication

(10) Pub. No.: US 2006/0116175 A1

(43) Pub. Date: Jun. 1, 2006

Chu

(54) HANDHELD COMMUNICATIONS DEVICE WITH AUTOMATIC ALERT MODE SELECTION

(75) Inventor: **Steve C. Chu**, San Francisco, CA (US)

Correspondence Address:
BURGESS & BEREZNAK LLP
800 WEST EL CAMINO REAL
SUITE 180
MOUNTAIN VIEW, CA 94040 (US)

(73) Assignee: **Cisco Technology, Inc.**, SanJose, CA

(21) Appl. No.: **10/998,479**

(22) Filed: **Nov. 29, 2004**

Publication Classification

(51) **Int. Cl.**
H04B 1/38 (2006.01)

(52) **U.S. Cl.** **455/567**

(57) **ABSTRACT**

Apparatus for automatically alerting a user of a handheld communications device of an incoming transmission includes a plurality of sensors each of which produces a signal indicative of a physical parameter of a surrounding environment of the handheld communications device. Also included is a processor that executes a programmed set of instructions to determine an optimal alert mode setting based on a combination of the sensor signals. A plurality of output units produces one or more sensory alert outputs In response to the optimal alert mode setting. It is emphasized that this abstract is provided to comply with the rules requiring an abstract that will allow a searcher or other reader to quickly ascertain the subject matter of the technical disclosure. It is submitted with the understanding that it will not be used to interpret or limit the scope or meaning of the claims.

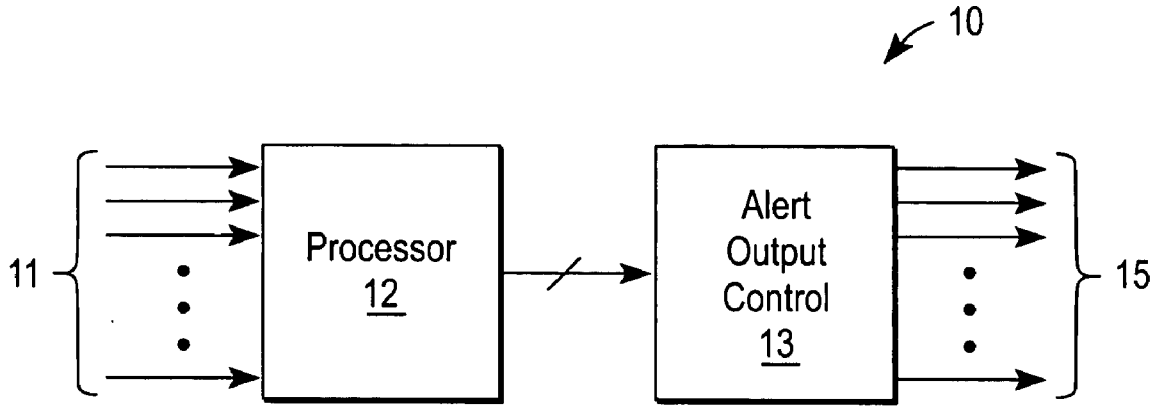

Samsung et. al. v. Techiya
IPR2024-00559
Exhibit 1022

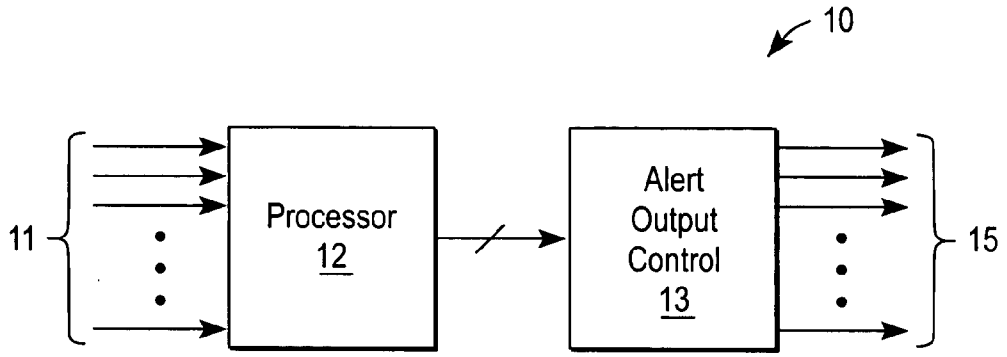
10
11
Processor
12
Alert
Output
Control
13
15

FIG. 1

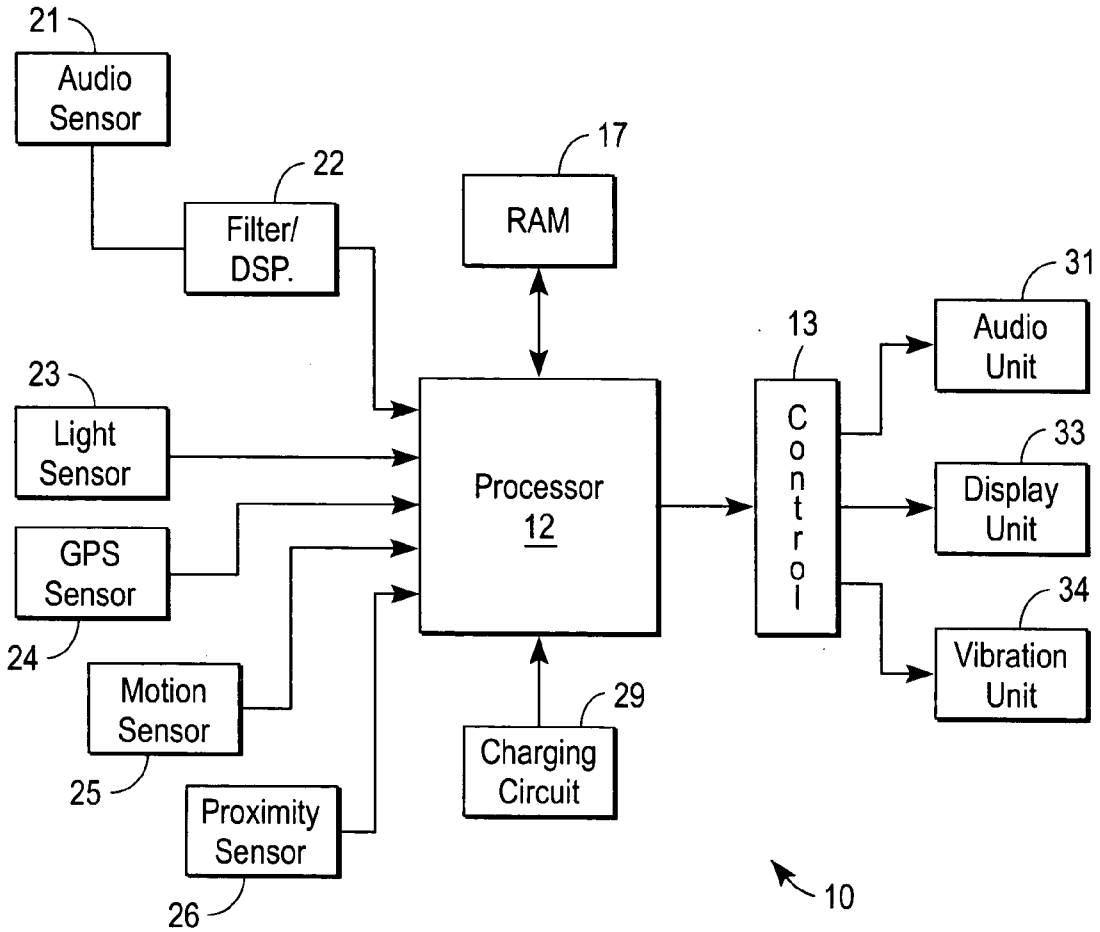
21
Audio
Sensor
22
Filter/
DSP.
17
RAM
31
Audio
Unit
13
Control
23
Light
Sensor
Processor
12
33
Display
Unit
GPS
Sensor
24
34
Vibration
Unit
Motion
Sensor
29
Charging
Circuit
25
Proximity
Sensor
26
10

FIG. 2

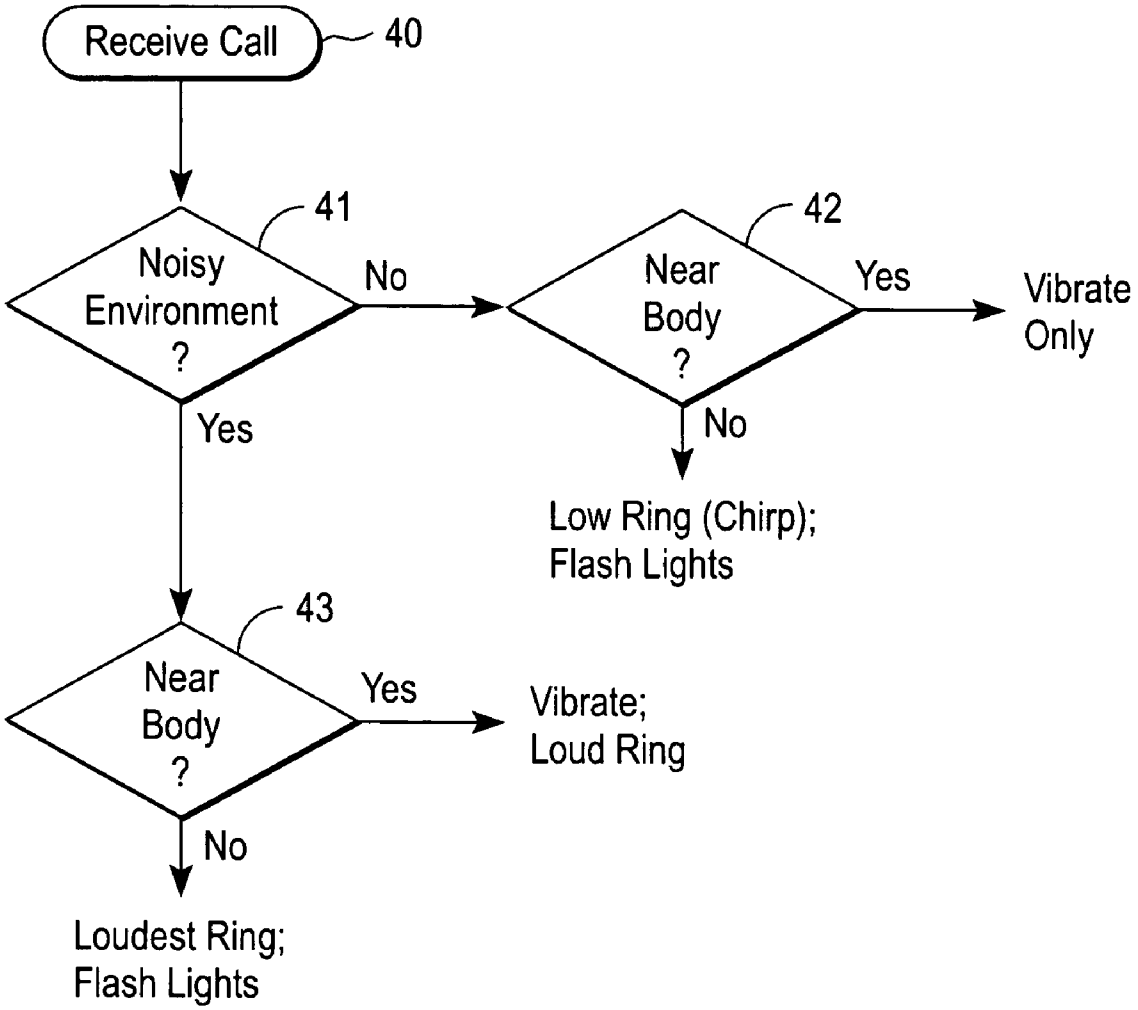
Receive Call
40
41
Noisy Environment ?
No
Yes
42
Near Body ?
Yes
Vibrate Only
No
Low Ring (Chirp); Flash Lights
43
Near Body ?
Yes
Vibrate; Loud Ring
No
Loudest Ring; Flash Lights

FIG. 3

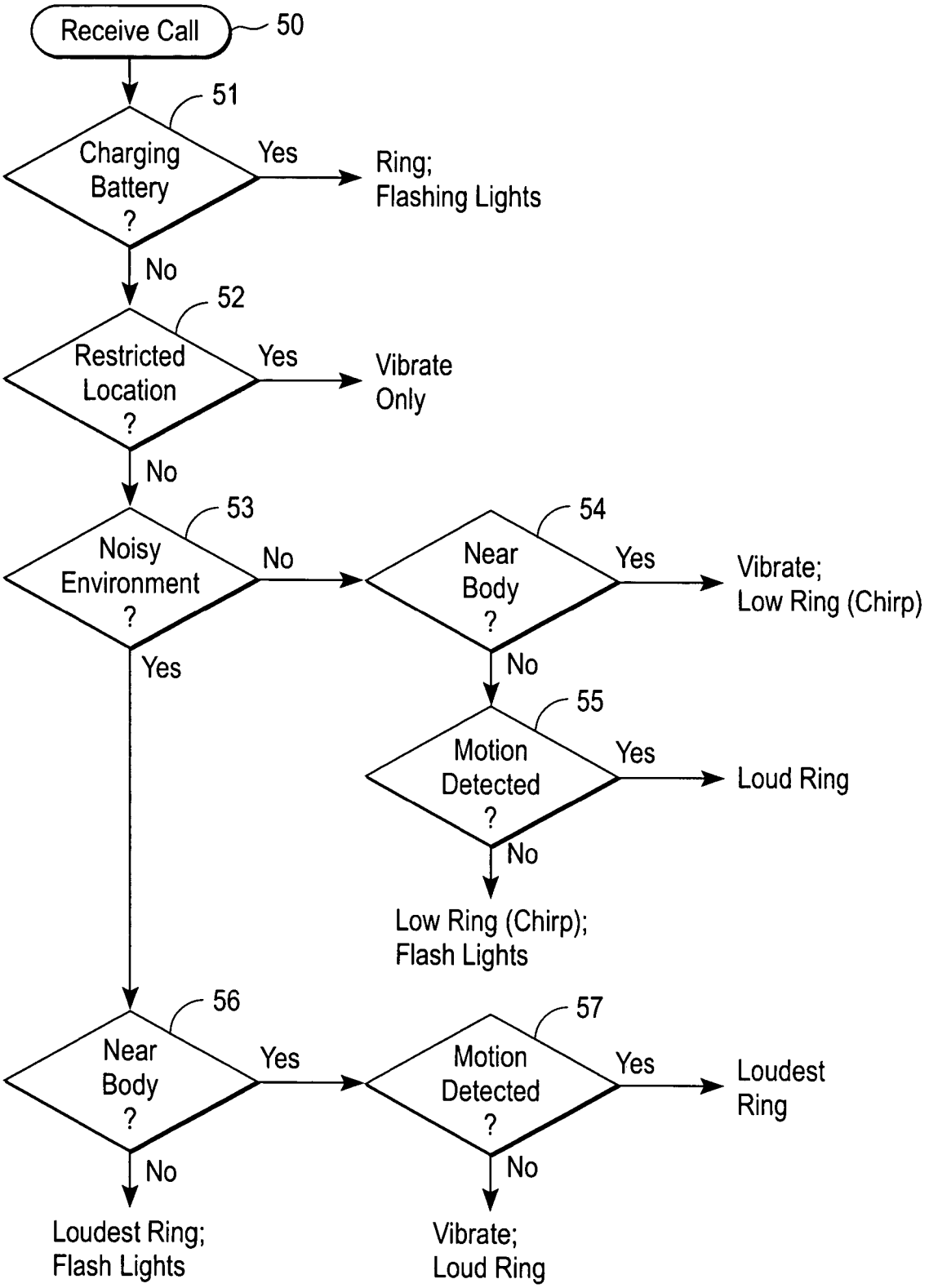
Receive Call
50
51
Charging Battery ?
Yes
Ring; Flashing Lights
No
52
Restricted Location ?
Yes
Vibrate Only
No
53
Noisy Environment ?
No
54
Near Body ?
Yes
Vibrate; Low Ring (Chirp)
No
55
Motion Detected ?
Yes
Loud Ring
No
Low Ring (Chirp); Flash Lights
Yes
56
Near Body ?
Yes
57
Motion Detected ?
Yes
Loudest Ring
No
Loudest Ring; Flash Lights
No
Vibrate; Loud Ring

FIG. 4

HANDHELD COMMUNICATIONS DEVICE WITH AUTOMATIC ALERT MODE SELECTION

FIELD OF THE INVENTION

[0001] The present invention relates generally to the field of digital communication systems and circuits; more specifically, to monitoring and control circuitry for portable (i.e., handheld) communications devices.

BACKGROUND OF THE INVENTION

[0002] The past few decades has produced explosive growth in the consumer markets for handheld communications devices such as mobile ("cell") phones, pagers, two-way pagers, walkie-talkie devices, portable or wireless email devices including personal digital assistants (PDAs), laptop computers, and the like. During operation, these types of devices receive incoming communication transmissions or calls that require the attention of the user. These communication transmissions can be in the form of incoming voice messages, data messages, cellular telephone calls, or other radio transmissions. Examples of message delivery and basic radio communications systems are found in U.S. Pat. Nos. 6,804,334 and 6,421,544.

[0003] Many handheld communications devices are capable of being manually set so as to notify the user of an incoming call or event through either and audible, visual or vibration signal queue. Most wireless cell phones and pagers, for example, permit a user to set the handheld device to operate in one of a variety of alert modes. Commonly available alert modes include different ring tone settings, each with a selectable volume control, and a silent vibration mode. Many cell phones also include a "hands-free" or voice command setting that may be utilized when the user is driving an automobile, operating machinery, or is otherwise unable to manually operate the device.

[0004] One problem that arises, however, is that the user is constantly required to change the appropriate alert mode setting and adjust the volume controls of the handheld device depending on the environment that the user is currently in. By way of example, a person typically must turn their cellular telephones off, or place them in a silent or vibration mode, prior to entering a meeting room, hospital, courtroom, prison, or other similar location where noise disruptions or communications are prohibited. This poses a significant burden for the user, as they must be constantly mindful of their environment—including the appropriateness of their current location for receiving incoming transmissions—and vigilantly program their handheld communications device accordingly.

[0005] Another related drawback of prior art portable communications devices is that they may be inadvertently left in an old setting that is inappropriate for the user's new, current environment. For example, a wireless cell phone user may forget to change the alert mode setting of his telephone before entering a meeting or conference. In such a setting, the loud ring of an incoming call may be annoying and disruptive. On the other hand, a person who manually places their cell phone in a mute or silent setting prior to a meeting, and who forgets to change that setting after leaving the meeting, may miss important incoming calls for failure to be adequately alerted.

[0006] Various technologies have been developed in an attempt to ease the numerous burdens imposed on users of handheld communications devices. For example, U.S. Pat. No. 6,792,296 teaches a system and method of automatically configuring a portable wireless communications device when the device is connected to a hands-free control unit in a vehicle. The wireless communications device obtains information from the vehicle, such as data associated with a power loss for communicating through an external antenna of the vehicle, when it is connected to the control unit. Each of these elementary streams has a Packet Identifier (PID) that uniquely identifies that stream within the larger transport stream.

[0007] Similarly, U.S. Pat. No. 6,799,052 discloses a hand-held cellular telephone system that incorporates a high resolution global positioning system (GPS) circuit into a cell phone unit. A cell base station communications server inhibits transmissions to the cell phone user when it is determined that the cell phone is in a specific restricted area based on GPS location information.

[0008] In another approach, U.S. Pat. No. 6,792,296 teaches a system and method for indicating battery charging information to cell phone users when the cell phone is near an associated battery charger. The charger and cell phone are adapted to establish a communications link with each other when the cell phone is within a predetermined proximity range of the charger. The link allows either the charger or cell phone to analyze the status of the telephone's battery and, when appropriate, warn or remind the user to charge the battery based on the results of the analysis.

[0009] In still another improvement to cellular telephone technology, U.S. Patent Application Publication No. 2004/0131206 discloses a telecommunications device that provides the user with a selectable digital audio equalizer to compensate for frequency-dependent attenuation or ambient noise in the received audio signal. The digital audio equalizer applies an audio frequency profile to the received audio signal, thereby attenuating some frequencies and/or amplifying others. The user selects which audio profile they prefer by manually pressing buttons on the cordless telephone. In this manner the user may select an audio profile which best matches the user's personal hearing spectrum.

[0010] Although these various techniques have helped to alleviate certain specific problems associated with portable communications devices, there still remains an unsatisfied need for a better and more comprehensive solution to the problem of alerting a user of a handheld communications device of incoming transmissions in view of ever changing environments.

BRIEF DESCRIPTION OF THE DRAWINGS

[0011] The present invention will be understood more fully from the detailed description that follows and from the accompanying drawings, which however, should not be taken to limit the invention to the specific embodiments shown, but are for explanation and understanding only.

[0012] **FIG. 1** is a high-level circuit block diagram of the dynamic alert mode control circuitry of the present invention.

[0013] **FIG. 2** is a circuit block diagram illustrating with one embodiment of the present invention.

[0014] **FIG. 3** is a flow chart diagram illustrating an exemplary method of operation according to one embodiment of the present invention.

[0015] **FIG. 4** is a flow chart diagram illustrating a method of operation according to another embodiment of the present invention.

DETAILED DESCRIPTION

[0016] Apparatus and method for automatic alert mode selection in a portable or handheld communications device is described. In the following description, numerous specific details are set forth, such as device types, operating modes, configurations, etc., in order to provide a thorough understanding of the present invention. However, persons having ordinary skill in the networking arts will appreciate that these specific details may not be needed to practice the present invention.

[0017] According to the present invention a handheld communications device is provided that includes an "auto alert mode" setting that automatically switches between different alert modes on a dynamic basis depending on current sampled environmental conditions. With the auto alert mode selection feature, an optimal user alert is automatically selected without user intervention using a computer-implemented algorithm that intelligently analyzes a multitude of input data obtained from environmental sensors. These sensors may include a wide variety of well-known electronic sensors, including: infrared, ultrasonic, decibel-level, light intensity, capacitive/inductive proximity, noise, heat, speech, music, GPS, physical orientation, motion-detection, and wireless network detection sensors.

[0018] It should be understood that in the context of the present invention, the term "handheld communications device" refers broadly to any portable electronic device capable of receiving incoming communications or calls. Examples of handheld communications device include wireless phones, cellular telephones, pagers, two-way pagers, portable GPS receivers, walkie-talkie devices, and wireless email devices such as personal digital assistants (PDAs) and laptop computers, or any other portable communications device.

[0019] **FIG. 1** is a block diagram of the basic architecture of the automatic alert mode selection circuitry for a handheld communications device according to one embodiment of the present invention. The alert mode selection circuitry **10** includes a processor **12** coupled to receive a set of environmental sensor input signals **11** produced by a corresponding set of sensors. Each of the sensor signals **11** provides physical parametric data of the surrounding environment of the handheld communications device. Processor **12** executes an algorithm implemented in the form of a programmed sequence of computer instructions that analyzes the sensor input data and generates an appropriate output response to an alert output control unit **13**. Alert output control unit **13** produces one or more signals **15**, which are coupled to a variety of alert units, in response to the signals generated by processor **12**. These alert units may provide audible, visual, or other physical (i.e., vibration, temperature, etc.) outputs that can be used to alert the user of an incoming or received transmission.

[0020] In certain cases, a temporal sequence of alert output signals may be produced that varies over time. By way of example, a basic sequence may comprise an initial vibration or several vibrations followed by a low volume ring or chirp, followed by a louder ring, flashing lights, or some combination of the above. Detailed examples of different outputs and sequences of outputs appropriate for different environmental conditions and locations will be discussed shortly.

[0021] Practitioners familiar with digital circuitry will understand that in certain embodiments, processor **12** and control unit **13** may be replaced by a single device, such a microcontroller, or by a processor that is coupled to ordinary driver circuitry connected to the alert signal units. In still other embodiments, processor **12** and controller **13** may be substituted with ordinary combinatorial logic implementing a state transition table or diagram. This latter configuration, for example, could be used in conjunction with conventional threshold detection circuitry for determining when an input sensor signal exceeds a predetermined threshold level. State transitions would occur based on the digitized sensor input data, with each state producing a combination of output signals that drive the various output alert units.

[0022] With reference now to **FIG. 2**, there is shown a detailed circuit block diagram of alert mode selection circuitry **10** according to one embodiment of the present invention. As in the case of **FIG. 1**, alert mode selection circuitry **10** includes a processor **12** coupled with a control unit **13**. A random-access memory (RAM) **17** is also shown coupled with processor **12**. RAM **17** may store program instructions for the algorithm or state-transition information used to determine the appropriate alert mode responsive to the sampled environmental inputs. RAM **17** may also be used by processor **12** as a scratch memory for performing calculations, or to store map database information used in conjunction with GPS location information provided by GPS sensor **24**.

[0023] The embodiment of **FIG. 2** illustrates an audio sensor **21** coupled to a filter/digital signal processing (DSP) unit **22** that provides an audio signal input to processor **12**. In certain implementations, unit **22** may also include a digital audio equalizer. One purpose of filter/DSP unit **22** is to process the sampled audio noise levels so that processor **12** may determine both the type (e.g., based on frequency spectrum) and loudness (decibels) of the noise environment surrounding the handheld device. Typically, processor **12** maintains a running sample of the latest noise levels and determines the nature of the surrounding sound (e.g., music, speech, diffused or "white" noise) based on the signals provided by filter/DSP unit **22**. This audio information may be used to adjust the audible alert levels output by audio unit **31**.

[0024] According to the present invention, the audio output volume setting is dynamically adjusted based a sampling of the audio spectrum surrounding the handheld communications device. Wind noises, crowd noises, white noises, etc., are identified by either filter/DSP unit **22** or processor **12** so that the algorithm can intelligently set the alert output volume. For example, in cases where the noise level is increasing in the environment, the alert audio output signal of the handheld device may be increased to a level adequate to alert the user. Conversely, in cases where environmental noise levels are decreasing, the audible alert level may be dynamically lowered. In other words, because a user could be constantly changing operating environments, the volume

setting of audio unit **31** is continually adjusted, i.e., on a dynamic basis, to appropriately adapt to the current environment. In this manner, users are unlikely to miss audible call alerts due to extraneous surrounding noise sources. Likewise, in quiet environments, blaringly loud rings are avoided since the present invention operates to set the ring volume and ring tone frequency (including frequency equalization) so that it can be comfortably heard by the human ear. Other embodiments may include a set of audio profiles that may be selected manually by the user to best match that person's personal hearing spectrum or audio comfort level.

[**0025**] In certain applications identifying the nature of the surrounding sound is important in order to determine the appropriate type of alert mode setting. By way of example, if processor **12** may determine that the audio input represents conversational speech and the proximity sensor **26** detects that the user is in close proximity to the handheld device. This combination may specify a vibrate-only response by vibration output unit **34**. In the event that the user fails to answer the incoming call within a predetermined number of vibration events, the vibration output may be supplanted by a series of low level rings or chirps that gradually increase in volume over time if the user does not answer. The alert mode might also include a flashing light output (including color variations) from display unit **33**, especially in situations where light sensor **23** detects a dark surrounding. In other words, it should be understood that an appropriate alert mode output response may comprise a sequence of outputs from one or more of units **31**, **33**, or **34**.

[**0026**] For user proximity detection, proximity sensor **26** may incorporate ultrasonic, capacitive/inductive, or other well-known sensors for detecting the distance between the handheld device and a human body. In cases where the distance between the user and the device has increased (i.e., the user removes the cell phone from his pocket and places it on a desk) the automatic alert mode algorithm may cause the handheld device to transition from a vibrate mode to an audible or visual alert mode. On the other hand, when a user picks up the phone and puts it in his pocket again, the alert mode apparatus of the present invention might automatically transition from an audible or visual alert mode back to a vibrate mode. Since the alert mode selection occurs automatically, the user is not required to manually change the alert mode setting. That is, an optimal alert mode setting for a particular sensed environmental condition is intelligently selected without inconveniencing the user. Incidences of unwanted ringing and missed alerts are therefore greatly reduced.

[**0027**] The block diagram of **FIG. 2** further includes a conventional motion sensor **25** for detecting movement and orientation of the handheld communications device. In cases where significant movement of the device is detected, for example, processor **12** may select an alert mode that does not include a vibration output from unit **34**. Similarly, if sensor **25** detects that the device is oriented with the display facing downward, the automatic alert mode selection circuitry of the present invention may select a mode that does not include a visual alert output from unit **33**.

[**0028**] Location information provided by GPS sensor **24** may be utilized to either inhibit incoming calls or select an alert mode that is appropriate for certain noise or call restricted locations. By way of example, in the case where processor **12** determines that the user is in a hospital based on GPS location information provided by sensor **24**, an alert mode setting may be automatically selected that does not include any audible output from unit **31**. In more restricted areas, such as prisons, courtrooms, etc., incoming calls may be blocked or diverted to a message answering service. Practitioners in the relevant arts will appreciate that RAM **17** may store map data of restricted or sensitive locations for use by processor **12** in conjunction with the location signals provided by sensor **24**.

[**0029**] The embodiment of **FIG. 2** also includes an optional charging circuit coupled with processor **12** for indicating when the handheld device is connected with a battery charger. Charging information may be used by processor **12** to select an alert mode that disables vibration unit **34** since vibration is generally pointless when the device is being charges.

[**0030**] **FIG. 3** is a flowchart that illustrates a basic method for automatic alert mode selection in accordance with one embodiment of the present invention. The steps shown in **FIG. 3** may comprise a manufacturer-programmed algorithmic code for execution by processor **12**, or, alternatively, a user-programmed alert mode response. The method begins at block **40** wherein an incoming call or transmission is received by the handheld device. At the time the call is received processor **12** determines the noise level of the surrounding environment, which step is shown occurring at decision block **41**. In the case of a quiet environment, the next inquiry is to determine whether the device is near a human body based on input data provided by a proximity sensor (block **42**). If the device is in close proximity to the user a vibrate-only alert mode is selected. On the other hand, if the device in not near the user then a combination or sequence of alert outputs is selected that includes a low volume ring (e.g., a chirp) and a flashing light display.

[**0031**] In the case where a noisy environment is detected (i.e., a transition to block **43**) and the device is near the user, a vibrate alert mode is selected. In the event that the user fails to answer the vibrate alert within a specified time, a loud ring alert may occur. Finally, when a noisy environment is detected and the handheld device is not in close proximity to the user, an alert mode is selected that includes a loudest ring output together with flashing lights.

[**0032**] **FIG. 4** is a flowchart that illustrates another embodiment of a method for automatic alert mode selection in accordance with the present invention. The method begins at block **50** wherein an incoming transmission is received by the handheld device. At decision block **51**, the processor running the automatic alert mode algorithm determines whether the device is currently connected to a battery charger; if it is, an alert mode is selected which includes an audible ring and flashing lights, but no vibration output. In the event that the device is not being charged, the processor correlates the device's present location (based on GPS sensor data) with a database of known restricted areas. If the handheld device is currently in a restricted location, a vibrate-only alert mode is selected.

[**0033**] In the case where the handheld device is not in a restricted location and not being charged, a determination of the noise level of the surrounding environment is made (block **53**). In the case where the device is currently in a quiet environment and near a body (block **54**), a vibrate/low

ring alert mode is selected. In the case where the device is in a quiet environment, not near a body, and motion is detected (block **55**), a loud ring alert mode setting is selected. In the case where no motion is detected, the device is in a quiet environment and not in close proximity to a body, a low ring/flashing light setting is selected.

[**0034**] In the case where the handheld device is not in a restricted location, not being charged, in a noisy environment, and not near a body (block **56**), a loudest ring/flashing light alert mode setting is selected. Where the handheld device is not in a restricted location, not being charged, in a noisy environment, near a body, and movement is detected (block **57**), a loudest ring alert mode setting is selected. Conversely, when there is no movement of the device and not being charged, not in a restricted location, in a noisy environment, and near a body, a vibrate/loud ring setting may be selected.

[**0035**] Practitioners in the communications arts will appreciate that even though the methods shown in the examples of **FIGS. 3 & 4** depict relatively simple threshold level (i.e., yes/no) decision-making processes as applied to sensor data, other embodiments may implement a much more complex algorithm based on analog data provided by a multitude of sensors for input to one or more data processing units. That is, the present invention is not limited to threshold or discrete sensor mechanisms or data levels but may extend broadly to a wide variety of sensor devices and complex data processing algorithms.

[**0036**] It should also be understood that elements of the present invention may also be provided as a computer program product which may include a machine-readable medium having stored thereon instructions which may be used to program a computer (or other electronic device) to perform a process. The machine-readable medium may include, but is not limited to, floppy diskettes, optical disks, CD-ROMs, and magneto-optical disks, ROMs, RAMs, EPROMs, EEPROMs, magnet or optical cards, propagation media or other type of media/machine-readable medium suitable for storing electronic instructions. For example, elements of the present invention may be downloaded as a computer program product, wherein the program may be transferred from a remote computer (e.g., a server) to a handheld by way of data signals embodied in a carrier wave or other propagation medium via a communication link (e.g., a modem or wireless network connection).

[**0037**] Furthermore, although the present invention has been described in conjunction with specific embodiments, those of ordinary skill in the computer networking arts will appreciate that numerous modifications and alterations are well within the scope of the present invention. Accordingly, the specification and drawings are to be regarded in an illustrative rather than a restrictive sense.

1. Apparatus for automatically alerting a user of a handheld communications device of an incoming transmission comprising:

means for producing a plurality of sensor signals each of which corresponds to a physical parameter of a surrounding environment of the handheld communications device;

means for processing the sensor signals in accordance with a programmed selection algorithm and generating a certain alert mode setting based on a combination of the sensor signals; and

means for producing one or more sensory alert outputs in response to the certain alert mode setting.

2. The apparatus of claim 1 wherein the plurality of sensor signals include audio signals.

3. The apparatus of claim 1 wherein the plurality of sensor signals Include light signals.

4. The apparatus of claim 1 wherein the plurality of sensor signals include global position signals.

5. The apparatus of claim 1 wherein the plurality of sensor signals include proximity signals.

6. The apparatus of claim 1 wherein the plurality of sensor signals include motion signals.

7. The apparatus of claim 1 wherein the one or more sensory alert outputs includes an audible output.

8. The apparatus of claim 1 wherein the one or more sensory alert outputs includes a visual display output.

9. The apparatus of claim 1 wherein the one or more sensory alert outputs includes a vibration output.

10. Apparatus for automatically alerting a user of a handheld communications device of an incoming transmission comprising:

a plurality of sensors each of which produces a signal indicative of a physical parameter of a surrounding environment of the handheld communications device;

a processor that executes a programmed set of instructions to determine a certain alert mode setting based on a combination of the sensor signals; and

a plurality of output units that produce one or more sensory alert outputs in response to the certain alert mode setting.

11. The apparatus of claim 10 wherein the one or more sensory alert outputs comprise a temporal sequence of alert outputs.

12. The apparatus of claim 10 wherein one of the sensors includes an audio sensor and one of the output units includes an audio output unit that produces an audible sensory alert output

13. The apparatus of claim 12 wherein the optimal alert mode setting includes an audio volume setting that depends on a noise level detected by the audio sensor.

14. The apparatus of claim 10 wherein one of the sensors includes a light sensor, and one of the output units includes a display output unit that produces a visual display output.

15. The apparatus of claim 10 wherein one of the sensors includes a proximity sensor and one of the output units includes a vibration output unit that produces a vibration output.

16. The apparatus of claim 13 wherein one of the sensors includes a global positioning system (GPS) sensor that produces a position signal, and further comprising;

a memory coupled to the processor that stores a database of transmission sensitive or restricted locations.

17. The apparatus of claim 16 wherein the audio volume setting comprises either a low volume or silent audible sensory alert output when the position signal indicates that the handheld communications device is in a transmission sensitive or restricted location.

18. The apparatus of claim 10 wherein one of the sensors includes a battery charging sensor that produces a signal which indicates when the handheld communications device is being charged.

19. The apparatus of claim 10 further comprising:

a control unit coupled to receive processor output signals that represent the certain alert mode setting, in response to the processor output signals the control unit generating control signals that cause the output units to produce the one or more sensory alert outputs.

20. A processor-implemented method for automatically alerting a user of a handheld communications device of an incoming transmission comprising;

generating a set of signals each of which is indicative of a physical parameter of a surrounding environment of the handheld communications device;

determining a certain alert mode setting based on the set of signals according to a programmed algorithm; and

producing one or more sensory alert outputs in response to the certain alert mode setting.

21. The processor-implemented method of claim 20 wherein the one or more sensory alert outputs comprise a temporal sequence of alert outputs.

22. The processor-implemented method of claim 20 wherein the one or more sensory alert outputs includes an audible sensory alert output.

23. The processor-implemented method of claim 20 wherein the one or more sensory alert outputs includes a visual output.

24. The processor-implemented method of claim 20 wherein the one or more sensory alert outputs includes a vibration output.

25. The processor-implemented method of claim 20 wherein one of the signals is a global position signal, and further comprising:

storing in a memory a database of transmission sensitive or restricted locations;

comparing the global position signal to the transmission sensitive or restricted locations stored in the database, the optimal alert mode setting comprising either a low volume or silent audible setting when the position signal indicates that the handheld communications device is in a transmission sensitive or restricted location.

26. A computer program product comprising a computer useable medium and computer readable code embodied on the computer useable medium, wherein upon execution by one or more processors, the computer readable code causes a handheld communications device to:

automatically determine, according to a programmed algorithm, a certain alert mode setting based on a set of sensor signals, each of the sensor signals indicating a physical parameter of a surrounding environment of the handhold communications device; and

produce one or more sensory alert outputs in response to the certain alert mode setting.

27. The computer program product of claim 26 wherein the one or more sensory alert outputs comprise a temporal sequence of alert outputs.

28. The computer program product of claim 26 wherein the one or more sensory alert outputs includes an audible sensory alert output.

29. The computer program product of claim 26 wherein the one or more sensory alert outputs includes a visual output.

30. The computer program product of claim 26 wherein the one or more sensory alert outputs includes a vibration output.

31. The computer program product of claim 26 wherein one of the sensor signals comprises global position signal, and execution of the computer readable code further causes the handheld communications device to:

compare the global position signal to a set of transmission sensitive or restricted locations stored in a database, the optimal alert mode setting comprising either a low volume or silent audible setting when the global position signal indicates that the handheld communications device is in a transmission sensitive or restricted location.

* * * * *