Existing and Emerging Broadband Technologies

October 2007

Andrew Afflerbach, Ph.D., PE
Director of Engineering
301.933.1488
www.CTCnet.us

CTC
COMMUNICATIONS
ENGINEERING & ANALYSIS
FOR THE PUBLIC INTEREST

©CTC 2007

Overview

- Wired
  - HFC (cable)
  - ADSL (telco)
  - Fiber-to-the-curb and fiber-to-the-premises
- Wireless
  - Technology comparison
  - 3G (EVDO, HSDPA)
  - 4G (WiFi, WiMAX)
- IP video

Entropic Communications, LLC, Exhibit 2006
Page 2006 - 2
IPR2024-00560, DISH Network, LLC v. Entropic, LLC

Architecture enables services

- Understand system architecture to determine services provided
- Analyze community needs to determine architecture
  - Citywide
  - Target areas
  - Rural/low density
  - Public safety
  - Business corridor

Entropic Communications, LLC, Exhibit 2006
Page 2006 - 3
IPR2024-00560, DISH Network, LLC v. Entropic, LLC

Hybrid Fiber/Coaxial (HFC) Architecture

- Most US cable systems upgraded or rebuilt as HFC systems
- Two-way services
- Most provide advanced, interactive services
  - Digital, HDTV, Internet, VoD

Entropic Communications, LLC, Exhibit 2006
Page 2006 - 4
IPR2024-00560, DISH Network, LLC v. Entropic, LLC

Typical Hybrid/Coaxial

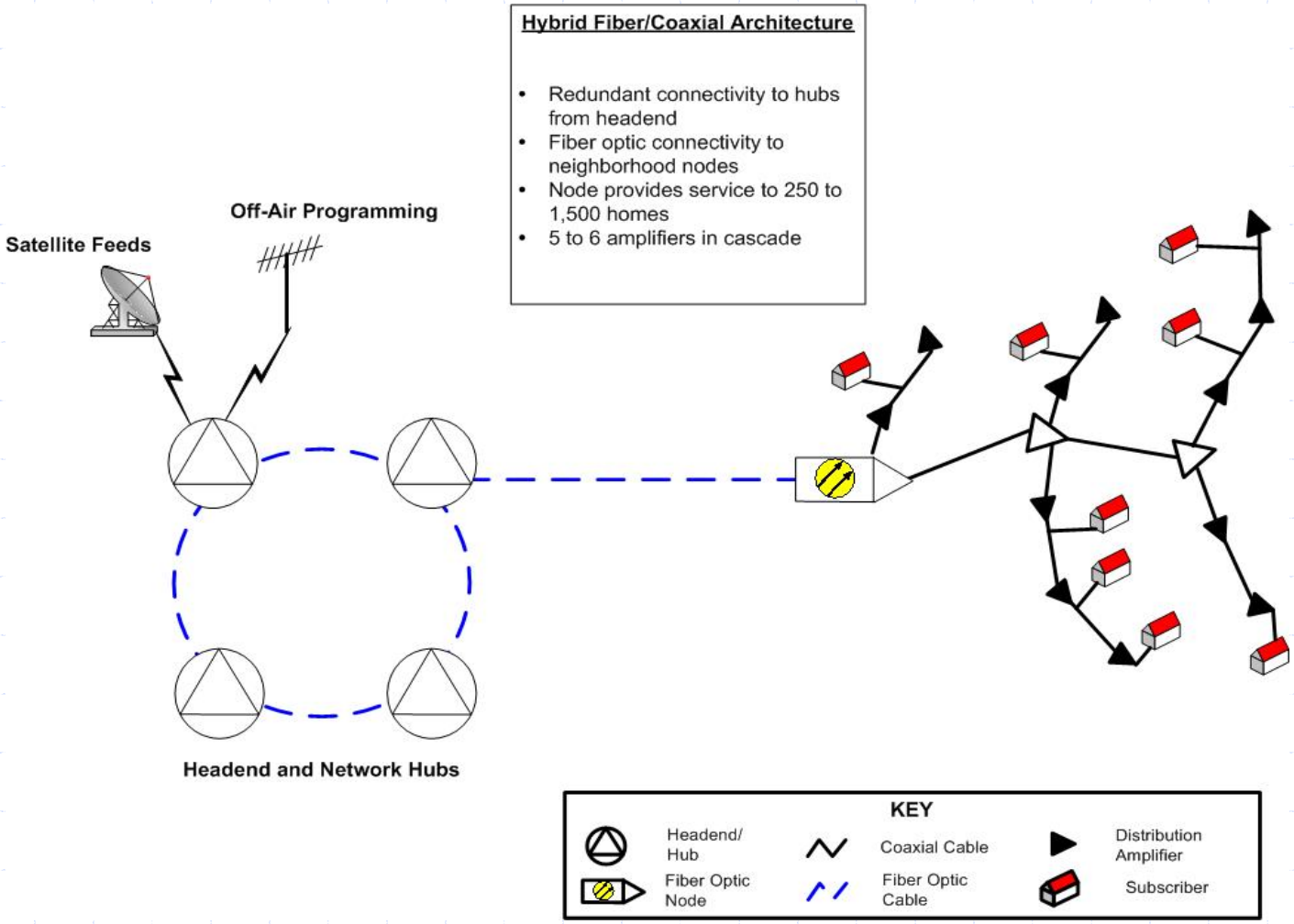

Entropic Communications, LLC, Exhibit 2006
Page 2006 - 5
IPR2024-00560, DISH Network, LLC v. Entropic, LLC

HFC Internal Wiring Needs

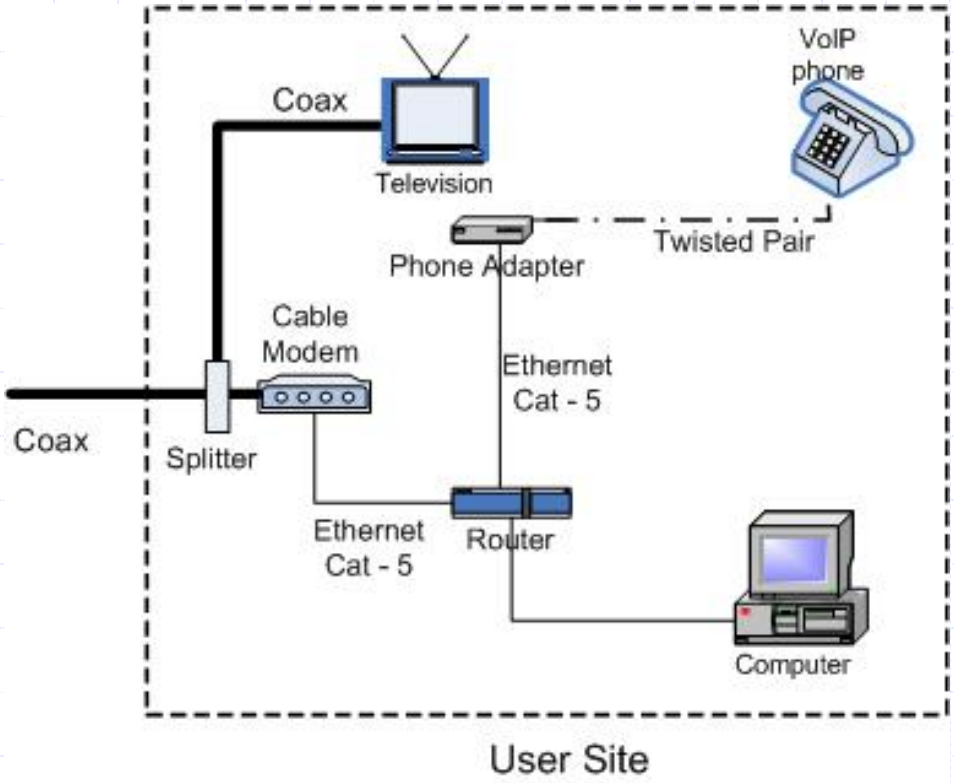

Entropic Communications, LLC, Exhibit 2006
Page 2006 - 6
IPR2024-00560, DISH Network, LLC v. Entropic, LLC

Overview of Cable Modem Services

- Utilize RF channel capacity to carry data
- Likely to remain competitive with most residential fiber in near to mid-term
- New modems based on the Data Over Cable Service Interface Specification Version 1.1 (DOCSIS 1.1) standard
- Maximum data rates per subscriber range between 3 Mbps and 10 Mbps for downstream access and between 256 kbps to 768 kbps for upstream access

Entropic Communications, LLC, Exhibit 2006
Page 2006 - 7
IPR2024-00560, DISH Network, LLC v. Entropic, LLC

Cable Modem Transmission

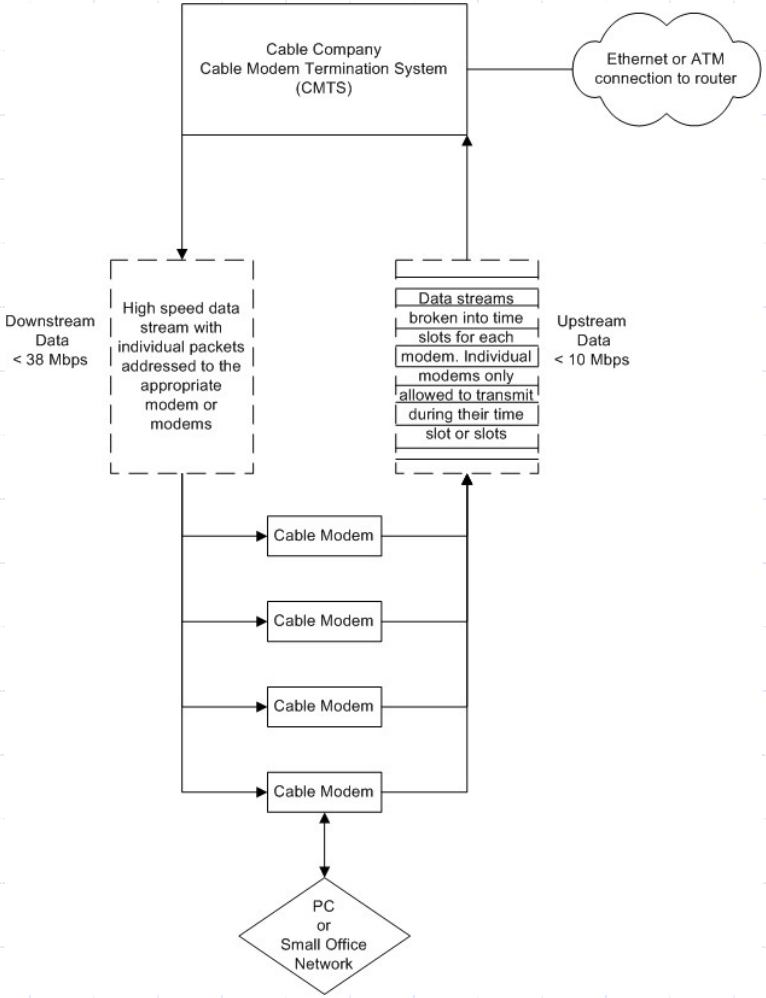

Entropic Communications, LLC, Exhibit 2006
Page 2006 - 8
IPR2024-00560, DISH Network, LLC v. Entropic, LLC

DOCSIS: Evolving Cable Modem Standards

- Developed by the CableLabs (industry consortium)
- Downstream channel data rates of 27 Mbps or 36 Mbps
- Almost all cable modem systems DOCSIS 1.1 compliant, many becoming DOCSIS 2.0 compliant
- Some vendors developing proprietary schemes with more downstream capacity
- DOCSIS 3.0
  - to provide symmetrical bandwidth of 100 Mbps
  - will use channel bonding

Entropic Communications, LLC, Exhibit 2006
Page 2006 - 9
IPR2024-00560, DISH Network, LLC v. Entropic, LLC

Comparison of DOCSIS standards

Comparison of DOCSIS generations

	DOCSIS 1.0	DOCSIS 1.1	DOCSIS 2.0	DOCSIS 3.0
Status	Widely Deployed	In the field now	Ratified but not widely deployed	Under Development
RF Channel Widths	6.0 MHz d/s 200 kHz to 3.2 MHz u/s	6.4 MHz d/s 200 kHz to 3.2 MHz u/s	6.4 MHz d/s 6.4 MHz u/s	Multiple 6 MHz channels with Channel bonding
Modulation Type	64-QAM or 256-QAM d/s QPSK u/s	256-QAM d/s 16-QAM u/s	256-QAM d/s 64-QAM u/s	256-QAM d/s each channel
Channel Data Capacity	27, 36 Mbps d/s 320 kbps to 5 Mbps u/s	40 Mbps d/s 10 Mbps u/s	40 Mbps d/s 30 Mbps u/s	>160 Mbps d/s >120 Mbps u/s
QoS Support	No	Yes	Yes	Yes
Security Support	No	Yes	Yes	Yes
OSS Support	No	Yes	Yes	Yes
Main Advantages	Low cost	Double u/s capacity QoS supported Security Enhancements	Symmetric Services Improved Interference tolerance	Much higher capacity
Services Enabled	High speed data Internet Access	Tiered Services with QoS	Peer-to-peer networking	Video over IP

Entropic Communications, LLC, Exhibit 2006
Page 2006 - 10
IPR2024-00560, DISH Network, LLC v. Entropic, LLC

ADSL2+

- High speed over telephone lines
- In metropolitan Washington DC, Cavalier uses Verizon leased lines to deliver voice, data and video over ADSL2+ using DSLAMs co-located in 215 Verizon Central Offices
- Delivers up to 15 Mbps to each customer
  - Speed depends on distance from central office or fiber optic node (DSLAM)

Entropic Communications, LLC, Exhibit 2006
Page 2006 - 11
IPR2024-00560, DISH Network, LLC v. Entropic, LLC

ADSL2+ (II)

- Permits simultaneous delivery of multiple channels of digital video, broadband DSL, and phone services- ALL INTERNET PROTOCOL (IP)
- Deployment in the Virginia areas uses an all-digital head-end in Richmond to acquire and to convert video streams to H.264/MPEG4 over hundreds of miles

Entropic Communications, LLC, Exhibit 2006
Page 2006 - 12
IPR2024-00560, DISH Network, LLC v. Entropic, LLC

Fiber-To-The-Curb (FTTC) Architecture

- Deployed by traditional telecommunications providers with copper twisted pair or coaxial for the last segment
- Used by AT&T Project Lightspeed
- Cox may use in some areas with high demand for interactive service

Entropic Communications, LLC, Exhibit 2006
Page 2006 - 13
IPR2024-00560, DISH Network, LLC v. Entropic, LLC

Typical FTTC Architecture

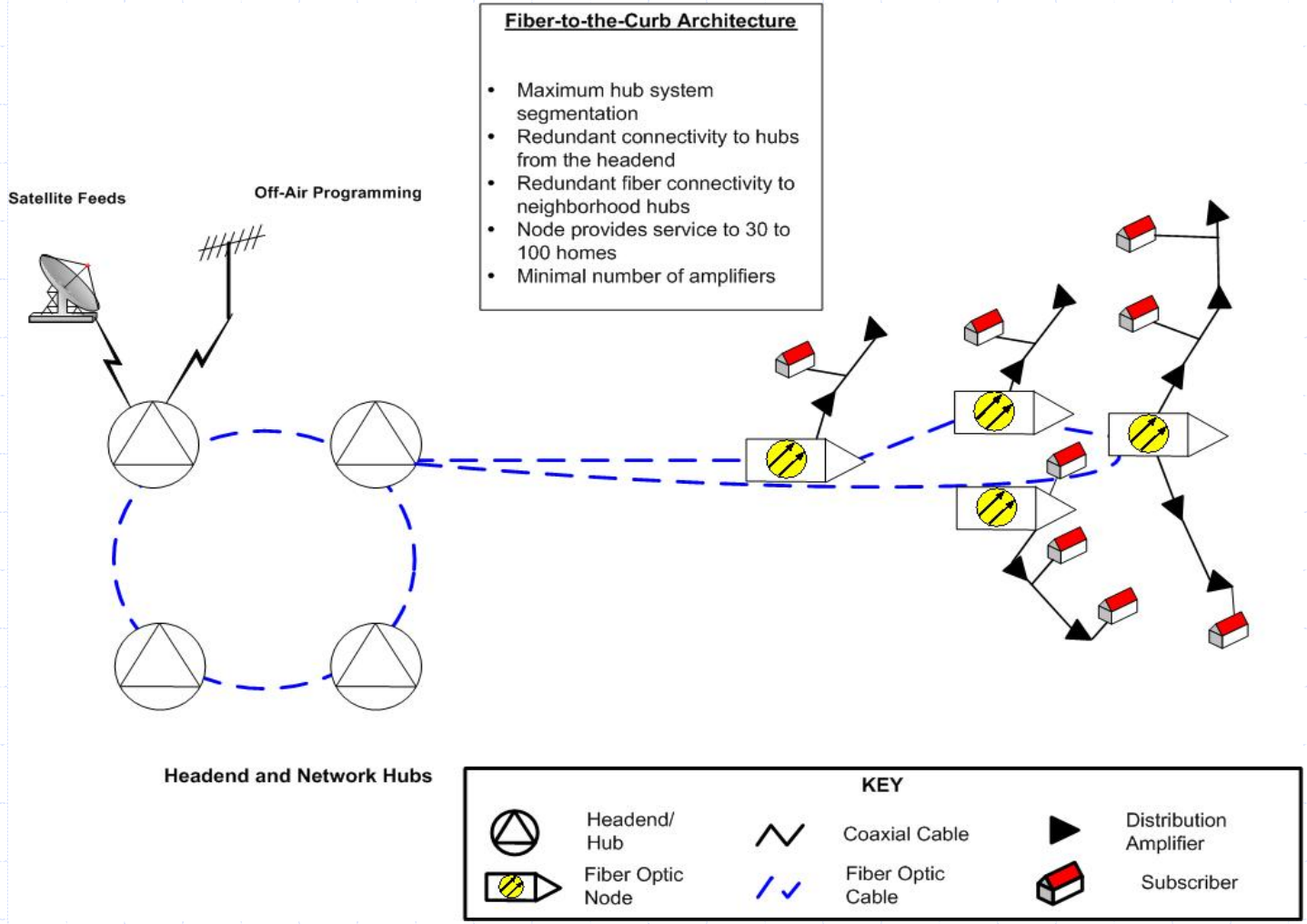

Entropic Communications, LLC, Exhibit 2006
Page 2006 - 14
IPR2024-00560, DISH Network, LLC v. Entropic, LLC

AT&T Project Lightspeed U-Verse

- AT&T Internet Protocol (IP) network and video backbone delivers video, and other applications
- VDSL-based system– 25 Mbps per premise
- Faster data than traditional DSL
- More capacity-limited than cable or fiber—HDTV and data especially
- AT&T has announced that in some green field areas they may deploy fiber-to-the-premise

Entropic Communications, LLC, Exhibit 2006
Page 2006 - 15
IPR2024-00560, DISH Network, LLC v. Entropic, LLC

AT&T U-verse/VDSL Architecture

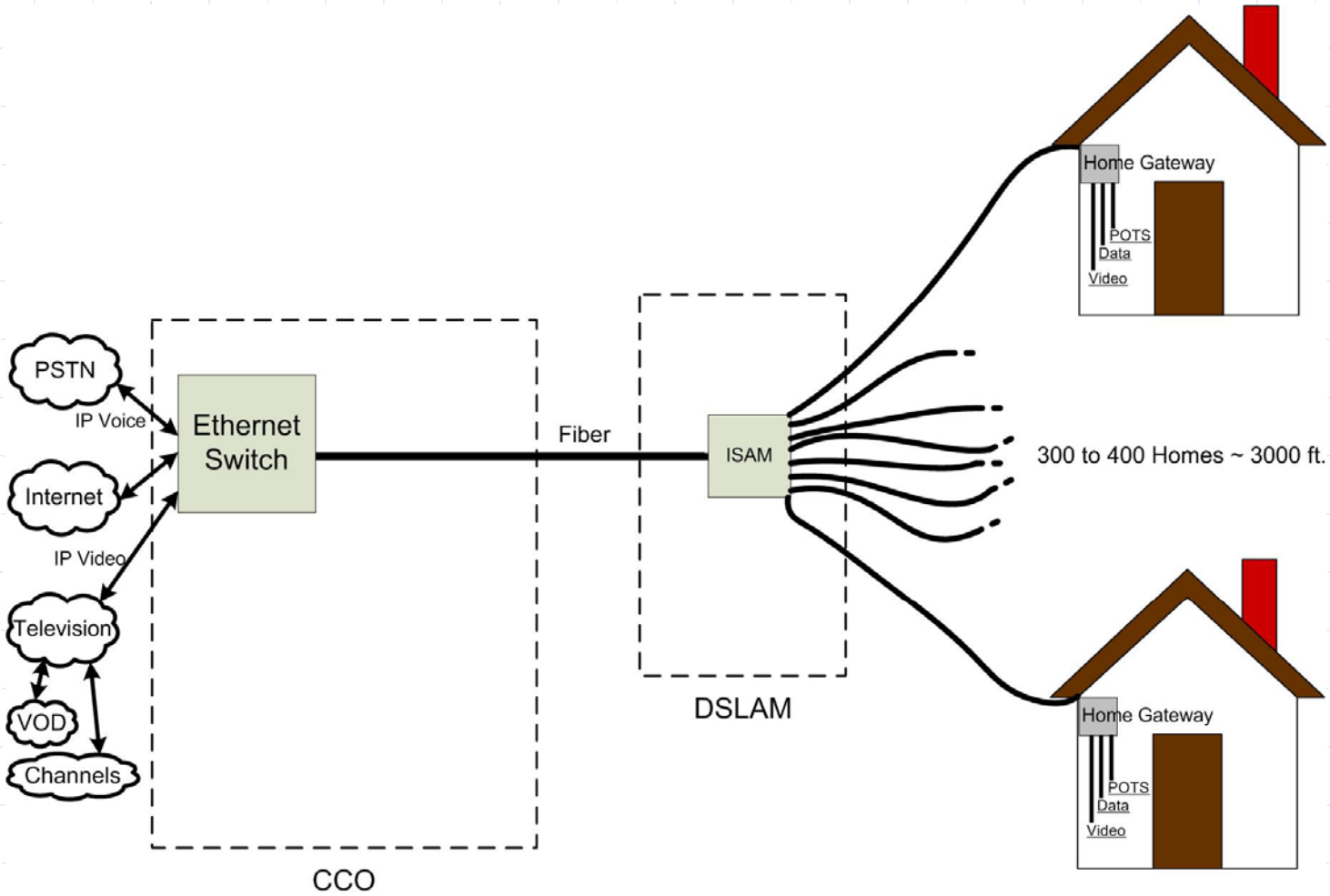

Entropic Communications, LLC, Exhibit 2006
Page 2006 - 16
IPR2024-00560, DISH Network, LLC v. Entropic, LLC

Fiber-To-the-Premises (FTTP) Architecture

- Optical fiber to the customer premises
- Deployed by Verizon in some areas (including many jurisdictions in the Washington DC area, but not DC itself, or Alexandria)
- Used by municipal utilities (Bristol, VA, UTOPIA in suburban Salt Lake City), also in Europe (Amsterdam, Paris)

Entropic Communications, LLC, Exhibit 2006
Page 2006 - 17
IPR2024-00560, DISH Network, LLC v. Entropic, LLC

Types of Technologies

Fiber always faster than wireless

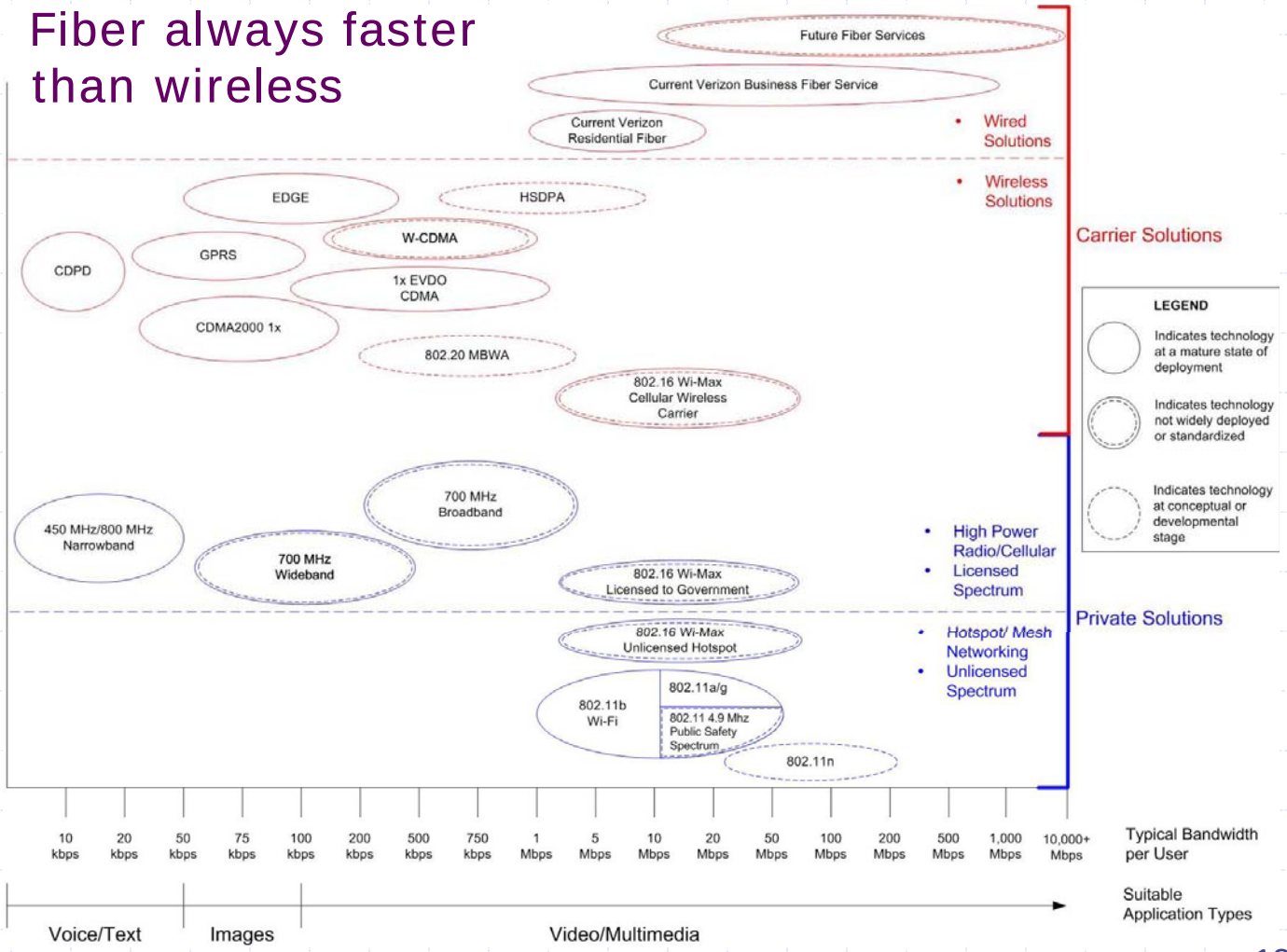

Entropic Communications, LLC, Exhibit 2006
Page 2006 - 18
IPR2024-00560, DISH Network, LLC v. Entropic, LLC

Wireless Broadband Technologies

- 3G (HSDPA and EVDO)
- WiFi
- WiMAX

Entropic Communications, LLC, Exhibit 2006
Page 2006 - 19
IPR2024-00560, DISH Network, LLC v. Entropic, LLC

Wireless Technology considerations

- Considerations
  - Lower bandwidth (speed)
  - Interference
  - Antennas
  - Coverage
  - Line of Sight
  - Spectrum limitations
  - Cost of service
  - Wired backhaul
  - Licensing

Entropic Communications, LLC, Exhibit 2006
Page 2006 - 20
IPR2024-00560, DISH Network, LLC v. Entropic, LLC

Wireless frequency spectrum

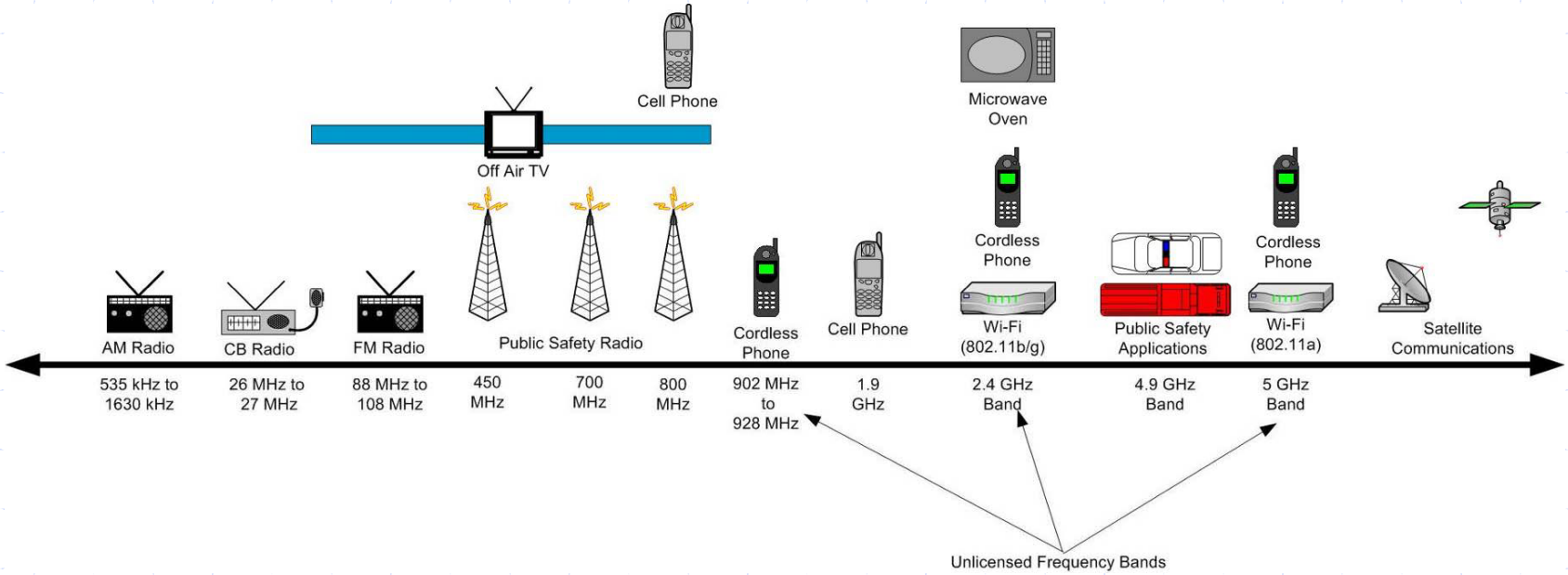

Entropic Communications, LLC, Exhibit 2006
Page 2006 - 21
IPR2024-00560, DISH Network, LLC v. Entropic, LLC

Unlicensed vs. Licensed

- Unlicensed - Share spectrum (frequencies) with other users
  - Not protected from interference
  - Same spectrum used by cordless phones, baby monitors, and numerous other consumer devices
- Licensed - Spectrum (frequencies) allocated to license holder by the FCC under spectrum allocation rules

Entropic Communications, LLC, Exhibit 2006
Page 2006 - 22
IPR2024-00560, DISH Network, LLC v. Entropic, LLC

3G Networks

- Wide area licensed cellular network
  - EXAMPLES– HSDPA, EVDO
  - Verizon, Cingular, Sprint are service providers (and licensees)
- Simultaneously transfers voice and non-voice data
- Using cellular/PCS antennas
  - 1 to 3 km spacing
- Speeds comparable to residential DSL
- Available in urban and suburban areas and along major roads
- $60 to $80 per month with 1-2 year contracts
- Increasingly used by government
  - First responders
  - Field staff

Entropic Communications, LLC, Exhibit 2006
Page 2006 - 23
IPR2024-00560, DISH Network, LLC v. Entropic, LLC

3G Cingular solution -- High Speed Downlink Packet Access (HSDPA)

- High-speed evolution of GSM/EDGE (Global System for Mobile Communications)
- Average download speed between 400 and 700 kbps, with burst over one Mbps
- Where not available, users receive service on lower-speed 2G EDGE network

Entropic Communications, LLC, Exhibit 2006
Page 2006 - 24
IPR2024-00560, DISH Network, LLC v. Entropic, LLC

3G Verizon/Sprint solution -- EVDO

- CDMA coding over a 1.25 MHz RF channel
  - Can be scaled to higher speeds or more customers aggregating more spectrum channels
- Developed by Qualcomm
- Backward compatible with legacy systems (1xRTT)
- Provided in U.S. by Sprint and Verizon

Entropic Communications, LLC, Exhibit 2006
Page 2006 - 25
IPR2024-00560, DISH Network, LLC v. Entropic, LLC

3G Verizon/Sprint solution -- EVDO (II)

- Maximum burst downlink rate from 2.45 Mbps to 3.1 Mbps
- Rev A increased maximum uplink data rate from 153 kbps to 1.8 Mbps
- May be technology for planned 700 MHz broadband public safety network

Entropic Communications, LLC, Exhibit 2006
Page 2006 - 26
IPR2024-00560, DISH Network, LLC v. Entropic, LLC

WiFi (wireless fidelity)

- Unlicensed hotspot or mesh communications
- IEEE Standard 802.11
- 11 channels in the unlicensed 2.4 (b and g) and 5 GHz (a) radio bands
- Maximum aggregate rates of 11 Mbps (802.11b) or 54 Mbps (802.11a/g)
- Access points have limited area of coverage but can be extended by adding additional access points
- WiFi interfaces standard in nearly all new laptops and PDAs

Entropic Communications, LLC, Exhibit 2006
Page 2006 - 27
IPR2024-00560, DISH Network, LLC v. Entropic, LLC

Hotspot network infrastructure requirements (for Citywide coverage)

- 20-30 access points (radios) per square mile
  - Access point hardware
    - $500 to a few thousand each
  - Backhaul connectivity at least every square mile (assuming use of mesh technology)
    - More backhaul likely needed
    - Wired or point-to-multipoint wireless backhaul

Entropic Communications, LLC, Exhibit 2006
Page 2006 - 28
IPR2024-00560, DISH Network, LLC v. Entropic, LLC

Mesh Network

- Common architecture for citywide deployment
- Distributed gateway devices
- “Self healing”
- WiFi and fiber backhaul
- Multiple radios in tight formation

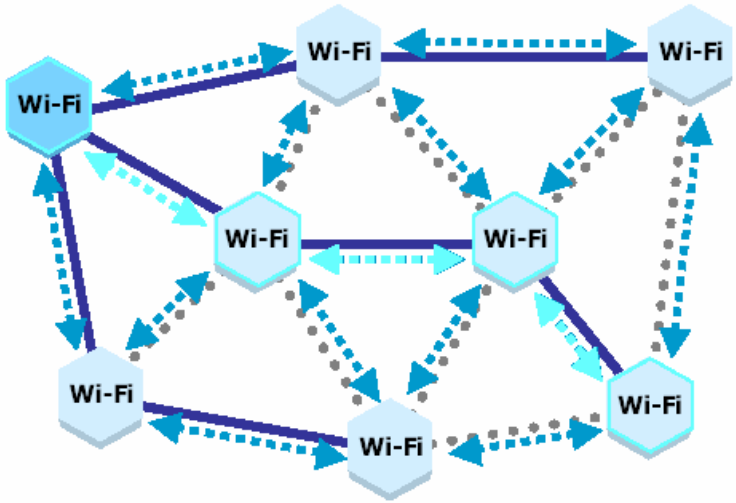

Entropic Communications, LLC, Exhibit 2006
Page 2006 - 29
IPR2024-00560, DISH Network, LLC v. Entropic, LLC

WiFi Standards

802.11a	802.11b	802.11g
5 GHz	2.4 GHz	2.4 GHz
54 Mbps	11 Mbps	54 Mbps
Less interference, more bandwidth	Best over-all coverage range	Faster than 802.11b and better range than 802.11a
Not as widely implemented, shorter range	Not as fast as other technologies	Less range than 802.11b

Other 802.11 standards include 802.11e (QoS), i (security), n (MIMO), and r (roaming)

Entropic Communications, LLC, Exhibit 2006
Page 2006 - 30
IPR2024-00560, DISH Network, LLC v. Entropic, LLC

WiMax

Worldwide Interoperability Microwave Access

- IEEE standards-based technology (IEEE 802.16) officially known as WirelessMAN
- Point-to-multipoint implementation
- Sprint and Clearwire deploying WiMAX in metropolitan Washington, DC and Chicago

Entropic Communications, LLC, Exhibit 2006
Page 2006 - 31
IPR2024-00560, DISH Network, LLC v. Entropic, LLC

WiMAX

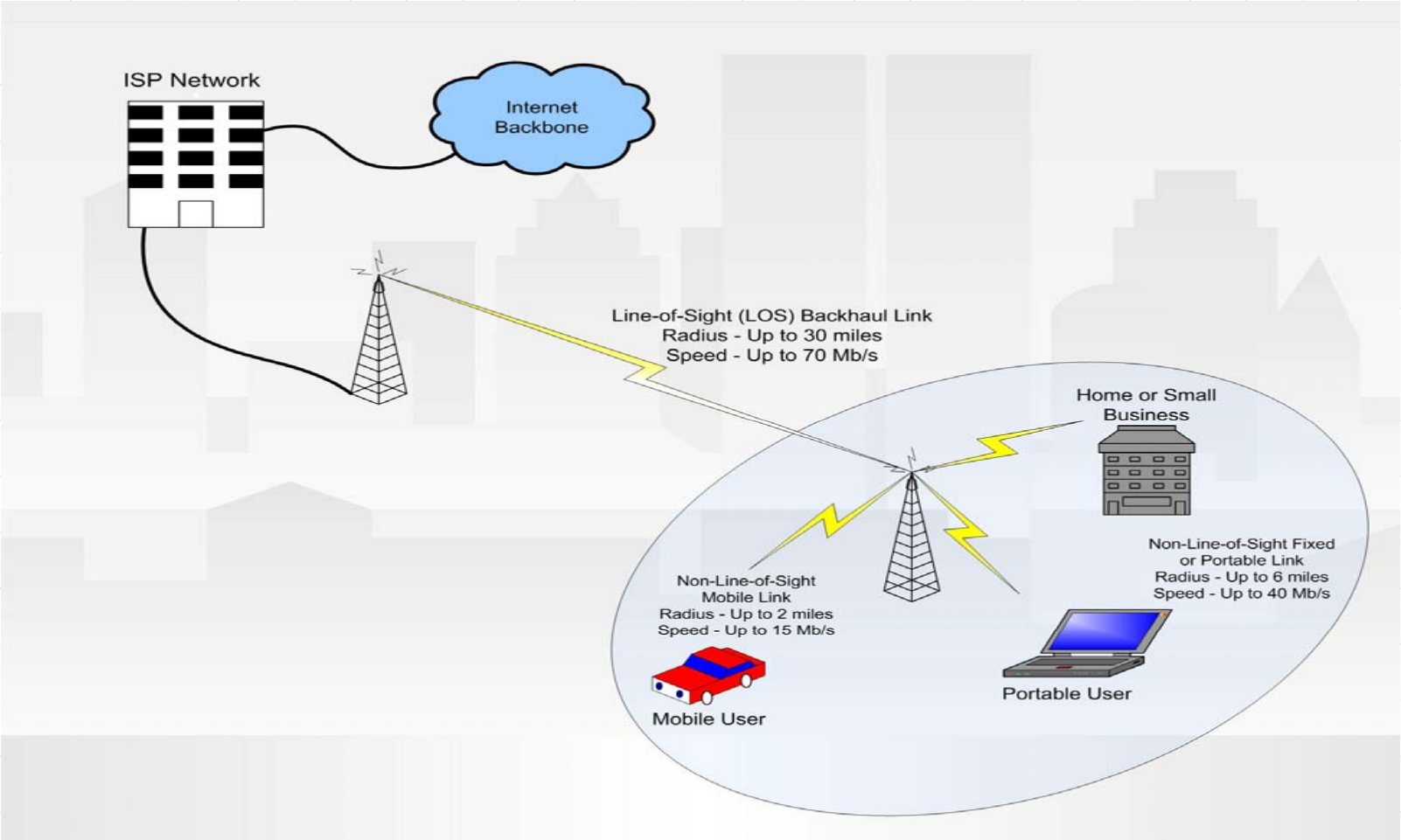

Entropic Communications, LLC, Exhibit 2006
Page 2006 - 32
IPR2024-00560, DISH Network, LLC v. Entropic, LLC

WiMAX standard – 802.16

- 802.16d – Also known as 802.16-2004
  - Point-to-multipoint implementation
  - WiMAX certification allows vendors with 802.16d products to sell their equipment as WiMAX certified, thus ensuring a level of interoperability with other certified products
- 802.16e – Adds mobility
  - IEEE approved Dec. 2005
  - Certified equipment expected soon
  - Pre-standard equipment available

Entropic Communications, LLC, Exhibit 2006
Page 2006 - 33
IPR2024-00560, DISH Network, LLC v. Entropic, LLC

Summary Comparison of Broadband Access System Architectures

	Hybrid Fiber/Coaxial	Fiber-to-the-Premises	Wireless Broadband 1xEvDO	Wireless Broadband DVB-H
Network Attributes				
Transmission Medium	Optical Fiber & Coaxial Cable	Optical Fiber	Air	Air
Capacity	750 or 860 MHz (80 analog TV channels, multiple digital video and music channels) per coaxial cable	More than 40 THz optical fiber spectrum; End electronics limited	1.25 MHz Channel	5, 6, 7, or 8 MHz Channels
Status	Most widely used	Extensive Telco Deployment	Service Available	Service Announced
Directionality	Two-way	Two-way	Bi-directional	Bi-directional
Node Area	500 – 2000 subscribers per node	32 subscribers per PON	NA	NA
Optical Fiber Penetration	<3000 feet from subscriber	To the subscriber premises	To Tower	To Tower
Number of active components in series	Up to 8 RF amplifiers; typically 4 or 5	No RF amplifiers or any other active component in the outside cable plant	NA	NA
Redundant Architecture	Between headend and hubs	Between headend and hubs (COs)	Micro diversity, Backhaul Network	Backhaul Network

Entropic Communications, LLC, Exhibit 2006
Page 2006 - 34
IPR2024-00560, DISH Network, LLC v. Entropic, LLC

Summary Comparison of Broadband Access System Architectures

	Hybrid Fiber/Coaxial	Fiber-to-the-Premises	Wireless Broadband 1xEvDO	Wireless Broadband DVB-H
Service Attributes				
Video Delivery	RF	RF or IP	IP	IP
Digital TV	Yes	Yes	Only Digital	Only Digital
VoD capability	Yes***	Yes	No	No
Telephony	Circuit Switched or IP	Currently Circuit Switched; IP possible	On overlay frequency	NA
Typical phone capability per customer	1-2 phone lines*	Up to 4 for single family home, Limited by CPE design;	Single hand-set	Single hand-set
Data Technology	DOCSIS	BPON, GPON	EvDO	DVB-H
Data Capacity	Downstream: 40 Mbps Upstream: 2 Mbps per coaxial segment	BPON: 1.2 Gbps d/s 622 Mbps u/s GPON: 2.4 Gbps both directions per PON	Downstream: ~3 Mbps Upstream: ~2 Mbps	Downstream: ~15 Mbps Upstream: ~2 Mbps
Typical data capacity per customer	128 kbps upstream, 1-2 Mbps downstream	Depends on Electronics BPON: ~40 Mbps d/s, ~2 Mbps u/s GPON: ~40 Mbps both directions	Adaptive, Downstream: 0.6 – 1.2 Mbps per user Upstream: 10 – 154 kbps per user	~100 – 400 kbps

Entropic Communications, LLC, Exhibit 2006
Page 2006 - 35
IPR2024-00560, DISH Network, LLC v. Entropic, LLC

Data Services and Technologies

- Cable modem service overview
- DOCSIS Defined

Entropic Communications, LLC, Exhibit 2006
Page 2006 - 36
IPR2024-00560, DISH Network, LLC v. Entropic, LLC

Internet Protocol Television (IPTV) Overview

- Video content delivered over a private network using Internet protocols
- Viewed on a traditional TV on a computer monitor
- Traditional telecommunications providers such as Verizon and AT&T planning on IPTV
- Cable providers likely to implement, especially for video-on-demand

Entropic Communications, LLC, Exhibit 2006
Page 2006 - 37
IPR2024-00560, DISH Network, LLC v. Entropic, LLC

Internet Protocol (IP)-Based Multichannel Video Delivery Services

- MPEG2, MPEG4 and Windows Media technology
- Closed
- Open
  - Policy and copyright issues

Entropic Communications, LLC, Exhibit 2006
Page 2006 - 38
IPR2024-00560, DISH Network, LLC v. Entropic, LLC

IPTV Delivery Mechanisms

- Delivered over any IP-compatible network architecture
  - Cable, fiber, telco, wireless
- Web streaming—to the TV
- Conceivably opens delivery to non-facilities based providers
  - Peer-to-peer
  - YouTube
  - Netflix
- Streams received, controlled, and rendered by the set-top box (STB) in the subscriber premise
- Subscriber controls STB with a remote control

Entropic Communications, LLC, Exhibit 2006
Page 2006 - 39
IPR2024-00560, DISH Network, LLC v. Entropic, LLC

IPTV Set-Top Boxes

- Similar in appearance and operation to traditional set-top boxes
- Convert selected stream to a suitable format
- "*Tunerless*" – decoding video from DOCSIS or Ethernet packet stream, not "channels"
- Software can be downloaded to create new features
- Standard application programming interfaces (APIs) allow for interoperability

Entropic Communications, LLC, Exhibit 2006
Page 2006 - 40
IPR2024-00560, DISH Network, LLC v. Entropic, LLC

Summary

- Range of wired and wireless technology
- Capacity demand increasing
  - Video, peer-to-peer, gaming, telemedicine, other
- Wired always the backbone technology
- Evolution to Internet Protocol (IP)

Entropic Communications, LLC, Exhibit 2006
Page 2006 - 41
IPR2024-00560, DISH Network, LLC v. Entropic, LLC

Questions?

CTC
COMMUNICATIONS
ENGINEERING & ANALYSIS
FOR THE PUBLIC INTEREST

Columbia Telecommunications Corporation
10613 Concord Street
Kensington MD 20895
www.CTCnet.us . 301.933.1488

Entropic Communications, LLC, Exhibit 2006
Page 2006 - 42
IPR2024-00560, DISH Network, LLC v. Entropic, LLC