UNITED STATES PATENT AND TRADEMARK OFFICE

BEFORE THE PATENT TRIAL AND APPEAL BOARD

JUNIPER NETWORKS, INC.,
Petitioner,

v.

MONARCH NETWORKING SOLUTIONS LLC,
Patent Owner.

U.S. Patent No. 8,130,775

"Mechanism for protecting a pseudo-wire"

IPR2024-00561

PETITION FOR *INTER PARTES* REVIEW

I. INTRODUCTION 1

II. MANDATORY NOTICES 4

A. Real Party-in-Interest (37 C.F.R. §42.8(b)(1)) 4

B. Related Matters (37 C.F.R. §42.8(b)(2)) 4

1. Related District Court Proceedings 4

2. Related Patent Office Proceedings 5

C. Lead and Back-up Counsel and Service Information 5

III. REQUIREMENTS FOR IPR 6

A. Payment of Fees 6

B. Grounds for Standing 6

C. Statement and Relief Requested 7

IV. TECHNOLOGY BACKGROUND 7

A. Pseudo-Wires 7

B. Multi-Segment Pseudo-Wires 8

C. Sharing Connections or Links in Computer Networks 9

V. OVERVIEW OF THE '775 PATENT 11

A. Priority 11

B. Specification 11

C. Applicant Admitted Prior Art 14

D. Original Prosecution 16

E. Patent Office Proceedings 17

VI. LEVEL OF ORDINARY SKILL IN THE ART 19

VII. CLAIM CONSTRUCTION 19

VIII. GROUNDS 20

A. Ground 1: Claims 1 and 6 Would Have Been Obvious in View of Wainner and Bocci 20

1. Wainner (EX1030) 20

2. Bocci (EX1031) 22

3. The Wainner-Bocci Combination 24

4. Motivations to Combine Wainner and Bocci 24

5. Claim 1 28

6. Claim 6 53

B. Ground 2: Claims 1 and 6 Would Have Been Obvious in View of Kamite and Bocci 55

1. Kamite (EX1035) 55

2. The Kamite-Bocci Combination 57

3. Motivations to Combine Kamite and Bocci 58

4. Claim 1 62

5. Claim 6 78

IX. DISCRETIONARY DENIAL IS NOT APPROPRIATE 80

A. Discretionary Denial Under the *Fintiv* Factors Is Not Appropriate 80

1. Factor 1: Whether the District Court Granted a Stay or a Stay May Be Granted If a Proceeding Is Instituted 81

2. Factor 2: Proximity of the Court's Trial Date to the Board's Projected Statutory Deadline for a Final Written Decision 81

3. Factor 3: Investment in the Parallel Proceeding by the Court and the Parties 81

4. Factor 4: Overlap Between Issues Raised in the Petition and in the Parallel Proceeding....82

5. Factor 5: Whether the Petitioner and the Defendant in the Parallel Proceeding Are the Same Party....82

6. Factor 6: Other Circumstances That Impact the Board's Exercise of Discretion, Including the Merits....82

B. Discretionary Denial Under 35 U.S.C. §325(d) Is Not Appropriate....83

1. Step One of Advanced Bionics....83

2. Step Two of Advanced Bionics....85

X. CONCLUSION....87

CERTIFICATE OF WORD COUNT....88

CERTIFICATE OF SERVICE....89

PETITIONER'S EXHIBIT LIST

EX1001	U.S. Patent No. 8,130,775 to Frederic Jounay et al. ("'775 patent")
EX1002	Prosecution History of U.S. Patent No. 8,130,775 ("'775 Prosecution History")
EX1003	Declaration of Dr. Samrat Bhattacharjee under 37 C.F.R. §1.68
EX1004	*Curriculum Vitae o*f Dr. Bhattacharjee
EX1005	Declaration of Dr. Sylvia Hall-Ellis under 37 C.F.R. §1.68
EX1006	*Curriculum Vitae* of Dr. Hall-Ellis
EX1007	Declaration of Alexa Morris
EX1008	*Ex Parte* Reexamination History of the '775 patent as U.S. Application No. 90/014,701
EX1009	RFC 791, "Internet Protocol," IETF (Sept. 1981), available at https://datatracker.ietf.org/doc/html/rfc791
EX1010	RFC 3985, "Pseudo Wire Emulation Edge-to-Edge (PWE3) Architecture," IETF (Mar. 2005), available at https://datatracker.ietf.org/doc/html/rfc3985
EX1011	M. Bocci et al., Enhancing Converged MPLS Data Networks with ATM, Frame Relay and Ethernet Interworking, Alcatel (2004), available at https://citeseerx.ist.psu.edu/document?repid=rep1&type=pdf&doi=58f0c897e947ac3aa63a8cde807d2c360d74f1a2
EX1012	L. Ghein, "MPLS Fundamentals," Cisco Sys. (Nov. 2006)
EX1013	M. Sagheer & P. Shah, "L2VPN Tutorial: Path to Convergence," Cisco Sys. (2006)
EX1014	L. Martini et al., "Segmented Pseudo Wire," IETF (Oct. 2006), available at https://datatracker.ietf.org/doc/html/draft-ietf-pwe3-segmented-pw-03

EX1015	U.S. Patent No. 8,107,473 to Ijsbrand Wijnands et al. ("Wijnands")
EX1016	U.S. Patent No. 7,477,642 to Rahul Aggarwal et al. ("Aggarwal")
EX1017	U.S. Patent No. 7,411,964 to Yoshiniko Suemura ("Suemura")
EX1018	U.S. Patent No. 8,799,472 to Alan Noble ("Noble")
EX1019	B. Andrew & P. Machanick, "The Virtual Multicasting Approach to Bandwidth Conservation," Univ. of the Witwatersrand (2000)
EX1020	T. Yu Lo et al., "Design of Tunnel-Based Protection Schemes in Multigranularity Optical Cross-Connect Networks," Nat'l Chiao Tung Univ. (2005), available at https://ieeexplore.ieee.org/document/1589631
EX1021	U.S. Patent No. 5,115,495 to Paul Tsuchiya et al. ("Tsuchiya")
EX1022	M. Gupta et al., "A Feasibility Study for Power Management in LAN Switches," IEEE (Oct. 2004), available at https://ieeexplore.ieee.org/document/1348125
EX1023	T. Lo & C. Chen, "Tunnel Allocation and Protection in Hierarchical Cross-Connect WDM Networks," Nat'l Chiao Tung Univ. (June 2004), available at https://ir.nctu.edu.tw/handle/11536/53458
EX1024	Y. Tsang et al., "Network Delay Tomography," IEEE (July 15, 2003), available at https://ieeexplore.ieee.org/document/1212670
EX1025	J. Mogul et al., "Design, Implementation, and Evaluation of Duplicate Transfer Detection in HTTP," USENIX Assoc. (Mar. 2004)
EX1026	Petition for *Inter Partes* Review, *Cisco Sys., Inc. v. Monarch Networking Sol'ns LLC*, IPR2020-01226, Paper 2 (PTAB July 6, 2020)
EX1027	Patent Owner's Preliminary Response, *Cisco Sys., Inc. v. Monarch Networking Sol'ns LLC*, IPR2020-01226, Paper 8 (PTAB Dec. 8, 2020)
EX1028	Institution Decision, *Cisco Sys., Inc. v. Monarch Networking Sol'ns LLC*, IPR2020-01226, Paper 11 (PTAB Mar. 4, 2021)

EX1029	Claim Construction Memorandum and Order, *Monarch Networking Sol'ns LLC v. Cisco Sys., Inc.*, No. 2:20-cv-00015-JRG (E.D. Tex. Jan. 7, 2021)
EX1030	U.S. Application Publication No. 2007/0239891 to Wainner et al. ("Wainner")
EX1031	M. Bocci & S. Bryant, "An Architecture for Multi-Segment Pseudo Wire Emulation Edge-to-Edge," IETF (Jan. 11, 2006), available at https://www.ietf.org/proceedings/65/IDs/draft-ietf-pwe3-ms-pw-arch-00 ("Bocci")
EX1032	Exhibit 5 to Opposition to Motion to Strike Opinions of Cisco's Expert, *Monarch Networking Sol'ns LLC v. Cisco Sys., Inc.*, No. 2:20-cv-00015-JRG (Mar. 10, 2021), ECF No. 216
EX1033	Complaint, *Monarch Networking Sol'ns LLC v. Cisco Sys., Inc.*, No. 2:20-cv-00015-JRG (Jan. 21, 2020), ECF No. 1
EX1034	Motion to Strike Opinions of Cisco's Expert, *Monarch Networking Sol'ns LLC v. Cisco Sys., Inc.*, No. 2:20-cv-00015-JRG (Feb. 24, 2021), ECF No. 171
EX1035	Certified Translation of JP Patent Application No. 2006-129359 to Kamite et al. ("Kamite")
EX1036	JP Patent Application No. 2006-129359 to Kamite et al.
EX1037	RFC 4447, "Pseudowire Setup and Maintenance Using the Label Distribution Protocol (LDP)," IETF (Apr. 2006), available at https://datatracker.ietf.org/doc/html/rfc4447
EX1038	Monarch's Opposition to Juniper's Motion to Transfer, *Monarch Networking Solutions LLC v. Juniper Networks, Inc.*, No. 1:23-cv-670-TSE-LRV (E.D. Va. Oct. 3, 2023), ECF No. 52
EX1039	Complaint, *Monarch Networking Sol'ns LLC v. Juniper Networks, Inc.*, No. 1:23-cv-670-TSE-LRV (E.D. Va. May 23, 2023), ECF No. 1

I. INTRODUCTION

Juniper Networks, Inc. ("Petitioner") requests IPR of claims 1 and 6 ("Challenged Claims") of U.S. Patent No. 8,130,775 (the "'775 patent").[1] The '775 patent claims the simple idea of sharing a connection in a particular network environment, called a "pseudo-wire." The patent admits that the network configuration depicted in Figure 2(AA) is known prior art:

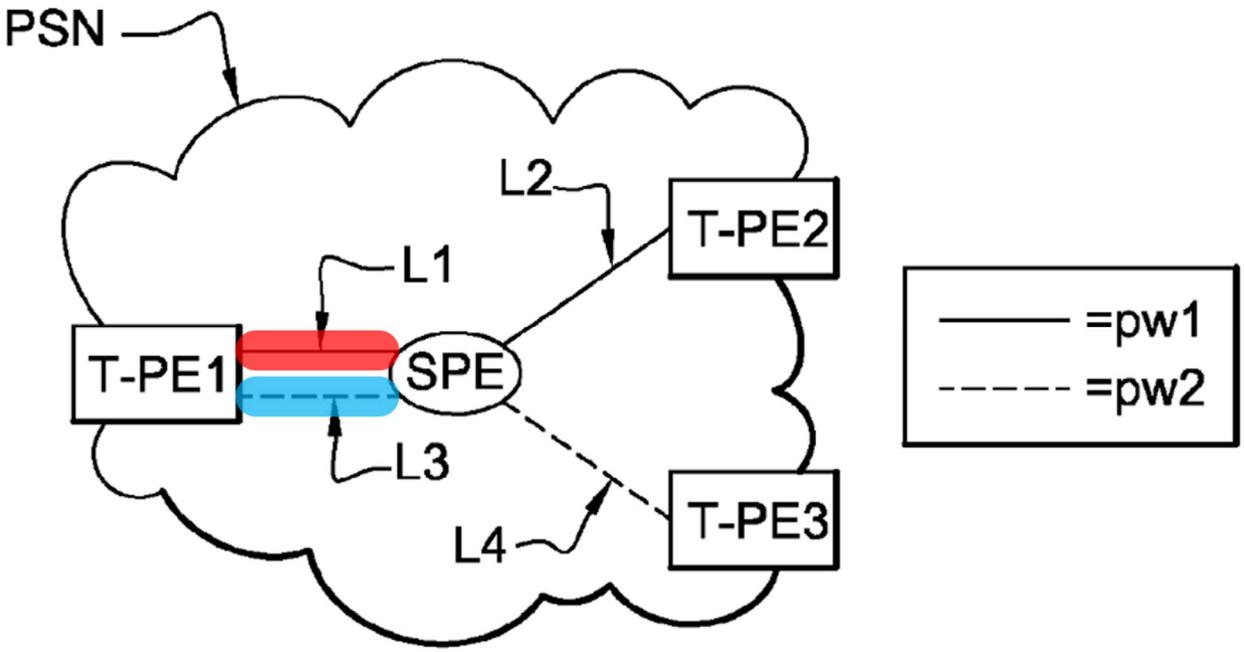

EX1001, Fig. 2(AA) (highlighted), 5:43-44. The only purported "invention" of the patent is combining connections L1 (red in the previous figure) and L3 (blue in the previous figure) into a connection L1 (purple in the subsequent figure) from the input router to the intermediate router, as depicted in Figure 3:

[1] The pre-AIA statutory framework applies to the '775 patent.

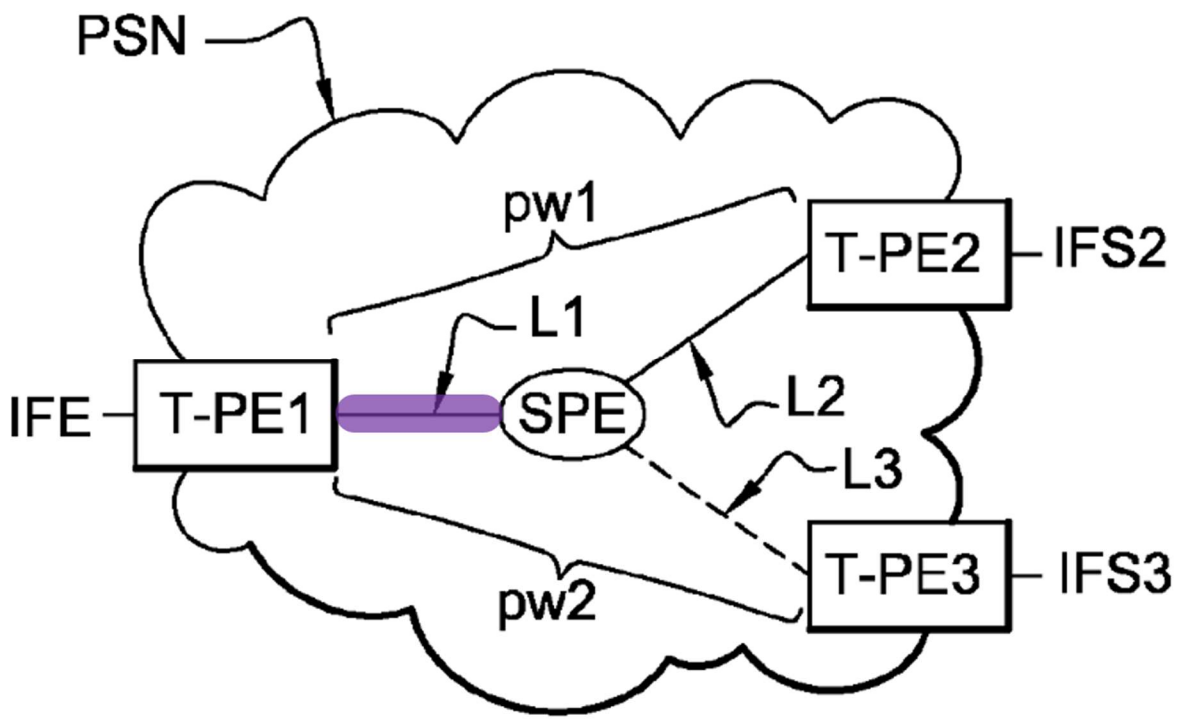

Id., Fig. 3 (highlighted), 5:45-46. The alleged invention is described in just the last ***11 words*** of claim 1:

> 1. A method of setting up at least two pseudo-wires able to broadcast a data stream, comprising:
>
> > setting up a first pseudo-wire comprising a first link set up between an input router of a packet-switched network and an intermediate router of the packet-switched network and a second link set up between said intermediate router and a first output router of the packet-switched network; and
> >
> > setting up a second pseudo-wire between said input router and a second output router of the packet-switched network, wherein the second pseudo-wire comprises said first link and a third link set up between said intermediate router and said second output router, **said first link being shared by the first and second pseudo-wires**.

Id., 12:14-27.

As this petition shows, sharing a connection in pseudo-wires was pervasive, widely known, and entirely conventional. For example, both Wainner (EX1030) and Kamite (EX1035) disclose sharing a link (highlighted purple in the figures below) between multiple pseudo-wires:

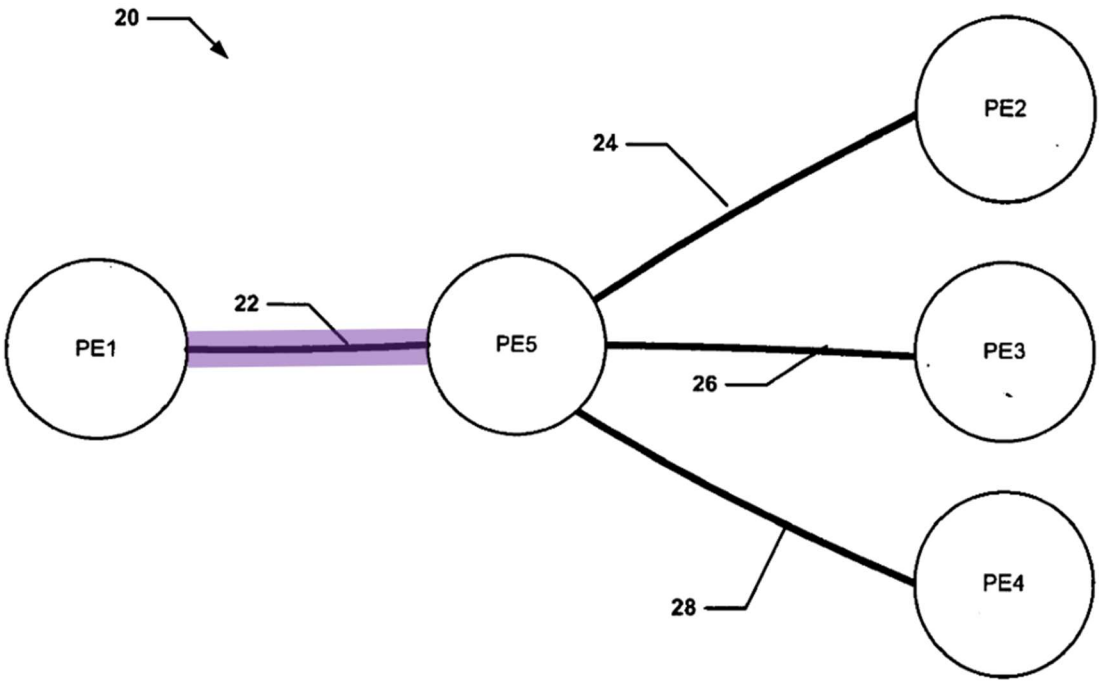

EX1030, Fig. 2 (highlighted).

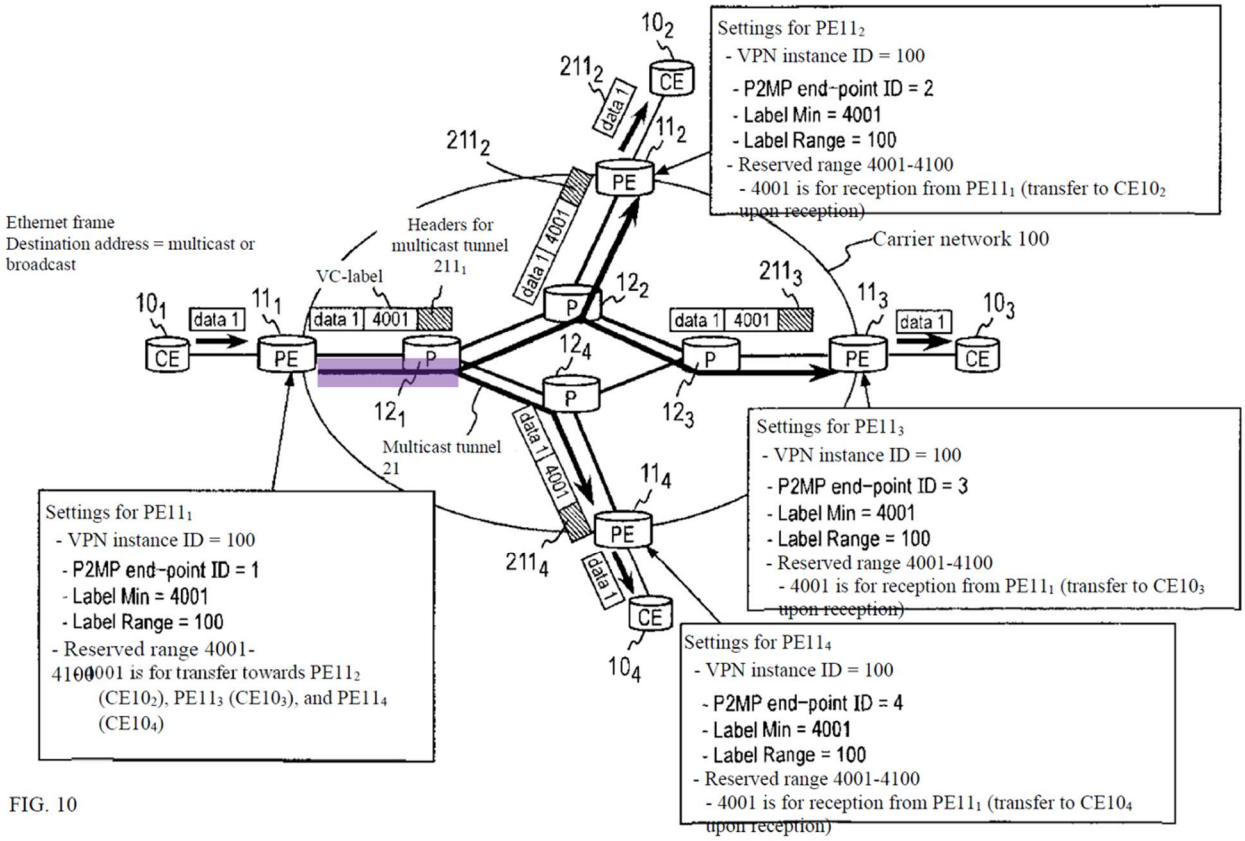

FIG. 10

EX1035, Fig. 10 (highlighted).

II. MANDATORY NOTICES

A. Real Party-in-Interest (37 C.F.R. §42.8(b)(1))

Petitioner certifies that the real party-in-interest is Juniper Networks, Inc.

B. Related Matters (37 C.F.R. §42.8(b)(2))

1. Related District Court Proceedings

As of the filing date of this Petition, the '775 patent is or has been involved in the following district court proceedings:

- *Monarch Networking Solutions LLC v. Cisco Systems, Inc.*, Case No. 2:20-cv-00015 (E.D. Tex. Jan. 21, 2020);

- *Monarch Networking Solutions LLC v. Juniper Networks, Inc.*, Case No. 1:23-cv-00670-TSE-LRV (E.D. Va. May 23, 2023), transferred to the Northern District of California as *Monarch Networking Solutions LLC v. Juniper Networks, Inc.*, Case No. 3:23-cv-05076-RFL (N.D. Cal. Oct. 4, 2023).

Petitioner is currently unaware of any other lawsuits involving the '775 patent.

2. Related Patent Office Proceedings

As of the filing date of this Petition, the '775 patent is or has been involved in the following patent office proceedings:

- *Cisco Systems, Inc. v. Monarch Networking Solutions LLC*, IPR2020-01226 (PTAB July 6, 2020);
- *Ex Parte* Reexamination of Patent Application No. 90/014,701 (Mar. 12, 2021), EX1008.

C. Lead and Back-up Counsel and Service Information

Petitioner provides the following counsel and service information. Pursuant to 37 C.F.R. §42.10(b), a Power of Attorney accompanies this Petition.

LEAD COUNSEL	BACK-UP COUNSEL
Todd M. Briggs (Reg. No. 44,040) Quinn Emanuel Urquhart & Sullivan, LLP 555 Twin Dolphin Drive, 5th Floor Redwood Shores, CA 94065	James M. Glass (Reg. No. 46,729) Quinn Emanuel Urquhart & Sullivan, LLP 51 Madison Ave., 22nd Floor

toddbriggs@quinnemanuel.com (650) 801-5000	New York, New York 10010 jimglass@quinnemanuel.com (212) 847-7000 Nima Hefazi (Reg. No. 63,658) Quinn Emanuel Urquhart & Sullivan, LLP 865 S. Figueroa St., 10th Floor Los Angeles, California 90017 nimahefazi@quinnemanuel.com (213) 624-7707 Kevin Johnson (Reg. No. 38,927) Quinn Emanuel Urquhart & Sullivan, LLP 555 Twin Dolphin Drive, 5th Floor Redwood Shores, CA 94065 kevinjohnson@quinnemanuel.com (650) 801-5000

III. REQUIREMENTS FOR IPR

A. Payment of Fees

The undersigned authorizes the Office to charge the fee required for this petition to Deposit Account No. 50-5708.

B. Grounds for Standing

Petitioner hereby certifies that the ’775 patent is available for IPR and that Petitioner is not barred or estopped from requesting IPR challenging the claims of the ’775 patent. Petitioner further certifies that the prohibitions of 35 U.S.C. §§ 315 (a)-(b) are inapplicable.

C. Statement and Relief Requested

Petitioner requests review and cancellation of the Challenged Claims:

Prior Art References
Wainner (EX1030), U.S. Publication No. 2007/0239891; filed April 6, 2006; prior art under pre-AIA 35 U.S.C. § 102(e).
Bocci (EX1031), IETF Internet Draft; published on January 11, 2006; prior art under pre-AIA 35 U.S.C. § 102(b).
Kamite (EX1035), JP Patent Application No. 2006-129359; filed November 1, 2004; published May 18, 2006; prior art under pre-AIA 35 U.S.C. § 102(a).

Ground	Claims	Description
1	1 and 6	Obvious in view of Wainner and Bocci
2	1 and 6	Obvious in view of Kamite and Bocci

IV. TECHNOLOGY BACKGROUND

A. Pseudo-Wires

At the time of the invention, in computer networks, data was typically transmitted in the form of a data packet from a source computer, through intermediary computers, to a destination computer. EX1009, 1, 6.[2] There were

[2] Exhibit citations—excluding exhibits, like patents, that designate their own paragraph and line numbers—refer to the page stamped on the bottom right of each exhibit, following the words "Juniper Exhibit."

several network "services" that could be used to send data packets across a network; for example, "Frame Relay, ATM, Ethernet, TDM, and SONET/SDH." EX1010, 1. Pseudo-wires enabled service providers to deploy a "common network" that supported multiple services. EX1003, ¶¶28-29. Essentially, pseudo-wires were connections between computers that could transmit data packets across a network—from an input computer to an output computer—regardless of the service used. EX1011, 3.

B. Multi-Segment Pseudo-Wires

Prior to the priority date of the '775 patent, it was common and well-understood that consecutive pseudo-wires could be combined to form a multi-segment—also known as multi-hop—pseudo-wire. EX1003, ¶¶30-32 (discussing EX1012-EX1014); *see* EX1031, 7 ("A MS-PW is a single PW that for technical or administrative reasons is segmented into a number of concatenated hops.").

For example, in October 2006, Luca Martini and other inventors published an Internet Draft that explained that multi-segment pseudo-wires comprised a "set of two or more continuous PW segments that behave and function as a single point-to-point PW." EX1014, 4.

Similarly, M. Bocci and S. Bryant published an Internet Draft on January 11, 2006 (further discussed in the grounds below), which defined a multi-segment pseudo-wire as "a single PW that for technical or administrative reasons is

segmented into a number of concatenated hops." EX1031, 7. Thus, it was known at the time that consecutive pseudo-wires could be combined to form a multi-segment pseudo-wire. EX1003, ¶32. Indeed, the '775 patent admits the multi-segment pseudo-wires used in the patent were known in the art. EX1001, Fig. 1 (depicting a multi-segment pseudo-wire), 5:40-42 ("FIG. **1** represents a pseudo-wire ***set up as in the prior art*** between an input router and an output router of a packet-switched network." (emphasis added)), 1:65-2:2.

C. Sharing Connections or Links in Computer Networks

Prior to the priority date of the '775 patent, it was also common and well-understood that networks could share connections or links between computers and that doing so conferred well-known benefits. *See* EX1003, ¶¶33-41 (discussing EX1015-EX1025).

For example, U.S. Patent No. 8,107,473 ("Wijnands") depicted two paths in its Figure 1: (1) from source **H1** to destination **H2** and (2) from source **H1** to destination **H3**:

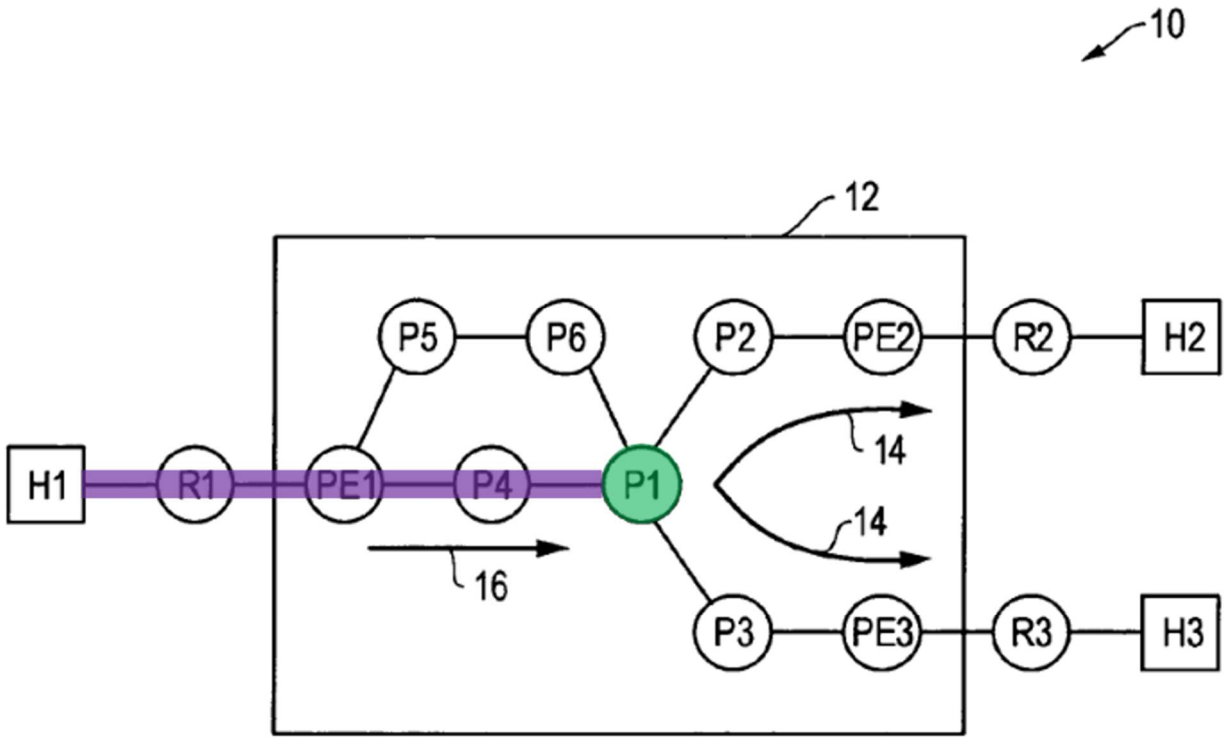

FIG. 1

EX1015, Fig. 1 (highlighted). Link **16**, highlighted in purple, is shared between these two paths such that source **H1** sends a single data packet over the shared link **16** (purple) to bifurcation point **P1** (green), and **P1** then replicates the data packet before sending it to the destinations. EX1003, ¶35, EX1015, 3:28-42, 7:42-8:3. This network setup was known in the art as a "point-to-multipoint" network. EX1015, Abstract, 2:15-19.

V. OVERVIEW OF THE '775 PATENT

A. Priority

The '775 patent was filed as U.S. Patent Application No. 12/528,083 on August 21, 2009, and is the U.S. national phase of the International Patent Application No. PCT/FR2008/050324, filed on February 26, 2008. EX1001. The '083 application claims priority to French Patent Application No. 07 53489, filed on February 26, 2007. EX1002, 160. No priority date analysis is necessary, however, because the relied-upon prior art pre-dates February 26, 2007.

B. Specification

The '775 patent is directed to "telecommunications, and more particularly packet-switched networks." EX1001, 1:24-25. The patent states that standard network protocols, at the time, could "process only packets conforming to" a specific protocol, "the Internet Protocol." *Id.*, 1:30-44. However, not all data packets conform to the Internet Protocol. EX1003, ¶43. Accordingly, "the IETF Pseudo-Wire Emulation Edge-To-Edge (PWE3) standardization group… defined a pseudo-wire concept for emulating" connections that use other services and therefore "do not conform to the Internet Protocol." EX1001, 1:45-52. Figure 2(AA) of the '775 patent depicts a pseudo-wire configuration that the patent admits was known in the prior art:

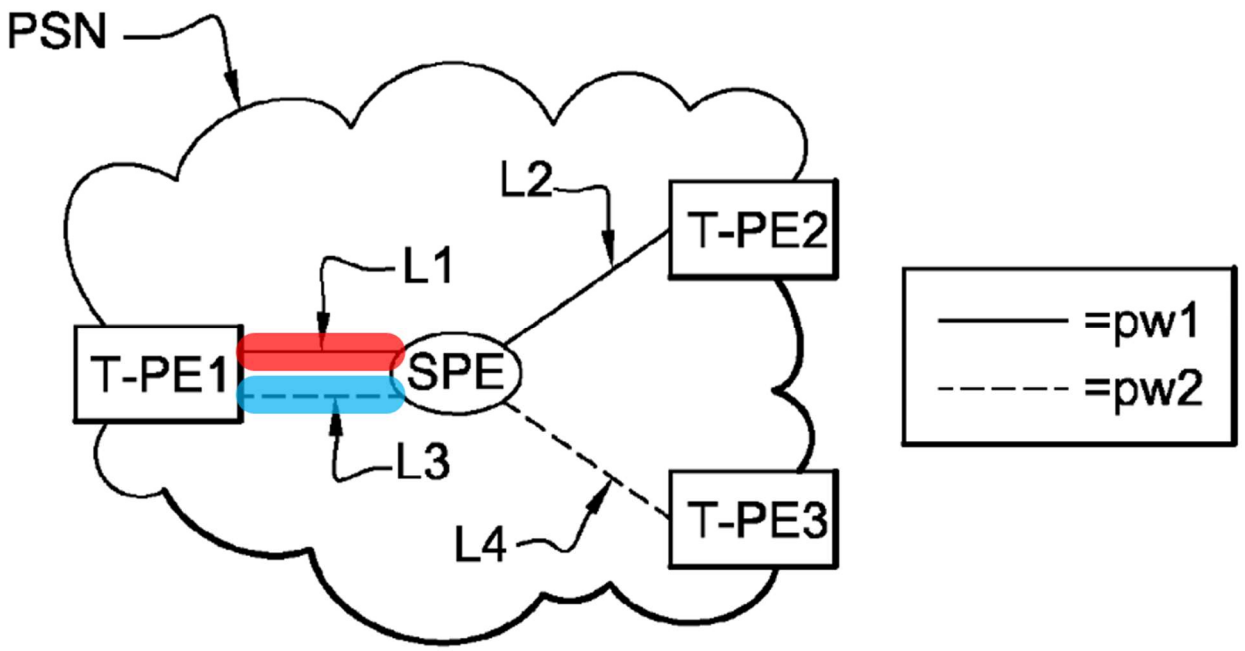

Id., Fig. 2(AA) (highlighted); *see also id.*, 3:43-44 ("FIG. **2** represents a solution ***implemented in the prior art*** to ensure continuity of service in a packet-switched network." (emphasis added)). The network in Figure 2(AA) contains two pseudo-wires. The first pseudo-wire comprises links **L1** and **L2**. *Id.*, 2:12-27. **L1** connects an input router, T-PE1, to an intermediate router, S-PE, and **L2** connects the intermediate router, S-PE, to an output router, T-PE2. *Id.* The second pseudo-wire comprises links **L3** and **L4**. *Id.* **L3** connects the input router, T-PE1, to the intermediate router, S-PE, and **L4** connects the intermediate router, S-PE, to an output router, T-PE3. *Id.* Data is typically transmitted across the first pseudo-wire to output router T-PE2, but if the input router T-PE1 detects a fault that affects this connection, it switches to transmitting the data across the second pseudo-wire to output router T-PE3. *Id.*, 2:28-39.

Relevant here, links **L1** (red) and **L3** (blue) are separate, even though they (1) connect the same input router to the same intermediate router and (2) transmit the same data in the event of a fault. EX1003, ¶44. The '775 specification asserts that this prior-art configuration was standard because a "person skilled in the art has always considered a pseudo-wire as a ***point-to-point*** link set up between an input router and an output router." EX1001, 3:9-11 (emphasis added). The '775 patent proposes combining links **L1** (red) and **L3** (blue) into a single shared link, depicted in Figure 3 and highlighted in purple—essentially turning the "point-to-point" pseudo-wires into a well-known point-to-multipoint network, described above, (*see* §IV.C):

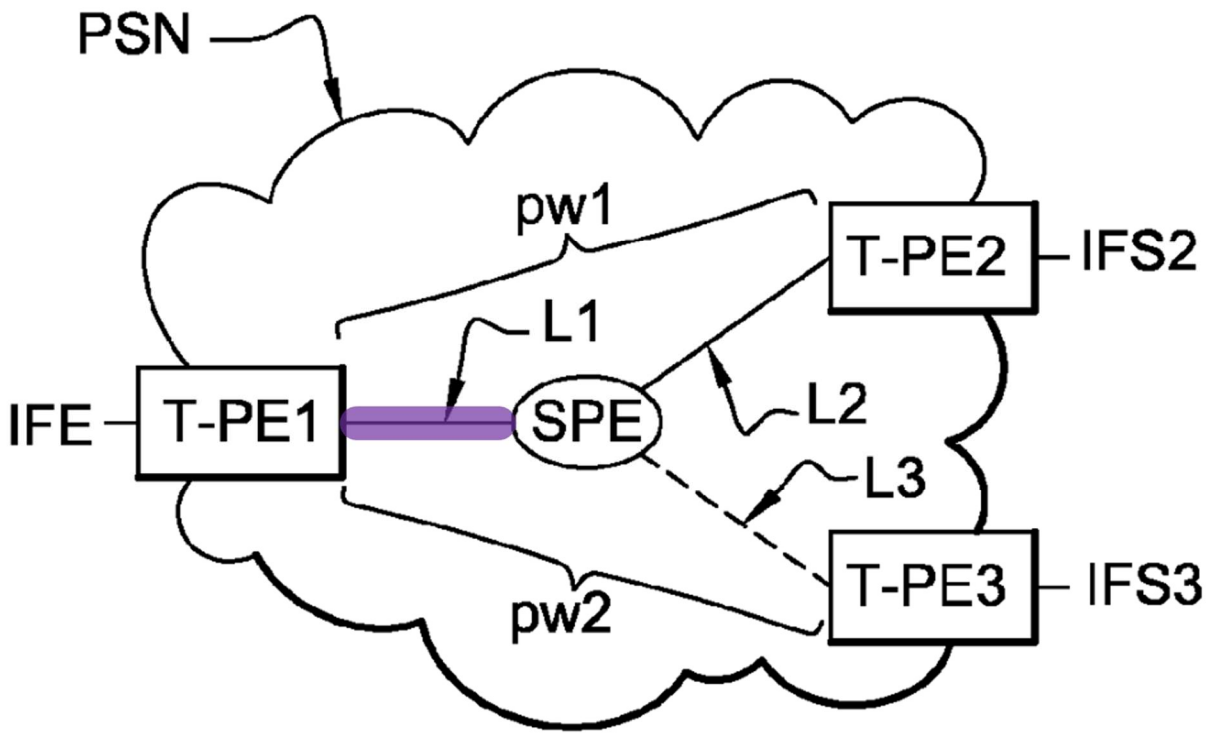

EX1001, Fig. 3 (highlighted); *see also id.*, 5:45-46 ("FIG. **3** represents two pseudo-wires ***set up by the method of an embodiment of the invention***." (emphasis added)). The majority of claims 1 and 6 describe the prior-art embodiment disclosed in Figure 2(AA); only the last 11 words of those claims describe the purported invention: "said first link being shared by the first and second pseudo-wires." *Id.*, 12:14-27, 13:12-29.

C. Applicant Admitted Prior Art

The majority of the technology claimed by the '775 patent is applicant admitted prior art ("AAPA"), and the only "invention" over the prior art is sharing a first link between a first and second pseudo-wire. EX1003, ¶45.

The applicant admitted that the general network configuration that the '775 patent uses throughout its claims was known in the prior art. EX1003, ¶46. The '775 patent explains that "FIG. 2 represents a solution implemented in the prior art to ensure continuity of service in a packet-switched network." EX1001, 5:43-44. Figure 2(AA) depicts the following network:

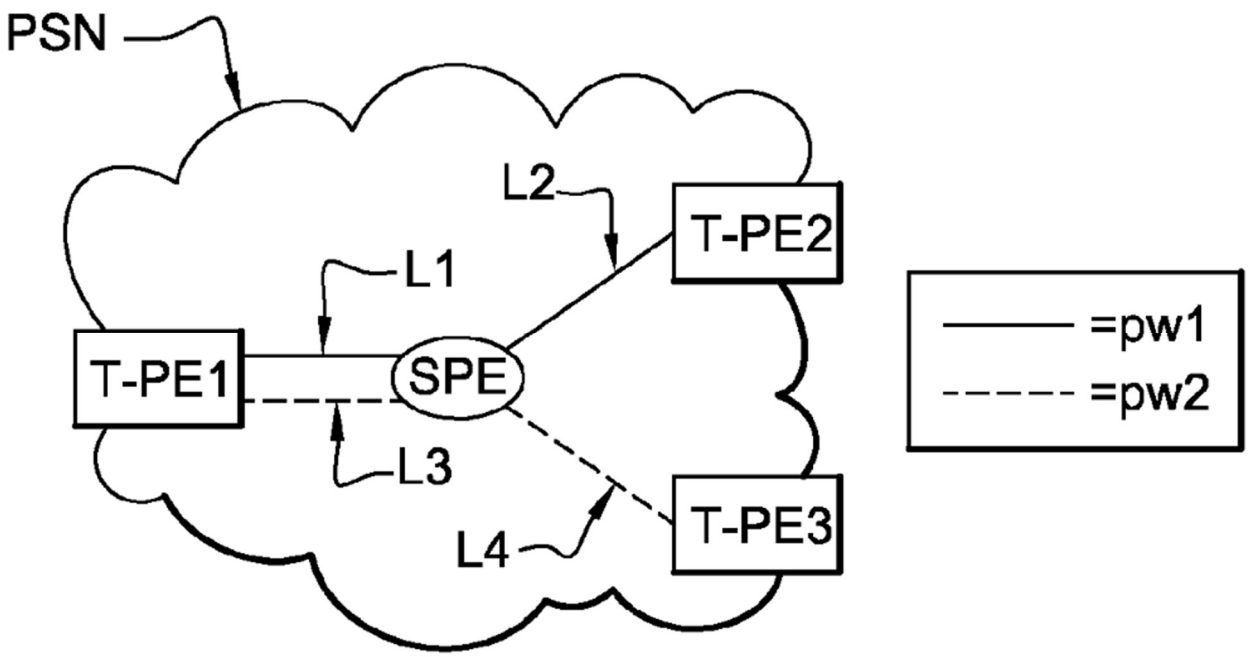

Id., Fig. 2(AA). The purported "invention" described in claims 1 and 6 of the '775 patent is depicted in Figure 3:

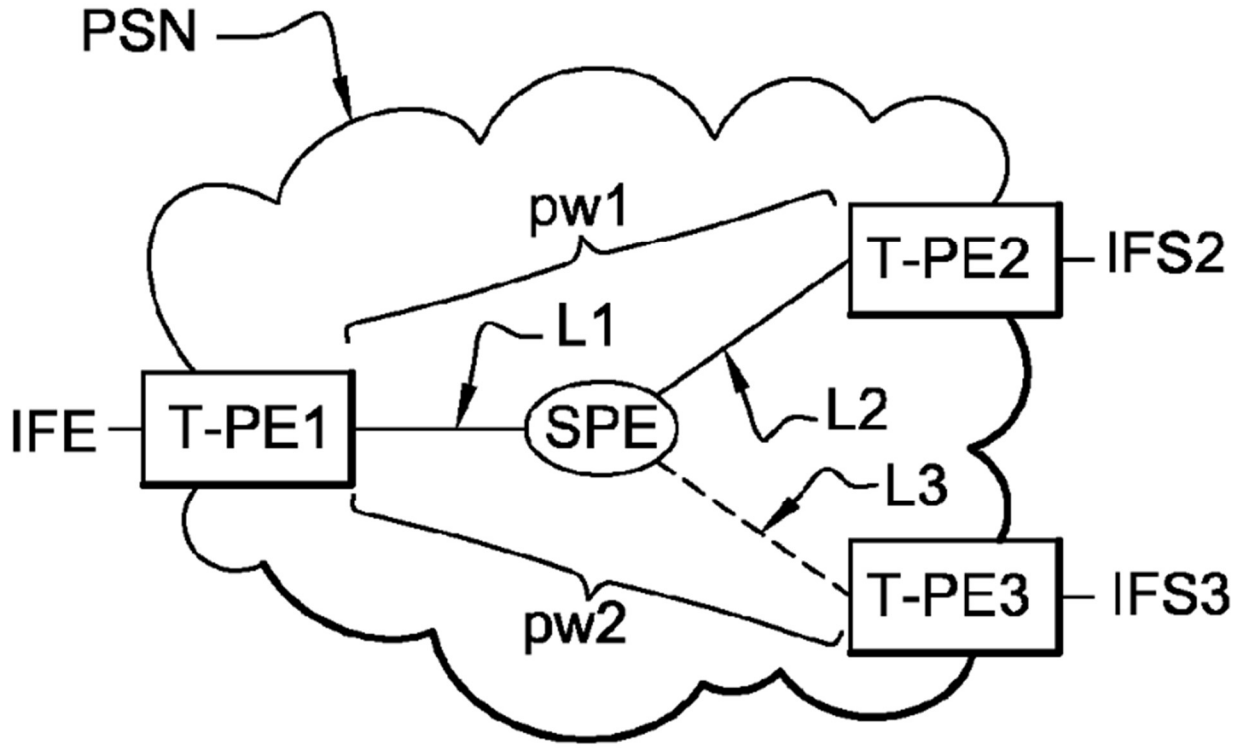

Id., Fig. 3. As these figures show, the only difference between the "invention" and the admitted prior art is that links **L1** and **L3** in the prior art (Figure 2(AA)) are combined to form a shared link **L1** in the invention (Figure 3):

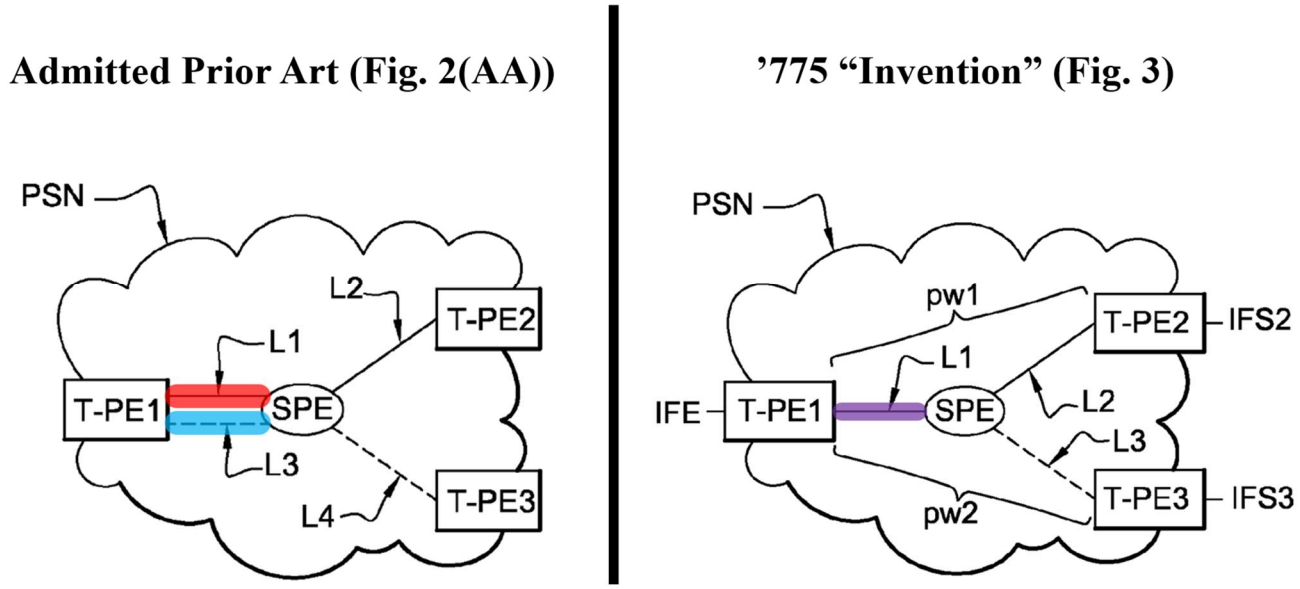

Id., Figs. 2(AA) & 3 (highlighted and annotated).

Thus, the only "advance" in the '775 claims—which, as discussed below, was already known in the prior art—was sharing a first link between the two pseudo-wires. *Id.*, 12:14-27; EX1003, ¶47.

D. Original Prosecution

The Examiner issued only one rejection, on June 17, 2011. EX1002, 91. In it, the Examiner identified two prior-art rejections under 35 U.S.C. § 102. First, the Examiner determined that U.S. Publication No. 2008/0175234 ("Li") anticipated claims 1-5 and 8-9. *Id.*, 97-102. Second, the Examiner determined that U.S. Publication No. 2008/0089227 ("Guichard") anticipated claims 6-7. *Id.*, 102-05.

On September 19, 2011, the applicant filed remarks asserting that Li and Guichard did not teach the "invention" of the application—*i.e.*, sharing a segment of a pseudo-wire. *Id.*, 84-87.

On December 30, 2011, the Examiner agreed and allowed claims 1-9, asserting that no prior art reference disclosed sharing a link between a first and second pseudo-wire. *Id.*, 56, 66-67.

E. Patent Office Proceedings

On July 6, 2020, Cisco Systems, Inc. filed a petition for IPR challenging claims 1 and 6 of the '775 patent. EX1026; *see Cisco Sys., Inc. v. Monarch Networking Sols. LLC*, IPR2020-01226, (PTAB July 6, 2020). On March 4, 2021, the Board exercised its discretion under 35 U.S.C. §314(a) to deny the petition because the co-pending district court litigation was in an advanced stage and "the parties already ha[d] invested significantly in the Eastern District of Texas litigation." EX1028, 13. The Board did not analyze the merits of the petition.

On March 12, 2021, Cisco filed an *ex parte* reexamination challenging claims 1 and 6 of the '775 patent. EX1008, 252. On July 30, 2021, the Examiner issued an Office action concluding that claims 1 and 6 would have been obvious over U.S. Patent No. 7,602,702 ("Aggarwal") and a book on packet-switched networks ("Hussain"). *Id.*, 112-47.

On September 30, 2021, the applicant responded, asserting that neither Aggarwal nor Hussain disclose sharing a first link between two pseudo-wires. *Id.*, 45. In particular, the applicant argued that Aggarwal "does not mention or discuss pseudo-wires at all" and is "exclusively focused on using MPLS to route IP traffic across IP networks" whereas pseudo-wires have "the ability to route non-IP traffic across a PSN." *Id.*, 63 (emphasis in original). The applicant particularly focused on the '775 patent's network configuration, arguing that Aggarwal "does not teach the shared link 'single-stem Y' configuration shown" in the '775 patent, (*id.*, 65):

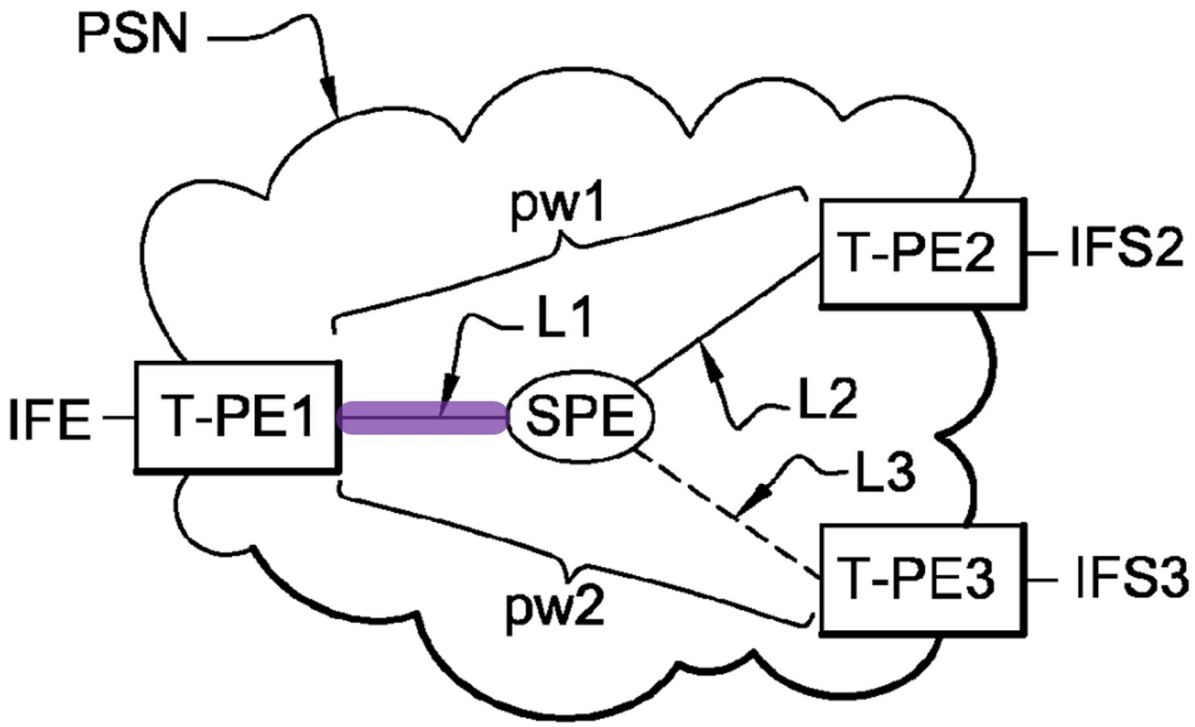

EX1001, Fig. 3 (highlighted). The applicant argued that Hussain also did not teach sharing links because "Hussain's PWs are separate from one another." EX1008, 66.

On November 15, 2021, the Examiner withdrew the rejection of claims 1 and 6. *Id.*, 8-9. The prosecution history thus makes clear that the limitation allegedly missing from the prior art was the shared "link" between two pseudo-wires. But as discussed in this petition, sharing a link between two pseudo-wires was known in the prior art.

VI. LEVEL OF ORDINARY SKILL IN THE ART

A person of ordinary skill in the art ("POSITA") in February 2007 would have had a Bachelor of Science degree in electrical engineering, computer engineering, computer science, or a related subject, and three years of work experience in computer networking or a related field. EX1003, ¶¶48-50. Lack of professional experience can be remedied by additional education, and vice versa. *Id.*

VII. CLAIM CONSTRUCTION

The parties have not yet submitted claim construction proposals in the co-pending district court litigation between Patent Owner and Petitioner. However, in a prior district court litigation brought by Patent Owner, a single term of the '775 patent was construed by the Eastern District of Texas court as follows:

Claim(s)	Term	Construction
1-7	"link"	"connection between an interface of a first router and an interface of a second router"

EX1029, 33-38. Patent Owner advocated for a nearly identical construction during EPR, asserting that "the term 'link' should be construed to mean 'a connection

between an interface on a first device and an interface on a second device.'" EX1008, 69. Petitioner applies the Eastern District of Texas court's construction for the purposes of this petition and also addresses the similar construction that Patent Owner proposed during EPR. Petitioner does not believe any other terms require construction, particularly because the prior art relied upon in this petition maps directly onto embodiments disclosed in the '775 patent. *See Nidec Motor Corp. v. Zhongshan Broad Ocean Motor Co.*, 868 F.3d 1013, 1017 (Fed. Cir. 2017).

VIII. GROUNDS

A. Ground 1: Claims 1 and 6 Would Have Been Obvious in View of Wainner and Bocci

1. Wainner (EX1030)

U.S. Publication No. 2007/0239891 ("Wainner") is prior art under at least pre-AIA § 102(e) because its April 6, 2006 filing date is earlier than the February 26, 2007 priority date of the '775 patent. *See* §V.A.

Wainner explains that prior-art methods of routing data to multiple output hosts are inefficient and "scalability is constrained by bandwidth efficiency or operational complexity." EX1030, ¶1. "Embodiments of the invention significantly overcome such deficiencies" by implementing "point-to-multipoint distribution using pseudowires." *Id.*, ¶5. One embodiment of Wainner's invention is depicted in its Figure 2:

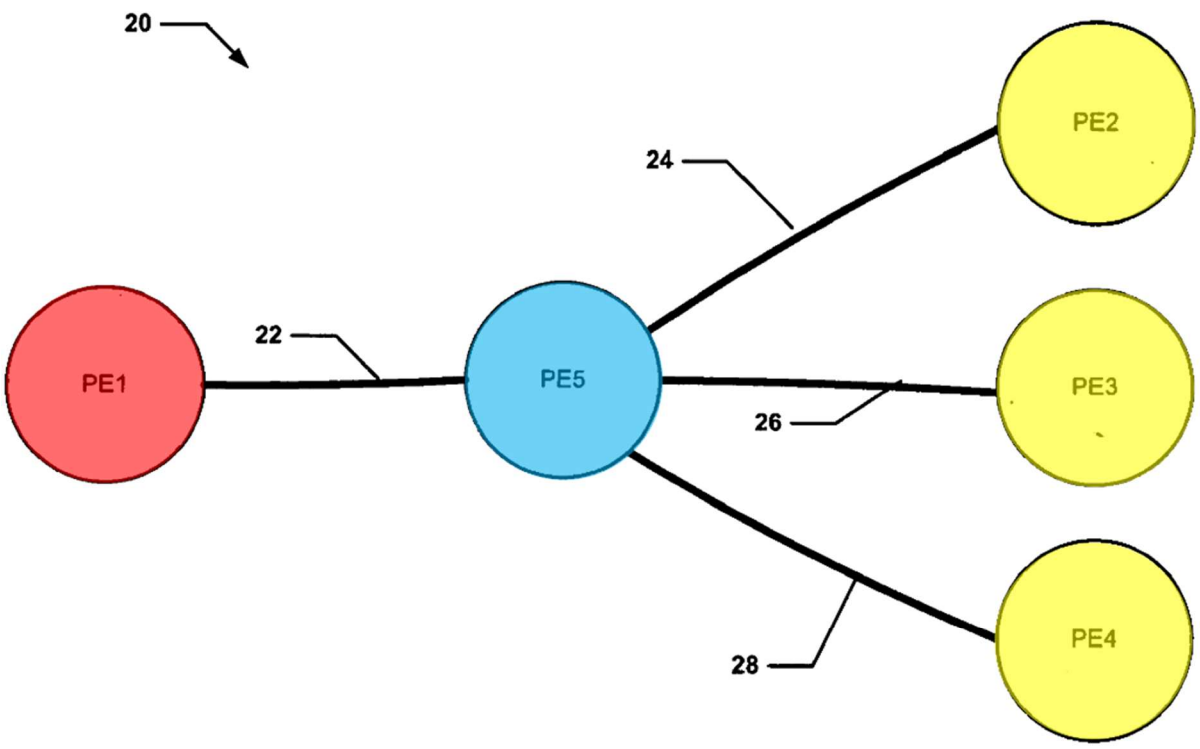

FIGURE 2

Id., Fig. 2 (highlighted). In this embodiment, an origination provider edge (PE1, red) routes data packets over a pseudo-wire **22**[3] to a switching provider edge (PE5, blue). *Id.*, ¶¶23-24, 28-33. The switching provider edge then replicates the data packets before routing the replicated data packets to the receiving provider edges (PE2, PE3, and PE4, yellow) over the respective pseudo-wires **24**, **26**, and **28**. *Id.*

[3] Wainner refers to each segment as a pseudo-wire—for example, pseudo-wires 22 and 26—and a POSITA would have known that these pseudo-wires are pseudo-wire segments that form a multi-hop pseudo-wire. EX1003, n.3.

Sequential pseudo-wire segments—for example, pseudo-wires **22** and **24**—combine to form "multi-hop/multi-point pseudowires." *Id.*, ¶20 ("This model statically binds an upstream PW to one or more downstream PW" to form "multi-hop/multi-point pseudowires."). Wainner's network configuration therefore shares a link (*e.g.*, pseudo-wire **22**) between the origination provider edge (red) and the switching provider edge (blue), reducing redundant data transfers. EX1003, ¶52.

Indeed, Wainner explains that "[b]y way of the present environment **20**, the transport provider is able to specify the location of [switching provider edge(s)] branchpoints in order to ***conserve bandwidth and provide optimal utilization of the system***." *Compare* EX1030, ¶24 (emphasis added), *with* EX1001, 3:1-2 ("This optimizes the use of network resources, for example bandwidth."). Like the '775 patent, Wainner explains that its point-to-multipoint approach "deviates from previous L2VPN concepts that define a ***point-to-point*** PW." *Compare* EX1030, ¶20, *with* EX1001, 3:9-11 (A "person skilled in the art has always considered a pseudo-wire as a ***point-to-point*** link set up between an input router and an output router." (emphasis added)); *see* EX1003, ¶53.

2. Bocci (EX1031)

Bocci (EX1031) is an Internet Engineering Task Force ("IETF") Internet Draft entitled "An Architecture for Multi-Segment Pseudo Wire Emulation Edge-to-Edge," published on January 11, 2006. Exhibit 1031 is an authentic copy of Bocci

that was publicly accessible at least by January 11, 2006, and Bocci would have been sufficiently accessible to POSITAs. EX1007, ¶10; EX1005, ¶¶21-25. EX1003, ¶¶54-57. Indeed, the '775 patent cites to Bocci in its "Other Publications" section. EX1001, Cover Page. Bocci is therefore prior art under at least pre-AIA § 102(b) because it was described in a printed publication more than one year prior to the '775 patent's priority date.

Bocci "describes an architecture for extending pseudo wire emulation across multiple packet switched network segments." EX1031, 2. "It presents an architectural framework for such multi-segment pseudo wires, defines terminology, and specifies the various protocol elements and their functions." *Id.* Bocci sometimes refers to pseudo-wires as "PWs," multi-segment pseudo-wires as "MS-PWs," and single-segment pseudo-wires as "SS-PWs." *Id.*, 3, 6. EX1003, ¶58.

At the time, networks consisting of multiple nodes contained a pseudo-wire between each node "via a single, direct tunnel." EX1031, 4. Bocci proposed concatenating these pseudo-wires to form a "multi-segment PW." *Id.* Bocci explains that a multi-segment pseudo-wire comprises a "set of two or more contiguous ***PW segments*** that behave and function as a single point-to-point PW." *Id.*, 6 (emphasis added). The resulting multi-segment pseudo-wire "is a single PW" that "is indistinguishable from a SS-PW," *i.e.*, a single-segment pseudo-wire. *Id.*, 7.

Thus, Bocci teaches combining consecutive pseudo-wires to form a multi-segment pseudo-wire. EX1003, ¶59.

3. The Wainner-Bocci Combination

In the Wainner-Bocci combination, Wainner discloses the entirety of claims 1 and 6—in particular, setting up two pseudo-wires that share a first link. EX1003, ¶60. However, Patent Owner previously argued—in a case that Patent Owner brought against Cisco Systems, Inc.—that Wainner does not disclose multi-segment pseudo-wires and accordingly does not disclose "two pseudo-wires traversing" the first link. EX1032, 4-6. Wainner does disclose these elements, as shown in the analysis below. EX1003, ¶60. Additionally, Bocci would have supplemented Wainner's disclosures and further taught combining consecutive pseudo-wire segments into a multi-segment pseudo-wire. *Id.* Thus, in the Wainner-Bocci combination, Wainner would operate in its disclosed manner and, to the extent necessary, implement Bocci's teaching of combining consecutive pseudo-wires to form a multi-segment pseudo-wire. *Id.*

4. Motivations to Combine Wainner and Bocci

A POSITA would have been motivated to combine the teachings of Wainner and Bocci and would have had a reasonable expectation of success of doing so. EX1003, ¶61.

First, the prior art contained teachings, suggestions, and motivations that would have led a POSITA to combine Wainner and Bocci. *Id.*, ¶62. Wainner itself explains that it teaches a "particular embodiment of a method for providing point-to-multipoint multihop distribution using Pseudowires (PWs)" that avoids scalability problems. EX1030, ¶6. A POSITA would have therefore been motivated to search for references, like Bocci, that describe the technical process of combining consecutive pseudo-wires to form a multi-segment (also known as a "multi-hop") pseudo-wire in order to implement Wainner's teachings. EX1003, ¶62. In fact, Bocci—like Wainner—explains that implementing multi-segment pseudo-wires provides scalability benefits. *See* EX1031, 3-4. Bocci's teachings are applicable to a variety of network configurations. *See id.*, 3, 8-11. Thus, both Wainner and Bocci contain teachings, suggestions, and motivations to combine the references together. EX1003, ¶62. A POSITA would have had a reasonable expectation of success in combining Wainner and Bocci because Bocci extensively describes the process and technical details of how to combine consecutive pseudo-wires to form a multi-segment pseudo-wire. *Id.*; *see generally* EX1031.

Second, the Wainner-Bocci combination would have involved merely combining prior art elements according to known methods to yield predictable results. EX1003, ¶63. As shown in the analysis below, Wainner and Bocci include each element in claims 1 and 6. *Id.* A POSITA could have combined the elements

as claimed by known methods. *Id.* In fact, Bocci describes in detail how to combine consecutive pseudo-wires to form a multi-segment pseudo-wire, and explains that its teachings are applicable to a variety of network configurations. *E.g.*, EX1031, 8-11. Thus, the combination merely would have involved applying the teachings of Bocci to the particular network configuration described in Wainner. EX1003, ¶63. A POSITA would have recognized that the results of the combination were predictable, especially because Bocci extensively describes the process and technical details of how to implement its teachings on networks that implement pseudo-wires. *Id.*

Third, the combination would have involved the use of a known technique to improve similar devices in the same way. *Id.*, ¶64. Wainner contains a base device—*i.e.*, the network described in Wainner and depicted in Wainner's Figure 2. *Id.* Bocci contains a comparable device—*i.e.*, the networks described throughout Bocci and particularly the network configuration depicted in Bocci's Figures 3 and 4—that has been improved in the same way as the claimed invention. *Id.* Specifically, Bocci discloses combining consecutive pseudo-wires into multi-segment pseudo-wires. *See* EX1031, 3-4. A POSITA could have applied the known improvement—*i.e.*, Bocci's teaching of combining consecutive pseudo-wires to form a multi-segment pseudo-wire—in the same way to the base device—*i.e.*, Wainner's network configuration. EX1003, ¶64. Indeed, Bocci describes in detail

how to combine consecutive pseudo-wires to form a multi-segment pseudo-wire, and explains that its teachings are applicable to a variety of network configurations. *E.g.*, EX1031, 8-11. The results would have been predictable to a POSITA, especially because Bocci extensively describes the process and technical details of how to implement its teachings on networks that implement pseudo-wires. EX1003, ¶64.

Fourth, the combination would have involved applying a known technique to a known device ready for improvement to yield predictable results. *Id.*, ¶65. Wainner contains a base device—*i.e.*, the network configuration described in Wainner and depicted in Wainner's Figure 2. *Id.* Bocci discloses a known technique that is applicable to the base device. *Id.* Specifically, Bocci discloses combining consecutive pseudo-wires into multi-segment pseudo-wires. *See* EX1031, 3-4. A POSITA would have known that Bocci's teachings are generally applicable to networks that deploy consecutive pseudo-wires. EX1003, ¶65. A POSITA would have recognized that applying the known technique—*i.e.*, Bocci's teaching of combining consecutive pseudo-wires to form a multi-segment pseudo-wire—would have yielded predictable results and resulted in an improved system. *Id.* Indeed, Bocci extensively describes the process and technical details of how to implement its teachings on networks that implement pseudo-wires. *Id.*

Finally, Wainner, Bocci, and the '775 patent are analogous art because the references are in the same field of endeavor as each other—routing data via pseudo-wires and improvements to pseudo-wire configurations. *Id.*, ¶66; EX1001, 3:15-29, 1:53-2:2; EX1030, ¶24; EX1031, 2.

5. Claim 1

(a) 1[pre]: A method of setting up at least two pseudo-wires able to broadcast a data stream, comprising:

To the extent the preamble is limiting, Wainner and Bocci would have rendered obvious 1[pre]: "A method of setting up at least two pseudo-wires [*e.g.*, **in Figure 2, a first pseudo-wire comprising links 22 and 24 and a second pseudo-wire comprising links 22 and 28**] able to broadcast a data stream, comprising:". EX1003, ¶¶67-76.

Wainner explains that it uses at least two pseudo-wires to broadcast a data stream. EX1030, ¶6 ("In a particular embodiment of a method for providing point-to-multipoint multihop distribution ***using Pseudowires*** (PWs), the method includes ***receiving data***…" (emphases added)). The data in Wainner corresponds to the '775 patent's data stream. EX1003, ¶68. The '775 patent explains that a data stream is merely "the packets for transmission." EX1001, 1:30-33. Similarly, Wainner discloses transmitting data packets. *See, e.g.*, EX1030, ¶¶19, 24.

Thus, Wainner discloses (and depicts, in Figure 2) setting up a first pseudo-wire comprising links **22** and **24**, and a second pseudo-wire comprising links **22** and

28 to route data across a network. EX1003, ¶69; EX1030, ¶20 ("This model statically binds an upstream PW to one or more downstream PW" to form "multi-hop/multi-point pseudowires.").

Indeed, Wainner's network configuration is nearly identical to the configuration described in the '775 patent. EX1003, ¶70. For example, Wainner depicts a first router (red) that routes a data packet over a shared link **22** to an intermediate router (blue), which then routes the data packet over separate links **24**, **26**, and **28** to each output router (yellow):

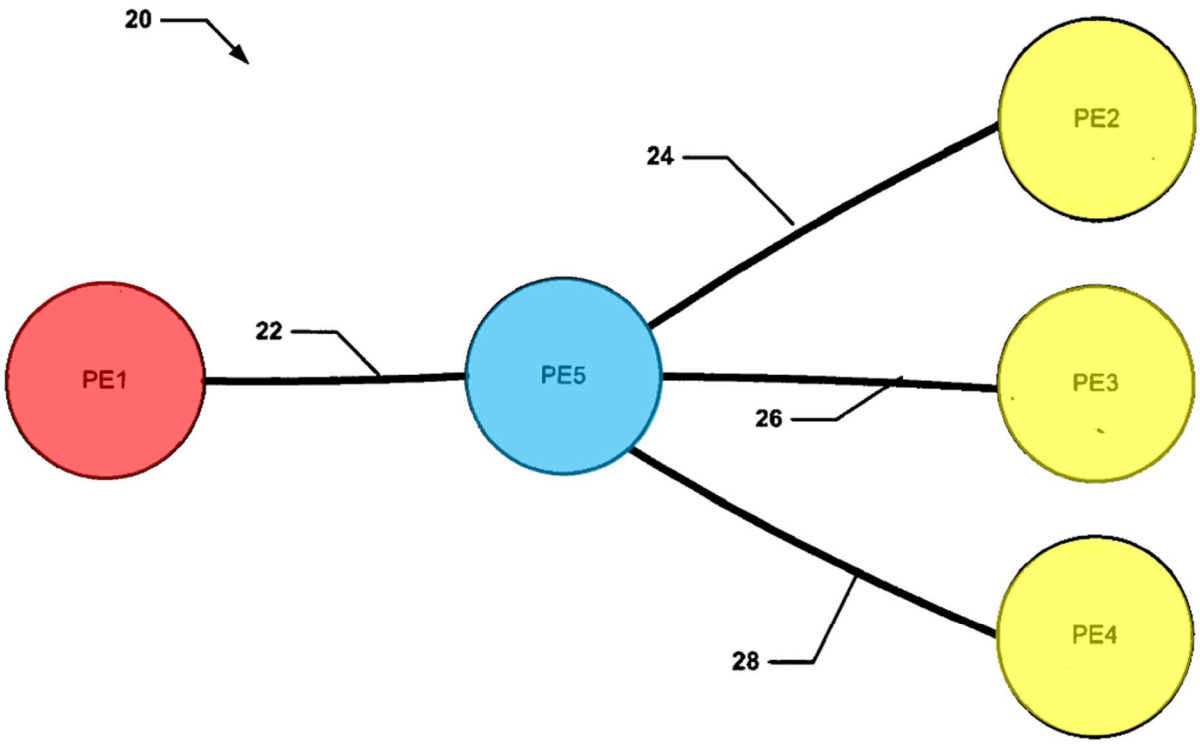

FIGURE 2

EX1030, Fig. 2; *see also* EX1030, ¶¶23-24, 28-33.

Identically, the ’775 patent depicts a first router (red) that routes a data packet over a shared link **L1** to an intermediate router (blue), which then routes the data packet over separate links **L2** and **L3** to each output router (yellow):

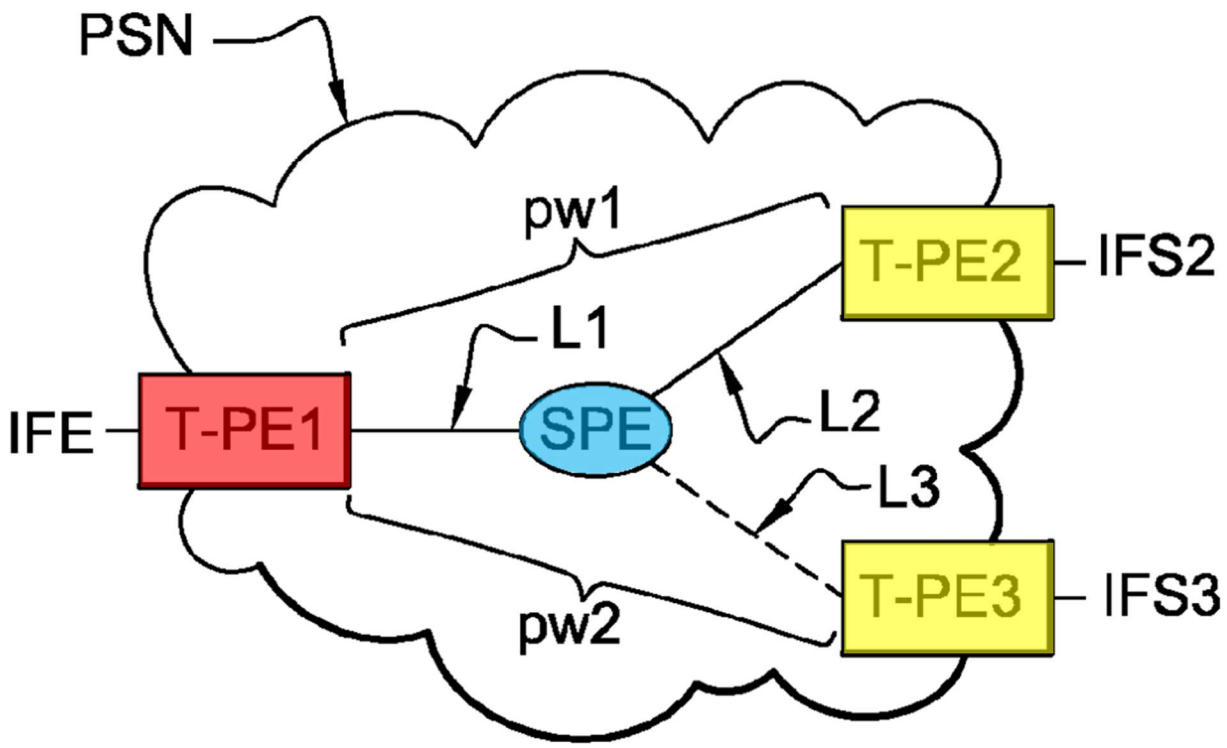

EX1001, Fig. 3 (highlighted); EX1003, ¶71; *see also* EX1001, 6:25-48.

In a past proceeding that Patent Owner brought against a third party, Cisco Systems, Inc., Patent Owner appears to have argued that Wainner does not anticipate the ’775 patent because Wainner discloses one point-to-multipoint pseudo-wire rather than multiple point-to-point pseudo-wires that share a first link. EX1032, ¶782.

This is wrong. EX1003, ¶¶73-75. First, Wainner discloses two point-to-point pseudo-wires that share a first link. EX1003, ¶73. Wainner explains that it employs

a "model [that] statically binds an upstream PW to ***one or more*** downstream PW." EX1030, ¶20 (emphasis added). In other words, Wainner teaches creating multiple multi-hop (*i.e.*, multi-segment) pseudo-wires that share a first upstream pseudo-wire (*i.e.*, first link). EX1003, ¶73. For example—as discussed further below with respect to the appropriate limitations—upstream pseudo-wire **22** is bound to downstream pseudo-wire **24** to form the '775 patent's "first pseudo-wire" in limitation 1[a] and upstream pseudo-wire **22** is further bound to downstream pseudo-wire **28** to form the '775 patent's "second pseudo-wire" in limitation 1[b]. *Id.*

Second, at the very least Wainner in combination with Bocci would have rendered obvious two point-to-point pseudo-wires that share a first link. *Id.*, ¶74. In this combination, Wainner's Figure 2 depicts four pseudo-wire segments, the first of which—pseudo-wire **22**—is shared between the other three—pseudo-wires **24**, **26**, and **28**. EX1030, ¶20; *see* EX1030, Fig. 2. As discussed in further detail below, Bocci teaches combining consecutive pseudo-wire segments to form a multi-segment point-to-point pseudo-wire. *E.g.*, EX1031, 4 ("This requires a capability in PE2 that can concatenate PW segments PE1-PE2 to PW segments PE2-PE3. The end-to-end PW is known as a multi-segment PW."). A POSITA would have found it obvious to use Bocci's teachings to combine pseudo-wire **22** in Wainner with downstream pseudo-wire **24** to form the '775 patent's "first pseudo-wire" in limitation 1[a] and further combine upstream pseudo-wire **22** with downstream

pseudo-wire **28** to form the '775 patent's "second pseudo-wire" in limitation 1[b]. EX1003, ¶74.

Third, Patent Owner itself has asserted that the '775 patent encompasses point-to-multipoint pseudo-wires. EX1003, ¶75. In Patent Owner's previous litigation with Cisco, Patent Owner accused Cisco of infringing the '775 patent because the accused product "implements Label Switched ***Multicast*** with ***point-to-multipoint*** traffic engineering (P2MP-TE) for delivering broadcast, ***multicast*** and certain unicast streams to a VPLS domain using pseudo-wires." EX1033, ¶123 (emphasis added). Patent Owner again insisted that the Cisco product infringed because it "provides ***point to multipoint*** (P2MP) communication over IP or MPLS networks . . . by connecting nodes through P2MP Pseudo-wires." *Id.*, ¶127 (emphasis added). Similarly, Wainner discloses "[a] method, apparatus and computer program product for providing ***point-to-multipoint*** multihop distribution using Pseudowires (PWs) is presented." EX1030, Abstract (emphasis added). Wainner further explains that it employs "an architecture that uses multi-hop/***multi-point pseudowires***." *Id.*, ¶20 (emphasis added). Under Patent Owner's infringement allegations, sharing a first link between two point-to-point pseudo-wires is functionally identical to implementing a point-to-multipoint pseudo-wire. EX1003, ¶75. There is no technical distinction between the two; describing an implementation as "two point-to-point pseudo-wires that 'share' a same link" is

equivalent to "point-to-multipoint pseudo-wires" in which common segments are shared such that data is not duplicated. *Id.* Patent Owner should not be allowed to interpret the '775 patent one way for purposes of infringement and another way for purposes of invalidity.

Thus, Wainner and Bocci would have rendered obvious limitation 1[pre]. EX1003, ¶76.[4]

(b) <u>1[a]: setting up a first pseudo-wire comprising a first link set up between an input router of a packet-switched network and an intermediate router of the packet-switched network and a second link set up between said intermediate router and a first output router of the packet-switched network; and</u>

Wainner and Bocci would have rendered obvious limitation 1[a]: "setting up a first pseudo-wire comprising a first link [*e.g.*, **pseudo-wire 22**] set up between an input router [*e.g.*, **PE1**] of a packet-switched network [*e.g.*, **network depicted in Figure 2**] and an intermediate router [*e.g.*, **PE5**] of the packet-switched network and

[4] As briefly indicated above, Patent Owner also argued with respect to limitation 1[pre] that Wainner does not teach combining its pseudo-wire links into multi-segment pseudo-wires. *See* EX1032, 4-6. Patent Owner's assertion is wrong and is better addressed in the analysis for limitation 1[a]. Petitioner therefore explains in §VIII.A.5(b) that Wainner and—at the very least—Wainner in combination with Bocci teach multi-segment pseudo-wires.

a second link [*e.g.*, **pseudo-wire 24**] set up between said intermediate router [*e.g.*, **PE5**] and a first output router [*e.g.*, **PE2**] of the packet-switched network." EX1003, ¶¶77-90.

To start, the '775 patent admits that limitation 1[a] was known in the art. EX1003, ¶89; *see* §V.C. For example, the '775 patent explains that "FIG. 2 represents a solution implemented in the prior art to ensure continuity of service in a packet-switched network." EX1001, 5:43-44. Figure 2 depicts "setting up a first pseudo-wire [*e.g.*, **pw1**] comprising a first link [*e.g.*, **L1**] set up between an input router [*e.g.*, **T-PE1**] of a packet-switched network [*e.g.*, **PSN**] and an intermediate router [*e.g.*, **SPE**] of the packet-switched network and a second link [*e.g.*, **L2**] set up between said intermediate router [*e.g.*, **SPE**] and a first output router [*e.g.*, **T-PE2**] of the packet-switched network":

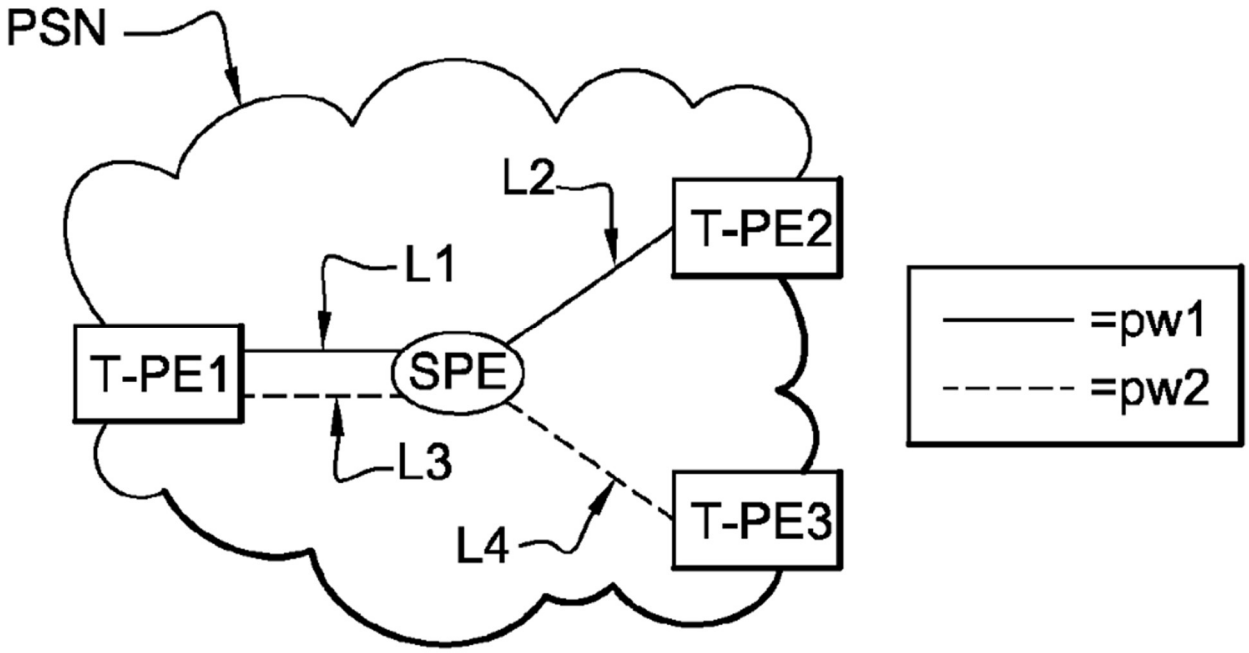

Id., Fig. 2(AA). Thus, limitation 1[a], as the '775 patent admits, was known and implemented in the prior art. EX1003, ¶89.

Additionally, Wainner and Bocci disclose this limitation. *Id.*, ¶78. The elements of this limitation are broken down below:

setting up a first pseudo-wire comprising a first link set up between an input router of a packet-switched network and an intermediate router of the packet-switched network. The '775 patent depicts the following network configuration that comprises an input router (red) and an intermediate router (blue):

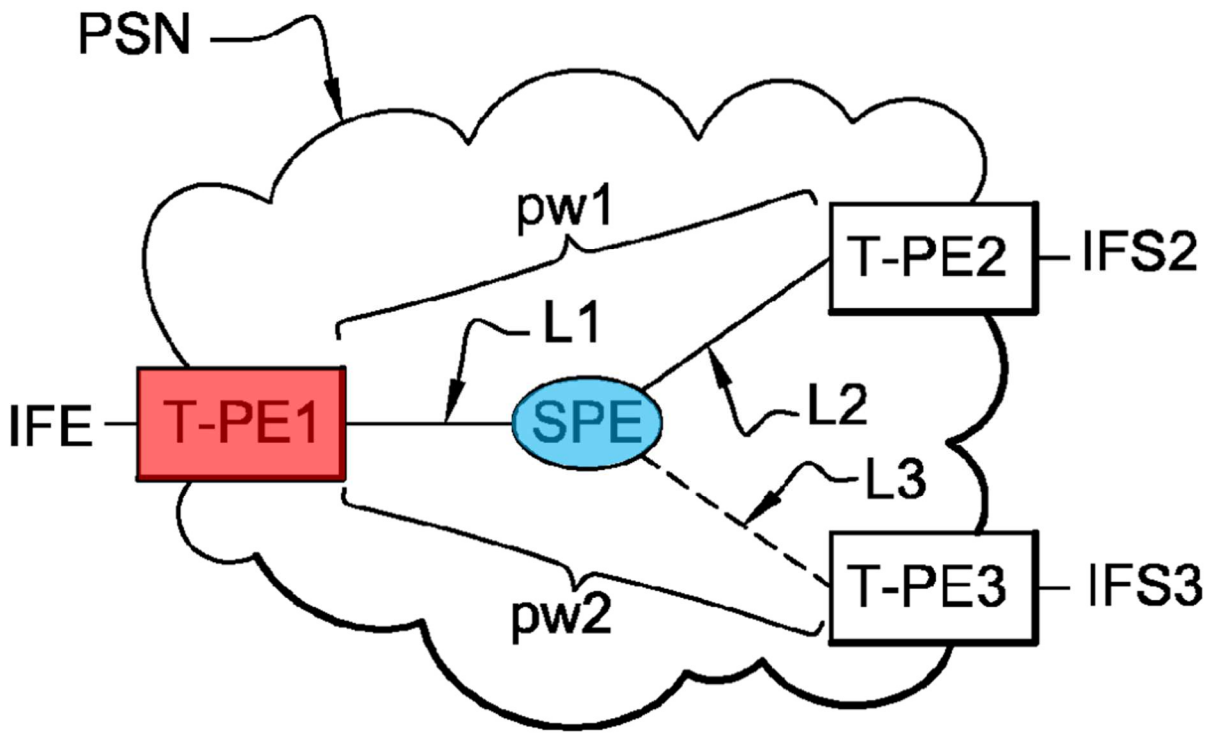

EX1001, Fig. 3 (highlighted). Similarly, Wainner discloses a network configuration that comprises an origination provider edge router (red) and a switching provider edge router (blue):

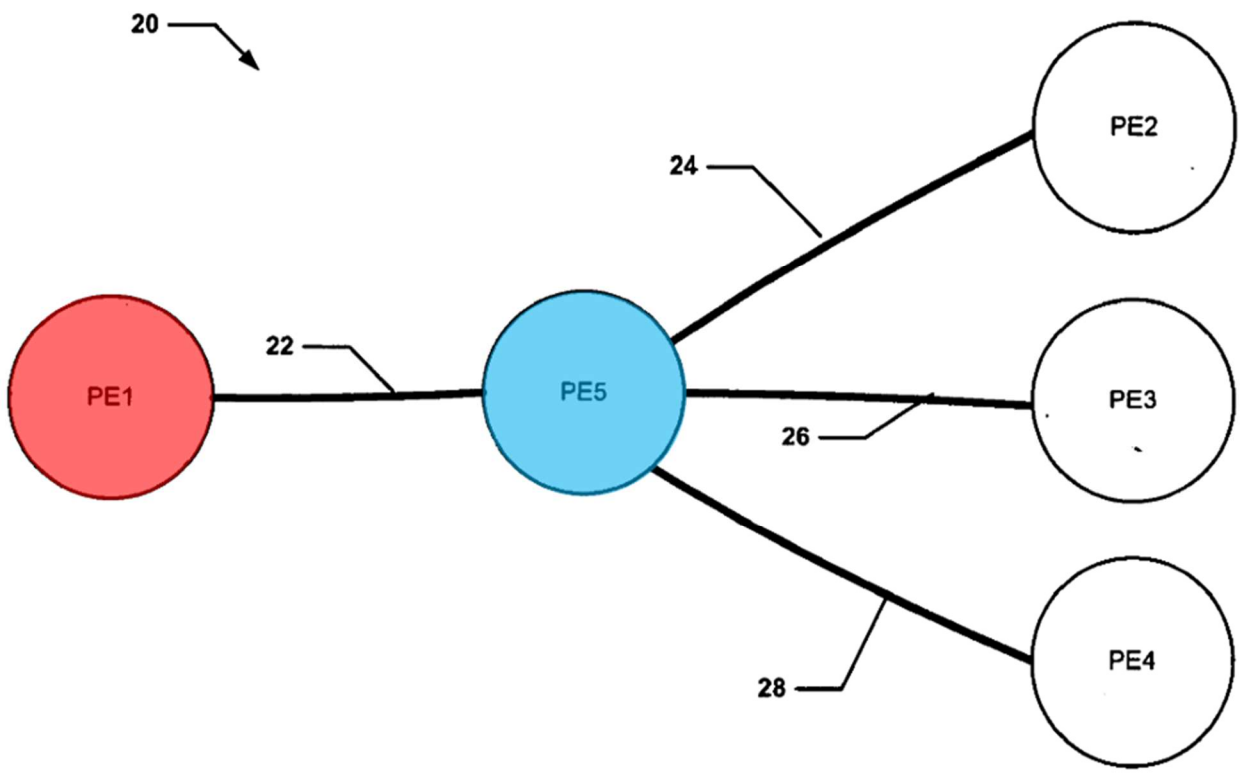

EX1030, Fig. 2 (highlighted). As the coloring in the above figures shows, (1) Wainner's origination provider edge router corresponds to the '775 patent's input router and (2) Wainner's switching provider edge router corresponds to the '775 patent's intermediate router. EX1003, ¶79. A POSITA would have known that the routers in Wainner and the routers in the '775 patent are both standard routers used in computer networking. *Id.*

The network in Wainner corresponds to the '775 patent's packet-switched network. *Id.*, ¶80. In particular, both networks transmit data in the form of packets. *Compare* EX1030, ¶19 ("Packets received by PE**1** from another network device (not shown) may be forwarded to one or more of PE**2**, PE**3** and PE**4**, known as multicasting."), *with* EX1001, 1:30-32 ("In a packet-switched network, data is

transmitted in the form of packets processed by routers of the network until they reach their destination.”).

Further, Wainner’s pseudo-wire **22** (purple) corresponds to the ’775 patent’s “first link” **L1** (purple) that is set up between the input router and intermediate router. EX1003, ¶81.

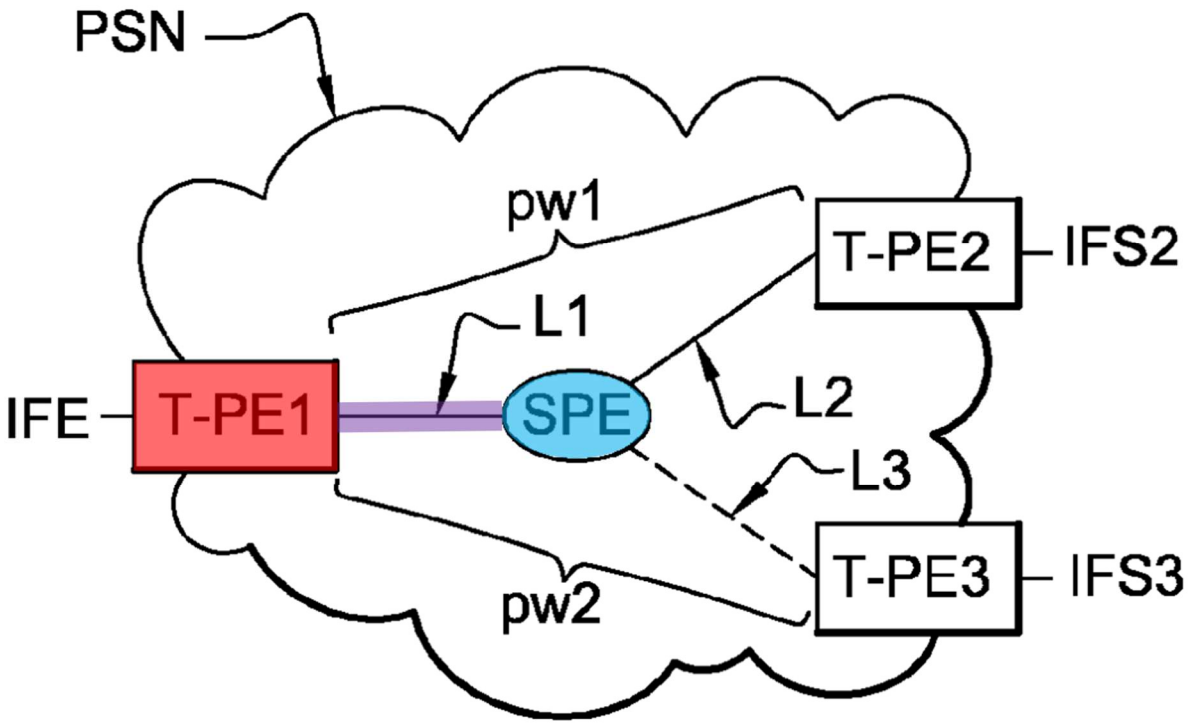

EX1001, Fig. 3 (highlighted).

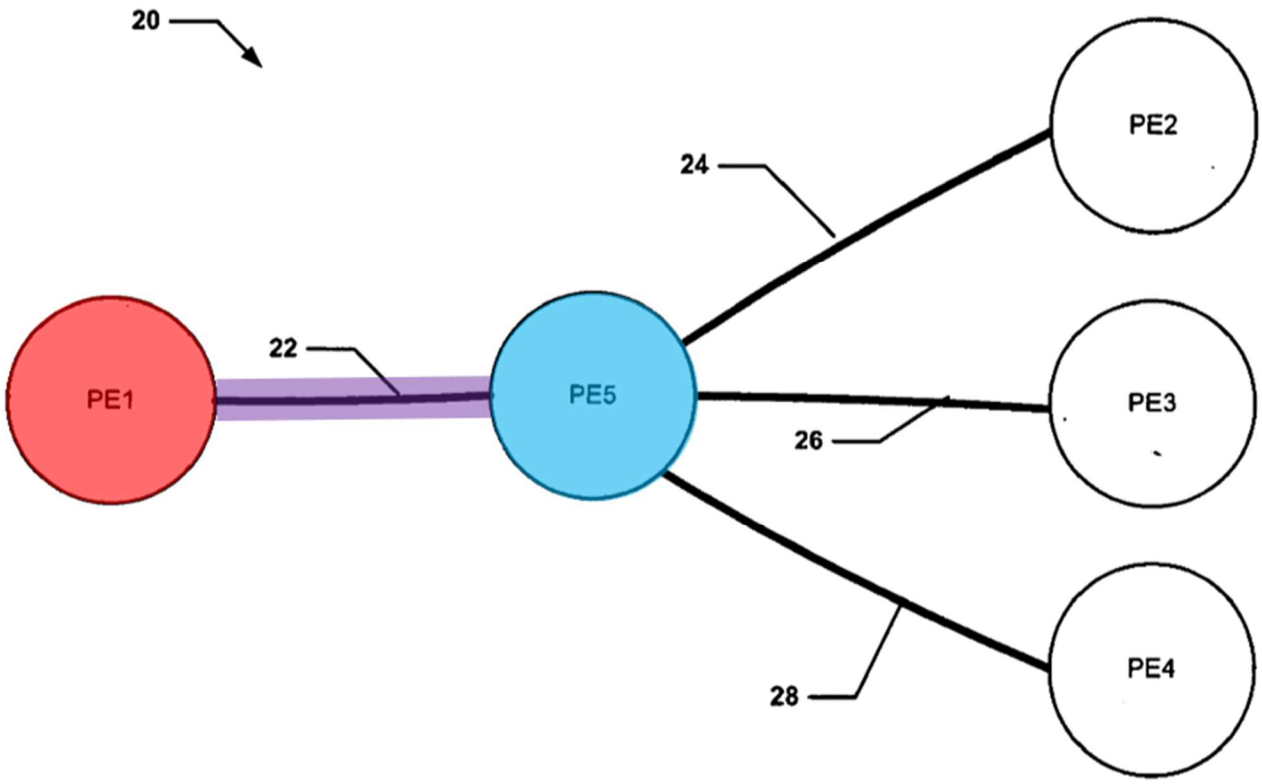

EX1030, Fig. 2 (highlighted).

Both pseudo-wire **22** and link **L1** connect the input router to the intermediate router. EX1003,¶82; EX1001, 1:56-58 ("A first link L**1** that is part of the pseudo-wire pw**1** is set up between the first router T-PE**1** and an intermediate router S-PE of the network PSN."); EX1030, ¶23 ("A PW **22** is signaled between an origination PE (O-PE) (PE**1**) and an S-PE (PE**5**) where the content is sourced at the O-PE.").

As discussed, the Eastern District of Texas court construed "link" to mean a "connection between an interface of a first router and an interface of a second router." *See* §VII. Wainner's pseudo-wire **22** satisfies this construction. EX1003,

¶83. Wainner explains that its routers are network devices that contain a "communications interface" that "allows the network device **240** to communicate with external devices or systems." EX1030, ¶34. Further, Wainner explains that pseudo-wire **22** has "a head-end coupled to" the originating provider edge router "and a tail end coupled to" the switching provider edge router. *Id.*, ¶6. A POSITA would have known that this "coupling" occurs at each router's communications interface, thereby "allow[ing] the network device[s] to communicate with external devices or systems." *Id.*, ¶34; EX1003, ¶83; *see* EX1010, 3 (explaining that pseudo-wires encapsulate data "arriving at the PE-bound port (logical or physical)"); EX1010, 4 (defining "Attachment Circuit" as "[t]he physical or virtual circuit attaching a CE to a PE" and providing examples).

Patent Owner advocated for a nearly identical construction during EPR, asserting that "the term 'link' should be construed to mean 'a connection between an interface on a first device and an interface on a second device.'" *See* §VII. Wainner's pseudo-wire **22** satisfies this construction as well, since its routers are "devices." EX1003, ¶84.

and a second link set up between said intermediate router and a first output router of the packet-switched network. The '775 patent describes a second link (green) that connects the intermediate router (blue) to an output router (yellow):

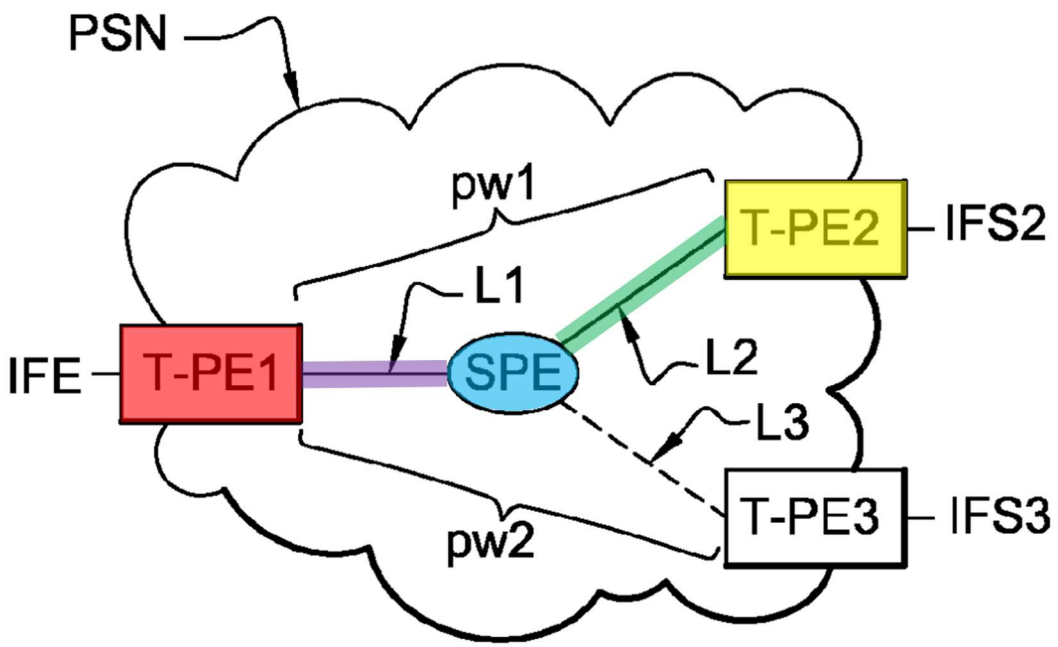

EX1001, Fig. 3 (highlighted). For the same reasons discussed above, (1) Wainner's receiving provider edge router (*e.g.*, **PE2**) corresponds to the '775 patent's output router and (2) Wainner's pseudo-wire segment (*e.g.*, pseudo-wire **24**) corresponds to a link. EX1003, ¶85.

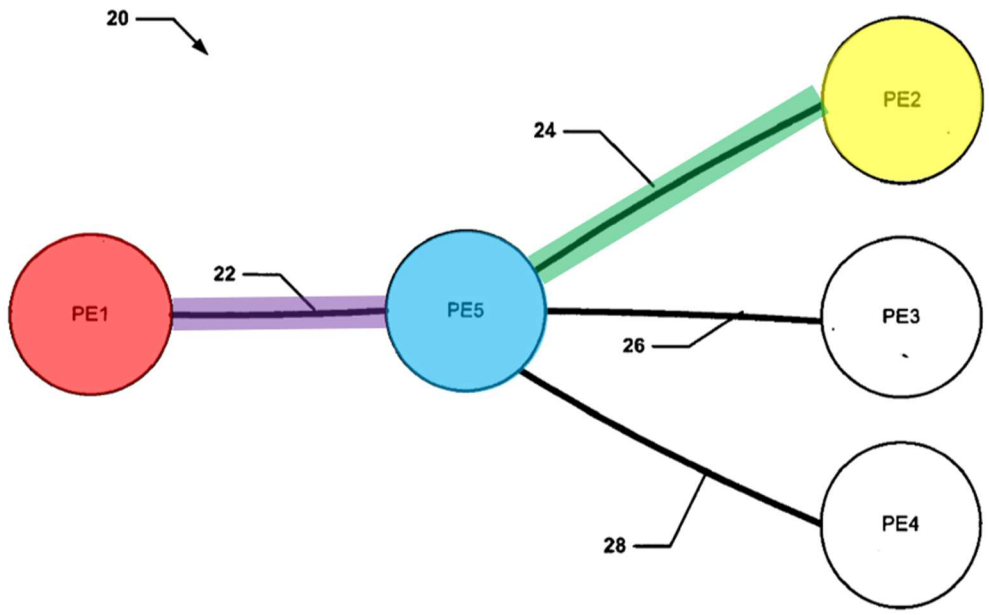

EX1030, Fig. 2 (highlighted). Wainner explains that pseudo-wires **22** and **24** are combined to form a "multi-hop/multi-point pseudowire[]." EX1030, ¶20 ("This model statically binds an upstream PW"—for example, pseudo-wire **22**—"to one or more downstream PW"—for example, pseudo-wire **24**—to form "multi-hop/multi-point pseudowires."). Together, the components comprise the "first pseudo-wire" in limitation 1[a], depicted with a large arrow in the figures below. EX1003, ¶85.

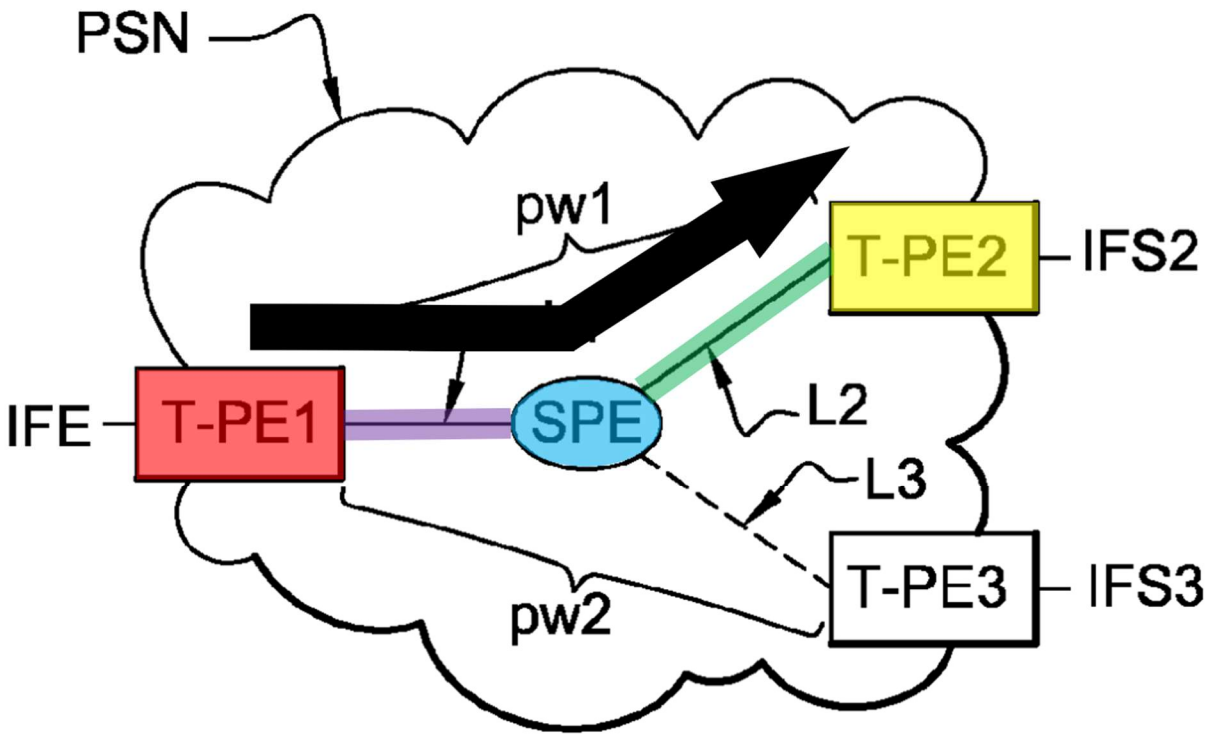

EX1001, Fig. 3 (highlighted and annotated).

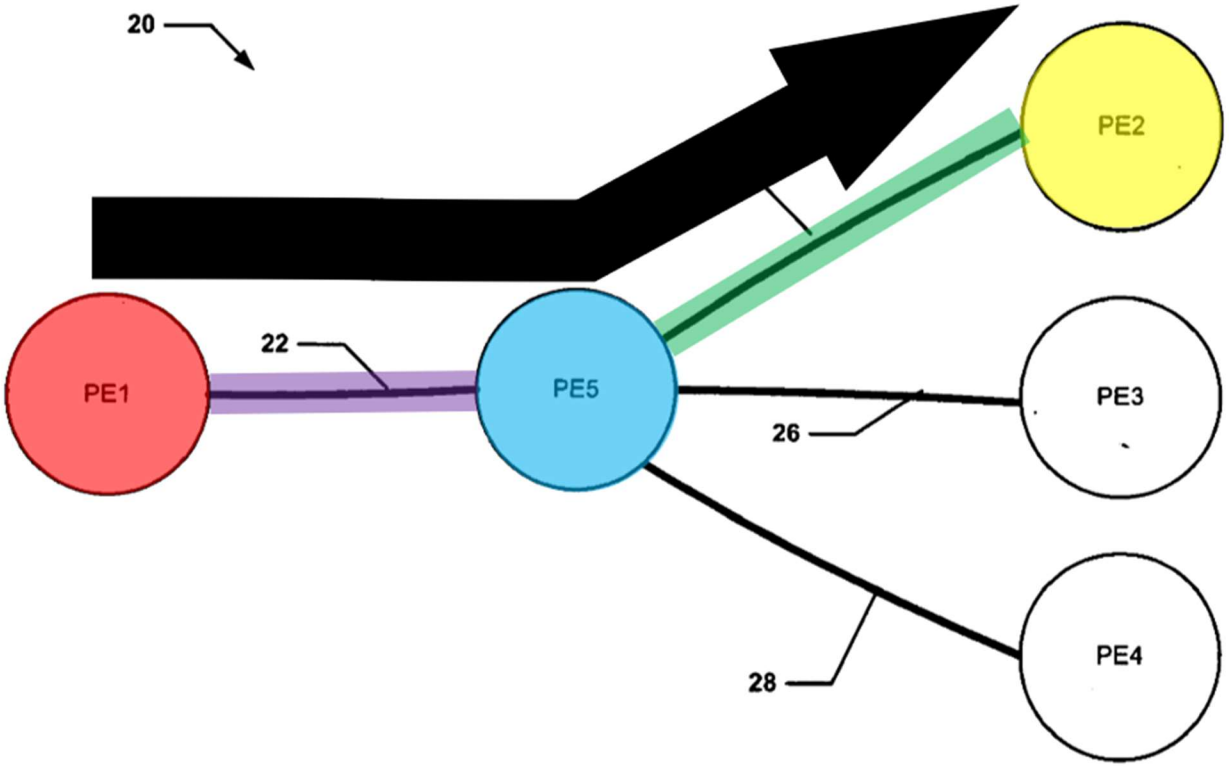

EX1030, Fig. 2 (highlighted and annotated).

In the past proceeding that Patent Owner brought against Cisco, Patent Owner argued that Wainner does not anticipate the ’775 patent because Wainner discloses two distinct pseudo-wires—pseudo-wire **22** and pseudo-wire **24**—that connect the input router to the output router, whereas the ’775 patent requires a single, multi-segment pseudo-wire that connects the input router to the output router. For example, Patent Owner’s expert testified that “[e]ach black line depicted in Figure 2” of Wainner “represents one single pseudowire” and that “Wainner does not disclose any multi-segment pseudowires.” EX1032, 4-6. Patent Owner further argued “that Wainner itself does not mention ‘multi-segment pseudowires,’ ‘MS

pseudowires' or any equivalent term" and therefore does not disclose a multi-segment pseudo-wire that teaches the '775 patent's "first pseudo-wire." EX1034, 2-3.

Patent Owner's argument is wrong. EX1003, ¶¶87-88. To start, the '775 patent itself admits that multi-segment pseudo-wires were known in the art, which it depicts in Figure 1. EX1001, 1:53-2:2, 5:40-42 ("FIG. 1 represents a pseudo-wire set up ***as in the prior art***" that "is defined in more detail in the document 'An Architecture for ***Multi-Segment Pseudo-Wire*** Emulation Edge-to-Edge.'" (emphases added)). Further, Wainner explicitly teaches combining pseudo-wires **22** and **24** to form a single "multi-hop/multi-point pseudowire[]" that spans from input router **PE1** to output router **PE2**. EX1030, ¶20 ("This model statically binds an upstream PW"—for example, pseudo-wire **22**—"to one or more downstream PW"—for example, pseudo-wire **24**—to form "multi-hop/multi-point pseudowires."). A POSITA would have known that a "multi-hop" pseudo-wire is equivalent to a "multi-segment" pseudo-wire. EX1003, ¶87. In fact, Bocci explains that "[a] MS-PW is a single PW that for technical or administrative reasons is segmented ***into a number of concatenated hops***." EX1031, 7. Further, Wainner explains that binding pseudo-wire segments results in "a layer 2 connection" between the input and output router. EX1030, ¶24. A POSITA would have known that a pseudo-wire is a layer

2 connection. EX1003, ¶87. Therefore, Wainner alone teaches the "first pseudo-wire" limitation of claim 1 for the reasons discussed above. *Id.*

Additionally, Wainner in combination with Bocci would have taught this limitation as well. EX1003, ¶88. A POSITA would have found it obvious to combine Wainner and Bocci such that Wainner would operate in its disclosed manner and further implement Bocci's teaching of combining consecutive pseudo-wires to form a multi-segment pseudo-wire. *Id.* Bocci explains how to "concatenate PW segments" to form a "multi-segment PW." EX1031, 4; *see also* EX1031, 6 (A "set of two or more contiguous ***PW segments*** that behave and function as a single point-to-point PW." (emphasis added)). For example, Bocci teaches combining pseudo-wire segments to form a multi-segment pseudo-wire in its Figure 1:

```
                |<---------- MS-Pseudo Wire ---------->|
                |       Provider         Provider      |
          AC    |    |<----1---->|     |<----2--->|    |  AC
           |    V    V           V     V          V    V  |
           |    +----+     +-----+     +----+     +----+  |
 +----+    |    |    |=====|     |=====|    |=====|    |  |    +----+
 |    |-------|......PW..........PW.........PW.......|-------|    |
 | CE1|    |    |    |Seg 1|     |Seg 2|    |Seg 3|    |  |    |CE2 |
 +----+    |    |    |=====|     |=====|    |=====|    |  |    +----+
      ^        +----+     +-----+     +----+     +----+       ^
      |        T-PE1       S-PE1       S-PE2     T-PE2        |
      |                      ^          ^                     |
      |                      |          |                     |
      |                   PW switching points                 |
      |                                                       |
      |                                                       |
      |<------------------- Emulated Service --------------->|
```

Figure 5 Inter-Provider Reference Model

See EX1031, 11. The resulting multi-segment pseudo-wire, Bocci explains, "is a single PW" that "is indistinguishable from a SS-PW," *i.e.*, a single-segment pseudo-wire. *Id.*, 7. A POSITA would have been motivated to combine the pseudo-wire segments in Wainner to form a multi-segment pseudo-wire according to Bocci's teachings and would have had a reasonable expectation of success of doing so. *See* §VIII.A.4.

Thus, Wainner and Bocci would have rendered obvious limitation 1[a]. EX1003, ¶90.

(c) <u>1[b]: setting up a second pseudo-wire between said input router and a second output router of the packet-switched network, wherein the second pseudo-wire comprises said first link and a third link set up between said intermediate router and said second output router, said first link being shared by the first and second pseudo-wires.</u>

Wainner and Bocci would have rendered obvious limitation 1[b]: "setting up a second pseudo-wire between said input router [*e.g.*, **PE1**] and a second output router [*e.g.*, **PE4**] of the packet-switched network [*e.g.*, **network depicted in Figure 2**], wherein the second pseudo-wire comprises said first link [*e.g.*, **pseudo-wire 22**] and a third link [*e.g.*, **pseudo-wire 28**] set up between said intermediate router [*e.g.*, **PE5**] and said second output router [*e.g.*, **PE4**], said first link [*e.g.*, **pseudo-wire 22**] being shared by the first and second pseudo-wires." EX1003, ¶¶91-98.

To start, the '775 patent admits that the majority of limitation 1[b] (all but the last 11 words) was known in the art. EX1003, ¶97; *see* §V.C. For example, the '775

patent explains that "FIG. 2 represents a solution implemented in the prior art to ensure continuity of service in a packet-switched network." EX1001, 5:43-44. Figure 2 depicts "setting up a second pseudo-wire [*e.g.*, **pw2**] between said input router [*e.g.*, **T-PE1**] and a second output router [*e.g.*, **T-PE3**] of the packet-switched network [*e.g.*, **PSN**], wherein the second pseudo-wire comprises said first link [**missing from Figure 2 of the '775 patent**] and a third link [*e.g.*, **L4**] set up between said intermediate router [*e.g.*, **SPE**] and said second output router [*e.g.*, **T-PE3**], said first link being shared by the first and second pseudo-wires [**missing from Figure 2 of the '775 patent**]":

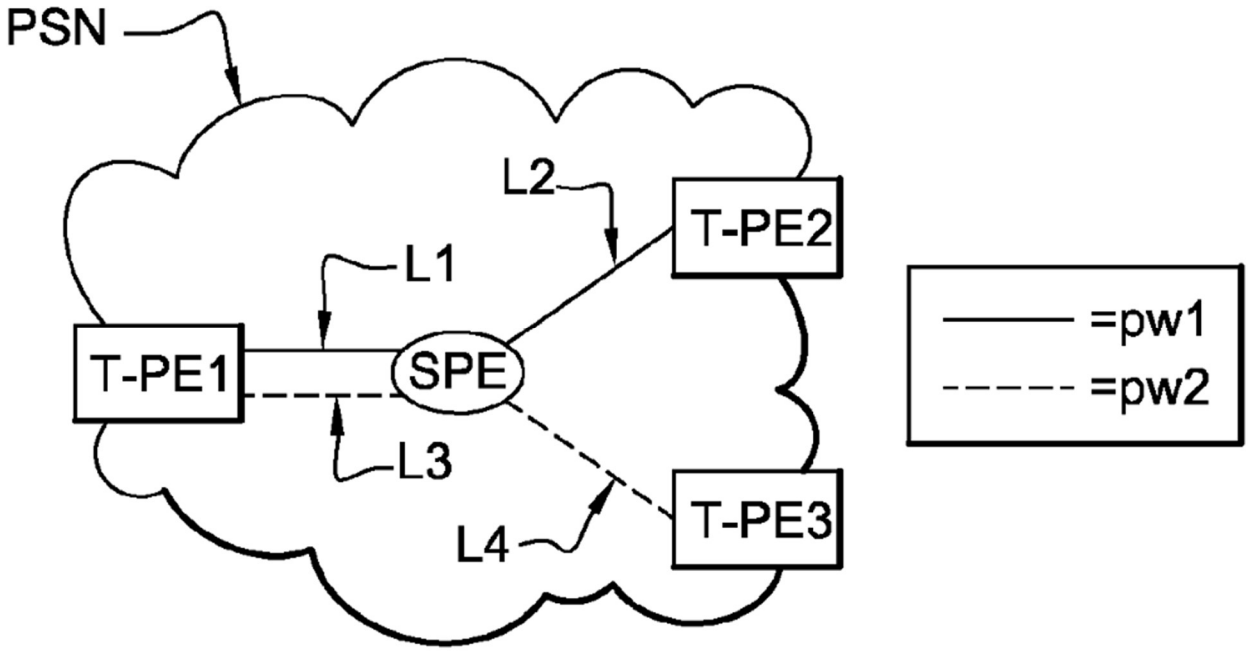

Id., Fig. 2(AA). Thus, the majority of limitation 1[b], as the '775 patent admits, was known and implemented in the prior art. EX1003, ¶97. The only element supposedly missing from the prior art—according to the '775 patent—is sharing the

first link (*e.g.*, **L1**) between the first pseudo-wire (*e.g.*, **pw1**) and the second pseudo-wire (*e.g.*, **pw2**). *Id.*

However, Wainner and Bocci show that this element already existed in the prior art, and the references therefore disclose the entire limitation. *Id.*, ¶92. The elements of this limitation are broken down below:

setting up a second pseudo-wire between said input router and a second output router of the packet-switched network. For the reasons discussed above, Wainner discloses setting up a second pseudo-wire between the input router and a second output router. EX1003, ¶93; *see* §VIII.A.5(b).

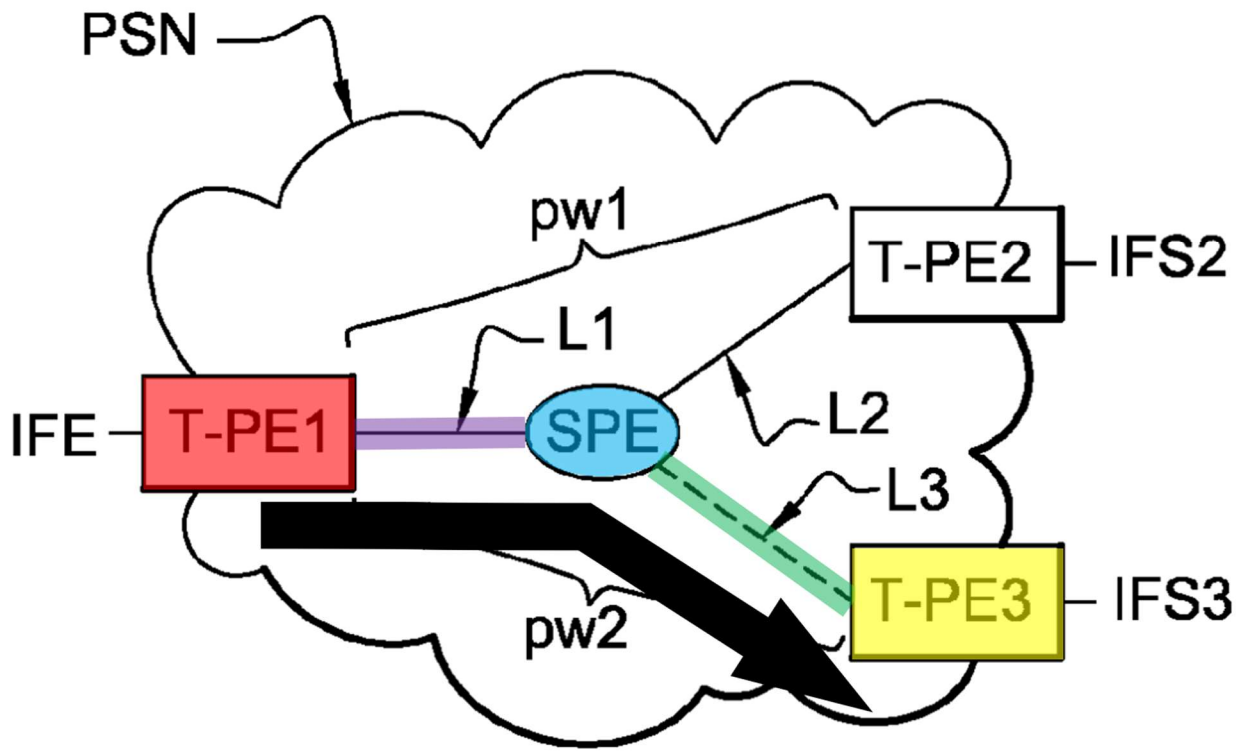

EX1001, Fig. 3 (highlighted and annotated).

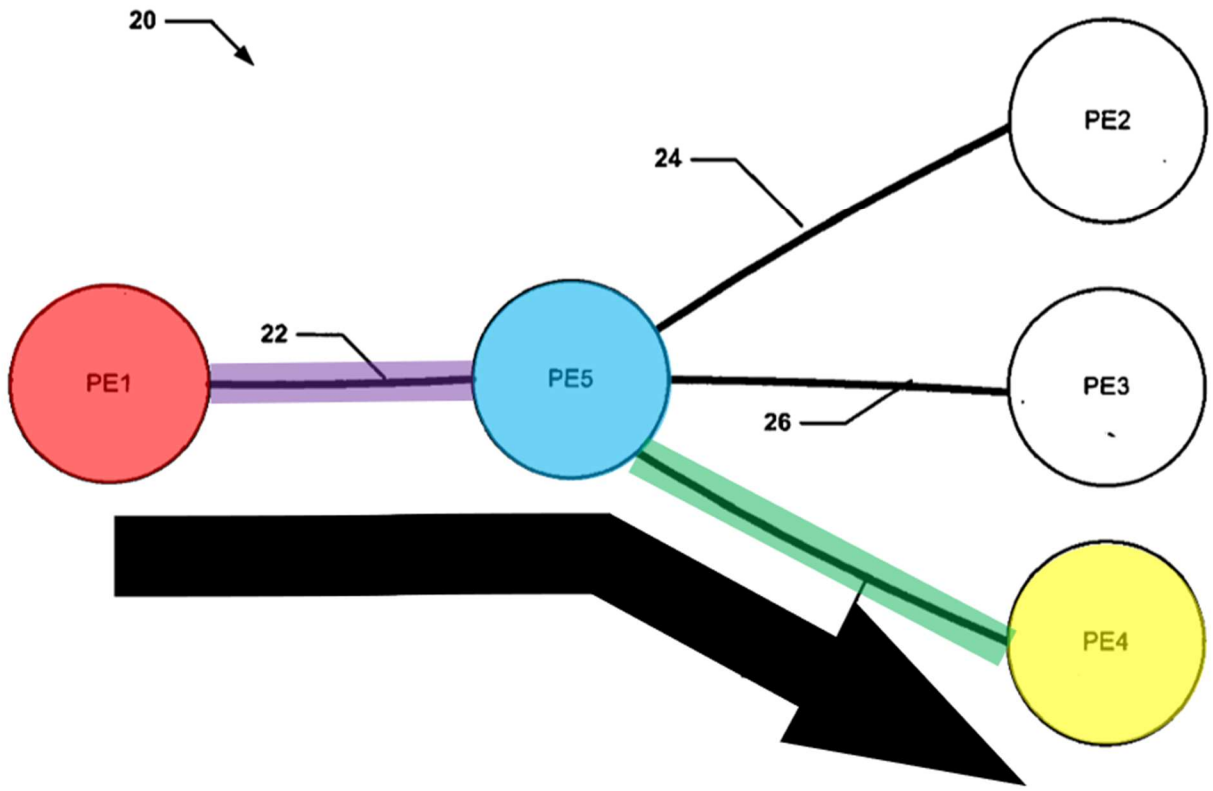

EX1030, Fig. 2 (highlighted and annotated). In short, and as the figures above and previous analysis show, Wainner's origination provider edge router **PE1** (red) corresponds to the '775 patent's input router **T-PE1**. *See* §VIII.A.5(b). Wainner's switching provider edge router **PE5** (blue) corresponds to the '775 patent's second output router **T-PE3**. *Id.* And Wainner explains that pseudo-wires **22** (purple) and **28** (green) combine to form a "multi-hop/multi-point pseudowire[]" that corresponds to the '775 patent's second pseudo-wire. *Id.*; *see also* EX1030, ¶20 ("This model statically binds an upstream PW"—for example, pseudo-wire **22**—"to one or more

downstream PW"—for example, pseudo-wire **28**—to form "multi-hop/multi-point pseudowires."); EX1003, ¶93.

wherein the second pseudo-wire comprises said first link and a third link set up between said intermediate router and said second output router. As shown above, Wainner's second pseudo-wire comprises the first link **22** (purple) and a third link **28** (green) that is set up between the intermediate router **PE5** (blue) and the second output router **PE4** (yellow). EX1003, ¶94.

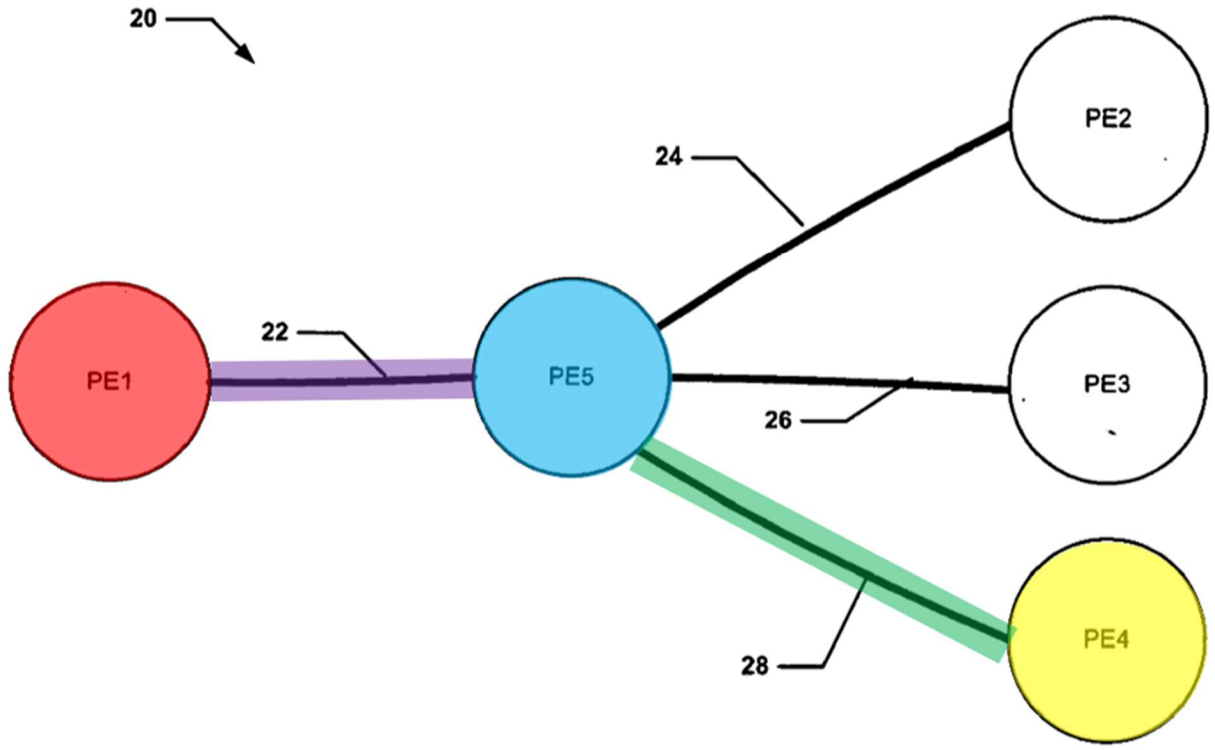

EX1030, Fig. 2 (highlighted). As discussed, pseudo-wires **22** and **28** are "links" both under the construction adopted by the Eastern District of Texas court and the construction advocated by Patent Owner during EPR. *See* §VIII.A.5(b). Also discussed above, Wainner—and at the very least Wainner in combination with

Bocci—teach combining Wainner's pseudo-wires **22** and **28** into a multi-segment pseudo-wire that spans from the input router **PE1** to the output router **PE4**. *See* §VIII.A.5(b).

said first link being shared by the first and second pseudo-wires. Wainner explains that the first link (*e.g.*, **pseudo-wire 22**) is shared by the first and second pseudo-wires. EX1003, ¶95. To start, Wainner's Figure 2 shows that this link (purple) is shared among the pseudo-wires:

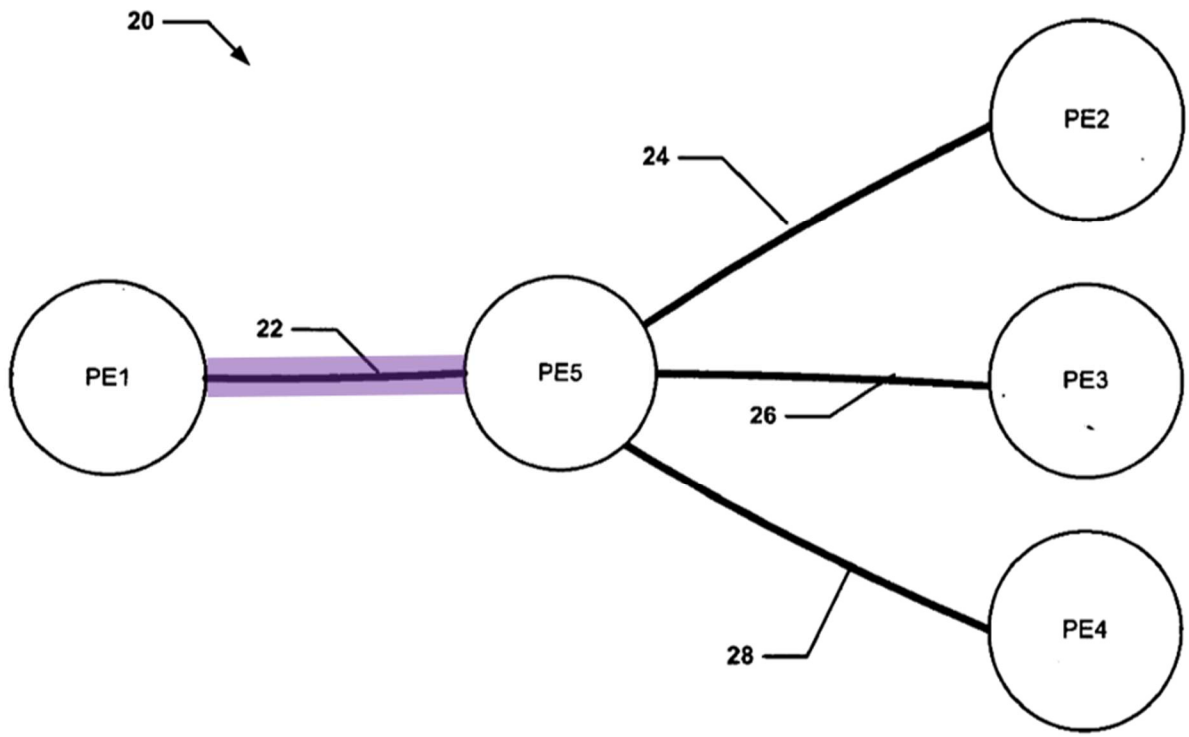

EX1030, Fig. 2 (highlighted); EX1003, ¶95. Additionally, Wainner explains that its "model statically binds an upstream PW"—for example, the shared pseudo-wire **22**—to "***one or more*** downstream PW"—for example, pseudo-wires **24** and **28**.

EX1030, ¶20 (emphasis added). In other words, the single upstream pseudo-wire **22** is bound to (*i.e.*, shared between) ***both*** downstream pseudo-wires **24** and **28**. EX1003, ¶95. This is confirmed in Figure 6A of Wainner, which "comprises a flow chart of a particular embodiment of a method for performing point-to-multipoint multihop distribution using Pseudowires in accordance with embodiments of the invention." EX1030, ¶17.

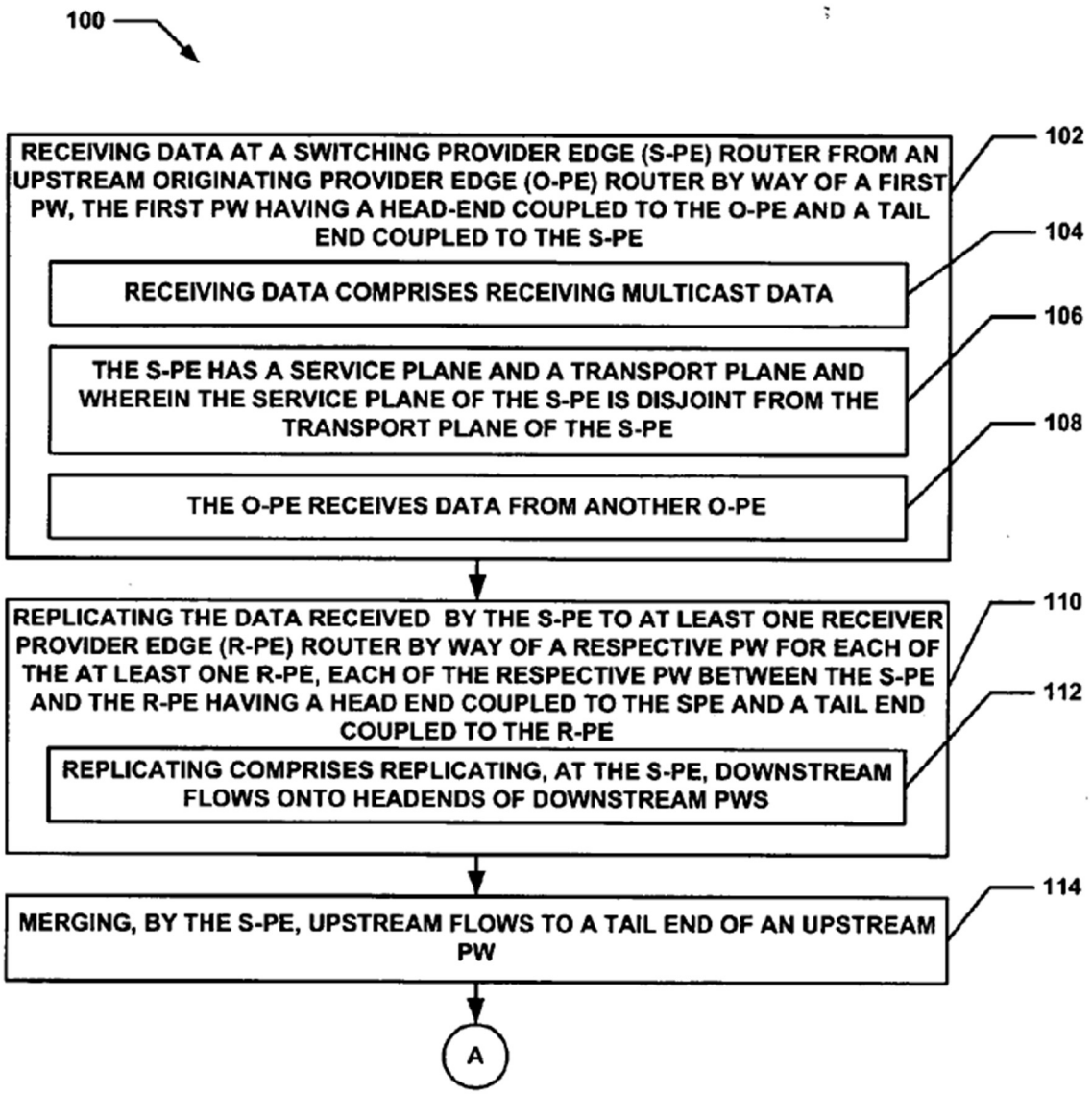

Id., Fig. 6A. Figure 6A explains that, at step **102**, the originating provider edge sends data to the switching provider edge only once. *Id.*, ¶¶29, 31. At step **110**, the switching provider edge then replicates the received data so that it can send multiple copies of that data to different receiver provider edges. *Id.*, ¶¶30-32. Figure 6A confirms that the first link between the originating provider edge and the switching provider edge is "shared" by the first and second pseudo-wires. EX1003, ¶95. If the link were not shared, then the both the first and second pseudo-wires would have to send multiple copies of the data from the originating provider edge to the switching provider edge, and the switching provider edge would not need to replicate the received data. *Id.* By sharing the first link, the originating provider edge only needs to send the data once, thereby accomplishing the '775 patent's goal of "optimiz[ing] the use of network resources, for example bandwidth, between the input router and the intermediate router." EX1001, 3:1-3; EX1003, ¶95. Wainner therefore discloses that this "first link" is shared by the first and second pseudo-wires. EX1003, ¶95.

In the context of Figure 2, Wainner explains that the origination provider edge router **PE1** sends a data packet to the switching provider edge router **PE5** only once. EX1030, ¶¶6, 24. The switching provider edge router **PE5** then duplicates the data packet before sending it to the receiver provider edge routers **PE2**, **PE3**, and **PE4**. *Id.* Accordingly, there is only one link that connects the source router to the

intermediate router in Wainner's network—pseudo-wire **22**. EX1003, ¶96. Therefore, Wainner teaches sharing the first link **22**. *Id.*

Thus, Wainner and Bocci would have rendered obvious limitation 1[b] and the entire claim 1. *Id.*, ¶98.

6. Claim 6

Claim 6 is substantively the same as claim 1 except written in terms of a "computer program stored on non-transitory computer-readable medium." EX1003, ¶99. Claim 6 therefore would have been obvious for the same reasons explained above with respect to claim 1. *Id.* Petitioner nevertheless provides a limitation-by-limitation analysis below.

(a) <u>6[pre]: A computer program product stored on a non-transitory computer-readable medium and comprising program code instructions for implementing a method of setting up at least two pseudo-wires able to broadcast a data stream when said program is executed by a computer, the program code instructions comprising instructions for:</u>

To the extent the preamble is limiting, Wainner and Bocci would have rendered obvious limitation 6[pre]. EX1003, ¶¶100-102.

As discussed, Wainner discloses "a method of setting up at least two pseudo-wires able to broadcast a data stream." EX1003, ¶101; *see* §VIII.A.5(a).

Wainner further discloses "computer program product stored on a non-transitory computer-readable medium and comprising program code instructions for

implementing" this method "when said program is executed by a computer, the program code instructions comprising instructions for" the method. EX1030, ¶7 ("Other embodiments include a computer readable medium having computer readable code thereon for providing a point-to-multipoint multihop distribution using Pseudowires (PWs)."), ¶9 ("More particularly, a computer program product is one embodiment that has a computer-readable medium including computer program logic encoded thereon that when performed in a computerized device provides associated operations providing point-to-multipoint multihop distribution using Pseudowires as explained herein."), ¶¶35-38 (describing a device that implements Wainner's disclosures). Thus, Wainner and Bocci would have rendered obvious limitation 6[pre]. EX1003, ¶102.

(b) <u>6[a]: setting up a first pseudo-wire comprising a first link set up between an input router of a packet-switched network and an intermediate router of the packet-switched network and a second link set up between said intermediate router and a first output router of the packet-switched network; and</u>

As discussed, Wainner and Bocci would have rendered obvious limitation 6[a]. EX1003, ¶103; *see* §VIII.A.5(b).

(c) <u>6[b]: setting up a second pseudo-wire between said input router and a second output router of the packet-switched network, wherein the second pseudo-wire comprises said first link and a third link set up between said intermediate</u>

> router and said second output router, said first link being shared by the first and second pseudo-wires.

As discussed, Wainner and Bocci would have rendered obvious limitation 6[b]. EX1003, ¶104; *see* §VIII.A.5(c). Thus, Wainner and Bocci would have rendered obvious claim 6. EX1003, ¶104.

B. Ground 2: Claims 1 and 6 Would Have Been Obvious in View of Kamite and Bocci

1. Kamite (EX1035)

Kamite (EX1035) was filed on November 1, 2004 and issued on May 18, 2006. Kamite is prior art under at least pre-AIA §102(a) because it was described in a printed publication before the '775 patent's invention. Kamite is a Japanese patent application—JP Patent Application No. 2006-129359 (EX1036). A certified English translation of Kamite (EX1035) is cited throughout the petition.

Kamite discloses implementing pseudo-wires on a multicast network. EX1035, 4-5. Conventionally, pseudo-wires are "based on point-to-point connections." *Id.*, 5. "[M]ulticast tunnel technology," on the other hand, transfers data "in multiple directions" as in a point-to-multipoint network. *Id.*, 4-5; EX1003, ¶106. Unlike multicast tunnels, conventional pseudo-wires must "establish[] a unicast tunnel with multiple downstream PEs individually," "even when sending multicast data." EX1035, 5. For example, Figure 3 of Kamite depicts a network that uses "pseudo wire technology":

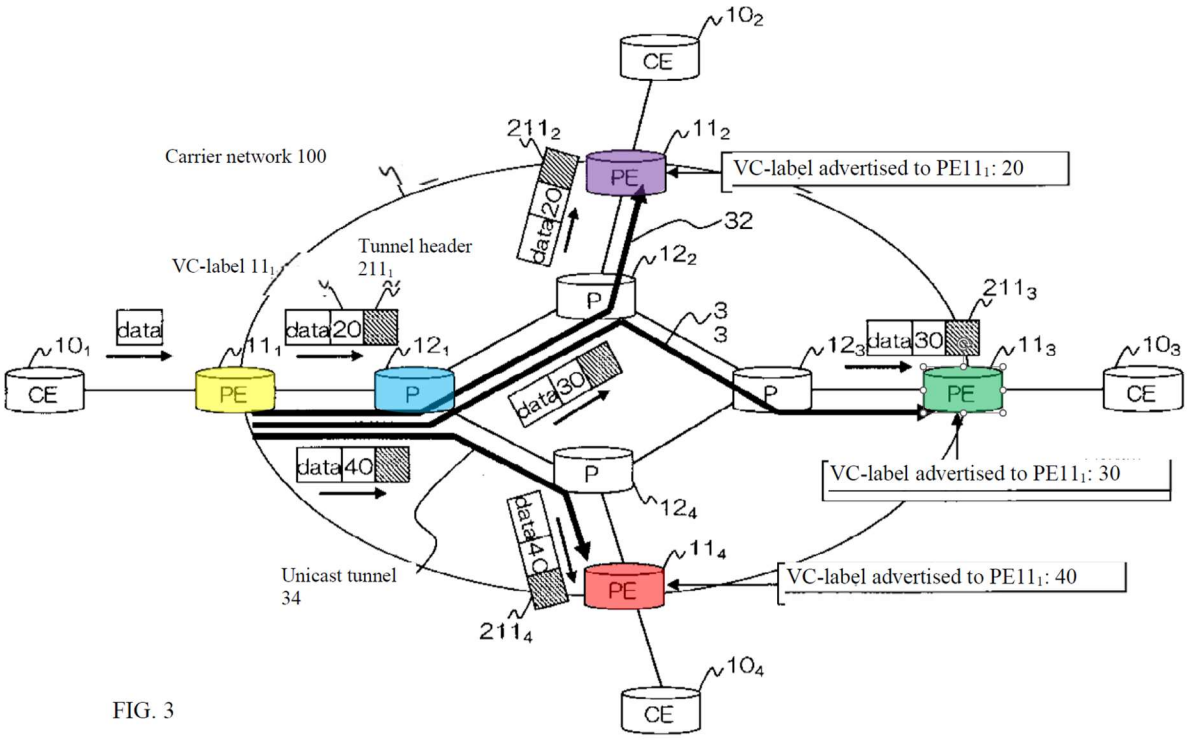

EX1035, Fig. 3 (highlighted), 12. "[A]s shown in FIG. 3, PE11_1 [yellow] establishes a unicast tunnel with PE11_2 [purple], PE11_3 [green], ***and*** PE11_4 [red], copies data from CE10_1, and sends it with the advertised VC-label ***for each*** downstream PE." *Id.*, 5 (emphases added). Thus, Figure 3 depicts how to implement three separate pseudo-wires that share a first link—*i.e.*, the singular connection between PE11_1 and P12_1. EX1003, ¶106. Additionally, Kamite explains that "even though the data actually desired to be sent… is the same, there are three instances of traffic between PE11_1 [yellow] and P12_1 [blue]," as indicated by the three arrows in the figure. EX1035, 5. "In other words, if a multicast tunnel could be utilized…, the traffic between PE11_1 and P12_1 could be made 1/3 that of conventionally." *Id.*

Kamite discloses how to do exactly that, and depicts its invention in the pseudo-wire network of Figure 10:

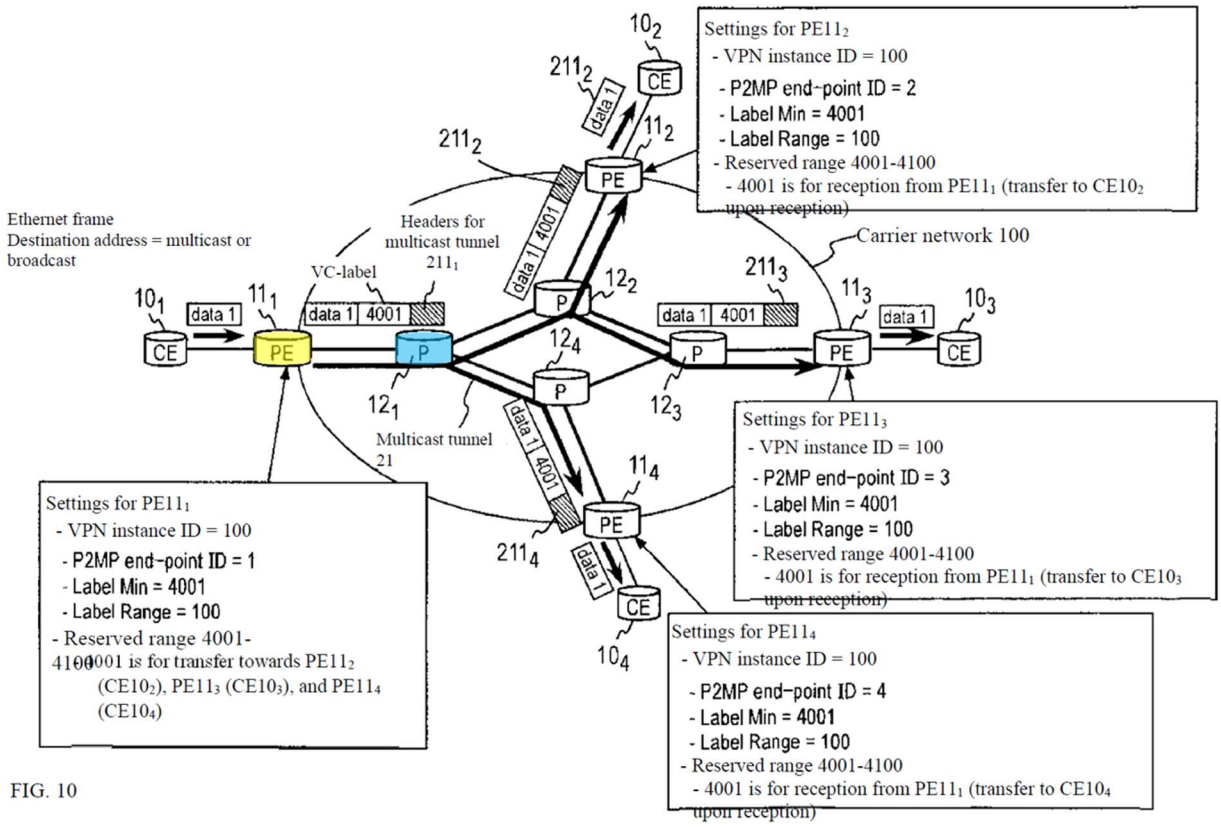

FIG. 10

Id., Fig. 10 (highlighted). In sum, Kamite discloses how to establish a "point-to-multipoint pseudo wire" such that there is only a single connection, or link, between $PE11_1$ (yellow) and $P12_1$ (blue), which is shared between the multiple pseudo-wires. *Id.*, 16; EX1003, ¶107.

2. The Kamite-Bocci Combination

In the Kamite-Bocci combination, Kamite discloses the entirety of claims 1 and 6—in particular, setting up two pseudo-wires that share a first link. EX1003, ¶108. For the same reasons discussed above for the Wainner-Bocci combination,

Patent Owner might argue that Kamite does not disclose multi-segment pseudo-wires and accordingly does not disclose "two pseudo-wires traversing" the first link. *See* §VIII.A.3. Kamite does disclose these elements, as shown in the analysis below. EX1003, ¶108. Additionally, Bocci would have supplemented Kamite's disclosures and further taught combining consecutive segments into a multi-segment pseudo-wire. *Id.* Thus, in the Kamite-Bocci combination, Kamite would operate in its disclosed manner and, to the extent necessary, implement Bocci's teaching of combining consecutive pseudo-wires to form a multi-segment pseudo-wire. *Id.*

3. Motivations to Combine Kamite and Bocci

A POSITA would have been motivated to combine the teachings of Kamite and Bocci and would have had a reasonable expectation of success of doing so. EX1003, ¶109.

First, the prior art contained teachings, suggestions, and motivations that would have led a POSITA to combine Kamite and Bocci. *Id.*, ¶110. Kamite depicts a network that contains pseudo-wires between each provider edge ("PE") router. EX1035, 4. The depicted pseudo-wires comprise multiple segments—for example from a PE to a provider ("P") router, from a P to a P, or from a P to a PE:

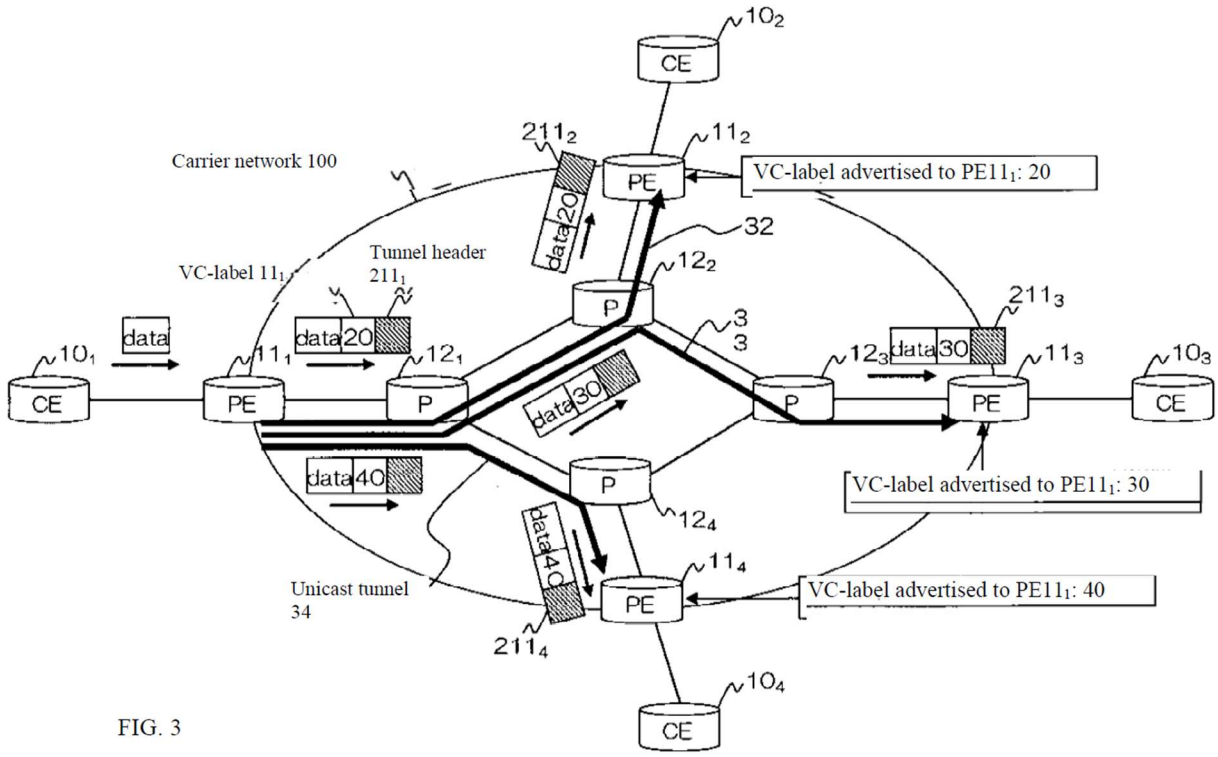

FIG. 3

Id., Fig. 3. A POSITA would have therefore been motivated to search for references, like Bocci, that describe the technical process of combining consecutive segments to form a multi-segment pseudo-wire in order to implement Kamite's teachings. EX1003, ¶110. Bocci explains that implementing multi-segment pseudo-wires provides scalability benefits. *See* EX1031, 3-4. Bocci's teachings are applicable to a variety of network configurations. *See id.*, 3, 8-11. Thus, both Kamite and Bocci contain teachings, suggestions, and motivations to combine the references together. EX1003, ¶110. A POSITA would have had a reasonable expectation of success in combining Kamite and Bocci because Bocci extensively describes the process and

technical details of how to combine consecutive pseudo-wires to form a multi-segment pseudo-wire. *Id.*; *see generally* EX1031.

Second, the Kamite-Bocci combination would have involved merely combining prior art elements according to known methods to yield predictable results. EX1003, ¶111. As shown in the analysis below, Kamite and Bocci include each element in claims 1 and 6. *Id.* A POSITA could have combined the elements as claimed by known methods. *Id.* In fact, Bocci describes in detail how to combine consecutive pseudo-wires to form a multi-segment pseudo-wire, and explains that its teachings are applicable to a variety of network configurations. *E.g.*, EX1031, 8-11. Thus, the combination would have merely involved applying the teachings of Bocci to the particular network configuration described in Kamite. EX1003, ¶111. In this combination, each element merely performs the same function as it does separately—Kamite's network operates in its disclosed manner and Bocci would have supplemented Kamite's teachings by disclosing combining consecutive segments to form multi-segment pseudo-wires. *Id.* A POSITA would have recognized that the results of the combination were predictable, especially because Bocci extensively describes the process and technical details of how to implement its teachings on networks that implement pseudo-wires. *Id.*

Third, the combination would have involved the use of a known technique to improve similar devices in the same way. *Id.*, ¶112. Kamite contains a base

device—*i.e.*, the network described in Kamite and depicted in Kamite's Figure 10. *Id.* Bocci contains a comparable device—*i.e.*, the networks described throughout Bocci and particularly the network configuration depicted in Bocci's Figures 3 and 4—that has been improved in the same way as the claimed invention. *Id.* Specifically, Bocci discloses combining consecutive pseudo-wires into multi-segment pseudo-wires. *See* EX1031, 3-4. A POSITA could have applied the known improvement—*i.e.*, Bocci's teaching of combining consecutive pseudo-wires to form a multi-segment pseudo-wire—in the same way to the base device—*i.e.*, Kamite's network configuration. EX1003, ¶112. Indeed, Bocci describes in detail how to combine consecutive pseudo-wires to form a multi-segment pseudo-wire, and explains that its teachings are applicable to a variety of network configurations. *E.g.*, EX1031, 8-11. The results would have been predictable to a POSITA, especially because Bocci extensively describes the process and technical details of how to implement its teachings on networks that implement pseudo-wires. EX1003, ¶112.

Fourth, the combination would have involved applying a known technique to a known device ready for improvement to yield predictable results. *Id.*, ¶113. Kamite contains a base device—*i.e.*, the network configuration described in Kamite and depicted in Kamite's Figure 10. *Id.* Bocci discloses a known technique that is applicable to the base device. *Id.* Specifically, Bocci discloses combining

consecutive segments into multi-segment pseudo-wires. *See* EX1031, 3-4. A POSITA would have known that Bocci's teachings are generally applicable to networks that deploy consecutive pseudo-wires. EX1003, ¶113. A POSITA would have recognized that applying the known technique—*i.e.*, Bocci's teaching of combining consecutive pseudo-wires to form a multi-segment pseudo-wire—would have yielded predictable results and resulted in an improved system. *Id.* Indeed, Bocci extensively describes the process and technical details of how to implement its teachings on networks that implement pseudo-wires. *Id.*

Finally, Kamite, Bocci, and the '775 patent are analogous art because the references are in the same field of endeavor as each other—routing data via pseudo-wires and improvements to pseudo-wire configurations. *Id.*, ¶114; EX1001, 1:53-2:2, 3:15-29; EX1035, 5; EX1031, 2.

4. Claim 1

(a) <u>1[pre]: A method of setting up at least two pseudo-wires able to broadcast a data stream, comprising:</u>

To the extent the preamble is limiting, Kamite and Bocci would have rendered obvious limitation 1[pre]: "A method of setting up at least two pseudo-wires [*e.g.*, **in Figure 10, a first pseudo-wire from $PE11_1$ to $PE11_2$ and a second pseudo-wire from $PE11_1$ to $PE11_4$**] able to broadcast a data stream, comprising:". EX1003, ¶¶115-121.

Kamite teaches establishing multiple pseudo-wires that propagate throughout a network. EX1035, 5, 7-8. For example, in Figure 10 below, a first pseudo-wire starts at $PE11_1$ (yellow) and ends at $PE11_2$ (purple), and a second pseudo-wire starts at $PE11_1$ (yellow) and ends at $PE11_4$ (red):

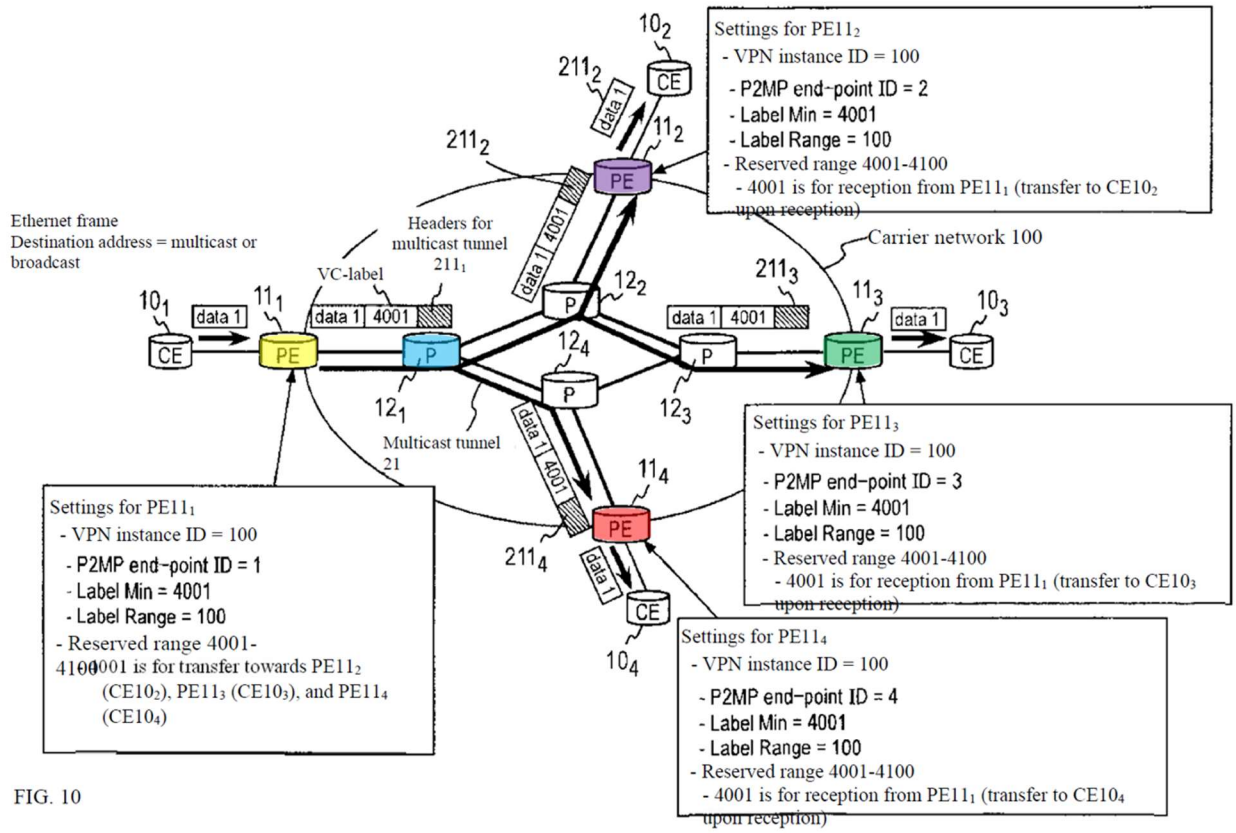

Id., Fig. 10 (highlighted). These pseudo-wires broadcast data. EX1035, 5 ("If a PE (the upstream PE) receives multicast data from a CE, the upstream PE applies a VC-label and sends the data to the requisite PEs (downstream PEs)."). The data in Kamite corresponds to the '775 patent's data stream. EX1003, ¶116. The '775 patent explains that a data stream is merely "the packets for transmission." EX1001,

1:30-33. Similarly, Kamite discloses transmitting data packets. *See, e.g.*, EX1035, 5.

For the same reasons discussed above with respect to Wainner, Patent Owner might argue that Kamite discloses one point-to-multipoint pseudo-wire rather than multiple point-to-point pseudo-wires that share a first link. EX1003, ¶117; *see* §VIII.A.5(a).

Again, this is wrong. EX1003, ¶¶118-120. First, Kamite discloses two point-to-point pseudo-wires that share the first link. EX1003, ¶118. In Kamite's Figure 3, "PE11_1 establishes a unicast tunnel separately with PE11_2, PE11_3, and PE11_4." EX1035, 5.

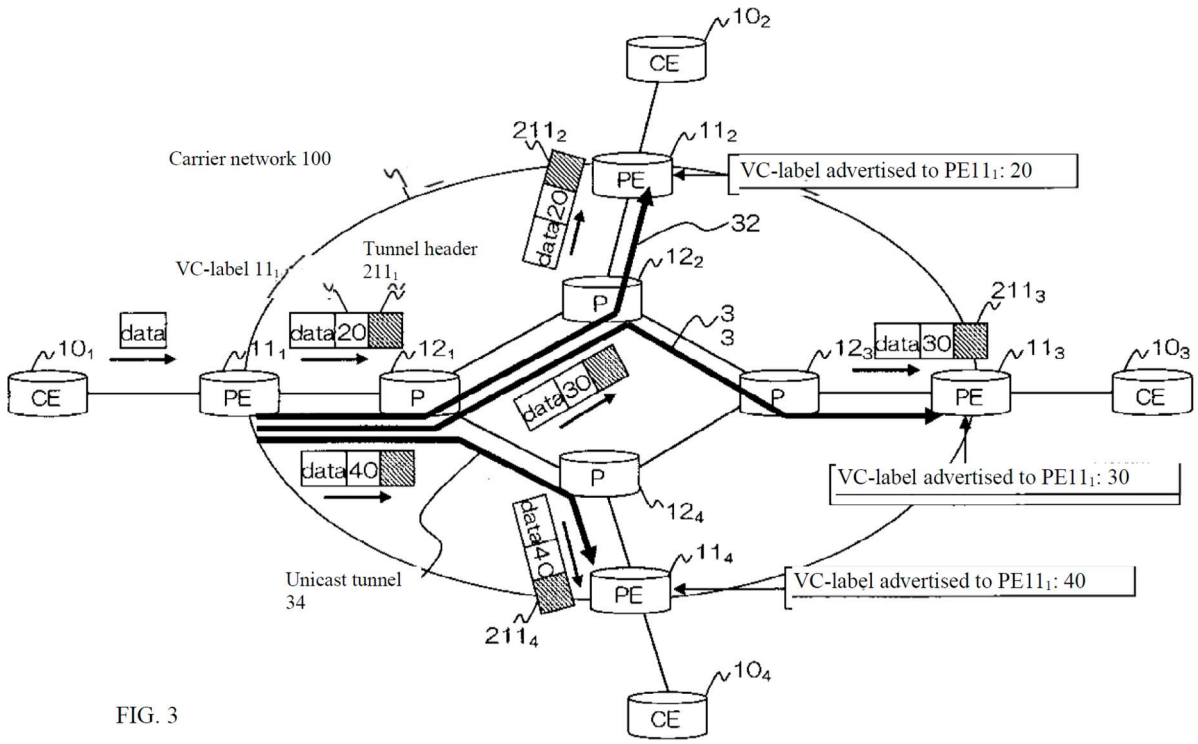

FIG. 3

Id., Fig. 3. Figure 3 depicts implementing three separate pseudo-wires that share a first link—*i.e.*, the singular connection between $PE11_1$ and $P12_1$ that is depicted in Figure 3. EX1003, ¶118. Additionally, Kamite describes modifying this pseudo-wire implementation to more efficiently share the first link between the multiple point-to-point pseudo-wires. EX1035, 5.

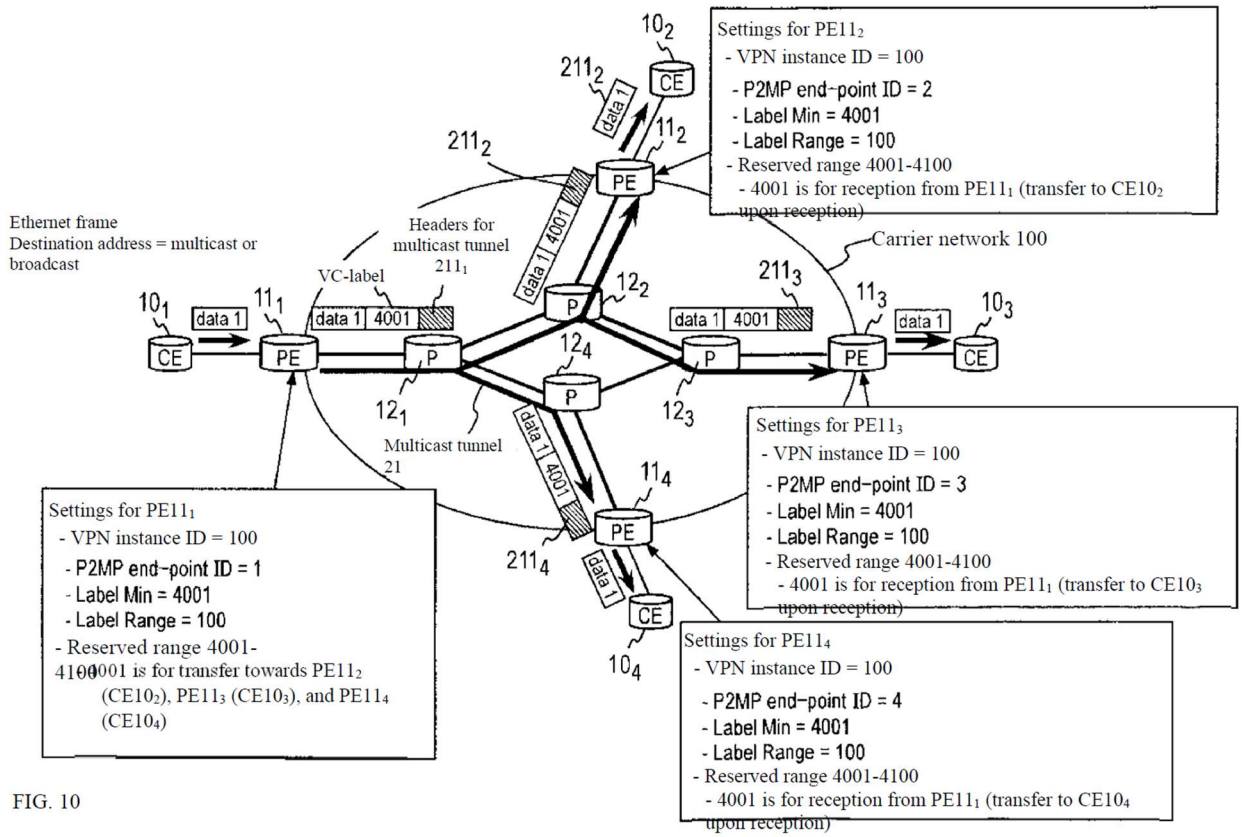

FIG. 10

Id., Fig. 10. Thus—as discussed further below with respect to the appropriate limitations—the resulting pseudo-wire from $PE11_1$ to $PE11_2$ corresponds to the '775 patent's "first pseudo-wire" in limitation 1[a] and the resulting pseudo-wire from $PE11_1$ to $PE11_4$ corresponds to the '775 patent's "second pseudo-wire" in limitation 1[b]. EX1003, ¶118.

Second, at the very least Kamite in combination with Bocci would have rendered obvious two point-to-point pseudo-wires that share a first link. *Id.*, ¶119. In this combination, Kamite's Figure 10 depicts multiple segments, the first of which—between $PE11_1$ and $P12_1$—is shared between the others—like the segments from $P12_1$ to $PE11_2$ and from $P12_1$ to $PE11_4$. EX1035, 5; *see* EX1035, Fig. 10. As discussed in further detail below, Bocci teaches combining consecutive segments to form a multi-segment point-to-point pseudo-wire. *E.g.*, EX1031, 4 ("This requires a capability in PE2 that can concatenate PW segments PE1-PE2 to PW segments PE2-PE3. The end-to-end PW is known as a multi-segment PW."). A POSITA would have found it obvious to use Bocci's teachings to combine Kamite's first segment from $PE11_1$ and $P12_1$ and second segment from $P12_1$ to $PE11_2$ to form the '775 patent's "first pseudo-wire" in limitation 1[a] and further combine Kamite's first segment from $PE11_1$ and $P12_1$ and third segment from $P12_1$ to $PE11_4$ to form the '775 patent's "second pseudo-wire" in limitation 1[b]. EX1003, ¶119.

Third, Patent Owner itself has asserted that the '775 patent encompasses point-to-multipoint pseudo-wires. EX1003, ¶120; *see* §VIII.A.5(a). Similarly, Kamite discloses "transfer[ing] ***point-to-multipoint*** traffic." EX1035, 7 (emphasis added). Patent Owner should not be allowed to interpret the '775 patent one way for purposes of infringement and another way for purposes of invalidity.

Thus, Kamite and Bocci would have rendered obvious limitation 1[pre]. EX1003, ¶121.

(b) 1[a]: setting up a first pseudo-wire comprising a first link set up between an input router of a packet-switched network and an intermediate router of the packet-switched network and a second link set up between said intermediate router and a first output router of the packet-switched network; and

Kamite and Bocci would have rendered obvious limitation 1[a]: "setting up a first pseudo-wire comprising a first link [*e.g.*, **link between PE11$_1$ and P12$_1$**] set up between an input router [*e.g.*, **PE11$_1$**] of a packet-switched network [*e.g.*, **network depicted in Figure 10**] and an intermediate router [*e.g.*, **P12$_1$**] of the packet-switched network and a second link [*e.g.*, **link between P12$_1$ and PE11$_2$**] set up between said intermediate router [*e.g.*, **P12$_1$**] and a first output router [*e.g.*, **PE11$_2$**] of the packet-switched network." EX1003, ¶¶122-133.

To start, the '775 patent admits that limitation 1[a] was known in the art. EX1003, ¶132; *see* §§V.C, VIII.A.5(b).

Additionally, Kamite discloses this limitation. EX1003, ¶123. The elements of this limitation are broken down below:

setting up a first pseudo-wire comprising a first link set up between an input router of a packet-switched network and an intermediate router of the packet-

switched network. Kamite depicts the following network configuration in Figure 10[5]:

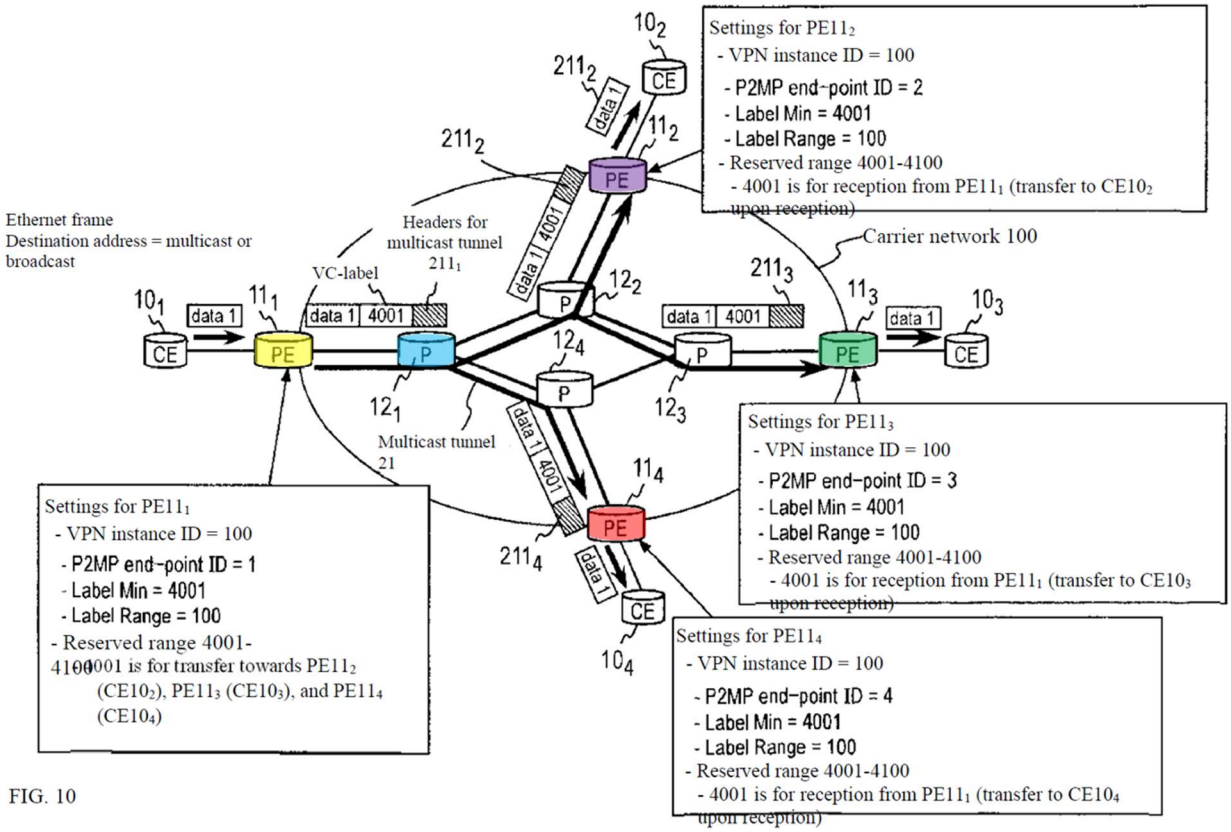

EX1035, Fig. 10 (highlighted). $PE11_1$ (yellow) corresponds to the '775 patent's input router. EX1003, ¶124. As Kamite explains, $PE11_1$ is a "provider edge router" that sits on the edge of the carrier network **100**. EX1035, 5, Fig. 10. Similarly, the input router in the '775 patent is "at the edge of a packet-switched network PSN."

[5] Kamite's disclosure in Figure 3 is also sufficient to meet this limitation because Figure 3 depicts three separate pseudo-wires that share a first link—*i.e.*, the singular connection between $PE11_1$ and $P12_1$. EX1003, n.6; *see* §VIII.B.1

EX1001, 1:53-56. $P12_1$ (blue) corresponds to the '775 patent's intermediate router. EX1003, ¶124. As Kamite explains, $P12_1$ is a "provider router" similar to the intermediate router in the '775 patent. EX1035, 5.

The network in Figure 10 corresponds to the '775 patent's packet-switched network. EX1003, ¶125. In particular, both networks transmit data in the form of packets. *Compare* EX1035, 5 ("Conventional pseudo wire technology based on point-to-point connections applies VC-labels for VC-LSP traffic transfer to packets to be carried.") *and* EX1035, Fig. 10 (depicting packets routed across the network), *with* EX1001, 1:30-32 ("In a packet-switched network, data is transmitted in the form of packets processed by routers of the network until they reach their destination.").

The connection between $PE11_1$ and $P12_1$ corresponds to the '775 patent's "first link." EX1003, ¶126. As discussed, the Eastern District of Texas court construed "link" to mean a "connection between an interface of a first router and an interface of a second router." *See* §VII. Kamite's connection satisfies this construction. EX1003, ¶126. Kamite sets up its pseudo-wires according to a type-length variable ("TLV"), which "is a unit of information storage." EX1035, 7. The TLV contains an "Interface Parameter" that is "used in the conventional point-to-point pseudo wire specification" and "[i]n the present invention, this parameter is used as-is." *Id.* A POSITA would have known that the Interface Parameter specifies

how the pseudo-wire connects to a particular interface; for example, verifying that the "ingress and egress ports at the edges of the circuit have the necessary capabilities to interoperate with each other." EX1037, 14; EX1003, ¶126; *see also* EX1010, 3 (explaining that pseudo-wires encapsulate data "arriving at the PE-bound port (logical or physical)"); EX1010, 4 (defining "Attachment Circuit" as "[t]he physical or virtual circuit attaching a CE to a PE" and providing examples). Further, a POSITA would have known that each link in a pseudo-wire connects from an interface of a first router to an interface of a second router. EX1003, ¶126. Thus, the connections between routers in Kamite correspond to the '775 patent's "links." *Id.*

Patent Owner advocated for a nearly identical construction during EPR, asserting that "the term 'link' should be construed to mean 'a connection between an interface on a first device and an interface on a second device.'" *See* §VII. Kamite's connection between $PE11_1$ and $P12_1$ satisfies this construction as well, since its routers are "devices." EX1003, ¶127.

and a second link set up between said intermediate router and a first output router of the packet-switched network. Kamite's $PE11_2$ (purple) corresponds to the '775 patent's output router. EX1003, ¶128. As Kamite explains, $PE11_2$ is a "provider edge router" that sits on the edge of the carrier network **100**. EX1035, 5, Fig. 10. Similarly, the output router in the '775 patent is "at the edge of a packet-

switched network PSN." EX1001, 1:53-56. The fact that there is an additional intermediate router $P12_2$ (not highlighted) in between Kamite's intermediate router $P12_1$ (blue) and the output router $PE11_2$ (purple) is inconsequential. EX1003, ¶128. Indeed, the '775 patent explains that "[i]n this kind of embodiment, the first, second, and third links ***are not necessarily direct links*** between routers. For example, the second link set up between the intermediate router and the first output router can comprise ***one or more hops and possibly pass through one or more other intermediate routers*** before reaching the output router." EX1001, 3:30-38 (emphases added).

And for the same reasons discussed above, the connection between $P12_1$ and $PE11_2$ corresponds to the '775 patent's "second link." EX1003, ¶129. Altogether, these components form a first pseudo-wire, represented by the arrow from $PE11_1$ to $PE11_2$ in Figure 10. *Id.*

For the same reason discussed above with respect to Wainner, Patent Owner might argue that Kamite does not anticipate the '775 patent because Kamite allegedly does not disclose multi-segment pseudo-wires that connect the input router to the output routers. *See* §VIII.A.5(b). If Patent Owner makes this argument, it is incorrect. To start, the '775 patent itself admits that multi-segment pseudo-wires were known in the art, which it depicts in Figure 1. EX1001, 1:53-2:2, 5:40-42 ("FIG. 1 represents a pseudo-wire set up ***as in the prior art***" that "is defined in more

detail in the document 'An Architecture for ***Multi-Segment Pseudo-Wire*** Emulation Edge-to-Edge.'" (emphases added)). Further, the pseudo-wires depicted in Kamite comprise multiple segments. *See* EX1035, Figs. 3 & 10. Steps 2 and 3 of Kamite's invention describe setting up pseudo-wires between each PE—for example, from $PE11_1$ to $PE11_2$. *Id.*, 7-8. Therefore, Kamite alone teaches the "first pseudo-wire" limitation of claim 1 for the reasons discussed above. EX1003, ¶130.

Additionally, Kamite in combination with Bocci would have taught this limitation as well. EX1003, ¶131. A POSITA would have found it obvious to combine Kamite and Bocci such that Kamite would operate in its disclosed manner and further implement Bocci's teaching of combining consecutive pseudo-wires to form a multi-segment pseudo-wire. *Id.* Bocci explains how to "concatenate PW segments" to form a "multi-segment PW." EX1031, 4; *see also* EX1031, 6 (A "set of two or more contiguous ***PW segments*** that behave and function as a single point-to-point PW." (emphasis added)). For example, Bocci teaches combining pseudo-wire segments to form a multi-segment pseudo-wire in its Figure 1:

```
              |<---------- MS-Pseudo Wire ---------->|
              |       Provider         Provider      |
        AC    |    |<----1---->|     |<----2--->|    |  AC
         |    V    V           V     V          V    V  |
         |    +----+     +-----+     +----+     +----+  |
+----+   |    |    |=====|     |=====|    |=====|    |  |    +----+
|    |-------|.....PW.........PW........PW.......|-------|    |
| CE1|   |    |    |Seg 1|     |Seg 2|    |Seg 3|    |  |    |CE2 |
+----+   |    |    |=====|     |=====|    |=====|    |  |    +----+
     ^       +----+     +-----+     +----+     +----+       ^
     |       T-PE1       S-PE1       S-PE2     T-PE2        |
     |                     ^          ^                     |
     |                     |          |                     |
     |                 PW switching points                  |
     |                                                      |
     |                                                      |
     |<------------------- Emulated Service --------------->|
```

Figure 5 Inter-Provider Reference Model

See EX1031, 11. The resulting multi-segment pseudo-wire, Bocci explains, "is a single PW" that "is indistinguishable from a SS-PW," *i.e.*, a single-segment pseudo-wire. *Id.*, 7. A POSITA would have been motivated to combine the segments in Kamite to form multi-segment pseudo-wires according to Bocci's teachings and would have had a reasonable expectation of success of doing so. *See* §VIII.B.3.

Thus, Kamite and Bocci would have rendered obvious limitation 1[a]. EX1003, ¶133.

(c) <u>1[b]: setting up a second pseudo-wire between said input router and a second output router of the packet-switched network, wherein the second pseudo-wire comprises said first link and a third link set up between said intermediate</u>

router and said second output router, said first link being shared by the first and second pseudo-wires.

Kamite and Bocci would have rendered obvious limitation 1[b]: "setting up a second pseudo-wire between said input router [*e.g.*, **PE11$_1$**] and a second output router [*e.g.*, **PE11$_4$**] of the packet-switched network [*e.g.*, **network depicted in Figure 10**], wherein the second pseudo-wire comprises said first link [*e.g.*, **link between PE11$_1$ and P12$_1$**] and a third link [*e.g.*, **link between P12$_1$ and PE11$_4$**] set up between said intermediate router [*e.g.*, **P12$_1$**] and said second output router [*e.g.*, **PE11$_4$**], said first link [*e.g.*, **link between PE11$_1$ and P12$_1$**] being shared by the first and second pseudo-wires." EX1003, ¶¶134-141.

To start, the '775 patent admits that the majority of limitation 1[b] was known in the art. EX1003, ¶140; *see* §§V.C, VIII.A.5(c). The only element supposedly missing from the prior art—according to the '775 patent—is sharing the first link (*e.g.*, **L1**) between the first pseudo-wire (*e.g.*, **pw1**) and the second pseudo-wire (*e.g.*, **pw2**). EX1003, ¶140.

Kamite and Bocci show that this element already existed in the prior art, and these references therefore disclose the entire limitation. *Id.*, ¶135. The elements of this limitation are broken down below:

setting up a second pseudo-wire between said input router and a second output router of the packet-switched network. For the reasons discussed above,

Kamite discloses setting up a second pseudo-wire between the input router and a second output router. EX1003, ¶136; *see* §VIII.B.4(b).

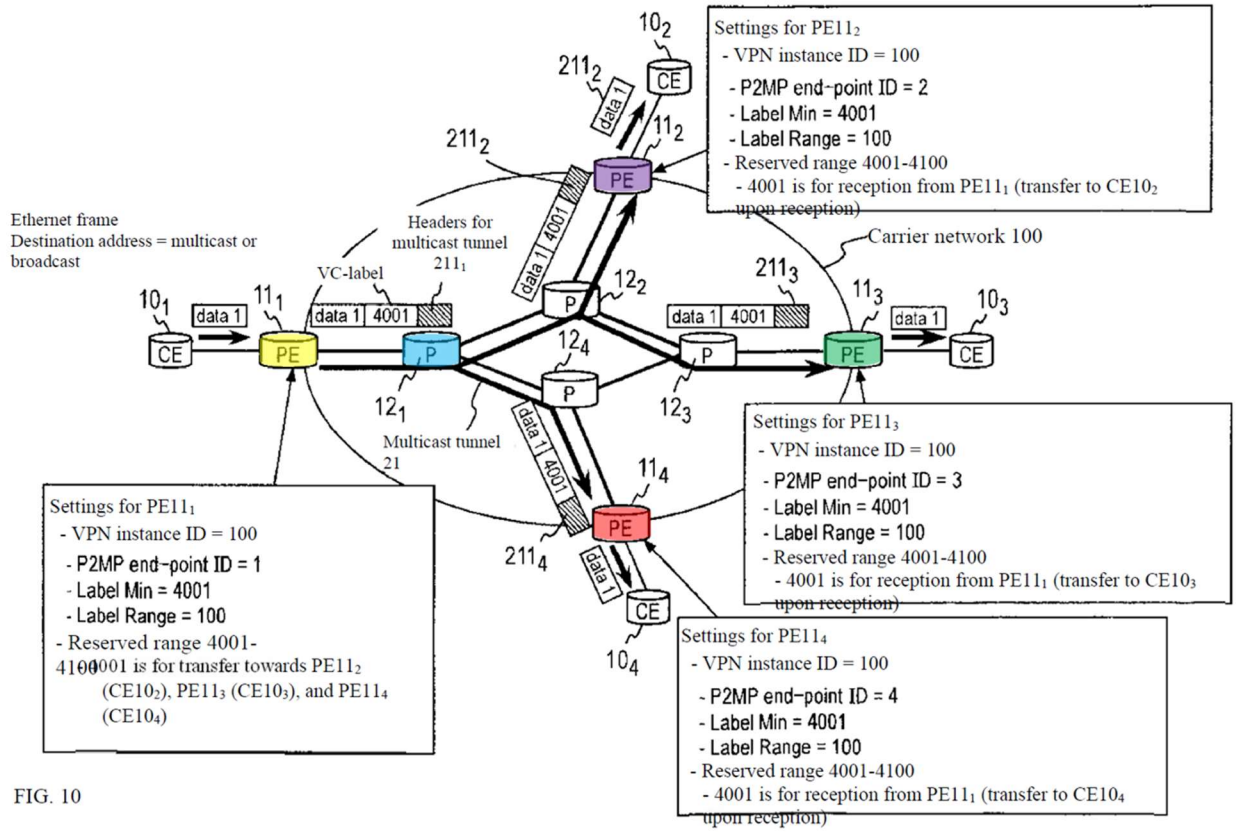

EX1035, Fig. 10 (highlighted). As the figure above[6] and previous analysis show, Kamite's $PE11_1$ (yellow) corresponds to the '775 patent's input router **T-PE1**. *See* §VIII.B.4(b). Similarly, Kamite's $PE11_4$ (red) corresponds to the '775 patent's

[6] Kamite's disclosure in Figure 3 is also sufficient to meet this limitation because Figure 3 depicts three separate pseudo-wires that share a first link—*i.e.*, the singular connection between $PE11_1$ and $P12_1$. EX1003, n.7; *see* §VIII.B.1

second output router **T-PE3**. *Id.* And the arrow from $PE11_1$ to $PE11_4$ corresponds to the '775 patent's "second pseudo-wire." *Id.*

wherein the second pseudo-wire comprises said first link and a third link set up between said intermediate router and said second output router. As shown above, Kamite's second pseudo-wire comprises the first link from input router $PE11_1$ (yellow) to intermediate router $P12_1$ (blue) and a third link from the intermediate router $P12_1$ (blue) to the second output router $PE11_4$ (red). EX1003, ¶137. The fact that there is an additional intermediate router $P12_4$ (not highlighted) in between Kamite's intermediate router $P12_1$ (blue) and the output router $PE11_4$ (red) is inconsequential. *Id.* Indeed, the '775 patent explains that "[i]n this kind of embodiment, the first, second, and third links ***are not necessarily direct links*** between routers. For example, the second link set up between the intermediate router and the first output router can comprise ***one or more hops and possibly pass through one or more other intermediate routers*** before reaching the output router." EX1001, 3:30-38 (emphases added).

As discussed, the connection between intermediate router $P12_1$ (blue) and the output router $PE11_4$ (red) is a "link" both under the construction adopted by the Eastern District of Texas court and the construction advocated by Patent Owner during EPR. *See* §VIII.B.4(b); EX1003, ¶138. Also discussed above, Kamite—and at the very least Kamite in combination with Bocci—teach combining Kamite's

segments into a multi-segment pseudo-wire that spans from the input router $PE11_1$ to the output router $PE11_4$. *See* §VIII.B.4(b); EX1003, ¶138.

said first link being shared by the first and second pseudo-wires. Kamite explains that the first link (*e.g.*, **the link between $PE11_1$ and $P12_1$**) is shared by the first and second pseudo-wires. EX1003, ¶139. This is shown in both Figures 3 and 10:

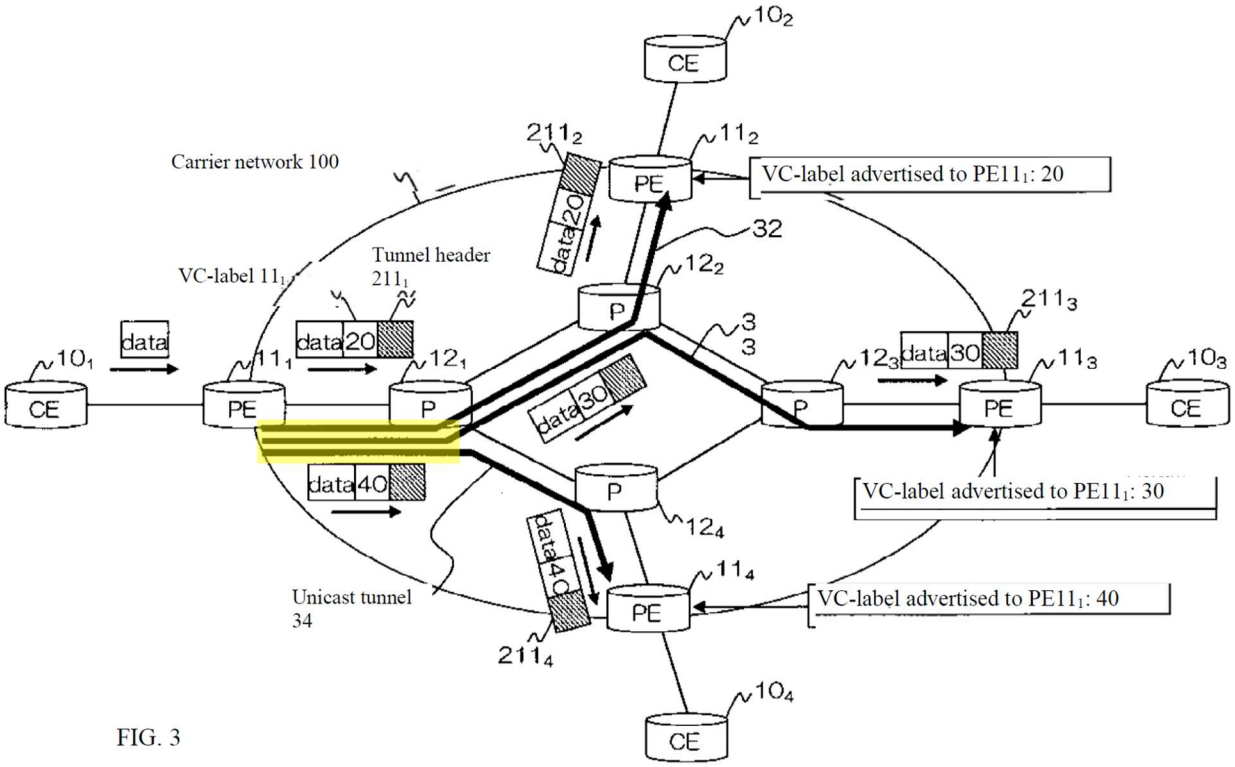

FIG. 3

EX1035, Fig. 3 (highlighted). In Figure 3, three pseudo-wires (highlighted in yellow) traverse a single link between $PE11_1$ and $P12_1$.

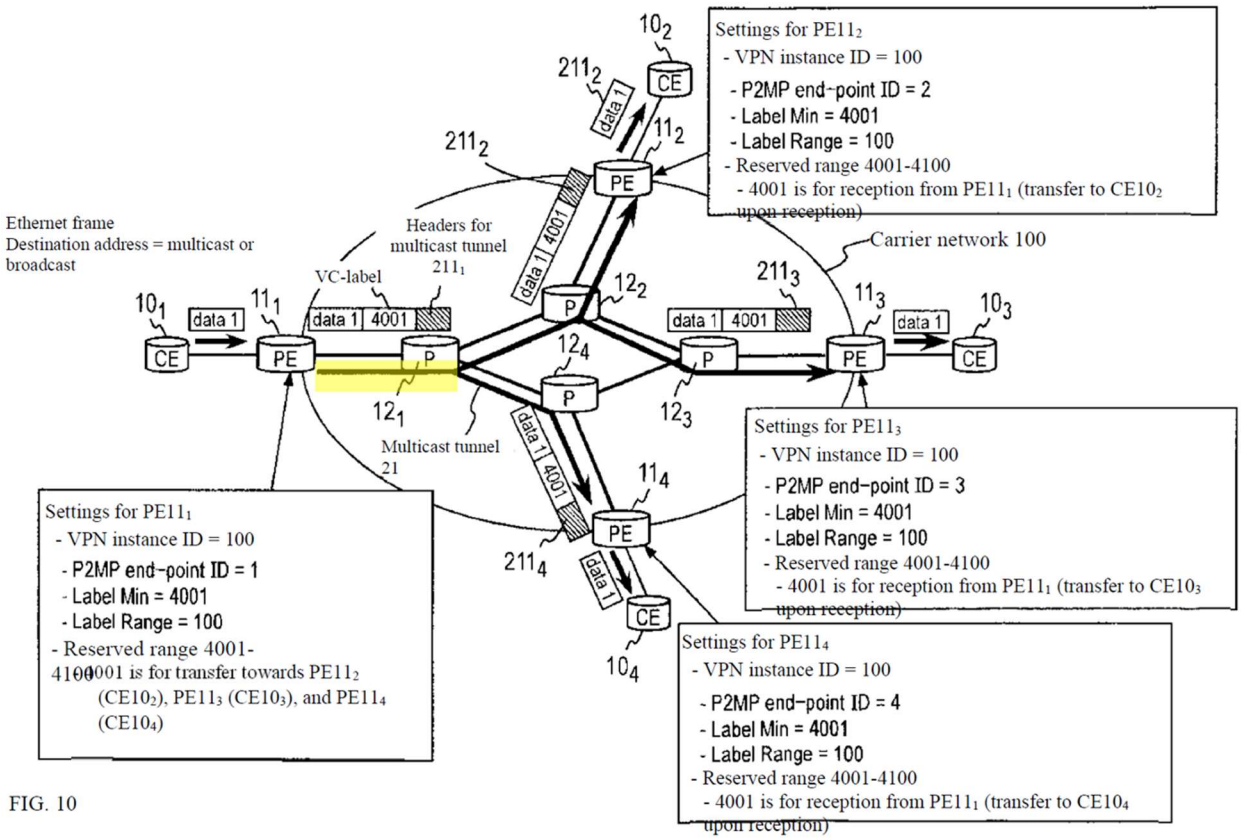

FIG. 10

Id., Fig. 10 (highlighted). Figure 10 shares this link even more efficiently by sending data across the shared link only once, when possible. *Id.*, Fig. 10; *e.g.*, *id.* ¶¶10-17. By doing so, "the traffic between $PE11_1$ and $P12_1$ could be made 1/3 that of conventionally." *Id.*, ¶7. Kamite therefore discloses that this "first link" is shared by the first and second pseudo-wires in both Figures 3 and 10. EX1003, ¶140.

Thus, Kamite and Bocci would have rendered obvious limitation 1[b] and the entire claim 1. *Id.*, ¶141.

5. Claim 6

Claim 6 is substantively the same as claim 1 except written in terms of a "computer program stored on non-transitory computer-readable medium." EX1003,

¶142. Claim 6 therefore would have been obvious for the same reasons explained above with respect to claim 1. *Id.* Petitioner nevertheless provides a limitation-by-limitation analysis below.

(a) 6[pre]: A computer program product stored on a non-transitory computer-readable medium and comprising program code instructions for implementing a method of setting up at least two pseudo-wires able to broadcast a data stream when said program is executed by a computer, the program code instructions comprising instructions for:

To the extent the preamble is limiting, Kamite and Bocci would have rendered obvious limitation 6[pre]. EX1003, ¶¶143-145.

As discussed, Kamite discloses "a method of setting up at least two pseudo-wires able to broadcast a data stream." EX1003, ¶144; *see* §VIII.B.4(a).

Kamite further discloses "computer program product stored on a non-transitory computer-readable medium and comprising program code instructions for implementing" this method "when said program is executed by a computer, the program code instructions comprising instructions for" the method. EX1035, claim 17 (claiming "[a] communication program that causes a computer to run the system or device" described in the claims). Indeed, a POSITA would have known that Kamite's routers could execute the method using program code stored on a non-transitory computer-readable medium. EX1003, ¶145. Thus, Kamite and Bocci would have rendered obvious limitation 6[pre]. *Id.*

(b) 6[a]: setting up a first pseudo-wire comprising a first link set up between an input router of a packet-switched network and an intermediate router of the packet-switched network and a second link set up between said intermediate router and a first output router of the packet-switched network; and

As discussed, Kamite and Bocci would have rendered obvious limitation 6[a]. EX1003, ¶146; *see* §VIII.B.4(b).

(c) 6[b]: setting up a second pseudo-wire between said input router and a second output router of the packet-switched network, wherein the second pseudo-wire comprises said first link and a third link set up between said intermediate router and said second output router, said first link being shared by the first and second pseudo-wires.

As discussed, Kamite and Bocci would have rendered obvious limitation 6[b]. EX1003, ¶147; *see* §VIII.B.4(c). Thus, Kamite and Bocci would have rendered obvious claim 6. EX1003, ¶147.

IX. DISCRETIONARY DENIAL IS NOT APPROPRIATE

A. Discretionary Denial Under the *Fintiv* Factors Is Not Appropriate

The Board should institute this proceeding because the relevant factors weigh against discretionary denial. Non-institution would be improper because the factors articulated in *Apple Inc. v. Fintiv, Inc.*, IPR2020-00019, Paper 11 (PTAB Mar. 20, 2020) strongly favor institution.

1. Factor 1: Whether the District Court Granted a Stay or a Stay May Be Granted If a Proceeding Is Instituted

The case is still in the early stages of litigation. Accordingly, the district court has not set any deadlines for claim construction or trial. Petitioner intends to file a motion to stay once all petitions are on file, which California courts grant liberally. *See Zomm, LLC v. Apple Inc.*, 391 F. Supp. 3d 946, 956 (N.D. Cal. 2019). This factor weighs against discretionary denial.

2. Factor 2: Proximity of the Court's Trial Date to the Board's Projected Statutory Deadline for a Final Written Decision

The district court has not yet scheduled an initial Case Management Conference. No scheduling order has yet to issue and no trial date has been set. Patent Owner stated in its opposition to Juniper's motion to transfer that "the average time to a jury trial in patent cases is 36.6 months in the NDCA." EX1038, 28-29. Thus, a written decision on this petition will issue long before any trial. This factor weighs strongly against denial.

3. Factor 3: Investment in the Parallel Proceeding by the Court and the Parties

There has been no meaningful investment by either party in the district court proceeding. The district court has not entered a scheduling order. Fact discovery has not opened and no claim construction has occurred. Indeed, there have been no substantive motions raised in the parallel district court proceeding involving the '775 patent. The early stage of this litigation weighs against discretionary denial.

4. Factor 4: Overlap Between Issues Raised in the Petition and in the Parallel Proceeding

Although the invalidity contentions that will be served in the district court litigation are likely to include prior art cited in this petition, they are also likely to include additional references and might not advance the same grounds set forth in this petition. Instituting a proceeding will allow the Board to address the art, and the issues will be narrowed in the litigation due to the estoppel provisions of 35 U.S.C. § 315(e)(2).

5. Factor 5: Whether the Petitioner and the Defendant in the Parallel Proceeding Are the Same Party

Petitioner is the defendant in the parallel district court proceeding. EX1039. This is true of most IPR petitioners. *Fintiv* does not suggest that discretionary denial is appropriate in this situation. This factor is neutral.

6. Factor 6: Other Circumstances That Impact the Board's Exercise of Discretion, Including the Merits

As shown above, the merits of the petition are strong. Further, prior art asserted in this petition was not considered during prosecution of the '775 patent. Although this is not the first petition challenging the claims of the '775 patent, the Board dismissed the other IPR on procedural grounds and did not analyze the merits. This factor weighs against discretionary denial.

B. Discretionary Denial Under 35 U.S.C. §325(d) Is Not Appropriate

The Board should not exercise its discretion under §325(d). *Advanced Bionics, LLC v. MED-EL Elektromedizinische Geräte GmbH*, IPR2019-01469, Paper 6, at 7 (PTAB Feb. 13, 2020). This analysis employs a two-prong framework: (1) whether the arguments presented in the previous action are the same or substantially the same as those previously presented to the Office; and (2) if so, whether the petitioner has demonstrated a material error by the Office in its prior consideration of those arguments. *Id.* Within these prongs, the Board considers several non-exclusive factors from *Becton, Dickinson & Co. v. B. Braun Melsungen AG*, IPR2017-015786, Paper 8 (PTAB Dec. 15, 2017).

1. Step One of Advanced Bionics

Petitioner's arguments and prior art are neither the same nor substantially the same art or arguments previously before the Office.

(a) Original Prosecution

At step one, Kamite (EX1035) was not considered or cited during original prosecution of the '775 patent, either by the Examiner, in an IDS, or on the face of the '775 patent. *See generally* EX1002. This weighs heavily against denial. *Samsung Elecs. Co. v. G+ Commcn's, LLC*, IPR2023-00441, Paper 10, at 15-16 (PTAB Aug. 3, 2023). Kamite is also materially different than the references considered and cited during original prosecution because it discloses sharing a first link between a first and second pseudo-wire, which was purportedly not found in the

prior art at issue in original prosecution. EX1002, 84-87; *see Amperex Tech. Ltd. v. Maxell, Ltd.*, IPR2021-01442, Paper 16, at 13-16 (PTAB Apr. 12, 2022) (refusing to deny institution under §325(d) because the references and asserted combination were not considered by the Examiner in original prosecution).

Bocci was cited in an Information Disclosure Statement during prosecution, but the Examiner did not consider or analyze this reference. EX1002, 71, 114, 255. The Examiner instead focused on other references, like U.S. Publication No. 2008/0175234 ("Li") and U.S. Publication No. 2008/0089227 ("Guichard"). *Id.*, 97-105. "The Board frequently holds that a reference that was neither applied against the claims nor discussed by the Examiner does not weigh in favor of exercising the Board's discretion under §325(d) to deny a petition." *Amazon.com, Inc. v. M2M Sols. LLC*, IPR2019-01205, Paper 14, at 16 (PTAB. Jan. 27, 2020) (quotation omitted); *e.g.*, *Adv. Energy Indus. Inc. v. Reno Tech. Inc.*, IPR2021-01397, Paper 7, at 7 (PTAB Feb. 16, 2022); *Cellco P'ship v. Huawei Device Co.*, IPR2020-01117, Paper 10, at 13 (PTAB Feb. 3, 2021); *Fasteners for Retail, Inc. v. RTC Indus., Inc.*, IPR2019-00994, Paper 9, at 7-11 (PTAB Nov. 5, 2019).

The Examiner briefly discussed Wainner during prosecution, but did not analyze whether Wainner taught the '775 claims. EX1002, 105-06. In a rejection, the Examiner merely indicated that Wainner was "considered pertinent to applicant's disclosure" but explicitly stated that Wainner was "not relied upon." *Id.*, 105. Thus,

Wainner was not substantively analyzed and is materially different than the considered references because it teaches sharing a first link between a first and second pseudo-wire. *See Amazon.com*, IPR2019-01205, Paper 14, at 15; *Adv. Energy Indus.*, IPR2021-01397, Paper 7, at 7; *Cellco*, IPR2020-01117, Paper 10, at 13; *Fasteners for Retail*, IPR2019-00994, Paper 9, at 7-11.

(b) Cisco IPR

At step one, Wainner, Kamite, and Bocci were not considered or cited during the previous IPR filed by Cisco that involved the '775 patent. *See generally* EX1026. In fact, the Board did not analyze the merits of Cisco's IPR petition, denying the petition on procedural grounds because the district court litigation was in an advanced stage. EX1028, 17.

(c) EPR

At step one, Kamite was not cited or analyzed during EPR. *See generally* EX1008. Wainner and Bocci were cited in IDSs, but the Examiner did not substantively analyze or consider these references. *Id.*, 18-20, 34-36, 151-52, 154-55. For the same reasons discussed above, these references were not analyzed, and they are materially different than the considered references. *See* §IX.B.1(a).

2. Step Two of Advanced Bionics

Because Petitioner presents new arguments and combinations in this petition, it is unnecessary to analyze step two. However, even if the same or substantially the

same art was previously presented to the Office somehow, the Examiner made material errors in evaluating the art.

(a) Original Prosecution

There is no reason to proceed to step two because Kamite was not even cited during prosecution, and although Bocci was cited in an IDS and Wainner was briefly discussed, they were never analyzed by the examiner. *See* §IX.B.1(a).

Regardless, the Office materially erred in its decision. A lack of "any evidence showing discussion or application of the previously presented reference by the Examiner during prosecution" weighs against denying institution, especially if the petitioner "show[s] the Office erred by overlooking something persuasive." *Quasar Sci., LLC v. Colt Int'l Clothing, Inc.*, IPR2023-00614, Paper 8, at 7-8 (PTAB Oct. 12, 2023). The Examiner materially erred by not substantively analyzing Wainner, Kamite, and/or Bocci, which teach the challenged claims. The Board has previously determined that examiners materially err when references are cited in an IDS but not materially considered in a rejection or allowance. *See, e.g.*, *Halliburton Energy Servs., Inc. v. US Well Servs., LLC*, IPR2021-01538, Paper 9, at 15 (Mar. 16, 2022); *Cellco*, IPR2020-01117, Paper 10, at 12-13; *see also* §IX.B.1(a) (citing cases). Indeed, the fact that an asserted prior art reference "was not the basis of rejection" or approval weighs strongly against exercising discretion under §325(d). *Cellco*, IPR2020-01117, Paper 10, at 13.

(b) Cisco IPR

There is no reason to proceed to step two due to the lack of substantive analysis in the final written decision. Regardless, the Office materially erred by not considering Wainner, Kamite, and/or Bocci.

(c) EPR

There is no reason to proceed to step two because Kamite was not even cited during prosecution, and although Bocci and Wainner were cited in IDSs, they were never analyzed by the examiner.

Regardless, for the reasons discussed above, the Office materially erred in its decision by not analyzing Wainner, Kamite, and/or Bocci, which teach the challenged claims. *Quasar Sci.*, IPR2023-00614, Paper 8, at 7-8; *e.g.*, *Halliburton Energy*, IPR2021-01538, Paper 9, at 15; *Cellco*, IPR2020-01117, Paper 10, at 12-13.

X. CONCLUSION

For the foregoing reasons, Petitioner asks that the Patent Office order an *inter partes* review trial for claims 1 and 6 of the ’775 patent and then cancel these claims as unpatentable.

Date: February 8, 2024

By: */s/ Todd M. Briggs*
Todd M. Briggs
Quinn Emanuel Urquhart & Sullivan, LLP

Attorney for Petitioner Juniper Networks, Inc.

CERTIFICATE OF WORD COUNT

Pursuant to 37 C.F.R. §42.24(d), Petitioner hereby certifies, in accordance with and reliance on the word count provided by the word-processing system used to prepare this Petition, that the number of words in this paper is 13,797. Pursuant to 37 C.F.R. §42.24(d), this word count excludes the table of contents, table of authorities, mandatory notices under §42.8, certificate of service, certificate of word count, appendix of exhibits, and any claim listing.

Respectfully submitted,

Date: February 8, 2024

By: */s/ Todd M. Briggs*
Todd M. Briggs
Quinn Emanuel Urquhart & Sullivan, LLP

Attorney for Petitioner Juniper Networks, Inc.

CERTIFICATE OF SERVICE

The undersigned certifies service pursuant to 37 C.F.R. §§ 42.6(e) and 42.105 on the Patent Owner on a thumb drive by Federal Express of a copy of this Petition for *Inter Partes* Review and supporting materials at the correspondence address of record for the '775 patent:

90471 - Heim, Payne & Chorush, L.L.P.
609 Main St., Suite 3200
Houston, TX 77002
UNITED STATES

175872 - NOBLITT & NEWSON, PLLC (Acacia)
Daniel J. Noblitt
8777 NORTH GAINEY CENTER DRIVE, STE.175
Scottsdale, AZ 85258
UNITED STATES

DATED: February 8, 2024

Respectfully submitted,

By *__/s/ Todd M. Briggs__*
Todd M. Briggs

QUINN EMANUEL URQUHART & SULLIVAN, LLP
555 Twin Dolphin Drive
Redwood Shores, CA 94065
Tel: (650) 801-5000
Fax: (650) 801-5100

Attorney for Petitioner Juniper Networks, Inc.