N72-22519

FINAL REPORT

on

NASA Grant NGR 21-002-211

Sub-Nanosecond Ranging Possibilities of Optical Radar at Various Signal Levels and Transmitted Pulse Widths

Submitted to the National Aeronautics and Space Administration

by

Sherman K. Poultney

30 December 1971

Technical Report No. 72-075

CASE FILE COPY

UNIVERSITY OF MARYLAND
DEPARTMENT OF PHYSICS AND ASTRONOMY
COLLEGE PARK, MARYLAND

DISH 1011

This is a preprint of research carried out at the University of Maryland. In order to promote the active exchange of research results, individuals and groups at your institution are encouraged to send their preprints to

PREPRINT LIBRARY
DEPARTMENT OF PHYSICS AND ASTRONOMY
UNIVERSITY OF MARYLAND
COLLEGE PARK, MARYLAND
20742

U.S.A.

FINAL REPORT

on

NASA Grant NGR 21-002-211

Sub-Nanosecond Ranging Possibilities of Optical Radar at Various Signal Levels and Transmitted Pulse Widths

Submitted to the National Aeronautics and Space Administration

by

Sherman K. Poultney
Department of Physics and Astronomy
University of Maryland
College Park, Maryland 20742

30 December 1971

Technical Report No. 72-075

Abstract

Satellite ranging with pulsed laser radar systems to sub-nanosecond accuracy is possible with currently available system components. This study is specifically concerned with the behaviour of the photomultiplier, the method of time derivation of the photomultiplier output pulse and its relation to the reflected light pulse width and amplitude, and the calibration of range precision and accuracy. All other system components including satellite are assumed to be optimized so that they do not limit ranging. Atmospheric range corrections are assumed to be determinable. Pulsed laser radars with light pulse widths of 30, 3, and 0.1 nsec are considered with the 0.1 nsec system capable of highest precision in several modes of operation; including a high-repetition rate, single photoelectron reception mode. The 3 nsec system is probably best operated in a manner similar to ones now used for 30 nsec systems and is capable of sub-nanosecond range precision if amplitude changes are kept below 100 to 1 and if the reflected light return is high enough to minimize pulse shape variation. Range accuracy is best obtained with identical start and stop channels operating at the same light level. The high repetition rate, short light pulse systems are most easily operated in this manner. An alternate calibration scheme using a fast, triggerable light pulser is described in detail.

TABLE OF CONTENTS

Page No.

I. Introduction 3

II. Conversion of Light Signal to Electrical Signal. 8

A. Efficiency 8

B. Gain Fluctuations 8

C. Timing Limitations 9

III. Time Derivation 12

A. Large Amplitude, Constant Return 12

B. Large Amplitude, Fluctuating Return 12

C. Weak Amplitude, Fluctuating Return 13

D. Single Photon Returns 14

E. Conclusions 15

IV. Calibration of Precision and Accuracy of Ranging System 17

A. Introduction 17

B. Test Light Pulse Production 18

C. Measurement of Timing Precision of Start and Stop Channels . . 20

D. Time Interval Calibration 23

V. High Data Rate Communication Channel 25

References 26

Figure Captions and Figures 29

Appendix I: Publications Partially Supported by NGR 21-002-211. . . . 33

Appendix II: Description and Operating Instructions for the Maryland Light Pulser. - C. Steggerda

I. Introduction

Satellite range measurements using pulsed laser radar systems[1,2,3] consist of a number of component steps. First, the laser pulse must be generated and transmitted. For the low repetition rates of conventional pulsed systems ($\leq$ 1 pps), the laser pulse must be bright enough to produce a detectable return from every pulse. The laser pulse width in conjunction with the fluctuation of the return in shape and amplitude currently determine the precision of ranging. Laser systems with pulse widths from 3 nsec to 30 nsec are now available and ones with pulse widths of 0.1 nsec will soon be available. The shorter pulses typically have less energy and larger spectral width (e.g. 0.1 nsec corresponds to 0.02 Å or greater at 6943 Å depending on pulse structure), but still will be accepted by available narrow pass-band filters (e.g. 0.7 Å).[4,5] It is assumed that the laser output is constant in shape and amplitude.[5,6,7] Second, structure in the far-field pattern of the laser[8] and scintillation in the atmosphere will cause fluctuations in the return. The latter fluctuations may increase with zenith angle. It is assumed that the laser is operated at a fixed wavelength far from atmospheric absorption lines[4] and that the index of refraction of the atmosphere at the time of ranging can be determined either by auxiliary measurements[9] or by two wavelength ranging along the same path. The latter systematic range correction may begin to limit range accuracy at about the 0.1 nsec level.[10] Third, the satellite must intercept the beam and reflect sufficient light to produce a detectable return. Poor positioning of reflectors combined with tumbling of the satellite will also cause a fluctuation in the return and even a geometric limit to ranging precision at the worst. It is assumed that this target depth is eliminated by proper design (1 m ~ 3 nsec) or by suitable calibration. The varying range, R, of the satellite will cause a

systematic change in return amplitude with zenith angle since the return is theoretically a function of R^4. Zenith angles of 75°, 60°, and 45° for a satellite of 1000 km altitude mean return changes of 1/37, 1/16, and 1/4 respectively which could cause systematic range errors at the arrival time derivation unit.[1,2] This systematic change if it is greater than the random fluctuations could be minimized by laser output amplitude or beam divergence control. Fourth, the return should be collected and processed by a suitable receiver with the appropriate spatial and spectral filtering for background noise reduction.[4] Fifth, this processed light return (as well as a sample of the output pulse) must be converted into an electrical signal by means of a photodevice with suitable spectral and time responses. The mode of operation of the photodevice will depend directly on the nature of the return signal and the method of time derivation used on the electrical signal. The basic time limitation of most photomultipliers is the fluctuation in arrival time of the anode pulse (i.e. transit time fluctuation) which can be less than 100 psec for multiphoton returns (e.g. 1000).[11] As the number of return photons decrease, the statistics of light reception and photoelectron conversion will cause output pulses shape distortions from the photodevice. The weak return, wide laser pulse case gives the most violent fluctuations[9,13] and is best compensated by going to the single photoelectron mode of detection.

The sixth component of satellite range measurements with pulsed laser radar is the derivation of the time of the electrical signals corresponding to the laser output pulse and the laser return pulse. If the light pulses are constant in shape and amplitude (as is common for the laser output pulse), time derivation can be accomplished by using a leading-edge timing discriminator and may be as precise as tens of picoseconds.[11] If the return

amplitude fluctuates, the arrival time derived by the leading-edge discriminator will show the walk effect which depends on the fractional fluctuation and the rise time of the pulse in the first approximation.[11] Amplitude fluctuations of the return are common due to the various causes outlined above. The fluctuations can be compensated for either by adding one of the common compensation techniques to leading-edge time derivation[11] or by using another time derivation technique.[11,12] One of the most successful of these alternate techniques is the constant-fraction-of-pulse-height timing discriminator which can operate over a 100:1 fluctuation range with a time walk of less than ± 120 psec. It can also be extended to wider amplitude fluctuations and to correction of walk due to pulse risetime fluctuations. Both of the above derivation techniques will suffer if drastic changes of pulse shape occur. These changes are most severe with weak returns and the longer laser pulses.[9] Typical photomultiplier responses range from 0.2 to 5 nsec wide and so cause the weak return signal to break into multiple pulses within the laser pulse width (e.g. 30 nsec). A number of compensation techniques have been developed including peak amplitude compensation of systematic range-zenith angle changes and photographic compensation of each distorted pulse shape,[13] but the most direct approach to better range precision is to use a shorter-pulse laser. Even for the shortest laser pulse and photomultiplier impulse response, however, the walk effect can still cause large imprecision. For a fairly large return (e.g. 1000 photons), time derivation with a constant-fraction-of-pulse-height will be limited by the residual walk of ± 120 psec in that discriminator. For weak returns (either natural or purposely attenuated) of about a single photoelectron per firing, the walk effect is much diminished leaving the single electron transit time fluctuation in the photomultiplier (at best ± 130 psec) as the basic limitation to timing precision.[11] In fact, for the 0.1 nsec laser pulse, it is advisable to use the single photoelectron mode

to accomplish total compensation of return pulse fluctuations. The return rate must be high enough to provide a satisfactory data rate which means laser firing rates of 1 to 10 pps. Single photoelectron ranging to sub-nanosecond precision is currently being done in the Lunar Laser Ranging Experiment.[14] Use of the single photoelectron technique for the 3 nsec or larger pulses requires a high enough return rate to reconstitute the laser pulse width at the same time as the satellite orbit radius is being determined and so requires an even higher pulse repetition rate.

The seventh component of precision satellite ranging is the measurement of the time interval between the laser output time and the return pulse time as derived above. One of the most versatile and accurate methods is the combination of digital and analog measurements currently used in the Lunar Laser Ranging Experiment (see Fig. 1) for non-multiplexed operation.[15,16] High repetition rate laser systems (e.g. 100 pps) which require multiplexing would work better with a time interval measurement that measures the clock time of the departure and arrival of each light pulse. Such a system is under development for the Lunar Laser Ranging Experiment.[17] The eighth component is on-line storage and analysis of the time interval information[18] in conjunction with the actual time of laser firing to an accuracy of a few μsec.[3] Finally, the ninth component is a calibration procedure which allows a determination of the precision and accuracy of the range measurement. This last step has been approached by ranging to fixed targets by satellite rangers[1,2,13] and by internal light signal schemes by lunar rangers.[3,5,6,7,15]

This study is concerned specifically with the behaviour of the photomultiplier which converts the light to an electrical signal at highest efficiency and with minimum loss of time information, the method of time

derivation of this electrical pulse and its relation to the return pulse width and amplitude, and the calibration of the range precision and accuracy. All other system components are assumed to be optimized so that these three components are the factors limiting the satellite ranging operation. A brief section is also included on the different photodevice requirements for a high data rate communication channel.

II. Conversion of Light Signal to Electrical Signal

The conversion of the return light signal to an electrical signal is done by a suitable photodevice. This photodevice should have a maximum quantum counting efficiency at the wavelength of operation, a minimum gain fluctuation due either to multiplier statistics or anode saturation, and adequate timing capabilities. Two of the modes of operation of the photodevice that will be considered are the single photoelectron mode and the large signal mode.

A. Efficiency

The efficiency of conversion for large signals is primarily limited by the quantum efficiency of the photosurface of the photodevice. New materials are making efficiencies of 20% or more available over a wide spectral range;[11] mainly with opaque surfaces. Quantum efficiency enhancement techniques can be used with transmission-type photosurfaces to increase their efficiencies at longer wavelengths.[19] At low light levels such as the single photoelectron mode, additional inefficiencies enter such as the loss of photoelectrons which fail to enter the multiplier and the loss of electrons in the multiplication process. The total quantum counting efficiency then becomes important and should be measured for the photodevice under consideration; especially if it is a new type.[11,20] Total efficiencies of 80% or more of the photosurface efficiency are typical.

B. Gain Fluctuations[11]

Gain Fluctuations in the single photoelectron mode are due to the statistical secondary electron emission processes in the multiplier. They manifest themselves as an impulse response with varying amplitude. This varying amplitude will cause walk at the time derivation unit just as a

variation in return amplitude will. New materials are now available for use in the multiplier and yield fractional fluctuations as low as 0.4. The relative amplitude fluctuation ε_A is given by

$$\varepsilon_A^2 = g/(g - 1)g_1 \tag{1}$$

where g_1 is the gain of the first dynode and g is the gain of any one of the remaining dynodes. Gain changes in the large signal mode are due to space charge and other saturation effects in the final stages of the multiplier. These changes can distort the return pulse and cause a timing delay which depends on the return pulse amplitude. Although photodevices are available with quite large output pulse capabilities, it is advisable to design the complete ranging experiment including satellite to operate efficiently with a range of return pulses which vary less than 100 to 1. If this design is not carried out, one may have to settle for imprecise ranges for the unfavorable parts of the satellite trajectory.

C. Timing Limitations[11]

The timing limitation of the photodevice in the single photoelectron mode can be approximately described by the transit time fluctuation ε_{PH} given by

$$\varepsilon_{PH}^2 = \varepsilon_{KS1}^2 + \varepsilon_{S1S2}^2/g_1 + \varepsilon_{ss}^2/g_1(g - 1) \tag{2}$$

where ε_{KS1}, ε_{S1S2}, ε_{SS} are the transit time fluctuations in the photocathode-first dynode, first dynode-second dynode, and dynode-dynode regions respectively. The best ε_{PH} measured thus far is $\pm$ 130 psec for the RCA 70045 and RCA C31024. Improved photodevices are becoming available due to alternate designs and the new materials. However, one of the most promising designs (e.g. ε_{SS} = 10psec),

the crossed-field photomultiplier, is being built solely for the large light signal mode. If the light pulse width is less than the impulse response of the photodevice, ε_{PH} is the sole photodevice time limitation. If light signals larger than single photoelectron ones are available within the width of the impulse response of the photodevice, the ε_{PH} is reduced by $\sqrt{m}$ where m is the number of photoelectrons received. The fast photomultipliers mentioned above have impulse responses of about 1 nsec. With light pulses this short or shorter, the photodevice timing limitation in this second mode is considerably reduced compared to the single photoelectron mode. For large enough light signals (e.g. 400 photoelectrons), the Sylvania 502 Crossed-Field photomultiplier (Gain ~ 10^4) can probably be used to great advantage. However, a wide range of amplitude may cause serious walk at the time derivation circuit as discussed below.

A third photodevice mode is the receipt of several photoelectrons spread out over a light pulse width greater than the impuse response of the photodevice. Here the electrical signal can have a highly distorted shape.[13] Methods of time derivation used to compensate for this distortion are discussed below. An optical compensation method consists of attenuating the light signal so that only a single photoelectron is detected per laser firing. This method is more effective as the laser pulse width decreases from 30 nsec since this width must be reconstituted as the satellite orbit is being determined. The easiest means of accomplishing single photoelectron detection is to attenuate the return (e.g. by reducing laser output so that only one return is obtained per every ten laser firings). This attenuation eliminates the systematic range errors caused by timing to the first of several photoelectrons; but does greatly increase the necessary laser firing rates. However,

a photomultiplier with very small gain fluctuations (e.g. RCA 8850) can be used to select single photoelectron events from the pulse height spectrum of the return pulses and is at an optimum at about a 37% discard ratio. The same high-resolution photomultiplier can be used in conjunction with a known light pulse shape to time the first photoelectron without systematic bias in the presence of two or more extra photoelectrons.[21] The inherent time limitation is then just the ε_{PH} (e.g. 130 psec) where it has been assumed that the electrical pulse from the photodevice fluctuates only in amplitude.[22] The practical time limitation is the necessary reconstitution of the wide laser pulse which requires a laser firing rate dependent roughly on the square of the ratio of laser pulse width to photodevice impulse response. A 1 nsec photodevice and a 3 nsec laser pulse would mean a firing rate of about 10 pps or more.

The fourth photodevice mode is the receipt of a large light signal over a light pulse width greater than the impulse response of the photodevice. At best, the electrical output signal has only a varying amplitude and can be compensated over a limited amplitude variation (e.g. 100:1) by suitable time-derivation techniques. More serious would be a systematic amplitude change with satellite range. Most serious are the changes in pulse shape due to a low number of photoelectrons per impulse response interval of the photodevice. The weaker the return signal, the more distorted the output pulse becomes.

III. Time Derivation

The process of deriving an arrival instant from the electrical pulse of the photodevice can introduce ranging errors. Three basic time derivation methods are discussed; leading-edge timing discriminator, constant-fraction-of-pulse-height timing discriminator, and various smoothing derivation processes. The discussion which follows, however, is structured in terms of the types of light signals received as introduced in Section II.

A. Large Amplitude, Constant Return

A large ampltide return with constant amplitude can be detected by a leading-edge timing discriminator with very little timing jitter (e.g. 10 psec). The lower the light level of a return, with width less than the impulse response, the more the gain fluctuations become. The fractional gain fluctuation for single electrons, ε_A, is given by (1) and is decreased by the square root of the number of photoelectrons. The walk of leading-edge timing due to the gain fluctuations is discussed in III.B. The statistics of conversion of photons to photoelectrons further increases the amplitude fluctuation for signals greater than a single photoelectron.

B. Large Amplitude, Fluctuating Return

A large return may fluctuate in amplitude due to physical processes such as illumination scintillation, satellite tumbling, etc. or may change in a systematic way due to range variations. Time derivation with leading-edge timing discriminator is then subject to the walk effect. The arrival time walks back and forth depending on the pulse amplitude.[11] A rough estimate of the magnitude of the walk for small dynamic ranges is given by

$$\varepsilon_t = \varepsilon_A T_r \tag{3}$$

where the rise time of the pulse, T_r, is assumed to be nearly linear in the region of pulse height selection and where the dynamic range is expressed as ε_A (i.e. $\varepsilon_A = 2$ for a uniformly-populated 10 to 1 range). Thus, one needs short rise time light pulses and short rise time photodevices if leading-edge discriminator is to be used. Walks for a wider dynamic range of returns with a Gaussian shape are tabulated.[13] In the case of single photoelectron returns within a light pulse less than or equal to the impulse response time of the photodevice, ε_A is given by (1) and is 0.4 at best with RCA high gain first dynode photomultipliers.

One method of walk compensation is the use of a constant-fraction-of-pulse-height timing discriminator (e.g. Ortec 453).[32] This discriminator is capable of operation over a 100:1 pulse amplitude range with a walk less than ± 120 psec for the large amplitude light signals. Its dynamic range can be extended by using several units in parallel and it can also be adjusted to compensate for walk due to rise time fluctuations. It is also effective for the single photoelectron, short light pulses although apparently insensitive to the particular triggering fraction used. Other methods of walk compensation are discussed below in III.C.

C. Weak Amplitude, Fluctuating Return

One of the most troublesome situations with the older 30 nsec light pulse, fast photodevice ranging systems was the prevalence of weak returns. These returns yielded an electrical pulse of highly non-uniform shape. Both of the above time derivation techniques would then be subject to an unknown random error and a systematic bias to short ranges by a time characteristic of a fraction of the light pulse width. Compensation techniques consisted of various shaping procedures. The simplest would be to integrate or otherwise

process the fast photodevice electrical signal in an optimum filter network.[23] This approach would be especially convenient from the data processing viewpoint. Donati, Gatti, and Svelto[23] review this approach with respect to the similar problem in scintillation spectrometry. The author has not evaluated this simple approach, but suggests it be done patterned after IV.C. The most complicated technique would be the photographing of the actual electrical outputs and the later fitting of the best centroid to each pulse.[13] The distance of the centroid from a superimposed clock pulse would provide the range correction. The SAO group[13] tested this compensation method with a fixed target at about the 30 photoelectron level with a laser pulse width 30 nsec. A significant systematic range error was found about equal to the pulse width. Present estimates yield an accuracy of about 3 nsec. The satellite returns fluctuate between firings more than the systematic range variation and so it is unclear whether or not the accuracy changes with zenith angle.

It is clear that one should install the shorter pulse laser to improve the ranging accuracy. The ratio of return signal to pulse width should be equal to or greater than the 30/30 ratio for the long pulse laser discussed immediately above. A greater ratio places one in the mode of III.B. Compensation by attenuating the single photoelectron levels is discussed in II.C. and III.D.

D. Single Photoelectron Returns

Single photoelectron returns have been discussed in II.C. with respect to 0.1 nsec pulses for the third photomultiplier mode. In all cases, the ε_{PH} is at best $\pm$ 130 psec and the walk problem is substantially overcome. However, the loss of data due to natural fluctuations in satellite return may be serious; especially if the laser system operates at too low a firing rate.

E. Conclusions

The optimum ranging system would employ a 0.1 nsec pulse-width laser system and one of the fastest available photomultipliers (e.g. RCA C31034 or a high gain crossed-field photodevice) operated so as to yield multi-photoelectron signals (e.g. 100). Single photoelectron signals might better be detected with an improved RCA C70045. Larger signals (e.g. > 400) might better be detected with the moderate gain crossed-field photomultiplier (e.g. Sylvania 502). Other fast detectors are discussed by Poultney.[11] However, the timing precision limit is probably at about 0.1 nsec level due to either walk at the time derivation unit, photodevice transit time fluctuation, logic processing or laser pulse width. Large random or systematic return ampltide changes will still require compensation techniques. The author believes the single photoelectron technique is here the best compensation technique. It does require a higher firing rate (e.g. 10 pps) in order to maintain a good return rate (e.g. 1 pps), but need not operate at very high energies (e.g. 10 to 100 mJ) per pulse. The return data rate can be increased almost an order of magnitude by adding post detection selection as noted above.

The next most precise system would employ the 3 nsec pulse width laser systems in conjunction with the above mentioned photodevice. Ranging with large returns would be limited again by amplitude fluctuations and changes; probably 0.1 to 0.2 nsec for 100 or 1000:1 changes. Weak returns are subject to the same shape fluctuations that 30 nsec returns are. However, a higher number of photoelectrons per impulse response time can be attained with the 3 nsec pulse making a shaping network useful at the nsec accuracy level. The photographic centroid compensation technique used for these weak returns in the case of 30 nsec pulses can be used at a cost of more data processing.[13]

The single photoelectron compensation technique here requires the higher repetition rate laser both because of the necessarily lower return and because the centroid of the 3 nsec pulse must be found statistically and in a bootstrap process similar to that used in the Lunar Laser Ranging Experiment. As many as 100 single photoelectron returns would be needed before the satellite changed its range significantly (actually or due to orbit uncertainty) to obtain an 0.3 nsec range precision. Such a firing rate would certainly mean multiplexing the start and stop ranging times. One scheme for such multiplexing is now being developed at the University of Maryland.[17] Despite this development which is also useful for the 0.1 nsec laser system, it appears that the 3 nsec laser system should be operated at high levels with suitable walk compensation in the time-derivation units of the detector.

IV. Calibration of Precision and Accuracy of Ranging System

A. Introduction

Ranging systems are best operated for accurate measurements using identical start and stop channel photodevices and time derivation units and similar start and stop light signals. Calibration of range interval can then be done using standard electrical signals with known time interval separations close to the actual ranges. Present ranging systems do not operate in this mode due to noise at the time of laser firing,[3] to the different nature of the start and stop light signals, or other problem. The next best calibration procedure would be the use of test light signals of the same character as those sent and received and with known time interval separations close to the actual ranges. Satellite ranging systems have been calibrated by ranging to a fixed target at a known distance.[1,2,13] This method takes into account some of the atmospheric fluctuations, but the range (e.g. 1 km) is usually significantly shorter than satellite ranges. The laser output pulse is attenuated to yield returns typical of satellite illumination. With this method, one can study the timing precision of the return channel for various return levels and fluctuations, with various photodevices, and with various time derivation methods.[1,13] One can also find the characteristic range correction caused by the net time delays in start and stop channels if the optical distance to the passive target is known. Satellite ranging systems are also checked for internal consistency by examining the statistical behaviour of individual ranges during a pass[24,2] for accuracy by comparison to other geodetic tracking instrumentation,[24] for precision by comparison to a collocated laser radar system of independent construction,[2] and for accuracy by comparison of long term orbital determinations (n.b. gravity field model may not be known to

sufficient accuracy).[2] Accuracy and precision is currently thought to be about 1 m or about 3 nsec. Due to the presence of laser firing noise in the present experimental configuration, the lunar ranging system is calibrated by test light pulses which have exact time separations of the same order as lunar ranges and which have similar shapes and amplitudes.[3,5,6,7,15] The Lunar ranging systems are not usually capable of viewing a close target (or even a satellite). Precision of start and stop channels and its dependence on signal level, photodevice, and time derivation method are best studied in only that channel.[5,6,7,26] Range precision can also be checked by examining the individual ranges during a pass. At present, this range precision is 1 nsec or less after allowance for reconstituting the laser pulse width of 4 nsec. The signal return level in lunar ranging is typically one photoelectron and the data rate is about 20% of the 20 ppm laser firing rate.

B. Test Light Pulse Production.

The generation of test light pulses by means of ranging to a fixed target at a known distance has been discussed in IV.A. Two other types of light pulse generators are considered here; a triggerable light-emitting diode for general calibration and a Cherenkov source for studying the precision of one of the start/stop channels in the sub-nanosecond region. A review of these and other more impractical light sources is given by Poultney.[11] The light emitting diode is commonly used in a free-running mode for evaluating the timing precision of photodevices and time derivation methods.[25,26] One convenient source of electrical pulses is the Tektronix 109 pulser which can supply 3 nsec and shorter pulses of suitable shape with a Monsanto MV10B diode. For longer pulses, one can better obtain suitable shapes using a PEK TR118 point contact junction lamp and a Huggins 961D Kilovolt nanosecond pulse generator

or using a conventional fast fluorescent lifetime light pulser. The Tektronix pulser provides electrical pulses as short as 0.5 nsec (FWHM), and correspondingly light pulses somewhat longer at 0.7 nsec.[25] Somewhat shorter pulses can be obtained from the light emitting diode by driving it with an avalanche transistor in a suitable circuit.[26,27] The Maryland pulser[27] provided light pulses as short as 0.45 nsec.[25] The Berkeley pulser[27] provided electrical pulses 0.4 nsec wide and light pulses as short as 0.34 nsec using an XP22 diode. The advantages of a triggerable light pulser are twofold. First, data rates for single channel timing precision studies proceed at an order of magnitude improvement over the Tektronix pulser. Second, the light pulse can be produced at the beginning and end of a given time interval for time interval calibration purposes as discussed in IV.D. In all cases, the amount of light in a pulse can be changed either by using optical attenuators or by changing the diode bias voltage. The above light-emitting diodes will not be fast enough for 0.1 nsec work. It may be possible to use laser diodes with 0.2 nsec risetimes for this work.

Light pulses as short as 0.1 nsec can be generated by making use of Cherenkov radiation. This radiation is produced by fast charged particles (e.g. β-rays from a radioactive source) traversing a transparent medium. The light pulse width is limited by path differences or dispersion in the radiator which are probably less than 30 psec. Scarl and Present[28] used one in the evaluation of the relative merits of the RCA 8575 and RCA C31000F. This source can only be used for testing the timing precision of start and stop channels. Its intensity is best changed by optical attenuation. A Cherenkov light source was designed by D. Currie and S. Poultney after discussion with Scarl[29] and constructed with several new features. A light-tight box with easy access was designed to divide the Cherenkov beam between two photomultipliers at right angles to each other.

The divided beams could be focused to small spots at the photocathode position and steered to the position desired on the photocathode. The Cherenkov radiator was designed to yield a parallel beam of light which would strike the beam divider. Details of the designs along with the performance of the light source are discussed by Currie and Liewer in their report which will appear separately. This Cherenkov light source will be an important tool in improving the evaluation of the timing capabilities of photodevices and time derivation methods.

C. Measurement of Timing Precision of Start and Stop Channels

Measurements of short time intervals characteristic of present timing precisions of start/stop channels of an optical radar are conveniently made with devices called time-to-pulse-height converters (TPHC).[11] The TPHC is essentially a linear ramp that is started by a standard sync pulse and stopped by the standardized pulse of interest. The output of the device is an analog signal directly proportional to time between standard pulses. This output can be displayed on a pulse height analyzer for purposes of analyzing the variation in the time interval being measured. A TPHC like the Ortec 437 A works over a 50 nsec to 8 μsec range to a precision of about 0.1%. Thus, on the lowest setting a time variation of 50 psec can be resolved. A Time Interval Meter would have to count clock pulses at a rate of better than 20 GHz to duplicate this resolution. One must, of course, calibrate the TPHC in the region of operation. For the purpose of time resolution measurements an approximate, insertable delay in either stop or start line will calibrate the TPHC. A typical delay is a 4 nsec cable. More accurate calibration procedures for ranging purposes are discussed by Steggerda[15] and Poultney.[5,6,7] Figure 2 gives a typical circuit for timing precision measurements. As a matter of fact, these are the same TPHC's that are used in conjunction with a digital time interval meter to obtain the

sub-nanosecond precision and accuracy in the Lunar Ranging Experiment.[14,15] (see Figure 1).

The standard pulses for the TPHC are provided by an electrical sync from the diode pulser and by the output of the photodevice time derivation unit. For single photoelectron studies, the light pulse of the desired width is suitably attenuated by optical means while the sync signal is left as is. Typical circuits and results for a variety of photodevices and time derivation units are discussed by Poultney[11] as is verification of operation at the single photoelectron level. The results quoted in IV.A. for the light pulse width were actually the widths of time resolution curves and were measured in this manner. The Maryland results were obtained with an RCA C31000F and an Ortec 270 constant-fraction-of-pulse-height time derivation unit. The Berkeley results were obtained with an RCA C31024 and Chronetics instrumentation.

The random decay of the radioactive source prevents the direct derivation of an electric synchronizing pulse with the Cherenkov light pulser. Two light detectors must then view the Cherenkov medium. If one of these can be operated at the high light level, it can be used to supply a stable sync pulse to the TPHC and so lead to the same type of time resolution curves about with the diode pulser. If the only low light levels are available, the resultant time resolution curve is a convolution of the time resolutions of each channel.[28,29] Measurements on the RCA 31000E by Scarl[28] were in substantial agreement with those by Lakes and Poultney[25] for single photoelectrons. Currie and Liewer used this Cherenkov light pulser to study the resolving time of a new type photodevice, the channel photomultiplier.

The TPHC can itself be roughly calibrated by inserting a delay cable in either the stop or start channel and observing the displacement of the timing peak on the display device. Use of the TPHC in the Lunar Ranging Experiment as an integral part of the time interval system requires a more elaborate calibration. The basic clock rate of 5 MHz is multiplied by four and passed through a level discriminator to give a standard pulse at a 20 MHz rate. Successive pulses separated by 50 nsec will start and stop the TPHC. The time delay generator of Figure 3 can be used to select multiples of the 50 nsec interval. Steggerda[15] describes a technique for interpolating between these intervals by using a pre-calibrated family of delay cables and Poultney[5,6,7] further describes their use.

The calibrated TPHC can be used to determine separately the electrical time delays in the start and stop channels to fair accuracy. The stop channel delay can be determined to within the unknown time delay (<1 nsec) in the light-emitting diode with the circuit of Figure 2 and known delay auxiliary cables in the sync line. A similar procedure could be used in the start line if the start photodevice is sensitive enough. If it is not, one must use electrical pulses which leaves the start channel uncertain to the amount of uncertainty in the delay in the photodiode (< 1 nsec). The author advises using the same photodevice for start and stop channels if possible. Otherwise, one must use some bridging process to span the great range in light intensities.[3,5,6,7]

Measurements with other than single photoelectrons and with various photodevices and time derivation units are also desired. For these measurements, the appropriate light pulse width is selected and the amplitude and its fluctuation controlled by optical attenuators in order to imitate the

return pulse from the target. The stop channel has been discussed fully in the preceding text. Here, some consideration is given to the start channel. The nature of the laser pulse, the type of photodevice, and the time derivation unit are all important. It is normal to divide off a small portion of the outgoing laser beam using a beam-splitter, to detect the light using a fast vacuum photodiode, and to derive the start time with a leading edge discriminator. This last practice is poor since the amplitude of the laser output may fluctuate and the light reaching the photodiode may systematically change with time. These potential range errors can be minimized by using a zero-crossing or constant-fraction-of-pulse-height discriminator with a standard shape laser pulse. If the shape is not standard and the pulse width not less than the precision required, one may have to resort to the photographic method of time derivation. The photodiode is a convenient device to use to obtain the start electrical signal, but it is an impediment to a local time interval calibration method. The laser pulse itself can have certain structure that would affect the range precision.[30] Conventional Q-switch ruby lasers are known to produce pulses with different time dependences depending on where in their cross-section they are viewed. Light from the spatial edge of a pulse can trail the spatial center by 3 or more nsec. Conventional Q-switch ruby lasers can also modelock and produce an output with very high frequency oscillations, but these would probably not affect the start time.

D. Time Interval Calibration

The ideal ranging system would have identical start and stop channels as mentioned above and so would need only a calibration using standard electrical pulses separated by a known interval. A multiple purpose calibration circuit[14,15]

is shown in Figure 3. One could use only NAND Y with both B inputs tied together and with the NAND standard output going to both start and stop inputs of the time interval unit. If the start and stop channels are different but still possess very sensitive photodevices, one could use either the two separate light pulsers or a single light pulser if the light can be led to both photodevices. If the start photodevice is insensitive, the SYNC output of the light pulser can be used to simulate the output of this photodevice.[3] The largest systematic error arises in the last case where one is uncertain of the exact delay in the photodiode. The primary virtues of this method over the ranging to a fixed target at a known distance are the greater control over test signal shapes and levels and the absence of the need for a fast shutter to view close-in distances with the Lunar Laser Ranging system.

V. High Data Rate Communication Channel

Photodevices for high data rate communication channels must possess very short impulse responses. An approximate expression for this response, P, at the single photoelectron level given by

$$P^2 = (2.36)^2(n\varepsilon_{SS}^2 + \varepsilon_{SA}^2) \tag{4}$$

where n is the number of dynodes, ε_{SS} the dynode-dynode transit time spread, and ε_{SA} is the dynode-anode time spread.[11] To obtain small P, one can decrease ε_{SS} or n. The old RCA C70045 did the former and possessed a P of 1 nsec. The new RCA C31024 with high gain dynode does the latter (n = 5 rather than 12), but is still not as fast as the C70045. The P for higher pulse amplitudes depends on the size and placement of the photosurface of the photodevice. Comparison with (2) shows that a device with a good impulse response need not have a good timing resolution capability. Furthermore, the present trend in high data rate communications is to work at light levels where large gains (e.g. 10^7) are not required of the photodevice. These high gains could mean destructive average currents in the photodevice. The result is that all funding is presently going to the development of photodevices not adequate for sub-nanosecond single photoelectron timing. An adequate device should have a high gain (e.g. 10^7) and a very small ε_{PH}. A high gain crossed-field photomultiplier with good quantum counting efficiency would be an ideal device for single photoelectron work.

In closing this section, the author would like to point out the usefulness of Cherenkov light sources for measuring impulse responses. One need not use a radioactive source since cosmic rays are continually passing through the radiator.[31]

References:

1. T. S. Johnson, H. H. Plotkin, and P. L. Spadin, IEEE J. of Quant. Electronics QE-3, 435 (1967).
2. C. Lehr, M. Pearlman, G. Mendes, and C. Tsiang, "The Laser Network of the Smithsonian Astrophysical Observatory," presented at XVth General Assembly of IUGG, Moscow, 1971.
3. E. Silverberg and D. G. Currie, "A Description of the Lunar Ranging Station at McDonald Observatory," in "Space Research" (A. Stickland, ed.), Vol. 12, p. 999, Akademie-Verlag, Berlin (1972).
4. S. K. Poultney, "The Detector Package for the Laser Ranging Experiment at McDonald Observatory: Its Design, Performance, and Operation," Dept. of Phys. and Astron. Tech. Rep. No. 957, University of Maryland, 1969.
5. S. K. Poultney, "Report on December 1969 Performance and Calibration Trip to the Lunar Laser Ranging Station." Dept. of Phys. and Astron. Tech. Rep. No. 70-075, University of Maryland, 1970.
6. S. K. Poultney, "Report on January 1970 Performance and Calibration Trip to the Lunar Laser Ranging Station," Dept. of Phys. and Astron. Tech Rep. No. 70-087, University of Maryland, 1970
7. S. K. Poultney, "Report on April 1970 Performance and Calibration Trip to the Lunar Laser Ranging Station," Dept. of Phys. and Astron. Tech. Rep. No. 70-099, University of Maryland, 1970.
8. C. Lehr, L. Maestre, and P. Anderson, "Photographic Measurements of the Energy Distribution in the Beam of a Ruby Laser," SAO Special Report No. 205, 1966.

9. C. Lehr, M. Pearlman, J. Scott, and J. Wohn, "Laser Satellite Ranging," Symposium on Laser Applications in the Geoscience," Douglas Advanced Research Laboratories, California, 1969.

10. D. Currie, Private Communication, 1972.

11. S. K. Poultney, in "Advances in Electronics and Electron Physics (L. Marton, ed.), Vol. 31, p. 499, Academic Press, 1972.

12. T. S. Johnson, "Laser Development Plans at GSFC," GEOS-2 Review Meeting 22-24 June 1970, GSFC, Greenbelt, Maryland.

13. C. Lehr, M. Pearlman, and J. Scott, "Range Corrections from Oscilloscope Displays of Laser Returns," SAO Laser Report No. 4, 1970.

14. S. K. Poultney, IEEE Trans. Nucl. Sci. NS-19, 999 (1972).

15. C. Steggerda, "A Description of the Time Interval Measurement and Laser Control Circuitry for the Lunar Ranging Experiment," Dept. of Phys. and Astron. Tech. Rep. No. 70-049, University of Maryland, 1969.

16. S. K. Poultney, "The Concept of the Time Interval Measurement and Control Circuitry for the Lunar Ranging Experiment: A History," Dept. of Phys. and Astron. Tech. Rep. No. 70-68, University of Maryland, 1969.

17. C. Steggerda, Private Communication, 1971.

18. J. Rayner, "A Description of the Control Program for the Lunar Ranging Experiment," Dept. of Phys. and Astron. Tech. Rep. No. 70-064, University of Maryland, 1969.

19. W. Gunter, G. Grant, and S. Shaw, Appl. Opt. 9, 251 (1970).

20. R. Lakes and S. Poultney, Appl. Opt. 10, 797 (1971).

21. J. Miehe, G. Ambard, J. Zampach, and A. Coche, IEEE Trans. Nucl. Sci. NS-17, 115 (1970).

22. E. Gatti and V. Svelto, Nucl. Instr. and Meth. 43, 248 (1966).

23. S. Donati, E. Gatti, and V. Svelto, in "Advances in Electronics and Electron Physics" (L. Marton, ed.), Vol. 26, p. 297, Academic Press, New York, 1969.

24. S. Moss and W. Wells, IEEE J. Quant. Electronics QE-3, 440 (1967).

25. R. Lakes and S. Poultney, Rev. Sci. Instrumen 41, 1889 (1970).

26. B. Leskovar and C. C. Lo, IEEE Trans. Nucl. Sci. NS-19, 999 (1972).

27. C. Steggerda, "A Triggerable Sub-Nanosecond Light Source," Dept. of Phys. and Astron. Tech. Rep. No. 71-086, University of Maryland, 1971.

28. D. B. Scarl and G. Present, Rev. Sci. Instrum. 41, 771 (1970).

29. See also, D. B. Scarl, Phys. Rev. 175, 1661 (1968).

30. R. Ambartsumyan et. al., Sov. Phys. JETP 24, 272 (1967).

31. M. Birk, Q. Kerns, and R. Tusting, IEEE Trans. Nuc. Sci. NS-11, 129 (1964).

32. D. A. Gedcke and W. J. McDonald, Nucl. Instr. and Meth. 58, 253 (1968).

Figure Captions

Figure 1: Ranging and Control Electronics for the Lunar Ranging Experiment. Special logic circuits eliminate any $\pm$ 1 count uncertainty in the range.

Figure 2: General Block Diagram of the Electronics for Measuring the Timing Precision of a Ranging Channel. The light box has a shutter and an inner box with slots for various optical filters and attenuators.

Figure 3: Range Accuracy Calibration Circuit. If one light pulse can be conducted to both photodevices, it is best to use NAND Y with B inputs tied together. If START photodevice is insensitive to low level light pulse, SYNC OUT can be used an alternate START.

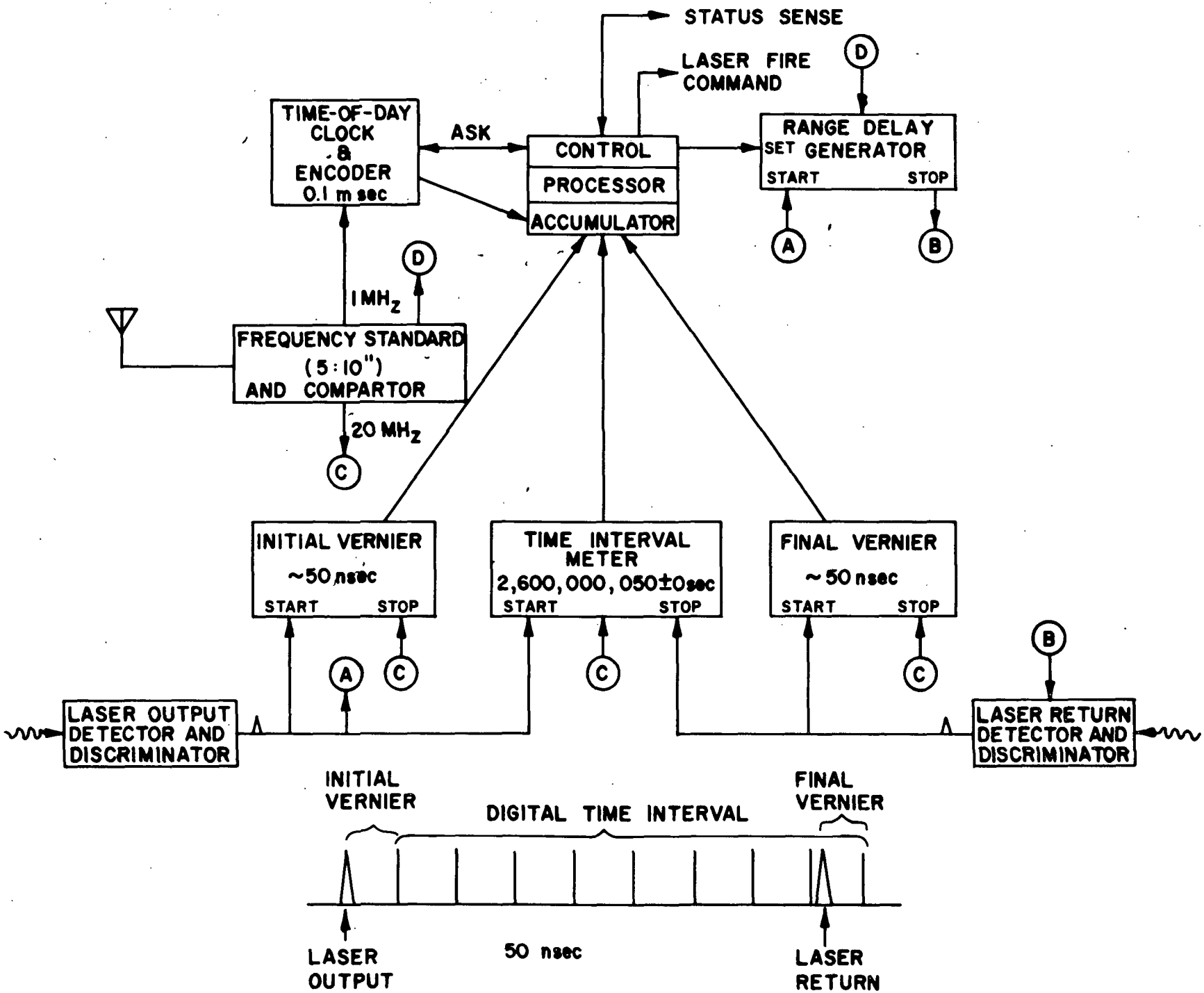
STATUS SENSE
LASER FIRE COMMAND
D
TIME-OF-DAY CLOCK & ENCODER 0.1 m sec
ASK
CONTROL
PROCESSOR
ACCUMULATOR
RANGE DELAY SET GENERATOR
START
STOP
A
B
D
1 MHz
FREQUENCY STANDARD (5:10") AND COMPARTOR
20 MHz
C
INITIAL VERNIER ~50 nsec
START
STOP
TIME INTERVAL METER 2,600,000,050±0 sec
START
STOP
FINAL VERNIER ~50 nsec
START
STOP
A
C
C
C
B
LASER OUTPUT DETECTOR AND DISCRIMINATOR
LASER RETURN DETECTOR AND DISCRIMINATOR
INITIAL VERNIER
DIGITAL TIME INTERVAL
FINAL VERNIER
LASER OUTPUT
50 nsec
LASER RETURN

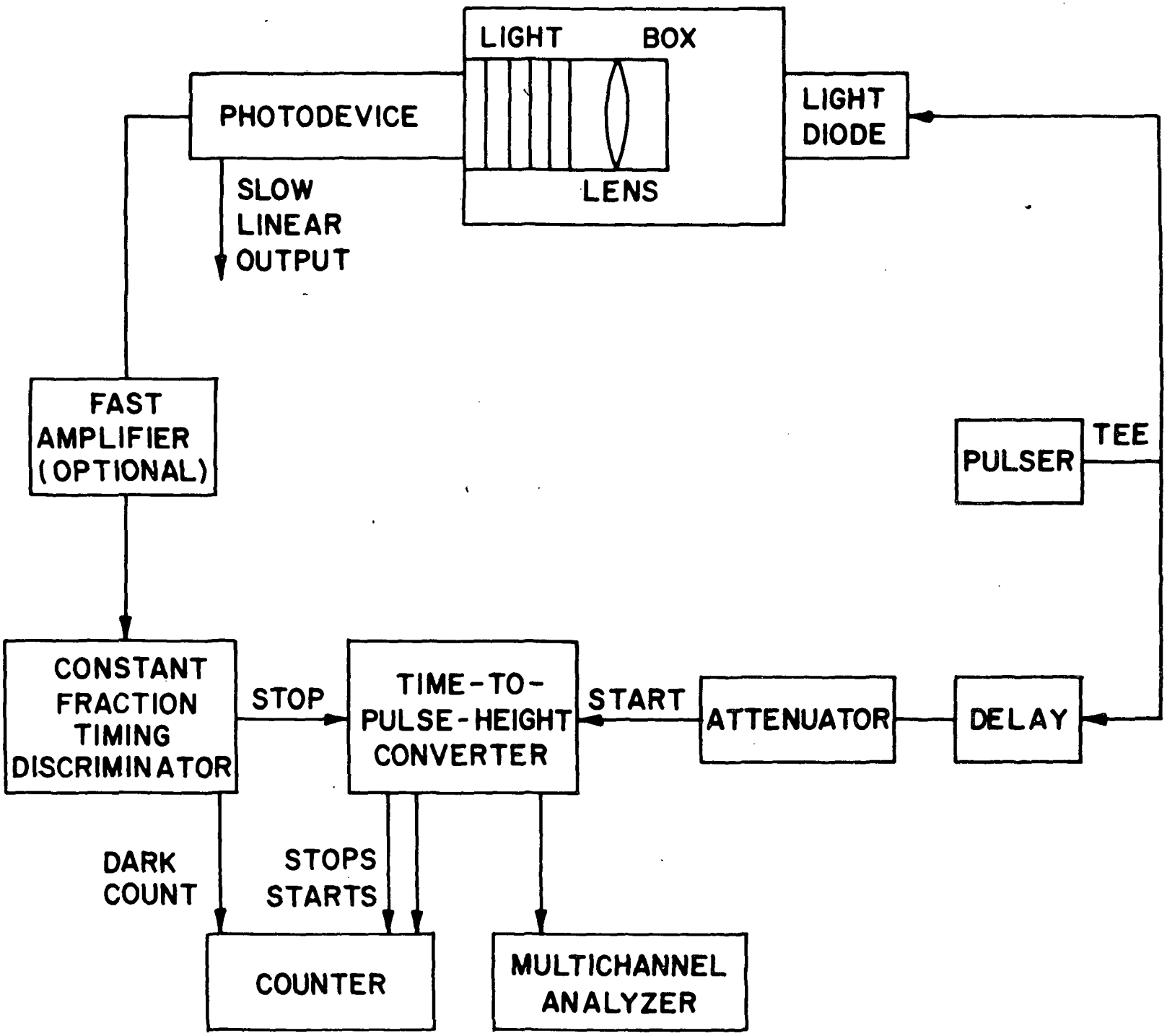
LIGHT BOX
PHOTODEVICE
LIGHT DIODE
LENS
SLOW LINEAR OUTPUT
FAST AMPLIFIER (OPTIONAL)
PULSER
TEE
CONSTANT FRACTION TIMING DISCRIMINATOR
STOP
TIME-TO-PULSE-HEIGHT CONVERTER
START
ATTENUATOR
DELAY
DARK COUNT
STOPS
STARTS
COUNTER
MULTICHANNEL ANALYZER

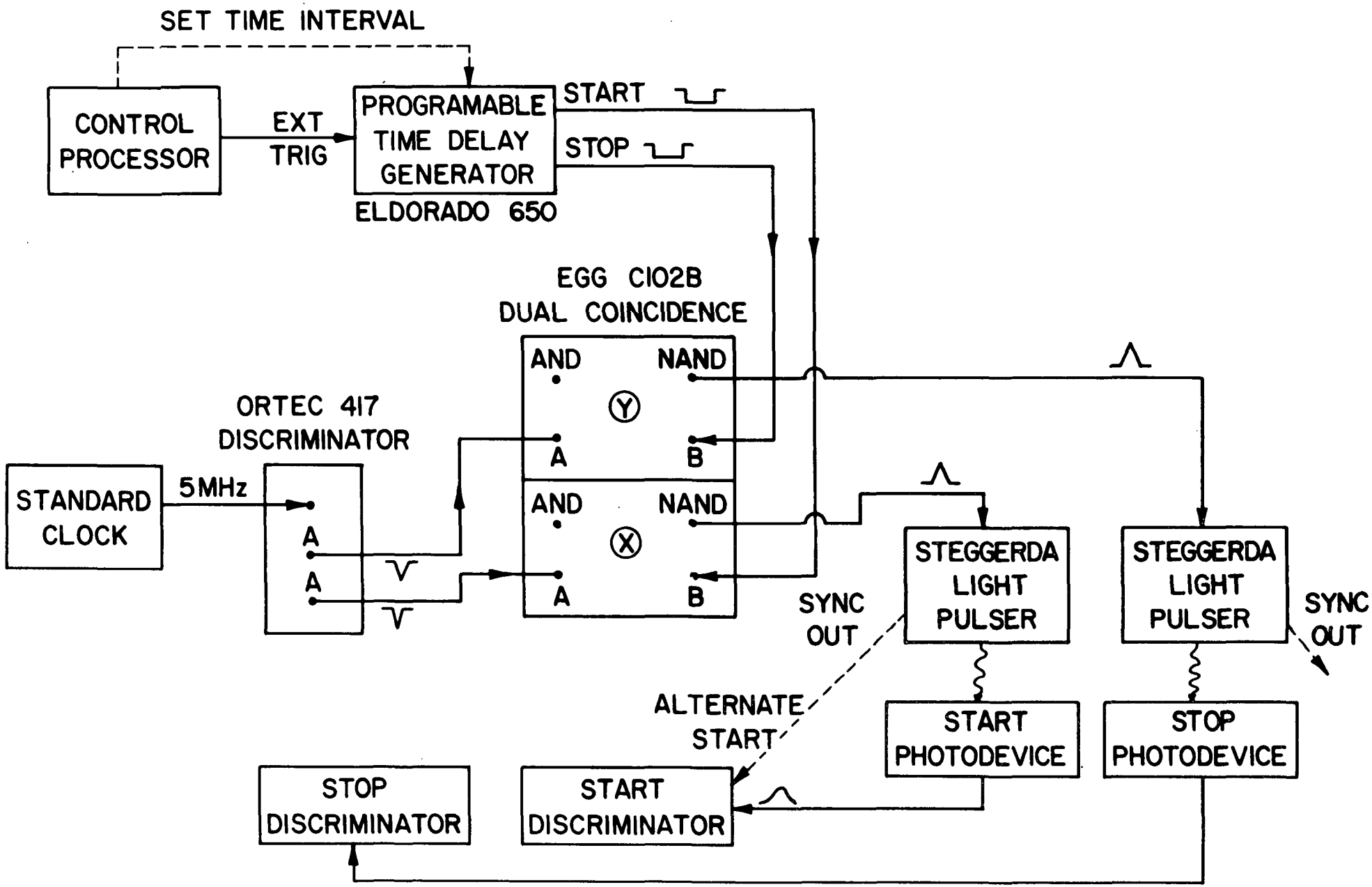
SET TIME INTERVAL
CONTROL PROCESSOR
EXT TRIG
PROGRAMABLE TIME DELAY GENERATOR
ELDORADO 650
START
STOP
EGG CIO2B
DUAL COINCIDENCE
AND
NAND
Y
A
B
AND
NAND
X
A
B
ORTEC 417
DISCRIMINATOR
STANDARD CLOCK
5MHz
A
A
STEGGERDA LIGHT PULSER
STEGGERDA LIGHT PULSER
SYNC OUT
SYNC OUT
ALTERNATE START
START PHOTODEVICE
STOP PHOTODEVICE
STOP DISCRIMINATOR
START DISCRIMINATOR

APPENDIX I: Publications Partially-Supported by NGR 21-002-211

R. Lakes and S. Poultney, Photocathode Quantum Efficiency Enhancement of the RCA C31000E Photomultiplier at 6328 A. Appl. Optics 9, 2192 (1970).

R. Lakes and S. Poultney, Sub-Nanosecond Single-Photoelectron Timing Resolution of the RCA C31000E Photomultiplier Using Ortec Constant Fraction Discriminators and Monsanto Light-Emitting Diodes, Rev. Sci. Instr. 41, 1889 (1970).

R. Lakes and S. Poultney, Direct Measurement of the Quantum Counting Efficiency of a RCA C31000E Photomultiplier at 6328 A., Appl. Optics 10, 797 (1971).

S. Poultney, Single Photon Detection and Timing in "Advances in Electronics and Electron Physics" (L. Marton, ed.), Vol. 31, Academic Press, New York, Fall 1972.

S. Poultney, Sub-Nanosecond Single-Photoelectron Timing Resolution of the RCA C31000K Photomultiplier, Rev. Sci. Instr., in preparation, Spring 1972.

C. Steggerda, A Triggerable Sub-Nanosecond Light Source, Department of Physics and Astronomy Technical Report No. 71-086, University of Maryland, College Park, MD., 1971.

K. Liewer and D. Currie, Sub-Nanosecond Single-Photoelectron Timing Resolution of the Bendix BX 754 Channel Photomultiplier, in preparation Spring, 1972.

K. Liewer and D. Currie, Cerenkov Light Pulser for Use in Measuring Sub-Nanosecond Single-Photoelectron Timing Resolutions of Photodevices, Department of Physics and Astronomy Technical Report No. 72-099, University of Maryland, College Park, Md., 1972.

Appendix II

A Modification of the Triggerable Subnanosecond Light Source for Ease in Operation

C. Steggerda

Field use of the light source has shown that the shortest light pulses are obtained when the trigger pulse is just sufficient to cause the avalanche discharge of the transistor (Q_1). A trigger pulse of greater amplitude appears to cause the transistor to operate as a normal transistor before going into the avalanche mode. This hesitation causes the collector transmission line to discharge at a slower rate causing pulse widening at reduced amplitude. Thus, the transistor triggering pulse is critical. An effort has been made to reduce this dependency on the trigger pulse by using a step recovery diode* (SRD) to form a pulse shaping network.

The pulse shaping network and triggerable light source diagram are shown in Figure 1. With the diode network a variety of input trigger pulses varying in both amplitude and rise-time have a minimal effect on the pulse from the avalanche transistor. Thus the light source is much more consistent. A typical trigger pulse would be +3 v with a 20 nsec risetime. Once a stable trigger pulse is selected, it should be kept the same. The SRD bias is a fixed -1.5 v. The transistor Q_1 bias is a fixed 90 v. The LED bias is variable from +1 to -1 v. Bias supplies have to be provided. To generate nanosecond light pulses, it is necessary to forward bias the LED by -1 v. A typical light pulse has a FWHM of

1 nsec. The SYNC OUTPUT must be terminated in 50 ohms. The SYNC output which is a +16 v, 1 nsec pulse can be used as an electrical marker in sychronism with the light pulse. Trigger pulse rates should not exceed 10 kHz.

Light output of the pulser depends to some extent on the photodevice and viewing optics. At a fixed output width, it is best to adjust the light pulse amplitude by means of optical attenuators. The light output can also be decreased by reducing the negative bias which will also probably reduce the pulse width. The converse is also true until the LED glows continuously.

*Physical Modeling of the Step Recovery Diode for Pulse and Harmonic Generation Circuits, Mull and Hamilton, Proc. of IEEE, Vol. 57, #7.

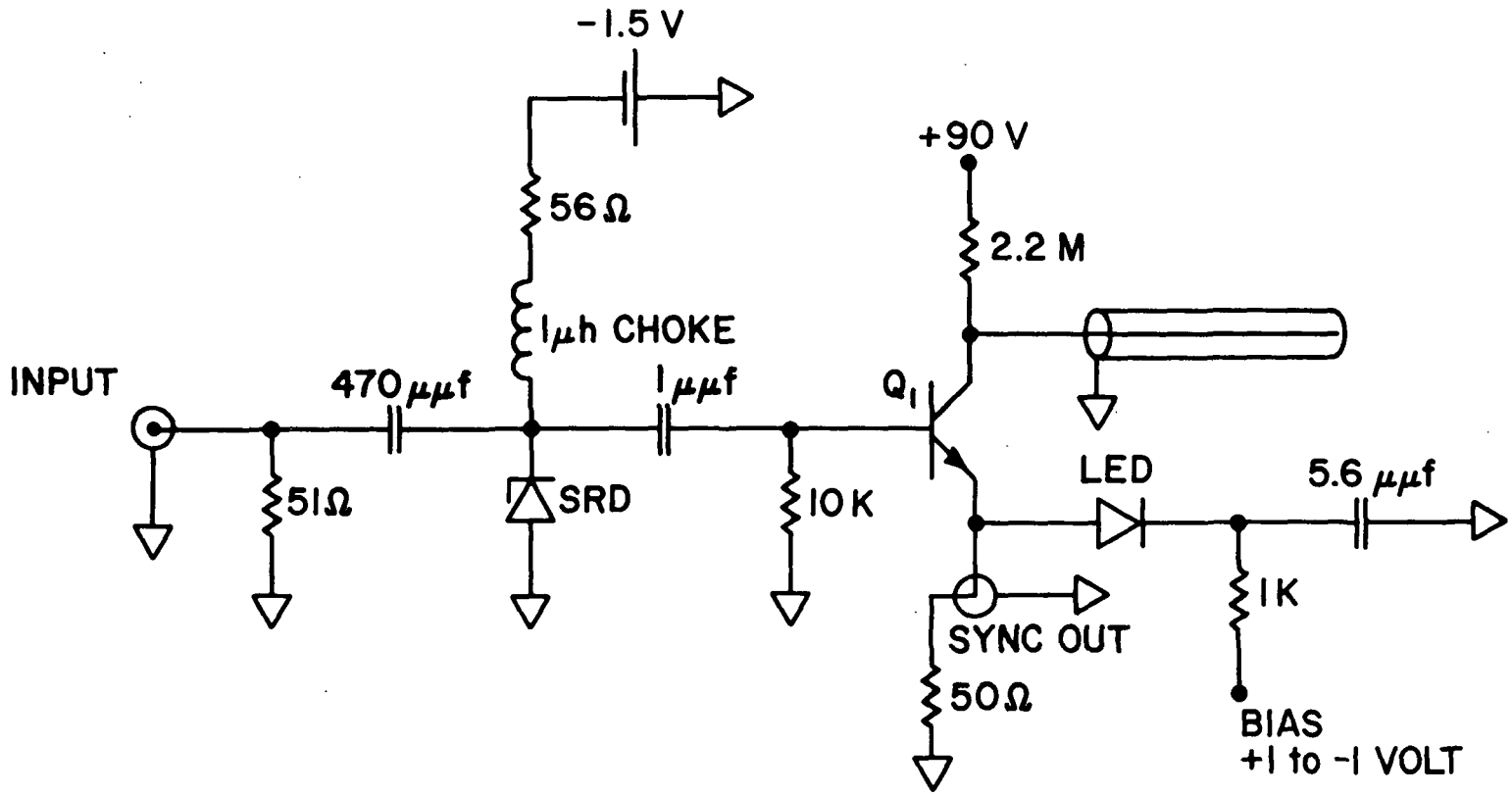

SRD = HEWLETT PACKARD 5082-0152
LED = MONTSANTO TYPE MV 10B
Q_1 = 2N 3033, 34, OR 35

Fig. 1 DIAGRAM FOR A PULSE SHAPING NETWORK WITH THE SUBNANOSECOND LIGHT SOURCE.