US007149225B2

(12) **United States Patent**
Thubert et al.

(10) **Patent No.: US 7,149,225 B2**
(45) **Date of Patent: Dec. 12, 2006**

(54) **ARRANGEMENT FOR TRAVERSING AN IPV4 NETWORK BY IPV6 MOBILE NODES VIA A MOBILITY ANCHOR POINT**

(75) Inventors: **Pascal Thubert**, La Colle sur Loup (FR); **Marco Molteni**, Antibes (FR); **Patrick Wetterwald**, Cagnes sur Mer (FR); **Ole Troan**, Redhill (GB)

(73) Assignee: **Cisco Technology, Inc.**, San Jose, CA (US)

(*) Notice: Subject to any disclaimer, the term of this patent is extended or adjusted under 35 U.S.C. 154(b) by 507 days.

(21) Appl. No.: **10/617,197**

(22) Filed: **Jul. 11, 2003**

(65) **Prior Publication Data**

US 2004/0179508 A1 Sep. 16, 2004

Related U.S. Application Data

(63) Continuation-in-part of application No. 10/383,567, filed on Mar. 10, 2003, now Pat. No. 7,031,328.

(51) **Int. Cl.**
H04L 12/28 (2006.01)

(52) **U.S. Cl.** **370/401**; 370/466

(58) **Field of Classification Search** ..... None
See application file for complete search history.

(56) **References Cited**

U.S. PATENT DOCUMENTS

6,496,505 B1 * 12/2002 La Porta et al. 370/392
6,721,197 B1 * 4/2004 McCollum 365/96
6,947,401 B1 * 9/2005 El-Malki et al. 370/331
2003/0018810 A1 * 1/2003 Karagiannis et al. 709/238

OTHER PUBLICATIONS

Johnson et al., "Mobility Support in IPv6", Internet Draft, IETF Mobile IP Working Group, draft-ietf-mobileip-ipv6-20.txt, Jan. 20, 2003.
Deering et al., "Internet Protocol, Version 6 (IPv6)", Request for Comments: 2460, IETF Network Working Group, Specification, Dec. 1998.
Huitema, "Teredo: Tunneling IPv6 over UDP through NAT's", IETF Internet Draft, draft-ietf-ngtrans-shipworm-08.txt, Sep. 17, 2002.

(Continued)

Primary Examiner—Frank Duong
(74) *Attorney, Agent, or Firm*—Leon R. Turkevich

(57) **ABSTRACT**

An IPv6 mobile node establishes an IPv4 connection with an IPv6 router having an IPv4 interface and configured as a Mobility Anchor Point (MAP) according to Hierarchical Mobile IPv6 Protocol. The MAP assigns a valid IPv6 care-of address to the IPv6 mobile node in response to receiving an IPv4 packet carrying an IPv6 packet requesting a valid care-of address. The IPv4 packet includes IPv4 source and destination addresses, a TCP/UDP source port and TCP/UDP destination port, and a synthetic tag address in the IPv6 source address field. The synthetic tag address includes a unique identifier that enables the MAP to associate the valid IPv6 care-of address with the IPv6 mobile node. Hence, the MAP forwards an IPv6 packet, carried via the IPv4 connection from the source IPv6 mobile node, onto an IPv6 network with an IPv6 source address field that specifies the assigned valid IPv6 care-of address.

45 Claims, 9 Drawing Sheets

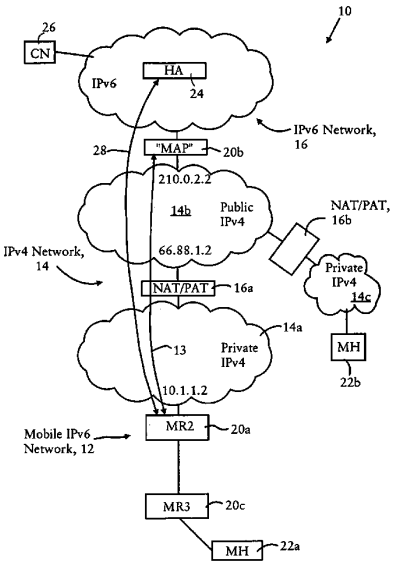

OTHER PUBLICATIONS

Carpenter et al., "Connection of IPv6 Domains via IPv4 Clouds", IETF Network Working Group, Request for Comments: 3056, Feb. 2001.

Thubert et al., "IPv6 Reverse Routing Header and its application to Mobile Networks", IETF Network Working Group, Internet-Draft, draft-thubert-nemo-reverse-routing-header-01, Oct. 11, 2002.

Thubert et al., "IPv6 Reverse Routing Header and its application to Mobile Networks", IETF Network Working Group, Internet-Draft, draft-thubert-nemo-reverse-.

Soliman et al., Hierarchical MIPv6 mobility management (HMIPv6), IETF Mobile IP Working Group, Internet-Draft, draft-ietf-mobileip-hmipv6-06.txt, Jul. 2002.

* cited by examiner

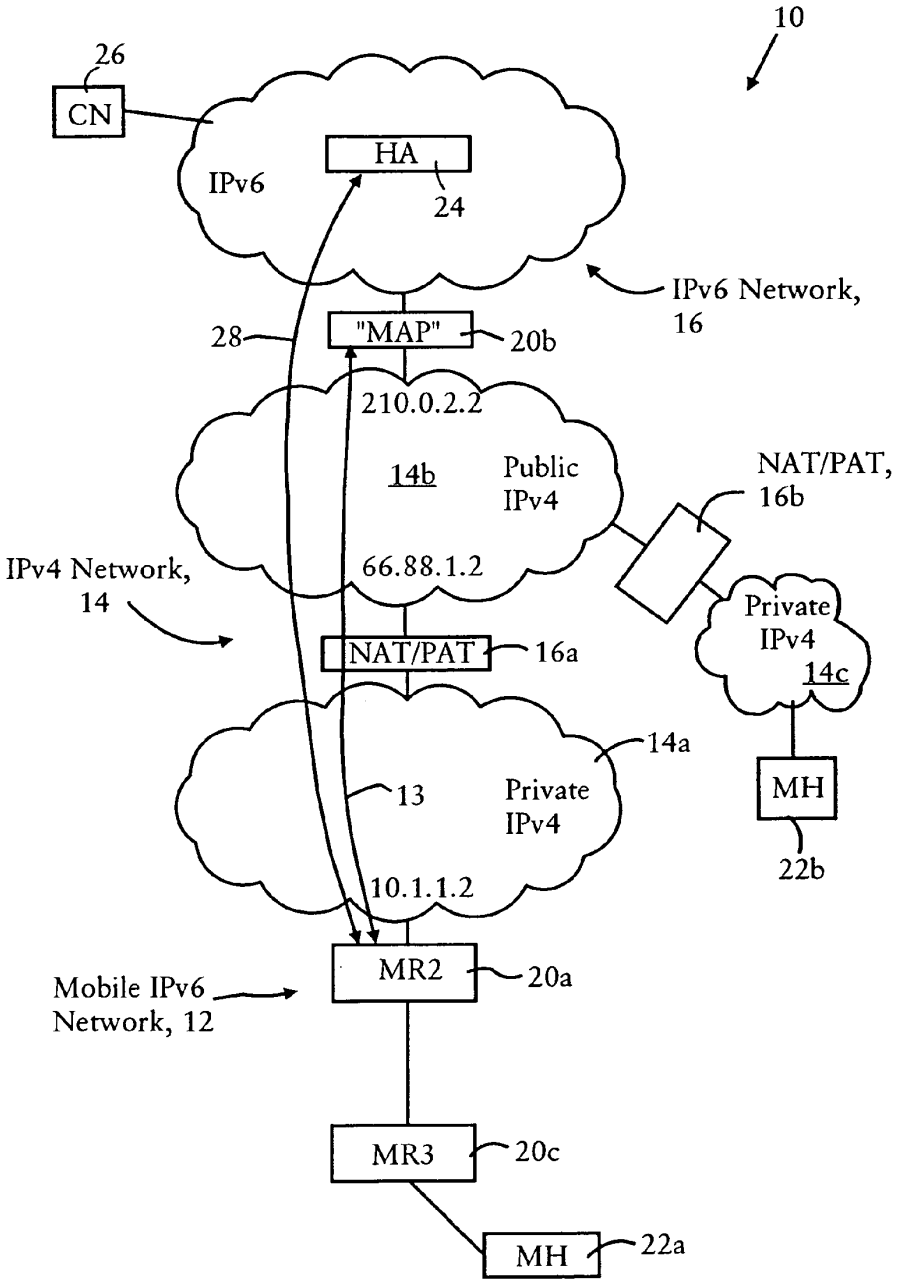
10
26
CN
IPv6
HA
24
IPv6 Network,
16
28
"MAP"
20b
210.0.2.2
14b
Public
IPv4
NAT/PAT,
16b
IPv4 Network,
14
66.88.1.2
Private
IPv4
14c
NAT/PAT
16a
14a
13
Private
IPv4
MH
22b
10.1.1.2
MR2
20a
Mobile IPv6
Network, 12
MR3
20c
MH
22a

Figure 1

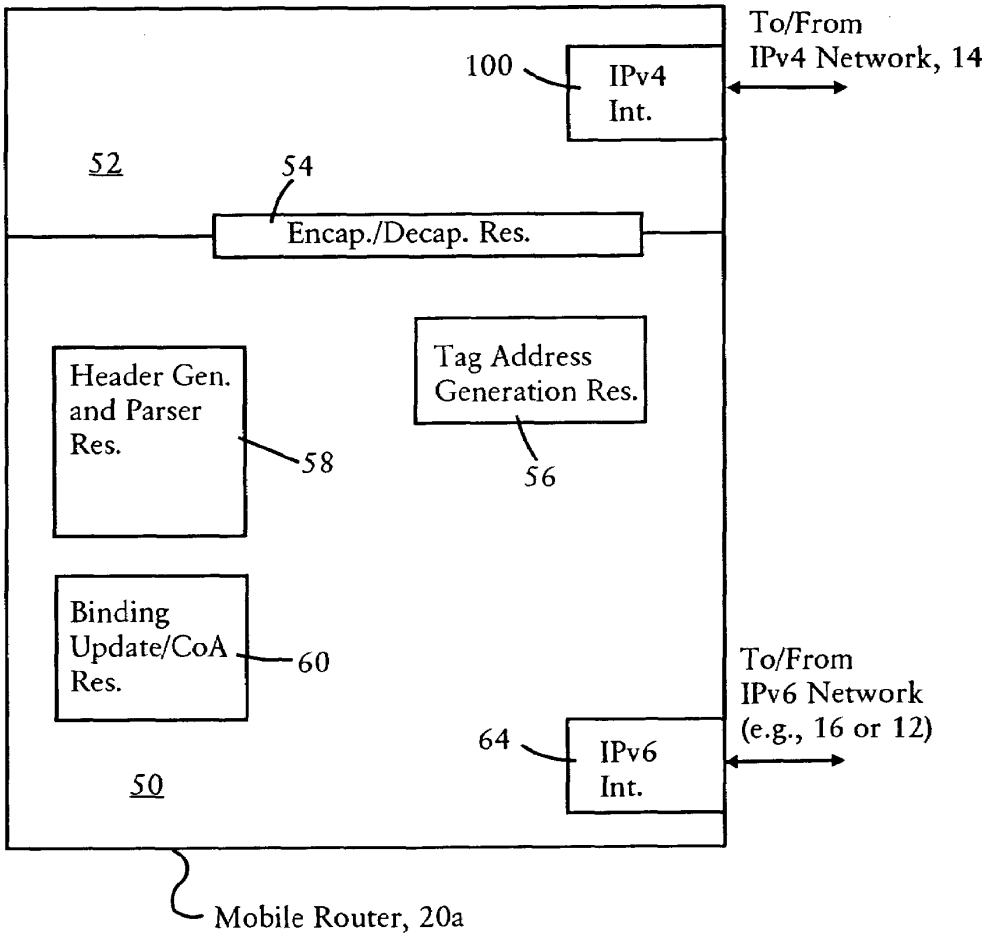
To/From
IPv4 Network, 14
100
IPv4
Int.
52
54
Encap./Decap. Res.
Header Gen.
and Parser
Res.
58
Tag Address
Generation Res.
56
Binding
Update/CoA
Res.
60
To/From
IPv6 Network
(e.g., 16 or 12)
64
IPv6
Int.
50
Mobile Router, 20a

Figure 2A

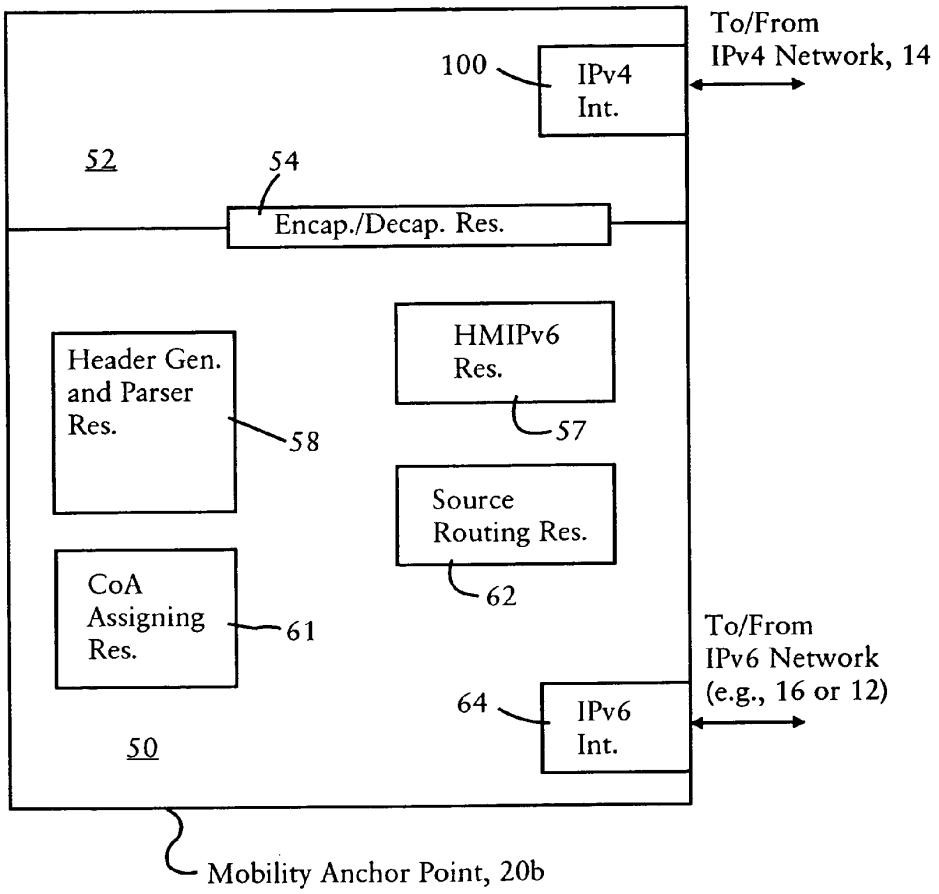
To/From
IPv4 Network, 14
100
IPv4
Int.
52
54
Encap./Decap. Res.
HMIPv6
Res.
Header Gen.
and Parser
Res.
58
57
Source
Routing Res.
CoA
Assigning
Res.
61
62
To/From
IPv6 Network
(e.g., 16 or 12)
64
IPv6
Int.
50
Mobility Anchor Point, 20b

Figure 2B

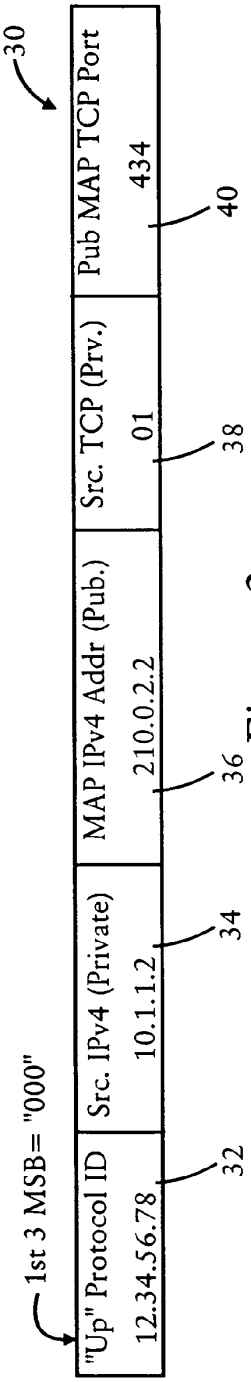

Figure 3

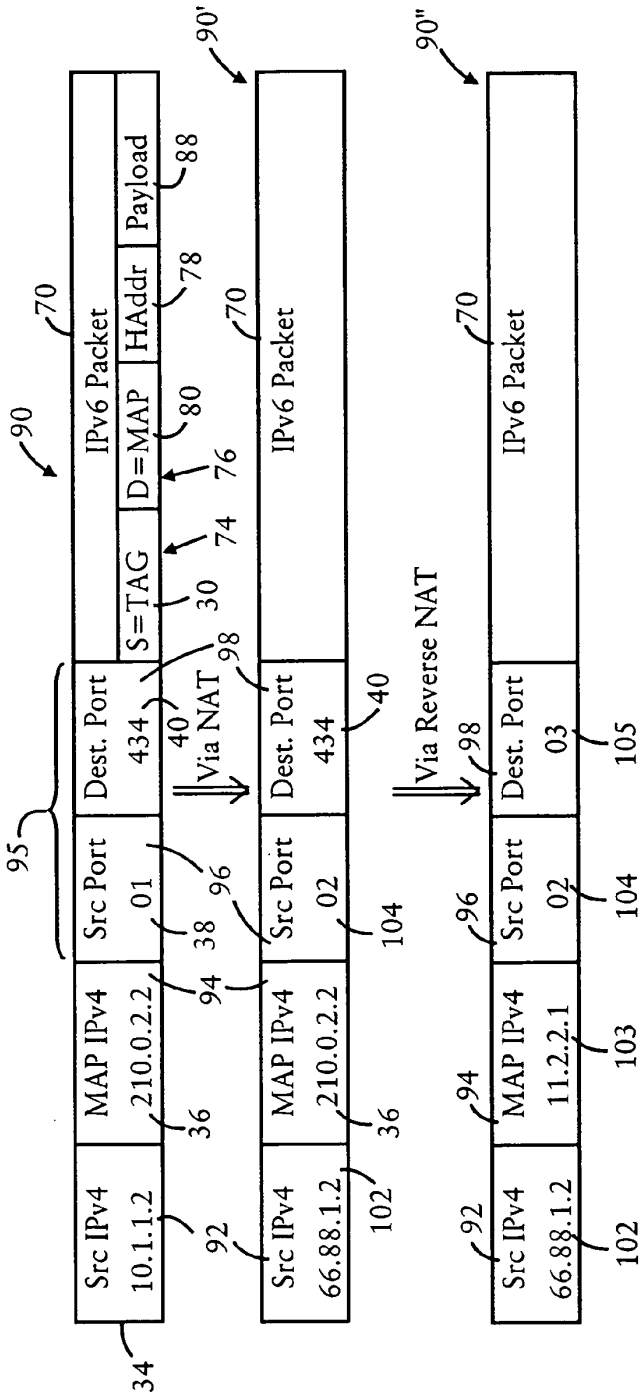

Figure 4

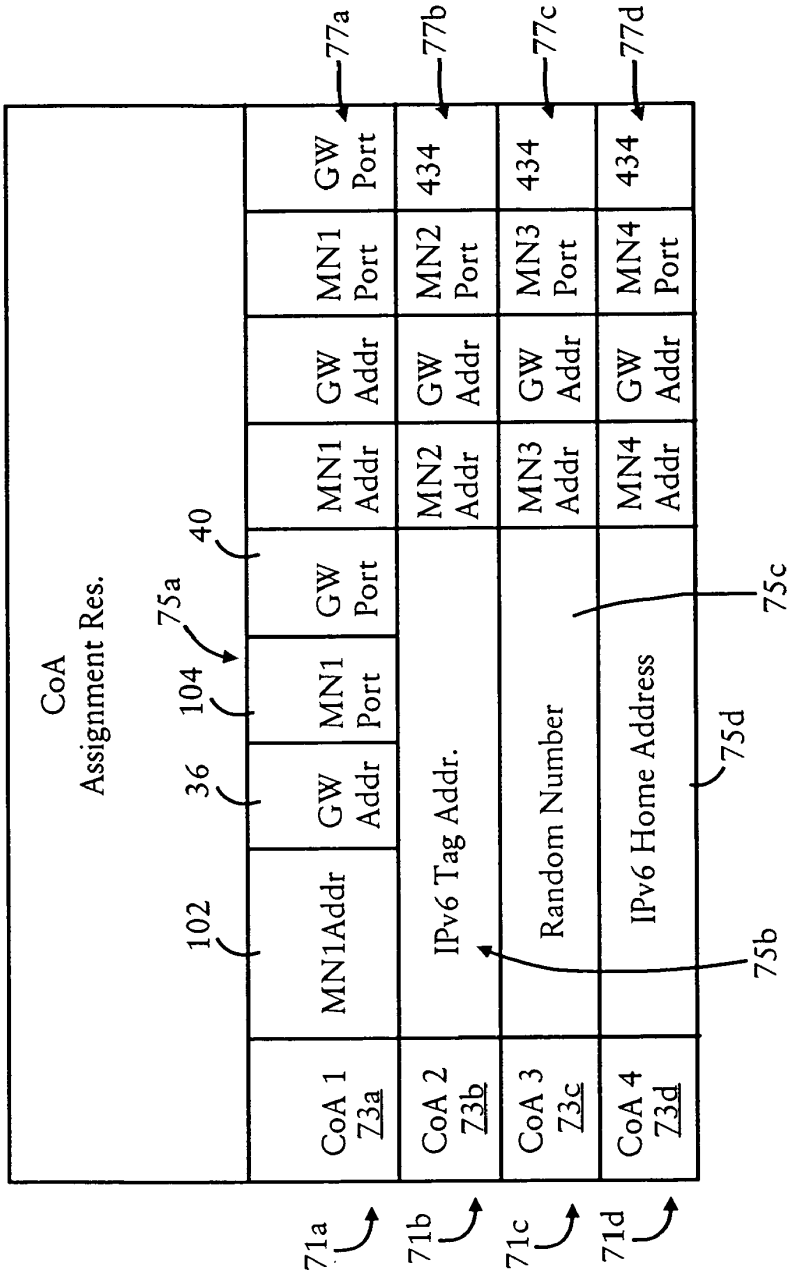
CoA
Assignment Res.
CoA 1
Z3a
CoA 2
Z3b
CoA 3
Z3c
CoA 4
Z3d
MN1Addr
GW
Addr
MN1
Port
GW
Port
MN1
Addr
GW
Addr
MN1
Port
GW
Port
IPv6 Tag Addr.
MN2
Addr
GW
Addr
MN2
Port
434
Random Number
MN3
Addr
GW
Addr
MN3
Port
434
IPv6 Home Address
MN4
Addr
GW
Addr
MN4
Port
434
71a
71b
71c
71d
102
36
104
75a
40
77a
77b
77c
77d
75b
75c
75d
61

Figure 5

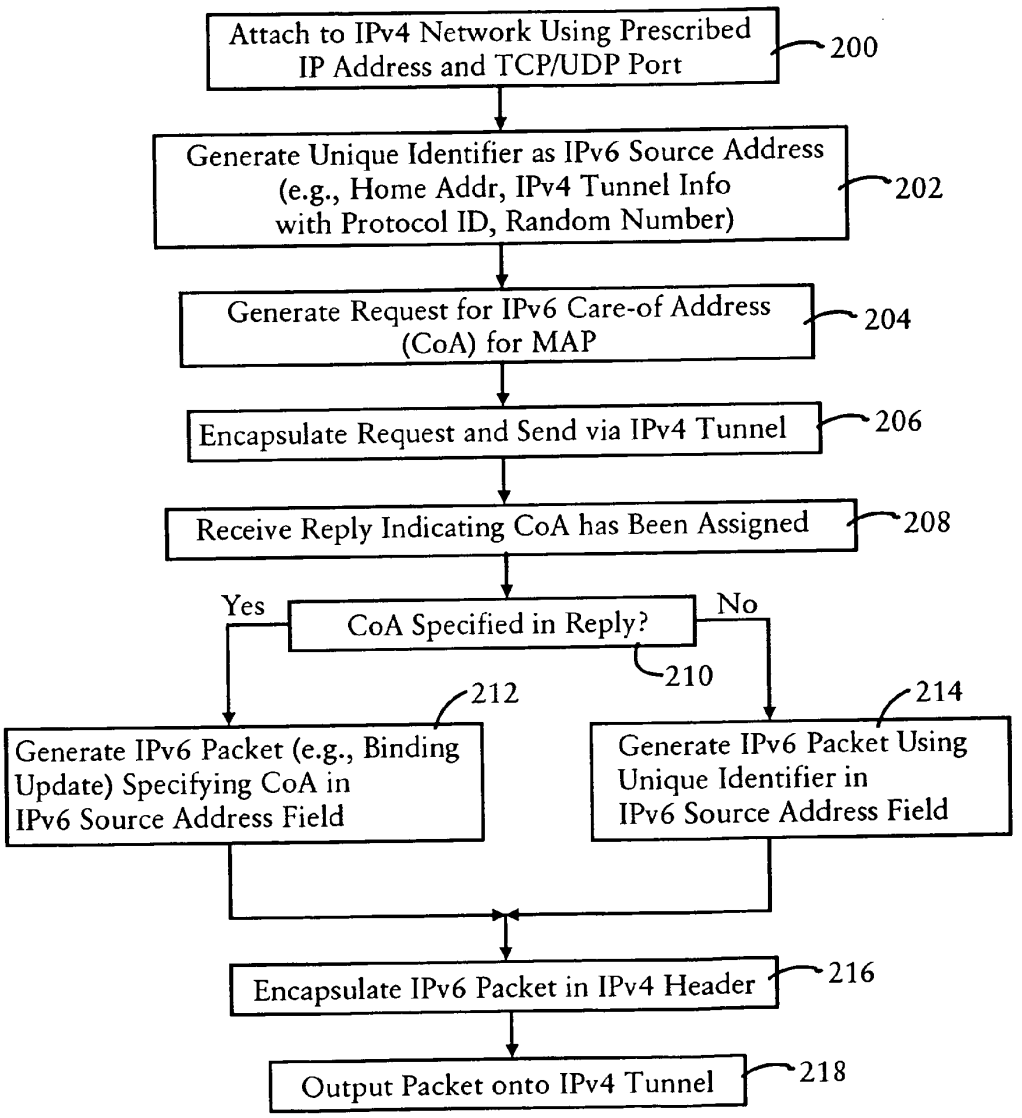
Attach to IPv4 Network Using Prescribed IP Address and TCP/UDP Port
200
Generate Unique Identifier as IPv6 Source Address (e.g., Home Addr, IPv4 Tunnel Info with Protocol ID, Random Number)
202
Generate Request for IPv6 Care-of Address (CoA) for MAP
204
Encapsulate Request and Send via IPv4 Tunnel
206
Receive Reply Indicating CoA has Been Assigned
208
Yes
CoA Specified in Reply?
No
210
212
214
Generate IPv6 Packet (e.g., Binding Update) Specifying CoA in IPv6 Source Address Field
Generate IPv6 Packet Using Unique Identifier in IPv6 Source Address Field
Encapsulate IPv6 Packet in IPv4 Header
216
Output Packet onto IPv4 Tunnel
218

Figure 6A

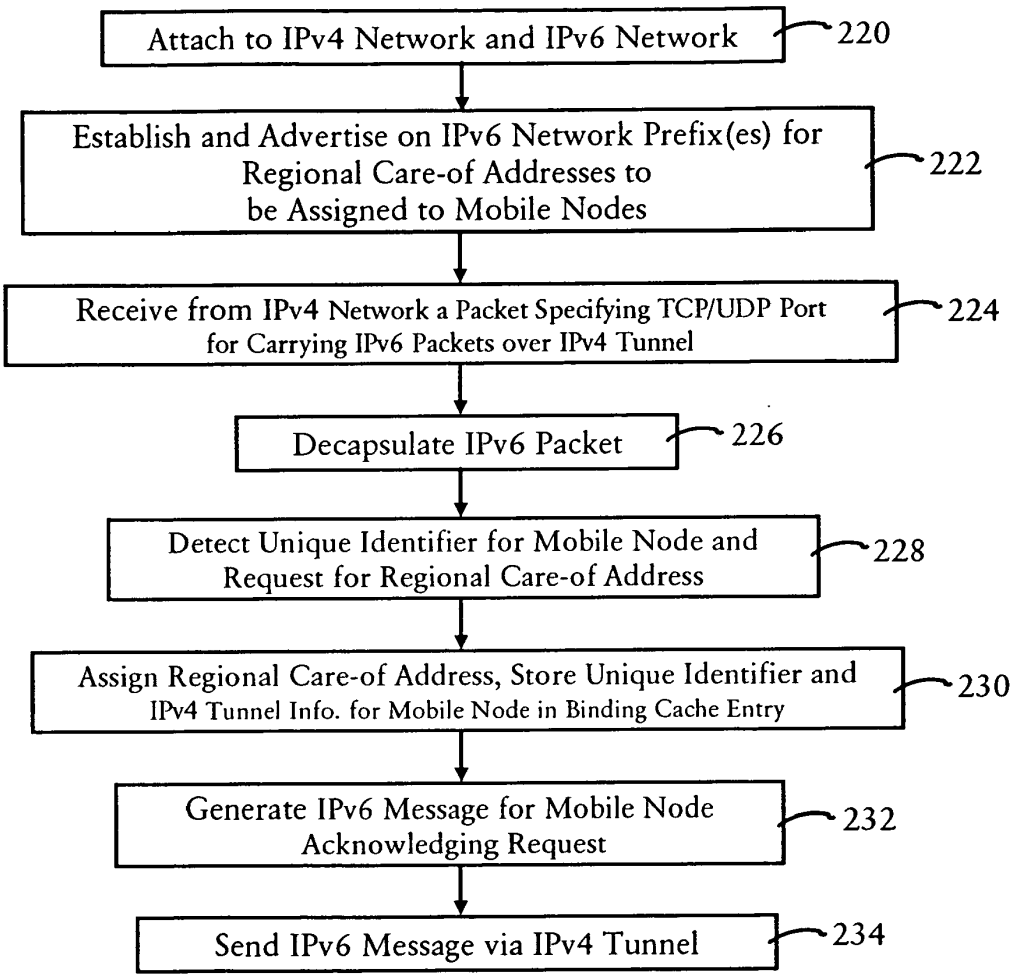
Attach to IPv4 Network and IPv6 Network
220
Establish and Advertise on IPv6 Network Prefix(es) for Regional Care-of Addresses to be Assigned to Mobile Nodes
222
Receive from IPv4 Network a Packet Specifying TCP/UDP Port for Carrying IPv6 Packets over IPv4 Tunnel
224
Decapsulate IPv6 Packet
226
Detect Unique Identifier for Mobile Node and Request for Regional Care-of Address
228
Assign Regional Care-of Address, Store Unique Identifier and IPv4 Tunnel Info. for Mobile Node in Binding Cache Entry
230
Generate IPv6 Message for Mobile Node Acknowledging Request
232
Send IPv6 Message via IPv4 Tunnel
234

Figure 6B

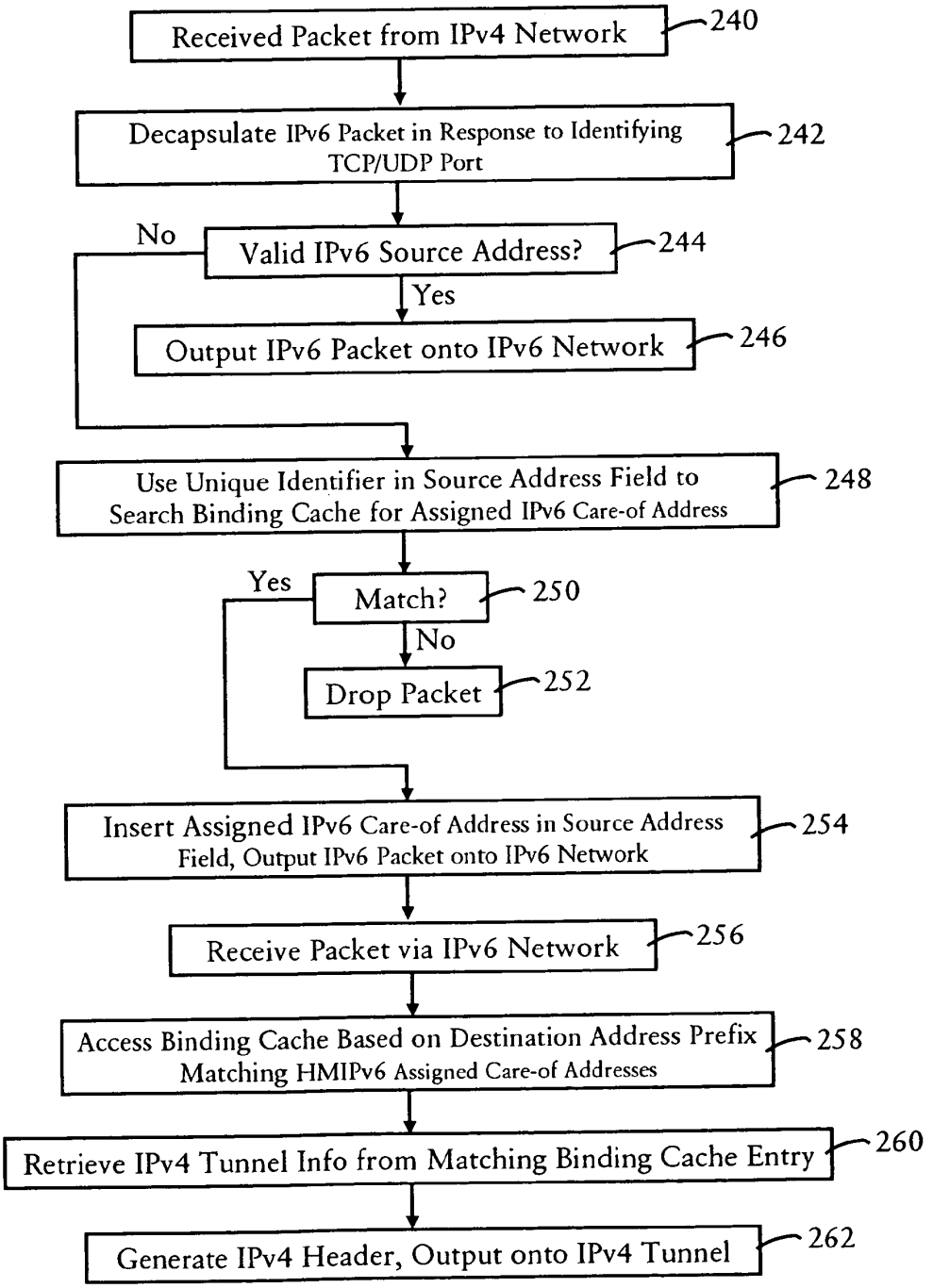
Received Packet from IPv4 Network
240
Decapsulate IPv6 Packet in Response to Identifying TCP/UDP Port
242
No
Valid IPv6 Source Address?
244
Yes
Output IPv6 Packet onto IPv6 Network
246
Use Unique Identifier in Source Address Field to Search Binding Cache for Assigned IPv6 Care-of Address
248
Yes
Match?
250
No
Drop Packet
252
Insert Assigned IPv6 Care-of Address in Source Address Field, Output IPv6 Packet onto IPv6 Network
254
Receive Packet via IPv6 Network
256
Access Binding Cache Based on Destination Address Prefix Matching HMIPv6 Assigned Care-of Addresses
258
Retrieve IPv4 Tunnel Info from Matching Binding Cache Entry
260
Generate IPv4 Header, Output onto IPv4 Tunnel
262

Figure 6C

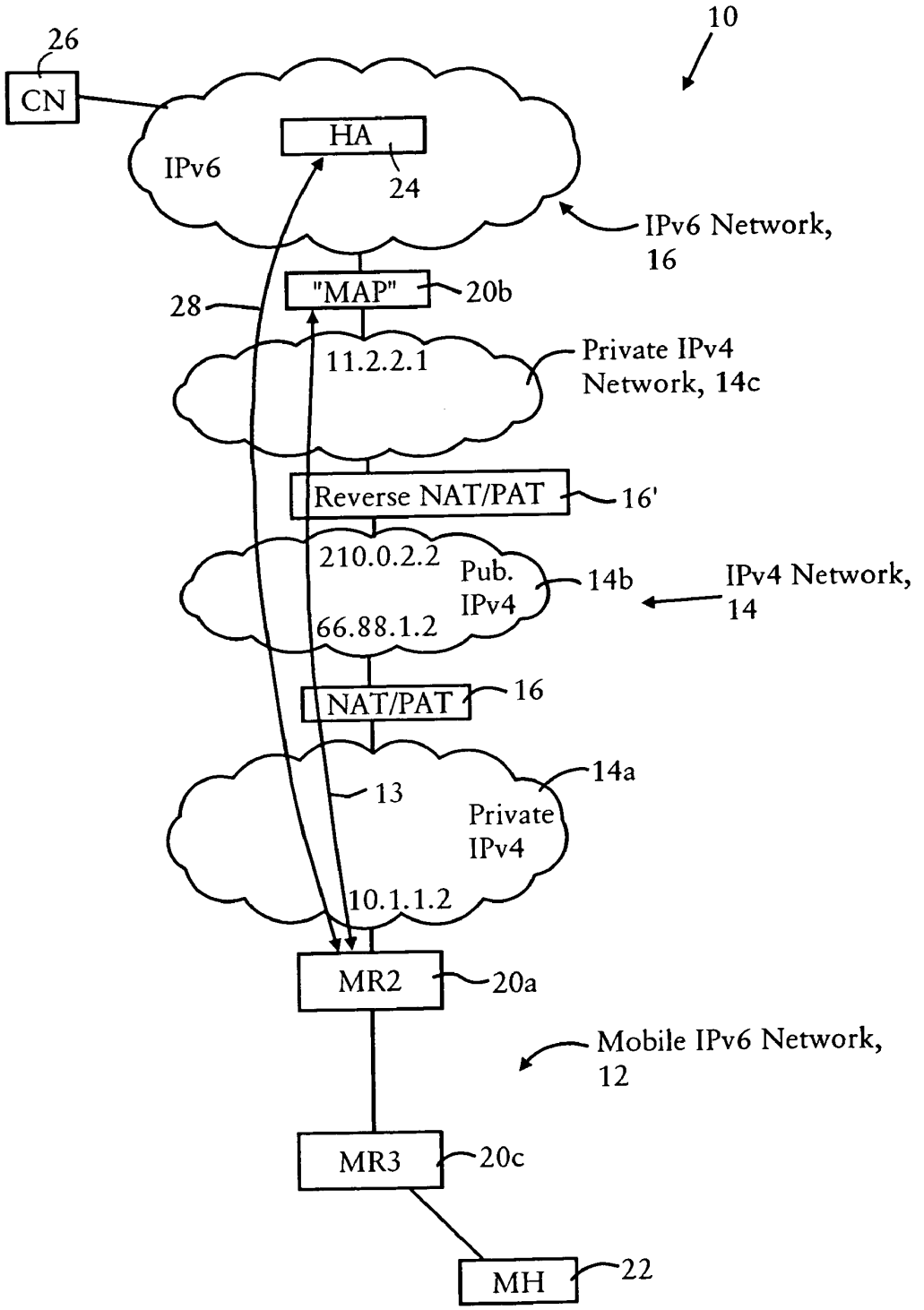
10
26
CN
IPv6
HA
24
IPv6 Network,
16
"MAP"
20b
28
11.2.2.1
Private IPv4
Network, 14c
Reverse NAT/PAT
16'
210.0.2.2
Pub.
IPv4
14b
IPv4 Network,
14
66.88.1.2
NAT/PAT
16
14a
13
Private
IPv4
10.1.1.2
MR2
20a
Mobile IPv6 Network,
12
MR3
20c
MH
22

Figure 7

ARRANGEMENT FOR TRAVERSING AN IPV4 NETWORK BY IPV6 MOBILE NODES VIA A MOBILITY ANCHOR POINT

CROSS REFERENCE TO RELATED APPLICATIONS

This application is a continuation-in-part of commonly-assigned application Ser. No. 10/383,567, filed Mar. 10, 2003, the disclosure of which is incorporated in its entirety herein by reference.

BACKGROUND OF THE INVENTION

1. Field of the Invention

The present invention relates to transport of Internet Protocol Version 6 (IPv6) packets by IPv6 nodes via an IPv4 network having a Network Address Translator (NAT) or a Port Address Translator (PAT).

2. Description of the Related Art

Proposals have been made by Internet Engineering Task Force (IETF) groups for improved mobility support of Internet Protocol (IP) based mobile devices (e.g., laptops, IP phones, personal digital assistants, etc.) in an effort to provide continuous Internet Protocol (IP) based connectivity. The IETF has two working groups focusing on mobile networks, a Mobile Ad-hoc Networks (MANET) Working Group that is working to develop standardized MANET routing specification(s) for adoption by the IETF, and NEMO (mobile networks). NEMO uses Mobile IP (MIP) to provide connectivity between mobile networks and the infrastructure (e.g.,, the Internet). The key component in NEMO is a mobile router that handles MIP on behalf of the mobile networks that it serves.

A "Mobile IPv6" protocol is disclosed in an Internet Draft by Johnson et al., entitled "Mobility Support in IPv6", available on the World Wide Web at the IETF website address "ietf.org/internet-drafts/draft-ietf-mobileip-ipv6-21 .txt" (the disclosure of which is incorporated in its entirety herein by reference). According to Johnson et al., the Mobile IPv6 protocol enables a mobile node to move from one link to another without changing the mobile node's IP address. In particular, the mobile node is assigned a "home address". The "home address" is an IP address assigned to the mobile node within its home subnet prefix on its home link. While a mobile node is at home, packets addressed to its home address are routed to the mobile node's home link, using conventional Internet routing mechanisms.

The mobile node also is assigned a home agent for registering any care-of address used by the mobile node at its point of attachment to the Internet while the mobile node is away from its home link. A care-of address is an IP address associated with a mobile node that has the subnet prefix of a particular link away from its home link (i.e., a foreign link). A home agent is a router on a mobile node's home link with which the mobile node has registered its current care-of address. While the mobile node is away from its home link, the home agent intercepts packets on the home link destined to the mobile node's home address; the home agent encapsulates the packets, and tunnels the packets to the mobile node's registered care-of address.

A variation of the Mobile IPv6 protocol is disclosed in an IETF Internet Draft by Soliman et al., "Hierarchical Mobile IPv6 mobility management (HMIPv6)" October 2002, available on the World Wide Web at the IETF website address "ietf.org/internet-drafts/draft-ietf-mobileip-hmipv6-07 .txt" and incorporated in its entirety herein by reference. The

Internet Draft by Soliman et al. discloses a Mobility Anchor Point (MAP) within an IPv6 network that implements HMIPv6 by assigning a regional care-of address to mobile nodes within its address realm. Mobile nodes may thus use on-link care-of addresses for communications within the address realm of the MAP, and the regional care-of address for IPv6 communications outside the MAP address realm. As such, the MAP serves as a local home agent.

Hence, a mobile node is always addressable by its "home address": packets may be routed to the mobile node using this address regardless of the mobile node's current point of attachment to the Internet. The mobile node also may continue to communicate with other nodes (stationary or mobile) after moving to a new link. The movement of a mobile node away from its home link is thus transparent to transport and higher-layer protocols and applications.

Proposals are underway by the Next Generation Transition (NGTRANS) Working Group of the Internet Engineering Task Force (IETF) to enable network nodes to transmit IP packets, generated according to IPv6 protocol as specified by the Request for Comments (RFC) 2460, across an IPv4 network. In particular, RFC 3056 proposes an interim solution (referred to herein as "the 6 to 4 proposal") of sending IPv6 packets as payload for IPv4 packets, where an interim unique IPv6 address prefix is assigned to any node that has at least one globally unique IPv4 address. These RFCs are available at the IETF website on the World Wide Web at "ietf.org" and these RFCs **2460** and **3056** are incorporated in their entirety herein by reference.

The 6to4 proposal specifies that an IPv6 node has an IPv6 address that contains an assigned IPv4 address, resulting in an automatic mapping between the IPv6 and IPv4 addresses. Hence, the IPv6 node can easily encapsulate the IPv6 packet with an IPv4 header based on extracting the assigned IPv4 address from within its IPv6 address. In particular, RFC 3056 specifies that the Internet Assigned Numbers Authority (IANA) has permanently assigned one 13-bit IPv6 Top Level Aggregator (TLA) identifier under the IPv6 Format Prefix "001" for the 6to4 proposal: the numeric value of the TLA is 0×00002, i.e., it has a value of 2002::/16 when expressed as a 16-bit IPv6 address prefix. Hence, a 48-bit address prefix is created by the format prefix "001", followed by the 13-bit TLA "0×00002", followed by the assigned 32-bit IPv4 address; the remaining 80 bits of the 128-bit IPv6 address are available for a 16-bit Site-Level Aggregation Identifier (SLA ID), and a 64-bit Interface ID. Consequently, any node having at least one globally unique IPv4 address can have a globally unique IPv6 address, even if the node is combined with an IPv4 Network Address Translator (NAT).

Concerns arise in the event that an IPv6 node is coupled to a private IPv4 network having a Network Address Translator (NAT). NATs perform a Layer-3 translation of IP-Addresses, so that public Internet addresses map to private IP addresses, as described in detail by the Request for Comments 1918 (RFC 1918). This mapping has allowed enterprises to map a large number of private addresses to a limited number of public addresses, thus limiting the number of public addresses required by Internet users.

As described in RFC 3056, however, if an IPv6 node is coupled to an IPv4 network having a NAT, then the NAT box "must also contain a fully functional IPv6 router including the 6to4 mechanism" in order for the 6to4 proposal to still be operable in the IPv4 network having the NAT. However, the modification of existing NATs to include IPv6 routers to include the 6to4 mechanism may not be a practical solution.

Further, the IPv4 addresses of the 6to 4 protocol are assumed to be global public addresses. Hence, if an IPv6 node (i.e., a correspondent node) wants to communicate with a roaming mobile IPv6 node, the 6to4 address of the roaming mobile IPv6 node must be a global public address, not a private address.

One proposal for traversing a NAT by an IPv6 node using automatic tunneling is described in an IETF Draft by Huitema, entitled "Teredo: Tunneling IPv6 over UDP through NATs", Sep. 17, 2002, available on the World Wide Web at the IETF website address "ietf.org/internet-drafts/draft-ietf-ngtrans-shipworm-08.txt"

Huitema suggests that IPv6 nodes located behind NATs can access "Teredo servers" and "Teredo relays" to learn their "global address" and to obtain connectivity, where clients, servers, and relays can be organized in "Teredo networks". Huitema relies on a complex client server-based interaction between the client (i.e., the IPv6 node) behind the NAT in the private IPv4 address realm, and the Teredo server and Teredo relay on the opposite side of the NAT in the public IPv4 address realm. Hence, the communications between the IPv6 node on the private side of the NAT, and the Teredo server and the Teredo relay on the public side of the NAT, (via the NAT), require that the IPv6 node has a specified path to both the Teredo server and the Teredo relay gateway on the public side; hence, the IPv6 node needs to use the same IPv4 identifier (e.g., UDP port IP address that is being translated by the NAT).

This same IPv4 identifier for communications with the Teredo server and Teredo relay, however, is impossible with symmetric NATs because the Teredo server and Teredo relay each have a distinct corresponding IPv4 public address. In particular, symmetric NATs index their address translation tables not only by private IP address/private UDP port/public IP address/ public UDP port of the packet output by a private IPv4 node, but also by the destination IP address and destination port specified by the packet and destined for the public IPv4 network. Hence, since the Teredo server and Teredo relay have distinct IP addresses, the symmetric NAT will not map the packets to the same private IP address/private UDP port used by the private IPv4 node. Hence, the Huitema solution cannot traverse a symmetric NAT.

SUMMARY OF THE INVENTION

There is a need for an arrangement that enables IPv6 nodes to communicate transparently across an IPv4 network, regardless of whether the IPv6 nodes are separated across the IPv4 network by a symmetrical NAT.

There also is a need for an arrangement that enables IPv6 nodes to transport IPv6 packets across an IPv4 network, without the necessity of each IPv6 node serving as an IPv4 endpoint to store state information.

There also is a need for an arrangement that enables IPv4 connections to be established across a NAT by IPv6 gateways in a manner that minimizes use of NAT resources.

These and other needs are attained by the present invention, where a source IPv6 mobile node is configured for establishing an IPv4 connection with a destination IPv6 router having an IPv4 interface and configured as a Mobility Anchor Point (MAP) according to Hierarchical Mobile IPv6 Protocol. The MAP is configured for assigning a valid IPv6 care-of address to the IPv6 mobile node in response to receiving an IPv4 packet carrying an IPv6 packet requesting a valid care-of address. The IPv4 packet includes IPv4 source and destination addresses, a transport layer source port and transport layer destination port, and a synthetic tag address in the IPv6 source address field. The synthetic tag address includes a unique identifier that enables the MAP to associate the valid IPv6 care-of address with the IPv6 mobile node. Hence, the MAP is configured for forwarding an IPv6 packet, carried via the IPv4 connection from the source IPv6 mobile node, onto an IPv6 network with an IPv6 source address field that specifies the assigned valid IPv6 care-of address. Hence, the MAP enables the IPv6 mobile node to send and receive IPv6 messages via an IPv4 network, regardless of whether the IPv4 network includes a NAT that separates the source and destination IPv6 mobile routers.

One aspect of the present invention provides a method in an IPv6 mobile node. The method includes first generating a tag that uniquely identifies the IPv6 mobile node to an IPv6 gateway. The IPv6 gateway has an IPv4 gateway address and an IPv6 gateway address, and is configured for transferring packets between an IPv4 network via the corresponding IPv4 gateway address and an IPv6 network. The method also includes second generating a first IPv6 packet that specifies a request for a valid IPv6 care-of address that is reachable in the IPv6 network via the IPv6 gateway, where the first IPv6 packet has an IPv6 source address field that specifies the tag and an IPv6 destination address field that specifies the IPv6 gateway address. The method also includes first encapsulating the first IPv6 packet in a first IPv4 packet having an IPv4 header including a destination address field that specifies the IPv4 gateway address, a source address field specifying a mobile node IPv4 address for the IPv6 mobile node, and a transport header having a source port field specifying a prescribed transport layer port for the IPv6 mobile node, and a destination port field specifying a prescribed transport layer port for the IPv6 gateway used for identifying transfer of the IPv6 packet between the IPv4 network and the IPv6 network. The first IPv4 packet is output carrying the first IPv6 packet to the IPv6 gateway via the IPv4 network. The method also includes receiving a second IPv4 packet carrying a second IPv6 packet that indicates an acknowledgement by the IPv6 gateway for the valid IPv6 care-of address. A third IPv6 packet is generated for a destination node reachable via the IPv6 network. The third IPv6 packet is encapsulated in a third IPv4 packet having the IPv4 header, and the third IPv4 packet is output onto the IPv4 network for transfer of the third IPv6 packet onto the IPv6 network by the IPv6 gateway.

Another aspect of the present invention provides a method in an IPv6 router. The method includes attaching to an IPv4 network using an IPv4 gateway address and an IPv6 network using an IPv6 address, and receiving from the IPv4 network a first IPv4 packet. The first IPv4 packet has a destination address field specifying the IPv4 gateway address, a destination port field specifying a prescribed transport layer gateway port, a source address field specifying an IPv4 address and a source port field specifying a second transport layer port. An IPv6 packet is recovered from the IPv4 packet in response to detecting the prescribed transport layer gateway port in the destination port field. The method also includes detecting within the IPv6 packet an IPv6 source address field that specifies an IPv6 tag address that uniquely identifies an IPv6 mobile node, and a request for a valid IPv6 care-of address that is reachable in the IPv6 network via the IPv6 router. The valid IPv6 care-of address is assigned in response to the request, and a second IPv4 packet is output via the IPv4 network. The second IPv4 packet carries a second IPv6 packet generated by the IPv6 router in response to the assigning step and that acknowledges the request for

the valid IPv6 care-of address, the second IPv4 packet specifying the IPv4 address of the IPv6 mobile node in the corresponding destination address field and the second transport layer port in the corresponding destination port field.

Additional advantages and novel features of the invention will be set forth in part in the description which follows and in part will become apparent to those skilled in the art upon examination of the following or may be learned by practice of the invention. The advantages of the present invention may be realized and attained by means of instrumentalities and combinations particularly pointed out in the appended claims.

BRIEF DESCRIPTION OF THE DRAWINGS

Reference is made to the attached drawings, wherein elements having the same reference numeral designations represent like elements throughout and wherein:

FIG. **1** is a diagram illustrating IPv6 mobile nodes establishing an IPv4 connection across an IPv4 network utilizing a network address translator (NAT), according to an embodiment of the present invention.

FIGS. **2**A and **2**B are diagrams illustrating in further detail a IPv6 mobile node and Mobility Anchor Point (MAP)-configured IPv6 router of FIG. **1**, respectively, according to an embodiment of the present invention.

FIG. **3** is a diagram illustrating an IPv6 tag address generated by the IPv6 mobile host of FIG. **2**A.

FIG. **4** is a diagram illustrating an IPv4 packet, output by the source mobile node of FIG. **1** and carrying an IPv6 packet, that encounters address translation by a NAT/PAT and a reverse NAT/PAT.

FIG. **5** is a diagram illustrating exemplary binding cache entries that may be maintained by the MAP-configured IPv6 router of FIG. **2**B, according to an embodiment of the present invention.

FIGS. **6**A, **6**B and **6**C are flow diagrams summarizing the method of sending IPv6 packets across an IPv4 network, according to an embodiment of the present invention.

FIG. **7** is a diagram illustrating IPv6 mobile routers establishing an IPv4 connection across an IPv4 network utilizing a network address translator (NAT) and a reverse NAT, according to an alternate embodiment of the present invention.

BEST MODE FOR CARRYING OUT THE INVENTION

The disclosed embodiment is an improvement of the arrangement disclosed in the above-incorporated parent application No. 10/383,567, filed Mar. 10, 2003 (hereinafter "parent application") directed to tunneling IPv6 packets across an IPv4 network based on use of IPv6 based reverse routing headers. The generation and use of reverse routing headers was published on Jun. 19, 2002 by the inventors as an Internet Draft, "IPv6 Reverse Routing Header and its application to Mobile Networks" available on the World Wide Web at the IETF website address "ietf.org/internet-drafts/draft-thubert-nemo-reverse-routing-header-00.txt" and is incorporated in its entirety herein by reference. A more recent version was published Oct. 11, 2002, available on the World Wide Web at the IETF website address "ietf.org/internet-drafts/draft-thubert-nemo-reverse-routing-header-01.txt" and incorporated in its entirety herein by reference.

The disclosed improvement eliminates the necessity of reverse routing headers by expanding on the use of Hierarchical Mobile IPv6 mobility management (HMIPv6), disclosed in the above-incorporated Internet Draft by Soliman et al.

The disclosed embodiment expands on the use of HMIPv6 to enable an IPv6 mobile node to transfer IPv6 packets across an IPv4 tunnel connection, based on generating unique identifiers as "local care-of addresses"; once the MAP assigns a valid IPv6 care-of address to an IPv6 mobile node and establishes an association between the valid IPv6 care-of address and the IPv4 tunnel connection and/or the unique identifier, the MAP can associate the IPv6 mobile node with its assigned valid IPv6 care-of address.

In addition, the MAP is able to store state information for a given IPv6 mobile node and its corresponding IPv4 tunnel connection. Hence, the state-aware MAP can establish IPv4 connections using state-dependent, connection-oriented protocols, such as TCP, Stream Control Transmission Protocol (SCTP), etc., as well as connectionless-oriented protocols such as UDP.

Hence, the IPv6 mobile node can roam throughout the IPv4 network serviced by the MAP without changing its care-of address, since the MAP is able to maintain state information about the identity, location, connection status, etc., of the IPv6 node.

FIG. **1** is a diagram illustrating a network **10**, where a mobile IPv6 network **12** is configured for establishing an IPv4 tunnel **13** across an Pv4 network **14** to a destination IPv6 network **16**. In particular, the mobile network **12** includes at least a mobile router (MR) **20***a* configured for sending and receiving packets according to IPv6 protocol. The mobile router **20***a* also is configured for communications with a corresponding home agent (HA) **24** configured for forwarding packets, addressed to the mobile router home address, to the mobile router **20***a*'s care of address (CoA), according to Mobile IP Protocol as described in an IETF Draft by Johnson et al., entitled "Mobility Support in IPv6", Jan.20, 2003, available on the World Wide Web at the IETF website address "ietf.ora/internet-drafts/draft-ietf-mobileip-ipv6-21.txt" (the disclosure of which is incorporated in its entirety herein by reference).

The mobile router **20***a* ("MR2") may roam as a single roaming mobile router, or may be the top-level mobile router (TLMR) of a mobile network **12** having attached IPv6 nodes. As illustrated in FIG. **1**, the mobile router **20***a* serves as a TLMR in the mobile network **12** for a mobile router **20***c* ("MR3") and a mobile host (MH) **22***a*. The mobile network **12** also includes, for example, a single mobile host **22***b* that has a separate point of attachment, namely a private IPv4 network **14***c* coupled to the public IPv4 network **14***b* via the NAT/PAT **16***b*, for reaching an IPv6 router of the IPv6 network **16**. As such, the description of the mobile router **20***a* regarding traversing an IPv4 network also applies to the mobile host **22***b*, and as such the references herein to the mobile router **20***a*, the mobile host **22***b*, and generally "mobile node" may be used interchangably.

The mobile router **20***a* is configured for establishing a bidirectional tunnel **28** with its corresponding home agent (HA) **24**, enabling packets sent to the home address of the mobile router **20***a* (e.g., by a correspondent node (CN) **26**) to be forwarded by the home agent **24** to the care-of address for the mobile router **20***a*.

Since the mobile node (e.g., mobile router **20***a* and/or the mobile host **22***b*) is attached to an IPv4 network **14**, as opposed to an IPv6 router, the mobile node (e.g., source mobile router **20***a* and/or the mobile host **22***b*) is configured for establishing an IPv4 tunnel **13** (e.g., a TCP tunnel, UDP tunnel, or SCTP tunnel) with a corresponding IPv6 destina-

tion gateway **20***b*, also referred to as a Mobility Anchor Point (MAP), having a connection on the IPv4 network **14**. Hence, the mobile router **20***a* and the mobile host **22***b* are configured for implementing respective bidirectional tunnel **28***s* with their respective home agents (assume for simplicity the same home agent **24**) via respective IPv4 tunnels, using the IPv6 gateway **20***b* as an endpoint in the IPv4 tunnel **13**.

The IPv4 network **14** may optionally include a Network Address Translator (NAT) and/or a Port Address Translator (PAT) **16***a* or **16***b*. As illustrated in FIG. **1**, the mobile router **20***a* is attached to a private IPv4 network **14***a* and the mobile host **22***b* is attached to a private IPv4 network **14***c*: the mobile router **20***a* and the mobile host **22***b* may obtain their IPv4 addresses (e.g., "10.1.1.2" for MR2) based on a prior configuration (static or unnumbered), Dynamic Host Configuration Protocol (DHCP), or IP Control Protocol (IPCP) for Point-to-Point protocol (PPP) links. The private IPv4 network **14***a* and **14***c* have access to the respective network address translators (NAT) **16***a* and **16***b* having a Port Address Translator (PAT) to enable nodes in the private networks **14***a* and **14***c* to be addressable in the public IPv4 network **14***b*.

The mobile router **20***a* and the mobile host **22***b* also are configured to access the IPv6 gateway **20***b* at a predetermined IPv4 address (e.g., "210.0.2.2"), and a prescribed MAP port (e.g., TCP or UDP port "434") enabling the mobile router **20***a* and the mobile host **22***b* to establish the IPv4 tunnels (e.g., **13**) with the IPv6 gateway **20***b* without the necessity of any discovery protocols. Note that the mobile router **20***a* and the mobile host **22***b* may be configured to store a plurality of MAP IPv4 addresses for multiple IPv6 gateways, in which case the mobile router **20***a* and the mobile host could be configured to locate an optimum IPv6 gateway.

As described above, a problem with establishing an IPv4 tunnel traversing the NAT/PAT **16** is that symmetric NATs **16** index their address translation tables not only by private IP address/private TCP or UDP port/ public IP address/ public TCP or UDP port of the packet being translated for a private IPv4 node (in this case the mobile router **20***a*), but also by the destination IP address and destination port for an ingress packet from the public IPv4 network to the IPv6 gateway **20***b*.

According to the disclosed embodiment, the mobile router **20***a* is configured for initiating a corresponding bidirectional IPv4 tunnel **13** using the same source/destination IPv4 address pair, ensuring that the IPv4 tunnel endpoints **20***a* and **20***b* remain the same. Since the endpoints remain the same, the bidirectional IPv4 tunnel **13** can be reliably maintained across the NAT **16** for multiple IPv6 data streams. The mobile host **22***b* creates the same type of bidirectional IPv4 tunnel using the corresponding source/destination IPv4 address pair.

Further, the mobile router **20***a* and the mobile host **22***b* each generate a synthetic tag address that uniquely identifies the corresponding node. As described below, the synthetic tag address is used as a local care-of address that includes all necessary IPv4 tunnel information to enable the IPv6 gateway **20***b* to uniquely identify the corresponding node. The IPv6 node (e.g., the mobile router **20***a* and/or the mobile host **22***b*) sends via the IPv4 network **14** an IPv6 request, according to HMIPv6 , for a regional care-of address that is routable in the IPv6 network **16**.

The IPv6 gateway **20***b* detects via its IPv4 interface the IPv4 packet, and strips off the IPv4 header in response to detecting the prescribed TCP or UDP destination port, described below. The IPv6 gateway **20***b*, operating as a MAP according to HMIPv6, detects within the recovered IPv6 packet a request for a regional care-of address, and assigns a regional care-of address that is reachable in the IPv6 network **16** via the IPv6 gateway **20***b*. The IPv6 gateway **20***b* creates a binding cache entry that associates the regional care-of address with the synthetic tag address, and the IPv4 and TCP or UDP source and destination information from the received IPv4 packet.

Hence, the mobile node (e.g., **20***a* or **22***b*) is assigned a regional care-of address while it is roaming within the IPv4 network. The binding cache entry enables the IPv6 gateway **20***b* to indentify a source of an IPv6 packet based on the IPv4 header information carrying the IPv6 packet, or the synthetic tag address. Hence, the IPv6 gateway **20***b* can ensure that IPv6 packets from the mobile node **20***a* or **22***b* are output onto the IPv6 network **16** with the corresponding assigned regional care-of address, regardless of whether the mobile node specifies the assigned care-of address in the IPv6 source address destination field, or establishes a new IPv4 tunnel (e.g., roaming from the IPv4 network **14***a* to the IPv4 network **14***c*).

As described below with respect to FIG. **3**, the mobile node (e.g., **20***a* or **22***b*) is configured for generating an IPv6 tag address **30** that includes a prescribed protocol identifier **32**: the protocol identifier **32** is used by the IPv6 gateway **20***b* to identify that the IPv6 packet **30**, received via the IPv4 network **14**, is to be transferred to the IPv6 network **16**.

For the sake of simplicity, the following description will reference the mobile router **20***a* with the understanding that the description applies equally to the mobile host **22***b*.

FIG. **7** is a diagram illustrating a variation of FIG. **1**, where the IPv6 gateway **20***b* is in a private domain of a private IPv4 network **14***c* instead of the public IPv4 network **14***b* of FIG. **1**. In this case, the NAT **16'** at the would own the public address ("210.0.2.2") that is seen as the MAP address by the mobile router **20***a*. The NAT **16'** is preconfigured to 'reverse NAT' all traffic for the TCP or UDP port/public address to the private address ("11.2.2.1") of the MAP **20***b*. Hence in this case both source IPv4 address **102** and destination IP address **103** (and source TCP or UDP port **104** and destination TCP or UDP port **105**) would be stored as part of the binding cache entry by the MAP **20***b* to ensure the MAP **20***b* can properly route any IPv6 packet.

FIG. **2**A is a block diagram illustrating a mobile node (e.g., the mobile router **20***a*) configured for communications with the MAP **20***b*. As described above, this description of FIG. **2**A also is applicable to the mobile host **22***b*. FIG. **2**B is a diagram illustrating the mobility anchor point **20***b* according to an embodiment of the present invention. The mobile router **20***a* and the MAP **20***b* each include an IPv6 portion **50**, an IPv4 portion **52**, and an encapsulation/ decapsulation resource **54**.

The IPv6 portion **50** of the mobile router **20***a* of FIG. **2**A includes a tag address generation resource **56**, an IPv6 header generation and parser resource **58**, a binding update/ care-of address requesting resource **60**, and an IPv6 interface **64**. The IPv6 portion **50** of the mobility anchor point **20***b* includes a Hierarchical Mobile IPv6 (HMIPv6) Resource **57**, the IPv6 header generation and parser resource **58**, a care-of address assigning resource **61**, a source routing resource **62**, and the IPv6 interface **64**.

The tag address generation resource **56** of the mobile router **20***a* is configured for generating the IPv6 tag address **30**, illustrated in FIG. **3**A, that uniquely identifies the mobile router **20***a* to the IPv6 gateway **20***b*. As illustrated in FIG. **3**A, the tag address generation resource **56** is configured for generating an IPv6 tag address. **30** that includes a prescribed

32-bit protocol identifier **32** (e.g., "12.34.56.78"), a 32-bit source IPv4 address **34** of the mobile router **20***a* ("10.1.1.2") a 32-bit public IPv4 gateway address **36** for the IPv6 gateway **20***b* ("210.0.2.2"), a 16-bit source TCP or UDP port **38** ("0001"), and a prescribed 16-bit public TCP or UDP port **40** ("434") for the IPv6 gateway **20***b*. The source IPv4 address **34** and the source TCP or UDP address **38** may be private addresses and ports, based on connecting to the private IPv4 network **14***a*. As described above, the public IPv4 gateway address **36** and the prescribed public TCP or UDP gateway port **40** are known by the mobile router **20***a* upon attachment to the network **14**. If no transport layer header is used in the IPv4 tunnel **13** (e.g,. in the case where the NAT **16** does not include a PAT), then the values **38** and **40** can be set to zero.

Hence, the IPv6 tag address **30** generated by the tag address generation resource **56** provides a unique identifier for use by the MAP in assigning a regional care-of address while the mobile router **20***a* is roaming within the address realm **14** of the MAP **20***b*; note that the mobile router **20***a* may retain the same regional care-of address, even if the mobile router **20***a* moves between the IPv4 network **14***c* and the private IPv4 network **14***a*. Also note that other unique identifiers may be used, for example a randomly-generated 128-bit number or a 128-bit value generated from the node's 48-bit layer **2** (MAC) address.

As shown in FIGS. **2**A and **2**B, the mobile router **20***a* and the MAP **20***b* each include a header generation and parser resource **58** configured for generating an IPv6 header according to mobile IPv6 protocol. The mobile router **20***a* also includes a binding update/care-of address requestor resource **60** configured for requesting a regional care-of address from the MAP **20***b* in response to attaching to a network. In particular, in response to establishing an IPv4 tunnel **13** with the MAP **20***b*, the tag address generation resource **56** generates a unique identifier as an IPv6 tag address **30**, and the header generation and parser resource **58** inserts the IPv6 tag address **30** in the source address field **74** of the IPv6 packet **70** that includes within the payload, generated by the care-of address requestor resource **60**, a request for a valid IPv6 care-of address.

The MAP **20***b* includes an HMIPv6 resource **57**, and a care-of address assigning resource **61** configured for assigning a valid IPv6 care-of address in response to the request from the mobile host **22***b*. The HMIPv6 resource **57**, in response to detecting within the received IPv6 packet **70** a request for a regional care-of address, sends the request to the care-of address assigning resource **61** for assignment of a valid IPv6 care-of address.

As illustrated in FIG. **5**, the care-of address assigning resource **61** includes binding cache entries **71***a*, **71***b*, **71***c* and **71***d*. Each binding cache entry specifies an assigned care-of address (e.g., **73***a*, **73***b*, **73***c* and **73***d*), an identifier (e.g., **75***a*, **75***b*, **75***c*, and **75***d*) for uniquely identifying the corresponding mobile host (e.g., mobile router, mobile host computer) having requested the care-of address, and IPv4 tunnel information (i.e., IPv4 connection state information) **77**. As illustrated in FIG. **5**, the unique identifer **75***a* may specify the TCP or UDP tunnel information from a received IPv4 packet (e.g., **90'**) that includes source address information (e.g., **102**) from the IPv4 source address field **92**, the destination address information (e.g., **36**) from the destination address field **94**, the TCP or UDP source port information (e.g., **104**) from the TCP or UDP source field **104**, and the TCP or UDP destination port information (e.g., **40**) from the TCP or UDP destination field **98**.

The unique identifier **75***b* may alternately specify the IPv6 tag address **30** generated by the corresponding mobile host. Alternately the unique identifier **75***c* may specify a random number generated by the mobile host, or the IPv6 home address **75***d* of the mobile host. Any one of these unique identifiers **75***a*, **75***b*, **75***c*, and/or **75***d* may be used based on preference in implementation.

An advantage of storing the unique identifier **75***c* or **75***d* that has a value distinct from the IPv4 tunnel is that the care-of address assigning resource **61** can still locate the binding cache entry **71***c*, using the unique identifier, even if the mobile host moves from one network **14***c* to another network **14***a* and needs to establish a new IPv4 tunnel. Typically, however, the care-of address assigning resource **61** will send the assigned care-of address (e.g., **71***a*) to the mobile host, such that an assigned care-of address can be associated to a new IPv4 tunnel **13** based on detecting the assigned care-of address within the source address field **74** of an IPv6 packet having been received by a newly-established IPv4 tunnel.

Hence, the care-of address assigning resource **61** can assign any value to a care-of address **73** such that each care-of address will include an address prefix having been advertised in the IPv6 network **16** as reachable via the MAP **20***b*, and a suffix that is assigned by the assigning resource **61**. Hence, the suffix may specify information from the identifier fields **75**, the IPv4 tunnel fields **77**, or alternately may specify a corresponding memory address pointer to the corresponding binding cache entry **71**.

In response to receiving a response from the MAP **20***b* that a care-of address has been assigned, the binding update/care-of address requestor resource **60** of the mobile node having sent the original request sends a binding update message to its corresponding home agent **24**. Typically the care-of address would be received by the mobile node, enabling the mobile node to generate security-based keys using the assigned care-of address, and reducing the necessity that the MAP **20***b* needs to perform source address translation (e.g., tag address to valid care-of address).

In cases where privacy is a concern, or in the case where the MAP **20***b* does not send the actual care-of address to the mobile node but merely specifies that a care-of address has been assigned, the mobile node can specify the tag address **30** within the IPv6 source address field. In this case, the HMIP resource **57**, in response to receiving an IPv6 packet from the the IPv4 network **14** and that specifies a tag address **30** instead of a valid (i.e., routable) IPv6 care-of address, performs an address lookup in the binding cache entries **71**; in response to detecting a matching identifier **75** that matches the detected tag address **30**, the HMIP resource **57** replaces the IPv6 source address field, specifying the tag address **30**, with the valid Care-of Address **73**, and outputs the IPv6 packet onto the IPv6 network **16**.

The mobile router **20** also includes a source routing resource **62** configured for routing received IPv6 packets having routing headers according to Mobile IPv6 Protocol and reverse routing headers as specified by the Internet Draft by Thubert et al.

FIG. **4** is a diagram illustrating an IPv4 packet **90** encapsulating an IPv6 packet **70**, for example a binding update message or a care-of address request message. The message **70** is generated by the header generation and parser resource **58** and the binding update resource/care-of address requestor resource **60**. The IPv6 packet **70** includes a source address field **74** specifying the synthetic tag address **30**, a destination address field **76**, and in this example a destination option **78** specifying the home address (Haddr) of the mobile router

20*a*. The IPv6 packet **70** also includes the payload **88**, for example a care-of address request. The source address field **74** specifies the tag address ("TAG") **30** for the mobile router **20***a*, and the destination address field **76** specifies the IPv6 address ("MAP") **80** for the IPv6 gateway **20***b*.

Once the tag address generation resource **56** generates the IPv6 tag address **30** and the header generator **58** generates the IPv6 header for the corresponding payload **88**, the encapsulation/decapsulation resource **54** encapsulates the IPv6 packet **70** into an IPv4 packet **90**, illustrated in FIG. **4**. The IPv4 packet **90** includes an IP header having a source address field **92** specifying the private IPv4 "Care-of Address" (e.g., "10.1.1.2") 34 of the mobile host (e.g., **20***a*), and a destination address field **94** specifying the public IPv4 gateway address (e.g., "210.0.2.2") **36** of the IPv6 gateway **20***b*. The IPv4 packet **90** also includes a transport header **95** that includes a source TCP or UDP port field **96** specifying a source TCP or UDP address ("01") **38**, and a destination TCP or UDP port field **98** specifying the prescribed MAP port **40**, in this case the known mobile IP port "434". The encapsulation/decapsulation resource **54** of FIG. **2**A supplies the IPv4 packet **90** to an IPv4 interface **100** configured for outputting the IPv4 packet **90** onto the IPv4 network (e.g., **14***a*) according to IPv4 protocol.

As illustrated in FIG. **4**, the traversal of the IPv4 packet **90** via the NAT **16** from the private network **14***a* to the public network **14**b causes the NAT/PAT **16** to modify the IPv4 packet **90** into a translated packet **90'**. In particular, the NAT/PAT **16** translates the values **34** and **38** in the source address field **92** and the source port field **96** with a public IPv4 address value (e.g., "66.88.1.2") **102** and a public port ("02") **104**, respectively. Hence, the IPv6 gateway **20***b* receives the translated packet **90'** via the public IPv4 network **14***b*.

As illustrated in FIG. **7**, if the IPv6 gateway **20***b* is behind a second NAT/PAT **16'**, also referred to as the reverse NAT/PAT **16'**, then the NAT/PAT **16'** translates the values **36** and **40** in the destination address field **94** and the destination port field **98** with a private IPv4 address value (e.g,. "11.2.2.1") **103** and a private port ("03") **105**, respectively. Hence, the IPv6 gateway **20***b* of FIG. **7** receives the translated packet **90"** via the private IPv4 network **14***c*.

The IPv6 gateway **20***b* is configured to recognize itself as being a IPv6 gateway configured for sending IPv6 packets between the IPv6 network **16** and the IPv4 network **14**. Hence, the IPv4 interface **100** of the IPv6 gateway **20***b* of FIG. **2**B is configured for forwarding the translated packet **90'** to the encapsulation/decapsulation resource **54** in response to detecting the prescribed public gateway TCP or UDP port **40** having the value "434" in the destination port field **98**.

In the case of FIG. **7** where the IPv6 gateway resides in the private IPv4 network **14***c*, the IPv4 interface **100** may be configured for forwarding the translated packet **90"** to the encapsulation/decapsulation resource **54** in response to detecting the prescribed private gateway TCP or UDP port **105** having the value "03" in the destination port field **98**. The resource **54** decapsulates the IPv6 packet **70** by stripping off the IPv4 header, and forwarding the IPv6 packet **70** to the IPv6 module **50**.

The header generation and parser resource **58** parses the IPv6 header. In response to detecting the protocol identifier **32** in the IPv6 tag address **30** in the source address field **74**, or the absence of a valid IPv6 address, the header generation and parser resource **58** issues a function call to the HMIPv6 resource **57**. If the HMIPv6 resource **57** detects a request for a new care-of address, the HMIPv6 resource **57** sends the request to the assigning resource **61**; if no request is detected, the HMIPv6 resource **57** determines whether an assigned care-of address already exists by using the tag address in the source address field **74** as a key. If no matching assigned care-of address is detected, the packet is dropped.

Assuming the HMIPv6 resource **57** detects a matching entry **71** specifying a corresponding assigned care-of address **73**, the HMIPv6 resource **57** inserts the assigned care-of address **73** in the IPv6 source address field **74**. The IPv6 interface **64** of the IPv6 gateway **20***b* outputs the modified IPv6 packet (having the valid IPv6 care-of address in the source address field onto the IPv6 network **16**.

Assuming the IPv6 packet is a binding update to the home agent **24**, the home agent **24** receives the modified IPv6 packet in response to detecting the home agent address value (MR2_HA) **80** in the destination address field **76**. The home agent **24** reads Mobile IPv6 home address destination option **78** (i.e., as an index into the binding cache). The home agent **24** can then identify the binding update request **88**, and store the regional care-of address for the mobile router **20***a* in its corresponding binding cache entry. Hence, the traversal of the IPv4 network **14** can be transparent to the home agent **24**.

The IPv6 gateway **20***b* will have advertised the prefix for the valid IPv6 care-of address on the IPv6 network, using existing routing protocols, indicating that the valid IPv6 care-of address should be routed to the IPv6 gateway **20***b*. Hence, the valid care-of address is routable to the IPv6 gateway **20***b*. Consequently, any packet specifying the valid care-of address in the IPv6 destination address field is routed to the IPv6 gateway **20***b* using existing routing protocols.

The IPv6 gateway **20***b*, in response to receiving an IPv6 packet that specifies the valid care-of address in the IPv6 destination address field, recognizes the valid care-of address as being assigned according to the HMIPv6 protocol by the HMIPv6 resource **57** and the assigning resource **61**. The IPv6 gateway **20***b* in response retrieves the IPv4 tunnel information **77** from the binding cache entry **71**, and utilizes its encapsulation/decapsulation resource **54** to generate an IPv4 header that specifies the public address **102** and public port **104** of the mobile router **20***a* in the respective destination headers. The IPv4 interface **100** outputs the packet onto the bidirectional tunnel **13**.

The IPv4 packet, having been translated by the NAT/PAT **16**, specifies the private IP address **34** and the private TCP or UDP port **38** in the destination address and destination port fields, respectively. The mobile router **20***a* can then recover the IPv6 packet **112** based on identifying the source TCP or UDP port specifying the public MAP TCP or UDP value **40**.

FIGS. **6**A, **6**B and **6**C are diagrams summarizing the method of sending IPv6 packets via an IPv4 tunnel according to an embodiment of the present invention. The steps described herein with respect to FIGS. **6**A, **6**B and **6**C can be implemented in the respective mobile nodes as executable code stored on a computer readable medium (e.g., floppy disk, hard disk, EEPROM, CD-ROM, etc.), or propagated via a computer readable transmission medium (e.g., fiber optic cable, electrically-conductive transmission line medium, wireless electromagnetic medium, etc.).

The method in the mobile node (e.g., **20***a* or **22***b*) begins in step **200**, where the IPv4 interface **100** attaches to the IPv4 network **14**a using its prescribed IP address **34** and TCP or UDP port **38**. The tag address generation resource **56** then generates in step **202** a unique identifier for use as an IPv6 source address. As illustrated above with respect to FIG. **3**, the unique identifier may be a combination of TCP or UDP

tunnel information plus a protocol identifier **32**; alternately, as illustrated in FIG. **5**, the unique identifier may be a random number generated by the tag address generation resource **56**, or the IPv6 home address of the mobile node.

The binding update/care of address requestor resource **60** generates in step **204** a request for a valid IPv6 care of address to be supplied by the mobility anchor point (MAP) **20***b*. As described above, the IPv6 request specifies the unique identifier within the IPv6 source address field. The encapsulation resource **54** encapsulates in step **206** the IPv6 request **70** to form an IPv4 packet **90**, as illustrated in FIG. **4**, and outputs the IPv4 packet **90** via the IPv4 tunnel **13**.

The IPv4 interface **100**, in response to receiving in step **208** a packet that specifies the prescribed IPv6 gateway port value "434" in the source port field **104**, sends the IPv4 packet to the encapsulation/decapsulation resource **54**. The header generation and parser resource **58**, in response to detecting in step **208** an IPv6 packet that specifies an acknowledgment by the IPv6 gateway for the valid IPv6 care of address, determines in step **210** whether a valid care of address is specified in the reply.

If in step **210** a valid IPv6 care of address (i.e., an IPv6 address that is reachable in the IPv6 network **16** via the IPv6 gateway **20***b*) is specified in the reply, then the header generation and parser resource **58** generates in step **212** IPv6 packets that specify the assigned care of address in the IPv6 source address field **74**. However if in step **210** a valid IPv6 care of address is not specified within the reply, for example due to security considerations by the IPv6 gateway **20***b*, the header generation and parser resource **58** generates in step **214** IPv6 packets that specify the unique identifier **30** in the IPv6 source address field **74**. As described below with respect to FIG. **6**B, the IPv6 gateway **20***b* substitutes the unique identifier in the source address field **74** with the assigned care of address prior to outputting the IPv6 packet onto the IPv6 network **16**.

The generated IPv6 packet is encapsulated in step **216** with an IPv4 header by the encapsulation/decapsulation resource **54**, and the IPv4 packet **90** is output onto the IPv4 tunnel **13** in step **218**.

Referring to FIG. **6**B, the IPv6 gateway **20***b*, configured for operating according to HMIPv6 protocol, attaches in step **220** to the IPv4 network **14** and the IPv6 network **16**. The IPv6 gateway **20***b* establishes in step **222** a range of regional care of addresses to be assigned to mobile nodes, and advertises the relevant address prefix(es) on the IPv6 network **16** using existing IPv6 routing protocols.

The IPv6 gateway **20***b* receives in step **224** an IPv4 packet from the IPv4 network **14***b* that specifies the TCP or UDP port **40** ("434") for carrying IPv6 packets over an IPv4 tunnel **13**. In response to detecting the prescribed TCP or UDP port in the destination TCP or UDP port fields, the decapsulation resource **54** of the IPv6 gateway **20***b* decapsulates in step **226** the IPv6 packet.

The HMIPv6 resource **57** detects in step **228** the unique identifier for the mobile node, in the request for a regional care of address. The care of address assigning resource **61** assigns in step **230** a regional care of address (e.g., **73***b*), and stores the corresponding binding cache entry **71***b* with the unique identifier **75***b* and the tunnel information **77**, including the IPv4 address and TCP or UDP port of the mobile host, and the IPv4 address and TCP or UDP port of the IPv6 gateway. The HMIPv6 resource **57** generates in step **232** an IPv6 message that acknowledges the request, and sends in step **234** the IPv6 message acknowledging the request via the IPv4 tunnel **13**. As described above, the IPv6 message output in step **234** may optionally include the assigned care of address.

FIG. **6**C illustrates routing by the IPv6 gateway **20***b*. The IPv6 gateway **20***b* receives in step **240** a packet from the IPv4 network **14***b*. The encapsulation/decapsulation resource **54** decapsulates in step **242** the IPv6 packet **70** in response to identifying the TCP or UDP port value **40** ("434") for transporting IPv6 packets over an IPv4 connection. If in step **244** the HMIPv6 resource **57** detects a valid IPv6 source address, the IPv6 interface **64** outputs in step **246** the IPv6 packet onto the IPv6 network **16**.

If in step **244** the HMIPv6 resource **57** does not detect a valid IPv6 address in the IPv6 source address field, the HMIPv6 resource **57** uses the unique identifier in the source address field to search in step **248** for a binding cache entry **71** having an assigned care of address **73** matching the unique identifier specified in the IPv6 source address field. If in step **250** no match is found for the unique identifier in the binding cache entries **71**, the packet is dropped in step **252**.

If in step **250** a matching unique identifier **75** is located, the corresponding assigned IPv6 care of address **73** is inserted in step **254** into the IPv6 source address field, and the modified IPv6 packet is output onto the IPv6 network **16**.

The IPv6 gateway **20***b* also is configured for accessing the binding cache entries for IPv6 packets received in step **256** from the IPv6 network **16**. In particular, if the IPv6 destination address has a prefix that matches the HMIPv6 assigned care of addresses, the HMIPv6 resource **57** accesses the binding cache entries **71** in step **258** to determine a matching IPv6 destination address. The HMIPv6 resource **57** retrieves in step **260** the IPv4 tunnel information **77** from the matching entry **71**. The encapsulation resource **54** generates in step **262** the IPv4 header using the tunnel information **77** from the matching entry **71**, enabling the IPv4 interface **100** to output the encapsulated IPv6 packet onto the IPv4 tunnel **13**.

According to the disclosed embodiment, IPv6 mobile nodes can efficiently establish tunnels across an IPv4 network for transfer of IPv6 packets, regardless of whether the IPv4 network utilizes symmetric NATs. The IPv4 tunnel is always started by the mobile node sending the binding update: hence, the IPv4 tunnel is always available because the mobile node knows that it has its own tunnel at any point in time. If the binding update is sent often enough for the resource to maintain the path, then the path will remain active simply by default execution of Mobile IP protocol by the mobile node. Hence, the IPv4 tunnel is always active with no extra processing resource cost.

In addition, the use of assigned care-of addresses eliminates the necessity that a home agent is co-located with the IPv6 gateway. Further, assignment of care-of addresses the IPv6 gateway enables a mobile node to roam throughout IPv4 networks without needing to disclose its whereabouts to the home agent or other correspondent nodes in the IPv6 network.

Finally, the disclosed arrangement eliminates the necessity of a reverse routing header, enabling the tunneling over the IPv4 network to be implemented between an IPv6 mobile node (e.g., mobile host computer) and an IPv6 router that does not have Mobile IP capabilities. As such, the forwarding of packets via the IPv4 network is transparent to the IPv6 interfaces of the IPv4 endpoints.

While the disclosed embodiment has been described in connection with what is presently considered to be the most practical and preferred embodiment, it is to be understood

that the invention is not limited to the disclosed embodiments, but, on the contrary, is intended to cover various modifications and equivalent arrangements included within the spirit and scope of the appended claims.

What is claimed is:

1. A method in an IPv6 mobile node, the method including:

first generating a tag that uniquely identifies the IPv6 mobile node to an IPv6 gateway having an IPv4 gateway address and an IPv6 gateway address, the IPv6 gateway configured for transferring packets between an IPv4 network via the corresponding IPv4 gateway address and an IPv6 network;

second generating a first IPv6 packet that specifies a request for a valid IPv6 care-of address that is reachable in the IPv6 network via the IPv6 gateway, the first IPv6 packet having an IPv6 source address field that specifies the tag and an IPv6 destination address field that specifies the IPv6 gateway address;

first encapsulating the first IPv6 packet in a first IPv4 packet having an IPv4 header including a destination address field that specifies the IPv4 gateway address, a source address field specifying a mobile node IPv4 address for the IPv6 mobile node, and a transport header having a source port field specifying a prescribed transport layer port for the IPv6 mobile node, and a destination port field specifying a prescribed transport layer port for the IPv6 gateway used for identifying transfer of the IPv6 packet between the IPv4 network and the IPv6 network;

first outputting the first IPv4 packet carrying the first IPv6 packet to the IPv6 gateway via the IPv4 network;

receiving a second IPv4 packet carrying a second IPv6 packet that indicates an acknowledgement by the IPv6 gateway for the valid IPv6 care-of address;

third generating a third IPv6 packet for a destination node reachable via the IPv6 network;

second encapsulating the third IPv6 packet in a third IPv4 packet having the IPv4 header; and

second outputting the third IPv4 packet onto the IPv4 network for transfer of the third IPv6 packet onto the IPv6 network by the IPv6 gateway.

2. The method of claim **1**, wherein the first generating step includes specifying within the tag the mobile node IPv4 address, the prescribed transport layer port for the IPv6 mobile node, the IPv4 gateway address, and the prescribed transport layer port for the IPv6 gateway.

3. The method of claim **2**, wherein the third generating step further includes specifying within the tag a prescribed protocol identifier recognizable by the IPv6 gateway as specifying insertion of the valid IPv6 care-of address in the corresponding IPv6 source address field prior to outputting the corresponding IPv6 packet onto the IPv6 network.

4. The method of claim **3**, wherein the third generating step includes inserting the tag within the IPv6 source address field of the third IPv6 packet.

5. The method of claim **2**, wherein the receiving step includes obtaining the valid IPv6 care-of address from the second IPv6 packet.

6. The method of claim **5**, wherein the third generating step includes inserting the valid IPv6 care-of address in the IPv6 source address field of the third IPv6 packet.

7. The method of claim **1**, wherein the mobile node IPv4 address is a private IPv4 address, the prescribed transport layer port for the IPv6 mobile node is a private TCP port, the IPv4 gateway is a public IPv4 address, and the prescribed transport layer port for the IPv6 gateway is a public TCP port.

8. A method in an IPv6 router, the method including:

attaching to an IPv4 network using an IPv4 gateway address and an IPv6 network using an IPv6 address;

receiving from the IPv4 network a first IPv4 packet having a destination address field specifying the IPv4 gateway address, a destination port field specifying a prescribed transport layer gateway port, a source address field specifying an IPv4 address and a source port field specifying a second transport layer port;

recovering an IPv6 packet from the IPv4 packet in response to detecting the prescribed transport layer gateway port in the destination port field;

detecting within the IPv6 packet an IPv6 source address field that specifies an IPv6 tag address that uniquely identifies an IPv6 mobile node, and a request for a valid IPv6 care-of address that is reachable in the IPv6 network via the IPv6 router;

assigning the valid IPv6 care-of address in response to the request; and

outputting via the IPv4 network a second IPv4 packet, the second IPv4 packet carrying a second IPv6 packet generated by the IPv6 router in response to the assigning step and that acknowledges the request for the valid IPv6 care-of address, the second IPv4 packet specifying the IPv4 address of the IPv6 mobile node in the corresponding destination address field and the second transport layer port in the corresponding destination port field.

9. The method of claim **8**, wherein the assigning includes generating a binding entry that associates the valid IPv6 care-of address with at least a prescribed portion of the IPv6 tag address that uniquely identifies the IPv6 mobile node.

10. The method of claim **9**, wherein the prescribed portion of the IPv6 tag address includes a second IPv4 address used by the IPv6 mobile node as a source address for identifying the IPv6 mobile node, a third IPv4 address used by the IPv6 mobile node as a destination address for identifying the IPv6 router, a third transport layer port value used as a source port by the IPv6 mobile node in establishing an IPv4 connection with the IPv6 router, and a fourth transport layer port value used by the IPv6 mobile node as a destination port for identifying the IPv6 router via the IPv4 connection.

11. The method of claim **10**, wherein the second IPv4 address and the third transport layer port specified in the IPv6 tag address are private values and the IPv4 address and the second transport layer port are public values, the generating further including associating within the binding entry the IPv4 address and the second transport layer port.

12. The method of claim **8**, wherein the outputting step includes inserting within the second IPv6 packet the valid IPv6 care-of address for use by the IPv6 mobile node.

13. The method of claim **9**, further comprising:

receiving from the IPv4 network a third IPv4 packet having a destination address field specifying the IPv4 gateway address, and a destination port field specifying the prescribed transport layer gateway port;

recovering a third IPv6 packet from the IPv4 packet, in response to detecting the prescribed transport layer gateway port in the destination port field, that specifies the IPv6 tag address in the corresponding IPv6 source address field and a valid IPv6 address in a corresponding IPv6 destination address field;

accessing the binding entry in response to detecting that the IPv6 tag address is not a valid IPv6 address, and

retrieving the valid IPv6 care-of address from the binding entry based on detecting a match between the IPv6 tag address in the corresponding IPv6 source address field of the third IPv6 packet and the corresponding at least a prescribed portion of the IPv6 tag address;

outputting the third IPv6 packet, after having overwritten the valid IPv6 care-of address into the corresponding IPv6 source address field, onto the IPv6 network.

14. The method of claim **8**, wherein the assigning step includes generating a binding entry that associates the valid IPv6 care-of address with at least one of at least a prescribed portion of the IPv6 tag address that uniquely identifies the IPv6 mobile node, and IPv4 connection state information including the IPv4 gateway address, a first TCP port as the prescribed transport layer gateway port, the IPv4 address and a second TCP port as the second transport layer port.

15. The method of claim **14**, further comprising:

receiving a third IPv6 packet from the IPv6 network and that has a corresponding IPv6 destination address field that specifies the valid IPv6 care-of address;

retrieving the IPv4 connection state information from the binding entry based on the valid IPv6 care-of address specified in the IPv6 destination address field of the third IPv6 packet;

encapsulating the third IPv6 packet in a third IPv4 packet that specifies the IPv4 connection state information, including specifying the IPv4 address and the second transport layer port in the corresponding destination address field and the corresponding destination port field, respectively; and

outputting the third IPv4 packet onto the IPv4 network.

16. An IPv6 mobile node comprising:

first means for generating a tag that uniquely identifies the IPv6 mobile node to an IPv6 gateway having an IPv4 gateway address and an IPv6 gateway address, the IPv6 gateway configured for transferring packets between an IPv4 network via the corresponding IPv4 gateway address and an IPv6 network;

second means for generating a first IPv6 packet that specifies a request for a valid IPv6 care-of address that is reachable in the IPv6 network via the IPv6 gateway, the first IPv6 packet having an IPv6 source address field that specifies the tag and an IPv6 destination address field that specifies the IPv6 gateway address;

means for encapsulating the first IPv6 packet in a first IPv4 packet having an IPv4 header including a destination address field that specifies the IPv4 gateway address, a source address field specifying a mobile node IPv4 address for the IPv6 mobile node, and a transport header having a source port field specifying a prescribed transport layer port for the IPv6 mobile node, and a destination port field specifying a prescribed transport layer port for the IPv6 gateway used for identifying transfer of the IPv6 packet between the IPv4 network and the IPv6 network;

means for outputting the first IPv4 packet carrying the first IPv6 packet to the IPv6 gateway via the IPv4 network, the outputting means configured for receiving a second IPv4 packet carrying a second IPv6 packet that indicates an acknowledgement by the IPv6 gateway for the valid IPv6 care-of address;

the second means configured for generating a third Pv6 packet for a destination node reachable via the IPv6 network;

the encapsulating means configured for encapsulating the third IPv6 packet in a third IPv4 packet having the IPv4 header; and

the outputting means configured for outputting the third IPv4 packet onto the IPv4 network for transfer of the third IPv6 packet onto the IPv6 network by the IPv6 gateway.

17. The node of claim **16**, wherein the first means is configured for specifying within the tag the mobile node IPv4 address, the prescribed transport layer port for the IPv6 mobile node, the IPv4 gateway address, and the prescribed transport layer port for the IPv6 gateway.

18. The node of claim **17**, wherein first means is configured for specifying within the tag a prescribed protocol identifier recognizable by the IPv6 gateway as specifying insertion of the valid IPv6 care-of address in the corresponding IPv6 source address field prior to outputting the corresponding IPv6 packet onto the IPv6 network.

19. The node of claim **18**, wherein the second means is configured for inserting the tag within the IPv6 source address field of the third IPv6 packet.

20. The node of claim **17**, wherein the outputting means is configured for obtaining the valid IPv6 care-of address from the second IPv6 packet.

21. The node of claim **20**, wherein the second means is configured for inserting the valid IPv6 care-of address in the IPv6 source address field of the third IPv6 packet.

22. The node of claim **16**, wherein the mobile node IPv4 address is a private IPv4 address, the prescribed transport layer port for the IPv6 mobile node is a private TCP port, the IPv4 gateway is a public IPv4 address, and the prescribed transport layer port for the IPv6 gateway is a public TCP port.

23. An IPv6 router including:

means for connecting to an IPv4 network using an IPv4 gateway address and an IPv6 network using an IPv6 address, the connecting means configured for receiving from the IPv4 network a first IPv4 packet having a destination address field specifying the IPv4 gateway address, a destination port field specifying a prescribed transport layer gateway port, a source address field specifying an IPv4 address and a source port field specifying a second transport layer port;

means for recovering an IPv6 packet from the IPv4 packet in response to detecting the prescribed transport layer gateway port in the destination port field;

means for detecting within the IPv6 packet an IPv6 source address field that specifies an IPv6 tag address that uniquely identifies an IPv6 mobile node, and a request for a valid IPv6 care-of address that is reachable in the IPv6 network via the IPv6 router;

means for assigning the valid IPv6 care-of address in response to the request;

the connecting means configured for outputting via the IPv4 network a second IPv4 packet, the second IPv4 packet carrying a second IPv6 packet generated by the IPv6 router and that acknowledges the request for the valid IPv6 care-of address, the second IPv4 packet specifying the IPv4 address of the IPv6 mobile node in the corresponding destination address field and the second transport layer port in the corresponding destination port field.

24. The router of claim **23**, wherein the assigning means is configured for generating a binding entry that associates the valid IPv6 care-of address with at least a prescribed portion of the IPv6 tag address that uniquely identifies the IPv6 mobile node.

25. The router of claim 24, wherein the prescribed portion of the IPv6 tag address includes a second IPv4 address used by the IPv6 mobile node as a source address for identifying the IPv6 mobile node, a third IPv4 address used by the IPv6 mobile node as a destination address for identifying the IPv6 router, a third transport layer port value used as a source port by the IPv6 mobile node in establishing an IPv4 connection with the IPv6 router, and a fourth transport layer port value used by the IPv6 mobile node as a destination port for identifying the IPv6 router via the IPv4 connection.

26. The router of claim 25, wherein the second IPv4 address and the third transport layer port specified in the IPv6 tag address are private values and the IPv4 address and the second transport layer port are public values, the assigning means configured for associating within the binding entry the IPv4 address and the second transport layer port.

27. The router of claim 23, wherein the connecting means configured for inserting within the second IPv6 packet the valid IPv6 care-of address for use by the IPv6 mobile node.

28. The router of claim 24, wherein:

the connecting means is configured for receiving from the IPv4 network a third IPv4 packet having a destination address field specifying the IPv4 gateway address, and a destination port field specifying the prescribed transport layer gateway port;

the recovering means is configured for recovering a third IPv6 packet from the IPv4 packet, in response to detecting the prescribed transport layer gateway port in the destination port field, that specifies the IPv6 tag address in the corresponding IPv6 source address field and a valid IPv6 address in a corresponding IPv6 destination address field;

the connecting means is configured for accessing the binding entry in response to detecting that the IPv6 tag address is not a valid IPv6 address, and retrieving the valid IPv6 care-of address from the binding entry based on detecting a match between the IPv6 tag address in the corresponding IPv6 source address field of the third IPv6 packet and the corresponding at least a prescribed portion of the IPv6 tag address;

the connecting means configured for outputting the third IPv6 packet, after having overwritten the valid IPv6 care-of address into the corresponding IPv6 source address field, onto the IPv6 network.

29. The router of claim 23, wherein the assigning means is configured for generating a binding entry that associates the valid IPv6 care-of address with at least one of at least a prescribed portion of the IPv6 tag address that uniquely identifies the IPv6 mobile node, and IPv4 connection state information including the IPv4 gateway address, a first TCP port as the prescribed transport layer gateway port, the IPv4 address and a second TCP port as the second transport layer port.

30. The router of claim 29, wherein:

the connecting means is configured for receiving a third IPv6 packet from the IPv6 network and that has a corresponding IPv6 destination address field that specifies the valid IPv6 care-of address;

the connecting means including means for retrieving the IPv4 connection state information from the binding entry based on the valid IPv6 care-of address specified in the IPv6 destination address field of the third IPv6 packet;

the connecting means including means for encapsulating the third IPv6 packet in a third IPv4 packet that specifies the IPv4 connection state information, including specifying the IPv4 address and the second transport layer port in the corresponding destination address field and the corresponding destination port field, respectively;

the connecting means outputting the third IPv4 packet onto the IPv4 network.

31. A computer readable medium having stored thereon sequences of instructions for outputting an IPv4 packet by an IPv6 mobile node, the sequences of instructions including instructions for:

first generating a tag that uniquely identifies the IPv6 mobile node to an IPv6 gateway having an IPv4 gateway address and an IPv6 gateway address, the IPv6 gateway configured for transferring packets between an IPv4 network via the corresponding IPv4 gateway address and an IPv6 network;

second generating a first IPv6 packet that specifies a request for a valid IPv6 care-of address that is reachable in the IPv6 network via the IPv6 gateway, the first IPv6 packet having an IPv6 source address field that specifies the tag and an IPv6 destination address field that specifies the IPv6 gateway address;

first encapsulating the first IPv6 packet in a first IPv4 packet having an IPv4 header including a destination address field that specifies the IPv4 gateway address, a source address field specifying a mobile node IPv4 address for the IPv6 mobile node, and a transport header having a source port field specifying a prescribed transport layer port for the IPv6 mobile node, and a destination port field specifying a prescribed transport layer port for the IPv6 gateway used for identifying transfer of the IPv6 packet between the IPv4 network and the IPv6 network;

first outputting the first IPv4 packet carrying the first IPv6 packet to the IPv6 gateway via the IPv4 network;

receiving a second IPv4 packet carrying a second IPv6 packet that indicates an acknowledgement by the IPv6 gateway for the valid IPv6 care-of address;

third generating a third IPv6 packet for a destination node reachable via the IPv6 network;

second encapsulating the third IPv6 packet in a third IPv4 packet having the IPv4 header; and

second outputting the third IPv4 packet onto the IPv4 network for transfer of the third IPv6 packet onto the IPv6 network by the IPv6 gateway.

32. The medium of claim 31, wherein the first generating step includes specifying within the tag the mobile node IPv4 address, the prescribed transport layer port for the IPv6 mobile node, the IPv4 gateway address, and the prescribed transport layer port for the IPv6 gateway.

33. The medium of claim 32, wherein the third generating step further includes specifying within the tag a prescribed protocol identifier recognizable by the IPv6 gateway as specifying insertion of the valid IPv6 care-of address in the corresponding IPv6 source address field prior to outputting the corresponding IPv6 packet onto the IPv6 network.

34. The medium of claim 33, wherein the third generating step includes inserting the tag within the IPv6 source address field of the third IPv6 packet.

35. The medium of claim 32, wherein the receiving step includes obtaining the valid IPv6 care-of address from the second IPv6 packet.

36. The medium of claim 35, wherein the third generating step includes inserting the valid IPv6 care-of address in the IPv6 source address field of the third IPv6 packet.

37. The medium of claim 31, wherein the mobile node IPv4 address is a private IPv4 address, the prescribed transport layer port for the IPv6 mobile node is a private

TCP port, the IPv4 gateway is a public IPv4 address, and the prescribed transport layer port for the IPv6 gateway is a public TCP port.

38. A computer readable medium having stored thereon sequences of instructions for outputting an IPv4 packet by an IPv6 router, the sequences of instructions including instructions for:

attaching to an IPv4 network using an IPv4 gateway address and an IPv6 network using an IPv6 address;

receiving from the IPv4 network a first IPv4 packet having a destination address field specifying the IPv4 gateway address, a destination port field specifying a prescribed transport layer gateway port, a source address field specifying an IPv4 address and a source port field specifying a second transport layer port;

recovering an IPv6 packet from the IPv4 packet in response to detecting the prescribed transport layer gateway port in the destination port field;

detecting within the IPv6 packet an IPv6 source address field that specifies an IPv6 tag address that uniquely identifies an IPv6 mobile node, and a request for a valid IPv6 care-of address that is reachable in the IPv6 network via the IPv6 router;

assigning the valid IPv6 care-of address in response to the request; and

outputting via the IPv4 network a second IPv4 packet, the second IPv4 packet carrying a second IPv6 packet generated by the IPv6 router in response to the assigning step and that acknowledges the request for the valid IPv6 care-of address, the second IPv4 packet specifying the IPv4 address of the IPv6 mobile node in the corresponding destination address field and the second transport layer port in the corresponding destination port field.

39. The medium of claim **38**, wherein the assigning includes generating a binding entry that associates the valid IPv6 care-of address with at least a prescribed portion of the IPv6 tag address that uniquely identifies the IPv6 mobile node.

40. The medium of claim **39**, wherein the prescribed portion of the IPv6 tag address includes a second IPv4 address used by the IPv6 mobile node as a source address for identifying the IPv6 mobile node, a third IPv4 address used by the IPv6 mobile node as a destination address for identifying the IPv6 router, a third transport layer port value used as a source port by the IPv6 mobile node in establishing an IPv4 connection with the IPv6 router, and a fourth transport layer port value used by the IPv6 mobile node as a destination port for identifying the IPv6 router via the IPv4 connection.

41. The medium of claim **40**, wherein the second IPv4 address and the and the second transport layer port are public values, the generating further including associating within the binding entry the IPv4 address and the second transport layer port.

42. The medium of claim **38**, wherein the outputting step includes inserting within the second IPv6 packet the valid IPv6 care-of address for use by the IPv6 mobile node.

43. The medium of claim **39**, further comprising instructions for:

receiving from the IPv4 network a third IPv4 packet having a destination address field specifying the IPv4 gateway address, and a destination port field specifying the prescribed transport layer gateway port;

recovering a third IPv6 packet from the IPv4 packet, in response to detecting the prescribed transport layer gateway port in the destination port field, that specifies the IPv6 tag address in the corresponding IPv6 source address field and a valid IPv6 address in a corresponding IPv6 destination address field;

accessing the binding entry in response to detecting that the IPv6 tag address is not a valid IPv6 address, and retrieving the valid IPv6 care-of address from the binding entry based on detecting a match between the IPv6 tag address in the corresponding IPv6 source address field of the third IPv6 packet and the corresponding at least a prescribed portion of the IPv6 tag address;

outputting the third IPv6 packet, after having overwritten the valid IPv6 care-of address into the corresponding IPv6 source address field, onto the IPv6 network.

44. The medium of claim **38**, wherein the assigning step includes generating a binding entry that associates the valid IPv6 care-of address with at least one of at least a prescribed portion of the IPv6 tag address that uniquely identifies the IPv6 mobile node, and IPv4 connection state information including the IPv4 gateway address, a first TCP port as the prescribed transport layer gateway port, the IPv4 address and a second TCP port as the second transport layer port.

45. The medium of claim **44**, further comprising instructions for:

receiving a third IPv6 packet from the IPv6 network and that has a corresponding IPv6 destination address field that specifies the valid IPv6 care-of address;

retrieving the IPv4 connection state information from the binding entry based on the valid IPv6 care-of address specified in the IPv6 destination address field of the third IPv6 packet;

encapsulating the third IPv6 packet in a third IPv4 packet that specifies the IPv4 connection state information, including specifying the IPv4 address and the second transport layer port in the corresponding destination address field and the corresponding destination port field, respectively; and

outputting the third IPv4 packet onto the IPv4 network.

* * * * *