IN THE UNITED STATES DISTRICT COURT
FOR THE WESTERN DISTRICT OF TEXAS
AUSTIN DIVISION

ICPillar LLC, Plaintiff, v. Arm Ltd. and Arm, Inc., Defendants.	Civil Action No. 1:23-cv-00282 **JURY TRIAL DEMANDED**

COMPLAINT FOR PATENT INFRINGEMENT

Introduction

1. Plaintiff ICPillar LLC ("ICPillar") is a technology licensing company founded by Daniel J. Seidner, the sole inventor of the patents in ICPillar's portfolio. ICPillar holds several patents, including U.S. Patent Nos. 8,924,899 and 9,367,657, both entitled "System and Method for Universal Control of Electronic Devices" (the "Asserted Patents").[1] Defendants Arm Ltd. and its U.S. subsidiary Arm, Inc. (collectively "Arm" or "Defendants") have infringed and continue to infringe these patents by making, using, selling, and offering to sell their systems and methods for designing integrated circuits, including but not limited to recent and current versions of Arm's IP Configuration Tools, Arm Socrates IP Tools, and Arm Development Studio (including what is currently called the Pack Manager) (the "Accused Design Tools"). ICPillar files this lawsuit to hold Arm accountable and to recover reasonable royalty damages for Arm's patent infringement.

Plaintiff ICPillar and the Asserted Patents

2. ICPillar LLC is a Delaware limited liability company with places of business in Houston, Texas, and Los Angeles, California. ICPillar was formed by Mr. Seidner, the company's sole owner, for the purpose of enforcing and licensing his patents. Mr. Seidner is an innovator and entrepreneur with over 25 years of experience designing, developing, and optimizing software and hardware solutions for high-tech applications. He is the inventor of the systems and methods disclosed and claimed by the Asserted Patents, including what he collectively described as the "Fabless Development Kit" (the "FDK"). The FDK enables the unified design of integrated circuit hardware and software.

[1] Mr. Seidner is the named inventor on both Asserted Patents, as well as U.S. Patent No. 10,216,174 ("System and Method for Universal Control of Electronic Devices"), and EP3000239A4 (same title) and a pending divisional application.

3. In the lead up to his inventions, Mr. Seidner became aware of the limitations and challenges of the then-existing integrated circuit design processes, which required multiple stages of development and lengthy development time. Due to the proprietary nature of integrated circuit designs and poor documentation, existing designs were typically not reusable, even when the integrated circuit design has the same or similar functionalities. Mr. Seidner realized that the then-current design processes for integrated circuits required, for each new microcontroller application, all-new hardware and software to be designed from the ground up. This resulted in expensive, cumbersome, and overly time-consuming processes. For example, each time a new or modified integrated circuit design was needed, the designer would need to repeat most of the design process by developing all-new hardware and, additionally, all-new software to work with the new design. The designer would then need to design, fabricate, test, and debug the hardware and then write, test, and debug the software. This expensive and lengthy process hindered the advancement of new technologies and slowed the time to market of new products. These problems were compounded by the growing complexity of integrated circuits and the many subsystems that needed to be designed and/or redesigned for any given hardware platform.

4. To address these and other shortcomings in the then-existing technology, Mr. Seidner developed a new design technique that uses the FDK to significantly reduce the time needed to design an integrated circuit. Using the FDK, "IC device[] components may be standardized and designed based on functionality," '899 col. 4:39-40, thus permitting reuse of existing components or circuit designs that have already been tested and debugged. "A developer can select functionality of their device and an IC can be designed off the standard components … [and] because standard IC components are used, standard software can be used to control and run on the IC devices." *Id.* col. 4:41-45. The FDK therefore enables an efficient and

unified design of integrated circuit hardware and software by allowing the designer to select from among various standardized components, as well as adding proprietary and specialized components, and to then output the entire design (including hardware and corresponding software) without the need to rebuild or design every individual functional specification of the IC device from the ground up. As a result, the FDK permits designers to create a wide range of new integrated circuits in a significantly shortened timeframe.

Defendants and their Accused Design Tools

5. Defendant Arm Ltd. is a corporation organized under the laws of the United Kingdom that identifies its principal place of business and headquarters in Cambridge, England, where the company directs and oversees all acts of infringement by affiliates and subsidiaries occurring within the United States. Defendant Arm, Inc. is a Delaware corporation that identifies its corporate headquarters in San Jose, California. The infringing activities of Arm, Inc. within the United States occur in and are directed from the company's facilities in Texas, including in Austin. Defendants design integrated circuits using the Accused Design Tools and also design and provide development tools and platforms that allow Arm's third-party licensees to design integrated circuits. Among the various processors that Defendants designed using the Accused Design Tools are recent customized versions based on the Arm Cortex and Neoverse processor architectures, including the "Juno Arm Development Platform SoC," "ARM Musca-S1 Test Chip," "ARM Musca-A Test Chip," and the "ARM Neoverse SoC." Arm Development Studio Getting Started Guide (Version 2021.2) at 18 ("Arm® Development Studio provides several FVPs, covering a range of processors in the Cortex® family"); Arm Socrates User Guide (Version 1.5) at 1-13:

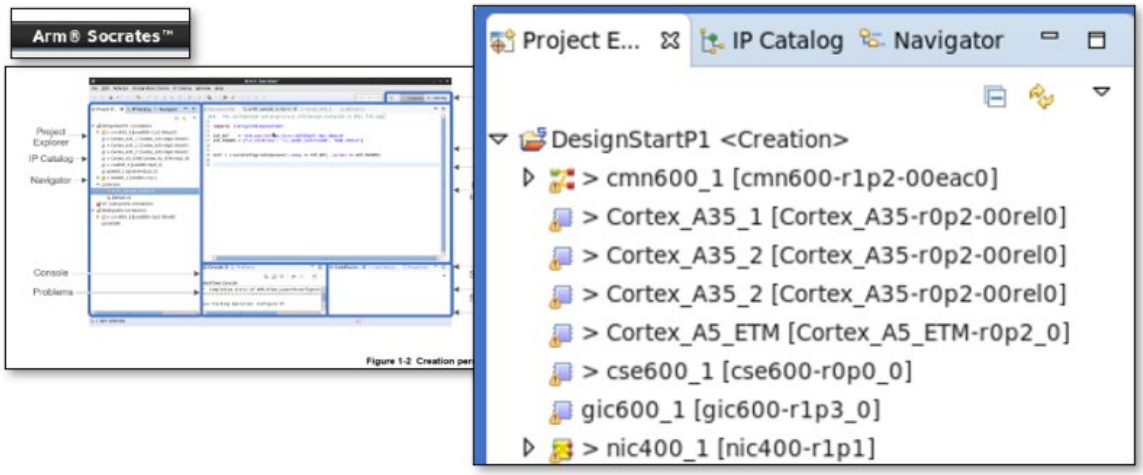

Arm Musca-S1 Test Chip and Board Technical Reference Manual (Version 0000-01) at 1-14:

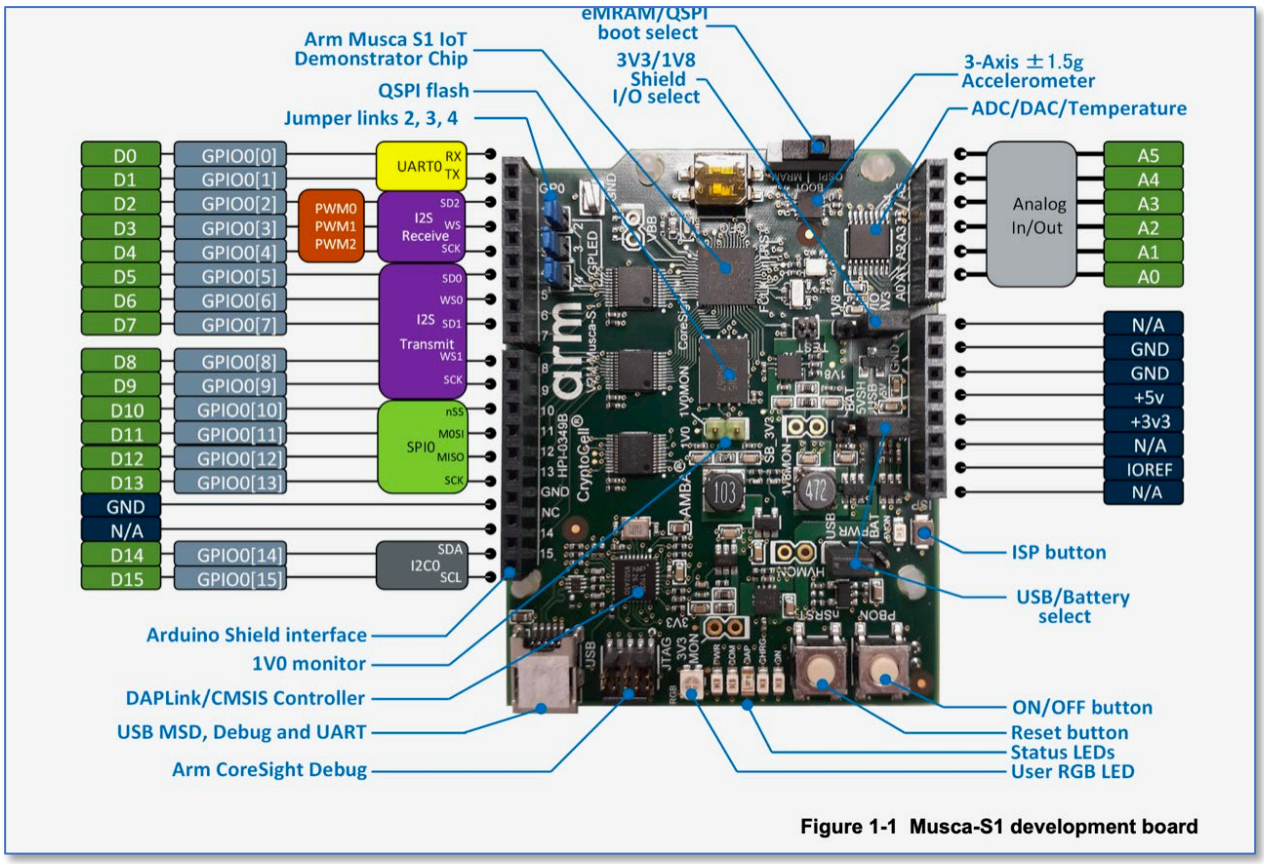

Figure 1-1 Musca-S1 development board

6. Defendants knew of, or were willfully blind to the existence of, the Asserted Patents prior to the filing of this action, as Plaintiff expects to establish through discovery, giving rise to assertions of pre-suit willfulness and indirect infringement. Additionally, Defendants

cannot dispute that they were aware of the Asserted Patents no later than the date by which they were notified of this complaint, and such knowledge is anticipated to support a subsequent assertion by Plaintiff of post-filing willfulness and indirect infringement.

Jurisdiction and Venue

7. This is an action for patent infringement arising under the patent laws of the United States, 35 U.S.C. §§ 271 and 281, *et seq*. The Court has subject matter jurisdiction over this action under 28 U.S.C. §§ 1331 and 1338(a).

8. This Court has personal jurisdiction over Defendant Arm Ltd. and Defendant Arm Inc. in this action because both Defendants have committed acts within this District giving rise to this action and have established minimum contacts with this forum such that the exercise of jurisdiction over Defendants would not offend traditional notions of fair play and substantial justice. Defendants, directly and through subsidiaries or intermediaries, have committed and continue to commit acts of infringement in this District by, among other things, making and using the claimed methods and systems of the asserted patents. Furthermore, to the extent that Defendant Arm Ltd. contends, incorrectly, that it is not subject to the general jurisdiction of any state court, jurisdiction over Arm Ltd. is appropriate pursuant to Fed. R. Civ. P. 4(k)(2) because Arm Ltd. has established minimum contacts with the United States as a whole such that the exercise of jurisdiction over Arm Ltd. would not offend traditional notions of fair play and substantial justice.

9. Venue is proper in this District as to Defendant Arm Ltd. because it is a foreign entity. 28 U.S.C. § 1391(c)(3) ("[A] defendant not resident in the United States may be sued in any judicial district."). Alternatively, venue is proper as to Arm Ltd. for the same reasons set forth for Arm Inc., because Arm Ltd. controls and directs the accused actions of Arm Inc. in its Austin facility, and that facility is a regular and established place of business of both entities.

Venue is proper in this District as to Defendant Arm Inc. under 28 U.S.C. §§ 1391 and 1400(b) because Arm Inc. has committed acts of infringement in this district and maintains a regular and established place of business in this district at Encino Trace, 5707 Southwest Pkwy Bld. 1 Suite 100, Austin, TX 78735.

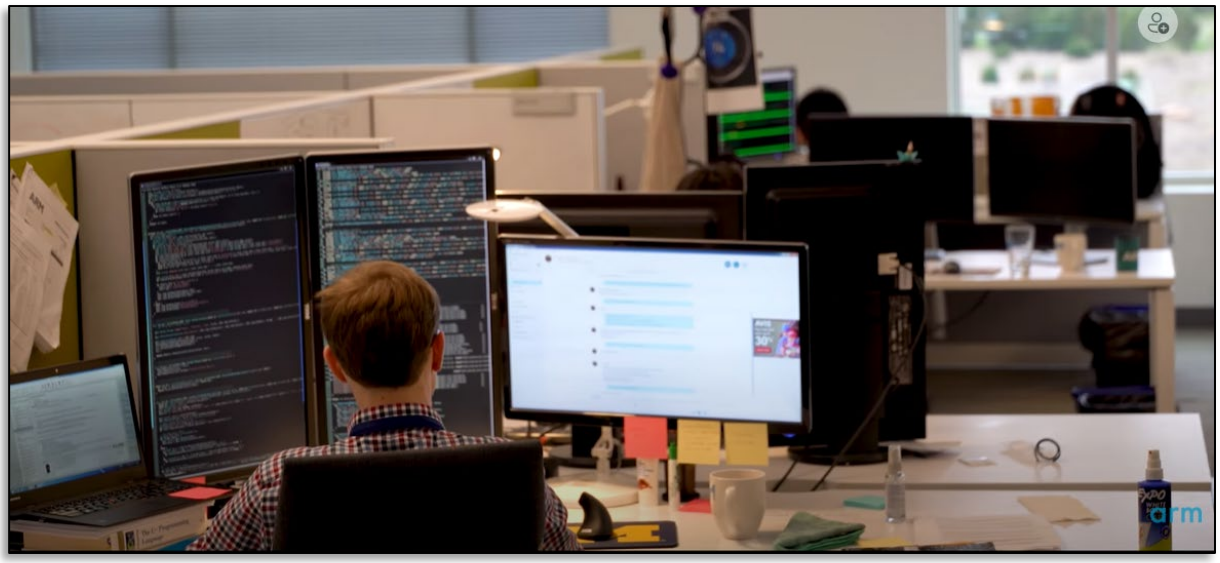

Arm, *Welcome to Arm – Austin, Texas USA*, YouTube (Jun. 15, 2018) (video)[2]; *id.* (video description: "The Arm Austin office employs staff from across all divisions of Arm.").

[2] https://www.youtube.com/watch?v=FiEwL_-GZww.

According to Arm's own website, "[m]ore than 800 people work out of the Austin office" of Arm, and the "Austin [office] works across nearly all of Arm's groups, including Central Engineering Systems, productivity engineering, engineering for open-source software, engineering operations, research, architecture and technology, physical design, legal, IT, and people." Further, concerning the nature and scope of its Austin activities, Arm asserts: "you name it, and Austin is pretty much guaranteed to be involved."[3]

COUNT I
Infringement of the '899 patent

10. ICPillar realleges and incorporates by reference paragraphs 1-9 of this Complaint.

11. On December 30, 2014, the United States Patent and Trademark Office issued U.S. Patent No. 8,924,899 (the '899 patent), entitled "System and Method for Universal Control of Electronic Devices." Ex. 1. Plaintiff ICPillar owns all right, title, and interest in the '899 patent, including the right to enforce the patent against infringers and collect damages for past and ongoing infringement.

12. Each claim of the '899 patent is valid, enforceable, and patent eligible under Section 101 of the Patent Act. The '899 patent is directed to the technical field of designing hardware and software for integrated circuits, including custom systems on chip (SoCs). The '899 patent discloses and claims systems and methods that address technical problems that are inherent in and derive from prior art method and systems that were disjointed in the processes and tools used for such design and that required countless engineering hours to design new processes and tools to enable the design of new integrated circuits. The '899 patent addressed these technical problems with a technical solution. The patent provides a system and method that enables the design and development of hardware and software for integrated circuits.

[3] https://careers.arm.com/usa-austin-office (last visited March 10, 2023).

Additionally, the claims of the ’899 patent are novel and non-obvious and recite elements and steps that were not routine or conventional at the time of the invention, either individually or in combination.

13. Each of Defendants Arm Ltd. and Arm Inc. has directly infringed the claims of the ’899 patent by making and using the claimed systems and methods in the United States and in this District. Defendants infringe multiple claims of the ’899 patent through their use of the Accused Design Tools, including but not limited to Claims 1 and 8.

14. **Claim 1** recites: “A computer implemented method for designing an integrated circuit which controls a device when the integrated circuit integrated into the device comprising: receiving a selection of categorized input and output characteristics of an electronic device into a memory of a processor programmed by software commands to design a hardware integrated circuit and associated operating software for controlling the integrated circuit to control the electronic device; analyzing by the processor the selection of categorized input and output characteristics of the electronic device; outputting by the processor of a hardware integrated circuit design based on the selection of input and output characteristics of the device; and outputting by the processor software programming commands to be executed by the hardware integrated circuit for controlling the electronic device in accordance with the selection of categorized input and output characteristics of the electronic device.” ’899 col. 18:38-56. Defendants infringe this claim, according to the following infringement theory, which is provided as an example and is not limiting. In developing, testing, and using the Accused Design Tools:

- Arm has performed and continues to perform “*a computer-implemented method for designing an integrated circuit which controls a device when the integrated circuit is incorporated into the device*.”[4] Arm Socrates User Guide (Version 1.5) at 1-11 (“Socrates

[4] This allegation is made to the extent the preamble of claim 1 is found to be limiting.

IP Tooling platform is an environment for exploring, configuring, and building Arm IP ready for integration into a *System on Chip* (SoC)." (italics in original); *id.* at 4-33 (showing "Cortex-A35 sample configure and build script"). Examples of controlled devices include computers, smartphones, wearables, and IoT nodes (and/or their subsystems, chips, or boards). Furthermore, that method includes the performance of the remaining elements of the claim, as set forth below.

- Arm has performed and continues to perform the act of "*receiving a selection of categorized input and output characteristics of an electronic device*" when Arm uses the Accused Design Tools to select IP from the catalog of Arm and third-party IP and when Arm selects and specifies the configuration options and parameters for the integrated circuit's hardware components and operating software. Arm Socrates User Guide (Version 1.5) at 7 ("Socrates enables you to browse, configure, (with configuration space validation), and build Arm IP, including Arm Interconnect IP. The generated RTL and IP-XACT can then be integrated into Arm-based systems …Socrates provides several types of technical information for each supported Arm IP, and a standardized way to configure and build IP."); *id.* at 1-14 (defining "IP Catalog" as "A hierarchical list of all the supported Arm IP products and versions. You can filter the list by group, name, protocol, or valid associations."); Arm Development Studio Getting Started Guide (Version 2021.2) at 184 ("Arm Development Studio includes support for Common Microcontroller Software Interface Standard (CMSIS) Packs. CMSIS packs offer you a quick and easy way to create, build and debug embedded software applications for Arm Cortex-A5/A7/A9 based processors. CMSIS Packs are a delivery mechanism for software components, device parameters, and board support… CMSIS Packs are developed by various silicon and software vendors, covering thousands of different boards and devices."); Arm Development Studio: Introducing the Pack Manager (video)[5] ("The pack manager allows you to install ready-made packs of software that you can integrate into your own application code….And we can now build our project to give us a resulting executable file."). The selected characteristics are received "*into a memory of a processor programmed by software commands to design a hardware integrated circuit and associated operating software for controlling the integrated circuit to control the electronic device*" – the memory associated with the processor(s) on which the Accused Design Tools are installed and executed when used by Arm during the design of integrated circuits. Arm Socrates Installation Guide (Version 1.7.3) at 13-14 ("3.3 Memory settings"), *id.* at 15-18 ("4. Installing and starting the software"); Arm Development Studio Getting Started Guide (Version 2021.2) at 20 ("For the best experience with Arm Development Studio, your hardware and host platform should meet the minimum requirements….2GB of RAM…Approximately 3GB of hard disk space.").

- Arm has performed and continues to perform the act of "*analyzing by the processor the selection of categorized input and output characteristics of the electronic device*" when Arm uses the Accused Design Tools to define the desired parameters and configure the selected IP and create, instantiate, and validate a Bill of Materials (BOM), a system specification, RTL, an IP microarchitecture, and executable files for the integrated circuit

[5] https://developer.arm.com/Additional%20Resources/Video%20Tutorials/Pack%20Manager%20in%20Development%20Studio.

appropriate for the associated electronic devices. Arm Socrates User Guide (Version 1.5) ("Socrates enables you to browse, configure, (with configuration space validation), and build Arm IP, including Arm Interconnect IP. The generated RTL and IP-XACT can then be integrated into Arm-based systems."); Arm Development Studio Getting Started Guide (Version 2021.2) at 184 ("CMSIS packs offer you a quick and easy way to create, build and debug embedded software applications for Arm Cortex-A5/A7/A9 based processors."); ARM Development Studio: Introducing the Pack Manager (video)[6] ("The pack manager allows you to install ready-made packs of software that you can integrate into your own application code….And we can now build our project to give us a resulting executable file.").

- Arm has performed and continues to perform the act of "*outputting by the processor of a hardware integrated circuit design based on the selection of input and output characteristics of the device*." Arm uses the Accused Design Tools to generate and output RTL, a specification of the integrated circuit design, and the final microarchitecture. Arm Socrates Installation Guide (Version 1.7.3) at 10 ("Create a high-level view of your SoC design, containing configured IP instances and their high- level connections; Choose the most suitable interconnect IP for your design, based on the high-level connectivity requirements of the other IP in your design; Use this high-level view for further refinement and development of your design."); *id.* at 1-14 ("Specification Schematic View…Shows a graphical representation of the specification for an IP entry… Architecture Schematic View… Shows a schematic of the µArchitecture for an IP entry."); Arm Socrates User Guide (Version 1.5) at 3-24 ("Build…Starts the rendering of IP-XACT and Verilog output for the selected IP."); *id.* at 3-25 ("To export a configured IP instance .soc file: 1. In Project Explorer, right-click a configured IP instance, and select Export. 2. Expand Socrates, select Export to Socrates Share (Collaboration), and click Next. 3. Select the configurations you want to export. 4. Browse to a location to save the configurations (as .soc files). 5. Click Finish.").

- Arm has performed and continues to perform the act of "*outputting by the processor software programming commands to be executed by the hardware integrated circuit for controlling the electronic device in accordance with the selection of categorized input and output characteristics of the electronic device*." Arm uses the Accused Design Tools to compile and output software commands for the integrated circuit, which controls the electronic device in accordance with the selected input and output characteristics. Arm Development Studio Getting Started Guide (Version 2021.2) at 184 ("CMSIS packs offer you a quick and easy way to create, build and debug embedded software applications for Arm Cortex-A5/A7/A9 based processors."); Arm Development Studio: Introducing the Pack Manager (video)[7] ("The pack manager allows you to install ready-made packs of software that you can integrate into your own application code….And we can now build our project to give us a resulting executable file.").

---

[6] https://developer.arm.com/Additional%20Resources/Video%20Tutorials/Pack%20Manager%20in%20Development%20Studio.

[7] https://developer.arm.com/Additional%20Resources/Video%20Tutorials/Pack%20Manager%20in%20Development%20Studio.

15. **Claim 8** recites: "A system comprising: one or more processors; logic encoded in one or more non-transitory computer-readable media that, when executed by the one or more processors, is operable to: receive a selection of categorized input and output characteristics of a device; into a memory associated with the one or more processors, the logic executed by the one or more processors operable to design a hardware integrated circuit design based on the selection of input and output characteristics of the device, the hardware integrated circuit design including a communication bus, and output software programming commands to executed by the hardware integrated circuit for controlling the device in accordance with the selection of categorized input and output characteristics of the device using a communication protocol compatible with the device through the communication bus of the hardware integrated circuit." '899 col. 19:13-31. Defendants infringe this claim, according to the following infringement theory, which is provided as an example and is not limiting.

- Arm has and continues to make, use, and put into service "*a system*" that meets all elements of claim 8, as further explained below—the system that comprises the Accused Design Tools and the associated computing device(s) having processor(s) on which those design tools are installed and operated by Arm during the design of integrated circuits (the "Accused System").[8]

- Arm's Accused System includes "*one or more processors*" and "*logic encoded in one or more non-transitory computer-readable media that, when executed by the one or more processors, is operable [to perform the operations specified in the remainder of the claim]*": the processor(s) of the computers on which the Accused Design Tools are installed and operated, and the memory associated with those processors on which the logic of the Accused Design Tools is executed when Arm designs integrated circuits. Arm Socrates Installation Guide (Version 1.7.3) at 13-14 ("3.3 Memory settings"), *id.* at 15-18 ("4. Installing and starting the software"); Arm Development Studio Getting Started Guide (Version 2021.2) at 20 ("For the best experience with Arm Development Studio, your hardware and host platform should meet the minimum requirements….2GB of RAM…Approximately 3GB of hard disk space."); Zach Lasiuk, *Accelerate IP Selection with the New Arm IP Explorer*, Arm Community Blog (May 4, 2022)[9] ("The

[8] This allegation is made to the extent the preamble of claim 8 is found to be limiting.
[9] https://community.arm.com/arm-community-blogs/b/soc-design-and-simulation-blog/posts/introducing-arm-ip-explorer-a-new-platform-that-accelerates-ip-selection (last visited March 10, 2023).

Arm IP Explorer helps you translate your project requirements, from a client or management, into a list of configured IP blocks and a defined system.").

- The logic of Arm's Accused Design Tools, when installed and executed by the processors of the Accused System "*receive[s] a selection of categorized input and output characteristics of a device*." This occurs when Arm uses the Accused Design Tools to select IP from the catalog of Arm and third-party IP and when Arm selects and specifies the configuration options and parameters for the integrated circuit's hardware components and operating software. Arm Socrates User Guide (Version 1.5) at 7 ("Socrates enables you to browse, configure, (with configuration space validation), and build Arm IP, including Arm Interconnect IP. The generated RTL and IP-XACT can then be integrated into Arm-based systems …Socrates provides several types of technical information for each supported Arm IP, and a standardized way to configure and build IP."); *id.* at 1-14 (defining "IP Catalog" as "A hierarchical list of all the supported Arm IP products and versions. You can filter the list by group, name, protocol, or valid associations."); Arm Development Studio Getting Started Guide (Version 2021.2) at 184 ("Arm Development Studio includes support for Common Microcontroller Software Interface Standard (CMSIS) Packs. CMSIS packs offer you a quick and easy way to create, build and debug embedded software applications for Arm Cortex-A5/A7/A9 based processors. CMSIS Packs are a delivery mechanism for software components, device parameters, and board support… CMSIS Packs are developed by various silicon and software vendors, covering thousands of different boards and devices."). The selected characteristics are received "*into a memory associated with the one or more processors*": the memory associated with the processor(s) of the Accused System on which the Accused Design Tools are installed and executed when used by Arm during the design of integrated circuits. Arm Development Studio: Introducing the Pack Manager (video)[10] ("The pack manager allows you to install ready-made packs of software that you can integrate into your own application code….And we can now build our project to give us a resulting executable file."); Arm Socrates Installation Guide (Version 1.7.3) at 13-14 ("3.3 Memory settings"), *id.* at 15-18 ("4. Installing and starting the software"); Arm Development Studio Getting Started Guide (Version 2021.2) at 20 ("For the best experience with Arm Development Studio, your hardware and host platform should meet the minimum requirements….2GB of RAM…Approximately 3GB of hard disk space.").

- Arm's Accused System also includes "*logic executed by the one or more processors operable to design a hardware integrated circuit design based on the selection of input and output characteristics of the device*, *the hardware integrated circuit design including a communication bus*." The logic of the Accused Design Tools allows Arm to define the desired parameters and configure the selected IP and create, instantiate, and validate a Bill of Materials (BOM), a system specification, RTL, an IP microarchitecture (which includes a communication bus), and executable files for the integrated circuit appropriate for the associated electronic devices. Arm Socrates User Guide (Version 1.5) ("Socrates enables you to browse, configure, (with configuration space validation), and build Arm IP, including Arm Interconnect IP. The generated RTL and IP-XACT can then be

[10] https://developer.arm.com/Additional%20Resources/Video%20Tutorials/Pack%20Manager%20in%20Development%20Studio.

integrated into Arm-based systems."); Arm Cortex-A35 Processor Technical Reference Manual (Revision: r1p0) at A1-30 ("The Cortex-A35 processor…is highly configurable, allowing you to select features that are appropriate for the SoC in which it is used. The major configuration options are: • One to four Armv8-A compliant cores with automatic data cache coherency. • One shared L2 cache. • An AXI, ACE, or CHI system bus interface.").

- The logic of Arm's Accused Design Tools, when installed and executed by the processors of the Accused System, "*output[s] software programming commands to executed by the hardware integrated circuit for controlling the device in accordance with the selection of categorized input and output characteristics of the device using a communication protocol compatible with the device through the communication bus of the hardware integrated circuit*." The Accused Design Tools compile and output software commands to control the hardware on the integrated circuit, which controls the electronic device in accordance with the selected input and output characteristics. Arm Development Studio Getting Started Guide (Version 2021.2) at 184 ("CMSIS packs offer you a quick and easy way to create, build and debug embedded software applications for Arm Cortex-A5/A7/A9 based processors."); Arm Development Studio: Introducing the Pack Manager (video)[11] ("The pack manager allows you to install ready-made packs of software that you can integrate into your own application code….And we can now build our project to give us a resulting executable file."); Arm Cortex-A35 Processor Technical Reference Manual (Revision: r1p0) at A1-30 ("The Cortex-A35 processor…is highly configurable, allowing you to select features that are appropriate for the SoC in which it is used. The major configuration options are: • One to four Armv8-A compliant cores with automatic data cache coherency. • One shared L2 cache. • An AXI, ACE, or CHI system bus interface.").

16. ICPillar has been damaged by Defendants' infringement of the '899 patent and is entitled to compensatory damages for Defendants' infringement.

COUNT II
Infringement of the '657 patent

17. ICPillar realleges and incorporates by reference paragraphs 1-9 of this Complaint.

18. On June 14, 2016, the United States Patent and Trademark Office issued U.S. Patent No. 9,367,657 (the '657 patent), entitled "System and Method for Universal Control of Electronic Devices." Ex. 2. Plaintiff ICPillar owns all right, title, and interest in the '657 patent, including the right to enforce the patent against infringers and collect damages for past

[11] https://developer.arm.com/Additional%20Resources/Video%20Tutorials/Pack%20Manager%20in%20Development%20Studio.

infringement.

19. Each claim of the ’657 patent is valid, enforceable, and patent eligible under Section 101 of the Patent Act. The ’657 patent is directed to the technical field of designing the hardware and software for integrated circuits, including SoCs. The ’657 patent discloses and claims systems and methods that address technical problems that are inherent in disjointed design processes and tools used for such design and that required countless engineering hours to design new processes and tools to enable the design of new integrated circuits. The ’657 patent addressed these technical problems with a technical solution, disclosing and claiming a set of tools that enables the design and development of the hardware and software of integrated circuits. Additionally, the claims of the ’899 patent are novel and non-obvious and recite elements and steps that were not routine or conventional at the time of the invention, either individually or in combination.

20. Each of Defendants Arm Ltd. and Arm Inc. has directly infringed the claims of the ’657 patent by making and using the claimed systems and methods in the United States and in this District. Defendants infringe multiple claims of the ’657 patent through their use of the Accused Design Tools, including but not limited to claims 1 and 9.

21. **Claim 1** recites: “A method for designing an integrated circuit which controls a device when the integrated circuit is integrated into the device comprising: selecting a value for a control type parameter associated with an electronic device from a hierarchal classification database; selecting a value for a display type parameter associated with the electronic device from the hierarchal classification database; selecting a value for an input type parameter for the electronic device from the hierarchal classification database; selecting a value for an output type parameter for the electronic device from the hierarchal classification database; receiving the selected values for the control type, display type, input type and output type parameters into a

memory of a processor programmed by software commands to design a hardware integrated circuit and associated operating software for controlling the hardware integrated circuit to control the electronic device; analyzing by the processor the selected values for the control type, display type, input type and output type parameters of the electronic device; outputting by the processor a hardware integrated circuit design based on the selection of input and output characteristics of the electronic device, the hardware integrated circuit including a communication bus for communicating with the electronic device; and outputting by the processor software programming commands to be executed by the hardware integrated circuit for controlling the electronic device in accordance with the selection of categorized input and output characteristics of the electronic device through the communication bus of the hardware integrated circuit using a communication protocol compatible with the electronic device and the hardware integrated circuit." '657 col. 18:49-19:17. Defendants infringe this claim, according to the following infringement theory, which is provided as an example and is not limiting. In developing, testing, and using the Accused Design Tools:

- Arm has performed and continues to perform "*a method for designing an integrated circuit which controls a device when the integrated circuit is integrated into the device*."[12] Arm Socrates User Guide (Version 1.5) at 1-11 ("Socrates IP Tooling platform is an environment for exploring, configuring, and building Arm IP ready for integration into a *System on Chip* (SoC)." (italics in original); *id.* at 4-33 (showing "Cortex-A35 sample configure and build script"). Examples of controlled devices include computers, smartphones, wearables, and IoT nodes (and/or their subsystems, chips, or boards). Furthermore, that method includes the performance of the remaining elements of the claim, as set forth below. Zach Lasiuk, *Accelerate IP Selection with the New Arm IP Explorer*, Arm Community Blog (May 4, 2022)[13] ("The Arm IP Explorer helps you translate your project requirements, from a client or management, into a list of configured IP blocks and a defined system.")).

- Arm has performed and continues to perform the acts of "*selecting a value for a control*

[12] This allegation is made to the extent the preamble of claim 1 is found to be limiting.
[13] https://community.arm.com/arm-community-blogs/b/soc-design-and-simulation-blog/posts/introducing-arm-ip-explorer-a-new-platform-that-accelerates-ip-selection (last visited March 10, 2023).

type parameter associated with an electronic device from a hierarchal classification database; selecting a value for a display type parameter associated with the electronic device from the hierarchal classification database; selecting a value for an input type parameter for the electronic device from the hierarchal classification database; selecting a value for an output type parameter for the electronic device from the hierarchal classification database" when Arm uses the Accused Design Tools (which provide user interface views that reflect the hierarchical database being accessed) to select IP from the catalog of Arm and third-party IP and when Arm selects and specifies the configuration options and parameters for the integrated circuit's hardware components and operating software, including a control type parameter (e.g., system control signals), a display parameter (e.g., multimedia or graphics aspects), input type parameter (e.g., memory and other system inputs), and an output type parameter (e.g., system outputs) for an integrated circuit design. Arm Socrates User Guide (Version 1.5) at 7 ("Socrates enables you to browse, configure, (with configuration space validation), and build Arm IP, including Arm Interconnect IP. The generated RTL and IP-XACT can then be integrated into Arm-based systems …Socrates provides several types of technical information for each supported Arm IP, and a standardized way to configure and build IP."); *id.* at 1-14 (defining "IP Catalog" as "A hierarchical list of all the supported Arm IP products and versions. You can filter the list by group, name, protocol, or valid associations."); Arm, *Arm Socrates: 7) IP Catalog - IP configuration wizard | Arm*, YouTube (May 28, 2020) (video)[14] ("After specifying the project name and clicking finish, the tool will launch the configuration wizard for the selected IP where you can set all the necessary IP parameters via their drop down menu."); Arm Development Studio Getting Started Guide (Version 2021.2) at 184 ("Arm Development Studio includes support for Common Microcontroller Software Interface Standard (CMSIS) Packs. CMSIS packs offer you a quick and easy way to create, build and debug embedded software applications for Arm Cortex-A5/A7/A9 based processors. CMSIS Packs are a delivery mechanism for software components, device parameters, and board support… CMSIS Packs are developed by various silicon and software vendors, covering thousands of different boards and devices."); *id.* at 188 ("The Hardware Connection wizard allows you to select target information which comes from either a CMSIS pack or a configuration database."); *id.* at 217 ("The Model Configuration Editor opens and loads the imported model file. You can view the configuration database and model in the Project Explorer."); Arm Development Studio: Introducing the Pack Manager (video)[15] ("The pack manager allows you to install ready-made packs of software that you can integrate into your own application code….And we can now build our project to give us a resulting executable file.").

- Arm has performed and continues to perform the act of "*receiving the selected values for the control type, display type, input type and output type parameters*" when Arm uses the Accused Design Tools to select IP from the catalog of Arm and third-party IP and when Arm selects and specifies the configuration options and parameters for the integrated circuit's hardware components and operating software. Arm Socrates User Guide

[14] https://www.youtube.com/watch?v=WJV3deRAQYE&list=PLgyFKd2HIZlY_y7b5OTtyrso45q-eCM_s&index=7.

[15] https://developer.arm.com/Additional%20Resources/Video%20Tutorials/Pack%20Manager%20in%20Development%20Studio.

(Version 1.5) at 7 ("Socrates enables you to browse, configure, (with configuration space validation), and build Arm IP, including Arm Interconnect IP. The generated RTL and IP-XACT can then be integrated into Arm-based systems …Socrates provides several types of technical information for each supported Arm IP, and a standardized way to configure and build IP."); *id.* at 1-14 (defining "IP Catalog" as "A hierarchical list of all the supported Arm IP products and versions. You can filter the list by group, name, protocol, or valid associations."); Arm Development Studio Getting Started Guide (Version 2021.2) at 184 ("Arm Development Studio includes support for Common Microcontroller Software Interface Standard (CMSIS) Packs. CMSIS packs offer you a quick and easy way to create, build and debug embedded software applications for Arm Cortex-A5/A7/A9 based processors. CMSIS Packs are a delivery mechanism for software components, device parameters, and board support… CMSIS Packs are developed by various silicon and software vendors, covering thousands of different boards and devices."); ARM Development Studio: Introducing the Pack Manager (video)[16] ("The pack manager allows you to install ready-made packs of software that you can integrate into your own application code….And we can now build our project to give us a resulting executable file."). The selected parameters are received "*into a memory of a processor programmed by software commands to design a hardware integrated circuit and associated operating software for controlling the hardware integrated circuit to control the electronic device*"—the memory associated with processor(s) on which the Accused Design Tools are installed and executed when used by Arm during the design of integrated circuits. Arm Socrates Installation Guide (Version 1.7.3) at 13-14 ("3.3 Memory settings"), *id.* at 15-18 ("4. Installing and starting the software"); Arm Development Studio Getting Started Guide (Version 2021.2) at 20 ("For the best experience with Arm Development Studio, your hardware and host platform should meet the minimum requirements….2GB of RAM…Approximately 3GB of hard disk space.").

- Arm has performed and continues to perform the act of "*analyzing by the processor the selected values for the control type, display type, input type and output type parameters of the electronic device*" when Arm uses the Accused Design Tools to define the desired parameters and configure the selected IP and create, instantiate, and validate a Bill of Materials (BOM), a system specification, RTL, an IP microarchitecture, and executable files for the integrated circuit appropriate for the associated electronic devices. Arm Socrates User Guide (Version 1.5) ("Socrates enables you to browse, configure, (with configuration space validation), and build Arm IP, including Arm Interconnect IP. The generated RTL and IP-XACT can then be integrated into Arm-based systems."); Arm Development Studio Getting Started Guide (Version 2021.2) at 184 ("CMSIS packs offer you a quick and easy way to create, build and debug embedded software applications for Arm Cortex-A5/A7/A9 based processors."); ARM Development Studio: Introducing the Pack Manager (video)[17] ("The pack manager allows you to install ready-made packs of software that you can integrate into your own application code….And we can now build our project to give us a resulting executable file.").

[16] https://developer.arm.com/Additional%20Resources/Video%20Tutorials/Pack%20Manager%20in%20Development%20Studio.
[17] https://developer.arm.com/Additional%20Resources/Video%20Tutorials/Pack%20Manager%20in%20Development%20Studio.

- Arm has performed and continues to perform the act of "*outputting by the processor a hardware integrated circuit design based on the selection of input and output characteristics of the electronic device, the hardware integrated circuit including a communication bus for communicating with the electronic device*." Arm uses the Accused Design Tools to generate and output RTL, a specification of the integrated circuit design, and the final microarchitecture (which includes a communication bus). Arm Socrates Installation Guide (Version 1.7.3) at 10 ("Create a high-level view of your SoC design, containing configured IP instances and their high- level connections; Choose the most suitable interconnect IP for your design, based on the high-level connectivity requirements of the other IP in your design; Use this high-level view for further refinement and development of your design."); *id.* at 1-14 ("Specification Schematic View…Shows a graphical representation of the specification for an IP entry… Architecture Schematic View… Shows a schematic of the µArchitecture for an IP entry."); Arm Socrates User Guide (Version 1.5) at 3-24 ("Build…Starts the rendering of IP-XACT and Verilog output for the selected IP."); *id.* at 3-25 ("To export a configured IP instance .soc file: 1. In Project Explorer, right-click a configured IP instance, and select Export. 2. Expand Socrates, select Export to Socrates Share (Collaboration), and click Next. 3. Select the configurations you want to export. 4. Browse to a location to save the configurations (as .soc files). 5. Click Finish."); Arm Cortex-A35 Processor Technical Reference Manual (Revision: r1p0) at A1-30 ("The Cortex-A35 processor…is highly configurable, allowing you to select features that are appropriate for the SoC in which it is used. The major configuration options are: • One to four Armv8-A compliant cores with automatic data cache coherency. • One shared L2 cache. • An AXI, ACE, or CHI system bus interface.").

- Arm has performed and continues to perform the act of "*outputting by the processor software programming commands to be executed by the hardware integrated circuit for controlling the electronic device in accordance with the selection of categorized input and output characteristics of the electronic device through the communication bus of the hardware integrated circuit using a communication protocol compatible with the electronic device and the hardware integrated circuit*." Arm uses the Accused Design Tools to compile and output software commands for the integrated circuit, which controls the electronic device in accordance with the selected input and output characteristics. Arm Development Studio Getting Started Guide (Version 2021.2) at 184 ("CMSIS packs offer you a quick and easy way to create, build and debug embedded software applications for Arm Cortex-A5/A7/A9 based processors."); Arm Development Studio: Introducing the Pack Manager (video)[18] ("The pack manager allows you to install ready-made packs of software that you can integrate into your own application code….And we can now build our project to give us a resulting executable file."); Arm Cortex-A35 Processor Technical Reference Manual (Revision: r1p0) at A1-30 ("The Cortex-A35 processor…is highly configurable, allowing you to select features that are appropriate for the SoC in which it is used. The major configuration options are: • One to four Armv8-A compliant cores with automatic data cache coherency. • One shared L2 cache. • An AXI, ACE, or CHI system bus interface.").

[18] https://developer.arm.com/Additional%20Resources/Video%20Tutorials/Pack%20Manager%20in%20Development%20Studio.

22. **Claim 9** recites: "A system comprising: one or more processors; a design user interface provided by programming commands executed by the one or more processors, the design user interface allowing a user to characterize an electronic device by selecting a value for a control type parameter, a value for a display type parameter, a value for an input type parameter and a value for an output type parameter, all of which are associated with the operation and control of the electronic device; logic encoded in one or more non-transitory computer-readable media that, when executed by the one or more processors, is operable to: receive the selected control type, display type, input type and output type parameter values selected by the user into a memory associated with the one or more processors, the logic executed by the one or more processors operable to design a hardware integrated circuit design based on the selected control type, display type, input type and output type parameter values selected by the user, the hardware integrated circuit design including a communication bus; and output software programming commands to be executed by the hardware integrated circuit for controlling the device in accordance with the selected control type, display type, input type and output type parameter values selected by the user using a communication protocol compatible with the device and the hardware integrated circuit through the communication bus of the hardware integrated circuit." '657 col. 19:47-20:19. Defendants infringe this claim, according to the following infringement theory, which is provided as an example and is not limiting.

- Arm has and continues to make, use, and put into service "*a system*" that meets all elements of claim 9, as further explained below—the system that comprises the Accused Design Tools and the associated computing device(s) and processor(s) on which those design tools are installed and operated by Arm during the design of integrated circuits (the "Accused System).[19]

- Arm's Accused System includes "*one or more processors*"—the processor(s) of the computers on which the Accused Design Tools are installed and operated. Arm Socrates Installation Guide (Version 1.7.3); Arm Development Studio Getting Started Guide

[19] This allegation is made to the extent the preamble of claim 9 is found to be limiting.

(Version 2021.2) at 20 ("To install and use Arm Development Studio, your workstation must have at least: A dual core x86 2GHz processor (or equivalent).").

- Arm's Accused System includes "*a design user interface provided by programming commands executed by the one or more processors, the design user interface allowing a user to characterize an electronic device by selecting a value for a control type parameter, a value for a display type parameter, a value for an input type parameter and a value for an output type parameter, all of which are associated with the operation and control of the electronic device*." The Accused Design Tools provide user interface views that allow Arm to select IP from the catalog of Arm and third-party IP and to select and specify the configuration options and parameters for the integrated circuit's hardware components and operating software, including a control type parameter (e.g., system control signals), a display parameter (e.g., multimedia or graphics aspects), input type parameter (e.g., memory and other system inputs), and an output type parameter (e.g., system outputs) for an integrated circuit design. Arm Socrates User Guide (Version 1.5) at 7 ("Socrates enables you to browse, configure, (with configuration space validation), and build Arm IP, including Arm Interconnect IP. The generated RTL and IP-XACT can then be integrated into Arm-based systems …Socrates provides several types of technical information for each supported Arm IP, and a standardized way to configure and build IP."); *id.* at 1-13 ("Socrates has a number of panels, known as views, arranged into two perspectives."); *id.* at 1-14 (defining "IP Catalog" as "A hierarchical list of all the supported Arm IP products and versions. You can filter the list by group, name, protocol, or valid associations."); Arm, *Arm Socrates: 7) IP Catalog – IP configuration wizard | Arm*, YouTube (May 28, 2020) (video)[20] ("After specifying the project name and clicking finish, the tool will launch the configuration wizard for the selected IP where you can set all the necessary IP parameters via their drop down menu"); Arm, *Arm Socrates: 3) Getting Started – GUI perspectives | Arm*, YouTube (May 28, 2020) (video)[21]; Arm Development Studio Getting Started Guide (Version 2021.2) at 184 ("Arm Development Studio includes support for Common Microcontroller Software Interface Standard (CMSIS) Packs. CMSIS packs offer you a quick and easy way to create, build and debug embedded software applications for Arm Cortex-A5/A7/A9 based processors. CMSIS Packs are a delivery mechanism for software components, device parameters, and board support… CMSIS Packs are developed by various silicon and software vendors, covering thousands of different boards and devices."); *id.* at 188 ("The Hardware Connection wizard allows you to select target information which comes from either a CMSIS pack or a configuration database."); *id.* at 217 ("The Model Configuration Editor opens and loads the imported model file. You can view the configuration database and model in the Project Explorer."); ARM Development Studio: Introducing the Pack Manager (video)[22] ("The pack manager allows you to install ready-made packs of software that you can integrate into your own application code…And we can now build our project to give us a resulting executable file.").

---

[20] https://www.youtube.com/watch?v=WJV3deRAQYE&list=PLgyFKd2HIZlY_y7b5OTtyrso45q-eCM_s&index=7.

[21] https://www.youtube.com/watch?v=-Nnq8KkOOJE.

[22] https://developer.arm.com/Additional%20Resources/Video%20Tutorials/Pack%20Manager%20in%20Development%20Studio.

- Arm's Accused System includes "*logic encoded in one or more non-transitory computer-readable media that, when executed by the one or more processors, is operable to [perform the operations specified in the remainder of the claim]*": the memory associated with the processor(s) of the computers on which the Accused Design Tools are installed and operated is encoded with the logic of the Accused Design Tools. Arm Socrates Installation Guide (Version 1.7.3) at 13-14 ("3.3 Memory settings"), *id.* at 15-18 ("4. Installing and starting the software"); Arm Development Studio Getting Started Guide (Version 2021.2) at 20 ("For the best experience with Arm Development Studio, your hardware and host platform should meet the minimum requirements….2GB of RAM…Approximately 3GB of hard disk space.").

- The logic of Arm's Accused Design Tools, when installed and executed on the processors of the Accused System "*receive[s] the selected control type, display type, input type and output type parameter values selected by the user into a memory associated with the one or more processors, the logic executed by the one or more processors operable to design a hardware integrated circuit design based on the selected control type, display type, input type and output type parameter values selected by the user, the hardware integrated circuit design including a communication bus*" when Arm uses the Accused Design Tools to select IP from the catalog of Arm and third-party IP and when Arm selects and specifies the configuration options and parameters for the integrated circuit's hardware components (including a communication bus) and operating software. Arm Socrates User Guide (Version 1.5) at 7 ("Socrates enables you to browse, configure, (with configuration space validation), and build Arm IP, including Arm Interconnect IP. The generated RTL and IP-XACT can then be integrated into Arm-based systems …Socrates provides several types of technical information for each supported Arm IP, and a standardized way to configure and build IP."); *id.* at 1-14 (defining "IP Catalog" as "A hierarchical list of all the supported Arm IP products and versions. You can filter the list by group, name, protocol, or valid associations."); Arm Development Studio Getting Started Guide (Version 2021.2) at 184 ("Arm Development Studio includes support for Common Microcontroller Software Interface Standard (CMSIS) Packs. CMSIS packs offer you a quick and easy way to create, build and debug embedded software applications for Arm Cortex-A5/A7/A9 based processors. CMSIS Packs are a delivery mechanism for software components, device parameters, and board support… CMSIS Packs are developed by various silicon and software vendors, covering thousands of different boards and devices."); Arm Development Studio: Introducing the Pack Manager (video)[23] ("The pack manager allows you to install ready-made packs of software that you can integrate into your own application code….And we can now build our project to give us a resulting executable file."); Arm Cortex-A35 Processor Technical Reference Manual (Revision: r1p0) at A1-30 ("The Cortex-A35 processor…is highly configurable, allowing you to select features that are appropriate for the SoC in which it is used. The major configuration options are: • One to four Armv8-A compliant cores with automatic data cache coherency. • One shared L2 cache. • An AXI, ACE, or CHI system bus interface.").

[23] https://developer.arm.com/Additional%20Resources/Video%20Tutorials/Pack%20Manager%20in%20Development%20Studio.

- The logic of Arm's Accused Design Tools, when installed and executed by the processors of the Accused System "*output[s] software programming commands to be executed by the hardware integrated circuit for controlling the device in accordance with the selected control type, display type, input type and output type parameter values selected by the user using a communication protocol compatible with the device and the hardware integrated circuit through the communication bus of the hardware integrated circuit*." The Accused Design Tools compile and output software commands to control the hardware on the integrated circuit, which controls the electronic device in accordance with the selected input and output characteristics. Arm Development Studio Getting Started Guide (Version 2021.2) at 184 ("CMSIS packs offer you a quick and easy way to create, build and debug embedded software applications for Arm Cortex-A5/A7/A9 based processors."); Arm Development Studio: Introducing the Pack Manager (video)[24] ("The pack manager allows you to install ready-made packs of software that you can integrate into your own application code….And we can now build our project to give us a resulting executable file."); Arm Cortex-A35 Processor Technical Reference Manual (Revision: r1p0) at A1-30 ("The Cortex-A35 processor…is highly configurable, allowing you to select features that are appropriate for the SoC in which it is used. The major configuration options are: • One to four Armv8-A compliant cores with automatic data cache coherency. • One shared L2 cache. • An AXI, ACE, or CHI system bus interface.").

23. ICPillar has been damaged by Defendants' infringement of the '657 patent and is entitled to compensatory damages for Defendants' infringement.

PRAYER FOR RELIEF

ICPillar prays for entry of judgment against Defendants as follows:

A. That Defendants have infringed each of the Asserted Patents;

B. That Defendants owe and must pay ICPillar damages adequate to compensate ICPillar for Defendants' infringement, along with an award of pre- and post-judgment interests and costs;

C. That Defendants be ordered to pay supplement damages for any infringement that occurs after the jury's award of damages, along with interest; and

D. That ICPillar be awarded all such additional relief, including equitable relief, as the Court deems just and proper.

[24] https://developer.arm.com/Additional%20Resources/Video%20Tutorials/Pack%20Manager%20in%20Development%20Studio.

DEMAND FOR JURY TRIAL

ICPillar demands a trial by jury on all issues triable to a jury.

Date: March 14, 2023

Respectfully submitted,

/s/ Mark D. Siegmund

Mark D. Siegmund
Texas Bar No. 24117055
msiegmund@cjsjlaw.com
Gregory P. Love
Texas Bar No. 24013060
glove@cjsjlaw.com
CHERRY JOHNSON SIEGMUND JAMES PLLC
The Roosevelt Tower
400 Austin Avenue, 9th Floor
Waco, Texas 767101
Telephone: (254) 732-2242
Facsimile: (866) 627-3509

Jaime W. Marquart (Cal. Bar No. 200344)
(*pro hac vice* application forthcoming)
jmarquart@waymakerlaw.com
Ryan G. Baker (Cal. Bar No. 214036)
(*pro hac vice* application forthcoming)
rbaker@waymakerlaw.com
Donald R. Pepperman (Cal. Bar No. 109809)
(*pro hac vice* application forthcoming)
dpepperman@waymakerlaw.com
May Y. Chan (Cal. Bar No. 230534)
(*pro hac vice* application forthcoming)
mchan@waymakerlaw.com
Kevin M. Casey (Cal. Bar No. 338924)
(*pro hac vice* application forthcoming)
kcasey@waymakerlaw.com
WAYMAKER LLP
515 S. Flower Street, Suite 3500
Los Angeles, California 90071
Telephone: (424) 652-7800

John Jeffrey Eichmann (Cal. Bar No. 227472)
(admitted in the Western District)
EICHMANN, a professional corporation
662 N. Sepulveda Blvd., Suite 300
Los Angeles, California 90049
310-237-9190 (tel.)
jeichmann@eichmann.com

Attorneys for Plaintiff ICPillar LLC