US006155268A

United States Patent [19]

Takeuchi

[11] **Patent Number: 6,155,268**

[45] **Date of Patent: Dec. 5, 2000**

[54] **FLAVOR-GENERATING DEVICE**

[75] Inventor: **Manabu Takeuchi**, Tokyo, Japan

[73] Assignee: **Japan Tobacco Inc.**, Tokyo, Japan

[21] Appl. No.: **09/120,457**

[22] Filed: **Jul. 23, 1998**

[30] **Foreign Application Priority Data**

Jul. 23, 1997 [JP] Japan 9-197033

[51] **Int. Cl.**[7] **A24F 47/00**

[52] **U.S. Cl.** **131/273**; 131/194

[58] **Field of Search** 131/335, 271, 131/273, 194, 336, 272

[56] **References Cited**

U.S. PATENT DOCUMENTS

4,288,396	9/1981	Ottestad .	
4,303,083	12/1981	Burruss, Jr. .	
4,805,614	2/1989	Lerner .	
4,945,931	8/1990	Gori .	
5,060,671	10/1991	Counts et al. .	
5,144,962	9/1992	Counts et al. .	
5,269,327	12/1993	Counts et al. .	
5,666,977	9/1997	Higgins et al.	131/194
5,743,251	4/1998	Howell et al. .	

FOREIGN PATENT DOCUMENTS

0295122A2	12/1988	European Pat. Off. .
0358114A2	3/1990	European Pat. Off. .
WO 95/01137A1	1/1995	WIPO .

Primary Examiner—James Derrington
Assistant Examiner—Rob McBride
Attorney, Agent, or Firm—Birch, Stewart, Kolasch & Birch, LLP

[57] **ABSTRACT**

A flavor-generating device includes a chamber having an air inlet port and a flavor inhalation port, and defining a gas passageway between the air inlet port and the inhalation port. A liquid container for storing a liquid flavor source is provided, and is maintained at substantially an atmospheric pressure. At least one liquid passageway is provided in fluid communication with the liquid flavor source at its first end portion and with the gas passageway at its second end portion. The liquid passageway transports the liquid flavor source therethrough by capillary force. A heater heats and evaporates the liquid flavor source at the second end portion of the liquid passageway.

18 Claims, 8 Drawing Sheets

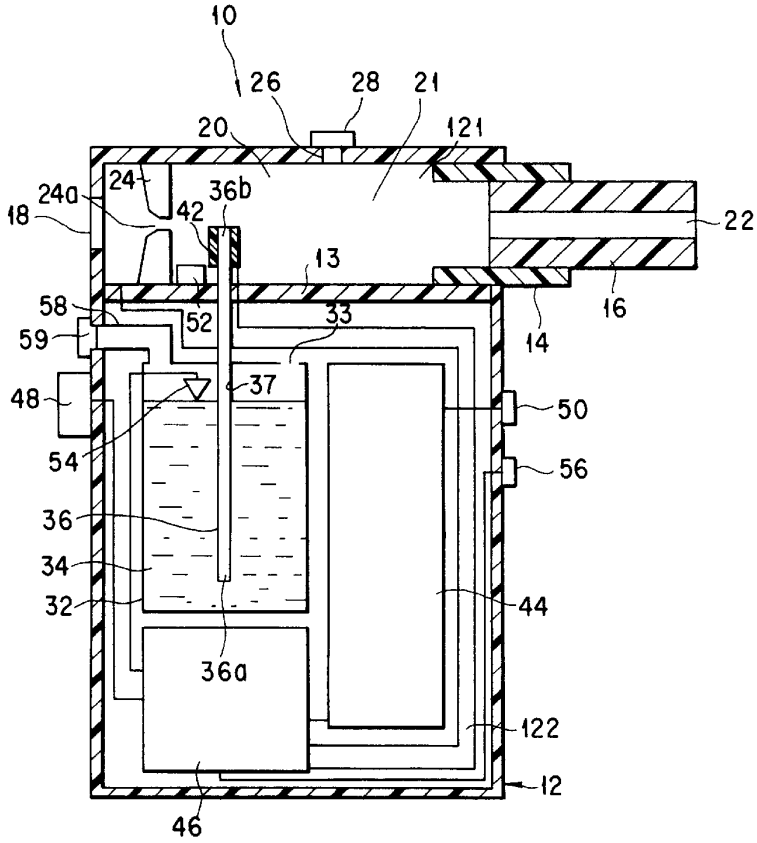

NJOY Exhibit 1009.001

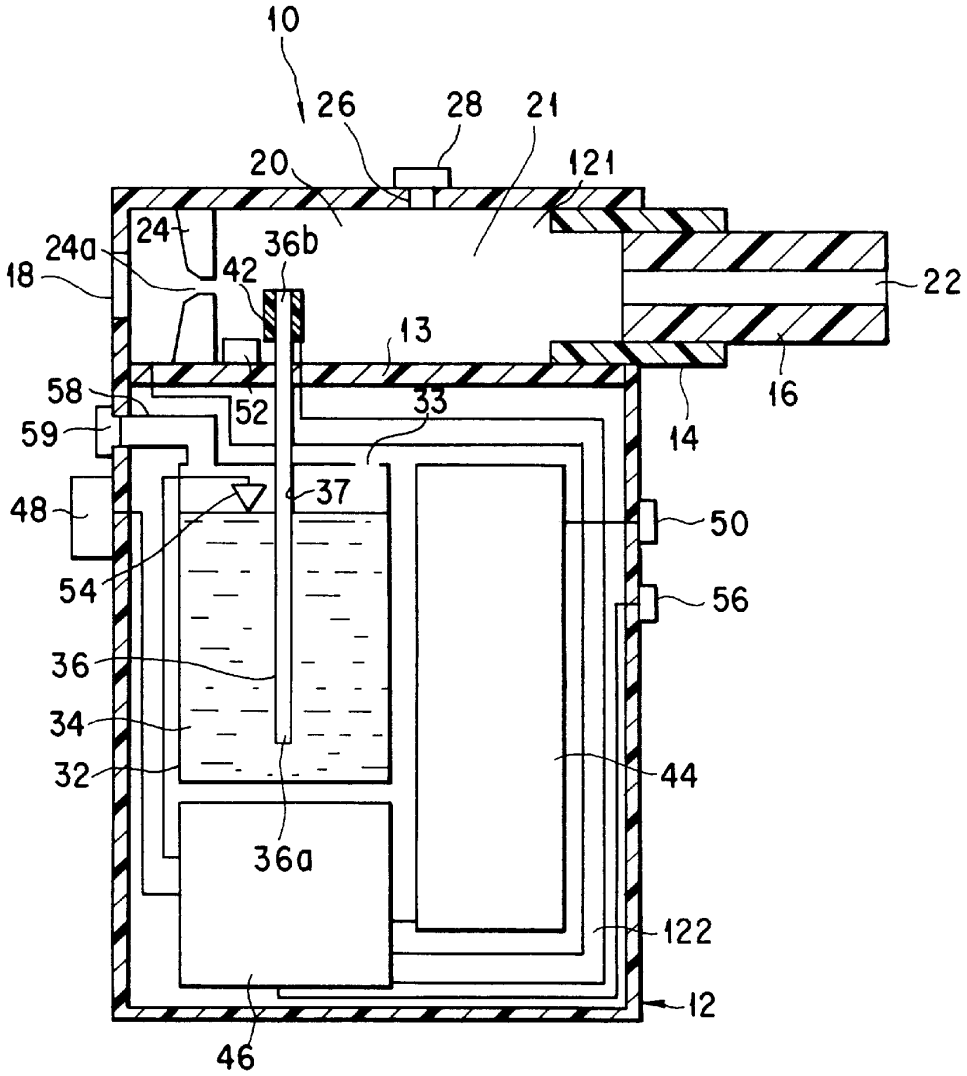
10
26
28
21
20
121
24
24a
36b
18
42
22
13
58
52
33
16
59
14
48
37
50
54
56
36
34
32
44
36a
122
12
46

FIG. 1

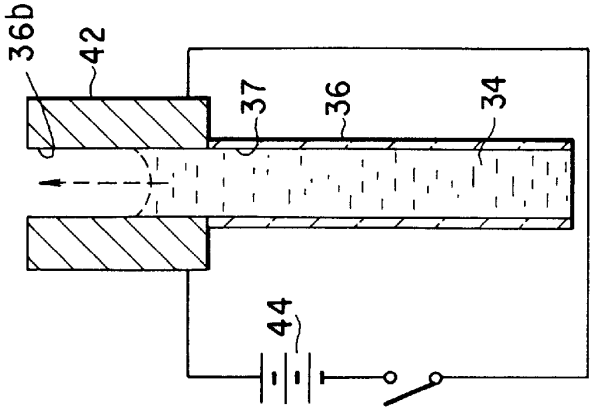

FIG. 2C

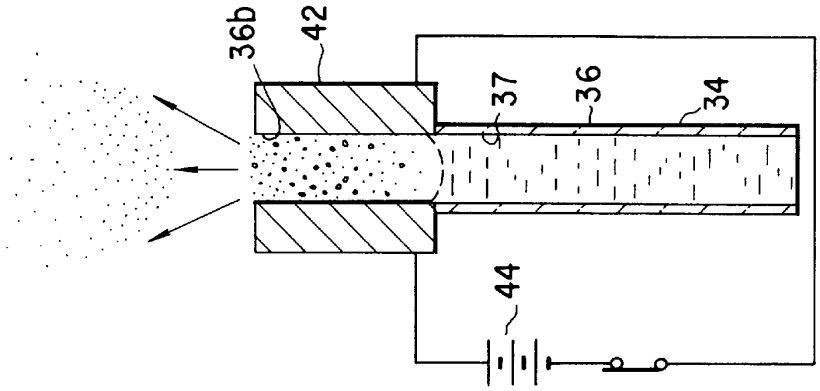

FIG. 2B

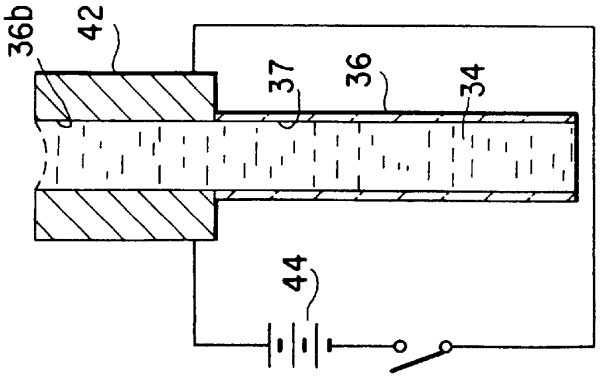

FIG. 2A

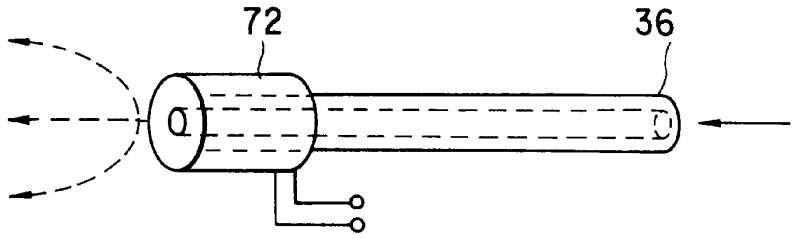

FIG. 3

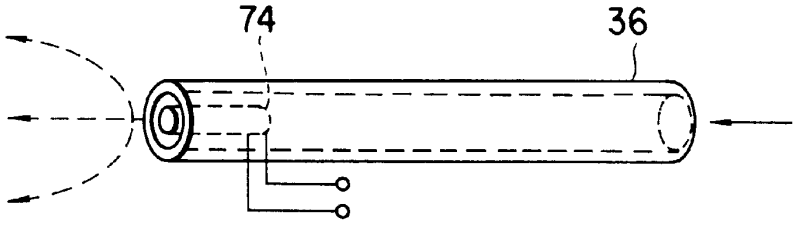

FIG. 4

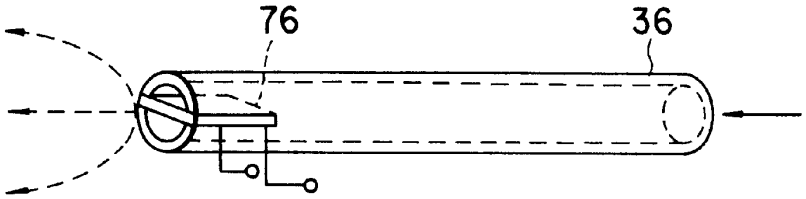

FIG. 5

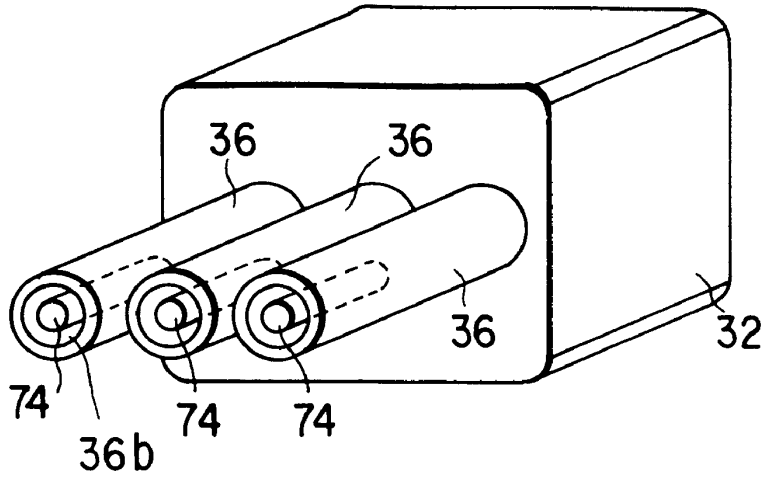

FIG. 6

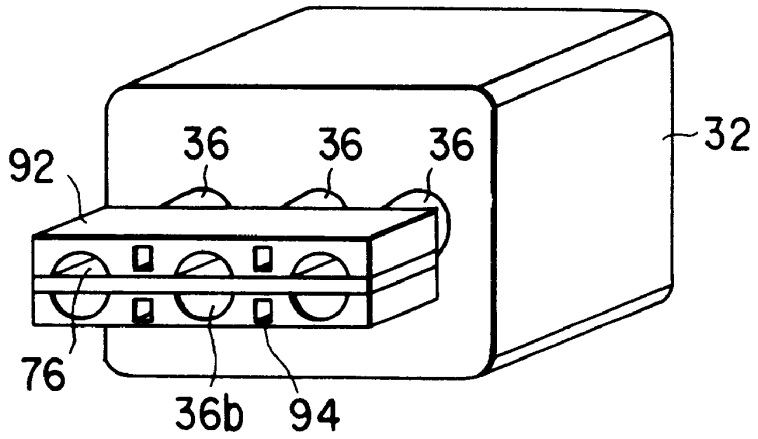

FIG. 7

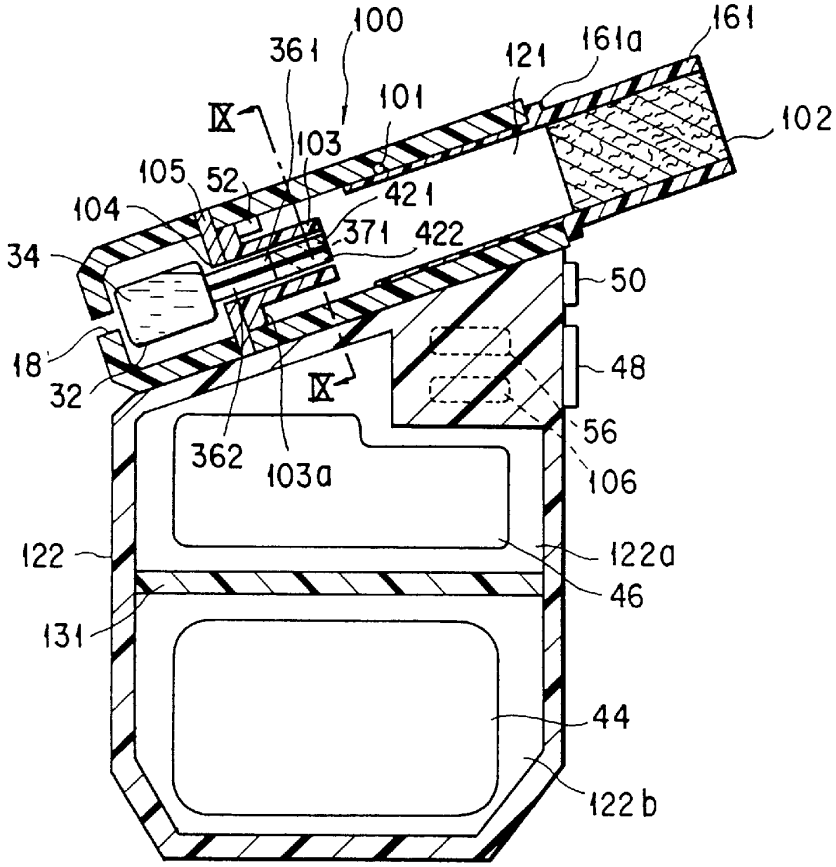
100
361
121
161a
161
101
102
IX
103
105
52
421
104
371
422
34
50
18
48
32
IX
56
362
103a
106
122
122a
46
131
44
122b

FIG. 8

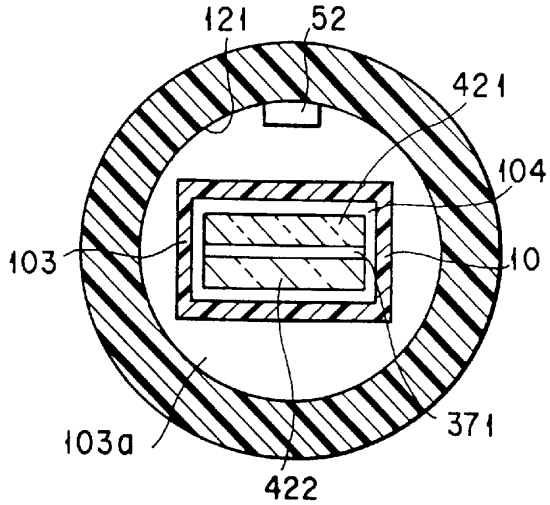
121
52
421
104
103
10
371
103a
422

FIG. 9

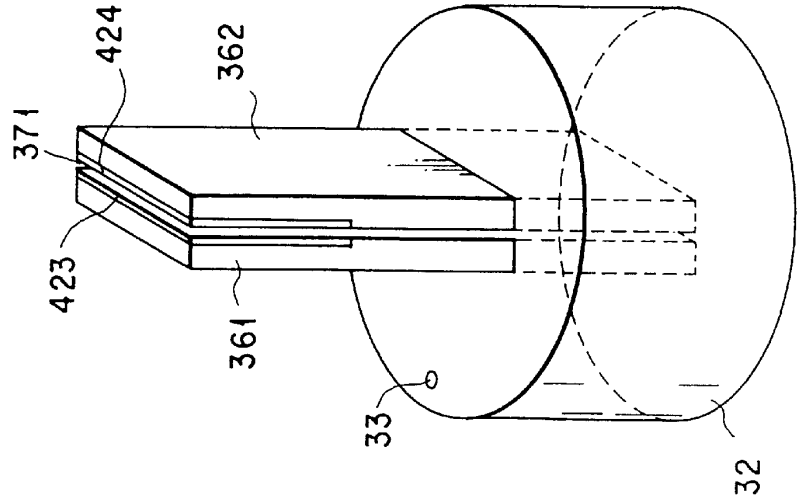

FIG. 11

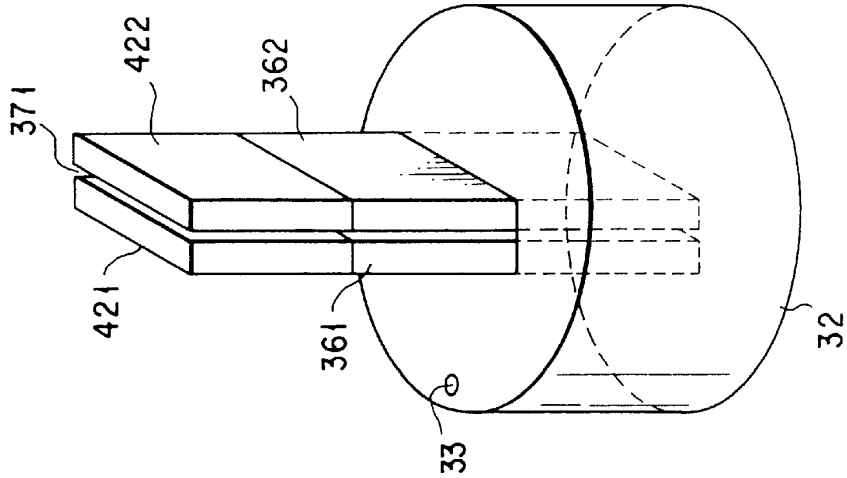

FIG. 10

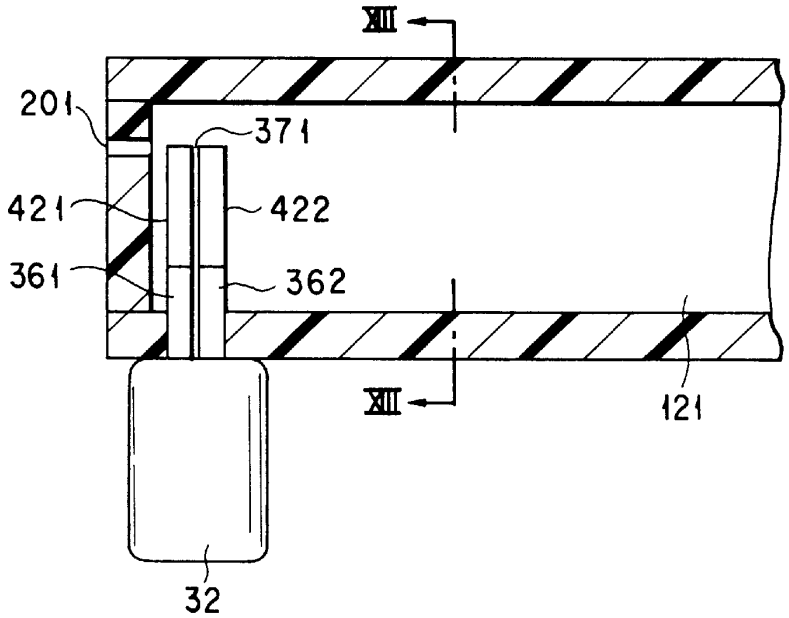
XII
201
371
421
422
361
362
XII
121
32

FIG. 12

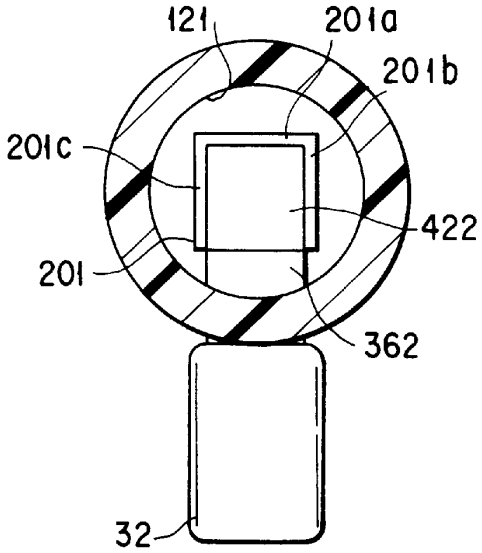
121
201a
201b
201c
422
201
362
32

FIG. 13

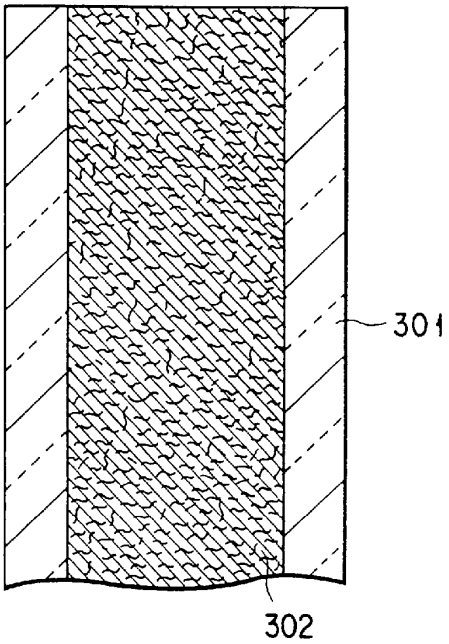

FIG. 14

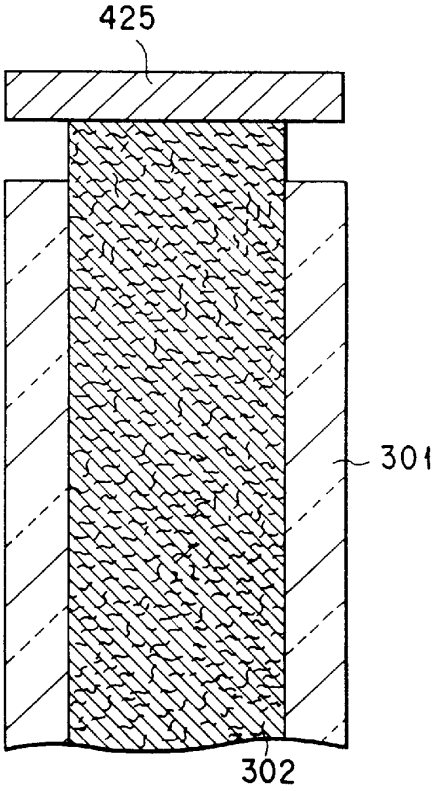

FIG. 15

FLAVOR-GENERATING DEVICE

BACKGROUND OF THE INVENTION

The present invention relates to a flavor-generating device for enjoying inhalation of flavor or for enjoying simulated smoking, and more particularly, to a flavor-generating device for generating flavor which is to be inhaled by a user by heating a liquid. flavor source without relying on combustion.

Various types of flavor-generating devices in which a flavor material is evaporated by heating for enjoying inhalation of flavor have been proposed to date.

For example, Japanese Patent Disclosure (Kokai) No. 3-232481 discloses a typical concept of a conventional simulated smoking article. In this flavor-generating device, a rod-like solid flavor material is used, and the flavor or inhalation target is generated by heating the solid flavor material with a heating element. In a flavor-generating device of this type, a large amount of solid flavor material is wasted where the flavor material is kept continuously heated. Disadvantageously, where the solid flavor generation material is heated when a user wishes to inhale the flavor generated from the flavor material, a large time lag is generated between the actual inhalation of the flavor by the user and the generation of the flavor.

A flavor-generating device capable of coping with the above-noted difficulty is disclosed in, for example, Japanese Patent Disclosure No. 3-277265. The disclosed device has a solid flavor material divided into a number of portions, wherein the divided portions of the solid flavor material are heated one by one every time a user takes one puff of the flavor so as to generate the flavor which is to be inhaled by the user. In this flavor-generating device, the solid flavor material and the heating element collectively constitute an integral flavor-generating means. It follows that, after consumption of the flavor material, it is necessary to replace or discard the heating element together with the flavor material. This may be expensive and give rise to an environment problem.

U.S. Pat. No. 4,945,931 discloses a simulated smoking article using a pressurized aerosol container. In this device, vanes are rocked in response to the inhaling action of a user so as to mechanically open the outlet port of the aerosol container and, thus, to release the aerosol. This prior art also discloses a modification in which a heating element for warming the aerosol cooled by the heat of evaporation is mounted at the outlet port of the aerosol container. In each of these devices, however, a pressurized aerosol is confined in the container by a valve which is opened or closed in response to the inhaling action of the user. It follows that a large amount of the aerosol may be leaked to the outside once the valve is opened. In other words, in each of these prior art articles, it is impossible to release continuously a predetermined suitable amount of the aerosol every time a user takes a single puff. Rather, all the pressurized aerosol tends to be released in two or three inhaling actions of the user.

BRIEF SUMMARY OF THE INVENTION

Accordingly, it is an object of the present invention to provide a flavor-generating device which can be driven with a low energy, which effectively prevents a flavor source from being wasted, and which permits generating flavor when a user takes a puff of the flavor, substantially without a time lag.

Another object of the invention is to provide a flavor-generating device which can be made small in size and light in weight.

According to the present invention, there is provided a flavor-generating device comprising a chamber having an air inlet port for introducing the air thereinto and an inhalation port through which a user inhales a flavor, and defining a gas passageway between the air inlet port and the inhalation port; a liquid container for storing a liquid containing a flavor substance, and maintained at substantially an atmospheric pressure; at least one liquid passageway having a first end portion which is in a fluid communication with the liquid and a second end portion which is in a fluid communication with the gas passageway, for transporting the liquid from the liquid container to the second end portion by capillary force; and a heater mounted at the second end portion of the liquid passageway, for heating and gasifying or evaporating the liquid transported from the liquid container.

In the flavor-generating device of the present invention, a liquid containing a flavor substance, i.e., a liquid flavor source, is transported from within a liquid container through the liquid passageway by a capillary force exerted by the liquid passageway. Thus, if the preceding liquid flavor source is gasified or evaporated at the outlet end portion of the liquid passageway, the succeeding liquid flavor source is supplied to the outlet end portion of the liquid passageway by the capillary force. It follows that the flavor-generating device of the present invention can be driven as a whole at a low energy. As a result, it is possible to suppress waste of the flavor source. In addition, the flavor can be generated when the user takes a puff of the flavor. It should be noted in particular that the heater can be controlled on the basis of a signal from a sensor for detecting the inhaling action of the user, with the result that the flavor can be supplied to the user with a high stability.

Additional objects and advantages of the invention will be set forth in the description which follows, and in part will be obvious from the description, or may be learned by practice of the invention. The objects and advantages of the invention may be realized and obtained by means of the instrumentalities and combinations particularly pointed out hereinafter.

BRIEF DESCRIPTION OF THE SEVERAL VIEWS OF THE DRAWING

The accompanying drawings, which are incorporated in and constitute a part of the specification, illustrate presently preferred embodiments of the invention, and together with the general description given above and the detailed description of the preferred embodiments given below, serve to explain the principles of the invention.

FIG. **1** is a sectional view of a flavor-generating device according to one embodiment of the present invention;

FIGS. **2**A to **2**C illustrate the operation of the flavor-generating device shown in FIG. **1**;

FIG. **3** is a perspective view showing a modification of the mechanism for supplying and gasifying a liquid flavor source according to the invention;

FIG. **4** is a perspective view showing another modification of the mechanism for supplying and gasifying a liquid flavor source;

FIG. **5** is a perspective view showing still another modification of the mechanism for supplying and gasifying a liquid flavor source according to the invention;

FIG. **6** is a perspective view showing still another modification of the mechanism for supplying and gasifying a liquid flavor source according to the invention;

NJOY Exhibit 1009.010

FIG. **7** is a perspective view showing still another modification of the mechanism for supplying and gasifying a liquid flavor source according to the invention;

FIG. **8** schematically shows a flavor-generating device according to another embodiment of the present invention;

FIG. **9** is a cross-sectional view taken along the line IX—IX of FIG. **8**;

FIG. **10** is a perspective view showing the mechanism for supplying and gasifying a liquid flavor source used in the flavor-generating device of FIG. **8**;

FIG. **11** is a perspective view showing still another modification of the mechanism for supplying and gasifying a flavor source;

FIG. **12** is a perspective view showing still another modification of the mechanism for supplying and gasifying a liquid flavor source according to the invention;

FIG. **13** is cross-sectional view taken along the line XII—XII of FIG. **12**;

FIG. **14** is a cross-sectional view showing another embodiment of the liquid passageway for a liquid flavor source used in a flavor-generating device according to the invention; and

FIG. **15** is a cross-sectional view showing still another embodiment of the liquid passageway for a liquid flavor source used in a flavor-generating device according to the invention.

DETAILED DESCRIPTION OF THE INVENTION

One feature of the present invention resides in that the transportation of a liquid flavor source from the liquid container containing the same to the heater site is effected by the capillary force or capillarity.

In the present invention, the liquid passageway through which the liquid flavor source is transported by the capillary force can be constituted by the inner region of at least one capillary tube, a gap or space between at least two plates spaced apart from each other in substantially parallel, or an inter-communicating void or pore structure filled in an enclosure. The intercommunicating pore structure refers to a structure having intercommunicating voids or pores through which the liquid may be elevated from the inlet of the passageway which is in fluid communication with the liquid flavor source contained in the liquid container to the outlet of the passageway by the capillary force. Representative examples of the structure include open-cell foamed structure, and bundled fibers, but should not be limited thereto.

The height from the liquid level of the liquid flavor source to the outlet of the liquid passageway is a height or vertical distance within which the liquid flavor source may be elevated by the capillary force, and is determined by the properties of the liquid flavor source and the width of the liquid passageway (the diameter for the capillary tube, the gap distance for the substantially parallel plates, etc.). When the passageway is inclined, the height is not the length of the liquid passageway, but the vertical distance from the liquid level of the liquid flavor source to the outlet of the liquid passageway.

The height h can be calculated from the following equation:

$$h=2\upsilon \cos \theta/d\rho g \quad (1)$$

where υ is the surface tension of the liquid flavor source, θ is the contact angle of the liquid flavor source with the material which constitutes the liquid passageway, d is the width of the liquid passageway, ρ is the density of the liquid flavor source, and g is the gravitational acceleration.

When the liquid passageway is defied by the intercommunicating pore structure as note above, the equation (1) is not directly applied. In such a case, the equation (1) can be applied, using, as d, an average diameter or size of the voids or pores in the intercommunicating pore structure.

Since the liquid level is lowered due to the gasification or evaporation, including the gasification by intentional heating, of the liquid flavor source, it is desirable that the height be determined taking the possible lowest level of the liquid flavor source into account. Further, it is preferred that the inlet of the liquid passageway reach the possible lowest level of the liquid flavor source in the container.

In the present invention, it is preferred that the liquid level of the liquid flavor source be under substantially atmospheric pressure because the liquid flavor source is elevated from the liquid container to the outlet of the liquid passageway by the capillary force as noted above. The inside of the container can be kept under the atmospheric pressure by providing, at the upper part of the container, a through hole, such as a pin hole, which communicates with the atmosphere outside the container.

There will now be described below some of the embodiments of the present invention.

FIG. **1** shows the construction of a flavor-generating device **10** according to one embodiment of the present invention. In the device **10**, the liquid passageway is constituted by a capillary tube.

As shown in FIG. **1**, the flavor-generating device **10** includes a casing **12** made of plastic, metal, ceramic, wood, etc. The inner space of the casing **12** is partitioned into an upper chamber **121** and a lower chamber **122** by a partition wall **13**. As will be described herein later, the upper chamber **121** is used as a gas passageway **20** for forming a gaseous stream of a flavor which is to be inhaled by a user. On the other hand, the lower chamber **122** is used as a housing for housing a liquid container **32**, a power source **44** and a control circuit.

An inhalation port holder **14** defining a cylindrical opening is mounted at one side end portion of the upper chamber **121** of the casing **12**. A mouth piece **16** having an inhalation port **22** through which a user inhales a flavor is detachably inserted into the holder **14**. The mouth piece **16**, which is directly taken in the mouth of a user, is made of, for example, a plastic material or wood. Incidentally, it is possible to insert a filter into the holder **14** in place of using the mouth piece **16**.

On the other hand, an air intake port **18** for introducing the air into the upper chamber **121** is formed on the other side portion of the upper chamber **121**. The gas passageway **20** is defined within the upper chamber **121** of the casing **12**, between the air intake port **18** and the inhalation port **22**. It is possible to set the air intake port **18** in a manner to have an opening area conforming with a predetermined air intake amount. It is also possible to arrange an adjusting ring (not shown) having a plurality of openings in a manner to surround the air intake port **18** of the casing **12**. In this case, the air flow rate into the gas passageway **20** can be adjusted by adjusting the position of the adjusting ring relative to the air intake port **18**.

A squeeze plate **24** having a squeeze hole **24***a* formed in the central portion is arranged within the gas passageway **20** and positioned close to the air intake port **18**. The squeeze hole **24***a* of the squeeze plate **24** act to regulate or direct the air introduced from the intake port **18** selectively toward a outlet portion **36***b* of a capillary tube **36** described in detail below.

NJOY Exhibit 1009.011

The free space between the outlet portion **36***b* of the capillary tube **36** and the inhalation port **22** can act as a cooling chamber **21** which constitutes a part of the gas passageway. Corresponding to the cooling chamber **21**, an outer air introduction hole **26** is formed through the ceiling of the upper chamber **121** to permit the outer air to be introduced into the cooling chamber **21**. A gas containing a flavor, which is formed by the heating of the liquid flavor source with a heater **42**, is mixed with the outer air within the cooling chamber **21** so as to be cooled and, then, flows to reach the inhalation port **22**. The outer air introduction hole **26** can be set to have an opening area conforming with a predetermined outer air introduction amount. It is also possible to arrange an adjusting shutter **28** having a plurality of openings in the casing **12** in a manner to surround the outer air introduction hole **26**, as shown in the drawing. In this case, the amount of the outer air introduced into the cooling chamber **21** can be adjusted by adjusting the position of the adjusting shutter **28** relative to the outer air introduction hole **26**.

Further, a filter (not shown) can be arranged between the cooling chamber **21** and the inhalation port **22** in a manner to cover the inhalation port **22**. The filter serves to control the pressure loss to permit the gas containing the flavor to be inhaled comfortably by a user. The material of an ordinary tobacco filter such as cellulose acetate or pulp can be used for forming the filter.

On the other hand, the liquid container **32** housing a liquid flavor source **34** is fixed within the lower chamber **122** of the casing **12**. The liquid flavor source **34** is housed in the container **32** in an amount conforming with a plurality of puffs of a user. The liquid flavor source **34** contains at least a flavor substance. However, in order to add smoke to the flavor, it is possible for the liquid flavor source **34** to contain a substance forming aerosol when heated. As a substance for forming an aerosol, it is possible to use alcohols, sugars, water and a mixture of at least two of these materials. The alcohols used in the present invention include, for example, glycerin, propylene glycol, and a mixture thereof.

To be more specific, it is possible for the liquid flavor source **34** to contain extracts from various natural products and/or components thereof depending on the use of the flavor-generating device. For example, where the device is used as a simulated smoking article, it is possible for the liquid flavor source **34** to contain tobacco components such as tobacco extracts and a tobacco smoke condensate.

The capillary tube **36** for transporting the liquid flavor source by the capillary force is inserted within the liquid container. The capillary tube **36** defines a liquid passageway **37** for the liquid flavor source, and its lower end **36***a* is positioned in the vicinity of the bottom of the liquid container **32**.

In view of the liquid flavor source **34** mentioned above, preferably the inner diameter of the capillary tube **36** is set to fall within a range of 0.01 mm and 3 mm, more preferably a range of 0.05 mm to 1 mm, and particularly preferably 0.1 mm and 0.8 mm.

In order to ensure the transfer of the liquid flavor source **34** by the capillary force, the liquid container **32** is provided with an opening **33** communicating with the outer atmosphere so as to maintain the inner pressure of the liquid container **32** at an atmospheric pressure. It is desirable for the opening **33** to be formed at the highest position of the container **32** during the ordinary operation of the flavor-generating device and to have a sufficiently small diameter so that the liquid flavor source **34** may not leak to the outside therethrough even if the device is inadvertently turned upside down. For example, a pin hole extending through the wall of the container **32** satisfies the particular requirements of the opening **33**.

The upper end portion of the capillary tube **36** protrudes into the upper chamber **121** of the casing **12** somewhat downstream of the squeeze plate **24** and is equipped with the heater **42** serving to gasify the liquid flavor source **34**. In the embodiment shown in FIG. **1**, the heater **42** consists of a tubular body mounted to the capillary tube **36** and having an inner diameter equal to that of the capillary tube **36**. In other words, the outlet port **36***a* of the liquid passageway **36** is formed by the heater **42** itself. An electric power is supplied from a power source **44** detachably mounted within the lower chamber **122** of the casing **12** to the electric heater **42**. It is desirable to use as the power source **44** a DC power source available on the market such as a primary battery (dry battery), or a secondary battery (rechargeable battery). However, it is also possible to use an AC power source as the power source **44**. It is also possible to mount the power source **44** outside the casing **12** or to mount the power source **44** separately so as to use an electric wire connecting the power source **44** to the casing **12**.

The heater **42** and the power source **44** are driven. under the control of the control circuit **46** fixed within the lower chamber **122**. To the control circuit **46**, a switch **48** for the heater **42** which can independently turn the heater on, and a sensor **52** for detecting the inhalation action of a use are connected. Further, a switch **50** for the on/off operation of the power source **44** is connected to the power source **44**.

The switches **48** and **50** are provided on the outer surface of the lower chamber **122** of the casing **12**.

When the device is not used, operation of the device can be ceased by turning the power source switch **50** off manually. Of course, when the device is used, firstly the power source switch is turned on. Further, the heater switch **48**, when turned on after the power source switch **50** is turned on, can drive the heater **42** independently of the detection, by the sensor **52**, of the inhalation action of a user. That is, after the power source **44** is driven, the heater can be made into a heated state by turning on the heater switch **48**. When the control circuit **46** detects the on state of the heater switch **48**, it ceases the operation of the sensor **52**.

Each of the switches **48** and **50** has a mechanism equal to a general small depression type switch such as a micro limit switch having an electrical contact.

The sensor **52** for detecting the inhaling action of the user is arranged within the upper chamber **121** of the casing **12**, and is positioned between the squeeze plate **24** and the heater **42**. It is possible to use as the sensor **52** a general pressure sensor for detecting a change in the pressure within the chamber **121** as a change in electrical resistance, as a change in electrical capacitance or as a piezoelectric electromotive force, or a rocking vane type sensor for detecting a gas stream within the chamber **121**.

The control circuit **46** serves to start up the heater **42** based on the signal from the heater switch **48** or in accordance with the inhaling action of the user based on the signal from the sensor **52** so as to gasify the liquid flavor source **34** at the outlet portion **36***b* of the capillary tube **36**. The signal processing and control are performed within the control circuit **46** in accordance with, for example, a known analog control, a two-position control or a combination thereof.

A liquid amount sensor **54** for detecting the remaining amount of the liquid flavor source **34** is arranged within the liquid container **32**. The sensor **54** may consist of a contact type sensor serving to detect a change in the electrical conductivity of the liquid container **32** accompanying a

NJOY Exhibit 1009.012

change in the remaining amount of the liquid flavor source **34**. Also, an electrical display means, e.g., a lamp **56** which may be constituted by a light emitting diode, is arranged on the outer surface of the lower chamber **122** of the casing **12** in order to inform the user that the remaining amount of the liquid flavor source **34** within the liquid container **32** is small. Each of the liquid amount sensor **54** and the lamp **56** is connected to the control circuit **46** so as to be operated under control of the control circuit **46**.

Also, it is possible to apply an electrical locking to the device so as to inhibit the inhaling action of the user in addition to the lighting of the lamp **56** in order to inform the user that the remaining amount of the liquid flavor source **34** is small. Incidentally, it is also possible to use as the sensor **54** a non-contact type sensor which detects a change in the remaining amount of the liquid flavor source **34** as a change in the reflectance of, for example, an ultrasonic wave.

A pouring port **58** for replenishing the liquid flavor source **34** is connected to the liquid container **32**. An end portion of the pouring port **58** is exposed to the outside of the casing **12** so as to permit pouring the liquid flavor source **34** into the liquid container **32**. Usually, a removable cap **59** is provided in the exposed end portion of the pouring port **58**. As described previously, the liquid container **32** has an inner volume large enough to store the liquid flavor source **34** in an amount corresponding to a plurality of puffs of the flavor enjoyed by the user. However, since the liquid flavor source **34** can be replenished, the flavor-generating device of the present invention can be used continuously without replacing or exchanging the liquid container **32**.

Incidentally, a transparent peeping window (not shown) can be formed in that portion of the side wall of the casing **12** which corresponds to the liquid container **32** in place of using the liquid amount sensor **54** in order to observe the remaining amount of the liquid flavor source **34** within the liquid container **32**. In this case, the liquid container **32** itself must be formed of a transparent or translucent material. Naturally, the remaining amount of the liquid flavor source **34** within the liquid container **32** can be observed through the peeping window so as to find the timing of replenishing the liquid flavor source **34**. It is also possible to employ an optical system using a prism for observing the remaining amount of the liquid flavor source **34** within the liquid container **32**.

The flavor-generating device **10** shown in FIG. **1** can operated as in the following manner, in which the heater switch **48** is kept turned off.

Specifically, where the device **10** is used for inhaling a flavor, the power source switch **50** is turned on first by a user. Then, the mouth piece **16** is taken in the mouth of the user for the inhaling action through the inhalation port **22**. As a result, an inhaling action signal is transferred from the sensor **52** to the control circuit **46**. Then, under the control of the control circuit **46**, an electric power is supplied from the power source **44** to the heater **42** so as to turn the heater **42** on.

In this step, the liquid flavor source **34** is already transported to the outlet port **36***a* of the capillary tube **36** by the capillary force of the capillary tube **36** as shown in FIG. **2**A. If the heater **42** is turned on under this condition, the liquid flavor source **34** within the outlet port **36***a* is instantly gasified by the heat generated from the heater **42** as shown in FIG. **2**B so as to be supplied into the gas passageway **20**. Upon gasification of the liquid flavor source **34** within the outlet port **36***a* by the heating with the heater **42**, the liquid flavor source **34** is newly supplied from the liquid container **32** into the outlet port **36***a* of the capillary tube **36** by the capillary force of the capillary tube **36**, as shown in FIG. **2**C. In this fashion, supply and gasification of the liquid flavor source **34** are repeated within the outlet port **36***a* of the capillary tube **36**.

The gasified flavor source is mixed with the main air introduced through the air intake port **18** and the squeeze hole **24***a* into a region around the outlet port **36***a* of the capillary tube **36** in accordance with the inhaling action of the user and, then, the mixture is transferred into the inhalation port **22**. The amount of the air introduced through the outer air inlet port **26** can be changed during the inhaling action, if necessary, by controlling the adjusting shutter **28**. It follows that the taste of the air containing a flavor, which is transferred to the inhalation port **22**, can be changed appropriately in accordance with the preference of the user.

FIGS. **3** to **5** are perspective views each showing a modification of the mechanism for supplying and gasifying the liquid flavor source **34**.

In the modification shown in FIG. **3**, a ring-shaped heater **72** is arranged to cover the outlet port **36***a* of the capillary tube **36**.

In the modification shown in FIG. **4**, a rod-like heater **74** is inserted into the outlet port **36***a* of the capillary tube **36**.

Further, in the modification shown in FIG. **5**, a plate-like heater **76** is inserted into the outlet port **36***a* of the capillary tube **36**.

Any of these modifications permits producing the particular function described previously in conjunction with the embodiment shown in FIG. **1**.

FIGS. **6** and **7** are oblique views each showing an additional modification of the mechanism for supplying and gasifying the liquid flavor source **34**.

In the modification shown in FIG. **6**, three capillary tubes **36** are inserted into the liquid container **32**. In addition, a rod-like heater **74** as shown in FIG. **5** is inserted into the outlet port **36***a* of each of the capillary tubes **36**.

In the modification shown in FIG. **7**, three capillary tubes **36** are inserted into the liquid container **32**. In addition, a heater frame **92** is mounted to the outlet ports **36***a* of these three capillary tubes **36**. To be more specific, the heater frame **92** is provided with three plate-like heaters **76** as shown in FIG. **6** in a manner to correspond to the three outlet ports **36***a* of the capillary tubes **36**. Further, air passageways **94** are formed between adjacent capillary tubes **36** arranged in the heater frame **94** in a manner to extend in the longitudinal direction of the capillary tube. Of course, the particular construction permits sufficiently mixing the gaseous flavor substance with the air.

FIG. **8** schematically shows the construction of a flavor-generating device according to another embodiment of the present invention. FIG. **9** is an enlarged cross-sectional view taken along the line IX—IX of FIG. **8**. FIG. **10** is a perspective view showing the liquid passageway and the heater together with the liquid container used in the device of FIG. **8**. The same or similar members of the device as in FIG. **1** are denoted by the same reference numerals and the detailed explanation thereof is omitted in the following description.

In the device **100** shown in FIG. **8**, the upper chamber **121** and the lower chamber **122** constitutes separate chamber unlike the device shown in FIG. **1** wherein one casing is partitioned by the partition wall **13** into the two chambers. The lower chamber **122** has an inclined upper wall. The upper chamber **121**, which has a hollow cylindrical shape closed at one end (lower end), is provided on the lower chamber **121** along the inclined upper wall of the lower chamber **122**. Thus, the upper chamber **121** is correspond-

NJOY Exhibit 1009.013

ingly inclined as a whole. The lower chamber **122** is partitioned by a partition wall **131** into an upper sub-chamber **122***a*, which houses the control circuit **46**, and a lower sub-chamber **122***b*, which houses the electric power source **14**. In the device shown in FIG. **8**, the electrical connections are essentially the same as those in the device shown in FIG. **1**, and thus are not shown in FIG. **8**.

The air intake port **18** like one shown in FIG. **1** is provided at the closed end (lower end) of the upper chamber **121**. A mouthpiece **161** may be detachably inserted directly, i.e., without through a holder, into the open end portion (upper end portion) of the upper chamber **121**. The mouthpiece **161** has on its periphery a protrusion **161***a* for engaging with the open end edge so as to prevent a further insertion thereof into the upper chamber **121**. A mouthpiece sensor **101** is provided on the upper wall of the upper chamber **121** for detecting the sufficient insertion of the mouthpiece **161**. Such a position sensor **101** is known per se. Further, a filter **102** may be inserted into the mouthpiece **161** over the region from the position corresponding to the protrusion **161***a* to the proximal end of the mouthpiece **161**, i.e. inhalation portion of the mouthpiece **161**, as shown in FIG. **8**.

Further, a small exchangeable liquid container **3**:**2** containing the liquid flavor source and having an opening (not shown) like the opening **33** in FIG. **1** is arranged in the upper chamber **121** so as not to clog the air intake port **18**. A liquid passageway **371** for the liquid flavor source is provided in fluid communication with the liquid flavor source **34** in the container **32**. In the device shown in FIG. **8**, the liquid passageway **371** is defined between two substantially parallel plates spaced apart from each other. The distal end portion (the outlet portion of the liquid flavor source) of the liquid passageway **371** is heated by plate-like heaters **421** and **422** mounted to the plate **361** and **362**, respectively.

More specifically, as shown in FIG. **10**, the two plates **361** and **362** are arranged in substantially parallel, and space apart from each other with a distance sufficient for the capillary force to be exerted therebetween. The distance is preferably 0.01 mm to 2.0 mm. In the embodiment shown in FIG. **10**, the plate heaters **421** and **422** have the same thickness as the plates **361** and **362**, respectively, and are spaced apart with the same distance as in the plates **361** and **362**. Thus, in this case, the outlet portion of the liquid passageway **371** is constituted by the heaters **421** and **422**.

It should be noted in the present invention that the liquid passageway defined by the substantially parallel plates is fluid-tightly sealed at its sides by a sealing material (not shown) such as a plastic film or a metal foil so as to prevent the leakage or the evaporation of the liquid flavor source from the sides of the plates.

Returning to FIG. **8**, that portions of the plates including the heaters which protrude from the container **32** are surrounded by a cylindrical body **103** spaced apart from the plates with a predetermined distance. The cylindrical body **103** has a flange at its lower end portion. The flange **103***a* engages with the inner peripheral wall of the upper chamber **121**. As shown in FIG. **9**, the cylindrical body may have a rectangular cross section, and defines an air passageway **104** between it and the plates. The air passageway (air guiding path) **104** guides, along it, the air introduced by the inhalation action of the user from the air intake port **18** provided at the closed end edge of the upper chamber **121**. The introduced air embraces or surrounds the gasified liquid flavor source at the outlet portion of the liquid passageway **371**, and is directed toward the inhalation port by the air passageway **104**. Thus, the gasified flavor source does not tend to be condensed or deposited on the inner wall of the upper chamber **121**, and if any, the gasified flavor source is condensed or deposited on the inner wall of mouthpiece **161**. Therefore, the deposited flavor source can be removed from the device by cleaning or exchanging the mouthpiece. Further, by providing the air guiding path **104** which can direct the air locally or selectively to the gasified flavor source at the outlet portion of the liquid passageway, an aerosol formation efficiency can be more enhanced when the liquid flavor source contains the aerosol generation material, since the mixing of the gasified flavor source with the air and the cooling of the gasified flavor source thereby can be simultaneously effected efficiently by means of the air stream passing through the air guiding path **104**.

Incidentally, it is possible to provide an air flow rate-adjusting dial **105**, which is known per se, arranged downstream of the cylindrical body **103** and upstream of the liquid container **32**. By means of the air flow rate-adjusting dial **105**, the user can set the air flow rate and hence the suction resistance in accordance with the user's preference. Further, a display mechanism **106** for indicating the remaining amount of the power source **44** connected to the control circuit may be provided as shown in FIG. **8**.

FIG. **11** is a perspective view illustrating a modification of the mechanism for supplying and gasifying the liquid flavor source shown in FIG. **10**. In FIG. **11**, plate heaters **423** and **424** are provided in the opposing surface regions of the plates **361** and **362** defining the liquid passageway therebetween.

FIG. **12** is a perspective view showing still another modification of the mechanism for supplying and gasifying a liquid flavor source used in the device according to the invention. FIG. **13** is a cross-sectional view taken along the line XIII—XIII of FIG. **12**. In the mechanism shown in FIG. **12**, the two plates **361** and **362** and the two plate heaters **421** and **422**, like the ones shown in FIG. **10**, which define the liquid passageway **371** in fluid communication with the liquid flavor source in the container **32** penetrate the peripheral wall of the upper chamber **121** from below the upper chamber into the inside the upper chamber **121**. One end of the upper chamber **121** is closed, and an air passageway **201** which communicates with the outer atmospheric air outside the upper chamber **121**. As shown in FIG. **13**, the air passageway **201** is formed along the outer contour of the heaters **421** and **422**, and consists of a laterally elongated upper passageway portion **201***a* having a length slightly larger than the width of the plates **361** and **362**, side passageway portions **201***b* and **201***c* which are connected to the upper portion **201***a* at its both end and extend to the positions corresponding to the lower ends of the heaters **421** and **422**. The passageway **201** can produce the same or similar effects noted above as those which the air passageway **104** shown in FIG. **9** or **8** produces.

FIG. **14** is a cross-sectional view showing another embodiment of the liquid passageway for a liquid flavor source used in a flavor-generating device according to the invention. In this case, a liquid passageway **372** is constituted by the intercommunicating pore structure **302** filled in an enclosure **301**, as mentioned earlier. The enclosure **301** may be provided by a tube, or two plates arranged spaced apart from each other wherein the both sides are sealed. In this embodiment, a heater or heaters (not shown) may be arranged as in FIG. **1**, **10** or **11**. Further, as shown in FIG. **15**, the intercommunicating pore structure **302** may protrude from the enclosure **301**. In such a case, a heater **425** can be provided on the protruded end of the intercommunicating pore structure **302**.

FIG. **15** is a cross-sectional view showing still another embodiment of the liquid passageway for a liquid flavor source used in a flavor-generating device according to the invention.

NJOY Exhibit 1009.014

In order to facilitate the understanding of the present invention, the features of the present invention are described with reference to some embodiments and modifications of the present invention. However, these features can be combined appropriately depending on the object of the flavor-generating device. In other words, the present invention can be worked in various modes other than the embodiments shown in the drawing within the technical scope of the present invention.

As described above, the present invention provides a flavor-generating device, which can be driven with a low energy, which permits preventing the liquid flavor source from being wasted, and which permits generating a flavor substance when a user takes a puff of the flavor substance.

Additional advantages and modifications will readily occur to those skilled in the art. Therefore, the invention in its broader aspects is not limited to the specific details and representative embodiments shown and described herein. Accordingly, various modifications may be made without departing from the spirit or scope of the general inventive concept as defined by the appended claims and their equivalents.

What is claimed is:

1. A flavor-generating device comprising:

a chamber having an air inlet port for introducing the air thereinto and an inhalation port through which a user inhales a flavor, and defining a gas passageway between the air inlet port and the inhalation port;

a liquid container for storing a liquid containing a flavor substance, and maintained at substantially an atmospheric pressure;

at least one liquid passageway having a first end portion which is in a fluid communication with the liquid and a second end portion which is in a fluid communication with the gas passageway, for transporting the liquid from the liquid container to the second end portion by capillary force, the capillary force being created predominantly by the attraction between the liquid containing a flavor substance and an interior of the liquid passageway; and

a heater mounted at the second end portion of the at least one liquid passageway, for heating and gasifying the liquid transported from the liquid container, the heater heating and gasifying said liquid while it is disposed in said second end portion, thereby forming a gaseous stream of said liquid exiting said second end portion into said chamber for inhalation through said inhalation port.

2. The device according to claim **1**, wherein said at least one liquid passageway includes at least one capillary tube.

3. The device according to claim **1**, wherein said at least one liquid passageway includes at least one pair of substantially planar elements spaced apart from each other.

4. The device according to claim **1**, wherein said at least one liquid passageway includes an intercommunicating pore structure filled in an enclosure.

5. The device according to claim **1**, wherein said heater is mounted at the tip end of the at least one liquid passageway.

6. The device according to claim **1**, wherein said at least one liquid passageway includes a plurality of liquid passageways, each passageway including a capillary tube equipped with a heater.

7. The device according to claim **1**, further comprising detecting means for detecting the inhaling action of a user; and control means for controlling the heater such that said heater is driven upon inhaling action of the user.

8. The device according to claim **1**, wherein said air passageway is formed to permit the air to be introduced selectively toward the second end portion of the at least one liquid passageway.

9. The device according to claim **1**, wherein said liquid container is exchangeably mounted.

10. The device according to claim **2**, wherein said at least one capillary tube has a diameter of between about 0.01 mm and 3 mm.

11. The device according to claim **10**, wherein said at least one capillary tube has a diameter of between about 0.05 mm and 1 mm.

12. The device according to claim **2**, wherein said liquid container has an opening for access by said at least one capillary tube into said container, and an opening exposed to ambient atmospheric pressure, the opening to ambient atmospheric pressure allowing atmospheric pressure to be maintained within said container.

13. The device according to claim **2**, wherein said heater includes an annular element disposed at the second end portion of each at least one capillary tube.

14. The device according to claim **2**, wherein said heater is a cylindrical element.

15. The device according to claim **2**, wherein said heater includes at least one planar element, one planar element extending across a diameter of each said at least one capillary tube.

16. The device according to claim **6**, further comprising a heater frame partially surrounding the second end portion of each of said plurality of capillary tubes.

17. The device according to claim **3**, wherein the space between each said pair of substantially planar elements is partially closed by a film placed on sides of the planar elements, with the second end of the at least one liquid passageway remaining open.

18. The device according to claim **3**, wherein the heater includes heating elements provided on opposed faces of each said at least one pair of substantially planar elements.

* * * * *

NJOY Exhibit 1009.015