UNITED STATES PATENT AND TRADEMARK OFFICE

BEFORE THE PATENT TRIAL AND APPEAL BOARD

SONY INTERACTIVE ENTERTAINMENT INC. AND SONY GROUP CORPORATION
Petitioners

v.

RESONANT SYSTEMS, INC.
Patent Owner

Case No. IPR2024-00568
Patent No. 9,369,081

DECLARATION OF DR. GREGORY F. WELCH

TABLE OF CONTENTS

I. Introduction 1

A. Materials Reviewed 1

B. Background and Qualifications 4

II. Legal Framework 12

III. Opinion 19

A. Overview of the ’081 Patent 19

B. Field of Endeavor of the ’081 Patent 31

C. Background of the Prior Art 32

1. Foundational Principles of Electricity and Magnetism 32

2. Overview of Voice-Coil Actuators 36

3. Applications of Voice-Coil Actuators 41

4. Vibrational Feedback and User Preferences 42

D. Claim Construction 48

E. Summary of the Prior Art References 51

1. Houston 51

2. Goldenberg 57

3. Ibuki 60

4. Rosenberg 62

5. Tierling 63

6. Fukumoto 67

F. Level of a Person Having Ordinary Skill in the Art 70

G. Obvious to Combine Embodiments of Houston 71

1. Obvious to Implement Haptic Interface 624 as the Game Controller of Figure 16 73

2. Obvious to Implement Vibration Device 630 Using the Linear Motion Vibration Actuator of Figure 4 76

3. Obvious to Implement Vibration Controller 632 as a Microprocessor Per the Embodiment of Figure 31 79

H. Ground 1: Claims 1, 2, 7, 8, and 17 are obvious over Houston and Goldenberg 82

1. Claim 1 82
2. Claim 2 – The linear vibration module of claim 1 wherein the control component is one of: an variable oscillator circuit with additional control circuitry; and a control component that includes a microprocessor, a control program, stored in an electronic memory within, or separate from, the microprocessor, the control program executed by the microprocessor to control supply of power from the power supply to the driving component to cause the moveable component to oscillate at a frequency and an amplitude specified by user input received from the user-input features. 105
3. Claim 7 – The linear vibration module of claim 1 wherein the driving component comprises one or more electromagnetic coils that generate magnetic fields parallel to the directions in which the moveable component is driven by the driving component. 109
4. Claim 8 – The linear vibration module of claim 1 112
5. Claim 17 – The linear vibration module of claim 1 wherein the control component controls supply of power from the power supply to the driving component to cause the moveable component to oscillate at a frequency and an amplitude that are independently specified by user input received from the user-input features. 120

I. Ground 2: Claims 3-6 are obvious over Houston, Goldenberg, and Ibuki. 121

1. Claim 3 – The linear vibration module of claim 1 wherein the control component receives output signals from sensors within the linear vibration module during operation of the linear vibration module and adjusts one or more operational control outputs of the control component according to the received output signals from the sensors. 121
2. Claim 4 – The linear vibration module of claim 1 wherein the control component adjusts the one or more operational control outputs of the control component according to the received output signals from the sensors in order that subsequent operation of the linear vibration module produces desired outputs from the one or more sensors corresponding to one or more operational control parameters..... 128
3. Claim 5 – The linear vibration module of claim 4 wherein the one or more operational control parameters is a strength of vibration produced by the linear oscillation of the moveable component; and wherein the one or more operational control outputs is a frequency at

which the control component drives the moveable component to linearly oscillate, the control component dynamically adjusting the power supplied to the driving component to produce linear oscillation of the movable component at a resonant frequency for the linear vibration module. 129

4. Claim 6 – The linear vibration module of claim 4 132

J.Ground 3: Claim 11 is obvious over Houston, Goldenberg, and Rosenberg 136

1. Claim 11 – The linear vibration module of claim 1 wherein the linear vibration module further includes two or more driving components, each, when activated, driving the moveable component to linearly oscillate with an amplitude particular to the activated driving component. 136

K. Ground 4: Claim 15 is obvious over Houston, Goldenberg, and Tierling 139

1. Claim 15 – The linear vibration module of claim 1 wherein the control component drives simultaneous oscillation of the moveable component at two or more frequencies to generate complex vibration modes. 139

L. Ground 5: Claim 16 is obvious over Houston, Goldenberg, Tierling, and Fukumoto 142

1. Claim 16 – The linear vibration module of claim 15 wherein the complex vibration modes include: 142

IV. Conclusion 150

I, Dr. Gregory F. Welch, declare the following:

I. INTRODUCTION

1. I have been retained by counsel for Petitioners as a technical expert in the above-captioned case. Specifically, I have been asked to render certain opinions in regard to the IPR petition with respect to U.S. Patent No. 9,369,081 (the "'081 Patent"). I understand that the Challenged Claims are claims 1-8, 11, and 15-17, and my opinions are limited to those claims. My compensation in this matter is not based on the substance of my opinions or the outcome of this matter. I have no financial interest in Petitioners.

A. Materials Reviewed

2. In reaching my opinions in this matter, I have reviewed the following materials:

- Exhibit 1001 – U.S. Patent No. 9,369,081 ("'081 Patent");
- Exhibit 1002 – File History of the '081 Patent (the "'081 File History");
- Exhibit 1005 – U.S. Patent Publication No. 2006/0290662A1 to Houston et al. ("Houston");
- Exhibit 1006 – U.S. Patent Publication No. 2004/0056840 to Goldenberg et al. ("Goldenberg");
- Exhibit 1007 – U.S. Patent No. 6,441,571 to Ibuki et al. ("Ibuki");
- Exhibit 1008 – U.S. Patent No. 5,805,140 to Rosenberg et al. ("Rosenberg");
- Exhibit 1009 – U.S. Patent Publication No. 2007/0285216A1 to Tierling et al. ("Tierling");

- Exhibit 1010 – U.S. Patent Publication No. 2002/0149561A1 to Fukumoto et al. ("Fukumoto");

- Exhibit 1011 – Raymond A. Serway & John W. Jewett, Principles of Physics: A Calculus-Based Text (4th ed. 2006) ("Serway");

- Exhibit 1012 – Rex Miller & Mark R. Miller, Electronics the Easy Way (4th ed 2002) ("Miller");

- Exhibit 1013 – Rockwell Automation, Industrial Automation Glossary (5th ed. 1997) ("Glossary");

- Exhibit 1014 – Bill Black, Mike Lopez, and Anthony Morcos, *Basics of Voice Coil Actuators*, PCIM, 44-46 (July 1993) ("Black");

- Exhibit 1015 – Hi-Dong Chai, Electromechanical Motion Devices, Prentice-Hall, Inc. (1998) ("Chai");

- Exhibit 1016 – U.S. Patent No. 6,982,696 to Shahoian ("Shahoian");

- Exhibit 1017 – B. Lequesne, *Permanent Magnet Linear Motors for Short Strokes*, 32 IEEE Transactions on Industry Applications 161 (1996) ("Lequesne");

- Exhibit 1018 – N. Chen, Y.J. Tang, Y.N. Wu, X. Chen, L. Xu, *Study on Static and Dynamic Characteristics of Moving Magnet Linear Compressors*, 47 Cryogenics 457 (2007) ("Chen");

- Exhibit 1019 – I. Boldea & S.A. Nasar, *Linear Electric Actuators and Generators*, 14 IEEE Transactions on Energy Conversion 712 (1999) ("Boldea");

- Exhibit 1020 – Z. Q. Zhu, X. Chen, D. Howe, and S. Iwasaki, *Electromagnetic Modeling of a Novel Linear Oscillating Actuator*, 44 IEEE Transactions on Magnetics 3855 (2008) ("Zhu");

- Exhibit 1021 – Jeffrey J. Berkley, *Haptic Devices*, (Mimic Technologies Inc., 2003) ("Berkley");

- Exhibit 1022 – Jenny Preece, Yvonne Rogers, Helen Sharp, David Benyon, Simon Holland, Tom Carey, Human-Computer Interaction, Addison-Wesley (1994) ("Preece");

- Exhibit 1023 – Ivan Poupyrev, Shigeaki Maruyama & Jun Rekimoto, *Ambient Touch: Designing Tactile Interfaces for Handheld Devices*, in Proceedings of the 15th annual ACM symposium on User interface software and technology 51 (2002) ("Poupyrev");

- Exhibit 1024 – *History of Haptic Technology in Video Game Industry | Teslasuit Blog*, Teslasuit (2017), https://teslasuit.io/blog/history-haptic-technology/ (retrieved Jan 22, 2024) ("Teslasuit");

- Exhibit 1025 – *Sony Analog Controller (DualShock™)*, Sony Computer Entertainment Inc. (2000) ("DualShock Manual");

- Exhibit 1026 – Star Fox 64 Instruction Booklet, Nintendo of America Inc. (1997) ("Star Fox 64 Instruction Booklet");

- Exhibit 1027 – John Culbert, *Gran Turismo 2 Compendium (Sony Playstation)*, https://gamefaqs.gamespot.com/ps/197469-gran-turismo-2/faqs/5146 (October 2000, retrieved Jan 22, 2024) ("Culbert");

- Exhibit 1028 – Martin Watts, *Feature: Taking a Look Back at the Nintendo 64 Rumble Pak*, https://www.nintendolife.com/news/2013/07/feature_taking_a_look_back_at_the_nintendo_64_rumble_pak (July 2013, retrieved Jan 22, 2024) ("Watts");

- Exhibit 1029 – *Logitech iFeel mouses*, Dan's Data, http://www.dansdata.com/ifeel.htm (March 15, 2001, retrieved August 1, 2023) ("Dan's Data");

- Exhibit 1030 – Steven Butts, Logitech iFeel Optical Mouse Review, IGN, https://www.ign.com/articles/2001/02/06/logitech-ifeel-optical-mouse-review (February 6, 2001, retrieved July 31, 2023) ("Butts");

- Exhibit 1031 – N64 Rumble Pak Instruction Booklet, Nintendo of America Inc. (1997) ("N64 Rumble Pak Manual");

- Exhibit 1032 – Microsoft Press, Microsoft Computer Dictionary (5th ed. 2002) ("Microsoft Computer Dictionary");

- Exhibit 1033 – G. Davey, Review of the Oxford Cryocooler, in Advances in Cryogenic Engineering: Part A & B 1423 (1990) ("Davey"); and

- Exhibit 1034 – Alan V. Oppenheim, Alan S. Willsky & Syed Hamid Nawab, Signals & Systems (2nd ed. 1997) ("Oppenheim").

B. Background and Qualifications

3. I have summarized in this section my educational background, career history, and other qualifications relevant to this matter. I have also included a current version of my curriculum vitae, which is attached as Appendix A.

4. I am a Pegasus Professor and the AdventHealth Endowed Chair in Healthcare Simulation at the University of Central Florida (UCF) with appointments in the Computer Science Department in the College of Engineering & Computer Science, the School of Modeling, Simulation, and Training, and the College of Nursing.

5. In 1986, I received a B.S. degree in Electrical Engineering Technology from Purdue University (with Highest Distinction). In 1995, I received an M.S. degree in Computer Science from the University of North Carolina at Chapel Hill (UNC), and in 1997, I received a Ph.D. degree in Computer Science from UNC.

6. Previously, I have been a Research Professor at the University of North Carolina at Chapel Hill, where I also served as a site-coordinator for the National Science Foundation's Science and Technology Center (STC) for Computer Graphics and Scientific Visualization. (The STC was a joint Center with UNC, Caltech, The University of Utah, Cornell University, and Brown University.) Prior to that I was a Senior Engineer at Northrop-Grumman's Defense Systems Division where I worked

on the AN/ALQ-135 electronic countermeasures system for the U.S. Air Force F-15 Eagle aircraft. Prior to that I was a member of the technical staff of NASA's Jet Propulsion Laboratory where I worked on the Voyager Spacecraft project.

7. My current research interests include human-computer interaction, virtual reality (VR) and augmented reality (AR), human motion tracking systems, projector-based graphics, computer vision, virtual humans, and related applications for training, assessment, and practice in domains such as healthcare and defense. I have co-authored over 200 peer-reviewed publications in these areas since 1992, and I am a co-inventor on multiple related patents. I am a Fellow of the National Academy of Inventors (NAI) and a Fellow of the Institute of Electrical and Electronics Engineers (IEEE).

8. My personal awards include the IEEE and NAI Fellow elevations (above), the IEEE VGTC Virtual Reality Technical Achievement Award in 2018, a UCF Luminary Award in 2017, a UCF Research Incentive Award in 2017, an ISMAR Rock StAR Award in 2016, and an Excellence in Teaching Award at UNC in 2007. Shared awards in include multiple awards for papers and demos. With co-authors Prof. Ramesh Raskar, Prof. Henry Fuchs, and Deepak Bandyopadhyay I was awarded the Long Lasting Impact Paper at ISMAR 2016.

9. I currently supervise over $5 million in research funding and am jointly responsible for over $35 million in grants overall since 1996. Examples of grantors

for my research include the National Science Foundation (NSF), the Office of Naval Research (ONR), The National Institutes of Health National Library of Medicine (NIH-NLM), the Defense Advanced Research Projects Agency (DARPA), the Department of Energy (DOE), and private companies—all involving multi-disciplinary and multi-institutional projects.

10. As a computer scientist and engineer, my activities and expertise span both software and hardware, including software systems and interfaces. Much of my academic work since the early 1990s has focused on research and associated development related to human-computer interaction, including real-time and on-line human motion sensing, input and output controls, signal processing, and motion-related event processing, employing a variety of hardware systems including a various sensors, input and output devices, general purpose computers, embedded systems, and custom circuitry.

11. A prime example is the HiBall Tracking system that I co-developed in the 1990s. The system served to track the six degree-of-freedom (6DOF) position and orientation of a target such as a head, hand, or handheld device in a three-dimensional (3D) space. The HiBall Tracking system is an implementation of my Ph.D. work at UNC in the mid-1990s, where I introduced a new approach to sense and track a user's position and orientation using a sequence of single sensor measurements, described in my Ph.D. dissertation titled "SCAAT: Incremental

Tracking with Incomplete Information." A key realization for this approach is that the single sensor observations provide some information about the user's state, and thus can be used to incrementally improve a previous estimate. By recursively applying this principle, incorporating new sensor measurement data as soon as it is measured, a user's pose can be estimated more frequently, with less latency, and with improved accuracy.

12. I have incorporated tactile (haptic) feedback in multiple research projects. A relatively recent example is work I refer to broadly as "tactile telepresence for isolated patients." Conceived of during the COVID-19 pandemic, this work is aimed at providing an isolated patient and remote visitors (e.g., loved ones) with visual interactions that are augmented by touch-a perception of being touched for the isolated patient and a perception of touching for the visitors. We do so via linear resonate actuators embedded in a headband and arm bands placed on the patient, to allow the patient to feel the sensation of the remote visitor's touch, and the vibrotactile devices in tablet computers to provide tactile feedback to the remote visitor. We presented a poster on this work at a conference in 2020. (Nafisa Mostofa, Indira Avendano, Ryan P. McMahan, and Greg Welch. Tactile Telepresence for Isolated Patients. In A. Kulik, M. Sra, K. Kim, and B.-K. Seo, editors, ICAT-EGVE 2020 - International Conference on Artificial Reality and Telexistence and Eurographics Symposium on Virtual Environments - Posters and

Demos, pages 7-8. The Eurographics Association, 2020.) This work has also resulted in two issued patents so far: U.S. Patent No. 11,287,971 ("Visual-Tactile Virtual Telepresence") and U.S. Patent No. 11,106,357 ("Low Latency Tactile Telepresence"), both with Ryan McMahan and Gerd Bruder.

13. Another example is something we refer to as smart moulage in 2019-2022. In the context of medical simulation, moulage refers to a tangible pliable (e.g., silicon based) model of a wound that can be attached to a human body to simulate the shape, feel, and appearance of a wound. Our smart moulage is pliable moulage with sensors and actuators embedded inside to simulate the physical (tactile and haptic) characteristics of the wound, and passive or active features that facilitate tracking for the use of Augmented Reality to simulate the appearance of the wound. For example, the moulage can be used to sense when a trainee applies pressure to the wound, so that a physiological simulation can adjust the patient's blood pressure, and the moulage can provide vibratory feedback to simulate the pulsing sensation associated with an arterial wound. This work has resulted in two issued patents so far: U.S. Patent No. 10,854,098, ("Adaptive Visual Overlay Wound Simulation") and U.S. Patent No. 10,803,761 ("Multisensory Wound Simulation"), both with Joseph LaViola II, Francisco Guido-Sanz, Gerd Bruder, Mindi Anderson, and Ryan Schubert.

14. Another example is our physical-virtual patient bed. These are patient simulators that, among other things, incorporate tactile feedback in several locations over the patient simulator to provide the sensation of a pulse at those points on the body, e.g., the neck, groin, wrists, and ankles. The strength and timing of the tactile feedback can be varied to simulate a strong or weak ("thready") pulse. This work has resulted in several publications, e.g., a 2020 article in the journal Simulation in Healthcare. (Salam Daher, Jason Hochreiter, Ryan Schubert, Laura Gonzalez, Juan Cendan, Mindi Anderson, Desiree A. Diaz, and Greg Welch, "The Physical-Virtual Patient Simulator: A Physical Human Form with Virtual Appearance and Behavior. Simulation in Healthcare," 15(2):115-121, 2020.) It has also resulted in three issued patents so far: U.S. Patent No. 10,410,541 ("Physical-Virtual Patient Bed") and U.S. Patent No. 9,679,500 ("Physical-Virtual Patient Bed"), both with Karen Aroian, Steven Talbert, Kelly Allred, Patricia Weinstein, Arjun Nagendran, and Remo Pillat; and U.S. Patent No. 10,380,921 ("Physical-Virtual Patient Bed System") with Arjun Nagendran, Mary Lou Sole, and Laura Gonzalez.

15. We have also incorporated environmental tactile feedback into various Virtual Reality or Augmented Reality simulations, e.g., to simulate the feeling of someone walking nearby, the dropping/landing of an object nearby, or the vibrations of a simulated moving platform. (Kendra Richards, Nikhil Mahalanobis, Kangsoo Kim, Ryan Schubert, Myungho Lee, Salam Daher, Nahal Norouzi, Jason Hochreiter,

Gerd Bruder, and Greg Welch, "Analysis of Peripheral Vision and Vibrotactile Feedback During Proximal Search Tasks with Dynamic Virtual Entities in Augmented Reality." In Proceedings of the ACM Symposium on Spatial User Interaction (SUI), page 9, New Orleans, LA, October 19 2019. Association of Computing Machinery, ACM; Myungho Lee, Gerd Bruder, Tobias Hollerer, and Greg Welch, "Effects of Unaugmented Periphery and Vibrotactile Feedback On Proxemics with Virtual Humans In AR." IEEE Transactions on Visualization and Computer Graphics, 24(4):1525-1534, April 2018; Myungho Lee, Gerd Bruder, and Greg Welch. Exploring the Effect of Vibrotactile Feedback Through the Floor on Social Presence in an Immersive Virtual Environment. Proceedings of IEEE Virtual Reality 2017, pages 105-111, March 2017; Myungho Lee, Gerd Bruder, and Greg Welch, "The Virtual Pole: Exploring Human Responses to Fear of Heights in Immersive Virtual Environments," Journal of Virtual Reality and Broadcasting, 14(2017)(6), 2019.)

16. My work related to embedded systems, input devices handling input and output signals, and associated event processing can be traced back to the 1980s, with my work on the "Easy Chair," a microprocessor-based user input and control system for a motorized wheelchair for children with Cerebral Palsy. Codeveloper James Williams and I received an "Outstanding Senior Design Project" award for the project in 1986. One of my core contributions to this wheelchair-related project

was the development of a novel customizable touch pad to be used by children to control their wheelchairs. The touch pad that combined analog and digital signals and control information associated with the pressure-sensitive hardware into a common data stream sent to a host through a common port. (James Williams and Greg Welch, "The pressure sensitive touch-pad," Purdue University, E.E.T. 454 Project Report, April 30, 1985.) We also developed an optical version of the touch pad that multiplexed LEDs and photo sensors to detect the intersection of a point on the touch pad. The control signals and touch results were communicated to a computer through a common port. (Greg Welch, "The infrared touch-pad," Purdue University, E.E.T. 421 Report, February 26, 1986.) We designed the Easy Chair controller and touchpad to emulate the joysticks of the original motorized wheelchair, i.e., to take over for them when in use, and to revert to the joystick control otherwise. We also developed safety controls, including speed and distance sensing and responses. For example, we developed "ultrasonic bumper" technology that slowed (or stopped) the wheelchair as it approached nearby objects. The complete functioning wheelchair, including touch pad, motor controls, safety sensors, and all user-interface aspects is described in our preliminary and final project reports. (Greg Welch and James P. Williams, "The easy chair: A microprocessor-controlled wheelchair for children with muscular disorders," Purdue University, E.E.T. 490/491 Senior Design Project, Preliminary Report, December

1985; Greg Welch and James P. Williams, The easy chair: A microprocessor-controlled wheelchair for children with muscular disorders, Purdue University, E.E.T. 490/491 Senior Design Project, Final Report, May 1986.)

II. LEGAL FRAMEWORK

17. I am a technical expert and do not offer any legal opinions. However, counsel has informed me as to certain legal principles regarding patentability and related matters under United States patent law, which I have applied in performing my analysis and arriving at my technical opinions in this matter.

18. I have been informed that claim terms are to be given the meaning they would have to a person having ordinary skill in the art at the time of the invention, taking into consideration the patent, its file history, and, secondarily, any applicable extrinsic evidence (e.g., dictionary definitions).

19. I have also been informed that the implicit or inherent disclosures of a prior art reference may anticipate the claimed invention. Specifically, if a person having ordinary skill in the art at the time of the invention would have known that the claimed subject matter is necessarily present in a prior art reference, then the prior art reference may "anticipate" the claim. Therefore, a claim is "anticipated" by the prior art if each and every limitation of the claim is found, either expressly or inherently, in a single item of prior art.

20. I have also been informed that a person cannot obtain a patent on an invention if the differences between the invention and the prior art are such that the subject matter as a whole would have been obvious at the time the invention was made to a person having ordinary skill in the art. I have been informed that a conclusion of obviousness may be founded upon more than a single item of prior art. I have been further informed that obviousness is determined by evaluating the following factors: (1) the scope and content of the prior art, (2) the differences between the prior art and the claim at issue, (3) the level of ordinary skill in the pertinent art, and (4) secondary considerations of non-obviousness. In addition, the obviousness inquiry should not be done in hindsight. Instead, the obviousness inquiry should be done through the eyes of a person having ordinary skill in the relevant art at the time the patent was filed.

21. In considering whether certain prior art renders a particular patent claim obvious, counsel has informed me that I can consider the scope and content of the prior art, including the fact that one of skill in the art would regularly look to the disclosures in patents, trade publications, journal articles, industry standards, product literature and documentation, texts describing competitive technologies, requests for comment published by standard setting organizations, and materials from industry conferences, as examples. I have been informed that for a prior art reference to be proper for use in an obviousness analysis, the reference must be

"analogous art" to the claimed invention. I have been informed that a reference is analogous art to the claimed invention if: (1) the reference is from the same field of endeavor as the claimed invention (even if it addresses a different problem); or (2) the reference is reasonably pertinent to the problem faced by the inventor (even if it is not in the same field of endeavor as the claimed invention). In order for a reference to be "reasonably pertinent" to the problem, it must logically have commended itself to an inventor's attention in considering his problem. In determining whether a reference is reasonably pertinent, one should consider the problem faced by the inventor, as reflected either explicitly or implicitly, in the specification. I believe that all of the references that my opinions in this IPR are based upon are well within the range of references a person having ordinary skill in the art would consult to address the type of problems described in the Challenged Claims.

22. I have been informed that, in order to establish that a claimed invention was obvious based on a combination of prior art elements, a clear articulation of the reason(s) why a claimed invention would have been obvious must be provided. Specifically, I am informed that a combination of multiple items of prior art renders a patent claim obvious when there was an apparent reason for one of ordinary skill in the art, at the time of the invention, to combine the prior art, which can include, but is not limited to, any of the following rationales: (A) combining prior art methods according to known methods to yield predictable results; (B) substituting one known

element for another to obtain predictable results; (C) using a known technique to improve a similar device in the same way; (D) applying a known technique to a known device ready for improvement to yield predictable results; (E) trying a finite number of identified, predictable potential solutions, with a reasonable expectation of success; (F) identifying that known work in one field of endeavor may prompt variations of it for use in either the same field or a different one based on design incentives or other market forces if the variations are predictable to one of ordinary skill in the art; or (G) identifying an explicit teaching, suggestion, or motivation in the prior art that would have led one of ordinary skill to modify the prior art reference or to combine the prior art references to arrive at the claimed invention.

23. I am informed that the existence of an explicit teaching, suggestion, or motivation to combine known elements of the prior art is a sufficient, but not a necessary, condition to a finding of obviousness. This so-called "teaching suggestion-motivation" test is not the exclusive test and is not to be applied rigidly in an obviousness analysis. In determining whether the subject matter of a patent claim is obvious, neither the particular motivation nor the avowed purpose of the patentee controls. Instead, the important consideration is the objective reach of the claim. In other words, if the claim extends to what is obvious, then the claim is invalid. I am further informed that the obviousness analysis often necessitates consideration of the interrelated teachings of multiple patents, the effects of demands

known to the technological community or present in the marketplace, and the background knowledge possessed by a person having ordinary skill in the art. All of these issues may be considered to determine whether there was an apparent reason to combine the known elements in the fashion claimed by the patent.

24. I also am informed that in conducting an obviousness analysis, a precise teaching directed to the specific subject matter of the challenged claim need not be sought out because it is appropriate to take account of the inferences and creative steps that a person of ordinary skill in the art would employ. The prior art considered can be directed to any need or problem known in the field of endeavor at the time of invention and can provide a reason for combining the elements of the prior art in the manner claimed. In other words, the prior art need not be directed towards solving the same specific problem as the problem addressed by the patent. Further, the individual prior art references themselves need not all be directed towards solving the same problem. I am informed that common sense is important and should be considered. Common sense teaches that familiar items may have obvious uses beyond their primary purposes.

25. I also am informed that the fact that a particular combination of prior art elements was "obvious to try" may indicate that the combination was obvious even if no one attempted the combination. If the combination was obvious to try (regardless of whether it was actually tried) or leads to anticipated success, then it is

likely the result of ordinary skill and common sense rather than innovation. I am further informed that in many fields it may be that there is little discussion of obvious techniques or combinations, and it often may be the case that market demand, rather than scientific literature or knowledge, will drive the design of an invention. I am informed that an invention that is a combination of prior art must do more than yield predictable results to be non-obvious.

26. I am informed that for a patent claim to be obvious, the claim must be obvious to a person of ordinary skill in the art at the time of the invention. I am informed that the factors to consider in determining the level of ordinary skill in the art include (1) the educational level and experience of people working in the field at the time the invention was made, (2) the types of problems faced in the art and the solutions found to those problems, and (3) the sophistication of the technology in the field.

27. I am informed that it is improper to combine references where the references teach away from their combination. I am informed that a reference may be said to teach away when a person of ordinary skill in the relevant art, upon reading the reference, would be discouraged from following the path set out in the reference, or would be led in a direction divergent from the path that was taken by the patent applicant. In general, a reference will teach away if it suggests that the line of development flowing from the reference's disclosure is unlikely to be productive of

the result sought by the patentee. I am informed that a reference teaches away, for example, if (1) the combination would produce a seemingly inoperative device, or (2) the references leave the impression that the product would not have the property sought by the patentee. I also am informed, however, that a reference does not teach away if it merely expresses a general preference for an alternative invention but does not criticize, discredit, or otherwise discourage investigation into the invention claimed.

28. I am informed that the final determination of obviousness must also consider "secondary considerations" if presented. In most instances, the patentee raises these secondary considerations of non-obviousness. In that context, the patentee argues an invention would not have been obvious in view of these considerations, which include: (a) commercial success of a product due to the merits of the claimed invention; (b) a long-felt, but unsatisfied need for the invention; (c) failure of others to find the solution provided by the claimed invention; (d) deliberate copying of the invention by others; (e) unexpected results achieved by the invention; (f) praise of the invention by others skilled in the art; (g) lack of independent simultaneous invention within a comparatively short space of time; (h) teaching away from the invention in the prior art.

29. I am further informed that secondary considerations evidence is only relevant if the offering party establishes a connection, or nexus, between the

evidence and the claimed invention. The nexus cannot be based on prior art features. The establishment of a nexus is a question of fact. While I understand that the Patent Owner here has not offered any secondary considerations at this time, I will supplement my opinions if the Patent Owner raises secondary considerations during this proceeding.

III. OPINION

A. Overview of the ’081 Patent

30. The ’081 Patent acknowledges that “[v]ibration-inducing motors and mechanisms have been used for many years in a wide variety of different consumer appliances, toys, and other devices and systems.” *’081 Patent* at 1:24-26. However, “[t]he most common electro-mechanical system used for generating vibrations is an intentionally unbalanced electric motor.” *Id.* at 1:30-32. According to the ’081 Patent, “there are many problems associated with the unbalanced-electric-motor vibration-generating units … commonly used in the various devices, systems, and applications discussed above.” *Id.* at 2:12-16. For example, “unbalancing the shaft of an electric motor not only produces useful vibrations that can be harnessed for various applications, but also produces destructive, unbalanced forces within the motor that contribute to rapid deterioration of motor parts.” *Id.* at 2:16-20. Because of this, “[t]he useful lifetimes of many devices and appliances, particularly hand-held devices and appliances, that employ unbalanced electric motors for generating

vibrations may range from a few tens of hours to a few thousands of hours of use, after which the vibrational amplitude produced by the devices declines precipitously as the electric motor and other parts deteriorate." *Id.* at 2:25-31.

31. According to the '081 Patent, an additional problem with "unbalanced electric motors is that they are relatively inefficient at producing vibrational motion" in that "[a] far greater amount of power is consumed by an unbalanced electrical motor to produce a given vibrational force than the theoretical minimum power required to produce the given vibrational force." *Id.* at 2:32-37. "As a result, many hand-held devices that employ unbalanced electric motors for generating vibrations quickly consume batteries during use." *Id.* at 2:37-39.

32. Motivated by these and other problems, the '081 Patent "is directed to various linear vibration modules ('LRMs'), including various types of linear-resonant vibration modules ('LRVMs'), that can be used within a wide variety of different types of appliances, devices, and systems, to generate vibrational forces." *Id.* at 4:13-17. "The LVMs and LRVMs that represent embodiments of the current application are linear in the sense that the vibrational forces are produced by a linear oscillation of a weight or component within the LVM or LRVM, rather than as a by-product of an unbalanced rotation, as in the case of currently employed unbalanced electric motors." *Id.* at 4:17-23.

33. "The LRVM includes a cylindrical housing 402 within which a solid, cylindrical mass 404, or weight, can move linearly along the inner, hollow, cylindrically shaped chamber 406 within the cylindrical housing or tube 402." *Id.* at 4:49-52. As shown in Figure 4A, the weight/mass 404 is a magnet whose polarities match the polarities of magnetic disks 414/416 located on opposite ends of the cylindrical housing 402:

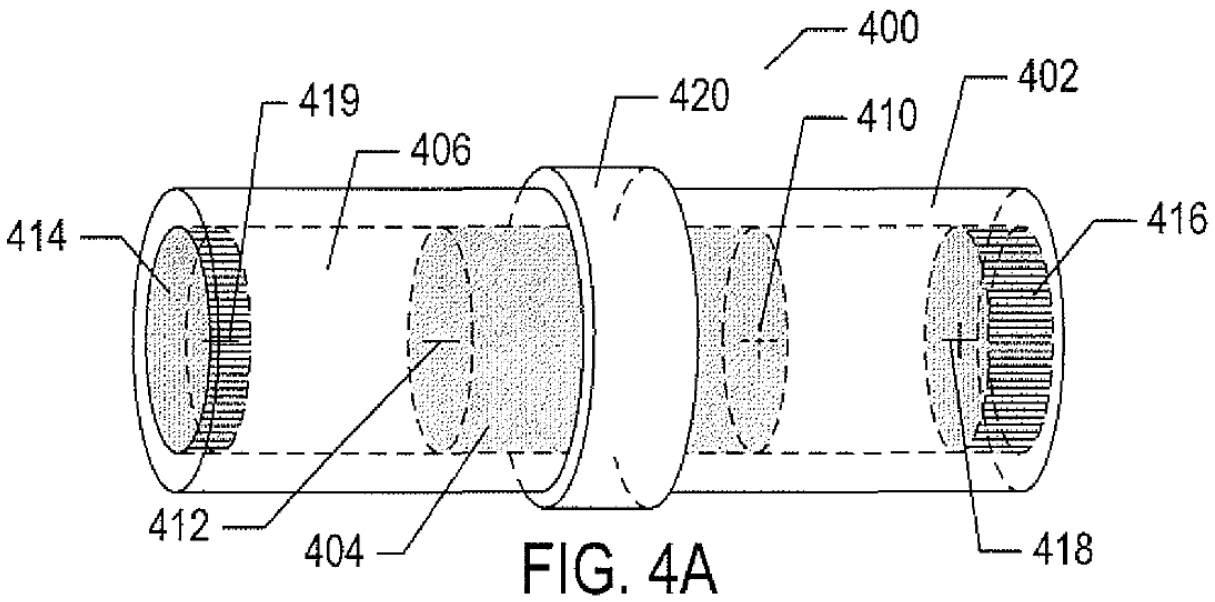

FIG. 4A

Id. at Fig. 4A.

34. In other words, the left side of magnet 404 has a negative polarity 412, which is the same polarity as the left disk 414, and the right side of magnet 404 has a positive polarity 410, which is the same polarity as the right disk 416. "The disk-like magnets 414 and 418 [sic] are magnetically oriented opposite from the magnetic orientation of the weight 404, so that when the weight moves to either the extreme

left or extreme right sides of the cylindrical chamber, the weight is repelled by one of the disk-like magnets at the left or right ends of the cylindrical chamber." *Id.* at 4:59-65. However, the '081 Patent also describes an alternative embodiment where mechanical springs are used instead of magnetic disks 414/416. *Id.* at 9:11-18, Fig. 10.

35. As shown in Figure 4B, applying an electric current to coil 420 in a first direction causes "a corresponding magnetic force 424 [to be] generated in a direction parallel to the axis of the cylindrical chamber, which accelerates the weight 404 in the direction of the magnetic force 424." *Id.* at 5:6-10.

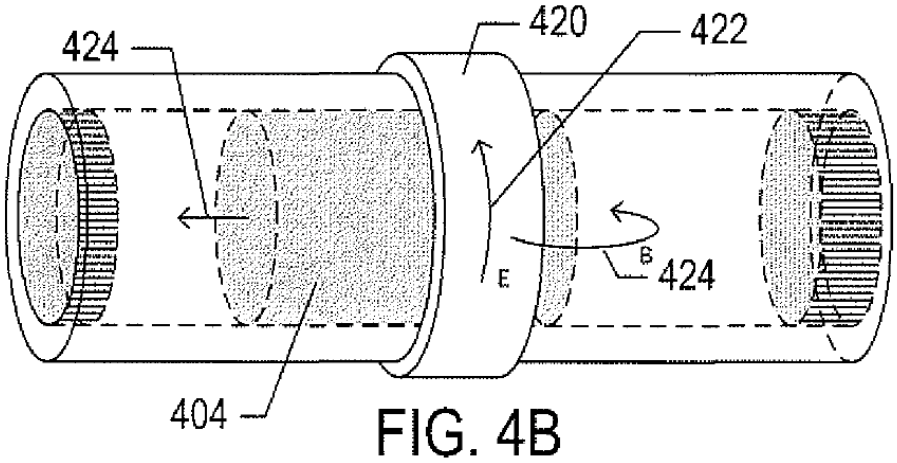

FIG. 4B

Id. at Fig. 4B.

36. As shown in Figure 4C, "[w]hen the weight reaches a point at or close to the corresponding disk-like magnet 414 … a magnetic force due to the repulsion of the disk-like magnet 414 and the weight 404, 426, is generated in the opposite direction, decelerating the weight and reversing its direction." *Id.* at 5:10-15.

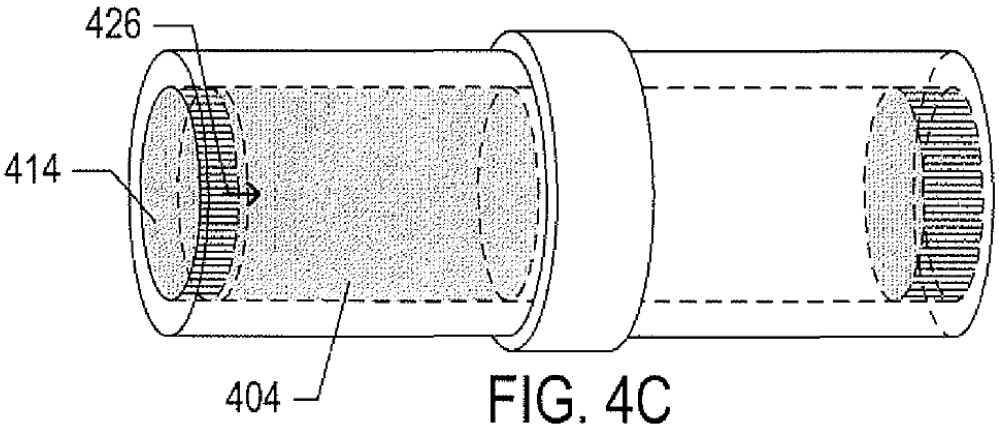

FIG. 4C

Id. at Fig. 4C.

37. "As the weight reverses direction, as shown in FIG. 4D, current is applied in an opposite direction 430 to the coil 420, producing a magnetic force 432 in an opposite direction from the direction of the magnetic force shown in FIG. 4B, which accelerates the weight 404 in a direction opposite to the direction in which the weight is accelerated in FIG. 4B." *Id.* at 5:15-20.

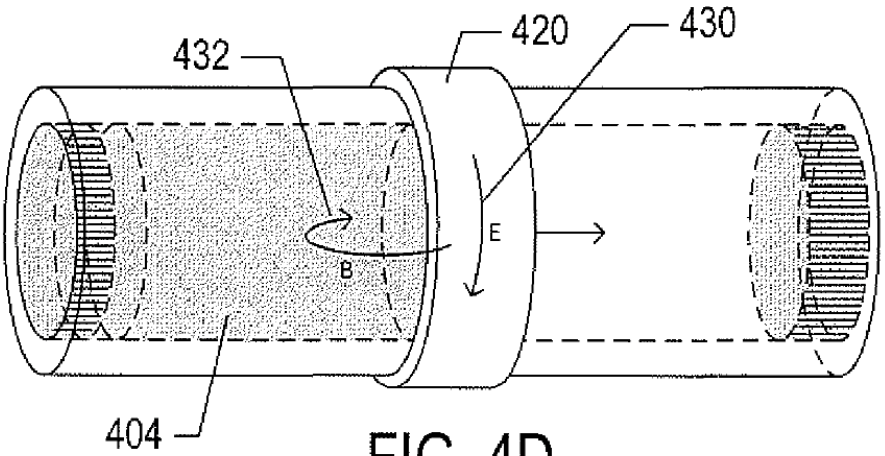

FIG. 4D

Id. at Fig. 4D.

38. "Thus, by a combination of a magnetic field with rapidly reversing polarity, generated by alternating the direction of current applied to the coil, and by the repulsive forces between the weight magnet and the disk-like magnets at each end of the hollow, cylindrical chamber, the weight linearly oscillates back and forth within the cylindrical housing 402, imparting a directional force at the ends of the cylindrical chamber with each reversal in direction." *Id.* at 5:27-34. According to the '081 Patent, "the amplitude of the vibration and vibrational forces produced are related to the length of the hollow chamber in which the weight oscillates, the current applied to the coil, the mass of the weight, the acceleration of the weight produced by the coil, and the mass of the entire LRVM." *Id.* at 5:35-39. Likewise, "[t]he frequency of the oscillation of the solid, cylindrical mass is determined by the frequency at which the direction of the current applied to the coil is changed." *Id.* at 5:43-45.

39. "FIG. 6 provides a block diagram of the LRVM, illustrated in FIGS. 4A-G, that represents one implementation of the linear-resonant vibration module to which current application is directed." *Id.* at 5:66-6:2. "[T]he LRVM 600 is controlled by a control program executed by the CPU microprocessor 602" and "receives inputs from the user controls 606 that together comprise a user interface." *Id.* at 6:11-12, 6:17-19. "These controls may include any of various dials, pushbuttons, switches, or other electromechanical-control devices," including, for

example, "a dial to select a strength of vibration, which corresponds to the current applied to the coil, a switch to select one of various different operational modes, and a power button." *Id.* at 6:19-24.

40. "A power supply 612 provides power, as needed, to user controls 614, to the CPU 616 and optional, associated memory, to the H-bridge switch 618, and, when needed, to one or more sensors 632." *Id.* at 6:25-29. "The H-bridge switch 620 receives a control-signal input d 622 from the CPU," and "[t]he power supply 612 receives a control input 624 from the CPU to control the current supplied to the H-bridge switch 618 for transfer to the coil 626." *Id.* at 6:32-35.

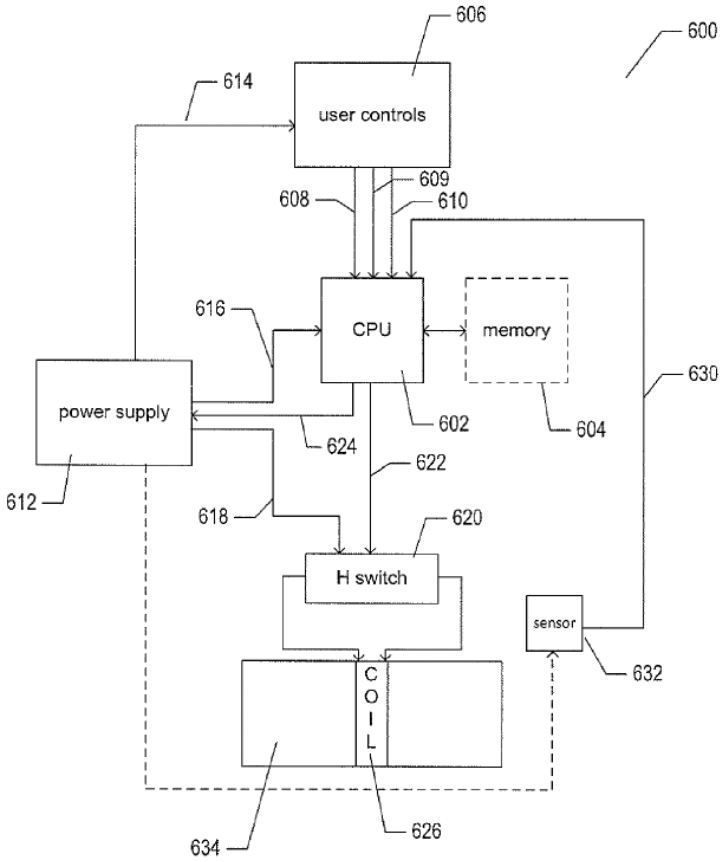

Id. at Fig. 6.

41. Figure 7A illustrates a high-level control program executed by the CPU. *Id.* at 6:43-48. After the device is powered on, "various local variables are set to default values, including the variables: (1) mode, which indicates the current operational mode of the device; (2) strength, a numerical value corresponding to the current user-selected strength of operation, corresponding to the electrical current applied to the coil; (3) lvl0, a previously sensed vibrational strength; (4) lvl1, a currently sensed vibrational strength; (5) freq, the current frequency at which the direction of current is alternated in the coil; (6) d, the control output to the H-bridge switch; and (7) inc, a Boolean value that indicates that the frequency is currently being increased." *Id.* at 6:48-61.

42. As noted above, the '081 Patent states that the amplitudes of the vibrational forces generated by the LRVM are related to the current applied to the coil, among other things. *Id.* at 5:35-39. Since the "strength" variable corresponds to the electrical current applied to the coil, a person having ordinary skill in the art would understand that the "strength" variable allows the user to control the vibrational amplitude of the LRVM. *Id.* at 6:53-55 ("strength, a numerical value corresponding to the current user-selected strength of operation, corresponding to the electrical current applied to the coil").

43. In step 704, the high-level control program monitors the system for certain events. *Id.* at 6:61-65. When a frequency timer expiration event occurs in step 706, for example, "the value of the output signal d is flipped, in step 708, and output to the H-bridge switch, with the frequency timer being reset to trigger a next frequency-related event." *Id.* at 7:13-17. "The frequency-timer interval is determined by the current value of the variable freq." *Id.* at 7:17-18.

44. The amount of current supplied to the coil affects the acceleration of the weight in either direction. *Id*. at 5:5-42 ("When an electric current is applied to the coil 420 in a first direction 422, a corresponding magnetic force 424 is generated in a direction parallel to the axis of the cylindrical chamber, which accelerates the weight 404 in the direction of the magnetic force 424."). Changes in the current, and hence the acceleration of the weight, can be used to affect both or either of the amplitude and the frequency. For example, higher acceleration can be used to achieve a higher amplitude vibration with the same frequency, or the same amplitude vibration with a higher frequency.

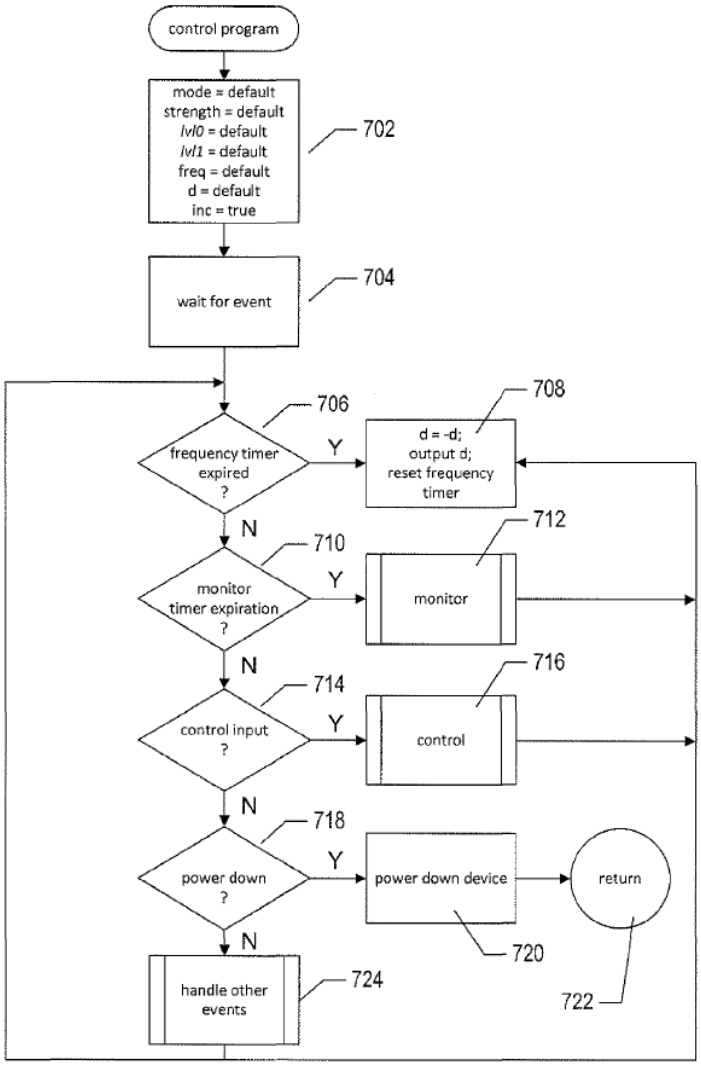

Id. at Fig. 7A.

45. "FIG. 7C provides a control-flow diagram for the routine 'control,' called in step 716 in FIG. 7A," which "is invoked when a change in the user controls has occurred." *Id.* at 8:10-12. "In step 760, the variables mode and strength are set to the currently selected mode and vibrational strength, represented by the current states of control features in the user interface." *Id.* at 8:12-15. "[I]n step 762, the routine 'control' computes an output value p corresponding to the currently selected

strength, stored in the variable strength, and outputs the value p to the power supply so that the power supply outputs an appropriate current to the coil." *Id.* at 8:16-20.

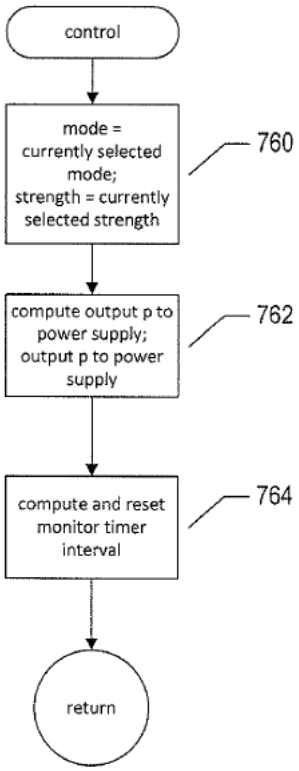

Id. at Fig. 7C.

46. Thus, the CPU controls the amplitude of vibration via the signal p output to the power supply, and it controls the frequency of vibration by switching the direction of signal d output to the H-bridge circuit based on the frequency timer.

47. The '081 Patent also describes "interesting vibrational modes produced by driving a linear-resonant vibration module simultaneously at two different frequencies." *Id.* at 13:14-16. For example, Figure 22B "illustrates a vibration mode of the linear vibration module driven at a primary operational frequency of 25 Hz

with an added modulating 1 Hz operational frequency," which "produces low-frequency pulses of high-frequency vibration." *Id.* at 13:23-28.

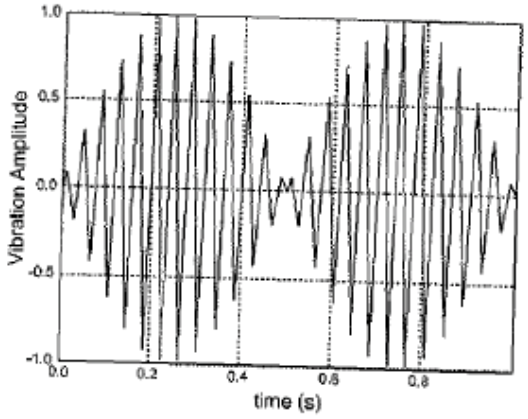

Id. at Fig. 22B.

48. As another example, Figure 23 "illustrates a different complex vibrational mode in which two driving frequencies combine to produce a lower-frequency beat-wave form," which "is produced by a primary driving frequency of 25 Hz, as in FIG. 22A, with a second driving frequency of 20 Hz." *Id.* at 13:29-33.

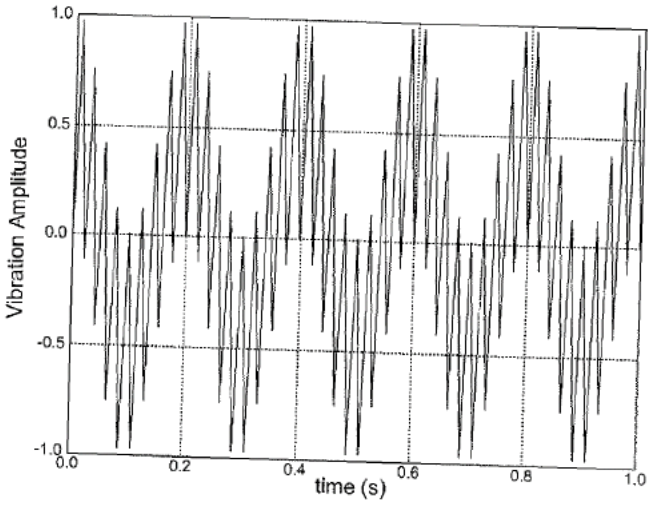

Id. at Fig. 23.

49. The ’081 Patent also discloses that “[b]y varying the number, relative amplitudes, and frequencies of two or more driving signals, a microprocessor-controlled or microcontroller-controlled linear-resonance vibration module can be controlled to produce any number of complex vibrational patterns and modes, including periodic modes, modes with multiple different periods, various modulated vibration modes, and even fully a periodic vibration modes that do not repeat time.” *Id.* at 13:34-41.

B. <u>Field of Endeavor of the ’081 Patent</u>

50. I have been informed that the field of endeavor of the claimed invention can be determined by reference to explanations of the invention’s subject matter in the patent application, including the embodiments, function, and structure of the claimed invention.

51. The ’081 Patent defines the “Technical Field of the Invention” as “related to vibration-generating devices and, in particular, to vibration modules that can be incorporated into a wide variety of different types of electromechanical devices and systems to produce vibrations of selected amplitudes and frequencies over a wide range of amplitude/frequency space.” *’081 Patent* at 1:15-20. More specifically, the ’081 Patent describes using linear vibration modules “within a wide variety of different types of appliances, devices, and systems, to generate vibrational

forces." *Id.* at 4:13-17. Per the '081 Patent, the linear vibration module (LVM) is "linear in the sense that the vibrational forces are produced by a linear oscillation of a weight or component within the LVM or LRVM, rather than as a by-product of an unbalanced rotation, as in the case of currently employed unbalanced electric motors." *Id*. at 4:17-23. The Challenged Claims are directed to "[a] linear vibration module." *See* Claim 1[P]. Therefore, the field of endeavor of the '081 Patent at least includes linear vibration modules.

C. **Background of the Prior Art**

52. I was asked to briefly summarize the background of the prior art from the standpoint of a person having ordinary skills in the art prior to May 18, 2009. As explained below, the linear actuators described by the '081 Patent were well-known and conventional prior to the invention of the '081 Patent.

1. *Foundational Principles of Electricity and Magnetism*

53. I have provided a brief overview of the basic principles of electricity and magnetism in which the actuators described by the '081 Patent rely.

54. Electric potential is a measure of energy per unit charge and is measured in volts (V). *See e.g., Serway* at 644 ("Because potential is a measure of energy per unit charge, the SI units of potential are joules per coulomb, called the volt (V)[.]"). A difference in potential, i.e., a potential difference, exerts an electric pressure on electrons in a circuit that causes them to flow. *See e.g., Miller* at 16 ("It

is actually electric pressure exerted on electrons in a circuit. A circuit is a pathway for the movement of electrons. An external force exerted on electrons to make them flow through a conductor is known as electromotive force, or emf. It is measured in volts. Electric pressure, potential difference, and emf mean the same thing.”).

55. An electrical current is measured in amperes and is the rate at which electric charge, or electrons, flows through a conductor. *See e.g., Serway* at 684 (“Whenever a charge is flowing, an electric current is said to exist…. The current is defined as the rate at which electric charge flows through this surface.”); *Miller* at 29 (“Current flow is the flow of electrons along a conductor.”). Thus, average electric current, I_{avg}, is described mathematically as the amount of charge, ΔQ, that passes through an area in a time interval, Δt, which means that instantaneous current is given by the following expression:

$$I = \frac{dQ}{dt}$$

Serway at 684.

56. An alternating current (AC) is when the current changes its direction of flow as it flows through a conductor, such as a wire. *Miller* at 35 (“Alternating current changes its direction of flow as it moves along a wire. It flows in one direction and then the other”).

57. An alternating current constantly changes in magnitude and direction. *See e.g., Miller* at 36 (“Alternating current is constantly changing. It changes in

magnitude and direction."). As shown below, an alternating current is typically a sinusoidal waveform that alternates between positive and negative amplitudes over time where the maximum point on the waveform is the peak amplitude value:

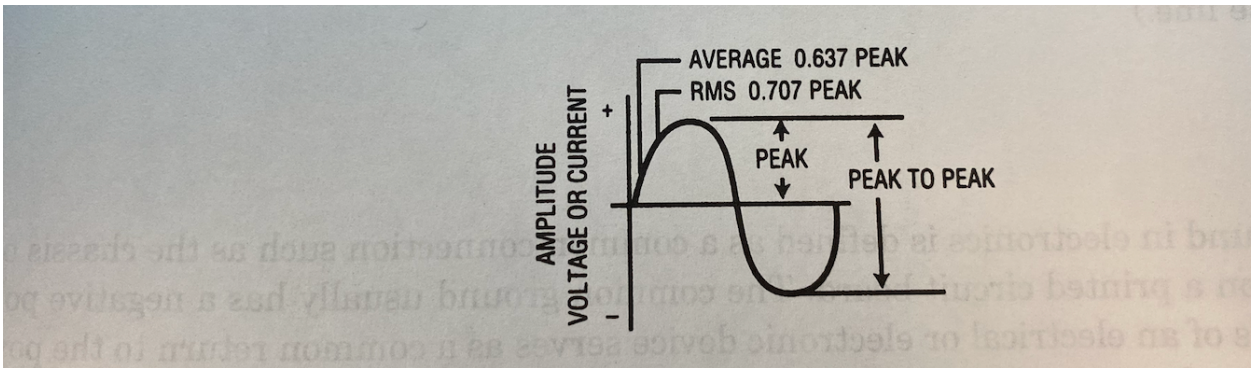

Figure 3-8. Ac sine wave values.

Id. at 37.

58. The frequency of the waveform indicates how many times the alternating current changes direction and is expressed in units of cycles per second or Hz. *Id.* at 36 ("The term *frequency* is used to indicate how many times the alternating current changes direction. The ac you use at home changes direction 60 times per second…This current is described as having a frequency of 60 Hz.") (emphasis in original).

59. Electricity and magnetism are connected. For example, changing an electric field produces a magnetic field and vice versa. *See e.g., Serway* at 728 ("They showed that an electric current could be produced in a circuit either by moving a magnet near the circuit or by changing the current in a nearby circuit. Their observations demonstrated that a changing magnetic field produces an electric field.

Years later, theoretical work by James Clerk Maxwell showed that the reverse is also true: changing electric field gives rise to a magnetic field.”).

60. An electromagnet is “[a] magnet that has a field that is produced by an electric current through a coil of wire.” *Miller* at 412. Such a coil of wire is also referred to as a solenoid. *See e.g., Serway* at 750 (“A solenoid is a long wire wound in the form of a helix.”). “If the turns are closely spaced, this configuration can produce a reasonably uniform magnetic field” in the presence of a current. *Id.* As shown in the figures below, the magnetic field of the solenoid is similar to that of a permanent bar magnet:

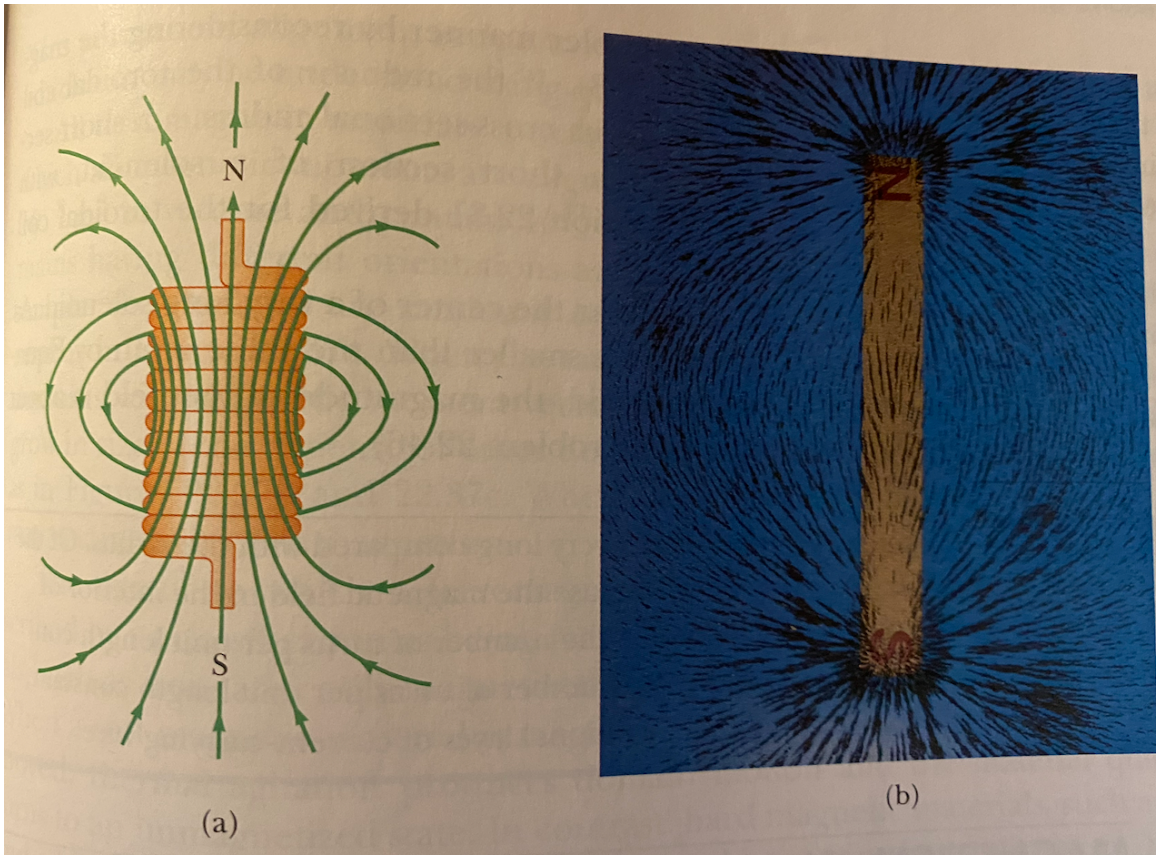

Id. at 751.

2. *Overview of Voice-Coil Actuators*

61. An actuator is well-known in the art as a device that converts electrical energy into mechanical motion. *See e.g., Glossary* at 3 (defining "actuator" as "A device that converts an electrical signal into mechanical motion."). There are many different types of actuators. However, given the subject matter of the '081 Patent, I will focus on linear voice-coil actuators.

62. The name "voice-coil" derives from the fact that these actuators were "[o]riginally used in radio loud speakers." *Black* at 44; *see also, Chai* at 164 ("The name 'voice-coil motor' was coined because the inventors got the idea for this motor from audio speakers."). "Voice-coil actuators are direct drive, limited motion devices that use a permanent magnet field and a coil winding (conductor) to produce a force proportional to the current applied to the coil." *Black* at 44. "The electromechanical conversion mechanism of a voice coil actuator is governed by the Lorentz Force Principle," which states, "if a current-carrying conductor is placed in a magnetic field, a force will act upon it." *Id.* The magnitude of the force is a function of the magnetic flux density, the length of the conductor, and the current flowing through the conductor. *Id.* In a voice coil actuator, the magnetic field and length of the conductor are constant, so "the generated force is directly proportional to the input current." *Id.*

63. The direction of the force is a function of the direction of the current. For example, the following simplified figure illustrates the direction of the force, F, which is the cross-product of the current and magnetic field vectors:

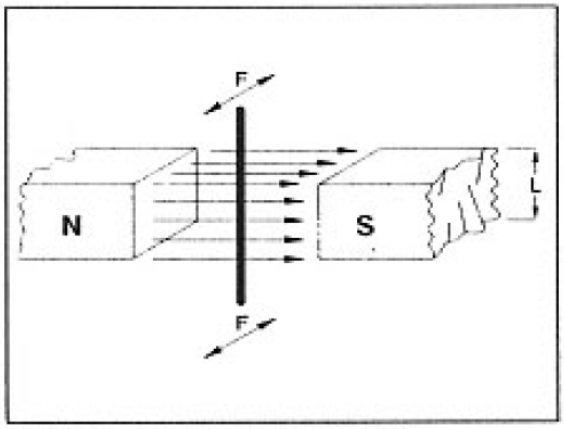

Figure 1. *Lorentz Force Principle.*

Id. If the direction of the current is reversed, then "the direction of the force on the conductor will also reverse." *Id.*

64. Voice-coil actuators can be linear or rotary. *Id.* ("These non-commutated electromagnetic devices are used in linear and rotary motion applications requiring linear force or torque output…"); *see also, Chai* at 164 ("There are two types of voice-coil motors. One is called a linear vcm since it gives a motion in a straight line. The other is called a rotary vcm since its motion makes an arc.").

65. "In its simplest form, a linear voice coil actuator is a tubular coil of wire situated within a radially oriented magnetic field, as shown in *Figure 2*." *Black* at 44 (emphasis in original). As shown in the figure below, "the magnetic field is produced

by permanent magnets embedded on the inside diameter of a ferromagnetic cylinder, arranged so that the magnets 'facing' the coil are all of the same polarity." *Id.* "The force generated axially upon the coil when current flows through the coil will produce relative motion between the field assembly and the coil[.]" *Id.* at 45.

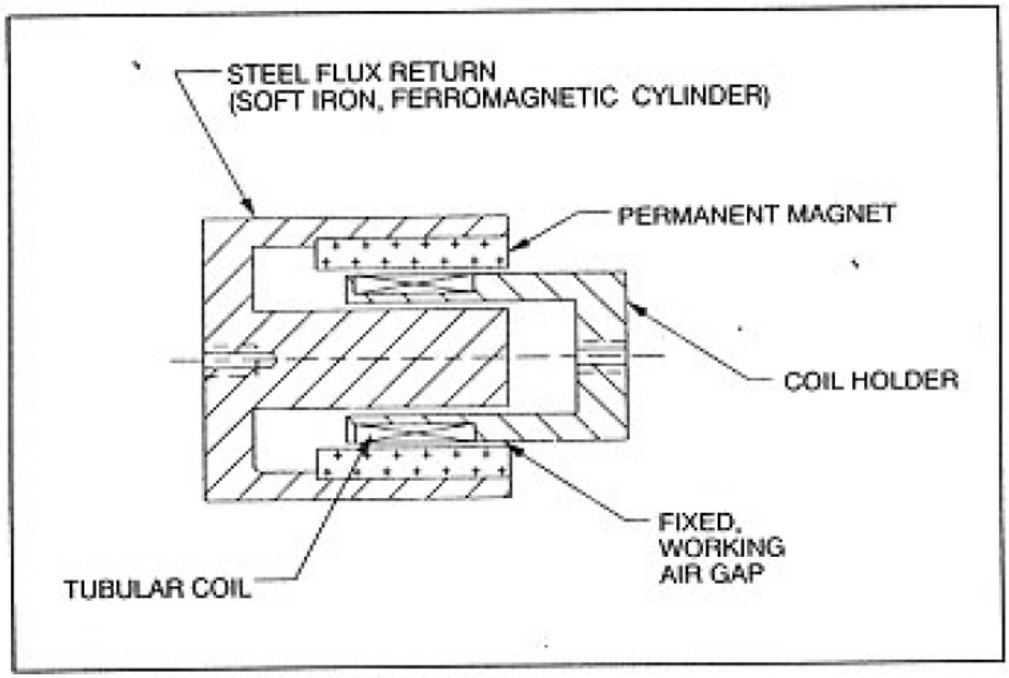

Figure 2. *Linear Voice Coil Actuator.*

Id.

66. This type of voice coil actuator is known as a "moving coil" actuator. *See e.g., Chai* at 164 (A voice-coil motor "consists of a movable coil in a gap and a magnet that provides a dc magnetic field in the gap. When a current flows in the coil, the coil experiences force (Lorentz force), resulting in motion.").

67. Another type of voice coil actuator is a "moving magnet" actuator. The difference between a moving magnet actuator and a moving coil actuator is the

component that is displaced by the Lorentz force. For example, in a moving coil voice coil, "current flows in the coil, the coil experiences force (Lorentz force), resulting in motion." *Chai* at 164. Conversely, in a moving magnet voice coil, "[t]he magnet head is moved in a degree of freedom based on an electromagnetic force caused by a current flowed through the coil." *Shahoian* at 2:12-16.

68. For example, Shahoian proposes a linear moving magnet actuator 100 "included in a handheld controller 14 … for providing force feedback to the user of the controller 14[.]" *Id.* at 6:3-8; *see also, id.* at 2:9-11 ("More specifically, the present invention relates to an actuator for providing vibration forces in a haptic feedback device."). "Actuator 100 is a moving-magnet actuator in which a grounded metal core 102 includes a wire coil 104 that is wrapped around a central projection of the core as shown (shown in cross section in FIG. 2)." *Id.* at 6:14-17. "A magnet head 105 includes two magnets 106 and 108 which have opposite polarities facing the coil 104 and are coupled together as shown and spaced from coil 104 and core 102." *Id.* at 6:17-20. "A plastic housing 112 provides a structure for the magnets and metal piece of the magnet head 105." *Id.* at 6:23-25. "The actuator 100 operates by producing a force on the magnet head 105 in the linear directions indicated by arrows 114 when a current is flowed through the coil 104." *Id.* at 6:26-28.

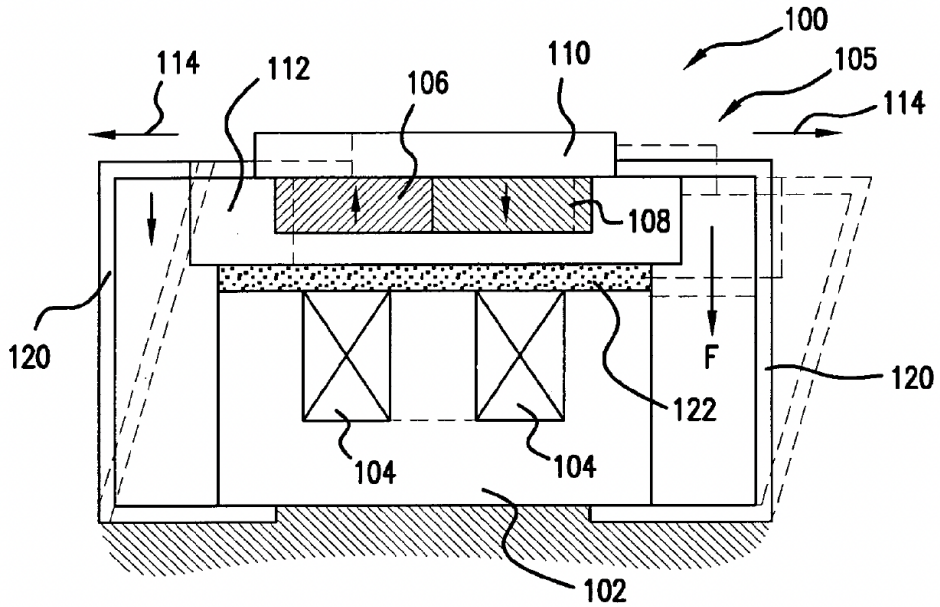

FIG.2

Id. at Fig. 2.

69. Per Shahoian, the actuator is controlled by a local microprocessor 26 that "provide[s] signals to actuators 30 of the interface device 14 in accordance with instructions provided by host computer 12 over bus 24." *Id.* at 4:31-34; *see also, id.* at Fig. 1. "Power supply 40 can optionally be coupled to the actuator interface 38 and/or actuators 30 to provide electrical power." *Id.* at 5:35-37.

70. Thus, Shahoian, which was filed on June 30, 2000, demonstrates that linear vibration modules, including housings, moveable magnets, power supplies, driving electromagnetic coils, and local microprocessors, were well known prior to the '081 Patent.

71. Indeed, the use of moving magnet actuators, such as described by Shahoian, increased after the introduction of neodymium magnets in the 1980s. *See*

e.g., Lequesne at 161 ("The introduction of the more powerful Neodymium-Iron-Boron magnets….makes it conceivable to construct the motor with moving magnets, rather than a moving coil, without paying an insurmountable penalty in terms of inertia."); *Chai* at 185 ("With the introduction of high-energy product rare-earth cobalt magnets and especially neodymium magnets in the early 1980s, later vcm designs made use of circuits 3 and 4."). Moving magnet actuators were considered superior to moving coil actuators due to the "fragility of the moving coil connection," which limits "both the possible range of motion and harshness of the environment in which they could be used." *Lequesne* at 161. Because moving magnet actuators did not require a connection between the moving magnet and the power source, these types of actuators were known to be "more rugged and less expensive construction capable of longer strokes and of applications in harsher environments[.]" *Id.* Further, the "required volume of the permanent magnet (PM) in the moving magnet configuration is much smaller than that needed by the moving coil configuration of same power output and efficiency." *Chen* at 457.

3. *Applications of Voice-Coil Actuators*

72. Actuators have a variety of different applications. For example, linear electric actuators are used in "compressors, pumps, electromagnetic valve actuators, active shock absorbers, **vibrators**, etc." *Boldea* at Abstract (emphasis added). As another example, voice coil actuators "are used in linear and rotary motion

applications requiring linear force or torque output, and high acceleration, or high frequency actuation." *Black* at 44. Further, linear oscillatory actuators (LOAs) "are usually single-phase and provide sustained short-stroke reciprocating motion … at a controlled frequency and amplitude. They are being employed extensively in applications such as pumps, compressors, and vibrators." *Zhu* at 3855.

73. Voice-coil actuators have been used for decades to provide vibratory feedback to users. In 1990, for example, voice coils were used "to provide vibrations at the fingertips of a user wearing a Dextrous Hand Master Exoskeleton." *Berkley* at 1. "A hopeful design employed a single vibrating voice coil for each finger. Voice coils can produce relatively large-displacement vibrations without mechanical amplification, and do not consume much power in the process. They are light, relatively small, and their vibratory output cannot interfere with the low-frequency hand measurement performed by the DHM [Dextrous Hand Master]." *Id*.

4. *Vibrational Feedback and User Preferences*

74. It has also been long recognized that computing devices need to provide the appropriate system feedback in response to user inputs in order "to guide, reassure, inform and, if necessary, correct users' errors." *Preece* at 212-213. System feedback includes visual, auditory, and tactile feedback:

> This feedback can take various forms. It can be a visual display on a screen: a piece of text appears, an icon expands into a window, a cursor moves across the screen or a complete change of screen presentation

> occurs. It can be auditory: an alarm warning, a spoken comment or some other audible clue such as the sound of keys clicking when hit. It can be tactile" the feel of a button being depressed, or a change in pressure, such as occurs when using a joystick. In many cases feedback from input can be a combination of visual, auditory and tactile responses. For example, when selecting an icon on a screen, the tactile feedback from the mouse button or function keys will tell the users that they instructed the system to activate the icon. Simultaneously, visual feedback will show the icon changing shape on the screen. This is coordinated with the sound of the button clicking or the feel of the key resisting further pressure.

Id. at 213.

75. "[T]actile feedback is often referred to as *haptics* and is crucial for us to interact with our physical environment." *Poupyrev* at 1 (emphasis in original). "The importance of tactile feedback has been recognized in many fields from virtual reality to design of consumer electronics[.]" *Id.* "Tactile feedback also provides superior temporary discrimination, e.g., when rapidly successive data needs to be resolved, the feel of touch is about five times faster than vision." *Id.*

76. Vibrational feedback was known to be an important component of haptic/tactile feedback. "Humans can discriminate a vast range of intensities of tactile stimulus. Given appropriate conditions, the palm of a hand can feel vibratory stimulus with an amplitude as low as 0.2 microns." *Id.* at 2-3. "The vibration frequency has a profound effect on tactile perception. For example, single tactile

pulses, or taps, are perceived differently from the sinusoidal vibration, because different [cutaneous] receptors respond to these patterns." *Id.* at 3.

77. Given humans' ability to rapidly discern a wide variety of vibrational stimuli, it is no wonder that video games have incorporated vibrational feedback since the 1970s. "In 1976, Fonz…from Sega was the first arcade game to feature vibrotactile feedback. It allowed each player to feel the rumble of a motorcycle when it crashed into another player's bike on the screen." *Teslasuit* at 2.

78. Video game consoles began to include vibratory feedback in the 1990s. "In 1997, N64 Rumble Pak, unveiled by Nintendo, featured vibrotactile feedback." *Id*. at 3. The N64 Rumble Pak was an accessory that would connect to an N64 controller as shown below:

Watts at 2; *see also, id.* ("The Rumble Pak — which was released across world in 1997 for the Nintendo 64 — may be a small device that clips into the bottom of everyone's favourite three-pronged controller, but the role it played in shaping the was considerable. What was at the time a novel and perhaps gimmicky force-feedback add-on for the system soon became an industry-wide standard.").

79. That same year (1997) Microsoft released the Sidewinder Force Feedback Pro controller for PC games, and Sony released the DualShock controller for the PlayStation. *Teslasuit* at 3-4. The DualShock controller is an analog controller "exclusively for use with the PlayStation ® (PS one ™), PlayStation ®, or PlayStation ® 2 console." *DualShock Manual* at 1. As shown below, the DualShock included a variety of buttons and two analog joysticks for user inputs:

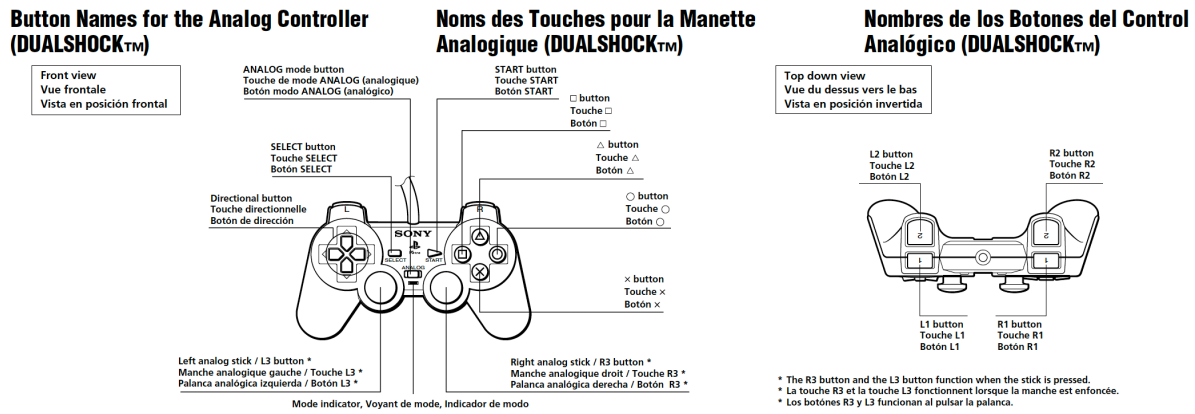

Id. at 2.

80. At this time, mass-market video games also began to incorporate vibratory feedback. One example was *Star Fox 64*, which if used with the Rumble Pak accessory connected to the controller, would allow the user to "feel different

degrees of vibrations" when the spaceship is hit during the game. *Star Fox 64 Instruction Booklet* at 25.

81. Different genres of games took advantage of vibratory feedback in different ways. In addition to *Star Fox 64*, discussed above, *Gran Turismo 2* was a racing game that would cause the DualShock to vibrate when the user would "skid the tires, hit other cars or objects, or even accelerate with a hard-running engine." *Culbert* at 22. Another example was *GoldenEye 007*, which was a first-person shooter game that would generate different types of vibrations in the N64 Rumble Pak depending on the type of gun the user was firing. *Watts* at 4 ("Adding a Rumble Pak to the mix made such moments even more epic. Whether it was the sudden recoil after firing your PP7 or the continuous judder of an RCP-90, firing a virtual gun had never felt so good up until this point in time.").

82. As vibrational feedback become more pervasive, users were also able to customize the feedback to suit their preferences. For example, the Logitech iFeel Mouse, which was released in 2001 and included a linear moving mass actuator, also included software installed on the host computer that allowed the user to customize the vibration patterns associated with various events. *Dan's Data* at 1. ("The software that makes the iFeel mouses do something when you're doing normal Windows tasks is called Immersion Desktop… you can get feedback whenever the mouse moves onto a clickable thing on the screen[.]"); *Tierling* at [0005] ("Other

devices, such as the I-Feel Mouse from Logitech Corp., provide inertial vibrations using a linearly-moving mass.”).

83. The Logitech iFeel Mouse “translates your onscreen actions into tactile cues….when the mouse cursor passes over a certain icon or action bar, the mouse responds by producing a slight vibration.” *Butts* at 1. The user can also change the pattern, strength, and timing of vibrations. *Id*. (“The quality of the vibration can be adjusted to produce a range of sensations – rubbery, crisp, metallic, steely, and so on….The strength and timing of each sensation is completely customizable as well.”) As depicted in the figure below, the Logitech iFeel Mouse software allows the user to set the period of vibration, which is inversely proportional to the frequency of vibration. *See e.g., Serway* at 404 (“The period is equal to the inverse of the frequency[.]”). Thus, selecting the period allows users to change the frequency of vibration. As further depicted in the figure below, the Logitech iFeel Mouse software allows the user to set the strength and/or magnitude of vibration:

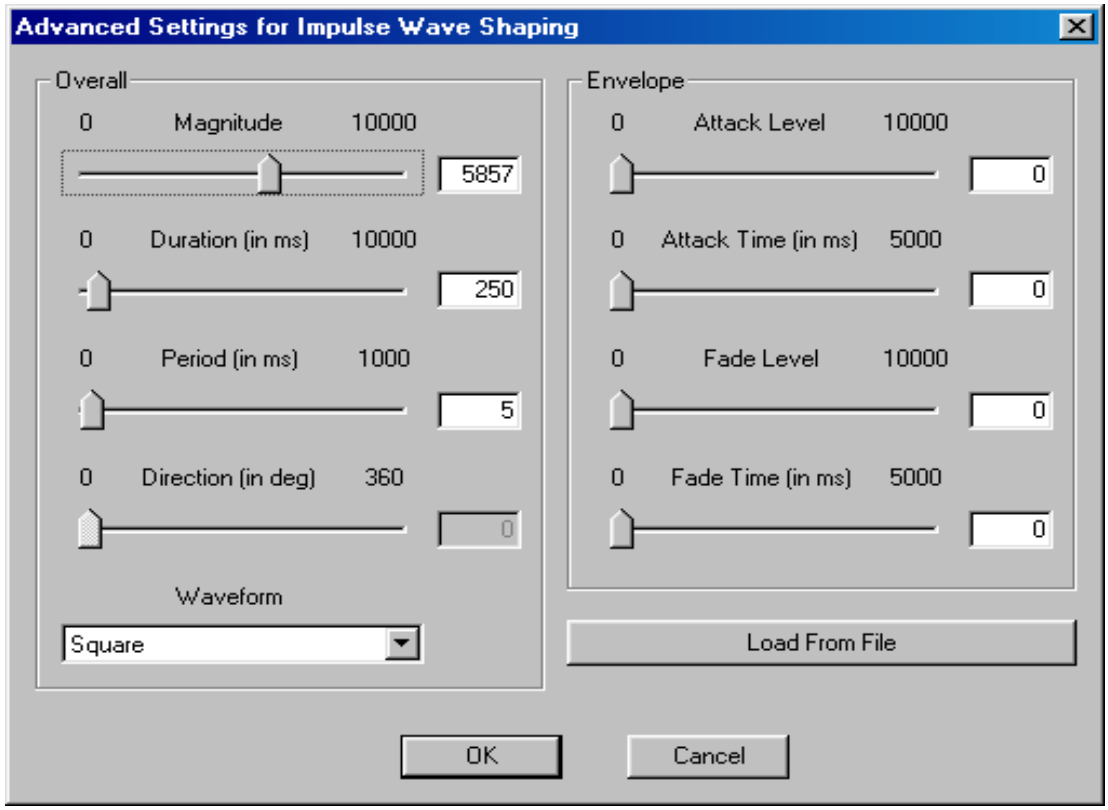

Dan's Data at 1.

84. Thus, vibratory feedback devices, including linear moving magnet actuators that allowed the user to customize the amplitude and frequency of vibration, were also well-known in the art prior to the '081 Patent.

D. <u>Claim Construction</u>

85. I have been informed by counsel that the first step in a patentability analysis involves construing the claims, as necessary, to determine their scope. Second, the construed claim language is then compared to the disclosures of the prior art. I am informed that claims are generally given their ordinary and customary

meaning as understood by a person having ordinary skill in the art at the time of the invention, in light of the patent specification.

86. I have been instructed to apply the following constructions in my analysis:

Claim Term	Construction
"a driving component that drives the moveable component in each of two opposite directions within the housing;" (Claim 1)	Subject to 35 U.S.C. § 112 ¶ 6. Function: "driving the moveable component in each of two opposite directions within the housing" Structure: "One or more coils or electromagnets"
"a control component that controls supply of power from the power supply to the driving component to cause the moveable component to oscillate at a frequency and an amplitude specified by user input received from the user-input features." (Claim 1)	Subject to 35 U.S.C. § 112 ¶ 6. Function: "controlling supply of power from the power supply to the driving component to cause the moveable component to oscillate at a frequency and an amplitude specified by user input received from the user-input features" Structure: "oscillator circuit; microcontroller with internal or external memory; processor; CPU; microprocessor; and equivalents thereof"

"wherein the control component receives output signals from sensors within the linear vibration module during operation of the linear vibration module and adjusts one or more operational control outputs of the control component according to the received output signals from the sensors." (Claim 3)	Subject to 35 U.S.C. § 112 ¶ 6. Function: "receiving output signals from sensors within the linear vibration module during operation of the linear vibration module and adjusts one or more operational control outputs of the control component according to the received output signals from the sensors." Structure: "oscillator circuit; microcontroller with internal or external memory; processor; CPU; microprocessor; and equivalents thereof"
"The linear vibration module of claim 1" (Claim 4)	"The linear vibration module of claim 3"
"wherein the control component adjusts the one or more operational control outputs of the control component according to the received output signals from the sensors in order that subsequent operation of the linear vibration module produces desired outputs from the one or more sensors corresponding to one or more	Subject to 35 U.S.C. § 112 ¶ 6. Function: "adjusting the one or more operational control outputs of the control component according to the received output signals from the sensors in order that subsequent operation of the linear vibration module produces desired outputs from the one or more sensors corresponding

operational control parameters." (Claim 4)	to one or more operational control parameters" Structure: "Same structure as described above with respect to claim 3."
"wherein the one or more operational control parameters is a strength of vibration produced by the linear oscillation of the moveable component; and wherein the one or more operational control outputs is a frequency at which the control component drives the moveable component to linearly oscillate, the control component dynamically adjusting the power supplied to the driving component to produce linear oscillation of the movable component at a resonant frequency for the linear vibration module." (Claim 5)	Subject to 35 U.S.C. § 112 ¶ 6. Function: "dynamically adjusting the power supplied to the driving component to produce linear oscillation of the movable component at a resonant frequency for the linear vibration module" Structure: "oscillator circuit; microcontroller with internal or external memory; processor; CPU; microprocessor; and equivalents thereof"

E. Summary of the Prior Art References

1. *Houston*

87. Houston "is generally related to vibration devices" including "devices such as those that produce haptic sensations to enhance the realism of a video game, vibratory parts feeders, and vibration shakers." *Houston* at [0002]. According to

Houston, "[a] limitation of eccentric mass rotary vibrators is that under continuous vibration the force of vibration is coupled to the magnitude of vibration, and thus it is not possible to modify the magnitude of vibration for a given vibration frequency." *Id.* at [0005]. Thus, like the '081 Patent, Houston is also directed to solving problems associated with generating vibrations using eccentric (i.e., unbalanced) rotating mass motors.

88. To solve this problem, Houston describes "linear motion vibration actuators" that "each include a moving magnet and a stationary electromagnetic coil." *Id.* at [0010]. "An exemplary linear motion vibration actuator 100 is shown in FIG. 4." Id. at [0112]. "As shown, the linear motion vibration actuator 100 contains a moving mass 102 and a base 104" where "[t]he moving mass 102 moves relative to the base 104 in a back and forth linear motion." *Id.* "As the moving mass 102 in the linear motion vibration actuator 100 moves back and forth, forces are generated between the moving mass 102 and the base 104." *Id.* at [0113].

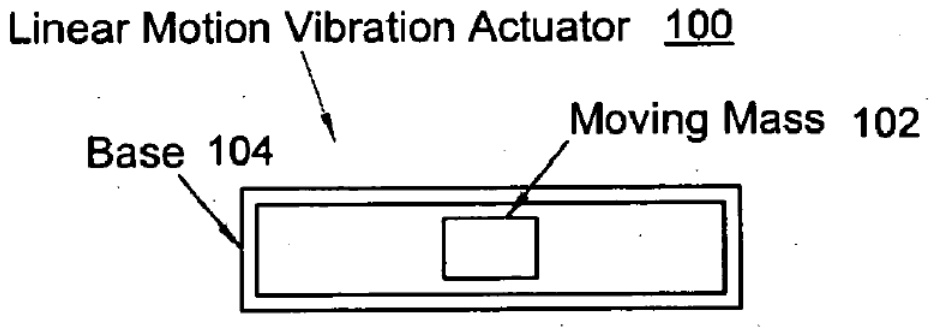

Id. at Fig. 4.

89. "The forces in the linear motion vibration actuator 100 may be magnetic forces, such as with a voice coil." *Id.* at [0114]. "The moving mass 102 may contain, for instance, a permanent magnet, electromagnet, ferromagnetic material, or any combination of these." *Id.* "A force in the linear motion vibration actuator 100 generated with an electromagnet can be modulated by controlling the current flowing through the electromagnet." *Id.*

90. Figures 5-8 all represent different implementations of the linear motion vibration actuator 100. For example, [o]ne embodiment of linear motion vibration actuator 100 in accordance with the present invention is shown in FIGS. 5A-B as linear motion vibration actuator 110." *Id.* at [0115]. "Actuator 110 preferably contains a moving mass 112 that comprises an electromagnet, as well as a permanent magnet 116 attached to the base 114." *Id.* "The motion of the moving mass 112 is along the x axis as shown in the side view in FIG. 5A." *Id.* "As shown in the end view of FIG. 5B, in the present embodiment the shape of the electromagnet is desirably cylindrical and the shape of the permanent magnet 116 is desirably tubular[.]" *Id.* "[T]he force in the actuator 110 can be modulated by controlling the current in the electromagnet." *Id.* at [0116]. "When the current in the electromagnet flows in one direction, then the magnetic force will push the moving mass 112 towards one side of the actuator." *Id.* "Conversely when the current in the

electromagnet flows in the other direction, then the moving mass 112 will be pushed to the other side of the actuator 110." *Id.*

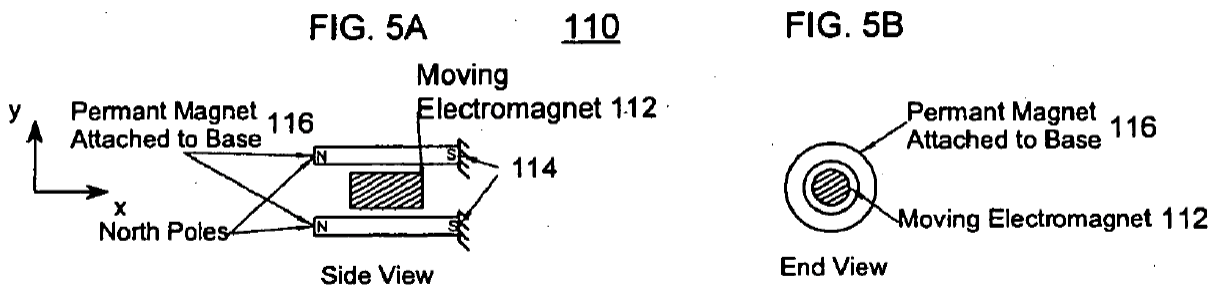

Id. at Figs. 5A-B.

91. The implementation depicted in Figures 6A-B is similar to that of Figures 5A-B except "[h]ere, linear motion vibration actuator 120 preferably contains a moving mass 122 that comprises a permanent magnet, as well as an electromagnet magnet 126 attached to base 124." *Id.* at [0117].

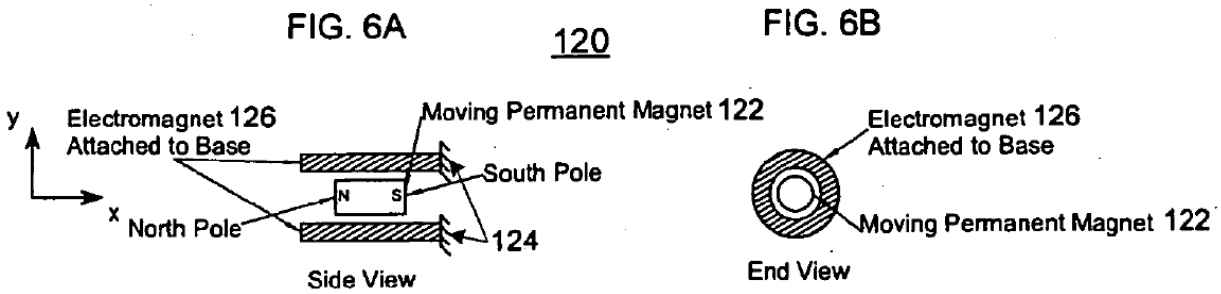

Id. at Figs. 6A-B.

92. Figures 7A-B and 8A-B are nearly identical to Figures 6A-B except that they include springs 138 and magnets 148, respectively, at the ends of the base to provide a restoring force that causes the moving magnet to return to the center

position. *Id.* at [0119] ("The springs 138 are operable to generate forces in a direction that returns the moving mass 132 to a center position, for instance midway between either end of the electromagnet 136."); [0121] ("In this embodiment, a pair of permanent magnets 148 is attached to the base and are in operative relation to the moving magnet 142 at either end as shown in the side view of FIG. 8A. The permanent magnets 148 have poles, as shown by the N and S in FIG. 8A, which are configured to repel the moving mass 142 and to generate forces in a direction that returns the moving mass 142 to a center position.").

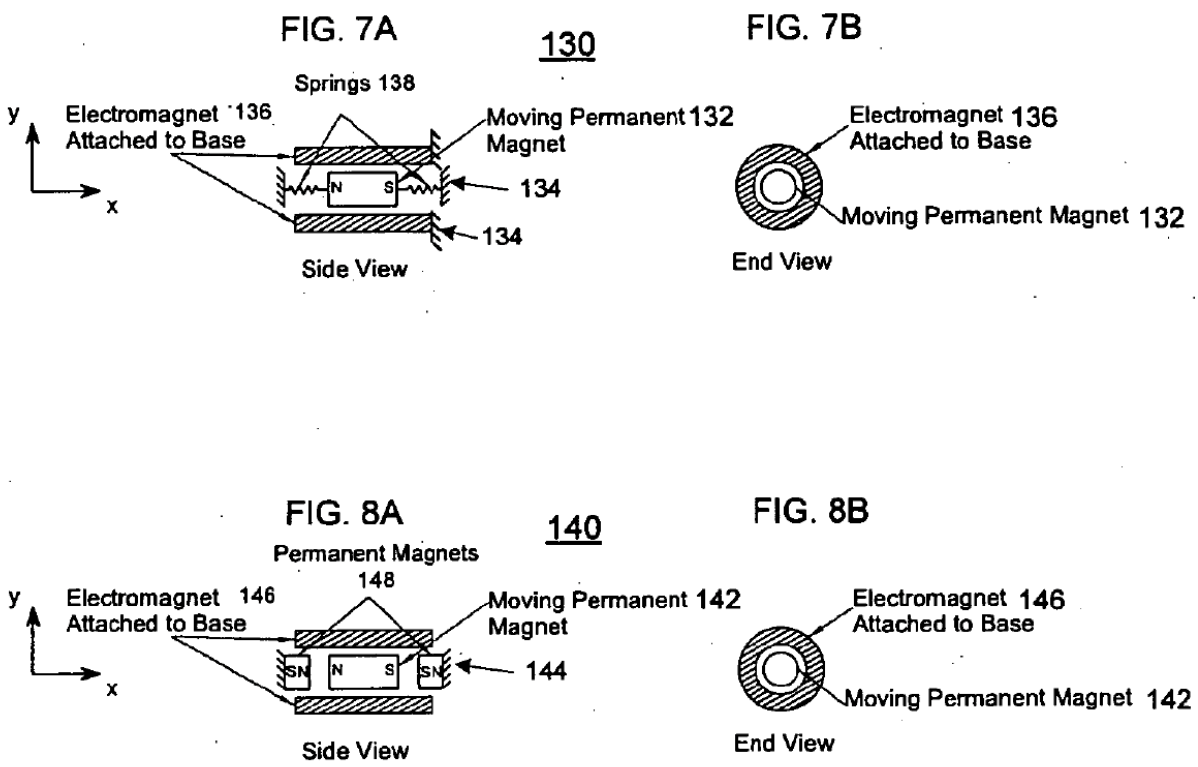

Id. at Figs. 7A-B, 8A-B.

93. I have been informed that for a prior art reference to be proper for use in an obviousness analysis, the reference must be "analogous art" to the claimed invention. I have been informed that a prior art reference is analogous to the claimed invention if the reference is from the same field of endeavor as the claimed invention or if it is reasonably pertinent to the particular problem that the inventor was trying to solve.

94. As discussed above, the field of endeavor of the claimed invention of the '081 Patent at least includes linear vibration modules. *See* ¶¶ 50-51. As demonstrated above, Houston teaches a variety of linear motion vibration actuators. Thus, Houston is in the same field of endeavor as the claimed invention of the '081 Patent.

95. Houston is also reasonably pertinent to the problem solved by the inventors of the '081 Patent. As discussed above, the '081 Patent is directed to solving problems associated with using unbalanced electric motors to generate vibrations. *See* ¶¶ 30-31. As demonstrated above, Houston proposes using linear motion vibration actuators to generate vibrations. Thus, a POSITA would have consulted Houston and applied its teachings when faced with the problems associated with using an unbalanced electric motor to generate vibrations.

2. *Goldenberg*

96. Goldenberg "describes techniques for controlling a vibrotactile interface controller, such as a haptic feedback gamepad, using more sophisticated force effects, as well as techniques for enhancing the vibrotactile feedback output by such vibrotactile controllers." *Goldenberg* at [0016]. Per Goldenberg, "the term 'vibrotactile device' or 'vibrotactile feedback device' is intended to refer to any controller or interface device that outputs vibrations to the user of the device, and can include gamepads, handheld steering wheels, fishing-type controllers, joysticks, mice, trackballs, adult devices, grips, remote controls, handheld game devices, flat screens, styluses, etc." *Id.*

97. "FIG. 4 is a block diagram illustrating a haptic system 100" that "includes a host computer 102 and a vibrotactile device 104." *Id.* at [0017]. "Host computer 102 is any of a variety of computing or electronic devices" such as "a personal computer, game console, or workstation, such as a PC compatible computer or Macintosh personal computer, or game console system from Nintendo Corp., Sega Corp., Sony Corp., or Microsoft Corp." *Id.* at [0018].

98. "Vibrotactile interface device 104 is coupled to host computer 102 by a bi-directional bus 108." *Id.* at [0022]. As shown in Figure 4 below, the vibrotactile interface device 104 includes, among other things, a local microprocessor 110 that is "dedicated to haptic feedback and sensor I/O of device 104." *Id.* at [0023].

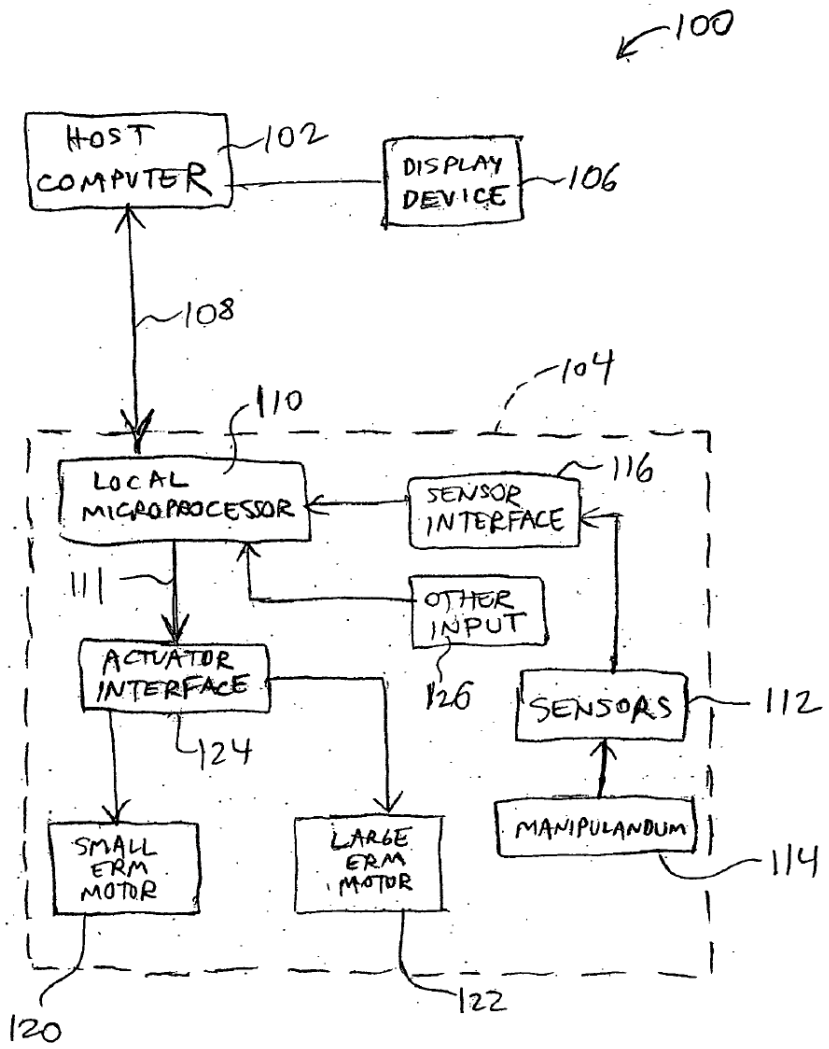

Id. at Fig. 4.

99. The vibrotactile interface device 104 also includes actuators 120 and 122, which "transmit forces to the user of the device 104 in response to signals or commands received from microprocessor 110 and/or host computer 102." *Id.* at [0031]. Per Goldenberg, "Many different types of actuators can be used, e.g. any type of actuator which can rotate an eccentric mass in a direction, **such as voice coil actuators, moving magnet actuators**, hydraulic or pneumatic actuators, torquers,

brushed or brushless motors, etc." *Id.* at [0032] (emphasis added); *see also, id.* at [0059] ("Note that the control methods described herein can be applied not only to rotational motors but other types of 1 DOF actuators, rotational and **linear**, including **moving magnet motors**, solenoids, **voice coil actuators**, etc.") (emphasis added). A power supply is "coupled to actuator interface 124 and/or actuators 120 and 122 to provide electrical power to the actuators." *Id.* at [0034].

100. I have been informed that for a prior art reference to be proper for use in an obviousness analysis, the reference must be "analogous art" to the claimed invention. I have been informed that a prior art reference is analogous to the claimed invention if the reference is from the same field of endeavor as the claimed invention or if it is reasonably pertinent to the particular problem that the inventor was trying to solve.

101. As discussed above, the field of endeavor of the claimed invention of the '081 Patent at least includes linear vibration modules. *See* ¶¶ 50-51. As demonstrated above, Goldenberg teaches a vibrotactile interface device that includes actuators, such as linear moving magnet motors and voice coil actuators, to generate vibrations and other haptic feedback. Thus, Goldenberg is in the same field of endeavor as the claimed invention of the '081 Patent.

102. Goldenberg is also reasonably pertinent to the problem solved by the inventors of the '081 Patent. As discussed above, the '081 Patent is directed to

solving problems associated with using unbalanced electric motors to generate vibrations. *See* ¶¶ 30-31. As demonstrated above, Goldenberg's vibrotactile interface device includes actuators, such as linear moving magnet motors and voice coil actuators, to generate vibrations and other haptic feedback. Thus, a POSITA would have consulted Goldenberg and applied its teachings when faced with the problems associated with using an unbalanced electric motor to generate vibrations.

3. *Ibuki*

103. Ibuki describes a "[v]ibrating linear actuator and method of operating same." *Ibuki* at Abstract. "FIG. 3 shows a vibrating linear actuator 10 according to a first preferred embodiment of the present invention." *Id.* at 4:19-22. "The actuator 10 includes a stator 1 having a coil 11, and being fixed to a frame 3." *Id.* at 4:22-23. "Attached to the frame 3 is a moving portion 2 that is supported by springs 4 that are each affixed to the frame." *Id.* at 4:23-25. "The moving portion 2 reciprocates in the direction of arrows A, A′ by deforming the springs 4 and has a permanent magnet 20 that has magnetic poles N, S arranged at the side of the moving portion opposing the stator 1." *Id.* at 4:25-29. "The coil 11 of the stator 1 is supplied with a current whose direction is switched at a predetermined period, so that the moving portion 2 is driven to reciprocate." *Id.* at 4:33-35.

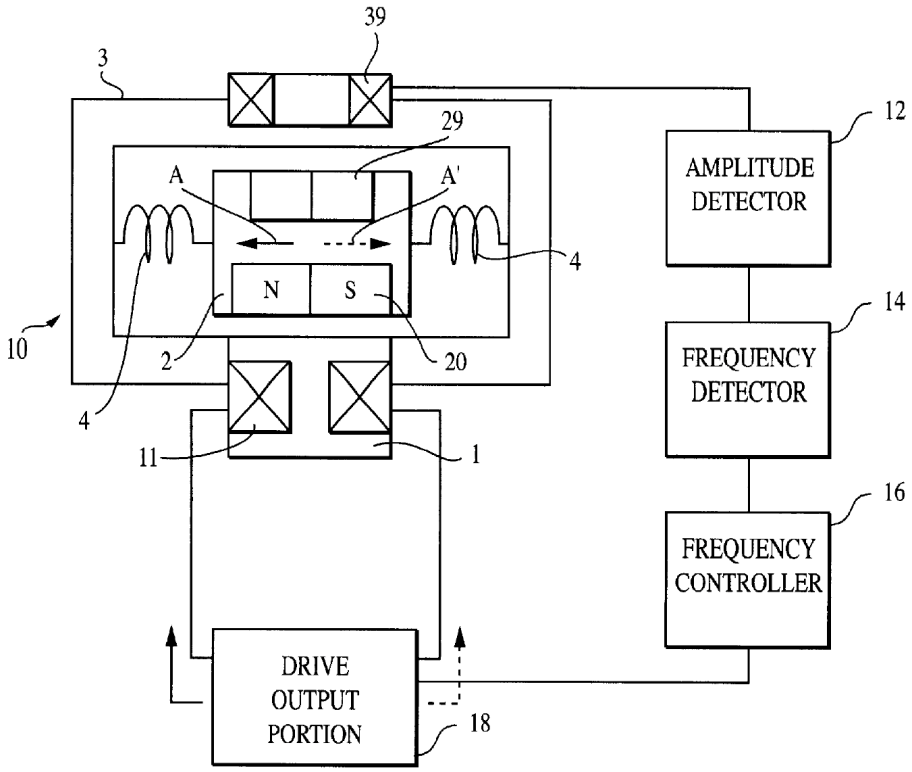

Id. at Fig. 3.

104. I have been informed that for a prior art reference to be proper for use in an obviousness analysis, the reference must be "analogous art" to the claimed invention. I have been informed that a prior art reference is analogous to the claimed invention if the reference is from the same field of endeavor as the claimed invention or if it is reasonably pertinent to the particular problem that the inventor was trying to solve.

105. As discussed above, the field of endeavor of the claimed invention of the '081 Patent at least includes linear vibration modules. *See* ¶¶ 50-51. As

demonstrated above, Ibuki teaches a vibrating linear actuator. Thus, Ibuki is in the same field of endeavor as the claimed invention of the ’081 Patent.

106. Ibuki is also reasonably pertinent to the problem solved by the inventors of the ’081 Patent. As discussed above, the ’081 Patent is directed to solving problems associated with using unbalanced electric motors to generate vibrations. *See* ¶¶ 30-31. As demonstrated above, Ibuki teaches a vibrating linear actuator. Thus, a POSITA would have consulted Ibuki and applied its teachings when faced with the problems associated with using an unbalanced electric motor to generate vibrations.

4. *Rosenberg*

107. Rosenberg “relates generally to interface devices between humans and computers, and more particularly to computer interface devices that provide force feedback to the user.” *Rosenberg* at 1:24-27. Rosenberg describes a virtual reality system 10 including “a human/computer interface apparatus 12, an electronic interface 14, and a host computer 16.” *Id.* at 8:15-18. “[T]he interface apparatus uses voice coil actuators that produce forces in either **linear** or rotary degrees of freedom using currents applied in a magnetic fields.” *Id.* at Abstract (emphasis added). In the linear voice coil embodiment, magnets “form a linear channel through which a coil head … translates.” *Id.* at 31:27-31.

108. I have been informed that for a prior art reference to be proper for use in an obviousness analysis, the reference must be "analogous art" to the claimed invention. I have been informed that a prior art reference is analogous to the claimed invention if the reference is from the same field of endeavor as the claimed invention.

109. As discussed above, the field of endeavor of the claimed invention of the '081 Patent at least includes linear vibration modules. *See* ¶¶ 50-51. As demonstrated above, Rosenberg teaches producing forces using linear voice coil actuators. Thus, Rosenberg is in the same field of endeavor as the claimed invention of the '081 Patent.

5. *Tierling*

110. Tierling generally describes a "method and apparatus for providing tactile sensations." *Tierling* at Abstract. According to Tierling, "One problem with current haptic feedback devices is that tactile sensations output to the user tend to be more effective in particular frequency ranges and less effective in other frequency ranges." *Id.* at [0006]. "For example, vibrations output on the housing by an inertial haptic feedback device often feel strong to the user at higher frequencies of vibration, but often feel less strong to the user at lower frequencies." *Id.* Regarding haptic feedback devices including linear-moving mass actuators, Tierling states that the inertial mass moves slower for lower frequency vibrations, which means that "the mass does not accelerate as much and causes tactile sensations that feel less strong."

Id. "In addition, the mass might be pressed against the limits of its range of motion during most of the cycle time of the vibration, providing less force to be felt by the user." *Id.*

111. To solve this problem, Tierling proposes a tactile feedback interface system 10 "capable of providing input to a host computer based on the user's manipulation of the interface device and capable of providing tactile feedback to the user of the system based on events occurring in a program implemented by the host computer." *Id.* at [0028]. Interface device 12 may be an input device, such as a mouse or other handheld device. *Id.* ("In the described embodiment of FIG. 1, device 12 is a mouse, but can be other types of devices as discussed below."), [0036] ("[T]he device 12 can instead be a different interface device or control device. For example, handheld devices are very suitable for the actuator assemblies described herein."), Fig. 1.

112. As shown in Figure 4, the haptic feedback interface device 12 includes, among other things, local microprocessor 170, which "can receive signals from sensor(s) 172 and provide signals to actuator assembly 54 in accordance with instructions provided by host computer 14 over bus 20." *Id.* at [0054].

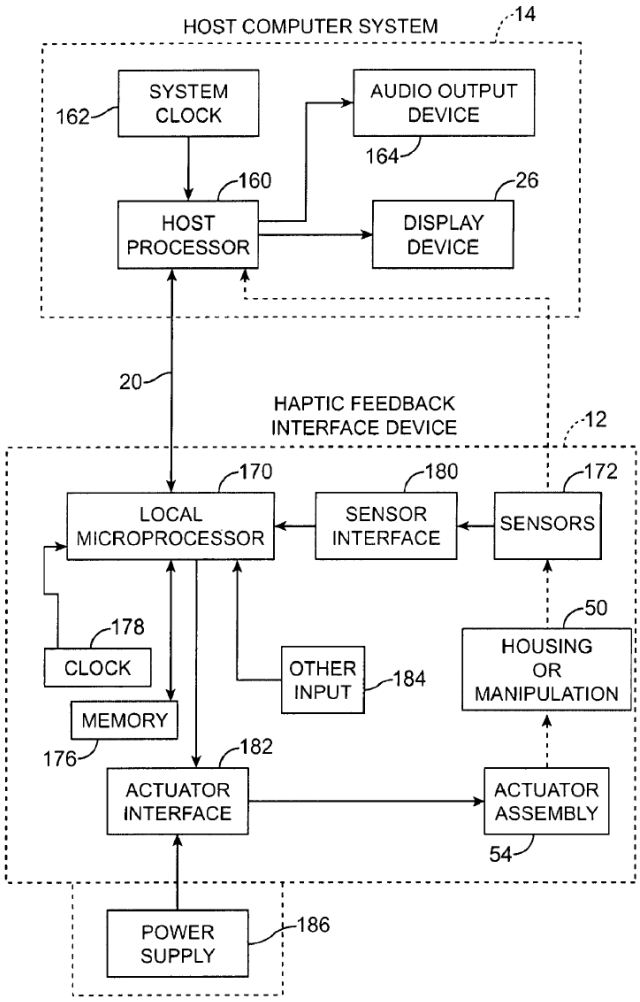

Id. at Fig. 4.

113. The actuator assembly 54 includes an actuator 66 that "acts as an inertial mass" that "is oscillated in a linear direction by the actuator 66, such as approximately along the z-axis 51 which is approximately perpendicular to the planar workspace of the mouse, thereby conveying haptic feedback such as tactile sensations to the user of the mouse who is contacting the housing." *Id.* at [0041]. According to Tierling, "a linear force can be output using a linearly moving element,

as in a voice coil actuator or a linear moving-magnet actuator, which are suitable for high bandwidth actuation." *Id.* at [0042].

114. As I discussed above, I have been informed that for a prior art reference to be proper for use in an obviousness analysis, the reference must be "analogous art" to the claimed invention. I have been informed that a prior art reference is analogous to the claimed invention if, for example, the reference is from the same field of endeavor as the claimed invention.

115. As discussed above, the field of endeavor of the claimed invention of the '081 Patent at least includes linear vibration modules. *See* ¶¶ 50-51. As demonstrated above, Tierling teaches generating vibrations using a linear voice coil actuator or a linear moving-magnet actuator. Thus, Tierling is in the same field of endeavor as the claimed invention of the '081 Patent.

116. Tierling is also reasonably pertinent to the problem solved by the inventors of the '081 Patent. As discussed above, the '081 Patent is directed to solving problems associated with using unbalanced electric motors to generate vibrations. *See* ¶¶ 30-31. As demonstrated above, Tierling proposes using a linear voice coil actuator or a linear moving-magnet actuator to generate vibrations in a haptic feedback interface device. Thus, a POSITA would have consulted Tierling and applied its teachings when faced with the problems associated with using an unbalanced electric motor to generate vibrations.

6. *Fukumoto*

117. Fukumoto "relates to a user interface and vibration generation mechanism of an electronic device." *Fukumoto* at [0001]. Specifically, Fukumoto describes an electronic device, such as a PDA, "a vibration generator, a vibration-type reporting method, and a report control method enabling a user to easily confirm without viewing a screen receipt of an input operation or a response of the electronic device with respect to an operation input." *Id.* at [0006]. "FIG. 2 is a block diagram illustrating the hardware configuration of the PDA 10," which includes "a touch panel 102, a display unit 103, a key input unit 111, a memory 112, a CPU (central processing unit) 113, a drive signal generation circuit 114, and an oscillatory actuator 115." *Id.* at [0147].

118. "The oscillatory actuator 115 is a **linear** oscillatory actuator of a so-called **moving permanent magnet type** which uses a permanent magnet as a movable weight (weight) and causes the movable weight to **linearly reciprocate** by electromagnetic force to cause generation of vibration." *Id.* at [0151] (emphasis added). As shown in Figure 3, the linear oscillatory actuator 115 includes a case 115a that encloses "a cylindrical coil 121 fixed to the top surface of the case 115 a, a columnar movable weight 122 made of permanent magnet and having an annular space in which the coil 121 fits, and a spring 123 for supporting the movable weight 122." *Id.* at [0152].

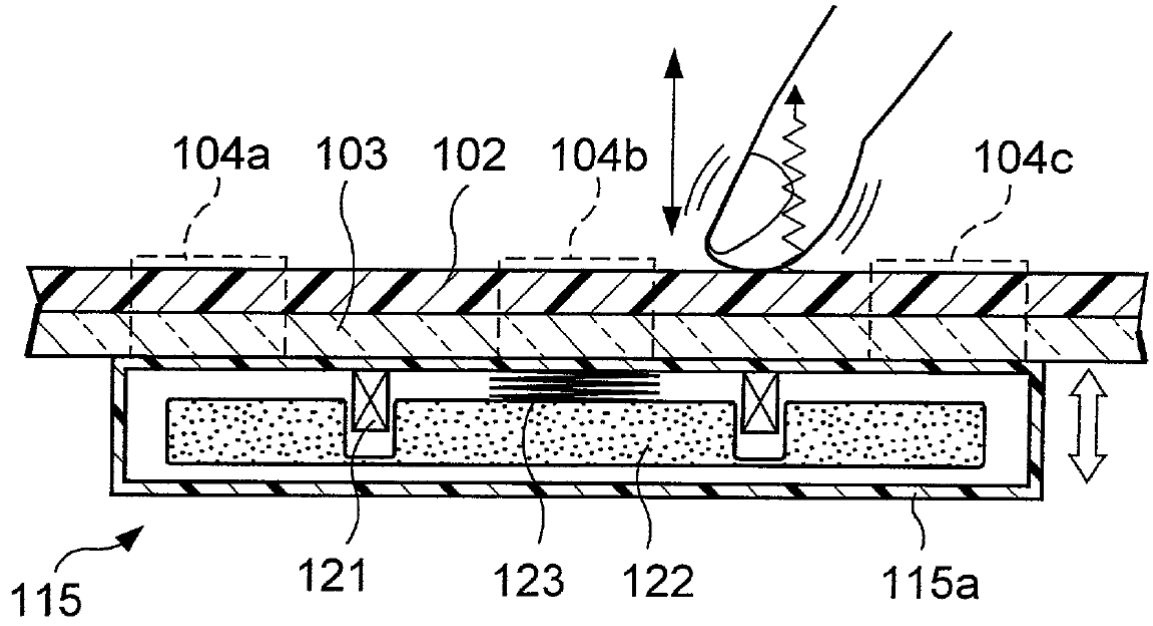

Id. at Fig. 3.

119. "The movable weight 122 linearly reciprocates in the vertical direction in the figure by the magnetic force generated from the coil 121 when an AC (alternating) current (drive signal) is applied to the coil 121." *Id.* at [0155]. "Note that the portion of the case 115 a to which the spring 123 is connected receives a vibration component transmitted from the movable weight 122 through the spring 123 in addition to the counter force of the reciprocation along with the reciprocation of the movable weight 122." *Id.*

120. The PDA's "CPU 113 executes a vibration control processing 1" such that "[u]pon detection of an operation input from the touch panel 102 or any one of operation keys 104 a to 104 c, it drives the oscillatory actuator 115 through the drive signal generation circuit 114 to cause the touch panel 102 or one of the operation

keys 104 a to 104 c to vibrate." *Id.* at [0149]. Specifically, "the CPU 113 determines whether a touch signal has been input from the touch panel 102 and whether a key operation signal has been input from the key input unit 111 (step S101)." *Id.* at [0168]; *see also, id.* at Fig. 5. "[W]hen the CPU 113 determines that at least one of the touch signal or key operation signal has been input, it first reads from the memory 112 the waveform data of the drive signal to be applied to the oscillatory actuator 115 (step S102)." *Id.* at [0168]. "The drive signal generation circuit 114 generates a drive signal for driving the oscillatory actuator 115 in accordance with waveform data supplied from the CPU 113." *Id.* at [0150].

121. I have been informed that for a prior art reference to be proper for use in an obviousness analysis, the reference must be "analogous art" to the claimed invention. I have been informed that a prior art reference is analogous to the claimed invention if the reference is from the same field of endeavor as the claimed invention or if it is reasonably pertinent to the particular problem that the inventor was trying to solve.

122. As discussed above, the field of endeavor of the claimed invention of the '081 Patent at least includes linear vibration modules. *See* ¶¶ 50-51. As demonstrated above, Fukumoto teaches a linear moving magnet actuator used to generate vibrations in response to user input. Thus, Fukumoto is in the same field of endeavor as the claimed invention of the '081 Patent.

123. Fukumoto is also reasonably pertinent to the problem solved by the inventors of the ’081 Patent. As discussed above, the ’081 Patent is directed to solving problems associated with using unbalanced electric motors to generate vibrations. *See* ¶¶ 30-31. As demonstrated above, Fukumoto teaches a linear moving magnet actuator used to generate vibrations in response to user input. Thus, a POSITA would have consulted Fukumoto and applied its teachings when faced with the problems associated with using an unbalanced electric motor to generate vibrations.

F. Level of a Person Having Ordinary Skill in the Art

124. I have been asked to provide my opinion as to the level of skill of a person having ordinary skill in the art at the time of the ’081 Patent, which I have been instructed to assume is May 18, 2009. In determining the characteristics of a hypothetical person having ordinary skill in the art at the time of the claimed invention, I was told to consider several factors, including the type of problems encountered in the art, the solutions to those problems, the rapidity with which innovations are made in the field, the sophistication of the technology, and the education level of active workers in the field. I also placed myself back in the time frame of the claimed invention and considered the colleagues with whom I had worked at that time.

125. In my opinion, a person having ordinary skill in the art, as of May 18, 2009, would have an engineering-related undergraduate degree such as electrical, mechanical, or computer engineering, with at least two years of experience with computer-controlled electrical or electronic systems, or equivalent academic experience (e.g., a master's degree with a similar focus). Such a person would have been capable of understanding the '081 Patent and the prior art references discussed below.

126. Based on my education, training, and professional experience in the field of the claimed invention, I am familiar with the level and abilities of a person of ordinary skill in the art at the time of the claimed invention. Additionally, I met at least these minimum qualifications to be a person having ordinary skill in the art as of the time of the claimed invention of the '081 Patent.

G. <u>Obvious to Combine Embodiments of Houston</u>

127. I have been informed that there must be a motivation to make a combination when combining multiple embodiments from a single reference. I have been asked to consider whether it would have been obvious to combine certain embodiments of Houston.

128. Houston teaches "a wide variety of vibration devices, haptic interfaces, game controllers and vibratory control systems." *Houston* at [0009]. In my analysis of the Challenged Claims below, I have primarily relied on the computer system of

Figure 38, which "includes a systems controller 622, which provides force commands to a haptic interface 624 that generates forces which result in force sensations being received by user 626." *Id.* at [0213]. "A graphical display 628 is also provided for receiving image commands from the system controller 622 and for displaying a visual image to the user 626." *Id.* Houston's haptic interface 624 also includes "an input device 636" that can "detect user input and which can include buttons, joysticks, and pressure sensors." *Id.* at [0214]

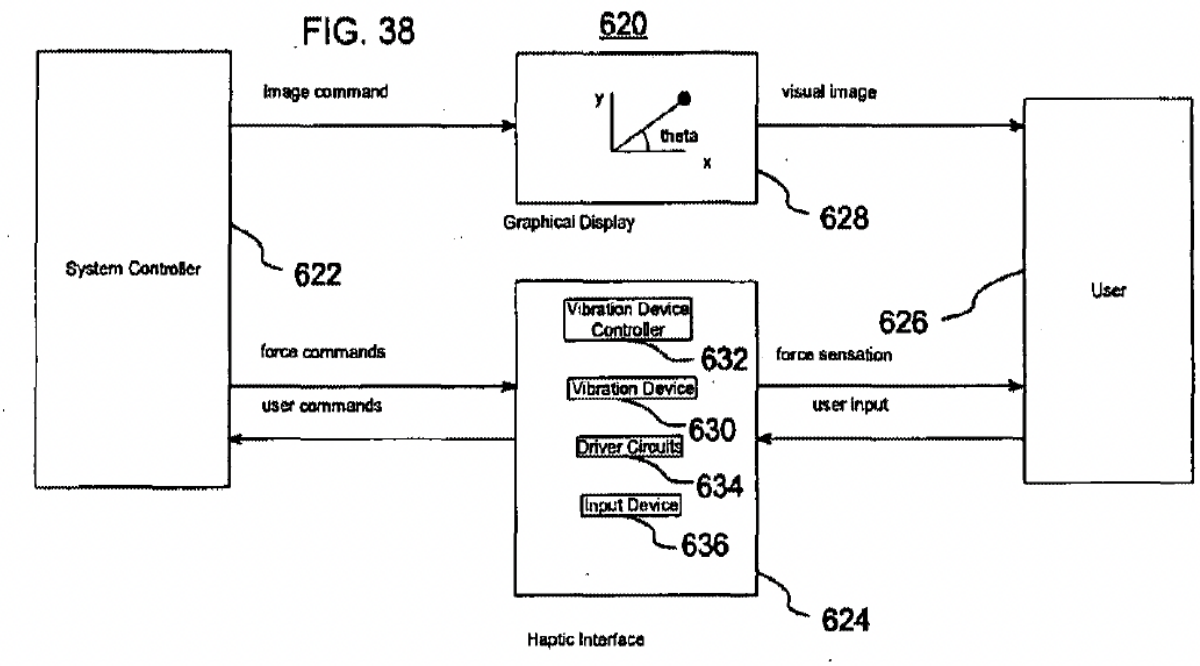

Id. at Fig. 38.

129. The graphical display 628 displays images relating to, for example, simulations "of a user firing a gun," "an impact between objects," "driving a vehicle," and "a car or spacecraft spinning out of control." *Id.* at [00216]-[0219]. A

POSITA would have understood that these types of simulations are commonly included in video games, whether played on a video game console or a computer. *See* ¶¶ 80-81. Thus, a POSITA would have understood that the system of Figure 38 is applicable to a video game system where the system controller 622 is a video game console or computer running game software.

130. As depicted above, the haptic interface 624 "includes a vibration device 630 having vibration actuators (not shown), a vibration controller 632, driver circuits 634 which drive the vibration device actuators, and an input device 636, which can detect user input and which can include buttons, joysticks, and pressure sensors." *Houston* at [0214]. Because the system of Figure 38 is applicable to a video game system, the haptic interface device 624 is similarly applicable to a video game controller. Per Houston, "[t]he components of the haptic interface 624 may be of **any of the configurations described herein**." *Id.* at [0214] (emphasis added).

1. *Obvious to Implement Haptic Interface 624 as the Game Controller of Figure 16*

131. Figure 16 "illustrates a vibration device 240 having a pair of actuators 242 and 244." *Houston* at [0157]. "In this embodiment, vibration device housing 250 is configured as a hand held game controller for computer or video games." *Id.* "Linear motion vibration actuator 242 is shown as being located in the left handle and linear motion vibration actuator 244 is shown as being located in the right handle." *Id.*

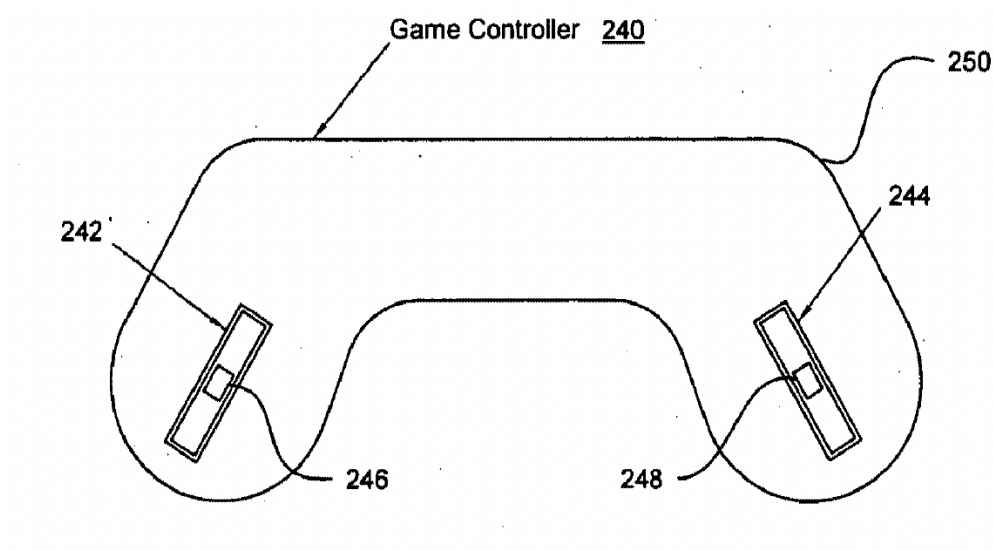

Id. at Fig. 16.

132. It would have been obvious, and a POSITA would have been motivated to implement the haptic interface 624 of Figure 38 as the game controller 240 of Figure 16. As I discussed above, a POSITA would have understood that the system of Figure 38 corresponds to a computerized gaming system, and haptic interface 624 corresponds to a video game controller. *See* ¶¶ 129-130. This is further confirmed by Houston's description of haptic interface 624. Specifically, Houston teaches that user 626 provides inputs to the haptic interface 624 via input device 636, which "include[s] buttons, joysticks, and pressure sensors." *Houston* at [0214]; *see also, id.* at Fig. 38. This is consistent with video game controllers such as the DualShock, for example, which included input devices, including buttons and joysticks that the user actuated to provide commands to the game console. *See e.g., DualShock Manual*.

133. Like conventional video game systems of the time, Houston also teaches that the user inputs are then sent to the system controller 622 as user commands, which are interpreted by the system controller and used to generate image commands for graphical display 628 and force commands for haptic interface 624. *Houston* at [0210] ("The user 606 can input commands to the haptic interface 604 that are transmitted as user commands back to the system controller 602. The user commands can be input through pressing buttons, moving joysticks, squeezing the haptic interface at various level forces, moving the haptic interface, applying force and torque onto the haptic interface and through other means."), [0213] ("This embodiment is similar to the one of FIG. 37, and includes a systems controller 622, which provides force commands to a haptic interface 624 that generates forces which result in force sensations being received by user 626. A graphical display 628 is also provided for receiving image commands from the system controller 622 and for displaying a visual image to the user 626."), Fig. 38. As noted above, Figure 38's computer system simulates actions commonly included in video games, including firing a gun, driving a car or other vehicle, colliding with another object, etc. *Id.* at [0216] ("A first example involves the simulation of a user firing a gun."), [0217] ("A second example involves an impact between objects."), [0218] ("A third example involves driving a vehicle."), [0219] ("A fourth example involves a car or spacecraft spinning out of control."); *see* ¶¶ 80-81.

134. Given these similarities between Figure 38's computer system and typical video game systems available at the time of the '081 Patent, a POSITA would have been motivated to combine the prior art elements of Figure 38's computer system with Figure 16's video game controller according to known methods to yield the predictable result of a video game system that receives user inputs and provides haptic feedback to the user.

135. As discussed above, haptic interface 624 "includes a vibration device 630 having vibration actuators[.]" *Houston* at [0214]. Because game controller 240 includes linear motion vibration actuators 242, 244, it would have also been obvious to a POSITA to implement vibration device 630 using linear motion vibration actuators 242, 244 for the same reasons.

136. Because video game systems including haptic video game controllers have been well known since the 1990s (*see* ¶¶ 77-81) and because Houston teaches that "[t]he components of the haptic interface 624 may be of any of the configurations described herein," there would have been a reasonable expectation of success implementing Figure 38's haptic interface 624 using Figure 16's game controller 240. *Houston* at [0214].

2. *Obvious to Implement Vibration Device 630 Using the Linear Motion Vibration Actuator of Figure 4*

137. For the reasons discussed above, it would have been obvious to implement Figure 38's vibration device 630 using Figure 16's linear motion

vibration actuators 242, 244. *See* ¶¶ 131-136. "The actuators 242 and 244 include moving masses 246 and 248, respectively." *Houston* at [0157]. Figure 4 and its corresponding disclosure provide more details regarding linear motion vibration actuators, such as shown in Figure 16. Specifically, Figure 4 depicts a linear motion vibration actuator 100 that "contains a moving mass 102 and a base 104." *Id.* at [0112]. As shown in the following side-by-side comparison, Figure 16's linear motion vibration actuators 242, 244 also include a base and moving masses and appear identical to Figure 4's linear motion vibration actuator 100:

FIG. 16

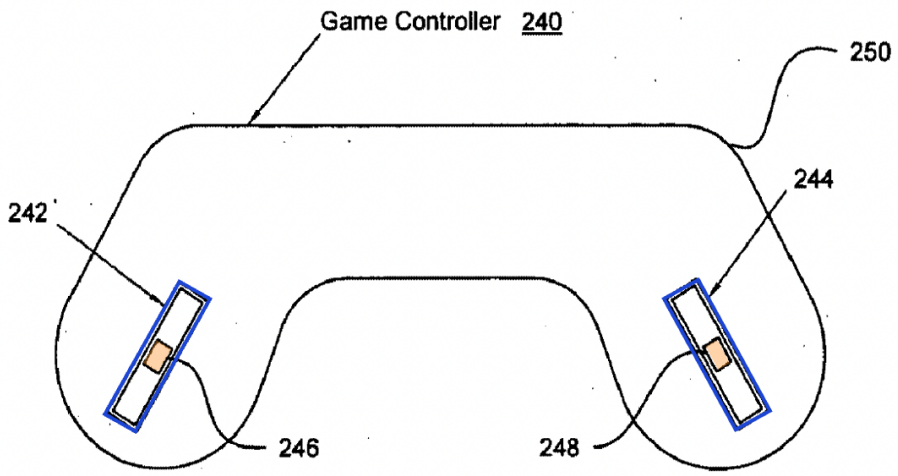

FIG. 4

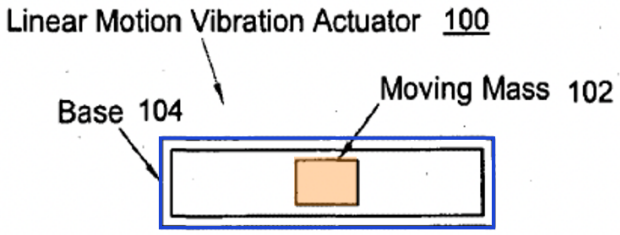

Id. at Figs. 16, 4 (emphasis added).

138. In Figure 4, "[t]he moving mass 102 moves relative to the base 104 in a back and forth linear motion." *Id.* at [0112]. "The forces in the linear motion vibration actuator 100 may be magnetic forces, such as with a voice coil." *Id.* at [0114]. "The moving mass 102 may contain, for instance, a permanent magnet, electromagnet, ferromagnetic material, or any combination of these." *Id.* "The base 104 may contain, for instance, a permanent magnet, an electromagnet, ferromagnetic material, or any combination of these." *Id.* "Magnetic forces may be generated between base 104 and the moving magnet that generate acceleration and motion of the moving mass 104." *Id.*

139. Based on the similarities of the actuators 242 and 244 of Figure 16 and actuator 100 in Figure 4, it would have been obvious, and a POSITA would have been motivated to implement actuators 242 and 244, which are the actuators of vibration device 630, using Figure 4's linear motion vibration actuator 100. A POSITA would have understood that the linear motion vibration actuators 242, 244 as they are depicted in Figure 16, are identical to the linear motion actuator 100 depicted in Figure 4 and include the same basic components, including a moving mass and a base. Indeed, a POSITA would have understood that Figure 4 provides a more detailed description of linear motion vibration actuators later described in Houston, including linear motion vibration actuators 242, 244. Thus, a POSITA would have been motivated to look to the disclosures of Figure 4 to gain a more

detailed understanding of the components of linear motion vibration actuators 242, 244. Houston's depiction of linear motion vibration actuators 242, 244 as identical to linear motion actuator 100 is an express teaching, suggestion, and motivation to implement linear motion vibration actuators 242, 244 using linear motion actuator 100. Because linear motion vibration actuators 242, 244 are identical to linear motion actuator 100, there would have been a reasonable expectation of success modifying haptic interface 624 as described above.

140. Houston's Figures 5-8 represent different embodiments of Figure 4's linear motion vibration actuator 100. *Houston* at [0115], [0117], [0119], [0121], Figs. 5A-B, 6A-B, 7A-B, 8A-B. For most of the claim limitations, it does not matter which implementation of linear motion vibration actuator 100 is used because they all include the same basic components including a base, a moving mass/magnet, and an electromagnet. However, where a specific implementation is required by the Challenged Claims, I provide an analysis detailing why that particular implementation would have been obvious to a POSITA.

3. *Obvious to Implement Vibration Controller 632 as a Microprocessor Per the Embodiment of Figure 31*

141. As noted above, Figure 38's haptic interface 624 also includes "a vibration controller 632" and "driver circuits 634 which drive the vibration device actuators[.]" *Houston* at [0214], Fig. 38. "The embodiment shown in FIG. 38 can be utilized so that the force sensations felt by the user 626 are **generated by the**

vibration device controller 632 specifically to correspond to the image on the graphical display 628." *Id.* at [0215] (emphasis added). "The vibration device controller 632 may specify one or more of the amplitude of vibration, $A_{combined}$, direction of force, theta, and frequency of vibration, f, as described above." *Id.* Thus, Houston describes the functions performed by vibration device controller 632 but does not specify the hardware components used to implement it.

142. In a related embodiment, Figure 31 depicts "system 500 having a controller for one or more vibration devices that use linear motion vibration actuators[.]" *Id.* at [0196]. "**Vibration device controller** 502 specifies the desired vibration effect and one or more driver circuit(s) 504_a, 504_b, . . . , 504_N provide the necessary power to actuators 506_a, 506_b, . . . , 506_N." *Id.* (emphasis added).

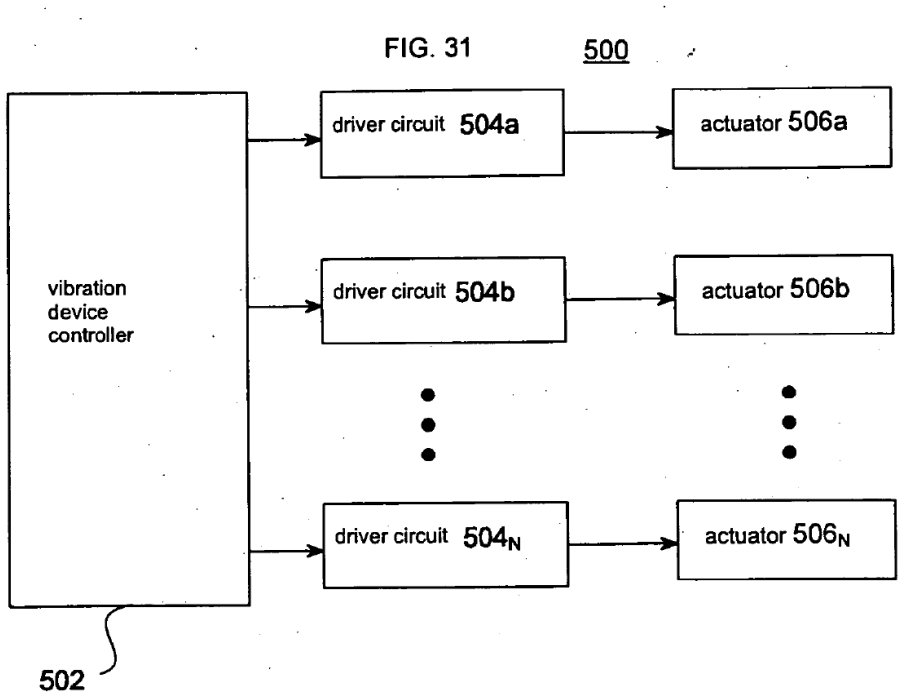

Id. at Fig. 31.

143. Thus, like Figure 38's vibration device controller 632, Figure 31's vibration device controller 502 also specifies the desired vibration effect to be output by the actuators.

144. "The controller 502 may be,…a microprocessor and the driver circuit(s) 504 may be, for instance, one or more electrical amplifiers." *Id.* at [0197]. For example, Houston teaches that the driver circuit/amplifier may be an "H bridge, such as the L298 manufactured by ST Microelectronics." *Id.* at [0250]. Houston further teaches that "controller 502 and drive circuit 504 may be integrated into a single microprocessor[.]" *Id.* at [0197].

145. Houston expressly suggests using system 500 for vibration devices including linear motion vibration actuators. *Houston* at [0196]. Because haptic interface 624, as modified in view of Figures 16 and 4, utilizes linear motion vibration actuators, it would have been obvious, and a POSITA would have been motivated to implement vibration controller 632 as a microprocessor and driver circuits 634 as electrical amplifiers, such as H-bridges. There would have been a reasonable expectation of success because system 500 directly applies to vibration devices that include linear motion vibration actuators.

H. Ground 1: Claims 1, 2, 7, 8, and 17 are obvious over Houston and Goldenberg

1. *Claim 1*

(a) *1[P] A linear vibration module comprising:*

146. For the reasons discussed above, it would have been obvious to implement Houston's haptic interface 624 using Figure 16's game controller 240. *See* ¶¶ 131-136. Game controller 240 includes "**[l]inear motion vibration actuator** 242…in the left handle and **linear motion vibration actuator 244**…in the right handle." *Houston* at [0157] (emphasis added); *see also, id.* at [0018] ("The haptic interface may comprise a pair of **linear motion vibration actuators** that are located in the handles of a hand held controller.") (emphasis added).

147. Since Houston's haptic interface 624 implemented as game controller 240 includes linear motion vibration actuators, it qualifies as *a linear vibration module*.[1]

[1] I have emphasized the claim language for clarity.

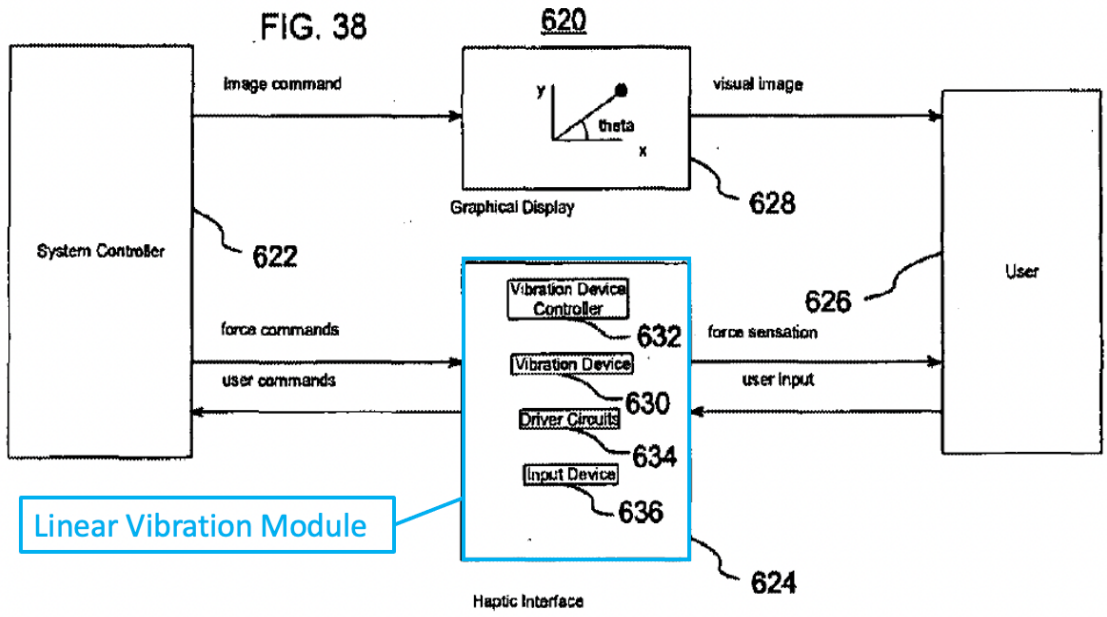

Id. at Fig. 38 (annotated).

(b) *[1(a)] a housing;*

148. For the reasons discussed above, it would have been obvious to implement Houston's haptic interface 624 using Figure 16's game controller 240. *See* ¶¶ 131-136. "FIG. 16 illustrates a vibration device 240 having a pair of actuators 242 and 244." *Houston* at [0157]. "**[V]ibration device housing 250** is configured as a hand held game controller for computer or video games." *Id.* (emphasis added). Thus, housing 250 qualifies as *a housing* of haptic interface 624, which is the claimed *linear vibration module*.

149. For the reasons discussed above, it would have also been obvious to implement each linear motion vibration actuator 242, 244, which are the actuators included in haptic interface 624's vibration device 630, using the linear motion

vibration actuator 100 of Figure 4. *See* ¶¶ 137-140. As shown in Figure 4, the linear motion vibration actuator 100 includes a base 104, which is *a housing* that encloses moving mass 102:

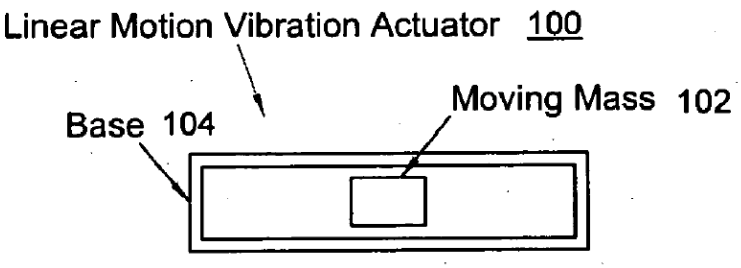

Id. at Fig. 4.

150. Thus, the vibration device housing 250 and the base of each linear motion vibration actuator 242, 244 each individually qualifies as *a housing*:

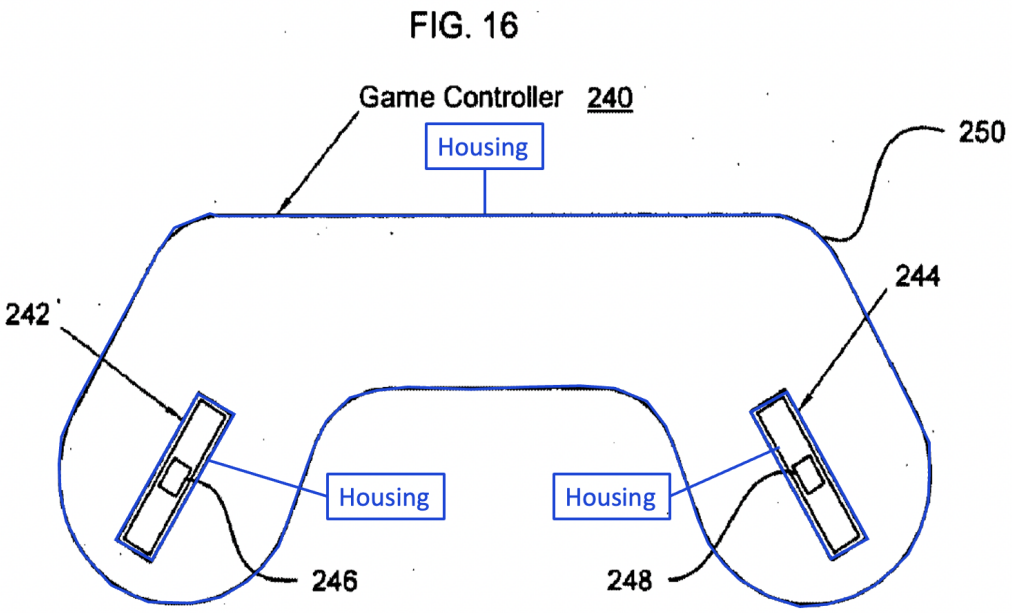

Id. at Fig. 16 (annotated).

(c) *[1(b)] a moveable component;*

151. For the reasons discussed above, it would have been obvious to implement Houston's haptic interface 624 using Figure 16's game controller 240. *See* ¶¶ 131-136. Game controller 240 includes linear motion vibration actuators 242, 244, which "include **moving masses 246 and 248**, respectively." *Houston* at [0157]. With respect to Figure 4, Houston further elaborates that each moving mass "moves relative to the base 104 in a back and forth linear motion." *Id.* at [0112]; *see also*, ¶¶ 137-140. Since moving masses 246, 248 move, each qualifies as *a moveable component*:

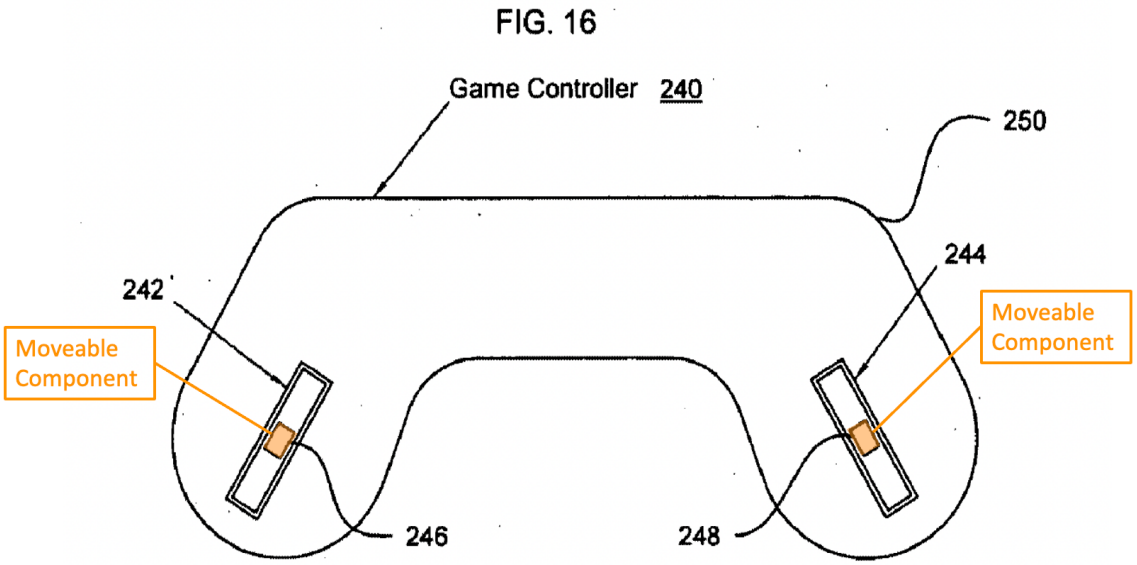

Houston at Fig. 16 (annotated).

(d) *[1(c)] a power supply;*

(i) *Houston Implicitly Teaches "a power supply"*

152. I have been informed that a prior art reference must be considered not only for what it expressly teaches, but also for what it fairly suggests to a POSITA. I have been asked to consider whether Houston implicitly teaches *a power supply*.

153. Houston's haptic interface 624 also includes "a vibration controller 632" and "driver circuits 634 which drive the vibration device actuators[.]" *Houston* at [0214], Fig. 38. For the reasons discussed above, it would have been obvious to a POSITA to implement vibration controller 632 and driver circuits 634 using the components described with respect to system 500 depicted in Figure 31. *See* ¶¶ 141-145. With respect to Figure 31, Houston teaches that the vibration controller "specifies the desired vibration effect and one or more driver circuit(s) 504 a, 504 b, . . . , 504 N **provide the necessary power** to actuators 506a, 506b, . . . , 506N." *Houston* at [0196] (emphasis added); *see also, id.* [0242] ("The driver circuit provides sufficient **current and voltage** to drive the Actuators with the **necessary electrical power**.") (emphasis added). Given these disclosures, a POSITA would reasonably read Houston to understand that the haptic interface 624 implicitly includes *a power supply* to "provide the necessary power to actuators[.]" Indeed, without a power supply, the vibration controller and driver circuits would be unable

to provide any power to the actuators. Thus, Houston fairly suggests *a power supply* as the source of "the necessary power" provided to the actuators.

(ii) *The Combination of Houston and Goldenberg Renders Obvious "a power supply"*

154. Alternatively, and to the extent it is found that *a power supply* is not implicitly taught by Houston, the claimed *power supply* would have been obvious to a POSITA based on the teachings of Goldenberg. Goldenberg teaches "a vibrotactile interface controller," which is an "interface device that outputs vibrations to the user of the device[.]" *Goldenberg* at [0016]. Goldenberg's device includes a power supply 120 "included in or coupled to device 104, and can be coupled to actuator interface 124 and/or actuators 120 and 122 to provide electrical power to the actuators." *Id.* at [0034].

155. As discussed above, Houston teaches providing power to the vibration actuators. Goldenberg teaches an interface device having *a power supply* that provides power to actuators. A POSITA would have understood that a power supply would be incorporated into Houston's haptic interface according to the known methods taught by Goldenberg. A POSITA would have appreciated that incorporating Goldenberg's power supply into Houston's haptic interface would not have changed the haptic interface's function in any way because each element would perform the same function as it does separately. Indeed, a POSITA would have understood that Houston's haptic interface would have required a power supply to

function as described. Including a power supply in Houston's haptic interface would have predictably enabled the driver circuits to supply power to the vibration actuators. Thus, a POSITA would have been motivated to combine the prior art elements of Goldenberg's power supply and Houston's haptic interface according to known methods to yield the predictable result of a haptic interface device that is able to provide power to vibration actuators.

156. A POSITA would have understood that power supplies were well-known and conventional components of user interface devices, such as Houston's haptic interface, well prior to the '081 Patent. *See* ¶¶ 69-70; *see also, e.g., N64 Rumble Pak Manual* at 2 (describing power supply including "two AAA batteries"). Because a power supply would be necessary for Houston's haptic interface to provide power to the actuators and other hardware components, incorporating Goldenberg's power supply into Houston's haptic interface would not have changed principle of operation or rendered it inoperable for its intended purpose. For these reasons, there would have been a reasonable expectation of success incorporating *a power supply* into Houston's haptic interface.

(e) *[1(d)] user-input features;*

157. Houston's haptic interface includes "an input device 636, which can detect user input and which can include buttons, joysticks, and pressure sensors." *Houston* at [0214]; *see also, id.* at [0030] ("[A] game controller is provided, which

comprises a housing, at least one input device disposed in the housing for receiving input from a user[.]"), [0210] ("The user commands can be input through pressing buttons, moving joysticks, squeezing the haptic interface at various level forces, moving the haptic interface, applying force and torque onto the haptic interface and through other means."). I note that the'081 Patent provides examples of "user-input features," including "buttons, sliders, and other types of user-input features." *'081 Patent* at 4:32-36. Therefore, Houston's input device 636 qualifies as the claimed <u>*user-input features*</u> since it also includes buttons and other types of user-input devices:

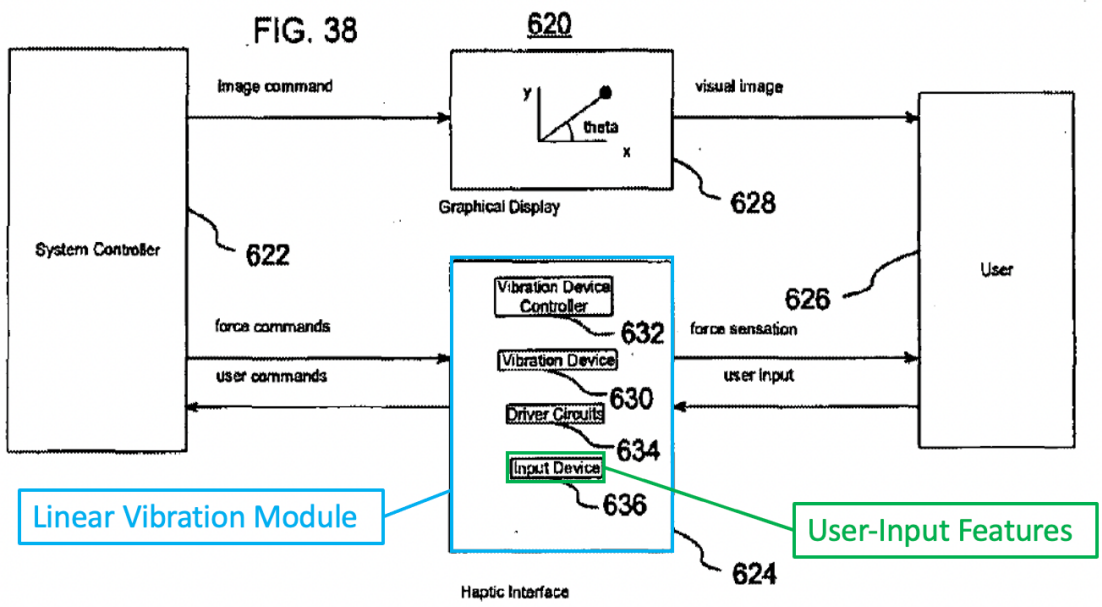

Houston at Fig. 38 (annotated).

(f) *[1(e)] a driving component that drives the moveable component in each of two opposite directions within the housing; and*

158. I have been asked to interpret this limitation as mean-plus-function where "one or more coils or electromagnets" perform the function of "driving the moveable component in each of two opposite directions within the housing." I have applied this interpretation in my analysis below.

159. For the reasons discussed above, it would have been obvious to implement the haptic interface's vibration device 630 using the linear motion vibration actuator of Figure 4. *See* ¶¶ 137-140. Regarding Figure 4, Houston teaches that the linear motion vibration actuator's "base 104 may contain, for instance, a permanent magnet, **an electromagnet**, ferromagnetic material, or any combination of these." *Houston* at [0114] (emphasis added). "Magnetic forces may be generated between base 104 and the moving magnet that **generate acceleration and motion of the moving mass 104**." *Id.* at [0114] (emphasis added). "A force in the linear motion vibration actuator 100 generated with **an electromagnet** can be modulated by controlling the current flowing through the **electromagnet**." *Id*. (emphasis added).

160. Houston provides three example implementations of linear motion vibration actuator 100 where an electromagnet is attached to the base including Figs. 6-8. Figures 6A-B depict "embodiment of the linear motion vibration actuator 100"

including "an **electromagnet** magnet 126 attached to base 124." *Id.* at [0117] (emphasis added). "The **electromagnet 126 is preferably a coil** wound about the x axis." *Id.* (emphasis added). "As shown in the end view of FIG. 6B, in this embodiment the shape of the **electromagnet 12[6]** is tubular and the shape of the permanent magnet is cylindrical." *Id.* (emphasis added).

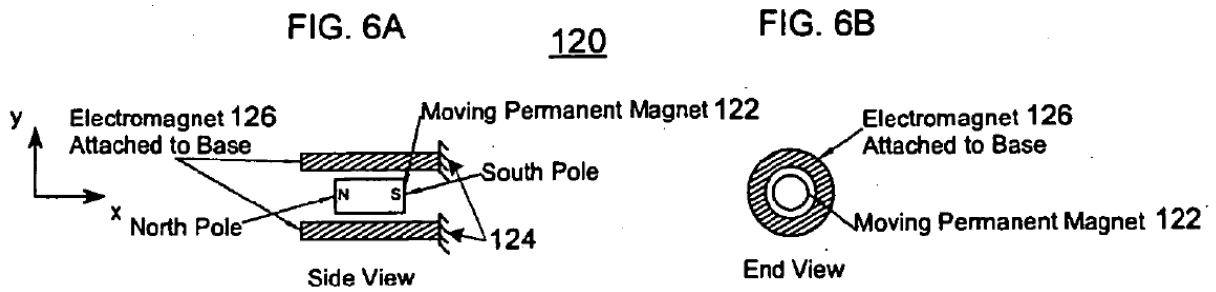

Id. at Figs. 6A-B; *see also, id.* at Figs. 7A-B (depicting electromagnet 136 attached to base), [0119] ("An electromagnet 136 at least partly surrounds the moving mass 132. The electromagnet 136 is desirably connected to the base 134."), 8A-B (depicting electromagnet 146 attached to base), [0121] ("This embodiment is similar to the embodiments shown in FIGS. 6A-B and 7-B in that actuator 140 includes a moving mass 142 including a permanent magnet, a base 144, and an electromagnet 146 coupled to the base 144 and at least partly surrounding the moving mass 142.").

161. Thus, the linear motion vibration actuator's electromagnetic coil is "one or more coils or electromagnets" and meets the structural requirement of this means-plus-function limitation.

162. Houston further teaches that controlling the current in the electromagnetic coil drives the moving mass (i.e., *the moveable component*) *in each of two opposite directions within* the base (i.e., *the housing*):

> The force in the actuator 120 can be modulated by controlling the current in the electromagnet 124. When the current in the electromagnet 124 flows in one direction, then the magnetic force will push the moving mass 122 towards one side of the actuator 120. Conversely when the current in the electromagnet flows in the other direction, then the moving mass 122 will be pushed to the other side of the actuator 120. Increasing the amount of current in the electromagnet will increase the amount of force applied onto the moving mass 122.

Id. at [0118].

163. Because reversing the current in the electromagnetic coil causes the moving mass to move in a back-and-forth linear motion within the actuator housing, the electromagnetic coil performs the function of "driving the moveable component in each of two opposite directions within the housing."

164. Again, I understand that there must be a motivation to make a combination when combining multiple embodiments from a single reference. Here, it would have been obvious, and a POSITA would have been motivated to implement the linear motion vibration actuator 100 using an electromagnetic coil wound about the base, as expressly suggested by Houston in the embodiments of Figs. 6-8. As taught by Houston, a POSITA would have understood that this configuration would

have predictably allowed the controller to control the force and direction of the moving mass by controlling the current applied to the electromagnetic coil.

165. As I described above in the Background of the Prior Art, electromagnetic coils were common components of voice-coil actuators (including moving coil and moving magnet type actuators) well prior to the '081 Patent. *See* ¶¶ 62-68. Because electromagnetic coils were well understood by POSITAs and because an electromagnetic coil is expressly suggested by Houston, there would have been a reasonable expectation of success implementing the linear motion vibration actuator using an electromagnetic coil wound about the base.

(g) *[1(f)] a control component that controls supply of power from the power supply to the driving component to cause the moveable component to oscillate at a frequency and an amplitude specified by user input received from the user-input features.*

166. I have been asked to interpret this limitation as mean-plus-function where an "oscillator circuit; microcontroller with internal or external memory; processor; CPU; microprocessor; and equivalents thereof" perform the function of "controlling supply of power from the power supply to the driving component to cause the moveable component to oscillate at a frequency and an amplitude specified by user input received from the user-input features." I have applied this interpretation in my analysis below.

(i) *Houston Teaches Limitation 1(f)*

167. Figure 38's haptic interface 624 also includes "a vibration controller 632" and "driver circuits 634 which drive the vibration device actuators[.]" *Houston* at [0214], Fig. 38. For the reasons discussed above, it would have been obvious to implement the vibration controller 623 as a microprocessor and the driver circuits 634 as electrical amplifiers or circuits such as H-bridges. *See* ¶¶ 141-145. Thus, Houston teaches that vibration controller 623 is a microprocessor thereby satisfying the structural requirement of this means-plus-function limitation. *Id.*

168. The vibration controller/microprocessor also performs the function of "controlling supply of power from the power supply to the driving component to cause the moveable component to oscillate at a frequency and an amplitude specified by user input received from the user-input features." Specifically, Houston teaches that the vibration controller "specifies the desired vibration effect and one or more driver circuit(s) 504 a, 504 b, . . . , 504 N **provide the necessary power to actuators** 506 a, 506 b, . . . , 506 N." *Houston* at [0196] (emphasis added). The vibration effects specified by the vibration controller include "one or more of the **amplitude of vibration**, $A_{combined}$[,] direction of force, theta, and **frequency of vibration**, f, as described above." *Id.* at [0215] (emphasis added); *see also*, Abstract ("A controller may send signals to one or more driver circuits for directing operation of the actuators. The controller may provide direction and **amplitude** control, vibration

control, and **frequency** control to direct the haptic experience.") (emphasis added), [0198] ("Here the controller 502 specifies the desired **vibration amplitude, A**, **frequency, f**, and phase, p, for each actuator 506.") (emphasis added), Fig. 32.

169. As I discussed above, controlling the direction of the current in the actuator's electromagnetic coil (i.e., *the driving component*) drives the moving mass in each of two opposite directions within the base. *See* Claim 1(e). Specifically, Houston teaches that switching the direction of the current applied to the actuator causes the moving magnet to switch directions. *Houston* at [0118] ("When the current in the electromagnet 124 flows in one direction, then the magnetic force will push the moving mass 122 towards one side of the actuator 120. Conversely when the current in the electromagnet flows in the other direction, then the moving mass 122 will be pushed to the other side of the actuator 120."). Thus, a POSITA would have understood that the frequency at which the current is switched back and forth in the electromagnetic coil corresponds to the frequency of oscillation of the moving mass.

170. Houston also teaches that "[i]ncreasing the amount of current in the electromagnet will increase the amount of force applied onto the moving mass 122." *Houston* at [0118]; Claim 1(e). The '081 Patent discloses that "the amplitude of the vibration and vibrational forces produced are related to … the current applied to the coil[.]" *'081 Patent* at 5:35-39. Additionally, '081 Patent discloses controlling "the

current … used to drive the linear vibration module and to thus increase and decrease the amplitude of vibration produced by the linear vibration module." *Id.* at 11:66-12:3. Like the '081 Patent, Houston teaches controlling the current to control the amount of force applied to the moving mass thereby controlling the amplitude of vibration in the same way as described by the '081 Patent.

171. Thus, both the frequency and amplitude of the moving mass's oscillation are directly controlled by the current applied to the electromagnetic coil, which is, in turn, controlled by the vibration controller/microprocessor.

172. Because Houston teaches that (1) the vibration controller/microprocessor specifies the desired vibration effect (i.e., the frequency and amplitude) so that the driver circuits can provide the necessary power to actuators and (2) the vibration controller/microprocessor controls the current applied to the actuators' electromagnetic coils to produce the desired vibration effect, a POSITA would understand that the vibration controller/microprocessor *controls supply of power from the power supply to the driving component to cause the moveable component to oscillate at a frequency and an amplitude*.

173. Houston further teaches that the frequency and amplitude are *specified by user input received from the user-input features*. Houston teaches "[t]he complete force effect (including **frequency, amplitude**, combined direction of force and torque, and duration of force effect) generated by the vibration device may correlate

events within a graphical computer simulation." *Houston* at [0215] (emphasis added). In an example of a simulation of a user firing a gun, the vibration device controller specifies "the angle theta to represent the direction of a gun firing, the **amplitude of vibration**, $A_{combined}$, to represent the amplitude of the gun recoil, and the **frequency of vibration, f, to represent the frequency of bullets leaving the gun**." *Id.* at [0216] (emphasis added).

174. In another example simulating driving a vehicle, the vibration device controller/microprocessor "specif[ies] the angle theta to represent the direction of vehicle motion, **the frequency of vibration, f, to represent the frequency of vehicle vibration as it drives over bumps in the road or the speed of the vehicle**, and the **amplitude of vibration, $A_{combined}$, to represent the amplitude of bumps in the road**." *Houston* at [0218] (emphasis added).

175. A POSITA would understand that in both of these examples, the frequency and vibration are specified by user input received from the user-input features. In the gun simulation, the frequency of the user pulling the trigger specifies the frequency of vibration representing the frequency of bullets leaving the gun. Thus, the user changes the frequency of vibration by changing the frequency of hitting the "trigger" button on input device 636. The amplitude of the vibration is similarly controlled by the user's input via input device 636 to select a specific gun with a specific recoil. Regarding the driving simulation, user inputs causing the

vehicle to drive over bumps in the road or change the speed of the vehicle specify the frequency of vibration. Likewise, user inputs causing the vehicle to drive over bumps of various sizes specify the amplitude of vibration.

176. Thus, Houston teaches a microprocessor that performs the function of "controlling supply of power from the power supply to the driving component to cause the moveable component to oscillate at a frequency and an amplitude specified by user input received from the user-input features."

177. Alternatively, Houston teaches an embodiment where "[p]arameters such as **frequency**, phase, **amplitude**, duration, and direction can be … input as different patterns suitable for use in gaming, virtual reality and real-world situations." *Id.* at Abstract (emphasis added). For example, "FIG. 36A illustrates a system 550 showing the input of various input parameters of **amplitude**, phase and position (or time) for a pair of linear actuators." *Id.* at [0204] (emphasis added). Figure 36A of Houston also shows that the user enters frequency parameters ω_1 and ω_2 and amplitude parameter a into computer 552:

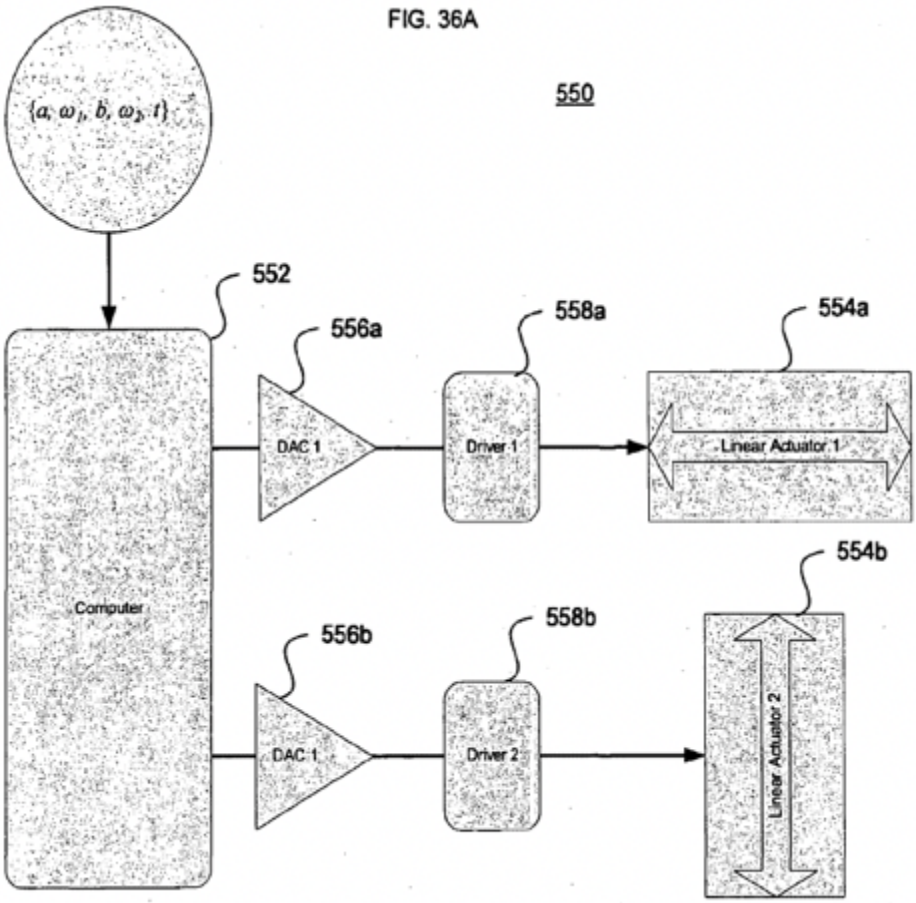

Id. at Fig. 36A; *see also id.* at [0128] ("ω_1 and ω_2 are the respective frequencies of vibration"), [0204] ("A computer 552 receives input of the parameters, which are preferably entered using a computer keyboard (not shown); however, the parameters also could be input using a graphical user interface, analog potentiometers, or many other means generally known to those skilled in the art."), Abstract ("Parameters such as **frequency**, phase, **amplitude**, duration, and direction can be programmed or input as different patterns suitable for use in gaming, virtual reality and real-world situations.") (emphasis added).

178. Houston, therefore, teaches that the user specifies frequency and amplitude via user input features, such as keys, potentiometers, or a graphical user interface.

179. Based on these teachings, it would have been obvious to a POSITA to configure the embodiment of Figure 38 of Houston to allow the user to directly input or select amplitude and frequency parameters via input device 636. A POSITA would have appreciated that the user may wish to customize the haptic feedback for a game or simulation. As such, a POSITA would have been motivated to allow the user to directly enter or select their desired frequency and amplitude parameters into system controller 622 as expressly suggested by Houston. For example, it would have been obvious to configure the system controller 622 to display a graphical user interface on graphical display 620 that allows the user to enter or select their desired frequency and amplitude parameters via the input device 636 of haptic interface 624.

180. A POSITA would have understood that allowing the user to enter or select their desired frequency and amplitude parameters for a game or simulation would have predictably enhanced realism and increased user satisfaction by allowing them to configure haptic feedback to their personal preferences. A POSITA would have appreciated that this modification to system controller 622 would have required only minor software changes to allow the user to provide desired frequency and amplitude parameters. As such, there would have been a reasonable expectation of

success in configuring system controller 622 to accept user inputs for the configuration of the frequency and amplitude parameters.

181. Thus, Houston also renders obvious a microprocessor that performs the function of "controlling supply of power from the power supply to the driving component to cause the moveable component to oscillate at a frequency and an amplitude specified by user input received from the user-input features."

(ii) *The Combination of Houston and Goldenberg Renders Obvious Claim 1(f)*

182. As discussed above, it is my opinion that Houston alone teaches or renders obvious Claim 1(f). *See* ¶¶ 167-181. However, I have also been asked to consider whether the combination of Houston and Goldenberg renders Claim 1(f) obvious in the event it is found that this limitation is not taught or rendered obvious by Houston alone.

183. Goldenberg teaches that "a magnitude and frequency of the vibration can be adjusted independently of each other by adjusting the control signal." *Goldenberg* at Abstract; *see also, id.* at [0059] ("The present inventive method of control allows independent variation of magnitude and frequency of … [an] actuator.").

184. A POSITA would have understood that Goldenberg's magnitude of vibration corresponds to what the '081 Patent refers to as the amplitude of vibration. As shown in the following side-by-side comparison of Goldenberg's Fig. 5 and the

’081 Patent’s Fig. 22A, Goldenberg’s “magnitude” is the same as the ’081 Patent’s “vibrational amplitude”:

Goldenberg Fig. 5

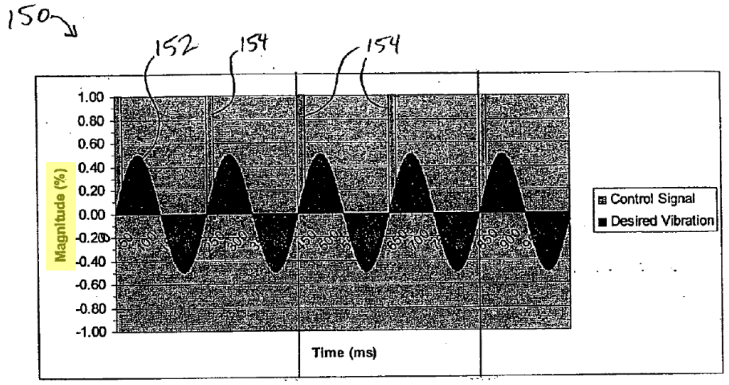

’081 Patent Fig. 22A

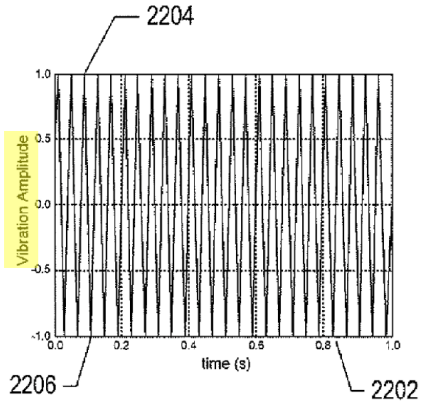

Goldenberg at Fig. 5 (emphasis added); *’081 Patent* at Fig. 22A (emphasis added).

185. Goldenberg teaches that its system “can play a range of **frequencies** at any **amplitude**” and that its “control methods … can be applied not only to rotational motors … but other types of 1 DOF actuators, rotational and **linear, including moving magnet motors**[.]” *Goldenberg* at [0059] (emphasis added). In its control method, a frequency command, a magnitude command, and a function … are supplied as parameters or inputs[.]” *Id*.

186. Mappings of vibrotactile effects to kinesthetic effects are provided in Goldenberg’s system, which are “tailored for the most realism in a particular application.” *Id*. at [0043]-[0044]. “A set of mappings may [] include settings for overall magnitudes provided in ‘control panel’” that “allow the user to **adjust the overall magnitudes of particular force sensations** (or an overall gain of all force

sensations) to a desired level." *Id*. at [0050] (emphasis added); *see also id*. at [0090] ("If condition forces are played … the user should preferably be given the opportunity to … alter them per situation, perhaps in a profiler program presented at the application layer or other software layer on the host computer."), [0095] ("Customers are further able to choose how much haptic feedback functionality and sophistication that want[.]"). The set of mappings can also include settings for "force sensations to maximize the effectiveness of the vibrotactile effects for that type of application program[,]" such as spring forces for a driving game being set to lower magnitude while increasing the amplitude of vibration forces. *Id*. at [0050]. Non-periodic effects, such as the "vibration frequency" for vector forces "can also be user selectable[.]" *Id*. at [0081]. Spring forces are also of a "user-selectable frequency." *Id*. at [0089]. Accordingly, a POSITA would have understood that Goldenberg teaches a user programming mappings for vibrotactile effects, including independently specifying amplitude and frequency.

187. Based on the teachings of Goldenberg, it would have been obvious to a POSITA to use Goldenberg's user-programmed mappings in Houston's device. First, a POSITA would have recognized that Houston and Goldenberg are combinable because both are directed to providing vibration effects in devices, such as game controllers, using linear actuators having moving magnets. *Houston* at

[0002], [0007], [0112]-[0114], [0430], Figs. 4-8B, 16; *Goldenberg* at [0016], [0059], Figs. 1-3.

188. A POSITA would have appreciated that incorporating Goldenberg's user-selected frequency and amplitudes for vibration effects would not have changed Houston's device's function in any way because each element is still performing the same function. A POSITA would have been motivated to use Goldenberg's user-programmed vibration patterns in Houston's device to allow user-selected customization of vibration effects to increase realism and user satisfaction in a particular program, such as a game. Such a modification would have amounted to the application of known programming steps and hardware (Goldenberg's user-selected amplitude and frequency) to a known device ready for improvement (Houston's game controller with user-input features and linear motion vibrator) to obtain a predictable result (increased user control of vibrotactile effects for a particular event in a game). *Houston* at Abstract, [0009]-[0010], [0030], [0210]; *Goldenberg* at Abstract, [0004], [0016], [0050], [0059]-[0081], [0089]-[0090].

189. Given the predictability of computer programming and the teachings of Houston, there would have been a reasonable expectation of success utilizing Goldenberg's vibration customization to enhance the user experience of Houston's game controller.

2. *Claim 2 – The linear vibration module of claim 1 wherein the control component is one of: an variable oscillator circuit with additional control circuitry; and a control component that includes a microprocessor, a control program, stored in an electronic memory within, or separate from, the microprocessor, the control program executed by the microprocessor to control supply of power from the power supply to the driving component to cause the moveable component to oscillate at a frequency and an amplitude specified by user input received from the user-input features.*

190. I have been instructed to interpret this limitation as being "met either by a 'variable oscillator circuit...' or by 'a control component that includes a microprocessor....'" Because of this, I have only analyzed the requirement *wherein the control component is one of: ... a control component that includes a microprocessor, a control program, stored in an electronic memory within, or separate from, the microprocessor, the control program executed by the microprocessor to control supply of power from the power supply to the driving component to cause the moveable component to oscillate at a frequency and an amplitude specified by user input received from the user-input features*.

191. As I discussed above, Houston (or Houston in view of Goldenberg) teaches that vibration controller 632 (i.e., *the control component*) is *a microprocessor* that *control[s] supply of power from the power supply to the driving component to cause the moveable component to oscillate at a frequency and an amplitude specified by user input received from the user-input features*. *See* Claim

1(f). In related art, Goldenberg provides more details on how a local microprocessor in a haptic interface device, such as Houston's, is implemented.

192. Goldenberg teaches a vibrotactile device 104 that includes "a local microprocessor 110" that is "dedicated to haptic feedback and sensor I/O of device 104." *Goldenberg* at [0023]. "Microprocessor 110 can be provided with **software instructions** to wait for commands or requests from host 102, decode or parse the command or request, and handle/control input and output signals according to the command or request." *Id.* (emphasis added). "Microprocessor 110 can receive signals from sensors 112 and provide signals to actuators 120 and 122 in accordance with instructions provided by host computer 102 over bus 108." *Id*. at [0024]. "[H]ost computer 102 provides high level supervisory commands to microprocessor 110 over bus 108, and microprocessor 110 decodes the commands and manages low level force control loops to sensors and the actuator in accordance with the high level commands and independently of the host computer 102." *Id*. at [0025]. "Local **memory**, such as RAM and/or ROM, can be **coupled to microprocessor 110** in device 104 to store instructions for microprocessor 110 and store temporary and other data." *Id.* at [0029] (emphasis added). Thus, Goldenberg teaches a microprocessor coupled to a memory that stores software instructions for the microprocessor. A POSITA would have understood that Goldenberg's software instructions qualify as *a control program* because "software" was a well-known

synonym for a "program" and because Goldenberg's software instructions control the haptic feedback in accordance with high-level commands from the host computer. *Goldenberg* at [0023]-[0024]; *see also, e.g., Microsoft Computer Dictionary* at 489 (defining "software" as "Computer programs; instructions that make hardware work.").

193. Because the memory is coupled to the microprocessor, it is *an electronic memory within, or separate from, the microprocessor*.

194. Based on the teachings of Goldenberg, it would have been obvious, and a POSITA would have been motivated to couple a memory storing a control program to Houston's vibration controller/microprocessor. As discussed above, Houston (or Houston in view of Goldenberg) teaches that vibration controller 632 (i.e., *the control component*) is *a microprocessor* that *control[s] supply of power from the power supply to the driving component to cause the moveable component to oscillate at a frequency and an amplitude specified by user input received from the user-input features*. *See* Claim 1(f). A POSITA would have understood that Houston's vibration controller/microprocessor would need to execute a control program to perform the described functions. A POSITA would have also understood that the control program would need to be stored in an electronic memory so that it could be loaded and executed by the microprocessor. *See e.g., Microsoft Computer Dictionary* at 200

("In programming, execution implies loading the machine code of the program into memory and then performing the instructions.").

195. The claim requires the well-known elements of a microprocessor, a control program that is executed by the microprocessor, and an electronic memory for storing the control program. Houston teaches a microprocessor that performs the claimed function but is silent regarding a memory and control program. Goldenberg teaches a microprocessor that executes software instructions, which are stored in an electronic memory. The only difference between the claim and the prior art is the combination of the known prior art elements into a single device by coupling Goldenberg's electronic memory storing a control program to Houston's microprocessor without a change to the respective functions of either Houston's microprocessor or Goldenberg's memory.

196. A POSITA would have understood that coupling a memory to a microprocessor, via a bus, for example, was well understood and predictable. *See e.g., Microsoft Computer Dictionary* at 77 ("A bus is essentially a shared highway that connects different parts of the system – including the processor, disk-drive controller, memory, and input/output ports – and enables them to transfer information."). Given the predictability and ubiquity of coupling microprocessors to memories storing control programs, there would have been a reasonable expectation of success modifying Houston in this way.

3. *Claim 7 – The linear vibration module of claim 1 wherein the driving component comprises one or more electromagnetic coils that generate magnetic fields parallel to the directions in which the moveable component is driven by the driving component.*

197. As I discussed above, Houston's *driving component comprises one or more electromagnetic coils*. *See* Claim 1(e). Specifically, Houston teaches that the "**electromagnet 126 is preferably a coil** wound about the x axis." *Houston* at [0117] (emphasis added). As I discussed above in the Background of the Prior Art, a coil of wire, such as described by Houston, is also referred to as a solenoid and applying a current to the solenoid generates a magnetic field. *See* ¶ 60. The magnetic field inside a solenoid is governed by Ampère's law. *See e.g., Serway* at 751 ("We can use Ampère's law to obtain an expression for the magnetic field inside an ideal solenoid."). The following figure illustrates the magnetic field in a solenoid:

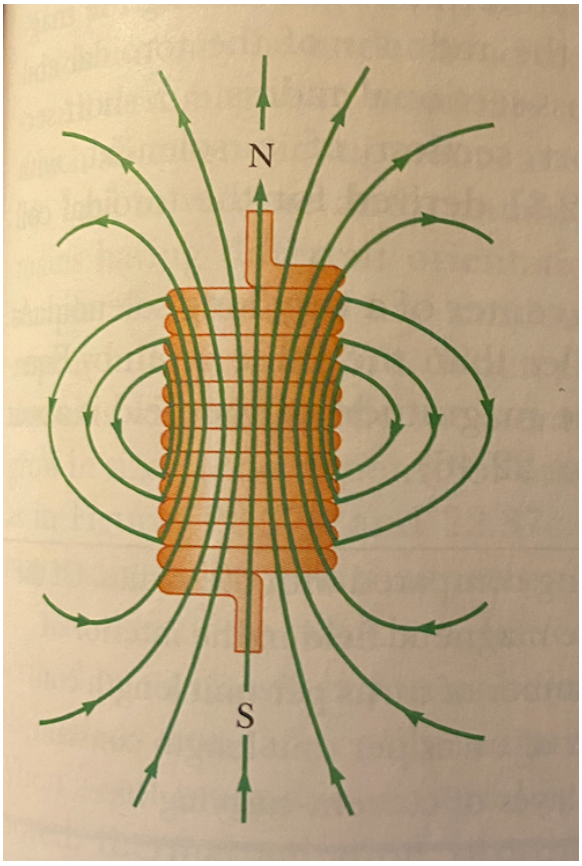

Id. at Fig. 22.34a.

198. Houston further teaches that "[t]he force in the actuator 120 can be modulated by controlling the current in the electromagnet 12[6]." *Houston* at [0118]. "When the current in the electromagnet 124 flows in one direction, then the **magnetic force** will push the moving mass 122 towards one side of the actuator 120." *Id.* (emphasis added). "Conversely when the current in the electromagnet flows in the other direction, then the moving mass 122 will be pushed to the other side of the actuator 120." *Id.*

199. I note that Houston's description of causing the moving mass to oscillate back and forth by switching the direction of the current in the

electromagnetic coil is consistent with the description of the actuator described in the ’081 Patent with regard to Figures 4B-G. *’081 Patent* at 5:5-34, Figs. 4B-G; *see also*, ¶¶ 35-38.

200. I have been informed that the inherent disclosures of a prior art reference may be relied upon for an obviousness analysis. I understand that the fact that a claim limitation may be present in the prior art is not sufficient to establish the inherency. Rather, the limitation must be necessarily present in the reference. I further understand that a limitation is inherent if it is the natural result flowing from the prior art’s explicit disclosure.

201. Applying Ampère’s law, POSITA would have understood that when the current is moving in one direction in the electromagnetic coil 126, a magnetic field is generated that causes the mass to move in a first direction (e.g., left), and when the current is reversed, a magnetic field is generated that causes the mass to move in the opposite direction (e.g., right). In other words, the direction of the magnetic field inside electromagnetic coil 126 is a natural result of the basic laws of physics. As shown in the annotated figures below, the *magnetic fields* inside electromagnetic coil 126 are necessarily *parallel to the directions in which the moveable component is driven by the driving component* per Ampère’s law:

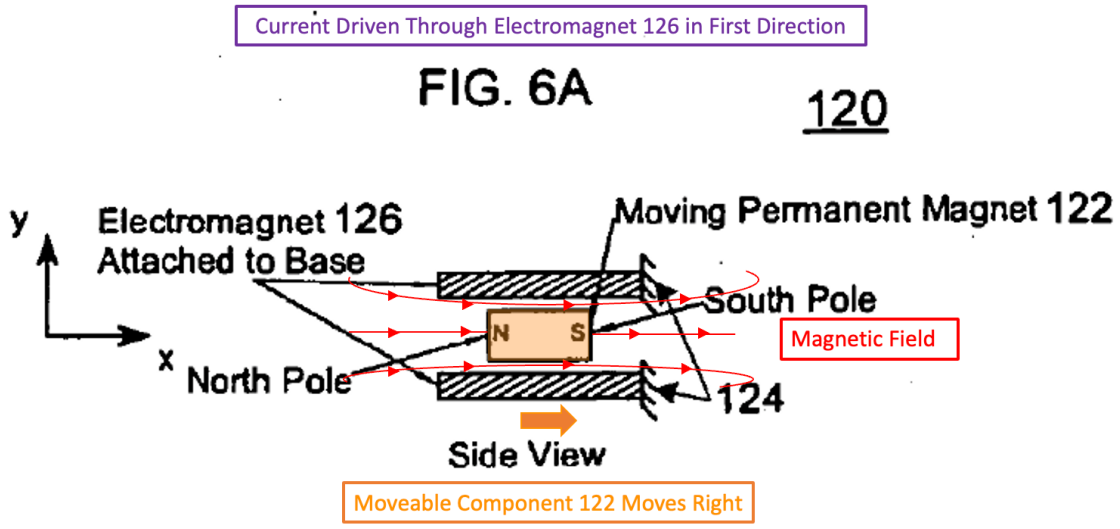

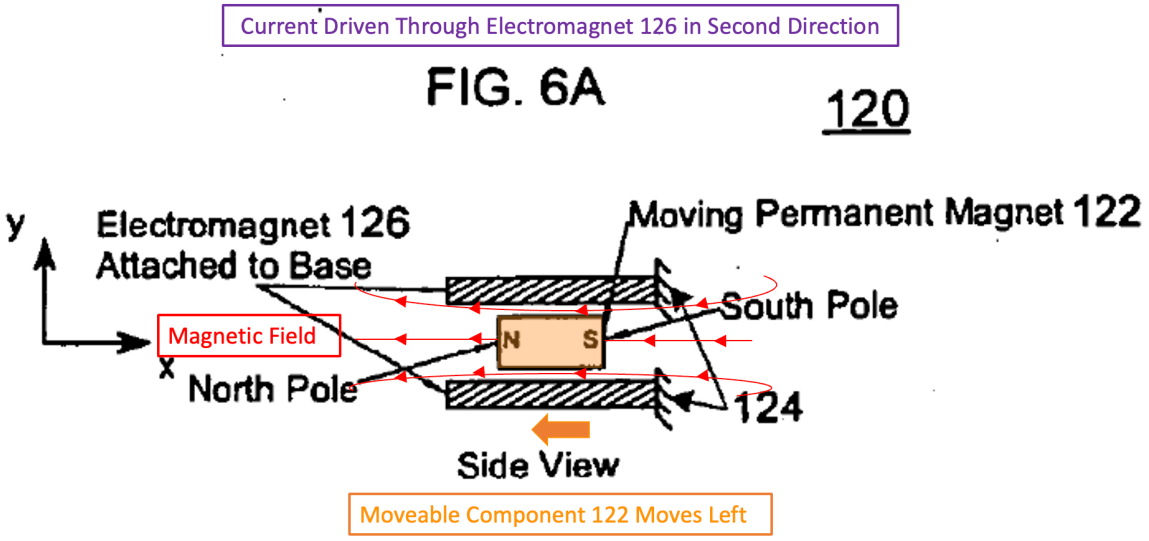

Id. at Fig. 6A (annotated).

4. *Claim 8 – The linear vibration module of claim 1*

(a) *[8(a)] wherein the housing is a linear tube, capped at both ends by movable-component-repelling components selected from one of mechanical springs and magnets;*

202. As I discussed above, Houston's Figures 5-8 represent different embodiments of Figure 4's linear motion vibration actuator 100. *See* ¶ 140. As I also

discussed above, the base of Houston's linear motion vibration actuator qualifies as *the housing*. *See* Claim 1(a).

203. Houston teaches or renders obvious that the base (i.e., *the housing*) *is a linear tube*. Houston teaches that the embodiment "shown in FIGS. 7A-B … is similar to the embodiment shown in FIGS. 6A-B." *Houston* at [0119]. Likewise, Houston teaches that the embodiment of Figures 8A-B "is similar to the embodiments shown in FIGS. 6A-B and 7[A]-B in that actuator 140 includes a moving mass 142 including a moving magnet, a base 144, and an electromagnet 146 coupled to the base 144 and at least partly surrounding the moving mass 142." *Id.* at [0121]. In the embodiment of Figure 6, an electromagnet 126 is attached to base 124 and "the shape of the electromagnet 12[6] is **tubular** and the shape of the permanent magnet is cylindrical." *Id.* at [0117] (emphasis added). As shown in Figures 6A-B, 7A-B, and 8A-B, all these embodiments include a base (i.e., *housing*) that *is a linear tube* (along the X-axis) as required by the claim:

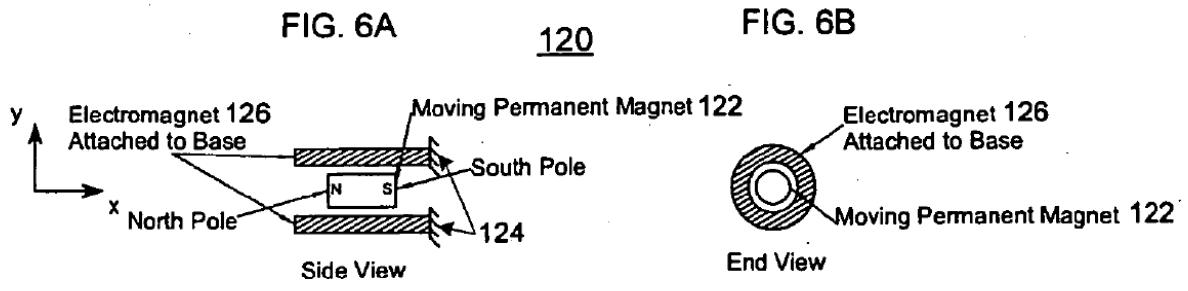

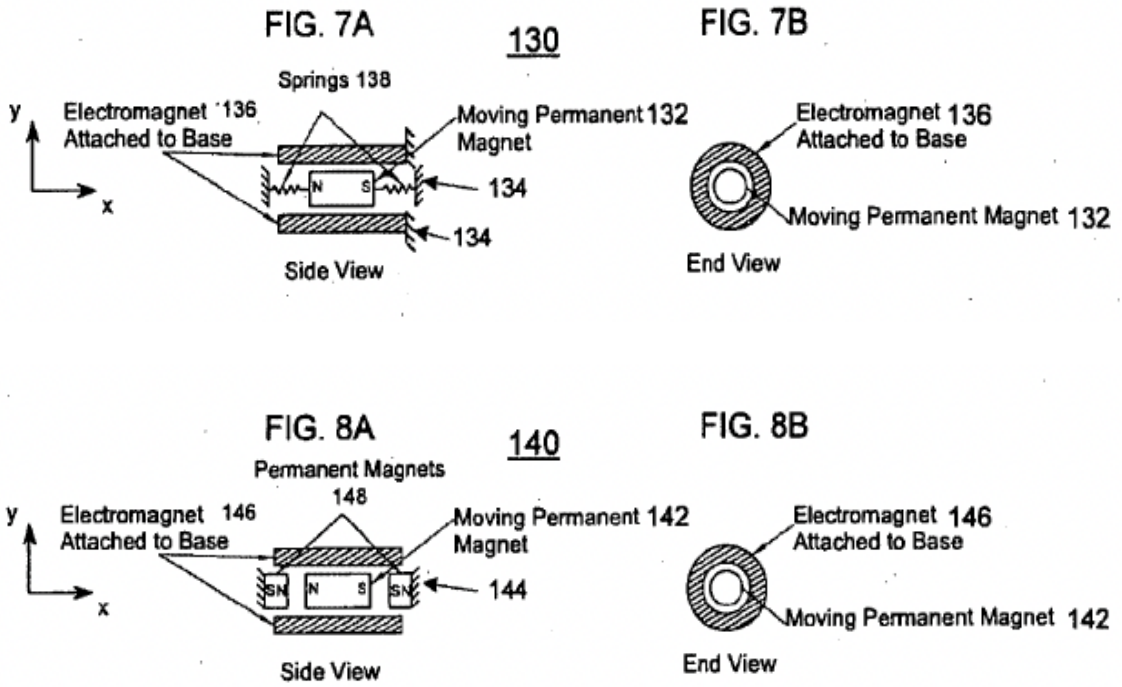

Id. at Figs. 6A-B, 7A-B, 8A-B.

204. The embodiments of Figures 7 and 8 further teach that the base/housing is *a linear tube, capped at both ends by movable-component-repelling components selected from one of mechanical springs and magnets*. Regarding Figure 7, Houston teaches that "the actuator 130 in this embodiment preferably includes one or more **springs 138** that are attached to the base 134 and to the moving magnet 132 **at either end**, as shown in the side view of FIG. 7A." *Id.* at [0119] (emphasis added). "The springs 138 are operable to generate forces in a direction **that returns the moving mass 132 to a center position**, for instance midway between either end of the electromagnet 136." *Id.* (emphasis added). "The springs 138 function to keep the moving mass 132 close to the center position when the actuator power is off, and to

provide a restoring force when the moving mass 132 is at one end of travel of the actuator 130." *Id.* at [0120]. Thus, the embodiment of Figure 7 teaches that the base 134 is <u>*capped at both ends by moveable-component-repelling components*</u> – namely springs 138 (i.e., <u>*mechanical springs*</u>) – that repel the moving mass (i.e., <u>*the moveable component*</u>) to a center position:

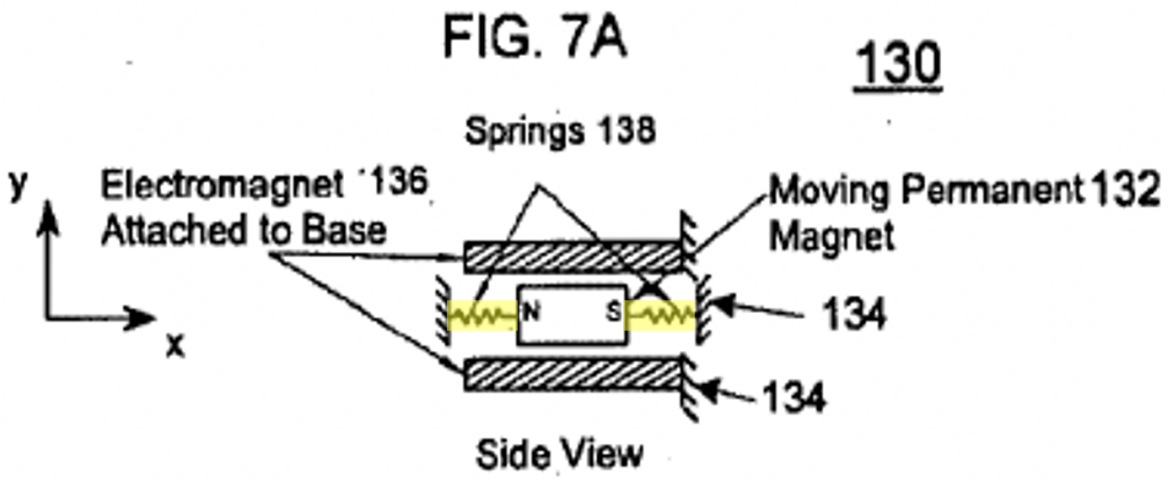

Id. at Fig. 7A (emphasis added).

205. The embodiment of Figure 8 includes "a **pair of permanent magnets 148** … attached to the base and … in operative relation to the moving magnet 142 at either end as shown in the side view of FIG. 8A." *Id.* at [0121] (emphasis added). "The permanent magnets 148 have poles, as shown by the N and S in FIG. 8A, which are configured to **repel the moving mass 142** and to generate forces in a direction that **returns the moving mass 142 to a center position**." *Id.* (emphasis added). "The permanent magnets 148 function to keep the moving mass 142 close to a center

position when the actuator power is off, and to provide a restoring force when the moving mass 142 is at one end of travel of the actuator 140." *Id.* Thus, the embodiment of Figure 8 teaches that the base is *capped at both ends by moveable-component-repelling components* – namely permanent *magnets* 148 – that repel the moving mass (i.e., *the moveable component*) to a center position:

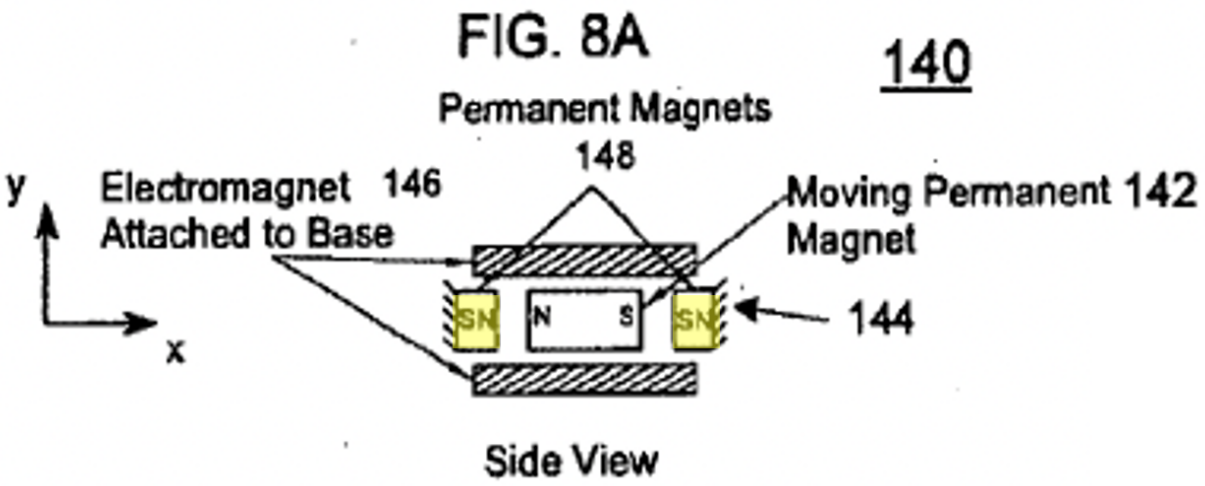

Id. at Fig. 8A (emphasis added).

206. It would have been obvious to a POSITA to implement Houston's linear actuator using either of the implementations shown in Figures 7 and 8. Houston teaches that "the components of the haptic interface 624 [i.e., *the linear vibration module*] may be of **any of the configurations** described herein." *Houston* at [0214] (emphasis added). A POSITA would have understood that both implementations would have advantageously provided a restoring force that would cause the moving mass to be returned to the center of the base/housing. *Houston* at [0120] ("The

springs 138 function to keep the moving mass 132 close to the center position when the actuator power is off, and to provide a restoring force when the moving mass 132 is at one end of travel of the actuator 130."), [0121] ("The permanent magnets 148 function to keep the moving mass 142 close to a center position when the actuator power is off, and to provide a restoring force when the moving mass 142 is at one end of travel of the actuator 140."). Likewise, a POSITA would have understood that, due to the costs associated with magnets, implementing the actuator using springs 138, as suggested by the embodiment of Figure 7, would have been cheaper than implementing the actuator using magnets 148, as suggested by the embodiment of Figure 8. *See e.g.*, *Davey* at 1429 (referencing "the high cost of magnets"). Thus, a POSITA would have been motivated to utilize the embodiment of Figure 7 in situations where the design goal is to keep costs down.

207. However, as noted by Houston, "[u]se of repulsive magnetic forces as shown in FIG. 8A to generate centering forces on the moving permanent magnet of the moving mass 142 can **provide lower friction** than use of springs 138 as shown in FIG. 7A, and thus can **generate increased actuator efficiency and smoothness**." *Houston* at [0122] (emphasis added). Thus, a POSITA would have been motivated to utilize the embodiment of Figure 8 in situations where the design goal is to create an actuator with increased efficiency and smoothness. As such, a POSITA would have been motivated to implement the vibration device 630 as either of the

embodiments of Figures 7 and 8, as expressly suggested by Houston, depending on the design objectives of the POSITA.

208. Springs and magnets were well-understood at the time of the '081 Patent. *See e.g., Serway* at 163 (describing Hooke's law and the behavior of springs), 728 (describing the first use of magnets as early as the 13th century B.C.). As such, there would have been a reasonable expectation of success configuring Houston's haptic interface 624 to include either of these linear actuators.

(b) *[8(b)] wherein the movable component is a magnet shaped to slide within the linear tube; and*

209. For the reasons discussed above, it would have been obvious to a POSITA implement Houston's linear actuator using either of the implementations shown in Figures 7 and 8. *See* Claim 8(a). In both the embodiments of Figures 7 and 8, *the movable component is a magnet shaped to slide within the linear tube*. Specifically, Houston teaches that the embodiment "shown in FIGS. 7A-B … is similar to the embodiment shown in FIGS. 6A-B." *Houston* at [0119]. Likewise, Houston teaches that the embodiment of Figures 8A-B "is similar to the embodiments shown in FIGS. 6A-B and 7[A]-B in that actuator 140 includes a moving mass 142 including a moving magnet, a base 144, and an electromagnet 146 coupled to the base 144 and at least partly surrounding the moving mass 142." *Id.* at [0121]. In the embodiment of Figure 6, the moving mass is a permanent magnet, "and the shape of the permanent magnet is cylindrical." *Id.* at [0117]. As shown in

Figures 6A-B, 7A-B, and 8A-B, all these embodiments include cylindrical moving magnet shaped to slide within the linear tube of base/housing as required by the claim:

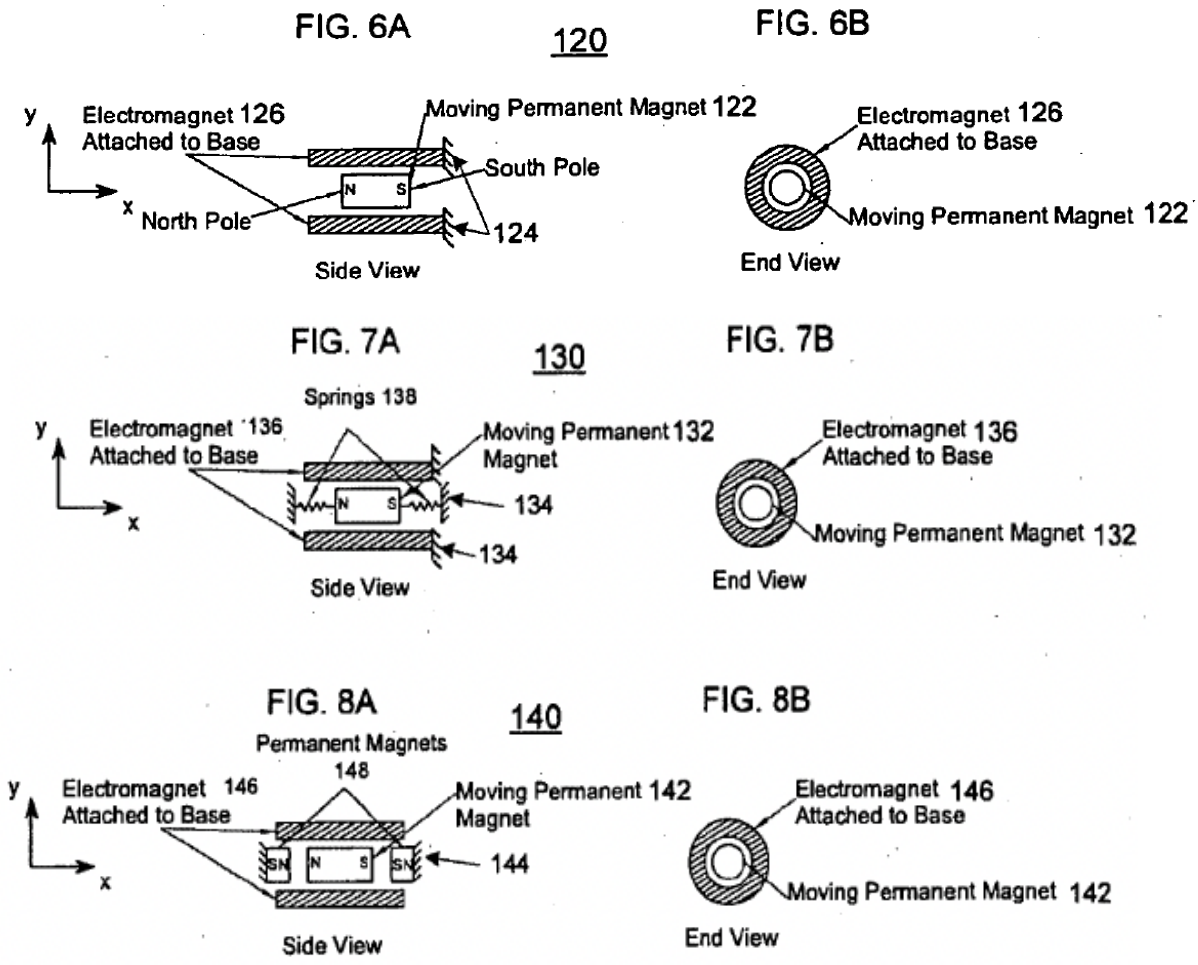

Id. at Figs. 6A-B, 7A-B, 8A-B.

210. Thus, it would have been obvious to a POSITA to implement Houston's linear actuator using either of the implementations shown in Figures 7 and 8, including the cylindrical moving magnet shaped to slide within the linear tube of

base/housing, for the same reasons as discussed with regard to the previous limitation. *See* Claim 8(a).

(c) *[8(c)] wherein the driving component is an electromagnetic coil.*

211. As I discussed above, Houston teaches that *the driving component is an electromagnetic coil*. *See* Claim 1(e).

5. *Claim 17 – The linear vibration module of claim 1 wherein the control component controls supply of power from the power supply to the driving component to cause the moveable component to oscillate at a frequency and an amplitude that are independently specified by user input received from the user-input features.*

212. As discussed with respect to Claim 1(f), Houston in view of Goldenberg teaches *the control component controls supply of power from the power supply to the driving component to cause the moveable component to oscillate at a frequency and an amplitude that are independently specified by user input received from the user-input features*. *See* Claim 1(f); *see also, Goldenberg*, Abstract ("a magnitude and frequency of the vibration can be adjusted **independently** of each other by adjusting the control signal."), [0059] ("The present inventive method of control allows **independent** variation of magnitude and frequency of … [an] actuator."). As I noted above, Goldenberg's magnitude of vibration is the same as the '081 Patents amplitude of vibration. *See* ¶ 184.

I. Ground 2: Claims 3-6 are obvious over Houston, Goldenberg, and Ibuki

1. *Claim 3 – The linear vibration module of claim 1 wherein the control component receives output signals from sensors within the linear vibration module during operation of the linear vibration module and adjusts one or more operational control outputs of the control component according to the received output signals from the sensors.*

213. I have been asked to interpret this limitation as mean-plus-function where an "oscillator circuit; microcontroller with internal or external memory; processor; CPU; microprocessor; and equivalents thereof" perform the function of "receiving output signals from sensors within the linear vibration module during operation of the linear vibration module and adjusts one or more operational control outputs of the control component according to the received output signals from the sensors." I have applied this interpretation in my analysis below.

214. As I discussed above, Houston teaches that vibration controller 623 is a microprocessor thereby satisfying the structural requirement of this means-plus-function limitation. *See* Claim 1(f). Houston also teaches that the vibration controller/microprocessor (i.e., *the control component*) outputs *one or more operational control outputs* including "one or more of the amplitude of vibration, $A_{combined}$[,] direction of force, theta, and frequency of vibration, f, as described above." *Houston* at [0215]; *see also*, Claim 1(f).

215. In related art, Ibuki teaches a vibrating linear actuator that includes sensors for detecting the amplitude and frequency of a moving portion 2. Specifically, "moving portion 2 is equipped with a sensing magnet 29, and the frame 3 is equipped with a sensor coil 39 in which voltage is induced by movement of the sensing magnet 29." *Ibuki* at 4:29-32. The output signal from the sensor coil 39 feeds into an amplitude detector 12 and a frequency detector 14:

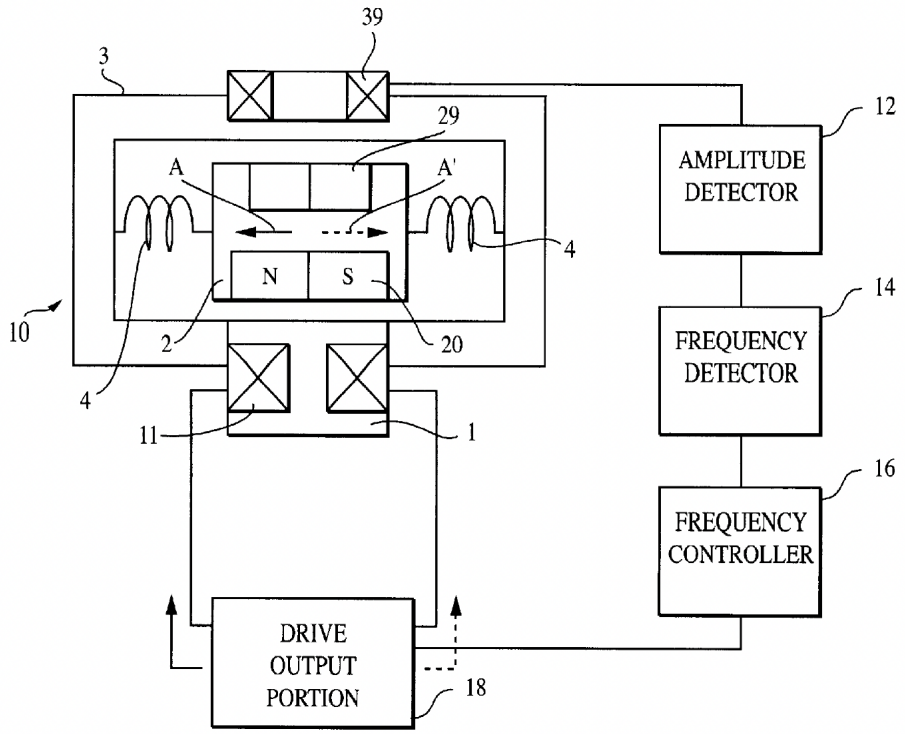

Id. at Fig. 3; *see also, id.* at 4:62-65 ("[A]s shown in FIG. 3, the natural frequency f0 is detected by detecting the amplitude using an amplitude detector 12, and detecting the frequency from the output of the sensor 39, using a frequency detector 14.").

216. The amplitude detector 12 is a sensor that "detects a signal corresponding to an amplitude of the moving portion 2" and "is operably connected to the frequency detector 14 and the frequency controller 16." *Id.* at 8:5-9. Frequency detector 14 is also a sensor that "detect[s] a natural frequency of a spring vibration system made of the spring and the moving portion 2[.]" *Id.* at 7:60-63. According to Ibuki, "If the drive frequency f is identical to the natural frequency f0, the amplitude reaches maximum, and the current reaches a minimum value, as shown in FIG. 5." *Id.* at 5:8-10. "However, when the drive frequency f is higher or lower than the natural frequency f0, the amplitude decreases, and the drive current increases." *Id.* at 5:10-13.

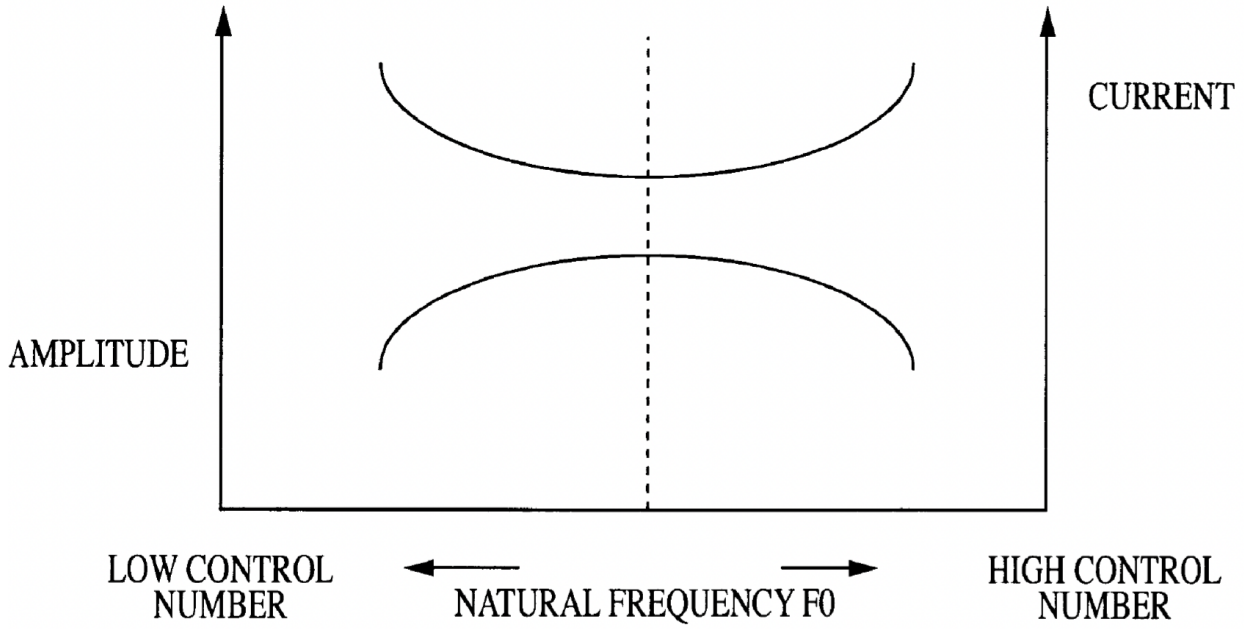

Id. at Fig. 5.

217. Ibuki teaches *the control component receives output signals from sensors within the linear vibration module during operation of the linear vibration module*. As shown in Figure 5 above, frequency controller 16 is connected to the frequency detector 14, and Ibuki also teaches that "amplitude detector 12 is operably connected to the frequency detector 14 and the frequency controller 16." *Id.* at Fig. 5, 8:7-8. Based on the output signals received from the frequency and amplitude sensors, "the frequency controller is further configured to determine (i.e., set) a drive frequency by deriving the natural frequency from a variation of an amplitude value while incrementally altering the frequency of the current pulse to be supplied to the coil." *Id.* at 2:19-23. As shown in the processing steps of Figure 1, the frequency controller decrements (S4) or increments (S9) the drive frequency Fn based on measured amplitude values and outputs a corresponding drive pulse (S5):

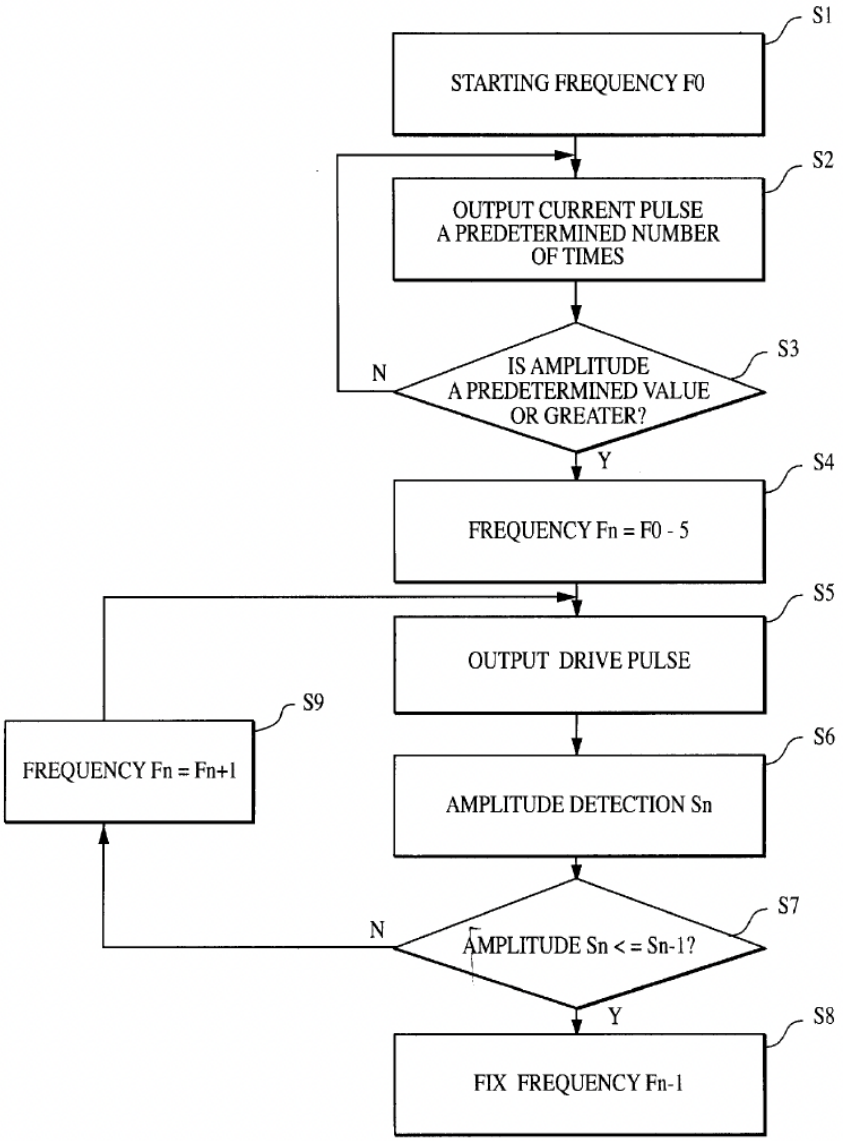

Id. at Fig. 1; *see also, id.* at 5:29-53.

218. The controller incrementally adjusts the drive frequency/output drive pulse until "the amplitude value reaches its maximum," which signifies that the drive frequency has reached the natural frequency. *Id.* at 2:18-24; *see also, id.* at 5:8-9 ("If the drive frequency f is identical to the natural frequency f0, the amplitude reaches maximum…"). In other words, the controller adjusts the output drive pulse

according to the received output signals from the amplitude and frequency sensors until the moving component reaches the natural frequency. Ibuki teaches that this allows the actuator to "vibrate the spring vibration system at its natural frequency without being affected by a variation of the spring vibration system" and "has a high drive efficiency and low cost." *Id.* at 7:66-8:4. Thus, Ibuki's controller performs the function of "receiving output signals from sensors within the linear vibration module during operation of the linear vibration module and adjusts one or more operational control outputs of the control component according to the received output signals from the sensors."

219. Like Ibuki, Houston teaches an embodiment where "both the first actuator and the second actuator are preferably operated at substantially a natural frequency of the respective actuator." *Houston* at [0036]; *see also, id.* at [0120] ("The stiffness of the springs 138 can be selected so that the natural frequency of the actuator 130 increases the amplitude of vibration at desired natural frequencies."). However, Houston does not discuss whether any feedback control is utilized to ensure that the actuator is oscillating at a natural frequency.

220. It would have been obvious to a POSITA to modify Houston's haptic interface (i.e., *the linear vibration module*) to utilize Ibuki's feedback control technique to ensure that the frequency of vibration, f (i.e., *operational control output*) corresponds to the actuator's natural frequency. As discussed above, Ibuki

teaches that vibrating the system at its natural frequency increases drive efficiency and lowers power consumption. *Ibuki* at 1:49-54. Like Ibuki's actuator, Houston also teaches an implementation where the actuator includes "springs 138 [that] are operable to generate forces in a direction that returns the moving mass 132 to a center position[.]" *Houston* at [0119]; *see also, id.* at Fig. 7A. A POSITA would recognize that, as taught by Ibuki, springs 138 would introduce variations into the system that would affect the natural frequency. To address this issue, it would have been obvious to modify Houston's vibration controller/microprocessor to receive output signals from amplitude and frequency sensors within the actuator during the operation of the linear vibration module and configure software instructions executing on the microprocessor to adjust the frequency of vibration, f (i.e., *one or more operational control outputs of the control component*) until the amplitude value reaches it maximum thereby ensuring that the drive signal frequency corresponds to the actuator's natural frequency.

221. Ibuki teaches that vibrating the actuator at the natural frequency increases drive efficiency by imparting larger vibration to the user using less drive power. Thus, a POSITA would have been motivated to improve similar actuators in the same way by utilizing Ibuki's feedback control technique to yield the predictable result of ensuring that Houston's microprocessor outputs a frequency of vibration that corresponds to the natural frequency despite any variations in the system.

222. A POSITA would have understood that closed-loop feedback control systems, such as taught by Ibuki, were conventional in electronic circuit design for decades prior to the invention of the ’081 Patent, and that there were particular advantages over open-loop approaches. *See e.g., Oppenheim* at 816 (“It has long been recognized that in many situations there are particular advantages to be gained by using feedback – that is, by using the output of a system to control or modify the input. For example, it is common in electromechanical systems, such as a motor whose shaft position is to be maintained at a constant angle, to measure the error between the desired and the true position and to use this error in the form of a signal to turn the shaft in the appropriate direction.”). Thus, there would have been both a motivation and a reasonable expectation of success configuring Houston’s haptic interface to perform Ibuki’s feedback control technique.

2. *Claim 4 – The linear vibration module of claim 1 wherein the control component adjusts the one or more operational control outputs of the control component according to the received output signals from the sensors in order that subsequent operation of the linear vibration module produces desired outputs from the one or more sensors corresponding to one or more operational control parameters.*

223. I have been instructed to interpret Claim 4 as depending from Claim 3 and as a means-plus-function limitation where the “same structure as described above with respect to claim 3” performs the function of “adjusting the one or more operational control outputs of the control component according to the received

output signals from the sensors in order that subsequent operation of the linear vibration module produces desired outputs from the one or more sensors corresponding to one or more operational control parameters." I have applied this interpretation in my analysis below.

224. For the same reasons discussed with regard to Claim 3, Houston modified in view of Ibuki teaches that the vibration controller/microprocessor (i.e., *the control component*) adjusts the vibration frequency, f (i.e., *the one or more operational control outputs of the control component*) according to the received output signals from the amplitude and frequency sensors in order that subsequent operation of the linear vibration module produces desired outputs from amplitude and frequency sensors corresponding to the amplitude and drive frequency value (i.e., *one or more operational control parameters*). *See* Claim 3.

3. *Claim 5 – The linear vibration module of claim 4 wherein the one or more operational control parameters is a strength of vibration produced by the linear oscillation of the moveable component; and wherein the one or more operational control outputs is a frequency at which the control component drives the moveable component to linearly oscillate, the control component dynamically adjusting the power supplied to the driving component to produce linear oscillation of the movable component at a resonant frequency for the linear vibration module.*

225. I have been asked to interpret this limitation as mean-plus-function where an "oscillator circuit; microcontroller with internal or external memory; processor; CPU; microprocessor; and equivalents thereof" perform the function of

"dynamically adjusting the power supplied to the driving component to produce linear oscillation of the movable component at a resonant frequency for the linear vibration module." I have applied this interpretation in my analysis below.

226. Regarding *a strength of vibration produced by the linear oscillation of the moveable component*, the '081 Patent discloses "a strength of vibration…corresponds to the current applied to the coil[.]" *'081 Patent* at 6:22-23. The '081 Patent also discloses that "the amplitude of the vibration and vibrational forces produced are related to," among other things, "the current applied to the coil[.]" *Id.* at 5:35-38. A POSITA would have understood that if *a strength of vibration* corresponds to the current applied to the coil and the amplitude of vibration also corresponds to the current applied to the coil, then the strength of vibration corresponds to the amplitude of vibration per the transitive property.

227. Houston teaches that the vibration controller/microprocessor (i.e., *the control component*) outputs *one or more operational control outputs,* including "one or more of the **amplitude of vibration, $A_{combined}$**[,] direction of force, theta, and **frequency of vibration, f**, as described above." *Houston* at [0215] (emphasis added); *see also*, Claim 1(f). Houston further teaches that "[i]ncreasing the amount of current in the electromagnet will increase the amount of force applied onto the moving mass 112." *Houston* at [0116]. Thus, Houston teaches *the one or more*

operational control parameters is a strength of vibration produced by the linear oscillation of the moveable component.

228. Houston also teaches *the one or more operational control outputs is a frequency at which the control component drives the moveable component to linearly oscillate*. *Houston* at [0215] (describing vibration controller outputting "frequency of vibration, f"). Houston also teaches an embodiment where "both the first actuator and the second actuator are preferably operated at substantially a natural frequency of the respective actuator." *Id.* at [0036]. Ibuki confirms that the natural frequency is "a resonance frequency." *Ibuki* at 1:20-24.

229. For the same reasons as discussed with regard to Claim 3, the combination of Houston and Ibuki teaches the microprocessor (i.e., *the control component*) dynamically adjusts the current (i.e., *power*) supplied to the electromagnetic coil (i.e., *the driving component*) to produce linear oscillation of the moving mass (i.e., *the movable component*) at a drive frequency corresponding to the natural/resonant frequency for the haptic interface (i.e., *the linear vibration module*). *See* Claim 3.

4. *Claim 6 – The linear vibration module of claim 4*

(a) *[6(a)] wherein the one or more operational control parameters include both a strength of vibration produced by the linear oscillation of the moveable component and a current operational mode; and*

230. Houston teaches an embodiment where the user inputs "various **input parameters** include[ing] input of **pattern number, amplitude**, duration and start-time for the vibration device using compound vibrations." *Houston* at [0208] (emphasis added). According to Houston, these input parameters "produce an extremely broad and rich set of haptic sensations for the end user." *Id*.

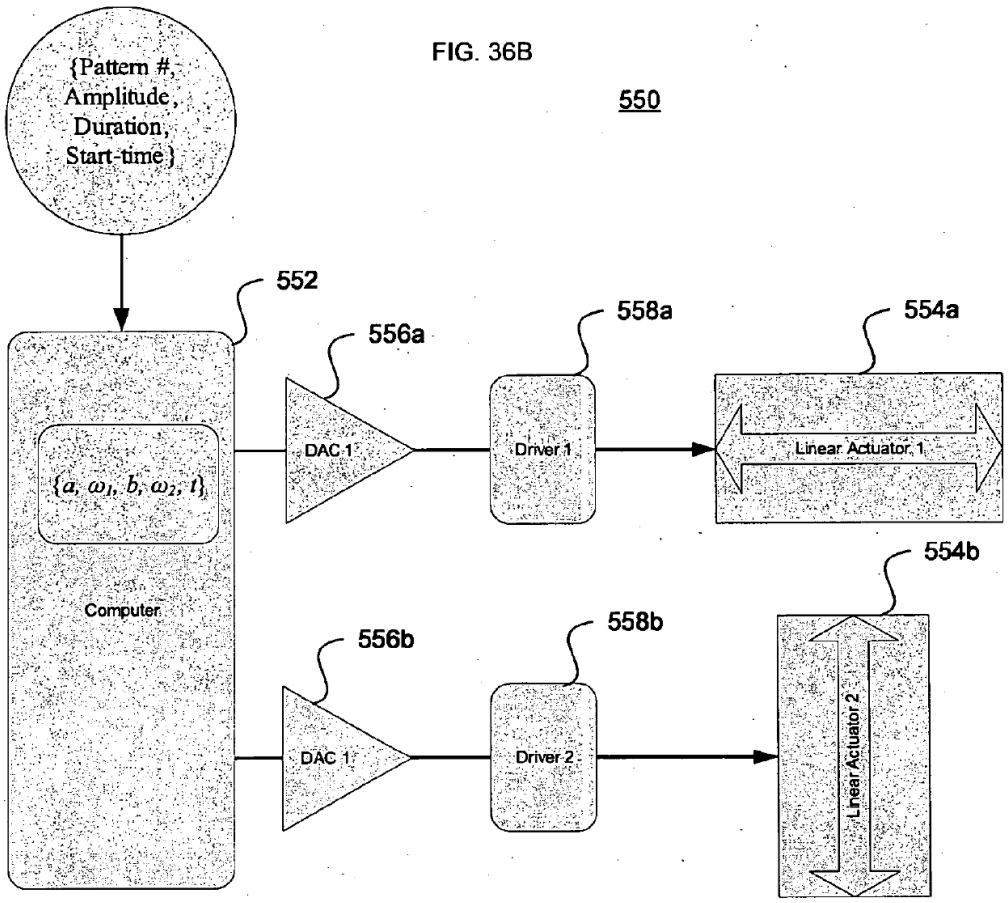

Id. at Fig. 36B.

231. For the reasons discussed above, the amplitude corresponds to *a strength of vibration*. *See* Claim 5. Thus, Houston's amplitude input parameter corresponds to *a strength of vibration operational control parameter*.

232. Regarding the pattern number input parameter, Houston teaches "generating precise patterns of vibrations from simple parameters," including "circles, ellipses and straight lines." *Houston* at [0207]. This is similar to the '081 Patent's description of operational modes. For example, the '081 Patent discloses "that processor or microprocessor control allows for an essentially limitless number of different **vibrational behaviors and modes**[.]" *'081 Patent* at 13:5-7 (emphasis added); *see also, id.* at 10:53-57 ("[A] processor or microcontroller within a linear-resonant vibration module allows for a very large number of different processor-controlled **vibration patterns and modes** to be exhibited by the linear-resonant vibration module.") (emphasis added). Thus, Houston's vibration patterns correspond to *operational modes*, and the pattern number input parameter corresponds to *a current operational mode operational control parameter* within the meaning of the '081 Patent.

233. It would have been obvious, and a POSITA would have been motivated to configure Houston's haptic interface to allow the user to directly input or select operational control parameters, including a pattern number and amplitude, as

expressly suggested by Houston. A POSITA would have understood that allowing the user to enter their desired pattern and amplitude parameters for a game or simulation would have predictably enhanced realism and increased user satisfaction by allowing them to configure haptic feedback to their personal tastes. As noted by Houston, allowing the user to input these parameters would have predictably "produce[d] an extremely broad and rich set of haptic sensations for the end user." *Houston* at [0208]. A POSITA would have appreciated that this modification to system controller 622 would have required only minor software changes to allow the user to provide the desired pattern number and amplitude parameters. As such, there would have been a reasonable expectation of success configuring system controller 622 to accept user inputs for the configuration of the pattern number and amplitude parameters.

> (b) *[6(b)] wherein the one or more operational control outputs is a control output that determines a current supplied by the power supply to the driving component and a frequency at which the control component drives the moveable component to linearly oscillate.*

234. Houston teaches that the vibration controller outputs <u>*one or more operational control outputs*</u> including "one or more of the **amplitude of vibration, $A_{combined}$**[,] direction of force, theta, and **frequency of vibration, f**, as described above." *Houston* at [0215] (emphasis added); *see also*, Claims 1(f), 3. The frequency

of vibration, f, is *a frequency at which the control component drives the moveable component to linearly oscillate*. *See* Claim 1(f).

235. Houston also teaches that "[i]ncreasing the amount of current in the electromagnet will increase the amount of force applied onto the moving mass 122." *Houston* at [0118]; Claim 1(e). The '081 Patent discloses that "the amplitude of the vibration and vibrational forces produced are related to … the current applied to the coil[.]" *'081 Patent* at 5:35-39. Additionally, the '081 Patent discloses controlling "the current … used to drive the linear vibration module and to thus increase and decrease the amplitude of vibration produced by the linear vibration module." *Id.* at 11:66-12:3. Thus, a POSITA would have understood that Houston's amplitude of vibration, $A_{combined}$, is *a control output that determines a current supplied by the power supply to the driving component*. Further, as described with Claim 3, Ibuki teaches that the drive frequency at which the control component drives the moveable component to linearly oscillate. "If the drive frequency f is identical to the natural frequency f0, the amplitude reaches maximum, and the current reaches a minimum value, as shown in FIG. 5." *Id.* at 5:8-10. "However, when the drive frequency f is higher or lower than the natural frequency f0, the amplitude decreases, and the drive current increases." *Ibuki*. at 5:10-13. As such, the drive frequency is *a control output that determines a frequency at which the control component drives the moveable component to linearly oscillate*.

J. Ground 3: Claim 11 is obvious over Houston, Goldenberg, and Rosenberg

1. *Claim 11 – The linear vibration module of claim 1 wherein the linear vibration module further includes two or more driving components, each, when activated, driving the moveable component to linearly oscillate with an amplitude particular to the activated driving component.*

236. Rosenberg teaches a voice coil actuator where "the wire coil includes multiple sub-coils that each include a different number of loops." *Rosenberg* at 5:57-58; *see also*, ¶ 107. "[F]or example, the four different sub-coils shown in FIGS. 20b-20e, different magnetic fields can be induced for the pendulum head 244' and thus different torques can be applied to the pendulum." *Rosenberg* at 31:53-56.

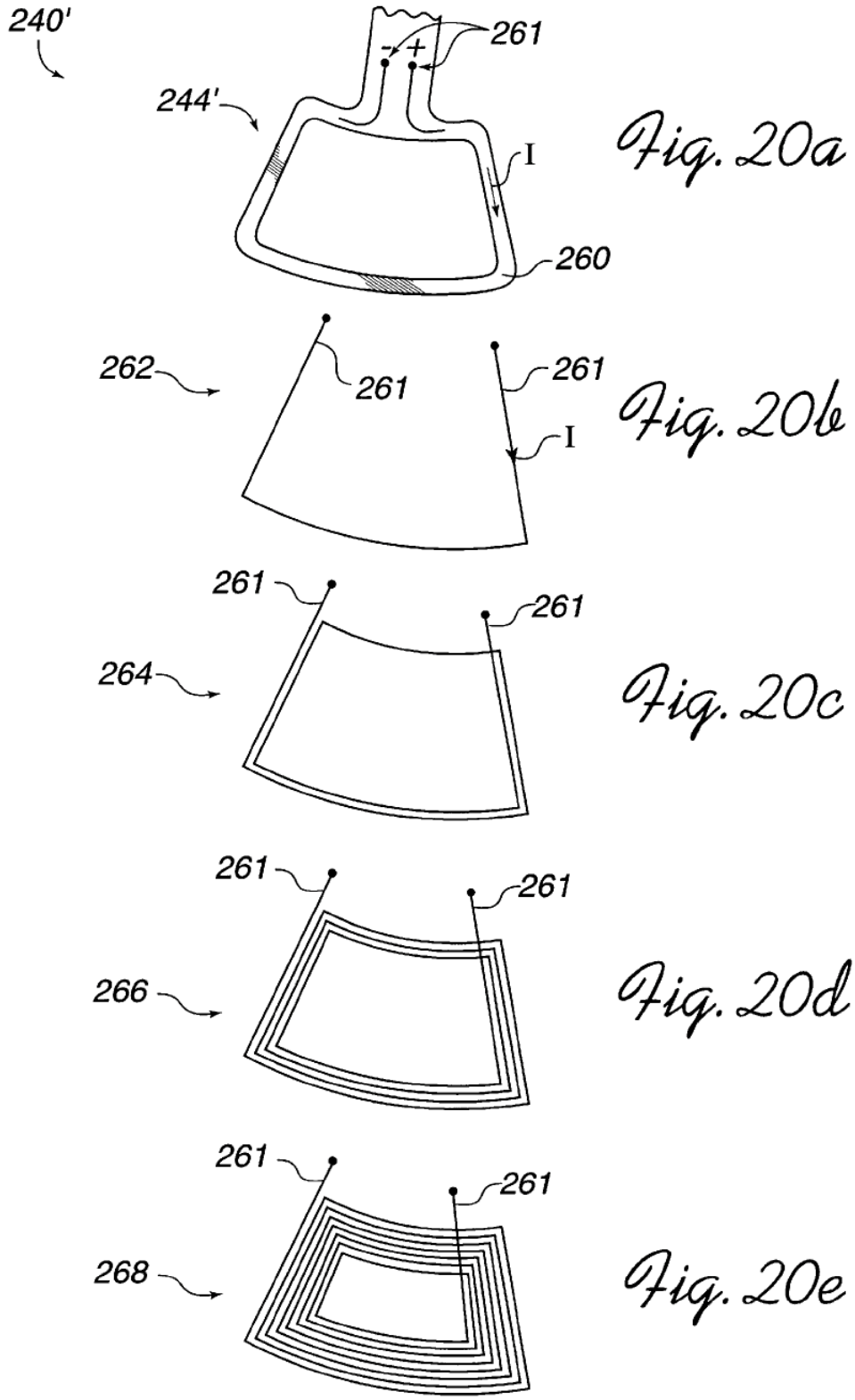

Id. at Figs. 20a-e.

237. Because torque is the rotational analogue of linear force, force is mass times acceleration, and the mass of the pendulum is constant, the different sub-coils would produce different rotational accelerations, which at a common drive frequency would result in different amplitudes corresponding to the double integration of the different accelerations over the constant period of the drive frequency. *See e.g., Serway* at 303 ("The tendency of a force to rotate an object about some axis is measured by a vector quantity called torque. Torque is the cause of changes in rotational motion and is analogous to force, which causes changes in translational motion."), 101 (Describing Newton's second law as represented in mathematical form as force equals mass times acceleration.).

238. Per Rosenberg, "each sub-coil can be provided with a set of four switches (commonly referred to as an 'H-bridge') to select the direction of the current in the sub-coil." *Id.* at 32:7-10. Thus, each sub-coil qualifies as a *driving component* meaning that Rosenberg teaches four (i.e., *two or more*) *driving components*. Rosenberg further teaches that this arrangement is advantageous because "the current magnitudes need not be varied, allowing for less complex electronics[.]" *Id.* at 32:10-12.

239. It would have been obvious to a POSITA to modify Houston's haptic interface to include two or more driving components as taught by Rosenberg. As noted by Rosenberg, this arrangement would have predictably allowed Houston's

haptic interface to drive the moveable component to linearly oscillate with an amplitude/magnitude particular to the activated driving component using less complex electronics. For this reason, a POSITA would have been motivated to improve similar actuators in the same way. Since electromagnetic coils were well understood and commonplace at the time of the '081 Patent, there would have been a reasonable expectation of success incorporating Rosenberg's two or more driving components into Houston's haptic interface. *See* ¶ 60, ¶¶ 62-63.

K. Ground 4: Claim 15 is obvious over Houston, Goldenberg, and Tierling

1. *Claim 15 – The linear vibration module of claim 1 wherein the control component drives simultaneous oscillation of the moveable component at two or more frequencies to generate complex vibration modes.*

240. Houston teaches that "a single actuator can impart forces at **multiple frequencies at the same time**." Houston at [0102] (emphasis added). In related art, Tierling teaches a similar haptic interface device, including an actuator that outputs a "linear force … using a linearly moving element, as in a voice coil actuator or a linear moving-magnet actuator[.]" *Tierling* at [0042]. Tierling teaches that "when driving the inertial mass at a low frequency, the sensation to the user is weak" because of "the limited range of motion of the inertial mass in assembly 100[.]" *Id.* at [0062]. "This limited range of motion may be desirable in other aspects of the

assembly design, e.g. a low profile so it will fit in small devices, but it detracts from the strength of the low frequency tactile sensations." *Id.*

241. To solve this problem, Tierling teaches "methods for enhancing the feel of tactile sensations," including a method where a "high frequency waveform is modified or modulated according to the desired low frequency so as to convey the sense of the low frequency in the tactile sensation perceived by the user." *Id*. at [0060], [0080]. In one example, a 1 Hz waveform is used to modulate a 30 Hz waveform and then normalized to produce the combined waveform depicted in Figure 12. *Id.* at [0092]-[0106]. As shown in the side-by-side comparison below, Tierling's normalized waveform is nearly identical to the waveform shown in Figure 22B of the '081 Patent, which illustrates a complex vibration mode "driven at a **primary operational frequency of 25 Hz** with an added **modulating 1 Hz operational frequency**." *'081 Patent* at 13:23-26 (emphasis added).

Tierling Fig. 12

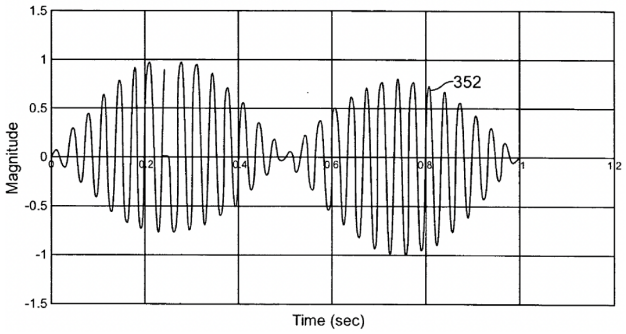

30 Hz primary oscillation frequency modulated by a 1 Hz modulating oscillation frequency

'081 Fig. 22B

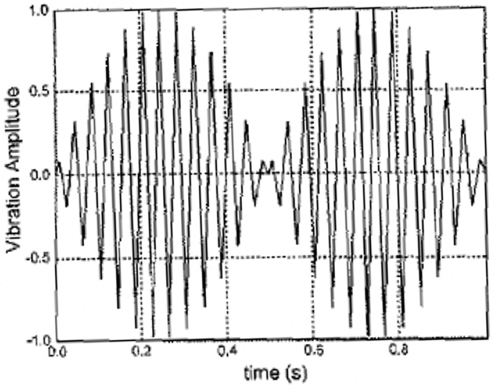

25 Hz primary oscillation frequency modulated by a 1 Hz modulating oscillation frequency

Tierling at Fig. 12 (annotated); *'081 Patent* at Fig. 22B (annotated).

242. Thus, Tierling teaches enhancing the feel of tactile sensations by *driv[ing] simultaneous oscillation of the moveable component at two or more frequencies to generate complex vibration modes*.

243. Based on the teachings of Tierling, it would have been obvious, and a POSITA would have been motivated to configure Houston's vibration controller/microprocessor (i.e., *the control component*) to *drive simultaneous oscillation of the moveable component at two or more frequencies to generate complex vibration modes*. A POSITA would have understood that Houston's linear actuators would have had a limited range of motion to have a low enough profile to fit in a handheld controller, such as Houston's haptic interface. As such, a POSITA would have understood that Houston's linear actuators would have also produced "weak" low-frequency sensations. Based on the teachings of Tierling, it would have been obvious, and a POSITA would have been motivated to configure Houston's vibration controller/microprocessor to modulate a lower frequency waveform with a higher frequency waveform to predictably enhance the sensation of low-frequency vibrations, thereby improving similar haptic feedback devices in the same way. Modulating signals of different frequencies, as described by Tierling, is generally known as amplitude modulation and was extremely well-known in the art. *See e.g., Oppenheim* at 583 ("One large class of modulation methods relies on the concept of

amplitude modulation or AM in which the signal we wish to transmit is used to modulate the amplitude of another signal. A very common form of amplitude modulation is sinusoidal amplitude modulation[.]"). Thus, there would have been a reasonable expectation of success configuring Houston's vibration controller to modulate a lower frequency waveform with a higher frequency waveform, as taught by Tierling.

L. Ground 5: Claim 16 is obvious over Houston, Goldenberg, Tierling, and Fukumoto

1. *Claim 16 – The linear vibration module of claim 15 wherein the complex vibration modes include:*

(a) *[16(a)] a primary oscillation frequency modulated by a modulating oscillation frequency;*

244. The '081 Patent discloses, "FIG. 22B illustrates a vibration mode of the linear vibration module driven at a **primary operational frequency** of 25 Hz with an added **modulating** 1 Hz **operational frequency**." *'081 Patent* at 13:23-26 (emphasis added). For the same reasons as I discussed with respect to Ground 4, Houston combined with Tierling teaches modulating *a primary oscillation frequency by a modulating oscillation frequency*, such as described in the '081 Patent. *See* ¶¶ 240-243.

(b) *[16(b)] a beat frequency; and*

245. The only disclosure in the '081 Patent concerning the claimed *beat frequency* relates to Figure 23, which "illustrates a different complex vibrational

mode in which two driving frequencies combine to produce **a lower-frequency beat-wave form**." *'081 Patent* at 13:29-31 (emphasis added).

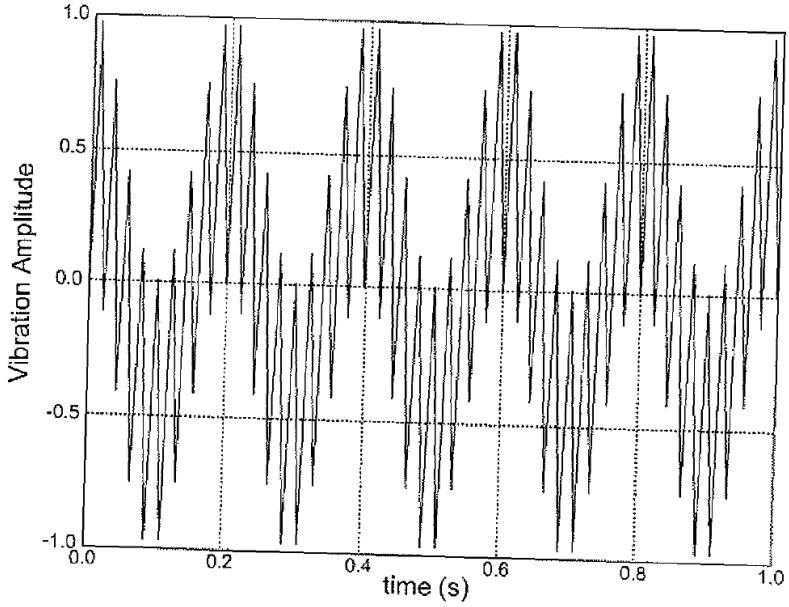

Id. at Fig. 23.

246. As explained above, Fukumoto's CPU 113 outputs waveform data to the drive signal generation circuit to drive oscillation of a moveable component in an actuator. *See*, ¶ 120. Fukumoto also teaches "that when an audio signal of audible band is applied to the coil 121 of the oscillatory actuator 115, the case 115a of the oscillatory actuator 115 or the main case 101 of the PDA 10 at which the oscillatory actuator 115 is placed, for example, is caused to vibrate, thereby creating a sound in accordance with the audio signal." *Fukumoto* at [0163]; *see also, id.* at [0176] ("Further, by applying an audible band audio signal to the coil 121 of the oscillatory actuator 115, it is possible to use the oscillatory actuator 115 as a sound source.").

247. Fukumoto further elaborates on this concept describing a drive signal waveform that combines two driving frequencies to "caus[e] the oscillatory actuator 115 to generate **vibration and sound simultaneously**." *Fukumoto* at [0307] (emphasis added). "[A]s explained in the first embodiment, by applying an audible band audio signal to the coil 121 of the oscillatory actuator 115, it is possible to use the oscillatory actuator 115 as a speaker 604 (sound source)." *Id.* at [0306]. "The waveform shown in [FIG. 51] is a combination of the waveform for generating vibration shown in FIG. 49 and the waveform for generating sound shown in FIG. 50." *Id.* at [0307].

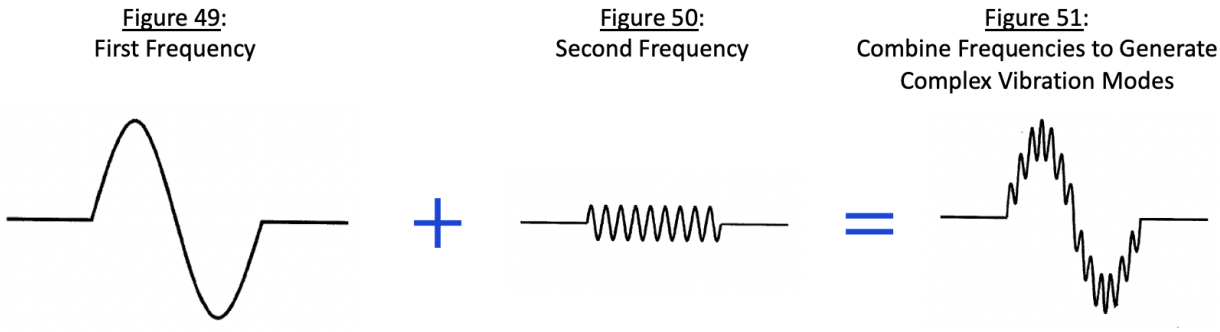

Id. at Figs. 49-51 (annotated).

248. Indeed, one cycle of the combined waveform in Figure 51 of Fukumoto is very similar to the example of one cycle of the complex vibrational mode illustrated in Figure 23 of the '081 Patent:

Fukumoto Fig. 51

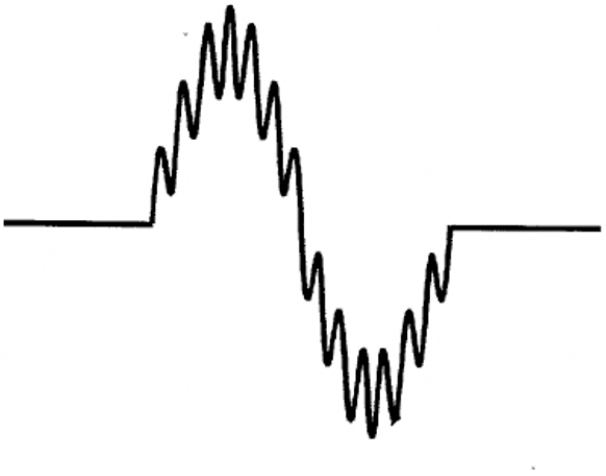

'081 Fig. 23

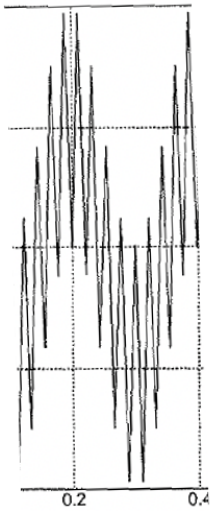

Id. at Fig. 51 (depicting one cycle); *'081 Patent* at Fig. 23 (excerpted to show approximately one cycle). Further a person of ordinary skill in the art would understand that *sound is vibration*. A POSITA would have understood that sound is typically created by moving (vibrating) a fixed speaker's magnetic coils, displacing air as opposed to inducing physical movement (vibrations). Such speaker coils are electromechanical linear actuators very similar to the linear vibration modules ("LRMs") of the '081 Patent. *'081 Patent* at 5:5–34, FIG 4B–4D, 13:52–14:16, FIG 24A–25.

249. Therefore, Fukumoto teaches generating <u>*a beat frequency*</u> within the meaning of the '081 Patent.

250. It would have been obvious, and a POSITA would have been motivated to configure Houston's vibration controller/microprocessor (i.e., <u>*the control*</u>

component) to output *a beat frequency*, as taught by Fukumoto. A POSITA would have understood the advantages of configuring Houston's haptic interfaces to generate sounds in addition to vibrations. For example, this would have allowed the user to receive audible feedback in addition to visual and haptic feedback thereby enhancing the user's experience. Thus, a POSITA would have been motivated to improve similar haptic feedback devices in the same way.

251. A POSITA would have also understood that Houston's linear actuators are the same type of actuator used by Fukumoto to generate sounds and vibrations. *See* ¶¶ 88-92 (describing Houston's linear moving-magnet actuators), ¶¶ 118-119 (describing Fukumoto's linear moving-magnet actuator). Therefore, no hardware changes to Houston's haptic interface would have been required to enable it to output sounds and vibrations simultaneously. A POSITA would have understood that audible feedback was a well-understood and important form of user feedback. *See, e.g., Preece* at 248 ("Sound is of particular value where the eyes are engaged in some other task, or where a complete situation of interest cannot be visually scanned at one time. Sound can be useful for monitoring continuous background processes that are normally not important until something out of the ordinary happens…Sound can also be useful for drawing attention when expected background events fail to happen[.]"). Thus, there would have been a reasonable expectation of success

configuring Houston's microprocessor to output *a beat frequency*, as taught by Fukumoto.

(c) *[16(c)] an aperiodic oscillation waveform.*

252. Regarding the claimed *aperiodic oscillation waveform*, the '081 Patent discloses that "[b]y varying the number, relative amplitudes, and frequencies of two or more driving signals, a microprocessor-controlled or microcontroller-controlled linear-resonance vibration module can be controlled to produce any number of complex vibrational patterns and modes, including … fully **aperiodic vibration modes that do not repeat time**." *'081 Patent* at 13:34-41 (emphasis added). Thus, *an aperiodic oscillation waveform* at least includes a waveform that does not repeat in time.

253. Goldenberg teaches "a nonperiodic effect, such as a spring, damper, obstruction, or vector force, and the mapped vibrotactile haptic effect can be a vibration having a magnitude based on a magnitude of the nonperiodic effect." *Goldenberg* at [0006]. "Nonperiodic effects are determined based not on time and magnitude parameters, but on other parameters instead of or in addition to these parameters." *Id*. at [0075]. Examples of nonperiodic effects include vector forces, "which provide a force in a specified direction in one or more degrees of freedom of the manipulandum." *Id*. at [0079]. "For example, in a racing or driving game, a vector force is used to output a collision sensation in the rotation of a steering wheel

when the car impacts an object such as a wall or other car, a shift sensation when a stickshift [is] moved, or a spin out sensation when the car loses control." *Id.*

254. Another nonperiodic effect is a jolt or vibration. *Id*. at [0080]. "[F]or example, a single jolt can be output by commanding a 1 Hz frequency with a duration of 1 second, to provide a single rotation." *Id.* Another example are spring forces, which "are conditions which are typically based on the formula F=kX, indicating that the output force F is based on the current position X of the user manipulandum in particular degree of freedom, and a spring constant k." *Id.,* [0086]. "For example, in driving games, spring forces can be used to center the steering wheel to the center position, where the user feels a force having a magnitude proportional to the amount of rotation of the wheel from the center position and in a direction towards the center position." *Id.*

255. Damping forces are another nonperiodic effect "based on the formula F=Bv, indicating that the force F is based on the current velocity v of the user manipulandum in a particular degree of freedom, and a damping constant B." *Id.* at [0092]. "For example, in a driving game, a damping force can be output on a steering wheel when the controlled car moves into a simulated pool of oil or water, indicating the sluggishness of steering in the body of liquid." *Id.*

256. Because Goldenberg's nonperiodic effects, by definition, do not repeat in time, each qualifies as <u>*an aperiodic oscillation waveform*</u> within the meaning of

the ’081 Patent. Moreover, a POSITA would have understood that multiple nonperiodic effects would occur simultaneously in a driving game when, for example, the user’s car is spinning out of control and impacts an object such as another car or a wall. *Id*. at [0079].

257. It would have been obvious, and a POSITA would have been motivated to configure Houston’s vibration controller/microprocessor (i.e., *the control component*) to output *an aperiodic oscillation waveform*, as taught by Goldenberg. Houston, like Goldenberg teaches generating haptic effects for a driving simulation. *Houston* at [0218]-[0219]. A POSITA would have understood that Goldenberg’s nonperiodic effects would apply equally to Houston’s driving simulation. Thus, a POSITA would have been motivated to configure Houston’s microprocessor to output the same types of nonperiodic effects, including simultaneous nonperiodic effects, to enhance the realism of Houston’s driving simulation, thereby improving similar haptic systems in the same way. Because producing nonperiodic vibration waveforms corresponding to user actions in games was well-known and common for many years prior to the ’081 Patent, there would have been a reasonable expectation of success configuring Houston’s microprocessor to output *an aperiodic oscillation waveform* corresponding to user actions in the driving simulation. *See* ¶¶ 80-81.

IV. CONCLUSION

258. I declare that all statements made herein of my knowledge are true, and that all statements made on information and belief are believed to be true, and that these statements were made with the knowledge that willful false statements and the like so made are punishable by fine or imprisonment, or both, under Section 1001 of Title 18 of the United States Code.

Date: 16 FEB 2024

By: _____
Gregory F. Welch

Appendix A

Gregory Francis Welch

Curriculum Vitae—February 12, 2024

Contact Information

University *of* Central Florida

College of Nursing
612 University Towers
12201 Research Parkway
Orlando, FL 32826-3298 (USA)

Computer Science
441 Harris Engineering Center
4000 Central Florida Boulevard
Orlando, FL 32816-2362 (USA)

Institute for Simulation and Training
110 Partnership III
3100 Technology Parkway
Orlando, FL 32826-3281 (USA)

welch@ucf.edu
+1 407.796.2823

Professional Experience (Summary)

2011–present **University *of* Central Florida**
Pegasus Professor (2020)
AdventHealth Endowed Chair in Healthcare Simulation (2013)
Professor, College of Nursing, Academic Health Sciences Center (2013)
Professor, Computer Science, College of Engineering and Computer Science (2011)
Professor, Institute for Simulation & Training (2011)
Co-Director, IST Synthetic Reality Lab (2011)
Faculty, Graduate Certificate in Mixed Reality Engineering (2020)
Faculty, Modeling & Simulation Graduate Program (2011)
Faculty, Interactive Computing Experiences Research Cluster (2014)

1996–2020 **University *of* North Carolina *at* Chapel Hill**
Adjunct Professor, Computer Science (2012-2020)
Research Professor (Assistant, Associate), Computer Science (1996–2012)
UNC Site Coordinator, NSF Graphics and Visualization Center (1996–1998)

1990–1992 **Northrop Defense Systems Division**
Senior Engineer, Airborne Electronic Countermeasures, Digital Systems Group

1987–1990 **NASA Jet Propulsion Laboratory (California Institute of Technology)**
Voyager Spacecraft Project, Flight Command and Data Management Section

Education

May 1997 **Ph.D., Computer Science**
University *of* North Carolina *at* Chapel Hill, Chapel Hill, NC
Under the direction of Gary Bishop

May 1995 **M.S., Computer Science**
University *of* North Carolina *at* Chapel Hill, Chapel Hill, NC

May 1986 **B.S. with *Highest Distinction*, Electrical Engineering Technology**
Purdue University, West Lafayette, IN

Personal Awards

- **IEEE Virtual Reality Academy**, IEEE Visualization and Graphics Technical Committee, March 13, 2022 during the 28th IEEE Virtual Reality Conference in Christchurch, New Zealand.
- **Scroll & Quill Society**, the University of Central Florida, October 1, 2021. The award recognizes "sustained and outstanding achievements in research and/or creative activities" at UCF.
- **Pegasus Professor**, the University of Central Florida, April 1, 2020. The award recognizes faculty excellence in the three primary areas of academic endeavor: teaching, research and service. There were approximately 50 Pegasus Professors at UCF in 2020.
- **IEEE Virtual Reality Technical Achievement Award**, IEEE Visualization and Graphics Technical Committee, "in recognition for his contributions to human motion tracking and to mixed reality applications in medicine and training," March 21, 2018 during the 25th IEEE Virtual Reality Conference in Reutlingen, Germany.
- **Luminary Award**, University of Central Florida, for "exceptional faculty whose work is advancing their discipline and making a difference," October 18, 2017.
- **Research Incentive Award** (RIA), University of Central Florida, for "outstanding research, scholarly, or creative activity that advances the body of knowledge in a particular field, including interdisciplinary research and collaborations," March 7, 2017.
- **Outstanding Performance as Co-Chairman of the IEEE VR 2014 Conference**, IEEE Computer Society, April 3, 2014.
- **Outstanding Performance as Co-Chairman of the IEEE VR 2013 Conference**, IEEE Computer Society, March 18, 2013.
- **Rock StAR Award**, 15th IEEE International Symposium on Mixed and Augmented Reality (ISMAR 2016), for teaching role in an introductory course on Augmented Reality (AR) for approximately 40 Mexican students interested in AR, September 20, 2016. Mérida, México.
- **Excellence in Teaching Award**, UNC-Chapel Hill Computer Science Student Association, for 3D Computer Modeling and Animation, Spring 2007.
- **Outstanding Senior Design Project Award**, "The Easy Chair: A Microprocessor-Controlled Wheelchair for Children With Muscular Disorders," E.T., Purdue University, 1986

Joint Awards

- **Best Paper Award**, "Intuitive user interfaces for real-time magnification in augmented reality," with Ryan Schubert and Gerd Bruder, 29th ACM Symposium on Virtual Reality Software and Technology (VRST), October 9, 2023.
- **TechConnect Innovation Award**, "Intelligent Object Magnification for Augmented Reality Displays," with Dr. Gerd Bruder, Zubin Choudhary, and Dr. Kangsoo Kim. 2021 TechConnect Innovation Showcase, October 18-21, 2021, Washington, DC. USA
- **Best Demo Award**, "Real Time Magnification in Augmented Reality," with Zubin Choudhary, Jesus Ugarte, and Gerd Bruder. ACM Spatial User Interaction 2021, November 9–10, 2021 (Virtual).
- **Best Demo Audience Choice Award**, "Towards Interactive Virtual Dogs as a Pervasive Social Companion in Augmented Reality," with Nahal Norouzi, Kangsoo Kim, and Gerd Bruder. International Conference on Artificial Reality and Telexistence and Eurographics Symposium on Virtual Environments (ICAT-EGVE 2020).
- **Best Long Paper**, "Effects of shared gaze parameters on visual target identification task performance in augmented reality," with Nahal Norouzi, Austin Erickson, Kangsoo Kim, Ryan Schu-

bert, Joeseph J. LaViola Jr., Gerd Bruder, in *Proceedings of the ACM Symposium on Spatial User Interaction (SUI)*, page 11, New Orleans, LA USA, October 20 2019. Association of Computing Machinery.

- **Best Paper**, "The physical-virtual table: Exploring the effects of a virtual human's physical influence on social interaction," with Myungho Lee, Nahal Norouzi, Gerd Bruder, and Pamela J. Wisniewski. 24th ACM Symposium on Virtual Reality Software and Technology; Tokyo, Japan; December 1, 2018.
- **Best Paper Honorable Mention**, "Blowing in the Wind: Increasing Copresence With a Virtual Human via Airflow Influence in Augmented Reality," with Kangsoo KIM and Gerd BRUDER. ICAT-EGVE 2018 - International Conference on Artificial Reality and Telexistence and Eurographics Symposium on Virtual Environments; Limassol, Cyprus; November 9 2018.
- **Best Student Paper**, 2017 ACM Symposium on Virtual Reality Software (VRST 2017), "Exploring the effects of observed physicality conflicts on real–virtual human interaction in augmented reality," by Kangsoo Kim (student advisee), Gerd Bruder, and Greg Welch; Gothenberg, Sweden; November 10, 2017.
- **Long Lasting Impact Paper**, 15th IEEE International Symposium on Mixed and Augmented Reality (ISMAR 2016), for a pair of 1998 papers on "Spatial Augmented Reality" (SAR), with co-authors Prof. Ramesh Raskar, Prof. Henry Fuchs, and Deepak Bandyopadhyay; Mérida, México; September 20, 2016.
- **Second Best Paper** at 5th ACM/IEEE International Conference on Distributed Smart Cameras; Ghent, Belgium; August 25, 2011.
- **Best Paper**, ACM Symposium on Virtual Reality Software and Technology 1999 (VRST 99); London, England, United Kingdom; December 22, 1999.

Advisee Awards (when Advisees)

- Jonathan Jules (undergraduate advisee), **National Action Council for Minorities in Engineering (NACME) Scholarship** for 2019–2020, September 30, 2019.
- Salam Daher (Ph.D. advisee), **Collegiate Award** from the National Center for Women in Technology (NCWIT)—four recipients total, May 15, 2018, Grapevine, TX USA.
- Salam Daher (Ph.D. advisee), **RADM Fred Lewis Scholarship Award**, Interservice/Industry Training, Simulation and Education Conference (I/ ITSEC), August 5, 2017.
- Salam Daher (Ph.D. advisee), **Link Foundation Fellowship in Modeling, Simulation, and Training** for the 2016–2017 academic year, March 16, 2016.
- Joshua Morton (undergraduate advisee), **Rodney F. Hood Undergraduate Research Award** in support of "Tremor Sensing and Quantification" (November 15, 2010–June 30, 2011).

Other Honors (Selected)

- **Keynote Talks** and **Other Invited Talks** as indicated below.
- **Fellow**, Institute of Electrical and Electronics Engineers (IEEE), January 1, 2022.
- **Fellow**, National Academy of Inventors (NAI), December 7, 2021.
- Internationally-recognized **Kalman filter** web site (`http://www.cs.unc.edu/~welch/kalman/`) and associated article "An Introduction to the Kalman Filter," UNC Technical Report TR95-041, **cited over 11,200 times** according to Google as of 15 APR 2023.

- **Prof. Rudolph Kalman personally invited Prof. Welch** to attend the National Academy of Engineering ceremony where he was awarded the 2008 Charles Stark Draper Prize for the development of what became known as the **Kalman Filter**.
- **IEEE Technical Expert** for Virtual, Augmented and Mixed Reality, IEEE Public Visibility Initiative, 2018–present.
- **Member**, World Economic Forum (WEF), Metaverse Governance Working Group (2022–present).
- **Member**, World Economic Forum (WEF), Global Future Councils, Council on Virtual Reality and Augmented Reality (2018–2022).
- **Member**, National Council of Architectural Registration Boards (NCARB), Futures Task Force (2017–2019).
- **Certificate of Appreciation** for two-day course on an "Introduction to the Kalman Filter" for Autonomy Incubator Short Course Series (AISCS), NASA Langley Research Center (LaRC), Hampton, Virginia, November 5-6, 2014,
- **Featured exhibit**, Collaborations: Humanities, Arts & Technology (CHAT) Festival, "The Bathysphere: Motion Capture as Art," with Prof. Francesca Talenti, February 16–20, 2010, UNC-Chapel Hill.

Professional Service

- Professional Associations
  - Fellow, Institute of Electrical and Electronics Engineers (IEEE)
  - Fellow, National Academy of Inventors (NAI)
  - Member, Association for Computing Machinery (ACM)
  - Pioneer, ACM Special Interest Group on Computer Graphics and Interactive Techniques (SIGGRAPH)
  - Member, European Association for Extended Reality (EuroXR)
  - Member, European Association for Computer Graphics (Eurographics)
  - Member, International Virtual Reality Healthcare Association (Founding Member)
  - Member, Society for Simulation in Healthcare (SSIH)
  - Member, International Nursing Association of Clinical Simulation & Learning (INACSL)
  - Member, Southern Nursing Research Society (SNRS)
- Boards and Committees
  - Member, World Economic Forum (WEF), Metaverse Governance Working Group (2022–present).
  - Member, World Economic Forum (WEF), Global Future Councils, Council on Virtual Reality and Augmented Reality (2018–2022)
  - Founding Member, International Virtual Reality Healthcare Association, Advisory Board (2019–present)
  - Emeritus Member, International Symposium for Mixed & Augmented Reality, Steering Committee (2012–2014, Emeritus 2014–present)
  - Member, UCF IST Modeling & Simulation Graduate Program, Advisory Committee (2012–present)
  - Member, UCF Information Technology Resource, Advisory Committee (2014–present)
  - Member, UCF Office of Research, COVID-19 Lab Reopening Task Force (2020–2021)

  - Member, National Council of Architectural Registration Boards (NCARB), Futures Task Force (2017–2019)
  - Senior Advisor, TrakMark Working Group—SIG MR and VR Society of Japan (past)
  - Member, Board of Directors, HiBall Tracker, Inc. (past)
  - Member, UNC Committee on Student Conduct (past)
  - Member, UNC Computer Science Committee on Curriculum and Planning (past)
  - Member, UNC Computer Science Committee on Publications (past)
- Reviewer, Committee, and Editorial Activity
  - Reviewer/panelist, National Science Foundation (NSF), U.S. Department of Energy (DOE), and other funding organizations/units
  - Reviewer, NSF Computing Innovation Fellows
  - Associate Editor, PRESENCE: Virtual and Augmented Reality (2002–present)
  - Associate Editor, Frontiers in Virtual Reality (2014–present)
  - Editorial Board, Virtual Reality & Intelligent Hardware (2019–present)
  - Editorial Board, Journal of Virtual Reality (past)
  - Reviewer, ACM: International Conference on Graphics and Interactive Techniques (SIGGRAPH); Symposium on Virtual Reality Software and Technology (VRST); Symposium on Interactive 3D Graphics; Multimedia; User Interface Software and Technology (UIST); Transactions on Mathematical Software;
  - IEEE: Computer Graphics and Applications (CG&A); International Symposium on Mixed and Augmented Reality (ISMAR)—Area Chair; Virtual Reality (VR); Transactions on Vizualization and Computer Graphics; Transactions on Aerospace and Electronic Systems; Conference on Computer Vision and Pattern Recognition (CVPR)
  - International Symposium on 3D Data Processing, Visualization, and Transmission (3DPVT)
  - International Symposium on Ubiquitous Virtual Reality (ISUVR)
  - IEEE/ACM International Symposium on Wearable Computers
  - The combined International Conference on Artificial Reality & Telexistence and Eurographics Symposium on Virtual Environments (ICAT-EGVE)
  - EURASIP Journal of Applied Signal Processing; Transactions on Automatic Control
  - Journal of Optimal Control Applications and Methods
  - Eurographics Workshop on Virtual Environments
  - New Immersive Displays for the Near Future (Laval Virtual 2011 Symposium)
- Developer of popular free Mac OS X Mail plugins MailFollowUp and MailRecent
- Testifying intellectual property expert witness / consultant in areas including human-computer interaction, virtual and augmented reality, handheld devices, position and motion estimation, sensor fusion, interactive electronic systems, and related technology.
- Event Organization
  - IEEE Virtual Reality 2024 (VR 2024), Co-General Chair with Carolina Cruz-Neira (University of Central Florida), March 16–20, 2024, Orlando, FL, USA.
  - EuroXR 2023 General Co-Chair with Patrick Bourdot (University Paris-Saclay, France) and Benjamin de Witt (Utrecht, The Netherlands), November 28–30, 2023, Rotterdam, The Netherlands.
  - Workshop on Inclusive and Generalizable Human Subject Research in XR, ISMAR 2022, with Stevie Carnell, Gerd Bruder, Jeanine Stefanucci, Sun Joo (Grace) Ahn, Valerie Taylor, Tabitha Peck, and Jeremy Bailenson. October 17, 2022, Singapore, Singapore (and virtual).

- Workshop on Considerations for Research Studies in XR, with Nahal Norouzi (University of Central Florida), Advertising in the Metaverse, 2022 American Academy of Advertising Annual Conference, March 24, 2022, St. Petersburg, FL USA.
- IEEE Virtual Reality 2020, Best Paper awards committee, November 22–26, 2020. Atlanta, Georgia, USA. (Held on-line due to Covid-19.)
- Extended Reality for Good (XR4Good) workshop, 18th IEEE International Symposium on Mixed and Augmented Reality (ISMAR 2019), co-organized with Arindam Dey (University of Queensland), Mark Billinghurst (University of South Australia), Gun Lee (University of South Australia), and Stephan Lukosch (TU Delft). October 2019, Beijing, China.
- VR 2019 Program Committee Co-Chair, IEEE Virtual Reality 2019 (Osaka, Japan), with Bruce Thomas (University of South Australia in Adelaide, Australia), Torsten Kuhlen (RWTH Aachen University, Aachen, Germany), and Rob Teather (Carleton University, Ottawa, Canada).
- Augmented Reality Visioning Workshop (ARVW 2018), with Gerd Bruder (University of Central Florida) and Peter Squire (Office of Naval Research), July 30–August 3, 2018, Warrenton, VA, USA.
- VR 2018 Program Committee Co-Chair, IEEE Virtual Reality 2018 (Germany), with Kiyoshi Kiyokawa (Osaka University, Japan), Frank Steinicke (University of Hamburg, Germany), and Bruce Thomas (University of South Australia in Adelaide, Australia).
- Virtual and Augmented Reality for Good (VAR4Good) workshop, 25th IEEE Conference on Virtual Reality and 3D User Interfaces (VR 2018), co-organized with Bruce Thomas, Arindam Dey, and Mark Billinghurst (all University of South Australia in Adelaide, Australia), March 18, 2018, Reutlingen, Germany.
- Augmented Reality for Good (AR4Good) workshop, 16th IEEE International Symposium on Mixed and Augmented Reality (ISMAR 2017), co-organized with Arindam Dey and Mark Billinghurst (both University of South Australia in Adelaide, Australia), October 9, 2017, Nantes, France.
- Combined 26th International Conference on Artificial Reality and Telexistence (ICAT 2016) and 21st Eurographics Symposium on Virtual Environments (ICAT-EGVE 2016) *Best Paper Award* committee, December 7–9, 2016. Little Rock, Arkansas, USA.
- ACM Symposium on Virtual Reality Software and Technology (VRST 2016) *Best Paper Award* committee, November 2–4, 2016. Munich, Germany.
- 15th IEEE International Symposium on Mixed and Augmented Reality (ISMAR 2016), co-organized "AR101," an introductory course on Augmented Reality (AR) for a group of approx. 40 Mexican students interested in AR. September 20, 2016. Mérida, México.
- 15th IEEE International Symposium on Mixed and Augmented Reality (ISMAR 2016), **Best Paper Award** committee, September 19–23, 2016. Mérida, México.
- ISMAR 2016 Outreach Co-Chair, IEEE International Symposium on Mixed and Augmented Reality (ISMAR2016), Mérida, México, September 19–23, 2016.
- Workshop "Human Perception and Psychology in Augmented Reality (HPPAR)," with Bruce H. Thomas (The University of South Australia Mawson Lakes) and James Baumeister (University of South Australia), IEEE International Symposium on Mixed and Augmented Reality (ISMAR2015), September 29, 2015, Fukuoka, Japan.
- Dagstuhl Seminar on "Virtual Realities" (Seminar 13241), co-organized with Guido Brunnett (TU Chemnitz, Germany), Sabine Coquillart (INRIA Rhône-Alpes, France), and Robert van Liere (Center for Mathematics and Computer Science, Netherlands), June 10–14, 2013, The International Conference and Research Center for Computer Science, Dagstuhl, Germany.

- IEEE Virtual Reality 2013 (VR 2013), Co-General Chair with Ben Lok (University of Florida), March 16–23, 2013, Orlando, FL, USA.
- 11th International Symposium on Mixed and Augmented Reality (ISMAR 2012), Co-General Chair with Blair MacIntyre (Georgia Tech), November 5–8, 2012, Atlanta, Georgia, USA.
- Joint Virtual Reality Conference 2011 (JVRC 2011), International Program Committee Co-chair with Sabine Coquillart (INRIA Rhône-Alpes, France) and Anthony Steed (University College of London, UK).
- 10th International Symposium on Mixed and Augmented Reality (ISMAR 2011), Program Committee Co-Chair with Gerhard Reitmayr (Graz University of Technology) and Jun Park (Hongik University).
- VR 2011 Research Demos Co-Chair, IEEE Virtual Reality 2011 (Singapore), with Dirk Reiners (University of Louisiana at Lafayette, USA), Henry Duh (National University of Singapore), and Jiung-Yao Huang (National Taipei University, Taiwan).
- VR 2010 Research Demos Co-Chair, IEEE Virtual Reality 2010 (Waltham, MA, USA), with Yoshifumi Kitamura (Osaka University, Japan), Laura Monroe (Los Alamos National Laboratories, USA), Dirk Reiners (University of Louisiana at Lafayette, USA), and Simon Richir (Laval Virtual, France).
- Dagstuhl Seminar on "Virtual Realities" (Seminar 08231), co-organized with Guido Brunnett (TU Chemnitz, Germany) and Sabine Coquillart (INRIA Rhône-Alpes, France), June 1–6, 2008, The International Conference and Research Center for Computer Science, Dagstuhl, Germany.
- VR 2007 Local Arrangements Co-Chair, IEEE Virtual Reality 2007 (Charlotte, NC, USA), with Zachary Wartell (UNC-Charlotte, USA), Sabarish Babu (UNC-Charlotte, USA), and Regis Kopper (Virginia Tech, USA).
- Workshops/Tutorials Chair, 5th IEEE and ACM International Symposium on Mixed and Augmented Reality (Santa Barbara, CA, USA).
- Co-Chair with Chris Jaynes (University of Kentucky) of IEEE CVPR 2006 International Workshop on Projector-Camera Systems, (ProCams 2006), New York, NY, USA.
- 3DPVT 2006 Organizing Committee, Third International Symposium on 3D Data Processing, Visualization and Transmission (Chapel Hill, NC, USA).
- EDT 2006 Co-chair, IEEE Virtual Reality 2006 International Workshop on Emerging Display Technologies (Alexandria, VA, USA), with Mark Bolas (USC and Fakespace Labs) and Andreas Simon (FH-Aargau).
- ICAT 2005 Program Co-Chair, 15th International Conference on Artificial Reality and Telexistence (Christchurch, New Zealand), with Sang Chul Ahn (KIST, Korea), and Haruo Noma (ATR, Japan).
- ProCams 2005 Posters Chair, IEEE CVPR 2005 International Workshop on Projector-Camera Systems (San Diego, CA, USA).
- EDT 2005 Co-chair, IEEE Virtual Reality 2005 International Workshop on Emerging Display Technologies (Bonn, Germany), with Mark Bolas (USC and Fakespace Labs) and Andreas Simon (Fraunhofer IMK).
- I3D 2001 Registration Chair, ACM Symposium on Interactive 3D Graphics (Chapel Hill, NC, USA).

Keynote/Plenary Talks

- ISTeC Distinguished Lecture, Colorado State University, Fort Collins, CO, November 13, 2023.
- IEEE Life Member Affinity Group Inaugural Meeting, Orlando, FL, December 21, 2022.
- 2nd Workshop on Replication in Extended Reality (WoRXR), ISMAR 2022, Singapore, Singapore, October 17, 2022.
- AI Colloquium, Pusan National University, December 2, 2021.
- Hoag Advances in Clinical Virtual Reality Symposium, October 1, 2021.
- Training XR: Workshop on 3D Content Creation for Simulated Training in eXtended Reality, IEEE Virtual Reality 2020, on line (originally Atlanta, GA USA), March 22, 2020.
- ChinaVR 2019, Shenzhen, China, November 24, 2019.
- 6th ACM Symposium on Spatial User Interaction, Berlin, Germany, October 13–14, 2018.
- New Knowledge and Innovations, Sarasota Memorial Health Care System, Sarasota, Florida, May 4, 2018.
- International Conference on Computer-Aided Design and Computer Graphics (CAD/Graphics), Zhangjiajie, China, August 26, 2017.
- Society for Design and Process Science conference (SDPS), Orlando, Florida, December 5, 2016.
- Annual Meeting of the Association for Information Science and Technology (ASIS&T), Copenhagen, Denmark, October 16, 2016.
- 22nd Annual Research Day, Sigma Theta Tau International Honor Society of Nursing, Theta Epsilon chapter, Winter Park, Florida, USA, April 8, 2014.
- Society for Computer Science, Workshop on Virtual Reality-Augmented Reality (GI VR-AR 2013), Würzburg, Germany, September 19, 2013. .
- International Symposium on Ubiquitous Virtual Reality (ISUVR), Daejeon, South Korea, August 23, 2012.
- Joint Virtual Reality Conference (JVRC), Fellbach, Germany, September 29, 2010.
- Winter Augmented Reality Meeting (WARM), Graz, Austria, February 24–25, 2010.
- Real Action, Virtual Environments (RAVE), Barcelona, Spain, March 4, 2009.
- Digital City Monitoring and Emergency Management (D2D), Shenzhen, China, October 25, 2008.
- Eurographics Symposium on Virtual Environments (EGVE), Eindhoven, The Netherlands, May 29, 2008.

Other Invited Talks (Selected)

- "The Virtual Experience Research Accelerator (VERA)," ISTeC Distinguished Lecture, Colorado State University, Fort Collins, CO, November 13, 2023.
- "Universal User Data (UUD) for Virtual Experience Research," Computer Science Department, Colorado State University, Fort Collins, CO, November 13, 2023.
- "The Virtual Experience Research Accelerator (VERA) and Universal User Data (UUD)," the 22nd IEEE International Symposium on Mixed and Augmented Reality (ISMAR), 3rd Workshop on Replication in Extended Reality (WoRXR), Sydney, Australia, October 16, 2023.

- "The Virtual Experience Research Accelerator (VERA) and Universal User Data (UUD)," the 22nd IEEE International Symposium on Mixed and Augmented Reality (ISMAR), 2nd Workshop on Inclusion, Diversity, Equity, Accessibility, Transparency, and Ethics in XR (IDEA-TExR), Sydney, Australia, October 20, 2023.
- "The Virtual Experience Research Accelerator (VERA)," The 5th XR Access Symposium, New York City, USA, June 15, 2023.
- "Embodied Agents for Simulating, Comforting, and Assisting Humans," 7th Annual IVRHA Virtual Reality and Healthcare Global Symposium, University of Pennsylvania Medicine, Philadelphia, PA. March 4, 2023.
- "How to XR: Hardware & Technology," World Economic Forum (WEF), Knowledge Lab with the Global Future Council on AR/VR 2021, April 29, 2021.
- "Personal Agents for Workplace (Nursing) Skills and Emotional Support," HCI and the Future of Work and Wellbeing: A Series of Conversations. May 7, 2020, online (Longwood, FL USA).
- "Physical-Virtual Training for Healthcare," International Women's Club of Gothenburg, May 26, 2020, Gothenburg, Sweden (via video during pandemic).
- "Aware and Influential Virtual Humans and Animals," Naval Postgraduate School, MOVES lecture, April 13, 2020, Monterey, CA (via video during pandemic).
- "Vera Real: Stroke assessment using a Physical Virtual Patient (PVP)" with Laura Gonzalez and Salam Daher (both UCF), 2019 Conference of the International Nursing Association for Clinical Simulation and Learning (INACSL), Phoenix, AZ, June 21, 2019.
- "Enhanced Perception & Cognition in Augmented Reality (EPiC AR)," Naval Postgraduate School, MOVES Open House, May 23, 2019, Monterey, CA.
- "Identifying User Physical States," XR Advance Webinar Series, Iowa State University, April 22, 2019. Lecture series was a follow-up to a June 2017 VR/AR Workshop sponsored by NSF.
- "Physical-Virtual Patients: Human Shape, Appearance, Awareness, and Influence," Virtual Reality & Health, Tucson, AZ, March 7, 2019.
- "Human Surrogates: Real, Virtual, and Augmented Shape, Appearance, and Intelligence," Rubin Center for Healthy Aging, Sarasota, Florida, March 3, 2019.
- "Awareness and Influence of Human Surrogates in Augmented Reality," 2017 International Conference on Computer-Aided Design and Computer Graphics (CAD/Graphics), Zhangjiajie, China, August 26, 2017.
- "Bridging the Telepresence Valley," 2016 Annual Meeting of the Association for Information Science and Technology (ASIS&T), Copenhagen, Denmark, October 16, 2016.
- "Human Surrogates and their Effects on Humans," Naval Postgraduate School, MOVES Institute, Simulation and Training Course, Monterey, CA, September 8, 2016.
- "Human Surrogates and their Effects on Humans," Technische Universität München (TU Munich), Garching b. Munich, Germany, June 28, 2016.
- "Interactive Rear-Projection Physical-Virtual Patient Simulators," Mini-Lecture at NextMed/MMVR22 (Medicine Meets Virtual Reality), Los Angeles, CA, April 7, 2016.
- "Making the Virtual Real: Virtual Reality, Augmented Reality, Physical-Virtual Reality," Examination Development & Research committee of the National Council of Architectural Registration Boards (NCARB), Phoenix, AZ, January 30, 2016.
- "My patient is a dummy—so why should I care?" classroom lecture, Rollins College (Winter Park, FL), hosted by Darin Hughes, November 11, 2015.
- "Making the Virtual Real: Physical Manifestations of Dynamic Virtual People, Objects, and Places," Qualcomm/Vienna University of Technology (Vienna, Austria), September 15, 2014.
- "Making the Virtual Real: Physical Manifestations of Dynamic Virtual People, Objects, and Places," Graz University of Technology (Graz, Austria), September 17, 2014.

- "Past and Current Research in Modeling and Reproducing Humans for Warfighter Training," Orlando VA Medical Center (Orlando, FL), August 26, 2014.
- "Making the Virtual Real: Physical Manifestations of Dynamic Virtual People, Objects, and Places," Harris Corporation, Melbourne, FL, February 18, 2014.
- "Face-to-Face: Interactive Simulation Using a Mobile Physical-Virtual Patient," work with Steven Talbert, Mary Lou Sole, and Karen J. Aroian, SNRS 28th Annual Conference, San Antonio, TX, February 15, 2014.
- "Physical-Virtual Humans for Healthcare," the University of Texas at San Antonio, San Antonio, TX, February 13, 2014.
- "Physical-Virtual Humans for Training and Teleportation," Max Planck Institute, Tübingen, Germany, September 17, 2013, and Bonn-Rhein-Sieg University of Applied Sciences, Bonn, Germany, September 20, 2013.
- "Interactive Shader Lamps: Projector-Based Graphics in Motion," GI VR-AR (Würzburg, Germany), September 19, 2013.
- "Physical-Virtual Humans for Training and Teleportation," TU Chemnitz (Chemnitz, Germany), June 6, 2013.
- "Physical-Virtual Humans: Challenges and Opportunities", KIST (Seoul, South Korea) and KAIST (ISUVR 2012, Daejeon, South Korea), August 22–23, 2012.
- "Physical Manifestations of Virtual Humans," Technische Universität München (TU Munich); Garching b. Munich, Germany; April 11, 2011.
- "Crossing Realities: The Convergence of Physical and Virtual Worlds," Microsoft Research; Redmond, WA; May 25, 2010.
- "Crossing Realities: An Overview of Related Work at UNC-Chapel Hill," Joint Virtual Reality Conference (JVRC); Lyon, France; December 7, 2009.
- "Virtual Artifacts and Experiences in Real Environments," second RAVE 2009 workshop (Real Action, Virtual Environments); Barcelona, Spain; March 4, 2009.
- "A Living, Breathing, Dynamic Digital City," D2D 2008 workshop (Digital City Monitoring and Emergency Management); Shenzhen, China; October 25, 2008.
- "Immersive Display Research at UNC-CH: A Sampling," with Henry Fuchs; Max Planck Institute, Tübingen, Germany; June 9, 2008..
- "Motion Tracking as an Epic Battle Between Information and Uncertainty," 14th Eurographics Symposium on Virtual Environments (EGVE 2008); Eindhoven, The Netherlands; May 29, 2008..
- "Improving, Expanding and Extending 3D Telepresence," International Workshop on Advanced Information Processing for Ubiquitous Networks, ICAT 2005; Christchurch, New Zealand; December 8, 2005..
- "3D Telepresence for Off-Line Surgical Training and On-Line Remote Consultation," 2nd CREST Symposium on Telecommunication, Teleimersion and Telexistence; University of Tokyo; December 9–10, 2004..
- "Immersive Telepresence for Surgical Teaching and Remote Consultation: Extending Medical Expertise Over Time and Space," University of Florida, Department of Computer and Information Science and Engineering; "Geometry, Graphics, Vision, Visualization/ Simulation (G2V2)" seminar series; October 17, 2003. .
- "Sensor Information Efficiency for Pose Estimation," University of Rochester, Department of Computer Science; April 13, 2001..
- "Inside the HiBall Tracking System," Siemens Corporate Research, Imaging and Visualization Department; Princeton, NJ; October 25, 2000..

- "Tracking for Interactive Computer Graphics: To the Hallway and Beyond," the Boeing Corporation, Virtual Reality Group, Seattle, WA, April 21, 1999. (Also presented at Microsoft Research; Seattle, WA; April 21, 1999.).
- "Spatially-Augmented Visualization," Walt Disney Imagineering, Virtual Reality Studio; Burbank, CA; September 1998..

Invited Workshop Participation

- The 22nd IEEE International Symposium on Mixed and Augmented Reality (ISMAR), 3rd Workshop on Replication in Extended Reality (WoRXR), Sydney, Australia, October 16, 2023.
- The 22nd IEEE International Symposium on Mixed and Augmented Reality (ISMAR), 2nd Workshop on Inclusion, Diversity, Equity, Accessibility, Transparency, and Ethics in XR (IDEATExR), Sydney, Australia, October 20, 2023.
- ACM SIGGRAPH Frontiers Workshop: Digital Avatars: Risks, Harms, Barriers, Opportunities, with Eakta Jain (Co-Organizer), Apu Kapadia (Co-Organizer), Theodore Kim, and Taslima Akter. August 6, 2023, Los Angeles, CA.
- Anticipating the Metaverse: The Future Of Mixed Reality, invitation-only Workshop at the University of Southern California Institute for Creative Technologies, Los Angeles, CA, March 24, 2023.
- ACM SIGGRAPH Frontiers Workshop: Content Generation for Workforce Training, with Holly Rushmeier (Organizer), Carolina Cruz-Neira, Eakta Jain, Rajesh Jha, Jerome Solomon, and Louise Yarnall. July 28, 2019, Los Angeles, CA.
- National Science Foundation (NSF) Principal Investigator workshop on the Future of Work at the Human-Technology Frontier (FW-HTF), "Panel: Augmented Reality in the Future of Work," with Joe Gabbard (moderator), Virginia Tech; Doug Bowman, Virginia Tech; Steve Feiner, Columbia University; and Henry Fuchs, University of North Carolina at Chapel Hill. April 5, 2019, NSF Headquarters (Alexandria, VA).
- Computing Community Consortium (CCC) Visioning Workshop: Content Generation for Workforce Training, March 14–15, 2019, Atlanta, GA.
- Computing Community Consortium (CCC) Computing Research Symposium: Addressing National Priorities and Societal Needs 2017, October 23–24, 2017, Washington, DC.
- National Science Foundation (NSF) Virtual Reality (VR)/Augmented Reality (AR) Workshop, July 17–18, 2017, Washington, DC.
- Computing Community Consortium (CCC) Visioning Workshop on Discovery & Innovation in Smart & Pervasive Health, December 5–6, 2016, Washington, DC.
- National Research Council (NRC) Mapping Science Committee meeting, October 3, 2012, National Academies Keck Center, Washington, DC, USA.
- Computing Community Consortium (CCC) Visioning Workshop on Spatial Computing, September 10–11, 2012, National Academies Keck Center, Washington, DC, USA.
- IMMERSCOM 2009 (2nd International Conference on Immersive Telecommunications), Panel with Jaron Lanier (Microsoft), Randy Harrell (CISCO), Frantz Lohier (Logitech), William C. Wickes (Hewlett Packard), and Zhengyou Zhang (Microsoft), May 29, 2009.

Panel Participation

- **Greg Welch**, Mindi Anderson, Desiree Díaz, Frank Guido-Sanz, and Elizabeth Wells-Beede, "Patents for Healthcare Simulation Technology: A Multidisciplinary Perspective," the 2024 International Meeting for Simulation in Healthcare, San Diego, CA, January 23, 2024.
- **Greg Welch**, Jeni Paay, Tim Chen, Bruce Thomas, Kim Vincs, Mark Billinghurst, and Aaron Quigley. "Why is XR still so hard to use?" The 22nd IEEE International Symposium on Mixed and Augmented Reality (ISMAR 2023), October 16, 2023, Sydney, Australia.
- **Greg Welch**, Tabitha Peck, Jonathan Beever, and Christine Hemphill. "The Virtual Experience Research Accelerator (VERA)," The 5th XR Access Symposium, New York City, USA, June 15, 2023.
- **Greg Welch**, Nahal Norouzii, Rosario Casas. "Approaching the Metaverse — An Overview & the State of the Art," Advertising in the Metaverse, 2022 American Academy of Advertising Annual Conference, March 24, 2022, St. Petersburg, FL USA.
- **Greg Welch**, Salam Daher, Laura Gonzalez, Jacob Stuart. "Workshop on Collaborations with Domain Experts for Virtual Agent Research (CoVAR)," Intelligent Virtual Agents (IVA 2020), October 18, 2020, online workshop (Longwood, FL USA).
- **Greg Welch**, Laura Gonzalez, Juan Cendan, Mindi Anderson. "Simulating Patients for Healthcare Training: Appearance, Shape, Influence, and Awareness," Serious Play Conference, Healthcare Track, July 25, 2019, Orlando, FL USA.
- Joe Gabbard (Virginia Tech), Doug Bowman (Virginia Tech), Steve Feiner (Columbia University), Henry Fuchs (University of North Carolina at Chapel Hill), and **Greg Welch** (UCF). "Augmented Reality in the Future of Work," National Science Foundation (NSF) Principal Investigator workshop on the Future of Work at the Human-Technology Frontier (FW-HTF), April 5, 2019, NSF Headquarters (Alexandria, VA).
- **Greg Welch** (UCF), Albert "Skip" Rizzo (University of Southern California), Maria Sanchez-Vives (Institute of Biomedical Research August Pi i Sunyer), and Petr Legkov (University of Osnabrück), "The Future Impact of Neuroscience and Cognitive Psychology on Virtual Environments," IEEE Conference on Virtual Reality and 3D User Interfaces (VR 2018), Reutlingen, Germany.
- Anthony Steed (University College London), Doron Friedman (IDC Herzliya), **Greg Welch** (UCF), Susumu Tachi (The University of Tokyo), and moderator Mel Slater (University of Barcelona). "Instantaneous Beaming to Distance Places — A Possible and Desirable Future?" IEEE Virtual Reality 2017, March 21, Los Angeles, CA USA.
- **Greg Welch** (UCF), Charles Hughes (UCF), Linda Gibson-Young (UCF), Chait Renduchintala (UCF), Peter Kincaid (UCF), Sarah Matthews (FL DOH), Tom Herring (FL DOH), "Technology & Public Health Use Now and in the Future," 2014 Florida Public Health Educational Meeting, Orlando, FL, August 1, 2014.
- Betty Mohler (Max Planck Institute for Biological Cybernetics), **Greg Welch** (UNC-CH), Daniel Thalmann (Nanyang Technological University and EPFL), and Victoria Interrante (University of Minnesota), "Avatars in Virtual Environments," IEEE Virtual Reality 2011 (VR 2011), Singapore, March 21, 2011.
- Randy Harrell (CISCO), Jaron Lanier (Microsoft), Frantz Lohier (Logitech), **Greg Welch** (UNC-CH), William C. Wickes (Hewlett Packard), and Zhengyou Zhang (Microsoft Research), IMMERSCOM 2009 (2nd International Conference on Immersive Telecommunications), May 29, 2009.
- Henry Fuchs, Bernd Fröhlich (Bauhaus-Universität Weimar), and **Greg Welch**, "Display Technology," 14th Eurographics Symposium on Virtual Environments (EGVE 2008), Eindhoven, The Netherlands, May 30, 2008.

– Barbara Hayes-Roth, Austin Henderson, Ramesh Jain, Lev Manovich, **Greg Welch**, and Gopal Pingali, "Experiential Telepresence: How Can Telepresence Research be Guided Towards Better End User Experience?" ACM SIGMM 2003 Workshop on Experiential Telepresence 2003 (ETP 2003), November 7, 2003, Berkeley, CA USA.

Graduated Ph.D. Advisees

- Austin Erickson, 2023: Understanding, Modeling, and Simulating the Discrepancy Between Intended and Perceived Image Appearance On Optical See-Through Augmented Reality Displays
- Nahal Norouzi, 2021: The Social and Behavioral Influences of Interactions with Virtual Dogs as Embodied Agents in Augmented and Virtual Reality
- Jason Hochreiter, 2019: Multi-Touch Detection and Semantic Response on Non-Parametric Rear-Projection Surfaces
- Myungho Lee, 2019: Mediated Physicality: Inducing Illusory Physicality of Virtual Humans Via Their Interactions With Physical Objects
- Salam Daher, 2018: Physical-Virtual Patient Simulators: Bringing Tangible Humanity to Simulated Patients
- Kangsoo Kim, 2018: Environmental Physical-Virtual Interactivity to Improve Social Presence With a Virtual Human in Mixed Reality
- Peter Lincoln, 2017 (UNC Chapel Hill, with Henry Fuchs): Low Latency Displays for Augmented Reality
- Christoph Resch, 2016 (TU München, with Gudrun Klinker): Enhancing Projective Spatial Augmented Reality in Industry: A Model Based Approach for Registration and Calibration
- Feng Zheng, 2015: Spatio-Temporal Registration in Augmented Reality
- Jinghe Zhang, 2013: Uncertainty-Driven Adaptive Estimation with Applications in Electrical Power Systems
- Peter Keitler, 2011 (TU München, with Gudrun Klinker): Management of Tracking and Tracking Accuracy in Industrial Augmented Reality Environments
- Adrian Ilie, 2010: On-Line Control of Active Camera Networks
- Hua Yang, 2008: Differential Tracking Through Sampling and Linearizing the Local Appearance Manifold
- B. Danette Allen: 2007, Hardware Design Optimization for Human Motion Tracking Systems
- Aditi Majumder, 2003: A Practical Framework To Achieve Perceptually Seamless Multi-Projector Displays
- Ruigang Yang, 2003: View-Dependent Pixel Coloring—A Physically-Based Approach for 2D View Synthesis
- Ramesh Raskar, 2001: Projector-Based Three Dimensional Graphics

---

Supervised Postdoctoral Scholars

- Dr. Nahal Norouzi, University of Central Florida, January 2022–May 2022.
- Dr. Kangsoo Kim, University of Central Florida, January 2019–December 2020.
- Dr. Salam Daher, University of Central Florida, January 2019–July 2019.
- Dr. Arjun Nagendran, University of Central Florida, August 2011–January 2013, with Dr. Charles Hughes (primary advisor/mentor).

Graduated M.S. and B.S. Honors Thesis Advisees

- Camila Acevedo Carillo, 2023 (UCF B.S. Computer Science, Advisor)
- Angelica Garcia, 2017 (UCF M.S. Modeling & Simulation, Advisor)
- Justin Grace, 2016: Recognizing Pain Using Novel Simulation Technology (UCF B.S.N. Honors in the Major, Committee Member)
- Krishna Kollu, 2012: Modeling the Neural Pathology of Parkinson's Disease (UNC B.S. C.S. Honors, Advisor)
- Caitlyn Losee, 2011: The Bathysphere: Motion Capture and Immersive Projection (UNC B.S. C.S. Honors, Advisor)

Student Advisees (All)

Camila Acevedo Carillo (current); Stephanie Liebel (current); Juanita Benjamin (current); Zubin Choudhary (current); Hiroshi Furuya (current); Matthew Gottsacker (current); Austin Erickson (2023, Ph.D.); Tiffany Losekamp (current, College of Nursing, with Mindi Anderson); Nahal Norouzi (2021, Ph.D.); Faith Sauber (2021); Indira Avendano (2021); Nafisa Mostofa (2021); Alyssa Feagans (2020); Jonathan Jules (2020); Alexis Lambert (2020); Yazdan Jamshidi (2019, M.S.); Jason Hochreiter (2019, Ph.D.); Brandon Belna (2018); Ryan Schubert (2018); Salam Daher (2018, Ph.D.); Kangsoo Kim (2018, Ph.D.); Stephanie Mutter (JUN–AUG 2018, NSF REU); Brandon Belna (JUN–AUG 2017, NSF REU); Peter Lincoln (2017, Ph.D., with Henry Fuchs); Christoph Resch (2016, Ph.D., TU München, with Gudrun Klinker); Kiran Pandit (JUN–AUG 2016, NSF REU); Feng Zheng (2015, Ph.D.); Ryan Patrick (2013, M.S.); Jinghe Zhang (2013, Ph.D.); Krishna Kollu (2012, B.S. Undergraduate Honors); Caitlyn Losee (2011, B.S. Undergraduate Honors); Peter Keitler (2011, Ph.D., TU München, with Gudrun Klinker); Adrian Ilie (2010, Ph.D.); Tianren Wang (2009–2011); Hua Yang (2008, Ph.D.); Danette Allen (2007, Ph.D.); Vincent Noel (2006, M.S.); Michael Noland (2006, M.S.); Aditi Majumder (2003, Ph.D.); Ruigang Yang (2003, Ph.D.); and Ramesh Raskar (2001, Ph.D.).

Student Committees

Samuel Cosgrove (current, M.S., Advisor Joe LaViola); Xinyu Hu (current, Ph.D., Advisor Ryan McMahan); Kyle Martin (current, Ph.D., Advisor Joe LaViola); Alec Moore (2022, Ph.D., Advisor Ryan McMahan); Kevin Pfeil (2022, Ph.D., Advisor Joe LaViola); Andres Vargas (2022, Ph.D., Advisor Joe LaViola); Sarah Braeger (2021, Ph.D., Advisor Hassan Foroosh); Corey Pittman (2021, Ph.D., Advisor Joe LaViola); Min Wang (2020, Ph.D., Advisor Hassan Foroosh); Alex Blate (2019, Ph.D., UNC, Advisor Henry Fuchs); Baoyuan Liu (2016, Ph.D., Amazon, Advisor Hassan Foroosh); Rick Skarbez (2016, Ph.D., UNC, Advisor Frederick P. Brooks and Mary Whitton); Alexandra Carson (2016, BSN Honors in the Major); Justin Grace (2016, BSN Honors in the Major, Advisor Kelly Allred); Monika Schaeffer (2011, M.S., Duke University, Advisor Ron Parr); Brian Clipp (2010, Ph.D., UNC, Advisor Marc Pollefeys); David Gallup (2010, Ph.D., UNC, Advisor Marc Pollefeys); Andrew Nashel (2010, Ph.D., UNC, Advisor Henry Fuchs); Tyler Johnson (2009, Ph.D., UNC, Advisor Henry Fuchs; Seon Joo Kim (2008, Ph.D., UNC, Advisor Marc Pollefeys); Philip McLeod (2008, Ph.D., University of Otago, Advisor Geoff Wyvill); Patrick Quirk (2006, M.S., UNC, Advisor Henry Fuchs); Kok-Lim

Low (2005, Ph.D., UNC, Advisor Anselmo Lastra); Lindsey McCarthy (2011, M.S. UNC Dentistry, Advisor Lucia Cevidanes); Michael Rosenthal (2005, Ph.D., UNC, Advisor Henry Fuchs); Benjamin Lok (2002, Ph.D., UNC, Advisor Frederick Brooks); Nicholas Vallidis (2002, Ph.D., UNC, Advisor Gary Bishop); Gopi Meenakshisundaram (2001, Ph.D., UNC, Advisor Dinesh Manocha); Mark Livingston (1998, Ph.D., UNC, Advisor Henry Fuchs); and Hans Weber (UNC, Advisor Gary Bishop).

Ph.D. Thesis Examiner (International)

- Ylva Hansdotter, "The Affordances of Immersive Virtual Reality for Stimulating Prosocial Behaviour: A Mixed-Methods Pro-Environmental Intervention Study," University College Dublin; Advisor: Prof. Lizbeth Goodman; 2022.
- Susanne Schmidt, "Blended Spaces: Perception and Interaction in Projection-Based Spatial Augmented Reality Environments," Universität Hamburg; Advisor: Dr. Simone Frintrop; 2020.
- Iana Podkosova, "Walkable Multi-User VR: The Effects of Physical and Virtual Colocation," Technische Universität Wien; Advisor: Dr. techn. Hannes Kaufmann, Priv.-Doz.; Second advisor: Dr. techn. Peter Ferschin, Ass. Prof; 2019.
- Michael Robert Marner, "Physical-Virtual Tools for Interactive Spatial Augmented Reality," The University of South Australia; Principal Supervisor: Prof. Bruce Hunter Thomas; Associate Supervisor Prof. Christian Sandor; 2013.
- Philip Grant McLeod, "Fast, Accurate Pitch Detection Tools for Music Analysis," the University of Otago; 2008.

Classroom Teaching

- *3D Computer Modeling and Animation*, First Year Seminar, UNC-CH, 2003–2007. Created the course, which was chosen by UNC from among competing First Year Seminar proposals. Awarded Computer Science Student Association *Excellence in Teaching* award, Spring 2007
- *Introduction to Programming (Java)*, UNC-CH, 2002–2003
- *Team Software Engineering*, UNC-CH, 2001 (Spring)
- *Exploring Virtual Worlds*, UNC-CH, 1997–1998
- NSF STC Center-Wide Lecture Series, coordinated within the Center, 1997
- *Computers: Power Tools for the Mind*, UNC-CH, 1995

Tutorials/Short Courses

- AR101 (An Introduction to Augmented Reality), 15th IEEE International Symposium on Mixed and Augmented Reality (ISMAR 2016), September 18, 2016. Mérida, México. **Greg Welch** with Mark Billinghurst, Tobias Höllerer, Dieter Schmalstieg, Gerhard Reitmayr, Kiyoshi Kiyokawa, and Steve Feiner.
- **Greg Welch**. "An Introduction to the Kalman Filter," NASA Langley Research Center, National Institute of Aerospace, Hampton, VA USA, November 5–6, 2014.
- **Greg Welch**. "Tracking: Beyond 15 Minutes of Thought" and "An Introduction to the Kalman Filter," University of Würzburg, Interactive Intelligent Spaces Summer School, Würzburg, Germany, September 13–14, 2013.

- **Greg Welch** and Gary Bishop. "An Introduction to the Kalman Filter," ACM SIGGRAPH 2001 tutorial, August 12, 2001, Los Angeles, CA USA.
- **Greg Welch**, Gerhard Reitmayr (Graz Univ. of Tech.), Vincent Lepetit (Swiss Federal Institute of Tech.), and Brian Clipp (UNC-Chapel Hill), "Tracking for AR Tracking Researchers," International Symposium on Mixed and Augmented Reality (ISMAR 2009), October 19, 2009.
- **Greg Welch** and Gary Bishop. "An Introduction to the Kalman Filter," ACM SIGGRAPH 2001 tutorial, August 12, 2001, Los Angeles, CA USA.
- B. Danette Allen, Gary Bishop and **Greg Welch**. "Tracking: Beyond 15 Minutes of Thought," ACM SIGGRAPH 2001 short course, August 12, 2001, Los Angeles, CA USA.
- **Greg Welch**. "An Introduction to the Kalman Filter," multi-day seminars offered periodically at UNC Chapel Hill, 1996–2009.

Patents

- U.S. #11,798,127, "Spatial Positioning of Targeted Object Magnification," with Gerd Bruder, Kangsoo Kim, and Zubin Choudhary.
- U.S. #11,729,448, "Intelligent Digital Interruption Management," with Matthew Gottsacker, Nahal Norouzi, and Gerd Bruder.
- U.S. #11,557,216, "Adaptive Visual Overlay for Anatomical Simulation," with Joseph LaViola II, Francisco Guido-Sanz, Gerd Bruder, Mindi Anderson, and Ryan Schubert.
- U.S. #11,550,470, "Grammar Dependent Tactile Pattern Invocation," with Gerd Bruder and Ryan McMahan.
- U.S. #11,535,261, "Medical Monitoring Virtual Human with Situational Awareness," with Gerd Bruder.
- U.S. #11,467,399, "Augmentation of Relative Pose In Co-located Devices," with Gerd Bruder.
- U.S. #11,410,270, "Intelligent Object Magnification for Augmented Reality Displays," with Gerd Bruder, Kangsoo Kim, and Zubin Choudhary.
- U.S. #11,287,971, "Visual-Tactile Virtual Telepresence," with Gerd Bruder and Ryan McMahan.
- U.S. #11,148,671, "Autonomous Systems Human Controller Simulation," with Gerd Bruder.
- U.S. #11,106,357, "Low Latency Tactile Telepresence," with Ryan McMahan and Gerd Bruder.
- U.S. #11,042,028, "Relative Pose Data Augmentation of Tracked Devices in Virtual Environments," with Gerd Bruder.
- U.S. #10,854,098, "Adaptive Visual Overlay Wound Simulation," with Joseph LaViola II, Francisco Guido-Sanz, Gerd Bruder, Mindi Anderson, and Ryan Schubert.
- U.S. #10,803,761, "Multisensory Wound Simulation," with Joseph LaViola II, Francisco Guido-Sanz, Gerd Bruder, Mindi Anderson, and Ryan Schubert.
- U.S. #10,410,541, "Physical-Virtual Patient Bed," with Karen Aroian, Steven Talbert, Kelly Allred, Patricia Weinstein, Arjun Nagendran, and Remo Pillat.
- U.S. #10,380,921, "Physical-Virtual Patient Bed System," with Arjun Nagendran, Mary Lou Sole, and Laura Gonzalez.
- U.S. #10,365,711, "Methods, Systems, and Computer Readable Media for Unified Scene Acquisition and Pose Tracking in a Wearable Display," with Henry Fuchs, Mingsong Dou, and Jan-Michael Frahm.
- U.S. #10,321,107, "Methods, Systems, and Computer Readable Media for Improved Illumination of Spatial Augmented Reality Objects," with Henry Fuchs.

- U.S. #9,808,549, "System for Detecting Sterile Field Events and Related Methods," with Arjun Nagendran, Jason Hochreiter, Laura Gonzalez, and Hassan Foroosh.
- U.S. #9,792,715, "Methods, Systems, and Computer Readable Media for Utilizing Synthetic Animatronics," with Kurtis Keller, Andrei State, Henry Fuchs, and Ryan Schubert.
- U.S. #9,679,500, "Physical-Virtual Patient Bed," with Karen Aroian, Steven Talbert, Kelly Allred, Patricia Weinstein, Arjun Nagendran, and Remo Pillat.
- U.S. #9,538,167, "Methods, Systems, and Computer Readable Media for Shader-Lamps Based Physical Avatars of Real and Virtual People," with Henry Fuchs, Peter Lincoln, Andrew Nashel, and Andrei State.
- U.S. #8,849,408, "Methods for Electronic Directionality of Deep-Brain Stimulation," with Richard Gilson and Nizam Razack.
- U.S. #7,068,274, "System and Method for Animating Real Objects With Projected Images," with Kok-Lim Low and Ramesh Raskar.
- U.S. #6,930,681, "System and Method for Registering Multiple Images with Three-Dimensional Objects," with Ramesh Raskar and Kok-Lim Low.
- U.S. #6,677,956, "Method for Cross-Fading Intensities of Multiple Images of a Scene for Seamless Reconstruction," with Ramesh Raskar and Kok-Lim Low.
- U.S. #5,870,136, "Dynamic Generation of Imperceptible Structured Light for Tracking and Acquisition of Three Dimensional Scene Geometry and Surface Characteristics in Interactive Three Dimensional Computer Graphics Applications," with Gary Bishop, Henry Fuchs, and Mark Livingston.

Books, Chapters, and Sections

- Gabriel Zachmann, Krzysztof Walczak, Omar A. Niamut, Kyle Johnsen, Wolfgang Stuerzlinger, Mariano Alcañiz-Raya, **Greg Welch**, and Patrick Bourdot *Virtual Reality and Mixed Reality: 20th EuroXR International Conference, EuroXR 2023, Rotterdam, The Netherlands, November 29 - December 1, 2023, Proceedings*. Lecture Notes in Computer Science. Springer Cham, 2023.
- Kangsoo Kim, Nahal Norouzi, Dongsik Jo, Gerd Bruder, and **Greg Welch**. *The Augmented Reality Internet of Things: Opportunities of Embodied Interactions in Transreality*, pages 797–829. Springer International Publishing, Cham, 2023.
- **Greg Welch**, Kalman Filter. In: Ikeuchi K. (eds) Computer Vision. Springer, Cham. `https://doi.org/10.1007/978-3-030-03243-2_716-1`
- Nahal Norouzi, Gerd Bruder, Brandon Belna, Stephanie Mutter, Damla Turgut, and **Greg Welch**. A Systematic Review of the Convergence of Augmented Reality, Intelligent Virtual Agents, and the Internet of Things, *Artificial Intelligence in IoT*, page 37. Springer, 2019.
- Bruce H. Thomas, **Greg Welch**, Pierre Dragicevic, Niklas Elmqvist, Pourang Irani, Yvonne Jansen, Dieter Schmalstieg, AurÃl'lien Tabard, Neven A. M. ElSayed, Ross T. Smith, Wesley Willett. Situated analytics. In K. Marriott, F. Schreiber, T. Dwyer, K. Klein, N. H. Riche, T. Itoh, W. Stuerzlinger, and B. H. Thomas, editors, *Immersive Analytics*, Lecture Notes in Computer Science book series (LNCS, volume 11190), chapter 7, pages 185–220. Springer, Cham, 2018.
- Guido Brunnett, Sabine Coquillart, Robert van Liere, **Greg Welch**, and Libor Váša, editors. *Virtual Realities: International Dagstuhl Seminar, Dagstuhl Castle Germany; June 9–14, 2013; Revised Selected Papers*. Number 8844 in Lecture Notes in Computer Science. ISBN: 978-3-319-17042-8, Springer, 2015.

- Charles Hughes, Arjun Nagendran, Lisa Dieker, Michael Hynes, and **Greg Welch**. Applications of avatar mediated interaction to teaching, training, job skills and wellness. In Brunnett, G., Coquillart, S., van Liere, R., Welch, G., and Váša, L., editors, *Virtual Realities*, volume 8844 of *Lecture Notes in Computer Science*, pages 133–146. Springer International, 2015.
- Arjun Nagendran, **Greg Welch**, Charles Hughes, and Remo Pillat. Technical report: Exploring human surrogate characteristics. In Brunnett, G., Coquillart, S., van Liere, R., Welch, G., and Váša, L., editors, *Virtual Realities*, volume 8844 of *Lecture Notes in Computer Science*, pages 215–228. Springer International, 2015.
- **Greg Welch**, Kalman Filter. In Katsushi Ikeuchi, editor, *Computer Vision: A Reference Guide*, pp. 435–437. Boston, MA: Springer US, 2014.
- Sabine Coquillart, Guido Brunnett, and **Greg Welch**, eds., *Virtual Realities: Dagstuhl Seminar 2008*. 1st Edition., 2011, XIII, 251 p. 78 illus. ISBN: 978-3-211-99177-0, Springer, 2011.
- **Greg Welch** and Larry Davis. Tracking for Training in Virtual Environments: Estimating the Pose of People and Devices for Simulation and Assessment. In J. Cohn, D. Nicholson, and D. Schmorrow, editors, *PSI Handbook of Virtual Environments for Training and Education: Developments for the Military and Beyond*, chapter 30. Praeger Security International, 2008.
- **Greg Welch**, Ruigang Yang, Bruce Cairns, Herman Towles, Andrei State, Adrian Ilie, Sasch Becker, Dan Russo, Jesse Funaro, Diane Sonnenwald, Ketan Mayer-Patel, Bonnie Danette Allen, Hua Yang, Eugene Freid, Andries van Dam, and Henry Fuchs. 3D Telepresence for Off-Line Surgical Training and On-Line Remote Consultation. In S. Tachi, editor, *Telecommunication, Teleimmersion and Telexistence II*, pages 113–152. IOS Press (English) and Ohmsha (Japanese), 2005.

Refereed Journal, Conference, and Symposium Publications

[165] Gerd Bruder, Michael Browne, Zubin Choudhary, Austin Erickson, Hiroshi Furuya, Matthew Gottsacker, Ryan Schubert, and **Greg Welch**. Visual factors Influencing Trust and Reliance with Augmented Reality Systems. *Journal of Vision Abstracts—Vision Sciences Society (VSS) Annual Meeting*, 2024.

[164] Juanita Benjamin, Austin Erickson, Matthew Gottsacker, Gerd Bruder, and **Greg Welch**. Evaluating Transitive Perceptual Effects Between Virtual Entities in Outdoor Augmented Reality. In *Proceedings of IEEE Virtual Reality (VR)*, pages 1–11, 2024.

[163] Laura Battistel, Matthew Gottsacker, **Greg Welch**, Gerd Bruder, Massimiliano Zampini, and Riccardo Parin. Chill or Warmth: Exploring Temperature's Impact on Interpersonal Boundaries in VR. In *Adjunct Proceedings of the IEEE Conference on Virtual Reality and 3D User Interfaces (IEEE VR): 2nd Annual Workshop on Multi-modal Affective and Social Behavior Analysis and Synthesis in Extended Reality (MASSXR)*, pages 1–3, 2024.

[162] Juanita Benjamin, Gerd Bruder, Carsten Neumann, Dirk Reiners, Carolina Cruz-Neira, and **Greg Welch**. Perception and proxemics with virtual humans on transparent display installations in augmented reality. In *Proceedings of the IEEE Conference on International Symposium on Mixed and Augmented Reality (ISMAR) 2023.*, pages 1–10, 2023.

[161] Zubin Choudhary, Gerd Bruder, and **Greg Welch**. Visual facial enhancements can significantly improve speech perception in the presence of noise. *IEEE Transactions on Visualization and Computer Graphics*, Special Issue on the 22nd IEEE International Symposium on Mixed and Augmented Reality (ISMAR), 2023.

[160] Ryan Schubert, Gerd Bruder, and **Greg Welch**. Intuitive user interfaces for real-time magnification in augmented reality. In *Proceedings of the ACM Symposium on Virtual Reality Software and Technology (VRST)*, pages 1–10, 2023. **Best Paper Award**.

[159] Zubin Choudhary, Gerd Bruder, and **Greg Welch**.. Visual hearing aids: Artificial visual speech stimuli for audiovisual speech perception in noise. In *Proceedings of the 29th ACM Symposium on Virtual Reality Software and Technology, 2023*, October 9 2023.

[158] Zubin Choudhary, Nahal Norouzi, Austin Erickson, Ryan Schubert, Gerd Bruder, and **Greg Welch**. Exploring the social influence of virtual humans unintentionally conveying conflicting emotions. In *Proceedings of the 30th IEEE Conference on Virtual Reality and 3D User Interfaces*, IEEE Virtual Reality 2023, 2023.

[157] Zubin Choudhary, Austin Erickson, Nahal Norouzi, Kangsoo Kim, Gerd Bruder, and **Greg Welch**. Virtual big heads in extended reality: Estimation of ideal head scales and perceptual thresholds for comfort and facial cues. *ACM Transactions on Applied Perception*, November 10, 2022.

[156] Matthew Gottsacker, Nahal Norouzi, Ryan Schubert, Frank Guido-Sanz, Gerd Bruder, and **Greg Welch**. Effects of environmental noise levels on patient handoff communication in a mixed reality simulation. In *28th ACM Symposium on Virtual Reality Software and Technology (VRST '22)*, pages 1–10, 2022.

[155] Robbe Cools, Matthew Gottsacker, Adalberto Simeone, Gerd Bruder, **Greg Welch**, and Steve Feiner. Towards a Desktop-AR Prototyping Framework: Prototyping Cross-Reality Between Desktops and Augmented Reality. In *Adjunct Proceedings of IEEE International Symposium on Mixed and Augmented Reality (ISMAR)*, 2022.

[154] Priscilla Ramos, Meelad Doroodchi, Austin Erickson, Hiiroshi Furuya, Juanita Benjamin, Gerd Bruder, and **Greg Welch**. Effects of optical see-through displays on self-avatar appearance in augmented reality. In *Proceedings of the International Symposium on Mixed and Augmented Reality (ISMAR)*. IEEE, 2022.

[153] Austin Erickson, Gerd Bruder, and **Greg Welch**. Analysis of the saliency of color-based dichoptic cues in optical see-through augmented reality. *Transactions on Visualization and Computer Graphics*, pages 1–15, 2022.

[152] Frank Guido-Sanz, Mindi Anderson, Steve Talbert, Desiree A. Diaz, **Greg Welch**, and Alyssa Tanaka. Using simulation to test validity and reliability of I-BIDS: A new handoff tool. *Simulation & Gaming*, 53(4):353–368, 2022.

[151] Nahal Norouzi, Kangsoo Kim, Gerd Bruder, Jeremy Bailenson, Pamela Wisniewski, and **Greg Welch**. The advantages of virtual dogs over virtual people: Using augmented reality to provide social support in stressful situations. *International Journal of Human Computer Studies*, 2022.

[150] Yifan Li, Kangsoo Kim, Austin Erickson, Nahal Norouzi, Jonathan Jules, Gerd Bruder, and **Greg Welch**. A scoping review of assistance and therapy with head-mounted displays for people who are visually impaired. *ACM Trans. Access. Comput.*, feb 2022.

[149] Jesus Ugarte, Nahal Norouzi, Austin Erickson, Gerd Bruder, and **Greg Welch**. Distant hand interaction framework in augmented reality. In *the 2022 IEEE Conference on Virtual Reality and 3D User Interfaces*, page 2. IEEE, 2022.

[148] Nahal Norouzi, Matthew Gottsacker, Gerd Bruder, Pamela Wisniewski, Jeremy Bailenson, and **Greg Welch**. Virtual humans with pets and robots: Exploring the influence of social priming on one's perception of a virtual human. In *Proceedings of the IEEE Conference on Virtual Reality and 3D User Interfaces (IEEE VR), Christchurch, New Zealand, 2022*, page 10, IEEE.

[147] Connor D. Flick, Courtney J. Harris, Nikolas T. Yonkers, Nahal Norouzi, Austin Erickson, Zubin Choudhary, Matthew Gottsacker, Gerd Bruder, and **Greg Welch**. Trade-offs in augmented reality user interfaces for controlling a smart environment. In *Symposium on Spatial User Interaction (SUI '21)*, pages 1–11, New York, NY, USA, 2021. Association for Computing Machinery.

[146] Zubin Choudhary, Jesus Ugarte, Gerd Bruder, and **Greg Welch**. Real-time magnification in augmented reality. In *Proceedings of the 2021 ACM Spatial User Interaction*, SUI 2021, pages 1–2. ACM, 2021.

[145] Matthew Gottsacker, Nahal Norouzi, Kangsoo Kim, Gerd Bruder, and **Greg Welch**. Diegetic representations for seamless cross-reality interruptions. In *Proceedings of the IEEE International Symposium on Mixed and Augmented Reality (ISMAR)*, page 10, 2021.

[144] Nahal Norouzi, Gerd Bruder, Austin Erickson, Kangsoo Kim, Jeremy Bailenson, Pamela J. Wisniewski, Charles E. Hughes, , and **Greg Welch**. Virtual animals as diegetic attention guidance mechanisms in 360-degree experiences. *IEEE Transactions on Visualization and Computer Graphics (TVCG) Special Issue on ISMAR 2021*, page 11, 2021.

[143] Austin Erickson, Dirk Reiners, Gerd Bruder, and **Greg Welch**. Augmenting human perception: Mediation of extrasensory signals in head-worn augmented reality. In *Proceedings of the 2021 International Symposium on Mixed and Augmented Reality*, ISMAR 2021, pages 1–4. IEEE, 2021.

[142] Mindi Anderson, Desiree Díaz, Steven Talbert, Laura Gonzalez, Syretta Spears, Melanie Keiffer, Frank Guido-Sanz, Helen Mills, Peggy Hill, and **Greg Welch**. Exploration of a capture and analysis system to identify what a good debriefer looks like. *Simulation in Healthcare*, 16(3):e46–e93, June 2021.

[141] Zubin Choudhary, Gerd Bruder, and **Greg Welch**. (2021). Scaled user embodied representations in virtual and augmented reality. In *Proceedings of the Workshop on User-Embodied Interaction in Virtual Reality (UIVR)*, pages 1–3.

[140] Hiroshi Furuya, Kangsoo Kim, Gerd Bruder, Pamela J. Wisniewski, and **Greg Welch**. (2021). *Autonomous Vehicle Visual Embodiment for Pedestrian Interactions in Crossing Scenarios: Virtual Drivers in AVs for Pedestrian Crossing*. In *Extended Abstracts of the 2021 CHI Conference on Human Factors in Computing Systems*, CHI EA '21, New York, NY, USA. Association for Computing Machinery.

[139] Zubin Choudhary, Matthew Gottsacker, Kangsoo Kim, Ryan Schubert, Jeanine Stefanucci, Gerd Bruder, and **Greg Welch**. (2021). Revisiting distance perception with scaled embodied cues in social virtual reality. IEEE Virtual Reality (VR), 2021.

[138] Mindi Anderson, Francisco Guido-Sanz, Desiree Díaz, Benjamin Lok, Jacob Stuart, Ilerioluwa Akinnola, and **Greg Welch**. (2021). Augmented reality in nurse practitioner education: Using a triage scenario to pilot technology usability and effectiveness. *Clinical Simulation in Nursing*, 54:105–112.

[137] Austin Erickson, Kangsoo Kim, Gerd Bruder, and **Greg Welch**. (2021). Beyond visible light: User and societal impacts of egocentric multispectral vision. In *In Proceedings of the 2021 International Conference on Virtual, Augmented, and Mixed Reality*, Washington D.C.

[136] Ryan Schubert, Gerd Bruder, Alyssa Tanaka, Francisco Guido-Sanz, and **Greg Welch**. (2021). Mixed reality technology capabilities for combat-casualty handoff training. In Chen, J. Y. C. and Fragomeni, G., editors, *Virtual, Augmented and Mixed Reality*, pages 695–711, Cham. Springer International Publishing.

[135] Austin Erickson, Kangsoo Kim, Alexa Lambert, Gerd Bruder, Michael Browne, and **Greg Welch**. (2021). An extended analysis on the benefits of dark mode user interfaces in optical see-through head-mounted displays. *ACM Transactions on Applied Perception*.

[134] Austin Erickson, Kangsoo Kim, Gerd Bruder, and **Greg Welch** (2020). A review of visual perception research in optical see-through augmented reality. In *In Proceedings of the International Conference on Artificial Reality and Telexistence & Eurographics Symposium on Virtual Environments*, page 9.

[133] Nahal Norouzi, Kangsoo Kim, Gerd Bruder, Austin Erickson, Zubin Choudhary, Yifan Li, and **Greg Welch** (2020). A systematic literature review of embodied augmented reality agents in head-mounted display environments. In *In Proceedings of the International Conference on Artificial Reality and Telexistence & Eurographics Symposium on Virtual Environments*, page 11.

[132] Celso M. de Melo, Kangsoo Kim, Nahal Norouzi, Gerd Bruder, and **Greg Welch** (2020). Reducing cognitive load and improving warfighter problem solving with intelligent virtual assistants. *Frontiers in Psychology*, 11:3170.

[131] **Greg Welch**, Ryan Schubert, Gerd Bruder, Derrick P. Stockdreher, and Adam Casebolt, "Augmented reality promises mentally and physically stressful training in real places," *IACLEA Campus Law Enforcement Journal*, vol. 50, pp. 47–50, September/October 2020.

[130] Austin Erickson, Kangsoo Kim, Gerd Bruder, and **Greg Welch**, "Exploring the limitations of environment lighting on optical see-through head-mounted displays," in *Proceedings of the ACM Symposium on Spatial User Interaction*, pp. 1–8, 2020.

[129] Alexis Lambert, Nahal Norouzi, Gerd Bruder, and **Greg Welch**, "A systematic review of ten years of research on human interaction with social robots," *International Journal of Human-Computer Interaction*, pp. 1–14, 2020.

[128] Laura Gonzalez, Salam Daher, and **Greg Welch**, "Neurological assessment using a physical-virtual patient (PVP)," *Simulation & Gaming*, pp. 1–17, August 12 2020.

[127] Salam Daher, Jason Hochreiter, Ryan Schubert, Laura Gonzalez, Juan Cendan, Mindi Anderson, Desiree A. Diaz, and **Greg Welch**, "The physical-virtual patient simulator: A physical human form with virtual appearance and behavior," *Simulation in Healthcare*, vol. 15, no. 2, pp. 115–121, 2020. See erratum at DOI: 10.1097/SIH.0000000000000481.

[126] Austin Erickson, Nahal Norouzi, Kangsoo Kim, Ryan Schubert, Jonathan Jules, Joeseph LaViola, Gerd Bruder, and **Greg Welch**. "Sharing gaze rays for visual target identification tasks in collaborative augmented reality," *Journal on Multimodal User Interfaces: Special Issue on Multimodal Interfaces and Communication Cues for Remote Collaboration*, p. 10, 2020.

[125] Ladda Thiamwong, Mary Lou Sole, Boon Peng, **Greg Welch**, Helen J. Huang, and Jeffrey R. Stout. Assessing fall risk appraisal through combined physiological and perceived fall risk measures using innovative technology. *Journal of Gerontological Nursing*, 46(4):41–47, March 2020.

[124] Austin Erickson, Nahal Norouzi, Kangsoo Kim, Joeseph LaViola, Gerd Bruder, and **Greg Welch**. Effects of depth information on visual target identification task performance in shared gaze environments. *IEEE Transactions on Visualization and Computer Graphics (TVCG)*, vol. 26, no. 5, pp. 1934–1944, 2020.

[123] Austin Erickson, Kangsoo Kim, Gerd Bruder, and **Greg Welch**. Effects of dark mode graphics on visual acuity and fatigue with virtual reality head-mounted displays. *Proceedings of IEEE International Conference on Virtual Reality and 3D User Interfaces (IEEE VR)*, pp. 434–442, 2020.

[122] Austin Erickson, Nahal Norouzi, Gerd Bruder, Pamela J. Wisniewski, and **Greg Welch**. Examining whether secondary effects of temperature-associated virtual stimuli influence subjective perception of duration. *Proceedings of IEEE International Conference on Virtual Reality and 3D User Interfaces (IEEE VR)*, pp. 492–499, 2020.

[121] Zubin Choudhary, Kangsoo Kim, Ryan Schubert, Gerd Bruder, and **Greg Welch**. Virtual big heads: Analysis of human perception and comfort of head scales in social virtual reality. *Proceedings of IEEE International Conference on Virtual Reality and 3D User Interfaces (IEEE VR)*, pp. 425–433, 2020.

[120] Kangsoo Kim, Celso M. de Melo, Nahal Norouzi, Gerd Bruder, and **Greg Welch**. Reducing task load with an embodied intelligent virtual assistant for improved performance in collaborative decision making. *Proceedings of IEEE International Conference on Virtual Reality and 3D User Interfaces (IEEE VR)*, pp. 529–538, 2020.

[119] Andrei State, Herman Towles, Tyler Johnson, Ryan Schubert, Brendan Walters, **Greg Welch**, and Henry Fuchs. The a-desk: A unified workspace of the future. *IEEE Computer Graphics and Applications*, 40(1):56–71, Jan 2020.

[118] Myungho Lee, Nahal Norouzi, Gerd Bruder, Pamela J. Wisniewski, and **Greg Welch**. Mixed reality tabletop gameplay: Social interaction with a virtual human capable of physical influence. *IEEE Transactions on Visualization and Computer Graphics*, 2020.

[117] Alyssa Tanaka, Brian Stensrud, **Greg Welch**, Francisco Guido-Sanz, Lee Sciarini, and Henry Phillips. The development and implementation of speech understanding for medical handoff training. In *Proceedings of 2019 Interservice/Industry Training, Simulation, and Education Conference (I/ITSEC 2019)*, Orlando, Florida, USA, December 4 2019.

[116] Kangsoo Kim, Nahal Norouzi, Tiffany Losekamp, Gerd Bruder, Mindi Anderson, and **Greg Welch**. Effects of patient care assistant embodiment and computer mediation on user experience. In *Proceedings of the IEEE International Conference on Artificial Intelligence & Virtual Reality (AIVR)*. IEEE, 2019, pp. 17–24. San Diego, CA. DOI: 10.1109/AIVR.2019.00013

[115] Nahal Norouzi, Gerd Bruder, Jeremy Bailenson, and **Greg Welch**. Investigating augmented reality animals as companions. In *Proceedings of the IEEE International Symposium on Mixed and Augmented Reality (ISMAR) Mixed/Augmented Reality and Mental Health Workshop, 2019*, page 4. IEEE, 2019.

[114] Kendra Richards, Nikhil Mahalanobis, Kangsoo Kim, Ryan Schubert, Myungho Lee, Salam Daher, Nahal Norouzi, Jason Hochreiter, Gerd Bruder, and **Greg Welch**. Analysis of peripheral vision and vibrotactile feedback during proximal search tasks with dynamic virtual entities in augmented reality. In *Proceedings of the ACM Symposium on Spatial User Interaction (SUI)*, page 9, New Orleans, LA, October 19 2019. Association of Computing Machinery, ACM.

[113] Kangsoo Kim, Austin Erickson, Aelxis Lambert, Gerd Bruder, and **Greg Welch**. Effects of dark mode on visual fatigue and acuity in optical see-through head-mounted displays. In *Proceedings of the ACM Symposium on Spatial User Interaction (SUI)*, page 9, New Orleans, LA USA, October 19 2019. ACM.

[112] Nahal Norouzi, Austin Erickson, Kangsoo Kim, Ryan Schubert, Joeseph J. LaViola Jr., Gerd Bruder, and **Greg Welch**. Effects of shared gaze parameters on visual target identification task performance in augmented reality. In *Proceedings of the ACM Symposium on Spatial User Interaction (SUI)*, page 11, New Orleans, LA USA, October 20 2019. Association of Computing Machinery., ACM. **Best Long Paper Award**.

[111] Austin Erickson, Kangsoo Kim, Ryan Schubert, Gerd Bruder, and **Greg Welch**. Is it cold in here or is it just me? Analysis of augmented reality temperature visualization for computer-mediated thermoception. In *Proceedings of the 18th IEEE International Symposium on Mixed and Augmented Reality (ISMAR 2019), Beijing, China, October 14–18, 2019*, 2019.

[110] Nahal Norouzi, Kangsoo Kim, Myungho Lee, Ryan Schubert, Austin Erickson, Jeremy Bailenson, Gerd Bruder, and **Greg Welch**. Walking your virtual dog: Analysis of awareness and proxemics with simulated support animals in augmented reality. In *Proceedings of the 18th IEEE International Symposium on Mixed and Augmented Reality (ISMAR 2019), Beijing, China, October 14–18, 2019*, 2019.

[109] Kangsoo Kim, Ryan Schubert, Jason Hochreiter, Gerd Bruder, and **Greg Welch**. Blowing in the wind: Increasing social presence with a virtual human via environmental airflow interaction in mixed reality. *Elsevier Computers and Graphics*, 83 (October 2019), pp. 23-32, 2019.

[108] Laura Gonzalez, Salam Daher, and **Greg Welch**, "Vera real : Stroke assessment using a physical virtual patient (PVP)," International Nursing Association for Clinical Simulation and Learning (INACSL), June 19, 2019.

[107] Mark Roman Miller, Hanseul Jun, Fernanda Herrera, Jacob Yu Villa, **Greg Welch**, and Jeremy N. Bailenson. Social interaction in augmented reality. *PLOS ONE*, 14(5), 2019. **Top cited PLOS ONE publication of 2019**.

[106] Alex Blate, Mary Whitton, Montek Singh, **Greg Welch**, Andrei State, Turner Whitted, and Henry Fuchs. Implementation & evaluation of a 50 khz, 28μs motion-to-pose latency head tracking instrument. *IEEE Transactions on Visualization and Computer Graphics*, 25(5):1970–1980, 2019.

[105] Myungho Lee, Gerd Bruder, and **Greg Welch**. The virtual pole: Exploring human responses to fear of heights in immersive virtual environments. *Journal of Virtual Reality and Broadcasting*, 14(2017)(6), 2019.

[104] Myungho Lee, Nahal Norouzi, Gerd Bruder, Pamela J. Wisniewski, and **Greg Welch**. The physical-virtual table: Exploring the effects of a virtual human's physical influence on social interaction. In *Proceedings of the 24th ACM Symposium on Virtual Reality Software and Technology*, VRST '18, pages 25:1–25:11, New York, NY, USA, 2018. ACM. **Best Paper Award**.

[103] Yazdan Jamshidi and **Greg Welch**. Mine the gap: Gap estimation and contact detection information via adjacent surface observation. In *Proceedings of the International Conference on Pattern Recognition and Artificial Intelligence*, PRAI 2018, pages 54–58, New York, NY, USA, 2018. ACM.

[102] Catherine Oh, Jeremy Bailenson, and **Greg Welch**. A systematic review of social presence: Definition, antecedents, and implications. *Frontiers in Robotics and AI*, 15 October 2018.

[101] Nahal Norouzi, Kangsoo Kim, Jason Hochreiter, Myungho Lee, Salam Daher, Gerd Bruder, and **Greg Welch**. A systematic survey of 15 years of user studies published in the intelligent virtual agents conference. In *Proceedings of the 18th ACM International Conference on Intelligent Virtual Agents (IVA 2018)*, Sydney, Australia, November 5–8 2018.

[100] Salam Daher, Jason Hochreiter, Nahal Norouzi, Laura Gonzalez, Gerd Bruder, and **Greg Welch**. Physical-virtual agents for healthcare simulation. In *Proceedings of 18th ACM International Conference on Intelligent Virtual Agents (IVA 2018)*. ACM, November 5–8 2018.

[99] Steffan Haesler, Kangsoo Kim, Gerd Bruder, and **Greg Welch**. Seeing is believing: Improving the perceived trust in visually embodied alexa in augmented reality. In *Proceedings of the 17th IEEE International Symposium on Mixed and Augmented Reality (ISMAR 2018), Munich, Germany, October 16–20, 2018*, 2018.

[98] Kangsoo Kim, Gerd Bruder, and **Greg Welch**. Blowing in the wind: Increasing copresence with a virtual human via airflow influence in augmented reality. In G. Bruder, S. Cobb, and S. Yoshimoto, editors, *ICAT-EGVE 2018 - International Conference on Artificial Reality and Telexistence and Eurographics Symposium on Virtual Environments*, Limassol, Cyprus, November 7–9 2018. **Honorable Mention for Best Paper Award**.

[97] Ryan Schubert, Gerd Bruder, and **Greg Welch**. Adaptive filtering of physical-virtual artifacts for synthetic animatronics. In G. Bruder, S. Cobb, and S. Yoshimoto, editors, *ICAT-EGVE 2018 - International Conference on Artificial Reality and Telexistence and Eurographics Symposium on Virtual Environments*, Limassol, Cyprus, November 7–9 2018.

[96] **Greg Welch**, Tianren Wang, Gerd Bruder, and Gary Bishop. A novel approach for cooperative motion capture (COMOCAP). In G. Bruder, S. Cobb, and S. Yoshimoto, editors, *ICAT-EGVE 2018 - International Conference on Artificial Reality and Telexistence and Eurographics Symposium on Virtual Environments*, Limassol, Cyprus, November 7–9 2018.

[95] Kangsoo Kim, Mark Billinghurst, Gerd Bruder, Henry B.-L. Duh, and **Greg Welch**, "Revisiting trends in Augmented Reality research: A review of the 2nd decade of ISMAR (2008–2017)," *IEEE Transactions on Visualization & Computer Graphics*, 2018.

[94] Kangsoo Kim, Luke Boelling, Steffen Haesler, Jeremy N. Bailenson, Gerd Bruder, and **Greg Welch**, "Does a digital assistant need a body? The influence of visual embodiment and social behavior on the perception of intelligent virtual agents in AR," in *2018 IEEE International Symposium on Mixed and Augmented Reality (ISMAR)*, 2018.

[93] Nahal Norouzi, Luke Bölling, Gerd Bruder, and **Greg Welch**, "Augmented rotations in virtual reality for users with a reduced range of head movement," in *Proceedings of the 12th international conference on disability, virtual reality and associated technologies (ICDVRAT 2018)*, p. 8, 2018.

[94] Nahal Norouzi, Gerd Bruder, and **Greg Welch**, "Assessing vignetting as a means to reduce vr sickness," in *ACM Symposium on Applied Perception 2018*, p. 8, ACM, 2018.

[92] Eike Langbehn, Frank Steinicke, Markus Lappe, **Greg Welch**, and Gerd Bruder, "In the blink of an eye –leveraging blink-induced suppression for imperceptible position and orientation redirection in virtual reality," *ACM Transactions on Graphics (ToG)*, vol. 37, no. 4, article 66, 11 pages, 2018.

[91] Glenn Taylor, Anthony Deschamps, Alyssa Tanaka, Denise Nicholson, Gerd Bruder, **Greg Welch**, and Francisco Guido-Sanz, "Augmented reality for tactical combat casualty care training," in *Human-Computer Interaction. User Interface Design, Development and Multimodality*, Springer International Publishing, 2018.

[90] Myungho Lee, Gerd Bruder, Tobias Höllerer, and **Greg Welch**, "Effects of unaugmented periphery and vibrotactile feedback on proxemics with virtual humans in ar," *IEEE Transactions on Visualization and Computer Graphics*, vol. 24, pp. 1525–1534, April 2018.

[89] Jason Hochreiter, Salam Daher, Gerd Bruder, and **Greg Welch**, "Cognitive and touch performance effects of mismatched 3D physical and visual perceptions," in *Proceedings of IEEE Virtual Reality 2018 (VR 2018)*, 18–22 March 2018 2018.

[88] Kangsoo Kim, Gerd Bruder, and **Greg Welch**, "Exploring the effects of observed physicality conflicts on real–virtual human interaction in augmented reality," in *Proceedings of the 2017 ACM Symposium on Virtual Reality Software (VRST 2017)*, (Gothenberg, Sweden), Association of Computing Machinery, November 8–10 2017. **Best Student Paper Award**.

[87] Salam Daher, Kangsoo Kim, Myungho Lee, Ryan Schubert, Gerd Bruder, Jeremy Bailenson, and **Greg Welch**, *Effects of Social Priming on Social Presence with Intelligent Virtual Agents*, vol. 10498 of *Lecture Notes in Artificial Intelligence*. Springer International Publishing, 2017.

[86] Kangsoo Kim, Arjun Nagendran, Jeremy N. Bailenson, Andrew Raij, Gerd Bruder, Myungho Lee, Ryan Schubert, Xin Yan, and **Gregory Welch**, "A large-scale study of surrogate physicality and gesturing on human–surrogate interactions in a public space," *Frontiers in Robotics and AI*, vol. 4, pp. 1–20, July 2017.

[85] Kangsoo Kim, Divine Maloney, Gerd Bruder, Jeremy N. Bailenson, and **Greg Welch**, "The effects of virtual human's spatial and behavioral coherence with physical objects on social presence in AR," *Computer Animation and Virtual Worlds*, vol. 28, no. 3-4, pp. 1–9, 2017.

[84] Ryan Schubert, Gerd Bruder, and **Greg Welch**, "Abstract: Mitigating perceptual error in synthetic animatronics using visual feature flow," in *Journal of Vision: Abstract Issue 2017*, vol. 17, No. 10, p. 331, May 2017.

[83] Myungho Lee, Gerd Bruder, and **Greg Welch**, "Abstract: Exploring the effect of vibrotactile feedback through the floor on social presence in an immersive virtual environment," in *Journal of Vision: Abstract Issue 2017*, vol. 17, no. 10, p. 357, May 2017.

[82] Myungho Lee, Gerd Bruder, and **Greg Welch**. Exploring the effect of vibrotactile feedback through the floor on social presence in an immersive virtual environment. *Proceedings of IEEE Virtual Reality 2017*, pp. 105–111, March 2017.

[81] **Greg Welch**, "Highlights of "immersive sciences" research in the U.S.A.: Augmented/virtual reality and human surrogates," in *Virtual Reality: A View from Overseas* (K. Kiyokawa, ed.), vol. 21, pp. 102–111, Virtual Reality Society of Japan, June 2016.

[80] Kangsoo Kim, Gerd Bruder, Divine Maloney, and **Greg Welch**. The influence of real human personality on social presence with a virtual human in augmented reality. In Reiners, D., Iwai, D., and Steinicke, F., editors, *ICAT-EGVE 2016 - International Conference on Artificial Reality and Telexistence and Eurographics Symposium on Virtual Environments*, pages 115–122. The Eurographics Association. Little Rock, AR, USA, December 7–9, 2016.

[79] Ryan Schubert, **Greg Welch**, Salam Daher, and Andrew Raij. HuSIS: A dedicated space for studying human interactions. *IEEE Computer Graphics and Applications*, 36(6):26–36, 2016.

[78] Myungho Lee, Kangsoo Kim, Salam Daher, Andrew Raij, Ryan Schubert, Jeremy Bailenson, and **Greg Welch**. The wobbly table: Increased social presence via subtle incidental movement of a real-virtual table. *Proceedings of IEEE Virtual Reality 2016*, Greenville, SC, USA, March 19–23, 2016.

[77] Jason Hochreiter, Salam Daher, Arjun Nagendran, Laura Gonzalez, and **Greg Welch**. Optical touch sensing on non-parametric rear-projection surfaces for interactive physical-virtual experiences. *Presence: Teleoperators and Virtual Environments*, 25(1), 2016.

[76] Eleazar Vasquez III, Arjun Nagendran, **Greg Welch**, Matthew T. Marino, Darin E. Hughes, Aaron Koch, and Lauren Delisio. Virtual learning environments for students with disabilities: A review and analysis of the empirical literature and two case studies. *Rural Special Education Quarterly*, 34(3):26–32, 2015.

[75] Jinghe Zhang, **Greg Welch**, Naren Ramakrishnan, and Saifur Rahman. Kalman filters for dynamic and secure smart grid state estimation. *Intelligent Industrial Systems*, pages 1–8, May 28, 2015.

[74] Kangsoo Kim, Arjun Nagendran, Jeremy Bailenson, and **Greg Welch**. Expectancy violations related to a virtual human's joint gaze behavior in real-virtual human interactions. *Proceedings 28th Annual Conference on Computer Animation and Social Agents (CASA 2015)*, pp. 5–8, May 11–13, 2015, Singapore, Singapore.

[73] Ning Zhou, Da Meng, Zhenyu Huang, and **Greg Welch**. Dynamic state estimation of a synchronous machine using PMU data: A comparative study. *IEEE Transactions on Smart Grid*, 6(1):450–460, 2015.

[72] Jason Hochreiter, Salam Daher, Arjun Nagendran, Laura Gonzalez, **Greg Welch**. Touch sensing on non-parametric rear-projection surfaces: A physical-virtual head for hands-on healthcare training. *Proceedings of IEEE Virtual Reality 2015*, pp. 69–74, Arles, France, March 23–27, 2015.

[71] Feng Zheng, Dieter Schmalstieg, and **Greg Welch**. Pixel-wise closed-loop registration in video-based augmented reality. *Proceedings of 2014 IEEE International Symposium on Mixed and Augmented Reality (ISMAR)*, Munich, Germany, September 2014.

[70] Julian Abich and Lauren Reinerman-Jones and Gerald Matthews and **Greg Welch** and Stephanie Lackey and Charles Hughes and Arjun Nagendran. Good enough yet? a preliminary evaluation of human-surrogate interaction. In *Virtual, Augmented and Mixed Reality. Designing and Developing Virtual and Augmented Environments*, R. Shumaker and S. Lackey, Eds., vol. 8525 of *Lecture Notes in Computer Science*. Springer International Publishing, 2014, pp. 239–250.

[69] Diane H. Sonnenwald, Hanna M. Söderholm, **Greg Welch**, Bruce A. Cairns, James E. Manning, and Henry Fuchs, "Illuminating collaboration in emergency health care situations: paramedic-physician collaboration and 3d telepresence technology," *Information Research*, (19)2, June, 2014.

[68] Arjun Nagendran, Remo Pillat, Adam Kavanaugh, **Greg Welch**, and Charles Hughes, "A Unified Framework for Individualized Avatar-Based Interactions," *Presence: Teleoperators and Virtual Environments*, 23(2), Spring 2014.

[67] Alberico Menozzi, Brian Clipp, Eric Wenger, Jared Heinly, Herman Towles, Jan-Michael Frahm, and **Greg Welch**, "Development of vision-aided navigation for a wearable outdoor augmented reality system," in *Proceedings of the IEEE/ION Position Location and Navigation Symposium* (Monterey, CA, USA, May 2014), IEEE/The Institute of Navigation, pp. 760–772.

[66] Jinghe Zhang, **Greg Welch**, Gary Bishop, and Zhenyu Huang, "A two-stage kalman filtering scheme for robust and real-time power systems state tracking," *IEEE Transactions on Sustainable Energy*, 5, 2 (April 2014), 629–636.

[65] Adrian Ilie and **Greg Welch**, "Online control of active camera networks for computer vision tasks." *ACM Transactions on Sensor Networks*, Vol. 10, No. 2, Article 25 (January 2014), 25:1–25:40.

[64] Arjun Nagendran, Remo Pillat, Adam Kavanaugh, **Greg Welch**, and Charles Hughes, "AMITIES: Avatar-mediated interactive training and individualized experience system," *Proceedings of The 19th ACM Symposium on Virtual Reality Software and Technology (VRST2013)*, October 6-8 2013.

[63] David Roberts, Alberico Menozzi, James Cook, Todd Sherrill, Stephen Snarski, Pat Russler, Brian Clipp, Robert Karl, Eric Wenger, Matthew Bennett, Jennifer Mauger, William Church, Herman Towles, Stephen MacCabe, Jeffrey Webb, Jasper Lupo, Jan-Michael Frahm, Enrique Dunn, Christopher Leslie, and **Greg Welch**, "Testing and evaluation of a wearable augmented reality system for natural outdoor environments," *Proc. SPIE*, vol. 8735, pp. 87350A–87350A–16, 2013.

[62] Amela Sadagic, Mathias Kölsch, **Greg Welch**, Chumki Basu, Chris Darken, Juan P. Wachs, Henry Fuchs, Herman Towles, Neil Rowe, Jan-Michael Frahm, Li Guan, Rakesh Kumar, and Hui Cheng, "Smart instrumented training ranges: bringing automated system solutions to support critical domain needs," *The Journal of Defense Modeling and Simulation: Applications, Methodology, Technology*, vol. 10, no. 3, pp. 327–342, 2013.

[61] Adrian Ilie and **Greg Welch**, "Automated camera selection and control for better training support," in *Foundations of Augmented Cognition* (D. Schmorrow and C. Fidopiastis, eds.), vol. 8027 of *Lecture Notes in Computer Science*, pp. 50–59, Springer Berlin Heidelberg, 2013.

[60] Feng Zheng, Ryan Schubert, and **Greg Welch**, "A general approach for closed-loop registration in AR," in *Proceedings of IEEE Virtual Reality 2013*, (Orlando, FL, USA), March 16—23 2013.

[59] Arjun Nagendran, Remo Pillat, Charles Hughes, and **Greg Welch**, "Continuum of virtual-human space: Towards improved interaction strategies for physical-virtual avatars," in *Proceedings of 11th ACM SIGGRAPH International Conference on Virtual-Reality Continuum and its Applications in Industry (VRCAI 2012)*, IEEE, December 2012.

[58] Ryan Schubert, **Greg Welch**, Peter Lincoln, Arjun Nagendran, Remo Pillat, and Henry Fuchs, "Advances in shader lamps avatars for telepresence," in *Proceedings of 3DTV-Conference 2012: The True Vision: Capture, Transmission and Display of 3D Video*, (ETH Zurich, Zurich, Switzerland), October 15–17 2012.

[57] Ning Zhou, Zhenyu Huang, Yulan Li, and **Greg Welch**, "Local Sequential Ensemble Kalman Filter for Simultaneously Tracking States and Parameters," in Proceedings of 2012 North American Power Symposium, (Urbana-Champaign, IL USA), September 9–11 2012.

[56] Ning Zhou, Zhenyu Huang, **Greg Welch**, and Jinghe Zhang, "Identifying the optimal measurement subspace for the ensemble kalman filter," *IET Electronics Letters*, vol. 48, no. 11, May 2012.

[55] Diego Rivera-Gutierrez, **Greg Welch**, Peter Lincoln, Mary Whitton, Juan Cendan, David A. Chesnutt, Henry Fuchs, and Ben Lok. Shader lamps virtual patients: the physical representation of virtual patients. *Medicine Meets Virtual Reality 19 - NextMed*, Studies in Health Technology and Informatics, IOS Press, 2012.

[54] **Greg Welch**, Diego Rivera-Gutierrez, Peter Lincoln, Mary Whitton, Juan Cendan, David A. Chesnutt, Henry Fuchs, Ben Lok, and Rick Skarbez. Physical manifestations of virtual patients. In *Simulation in Healthcare*, Volume 6, Issue 6, December, 2011.

[53] Adrian Ilie and **Greg Welch**. On-Line Control of Active Camera Networks for Computer Vision Tasks. Proceedings of 5th ACM/IEEE International Conference on Distributed Smart Cameras, August 22–25, 2011. Awarded 2nd **Prize Best ICDSC 2011 Paper.**

[52] Jinghe Zhang, **Greg Welch**, and Gary Bishop. LoDiM: A Novel Power System State Estimation Method with Dynamic Measurement Selection. In *Proceedings of 2011 IEEE Power & Energy Society General Meeting*, (Detroit, MI, USA), 26–29 July 2011.

[51] Jinghe Zhang, **Greg Welch**, Gary Bishop, and Zhenyu Huang. Reduced Measurement-Space Dynamic State Estimation (REMEDYSE) for Power Systems. Proceedings of *PowerTech, 2011 IEEE Trondheim* (Trondheim, Norway), 19–23 June 2011.

[50] Jinghe Zhang, **Greg Welch**, and Gary Bishop. Power System State Estimation with Dynamic Optimal Measurement Selection. *Proceedings of 2011 IEEE Symposium on Computational Intelligence Applications in Smart Grid*, (Paris, France), 11–15 April 2011.

[49] Peter Lincoln, **Greg Welch**, and Henry Fuchs. Continual Surface-Based Multi-Projector Blending for Moving Objects. *Proceedings of the IEEE Virtual Reality 2011*, (Singapore), 19–23 March, 2011.

[48] **Greg Welch**, Diane H. Sonnenwald, Henry Fuchs, Bruce Cairns, M.D., Ketan Mayer-Patel, Ruigang Yang, Andrei State, Herman Towles, Adrian Ilie, Srinivas Krishnan, and Hanna M. Söderholm. Remote 3D Medical Consultation, in *Virtual Realities: Dagstuhl Seminar 2008* (S. Coquillart, G. Brunnett, and G. Welch, eds.), Ch. 8, pp. 139–160, Springer, 2011.

[47] Peter Lincoln, **Greg Welch**, Andrew Nashel, Andrei State, Adrian Ilie, and Henry Fuchs. Animatronic Shader Lamps Avatars. *Virtual Reality* (Springer), special issue on Augmented Reality, pp. 1–14, 2010. This is an extended version of [43].

[46] Jinghe Zhang, **Greg Welch**, Gary Bishop, and Zhenyu Huang. Optimal PMU Placement Evaluation for Power System Dynamic State Estimation. In *Proceedings of IEEE PES Conference on Innovative Smart Grid Technologies Europe (ISGT 2010)*, Chalmers Lindholmen, Göteborg, Sweden, October 10–13, 2010.

[45] Jinghe Zhang, **Greg Welch**, and Gary Bishop. Observability and Estimation Uncertainty Analysis for PMU Placement Alternatives. In *Proceedings of the 2010 North American Power Symposium (NAPS 2010)*, Arlington, TX, U.S.A., September 26–28, 2010.

[44] Amela Sadagic, **Greg Welch**, Chumki Basu, Chris Darken, Rakesh Kumar, Henry Fuchs, Hui Cheng, Jan-Michael Frahm, Mathias Kolsch, Neil Rowe, Herman Towles, Juan Wachs, and Anselmo Lastra. New Generation of Instrumented Ranges: Enabling Automated Performance Analysis. In *Proceedings of 2009 Interservice/Industry Training, Simulation, and Education Conference (I/ITSEC-2009)*, Orlando, Florida, U.S.A., November 30–December 3 2009.

[43] Peter Lincoln, **Greg Welch**, Andrew Nashel, Adrian Ilie, Andrei State, and Henry Fuchs. Animatronic Shader Lamps Avatars. *Proceedings of 8th IEEE and ACM International Symposium on Mixed and Augmented Reality (ISMAR'09)*, October 19–22, 2009.

[42] Hua Yang, **Greg Welch**, Jan-Michael. Frahm, and Marc Pollefeys. 3D Motion Segmentation Using Intensity Trajectory. *Proceedings of the* 9th *Asian Conference on Computer Vision (ACCV 2009)*, September 23–27 2009.

[41] Peter Lincoln, Andrew Nashel, Adrian Ilie, Herman Towles, **Greg Welch**, and Henry Fuchs. Multi-View Lenticular Display for Group Teleconferencing. *Proceedings of IMMERSCOM 2009*, 27–29 May 2009.

[40] **Greg Welch**, Diane H. Sonnenwald, Henry Fuchs, Bruce Cairns, Ketan Mayer-Patel, Hanna M. Söderholm, Ruigang Yang, Andrei State, Herman Towles, Adrian Ilie, Manoj K. Ampalam, Srinivas Krishnan, Vincent Noel, Michael Noland, and James E. Manning. 3D medical collaboration technology to enhance emergency healthcare. *J Biomed Discov Collab*, 4:4, 2009.

[39] Tyler Johnson, **Greg Welch**, Eric Laforce, Herman Towles, and Henry Fuchs. A distributed cooperative framework for continuous multi-projector pose estimation. Proceedings of IEEE Virtual Reality 2009, Mar 14–18, 2009.

[38] **Greg Welch**. HISTORY: The Use of the Kalman Filter for Human Motion Tracking in Virtual Reality, Presence: Teleoperators and Virtual Environments, 18(1), 2009.

[37] Hanna M. Söderholm, Diane H. Sonnenwald, James E. Manning, Bruce Cairns, **Greg Welch**, and Henry Fuchs. Exploring the Potential of Video Technologies for Collaboration in Emergency Medical Care. Part II: Task Performance, Journal of the American Society for Information Science and Technology (JASIST), 59(14):2335–2349, 14 August 2008.

[36] Diane H. Sonnenwald, Hanna M. Söderholm, James E. Manning, Bruce Cairns, **Greg Welch**, and Henry Fuchs. Exploring the Potential of Video Technologies for Collaboration in Emergency Medical Care. Part I: Information Sharing, Journal of the American Society for Information Science and Technology (JASIST), 59(14):2320–2334, 14 August 2008.

[35] Marc Pollefeys, David Nistér, Jan-Michael Frahm, Amir Akbarzadeh, Philippos Mordohai, Brian Clipp, Chris Engels, David Gallup, Seon Joo Kim, Paul Merrell, C. Salmi, Sudipta Sinha, Brad Talton, Liang Wang, Qing-Xiong Yang, Henrik Stewénius, Ruigang Yang, **Greg Welch**, and Herman Towles, Detailed Real-Time Urban 3D Reconstruction From Video, International Journal of Computer Vision (IJCV), special issue on "Modeling Large-Scale 3D Scenes, 2007.

[34] Hanna M. Söderholm, Diane H. Sonnenwald, Bruce Cairns, James Manning, **Greg Welch**, and Henry Fuchs, The Potential Impact of 3D Telepresence Technology on Task Performance in Emergency Trauma Care, proceedings of the ACM Group 2007 Conference, November 4–7 2007.

[33] Brian Clipp, **Greg Welch**, Jan-Michael Frahm, and Marc Pollefeys, Structure From Motion via a Two-Stage Pipeline of Extended Kalman Filters, in Proceedings of the British Machine Vision Conference (BMVC 2007), September 10–13 2007.

[32] Hua Yang, Marc Pollefeys, **Greg Welch**, Jan-Michael Frahm, and Adrian Ilie, Differential Camera Tracking Through Linearizing the Local Appearance Manifold, in Proceedings of the 2007 IEEE Computer Society Conference on Computer Vision and Pattern Recognition (CVPR' 07), 2007.

[31] Diane H. Sonnenwald, Hanna Maurin, Bruce Cairns, Eugene Freid, James Manning, **Greg Welch**, and Henry Fuchs. Experimental Comparison of the Use of 2D and 3D Telepresence Technologies in Distributed Emergency Medical Situations. In Proceedings of the American Society of Information Science and Technology (ASIS&T 2006), Austin, Texas, November 3–9, 2006.

[30] Hua Yang and **Greg Welch**. Illumination Insensitive Model-Based 3D Object Tracking and Texture Refinement. In Proceedings of the Third International Symposium on 3D Data Processing, Visualization and Transmission (3DPVT 2006), The University of North Carolina at Chapel Hill, Chapel Hill, NC USA, June 14-16, 2006.

[29] **Greg Welch**, Diane Sonnenwald, Ketan Mayer-Patel, Ruigang Yang, Andrei State, Herman Towles, Bruce Cairns, and Henry Fuchs, Remote 3D Medical Consultation. In Proceedings

of *BROADNETS: 2nd IEEE/CreateNet International Conference on Broadband Networks*, (Boston, MA, USA), pp. 103-110, Omnipress, October 2005.

[28] B. Danette Allen and **Greg Welch**. A general method for comparing the expected performance of tracking and motion capture systems. In *VRST '05: Proceedings of the ACM symposium on Virtual reality software and technology*, (Monterey, CA, USA), pp. 201–210, ACM Press, New York, NY, USA, November 2005.

[27] Adrian Ilie and **Greg Welch**. Ensuring Color Consistency Across Multiple Cameras. In Proceedings of the 2005 International Conference on Computer Vision (ICCV 2005), October, 2005 (Beijing, China).

[26] **Greg Welch**, Ruigang Yang, Sascha Becker, Adrian Ilie, Dan Russo, Jesse Funaro, Andrei State, Kok-Lim Low, Anselmo Lastra, Herman Towles, Bruce Cairns, M.D., Henry Fuchs, and Andy van Dam. Immersive Electronic Books for Surgical Training. *IEEE Multimedia*, 12(3):22–35, July–September 2005.

[25] Ruigang Yang, Marc Pollefeys, Hua Yang, and **Greg Welch**. A Unified Approach to Real-Time, Multi-Resolution, Multi-Baseline 2D View Synthesis and 3D Depth Estimation Using Commodity Graphics Hardware. *International Journal of Image and Graphics (IJIG)*, 4(4):1–25, 2004.

[24] Adrian Ilie, Kok-Lim Low, **Greg Welch**, Anselmo Lastra, Henry Fuchs, and Bruce Cairns. Combining Head-Mounted and Projector-Based Displays for Surgical Training. *Presence: Teleoperators and Virtual Environments*, 13(2), April 2004. This is an extended version of [22].

[23] Ruigang Yang, Marc Pollefeys, and **Greg Welch**. Dealing With Textureless Regions and Specular Highlights—A Progressive Space Carving Scheme Using a Novel Photo-Consistency Measure. In Bill Triggs and Andrew Zisserman, editors, *Proceedings of 9th International Conference on Computer Vision*, pages 576–584, Nice, France, 2003. IEEE Computer Society.

[22] Kok-Lim Low, Adrian Ilie, **Greg Welch**, and Anselmo Lastra. Combining Head-Mounted and Projector-Based Displays for Surgical Training. In *Proceedings of the IEEE Virtual Reality 2003*, pages 110–117. IEEE Computer Society, 2003.

[22] Ruigang Yang and **Greg Welch**. Real-time consensus-based scene reconstruction using commodity graphics hardware. Computer Graphics Forum (invited submission), 22(2):207–216, 2003.

[20] Ruigang Yang, **Greg Welch**, Gary Bishop, and Herman Towles. (2002). Real-time view synthesis using commodity graphics hardware. In *ACM SIGGRAPH 2002 Conference Abstracts and Applications*, SIGGRAPH '02, pages 240–240, New York, NY, USA. ACM.

[19] **Greg Welch** and Eric Foxlin. Motion Tracking: No Silver Bullet, But a Respectable Arsenal. *IEEE Computer Graphics and Applications*, 22(6):24–38, 2002.

[18] Ruigang Yang, **Greg Welch**, and Gary Bishop. Real-Time Consensus-Based Scene Reconstruction Using Commodity Graphics Hardware. In *Proceedings of Pacific Graphics 2002*, Tsinghua University, Beijing, China, October 9–11 2002.

[17] Rich Superfine, Gary Bishop, Jeremy Cummings, Jay Fisher, Kurtis Keller, G. Matthews, D. Sill, Russell M. Taylor II, Leandra Vicci, Chris Weigle, **Greg Welch** and Benjamin Wilde. Touching In Biological Systems: A 3D Force Microscope. MSA—Microscopy and Microanalysis 2002, Quebec City, Canada. published in Proceedings of MSA—Microscopy and Microanalysis 2002.

[16] Ruigang Yang and **Greg Welch**. Fast Image Segmentation and Smoothing Using Commodity Graphics Hardware. J. Graph. Tools, 7(4):91–100, 2002.

[15] Ruigang Yang and **Greg Welch**. Automatic Projector Display Surface Estimation Using Every-Day Imagery. In *Proceedings of the 9th International Conference in Central Europe on Computer Graphics, Visualization and Computer Vision 2001*. Plzen, Czech Republic, 2001.

[14] **Greg Welch**, Gary Bishop, Leandra Vicci, Stephen Brumback, Kurtis Keller, and D'nardo Colucci. High-Performance Wide-Area Optical Tracking: The Hiball Tracking System. *Presence: Teleoperators and Virtual Environments*, 10(1):1–21, 2001. This is an invited (but refereed) extended version of [7].

[13] Kok-Lim Low, **Greg Welch**, Anselmo Lastra, and Henry Fuchs. Life-sized Projector-Based Dioramas. In *Proceedings of the ACM Symposium on Virtual Reality Software and Technology*, page 8. ACM SIGGRAPH, AddisonWesley, Banff Cantre, Banff, Alberta, Canada (November 15–17, 2001), 2001.

[12] Wei-Chao Chen, Herman Towles, Lars Nyland, **Greg Welch**, and Henry Fuchs. Toward a Compelling Sensation of Telepresence: Demonstrating a Portal to a Distant (Static) Office. In *Proceedings of IEEE Visualization 2000*. IEEE Computer Science Press, Salt Lake City, UT, USA (October 8–13), 2000.

[11] Aditi Majumder, Zhu He, Herman Towles, and **Greg Welch**. Achieving color uniformity across multi-projector displays." In *Proceedings of the conference on Visualization '00*, VIS '00, (Los Alamitos, CA, USA), pp. 117–124, IEEE Computer Society Press, 2000.

[10] **Greg Welch**, Henry Fuchs, Ramesh Raskar, Michael Brown, and Herman Towles. Projected Imagery in Your Office in the Future. *IEEE Computer Graphics and Applications*, 20(4):62–67, July/August 2000.

[9] Gary Bishop and **Greg Welch**. Working in the Office of 'Real Soon Now'. *IEEE Computer Graphics and Applications*, 20(4):76–78, July/August 2000.

[8] Ramesh Raskar, Michael Brown, Ruigang Yang, Wei-Chao Chen, **Greg Welch**, Herman Towles, Brent Seales, and Henry Fuchs. Mutli-Projector Displays Using Camera-Based Registration. In *Proceedings of the Conference on Visualization 99*, IEEE Visualization, pages 161–168. San Francisco, CA, USA (October 24–29), 1999.

[7] **Greg Welch**, Gary Bishop, Leandra Vicci, Stephen Brumback, Kurtis Keller, and D'nardo Colucci. The Hiball Tracker: High-Performance Wide-Area Tracking for Virtual and Augmented Environments. In *Proceedings of the ACM Symposium on Virtual Reality Software and Technology*, pages 1–11. ACM SIGGRAPH, Addison-Wesley, University College London, London, United Kingdom (December 20–23), 1999.

[6] Brent Seales, **Greg Welch**, and Christopher Jaynes. Real-Time Depth Warping for 3-D Scene Reconstruction. In *1999 IEEE Aerospace Conference*, Snowmass at Aspen, CO USA, 1999.

[5] Ramesh Raskar, **Greg Welch**, and Henry Fuchs. Seamless Projection Overlaps Using Warping and Intensity Blending. In *Fourth International Conference on Virtual Systems and Multimedia (VSMM)*, Gifu, Japan, 1998.

[4] Ramesh Raskar, **Greg Welch**, Matt Cutts, Adam Lake, Lev Stesin, and Henry Fuchs. The Office of the Future: A Unified Approach to Image-Based Modeling and Spatially Immersive Displays. In Michael F. Cohen, editor, *Computer Graphics*, Annual Conference on Computer Graphics & Interactive Techniques, pages 179–188. ACM Press, Addison-Wesley, Orlando, FL, USA (July 19–24), SIGGRAPH conference proceedings edition, 1998.

[3] **Greg Welch** and Gary Bishop. SCAAT: Incremental Tracking with Incomplete Information. In Turner Whitted, editor, *Computer Graphics*, Annual Conference on Computer Graphics & Interactive Techniques, pages 333–344. ACM Press, Addison-Wesley, Los Angeles, CA, USA (August 3–8), SIGGRAPH 97 Conference Proceedings edition, 1997.

[2] **Greg Welch**. *SCAAT: Incremental Tracking with Incomplete Information*. Ph.D. dissertation, University *of* North Carolina *at* Chapel Hill, 1996.

[1] **Greg Welch**. A Survey of Power Management Techniques in Mobile Computing Operating Systems. *ACM Operating Systems Review (SIGOPS-OSR)*, 29(4):47–56, 1995.

Refereed Workshop Publications

[14] Kangsoo Kim and **Greg Welch**. Maintaining and Enhancing Human-Surrogate Presence in Augmented Reality. *Proceedings of IEEE ISMAR 2015 Workshop on Human Perception and Psychology in Augmented Reality*, September 29, 2015 (Fukuoka, Japan).

[13] Adrian Ilie, **Greg Welch**, and Marc Macenko. A Stochastic Quality Metric for Optimal Control of Active Camera Network Configurations for 3D Computer Vision Tasks, in Proceedings of ECCV 2008 workshop on Multi-camera and Multi-modal Sensor Fusion Algorithms and Applications, Marseille, France, October 18 2008. European Conference on Computer Vision (ECCV).

[12] Brian Clipp, Rahul Raguram, Jan-Michael Frahm, **Greg Welch**, and Marc Pollefeys, A Mobile 3D City Reconstruction System, IEEE Virtual Reality 2008 workshop on Cityscapes, March 9, 2008, Reno, Nevada, USA

[11] Philippos Mordohai, Jan-Michael Frahm, Amir Akbarzadeh, Brian Clipp, Chris Engels, David Gallup, Paul Merrell, C. Salmi, Sudipta Sinha, Brad Talton, Liang Wang, Qing-Xiong Yang, Henrik StewÂŐnius, Herman Towles, **Greg Welch**, Ruigang Yang, Marc Pollefeys, and David Nistér, Real-time video-based reconstruction of urban environments, in Proceedings of the ISPRS Working Group V/4 Workshop 3D-ARCH 2007: 3D Virtual Reconstruction and Visualization of Complex Architectures, (ETH Zurich, Switzerland), July 12–13 2007.

[10] **Greg Welch**, B. Danette Allen, Adrian Ilie, and Gary Bishop, Measurement Sample Time Optimization for Human Motion Tracking/Capture Systems, Proceedings of Trends and Issues in Tracking for Virtual Environments, Workshop at the IEEE Virtual Reality 2007 Conference (Charlotte, NC USA) (Gabriel Zachmann, ed.), Shaker, March 11 2007.

[9] **Greg Welch**, Michael Noland, and Gary Bishop, Complementary Tracking and Two-Handed Interaction for Remote 3D Medical Consultation with a PDA, Proceedings of Trends and Issues in Tracking for Virtual Environments, Workshop at the IEEE Virtual Reality 2007 Conference (Charlotte, NC USA) (Gabriel Zachmann, ed.), Shaker, March 11 2007.

[8] Ruigang Yang, Liang Wang, **Greg Welch**, and Marc Pollefeys. Stereovision on GPU. In Proceedings of the 2006 Workshop on Edge Computing Using New Commodity Architectures (EDGE 2006), May 23–24 (Chapel Hill, NC, USA).

[7] **Greg Welch**, Hua Yang, Andrei State, Vincent Noel, Adrian Ilie, Ruigang Yang, Marc Pollefeys, and Henry Fuchs. GPU-Based View Synthesis Using an Orbital Reconstruction Frustum. In Proceedings of the 2006 Workshop on Edge Computing Using New Commodity Architectures (EDGE 2006), May 23–24 (Chapel Hill, NC, USA).

[6] Ramesh Raskar, **Greg Welch**, Kok-Lim Low, and Deepak Bandyopadhyay. Shader Lamps: Animating Real Objects with Image-Based Illumination. In S. J. Gortler and K. Myszkowski, editors, *Rendering Techniques 2001, Proceedings of the Eurographics Workshop in London, United Kingdom*, pages 89–102. Springer, NewYork, University College London (UCL), London, England, 2001.

[5] Aditi Majumder and **Greg Welch**. Computer Graphics Optique: Optical Superposition of Projected Computer Graphics. In *Fifth Immersive Projection Technology Workshop, in conjunction with the Seventh Eurographics Workshop on Virtual Environments*, Stuttgart, Germany, 2001. Springer-Verlag.

[4] Ramesh Raskar, **Greg Welch**, and Wei-Chao Chen. Table-top Spatially-Augmented Reality: Bringing Physical Models to Life with Projected Imagery. In *Second International Workshop on Augmented Reality (IWAR?99)*, pages 64–71. San Francisco, CA, USA, 1999.

[3] Ramesh Raskar, **Greg Welch**, and Henry Fuchs. Spatially Augmented Reality. In Reinhold Behringer, Gudrun Klinker, and David Mizell, editors, *Augmented Reality; Placing Artificial Objects in Real ScenesProceedings of the First IEEE Workshop on Augmented Reality (IWAR?98)*, pages 63–72. A.K. Peters Ltd., San Francisco, CA, USA (November 1, 1998), 1998. ISBN 1-56881-098-9. "Long Lasting Impact Paper" award, 15th IEEE International Symposium on Mixed and Augmented Reality (ISMAR 2016).

[2] Ramesh Raskar, Matthew Cutts, **Greg Welch**, and Wolfgang Stüerzlinger. Efficient Image Generation for Multiprojector and Multisurface Displays. In George Drettakis and Nelson Max, editors, *Proceedings of the Eurographics Workshop in Vienna, Austria*, pages 139–144. Springer Verlag, Vienna, Austria (June 29–July 1), rendering techniques 98 edition, 1998. ISBN 3-211-83213-0.

[1] Ronald T. Azuma, Bruce R. Hoff, Howard E. Neely III, Ronald Sarfaty, Michael J. Daily, Gary Bishop, Vernon Chi, **Greg Welch**, Ulrich Neumann, Suya You, Rich Nichols, and Jim Cannon. Making Augmented Reality Work Outdoors Requires Hybrid Tracking. In *First International Workshop on Augmented Reality*, pages 219–224, San Francisco, CA, USA, 1998.

Invited and Other Publications

[16] Pearly Chen, Mark Griswold, Hao Li, Sandra Lopez, Nahal Norouzi, and **Greg Welch**. Immersive media technologies: The acceleration of augmented and virtual reality in the wake of COVID-19. *World Economic Forum*, June 20, 2022.

[15] **Greg Welch**, Gerd Bruder, Peter Squire, and Ryan Schubert. Anticipating widespread augmented reality: Insights from the 2018 ar visioning workshop. Faculty Scholarship and Creative Works 786, University of Central Florida and Office of Naval Research, August 6 2019.

[14] **Greg Welch**. The rise of allocentric interfaces and the collapse of the virtuality continuum. In *Proceedings of the Symposium on Spatial User Interaction*, SUI '18, pages 192–192, New York, NY, USA, 2018. ACM.

[13] Laura Gonzalez, Salam Daher, Jason Hochreiter, and **Greg Welch**. (2016). Student nursing assessment of discrete neurology symptoms using an interactive physical virtual head. Presentation at the 2016 meeting of the *International Nursing Association for Clinical Simulation and Learning*, June 16, 2016.

[12] **Greg Welch**, Arjun Nagendran, Jeremy Bailenson, Charles Hughes, Pete Muller, and Peter Squire (2014). Mastering the Human Element of Immersive Training, in *Naval Science and Technology Future Force*, Fall 2014:10–13.

[11] Giodo Brunnett, Sabine Coquillart, Robert van Liere, and **Greg Welch**, "Virtual Realities (Dagstuhl Seminar 13241)," *Dagstuhl Reports*, vol. 3, no. 6, pp. 38–66, 2013.

[10] **Greg Welch**, Physical-virtual humans: Challenges and opportunities. In *Ubiquitous Virtual Reality (ISUVR), 2012 International Symposium on*, pp. 10 –13, aug. 2012.

[9] Guido Brunnett, Saine Coquillart, and **Greg Welch**, "08231 abstracts collection – virtual realities," in *Virtual Realities* (Guido Brunnett, Sabine Coquillart, and **Greg Welch**, eds.), no. 08231 in Dagstuhl Seminar Proceedings, (Dagstuhl, Germany), Schloss Dagstuhl - Leibniz-Zentrum fuer Informatik, Germany, 2008.

[8] Amir Akbarzadeh, Jan-Michael Frahm, Philippos Mordohai, Brian Clipp, Chris Engels, David Gallup, Paul Merrell, Michael Phelps, Sudipta Sinha, Brad Talton, Liang Wang, Qing-Xiong Yang, Henrik Stewenius, Ruigang Yang, **Greg Welch**, Herman Towles, David Nistér, and Marc Pollefeys. Towards Urban 3D Reconstruction From Video. In Proceedings of the Third International Symposium on 3D Data Processing, Visualization and Transmission (3DPVT 2006), Chapel Hill, NC, June 2006.

[7] Andrei State, **Greg Welch**, and Adrian Ilie. An Interactive Camera Placement and Visibility Simulator for Image-Based VR Applications. In *Proceedings of the Engineering Reality of Virtual Reality 2006 (3D Imaging, Interaction, and Measurement; IS&T/SPIE 18th Annual Symposium on Electronic Imaging Science and Technology)*, San Jose, CA, January 2006.

[6] **Greg Welch**, Henry Fuchs, Bruce Cairns, Ketan Mayer-Patel, Diane H. Sonnenwald, Ruigang Yang , Andrei State, Herman Towles, Adrian Ilie, Michael Noland, Vincent Noel, and Hua Yang. Improving, Expanding and Extending 3D Telepresence. In *Proceedings of the 2005 International Workshop on Advanced Information Processing for Ubiquitous Networks*, with ICAT 2005, Christchurch, New Zealand, December 8, 2005.

[5] Hua Yang and **Greg Welch**. Model-Based 3D Object Tracking Using an Extended-Extended Kalman Filter and Graphics Rendered Measurements. In *Proceedings of* 1st *Computer Vision for Interactive and Intelligent Environments (CV4IIE) workshop*, University of Kentucky, Lexington, KY.

[4] **Greg Welch**, Ruigang Yang, Bruce Cairns, M.D., Herman Towles, Andrei State, Adrian Ilie, Sascha Becker, Dan Russo, Jesse Funaro, Diane Sonnenwald, Ketan Mayer-Patel,B. Danette Allen, Hua Yang, Eugene Freid, M.D., Andy van Dam, and Henry Fuchs. 3D Telepresence for Off-Line Surgical Training and On-Line Remote Consultation. Susumu Tachi, editor, *Proceedings of ICAT CREST Symposium on Telecommunication, Teleimmersion, and Telexistence*, The University of Tokyo, Tokyo, Japan, December 2004.

[3] Andries van Dam, Henry Fuchs, Sascha Becker, Loring Holden, Adrian Ilie, Kok-Lim Low, Anne Morgan Spalter, Ruigang Yang, and **Greg Welch**. Immersive Electronic Books for Teaching Surgical Procedures. In Susumu Tachi, editor, *Proceedings of ICAT CREST Symposium on Telecommunication, Teleimmersion, and Telexistence*, The University of Tokyo, Tokyo, Japan, December 2002.

[2] **Greg Welch** and Gary Bishop. An Introduction to the Kalman Filter: SIGGRAPH 2001 course 8. In *Computer Graphics*, Annual Conference on Computer Graphics & Interactive Techniques. ACM Press, Addison-Wesley, Los Angeles, CA, USA (August 12–17), SIGGRAPH 2001 course pack edition, 2001.

[1] Bonnie Danette Allen, Gary Bishop, and **Greg Welch**. Tracking: Beyond 15 Minutes of Thought: SIGGRAPH 2001 course 11. In *Computer Graphics*, Annual Conference on Computer Graphics & Interactive Techniques. ACM Press, Addison-Wesley, Los Angeles, CA, USA (August 12–17), SIGGRAPH 2001 course pack edition, 2001.

Refereed Posters and Presentations

[36] Austin Erickson, Gerd Bruder, and **Greg Welch**. Adapting Michelson Contrast for Use With Optical See-Through Displays. In *In Adjunct Proceedings of the IEEE International Symposium on Mixed and Augmented Reality*, pages 1–2. IEEE, IEEE, 2022.

[35] M. Gottsacker, Riaffa Syamil, Pamela J. Wisniewski, Gerd Bruder, Carolina Cruz-Neira, and **Greg Welch**. Poster: Exploring cues and signaling to improve cross-reality interruptions. In *Adjunct Proceedings of IEEE International Symposium on Mixed and Augmented Reality (ISMAR)*, 2022.

[34] Austin Erickson, Gerd Bruder, and **Greg Welch**. Poster: Modeling luminance contrast for optical see-through displays. In *Adjunct Proceedings of IEEE International Symposium on Mixed and Augmented Reality (ISMAR)*, 2022.

[33] Austin Erickson, Gerd Bruder, **Greg Welch**, Isaac Bynum, Tabitha Peck, and Jessica Good. Perceived Humanness Bias in Additive Light Model Displays. In *Vision Sciences Society (VSS) Abstracts* (Poster Presentation), 2022.

[32] Jesus Ugarte, Nahal Norouzi, Austin Erickson, Gerd Bruder, and **Greg Welch**. Distant Hand Interaction Framework in Augmented Reality. In *Proceedings of IEEE Virtual Reality (VR)*, pages 1–2, 2022.

[31] Zubin Choudhary, Jesus Ugarte, Gerd Bruder, and **Greg Welch**. Real-Time Magnification in Augmented Reality. In *Proceedings of ACM Symposium on Spatial User Interaction (SUI)*, pages 1–2, 2021. **Best Demo Award**.

[30] Zubin Choudhary, Gerd Bruder, and **Greg Welch**. Scaled User Embodied Representations in Virtual and Augmented Reality. In *Proceedings of the Workshop on User-Embodied Interaction in Virtual Reality (UIVR)*, pages 1–3, 2021.

[29] Austin Erickson, Dirk Reiners, Gerd Bruder, and **Greg Welch**. Augmenting Human Perception: Mediation of Extrasensory Signals in Head-Worn Augmented Reality. In Poster Proceedings of the *IEEE International Symposium on Mixed and Augmented Reality (ISMAR)*, pages 1–4, 2021.

[28] Francisco Guido-Sanz, Mindi Anderson, Desiree Díaz, **Greg Welch**, and Laura Gonzalez. (2021). POSTER: Using XR Technology to Innovate Healthcare Education. In *2021 International Nursing Association for Clinical Simulation and Learning Conference (INACSL 2021)*.

[27] Nafisa Mostofa, Indira Avendano, Ryan P. McMahan, and **Greg Welch**. (2020). POSTER: Tactile Telepresence for Isolated Patients. In Kulik, A., Sra, M., Kim, K., and Seo, B.-K., editors, *ICAT-EGVE 2020 - International Conference on Artificial Reality and Telexistence and Eurographics Symposium on Virtual Environments - Posters and Demos*, pages 7–8. The Eurographics Association.

[26] Sharare Zehtabian, Siavash Khodadadeh, Kangsoo Kim, Gerd Bruder, **Greg Welch**, Ladislau Bölöni, and Damla Turgut. (2020). An Automated Virtual Receptionist for Recognizing Visitors and assuring mask wearing. In *Proceedings of the International Conference on Artificial Reality and Telexistence & Eurographics Symposium on Virtual Environments*, pages 9–10.

[25] Jacob Stuart, Ileri Akinnola, Frank Guido-Sanz, Mindi Anderson, Desiree Diaz, **Greg Welch**, Ben Lok J. Stuart, I. Akinnola, F. Guido-Sanz, M. Anderson, D. Diaz, G. Welch, and B. Lok, "Poster: Applying stress management techniques in augmented reality: Stress induction and reduction in healthcare providers during virtual triage simulation," in *2020 IEEE Conference on Virtual Reality and 3D User Interfaces Abstracts and Workshops (VRW)*, pp. 171–172, 2020.

[24] Kangsoo Kim, Austin Erickson, Alexis Lambert, Gerd Bruder, and **Greg Welch**. Effects of dark mode on visual fatigue and acuity in optical see-through head-mounted displays. In *32nd ACM User Interface Software and Technology Symposium (UIST 2019)*, New Orleans, LA USA, October 2019.

[23] Nahal Norouzi, Austin Erickson, Kangsoo Kim, Ryan Schubert, Joeseph LaViola, Gerd Bruder, and **Greg Welch**. Effects of shared gaze parameteres on visual target identification task performance in augmented reality. In *32nd ACM User Interface Software and Technology Symposium (UIST 2019)*, New Orleans, LA USA, October 2019.

[22] Kendra Richards, Nikhil Mahalanobis, Kangsoo Kim, Ryan Schubert, Myungho Lee, Salam Daher, Nahal Norouzi, Jason Hochreiter, Gerd Bruder, and **Greg Welch**. Analysis of peripheral vision and vibrotactile feedback during proximal search tasks with dynamic virtual entities in augmented reality. In *32nd ACM User Interface Software and Technology Symposium (UIST 2019)*, New Orleans, LA USA, October 2019.

[21] Salam Daher, Jason Hochreiter, Nahal Norouzi, Ryan Schubert, Gerd Bruder, Laura Gonzalez, Mindi Anderson, Desiree Diaz, Juan Cendan, and **Greg Welch**. Matching vs. non-matching visuals and shape for embodied virtual healthcare agents. IEEE VR 2019 (Osaka, Japan), March 27, 2019.

[20] Ladda Thiamwong, Nahal Norouzi, and **Greg Welch**, "Fear of falling and eye movement behavior in young adults and older adults during walking: A case study," in *39th Annual Southern Gerontological Society Meeting*, (Buford, GA USA), April 11–14 2018.

[19] Dongsik Jo, Kangsoo Kim, **Greg Welch**, Woojin Jeon, Yongwan Kim, Ki-Hong Kim, Gerard Kim, "The Impact of Avatar-Owner Visual Similarity on Body Ownership in Immersive Virtual Reality," ACM Symposium on Virtual Reality Software and Technology (VRST), November 8–10, Gothenburg, Sweden.

[18] Myungho Lee, Gerd Bruder, and **Greg Welch**, "Exploring the effect of vibrotactile feedback through the floor on social presence in an immersive virtual environment," Vision Sciences Society 2017.

[17] Ryan Schubert, Gerd Bruder, and **Greg Welch**, "Mitigating perceptual error in synthetic animatronics using visual feature flow," Vision Sciences Society 2017.

[16] Richard Skarbez, **Greg Welch**, Frederick P. Brooks Jr., and Mary C. Whitton, "Coherence changes gaze behavior in virtual human interactions," in *Proceedings of IEEE Virtual Reality 2017*, pp. 287–288, March 2017.

[15] Salam Daher, Kangsoo Kim, Myungho Lee, Gerd Bruder, Ryan Schubert, Jeremy Bailenson, and **Greg Welch**, "Can social presence be contagious? Effects of social presence priming on interaction with virtual humans," in *Proceedings of IEEE Symposium on 3D User Interfaces 2017*, (Los Angeles , CA), March 18–19 2017.

[15] Kangsoo Kim, Ryan Schubert, and **Greg Welch**. Poster: Exploring the impact of environmental effects on social presence with a virtual human. In *Proceedings of the 16th International Conference on Intelligent Virtual Agents (IVA 2016)*, volume 10011, pages 470–474, Los Angeles, CA, September 20–23, 2016.

[14] **Greg Welch**, Salam Daher, Jason Hochreiter and Laura Gonzalez. Interactive Rear-Projection Physical-Virtual Patient Simulators. Poster presented at the 22nd Medicine Meets Virtual Reality (NextMed / MMVR) conference, Los Angeles, CA, April 7–9, 2016.

[13] Salam Daher and **Greg Welch**. Humanikins: Humanity Transfer to Physical Manikins. Poster presented at the 22nd Medicine Meets Virtual Reality (NextMed / MMVR) conference, Los Angeles, CA, April 7–9, 2016.

[12] Salam Daher, Kangsoo Kim, Myungho Lee, Andrew Raij, Ryan Schubert, Jeremy Bailenson, and **Greg Welch**. Poster: Exploring social presence transfer in real-virtual human interaction. In *Proceedings of IEEE Virtual Reality 2016*, Greenville, SC, USA, March 19–23, 2016.

[11] Salam Daher, Laura Gonzalez, **Greg Welch**. Preliminary Assessment of Neurologic Symptomatology Using an Interactive Physical-Virtual Head with Touch. Poster presented at the 17th International Meeting on Simulation in Healthcare (IMSH 2016), January 16–20, 2016.

[10] Feng Zheng, Ryan Schubert, and **Greg Welch**, "A General Approach for Closed-Loop Registration in AR," in *ISMAR '12: Proceedings of the Eleventh IEEE International Symposium on Mixed and Augmented Reality (ISMAR'12)*, (Atlanta, GA, USA), November 2012.

[9] **Greg Welch**, Diego Rivera-Gutierrez, Peter Lincoln, Mary Whitton, Juan Cendan, David A. Chesnutt, Henry Fuchs, Ben Lok, and Rick Skarbez. Physical manifestations of virtual patients. Poster presented at the 12th International Meeting on Simulation in Healthcare (IMSH 2011), 2011.

[8] Jinghe Zhang, **Greg Welch**, Gary Bishop, and Zhenyu Huang. Adaptive kalman filtering for robust power system state tracking. Poster presented at the DOE Applied Mathematics Program meeting, October 17–18 2011.

[7] Brian Clipp, **Greg Welch**, Jan-Michael Frahm, and Marc Pollefeys. Structure from motion via a two-stage pipeline of extended kalman filters. Proceedings of the British Machine Vision Conference (BMVC 2007), September 10–13 2007.

[6] Hua Yang and **Greg Welch**. Illumination Insensitive Model-Based 3D Object Tracking and Texture Refinement. In Proceedings of the Third International Symposium on 3D Data Processing, Visualization and Transmission (3DPVT 2006), The University of North Carolina at Chapel Hill, Chapel Hill, NC USA, June 14-16, 2006.

[5] Ruigang Yang, Liang Wang, **Greg Welch**, and Marc Pollefeys. Stereovision on GPU. Poster presentation at the 2006 Workshop on Edge Computing Using New Commodity Architectures (EDGE 2006), May 23–24 (Chapel Hill, NC, USA).

[4] **Greg Welch**, Hua Yang, Andrei State, Vincent Noel, Adrian Ilie, Ruigang Yang, Marc Pollefeys, and Henry Fuchs. GPU-Based View Synthesis Using an Orbital Reconstruction Frustum. Poster presentation at the 2006 Workshop on Edge Computing Using New Commodity Architectures (EDGE 2006), May 23–24 (Chapel Hill, NC, USA).

[3] Adrian Ilie and **Greg Welch**. Ensuring Color Consistency Across Multiple Cameras. International Conference on Computer Vision (ICCV), October, 2005 (Beijing, China).

[2] Bruce A. Cairns, **Greg Welch**, Adrian Ilie, Ruigang Yang, Kok-Lim Low, Anselmo Lastra, Henry Fuchs, and Anthony Meyer. Three Dimensional (3D) Acquisitition and Display of Reality: The Potential for a 'Holodeck' in Trauma Surgery. Presented at *The American Association for the Surgery of Trauma 2003 Annual Meeting.*

[1] Kok-Lim Low, **Greg Welch**, Anselmo Lastra, and Henry Fuchs. Life-sized projector-based dioramas: Spatially real and visually virtual. In *ACM SIGGRAPH 2001 Sketches and Applications*, August 2001.

Technical Reports

[13] Tyler Johnson, Herman Towles, Andrei State, Fu-Che Wu, **Greg Welch**, Anselmo Lastra, and Henry Fuchs. A Projector-based Physical Sand Table for Tactical Planning and Review. Technical Report TR09-017, University *of* North Carolina *at* Chapel Hill, Department of Computer Science, 2009.

[12] Ramesh Raskar, Kok-Lim Low and **Greg Welch**. Shader Lamps: Animating Real Objects with Image-Based Illumination. Technical Report TR00-027, University *of* North Carolina *at* Chapel Hill, Department of Computer Science, 2000.

[11] Ruigang Yang and **Greg Welch**. Automatic Display Surface Estimation using Everyday Imagery. Technical Report TR00-015, University *of* North Carolina *at* Chapel Hill, Department of Computer Science, 2000.

[10] Ramesh Raskar, Henry Fuchs, **Greg Welch**, Adam Lake, and Matt Cutts. 3D Talking Heads: Image Based Modeling at Interactive Rates Using Structured Light Projection. Technical Report TR98-017, University *of* North Carolina *at* Chapel Hill, Department of Computer Science, 1998.

[9] **Greg Welch**. SCAAT: Incremental Tracking with Incomplete Information. Technical Report TR96-051, University *of* North Carolina *at* Chapel Hill, Department of Computer Science, 1996.

[8] **Greg Welch** and Gary Bishop. One-Step-at-a-Time Tracking. Technical Report TR96-021, University *of* North Carolina *at* Chapel Hill, Department of Computer Science, 1996.

[7] **Greg Welch**. Hybrid Self-tracker: An Inertial/Optical Hybrid Three-Dimensional Tracking System. Technical Report TR95-048, University *of* North Carolina *at* Chapel Hill, Department of Computer Science, 1995.

[6] **Greg Welch** and Gary Bishop. An Introduction to the Kalman Filter. Technical Report TR95-041, University *of* North Carolina *at* Chapel Hill, Department of Computer Science, 1995. **Cited over 11,200 times** according to Google as of 15 APR 2023. Translated into Chinese (modern and traditional) by others.

[5] **Greg Welch** VERSICOM: Versatile communications software. NASA Jet Propulsion Laboratory, July 13, 1989.

[4] **Greg Welch** and James P. Williams. The easy chair: A microprocessor-controlled wheelchair for children with muscular disorders. Purdue University, E.E.T. 490/491 Senior Design Project, Final Report, May 1986.

[3] **Greg Welch**. The infrared touch-pad. Purdue University, E.E.T. 421 Report, February 26, 1986.

[2] **Greg Welch** and James P. Williams. The easy chair: A microprocessor-controlled wheelchair for children with muscular disorders. Purdue University, E.E.T. 490/491 Senior Design Project, Preliminary Report, December 1985.

[1] James Williams and **Greg Welch**. The pressure sensitive touch-pad. Purdue University, E.E.T. 454 Project Report, April 30, 1985.

Ph.D. Dissertation

Title:	SCAAT: Incremental Tracking with Incomplete Information
Date:	October 1996
Advisor:	Gary Bishop
Committee:	Gary Bishop, Henry Fuchs, Leandra Vicci (née Vernon Chi), Anselmo Lastra, Russell Taylor, and John Poulton
PDF	`http://www.cs.unc.edu/~welch/media/pdf/scaat_dissertation.pdf`

Active Funding

- NSF Award# 2235066 for "Collaborative Research: CCRI: Grand: Virtual Experience Research Accelerator (VERA)," **Greg Welch** (Lead PI) and Gerd Bruder (PI) at the University of Central Florida; Shiri Azenkot (PI, NSF Award# 2235067) at Cornell Tech; Jeremy Bailenson at Stanford University (PI, NSF Award# 2235070); Tabitha Peck at Davidson College (PI, NSF Award# 2235068); and Valerie Jones Taylor at Lehigh University (PI, NSF Award# 2235069). NSF PO: Ephraim P. Glinert (IIS CHS), $4,900,000 total ($4,192,490 to UCF and $707,510 to collaborative partners) for April 2023–March 2027. `https://veraccel.org`
- Vision Products, Inc., Trust and Situational Awareness in Augmented Reality Soldier Training, SBIR-Phase II. PIs Greg Welch and Gerd Bruder. PM: Ted Harmer. $299,318. 2022?2023.
- ONR DURIP Award# N00014-21-1-2882 for "Testbed for Enhanced Perception and Cognition via Augmented Reality (EICAR)," **Greg Welch** (PI). Dr. Peter Squire, Program Manager. $177,484 for August 2021–May 2024.
- ONR Awards# N00014-21-1-2578 for "Enhanced Information Comprehension via Augmented Reality (EICAR)," **Greg Welch** (PI) and Gerd Bruder (Co-PI). Dr. Peter Squire, Program Manager. $1,290,291 total for June 2021–May 2024.
- NSF Award# 1800961 for "CHS: Medium: Collaborative Research: Augmented Reality Agents with Pervasive Awareness, Appearance, and Abilities," **Greg Welch** (PI), Gerd Bruder (Co-PI), and Damla Turgut (Co-PI) at UCF; Jeremy Bailenson (Co-PI) at Stanford University; and Benjamin Lok (Co-PI) at the University of Florida. NSF PO: Ephraim P. Glinert (IIS CHS), $674,264 for August 15 , 2018–July 31, 2023

Past Funding

- NSF Award# 1852002 for "REU Site: Research Experiences for Undergraduates Site on Internet of Things (IoT)," Damla Turgut (PI), Student Mentors: Damla Turgut, Ladislau Boloni, **Greg Welch**, Gerd Bruder, Samiul Hasan, Qun Zhou, Hyoung Jin Cho, and Andrew Dickerson at the University of Central Florida. NSF PO: Jonathan Sprinkle, $323,945 for May 1, 2019–April 30, 2023
- NSF Award# 1564065 for "CHS: Medium: Physical-Virtual Patient Bed for Healthcare Training and Assessment," **Greg Welch** (PI), Juan Cendan (Co-PI), and Laura Gonzalez (Co-PI), NSF PO: Ephraim P. Glinert (IIS CHS), $894,431 for August 1 , 2016–July 31, 2022
- Soar Technology, Inc., "Handoff Training for Combat Casualty Care (HTC3) CCHAT System PHASE II" **Greg Welch** (PI), Gerd Bruder (Co-PI), and Francisco Guido-Sanz (Co-PI). SoarTech PI: Alyssa Tanaka. $463,949 for June 15, 2019–April 30, 2022

- Florida High Tech Corridor Council (FHTCC), Handoff Training for Combat Casualty Care (HTC3), PIs: **Greg Welch** (PI), Gerd Bruder (Co-PI), and Francisco Guido-Sanz (Co-PI). SoarTech PI: Alyssa Tanaka. $248,928 for December 16, 2019–April 30, 2022.
- University of Central Florida, Exploratory Effort Aimed at a Center for Virtual and Augmented Reality for Healthcare, PIs **Greg Welch** and Carolina Cruz-Neira (CS), Co-PIs Mindi Anderson (CON), Gerd Bruder (IST), Juan Cendan (COM), Lisa Dieker (CCIE), Charlie Hughes (CS), and Ben Noel (FIEA). $40K for 2020–2021.
- ONR Award# N00014-18-1-2927 for "Enhanced Perception and Cognition in Augmented Reality (EPiC AR)," **Greg Welch** (PI) and Gerd Bruder (Co-PI). Dr. Peter Squire, Program Manager. $1,175,000 total for January 2018–December 2021.
- SA Photonics, Inc. "Blended Reality Solution for Live, Virtual, and Constructive Field Training PHASE II." **Greg Welch** (PI) and Gerd Bruder (Co-PI). SA Photonics PI: Michael Browne. $156,138.50 for December 21, 2018–May 22, 2021.
- Soar Technology, Inc., "Intelligent Diagnostic Trauma Algorithms for a Ruggedized Autonomous Combat Casualty Care Capability." Francisco Guido-Sanz (PI) and **Greg Welch** (Co-PI). SoarTech PI: Alyssa Tanaka. $7,500 for September 4, 2018–April 3, 2019
- Soar Technology, Inc., "Combat Casualty Care Augmented Reality Intelligent Training System - C3ARESYS Phase II," **Greg Welch** (PI), Gerd Bruder (Co-PI), and Francisco Guido-Sanz (Co-PI). SoarTech PI: Glenn Taylor. $145,900 for April 6, 2018–April 5, 2019.
- Florida High Tech Corridor Council, "FHTCC: Combat Casualty Care Augmented Reality Intelligent Training System (C3ARESYS)," **Greg Welch** (PI), Gerd Bruder (Co-PI). $49,760 for April 6, 2018–April 5, 2019.
- REU Grant (Award# 1560302) for "REU Site: Research Experiences in the Internet of Things," led by Damla Turgut (PI) and Yier Jin (Co-PI), **Greg Welch** (Investigator) et al. $359,912.00 for June 2016–May 2019
- ONR DURIP grant for "Transportable Human-Surrogate Interaction System (THuSIS)," **Greg Welch** (PI). Dr. Peter Squire, Program Manager. $148,216 for September 15, 2016–March 14, 2017.
- Lockheed Martin Corporation grant for "Improving Augmented Reality Technology," Joseph LaViola (PI), **Greg Welch** (Co-PI), and Malcolm Butler (Co-PI), $100,000, September 1, 2016–August 29, 2017.
- UCF Office of Research and Commercialization, Mentoring Program Award, "Fear of Falling in Older Adults," Ladda Thiamwong (PI) and **Greg Welch** (Mentor), $3,000, July 1, 2017–June 30, 2018.
- Soar Technology, Inc., "Handoffs for Joint Service Casualty Care (HJSCC)," Francisco Guido-Sanz (PI) and **Greg Welch** (Co-PI). SoarTech PI: Alyssa Tanaka. $59,763.00 for November 15, 2017–June 14, 2018.
- Soar Technology, Inc., "Handoff Training for Combat Casualty Care (HTC3)," **Greg Welch** (PI), Francisco Guido-Sanz (Co-PI), and Gerd Bruder (Co-PI). SoarTech PI: Alyssa Tanaka. $60,000.00 for December 17, 2017–July 17, 2018.
- SA Photonics, Inc., "Blended Reality Solution for Live, Virtual, and Constructive Field Training," **Greg Welch** (PI) and Gerd Bruder (Co-PI). SoarTech PI: Michael Browne. $31,000.00 for November 16, 2017–June 1, 2018.
- Soar Technology, Inc., "A16-076 Augmented/Mixed Reality for Force-on-Force Combat Casualty Care Training- Phase 1 Option," **Greg Welch** (PI). SoarTech PI: Glenn Taylor. $6,000.00 for November 27, 2017–March 26, 2018.
- ONR grant for "Human-Surrogate Interaction," **Greg Welch** (PI) at UCF; and Jeremy Bailenson at Stanford University. Dr. Peter Squire, Program Manager. $2,312,188 total for March 2014–December 2017.

- SoarTech/Department of the Army SBIR grant for "Combat Casualty Care Augmented Reality Intelligent Training System (C3ARESYS)," **Greg Welch** (UCF PI) and Frank Guido-Sanz (UCF), $18,000 + $6,000 option, July 1, 2016–December 31, 2016
- ONR DURIP grant for "A Testbed for Evaluating Human Surrogates for Live-Virtual Training," **Greg Welch** (PI) and Arjun Nagendran (Co-PI). Dr. Peter Squire, Program Manager. $178,437.
- ONR DURIP grant for "A Physical-Virtual Human-Robot Interaction System for Training, Education, and Rehabilitation," **Greg Welch** (PI), Charlie Hughes (Co-PI), and Arjun Nagendran (Investigator). Dr. Peter Squire, Program Manager. $268,598. July 2012–July 2014.
- ONR grant for "3D Display and Capture of Humans for Live-Virtual Training," led by **Greg Welch** (PI) and Charlie Hughes (Co-PI) at UCF, Jeremy Bailenson at Stanford University, and Mel Slater at the University of Barcelona. Dr. Peter Squire, Program Manager. $1,316,334 total for October 2011–September 2014.
- University of Central Florida, Major Research Equipment grant for "Comparative Evaluations of Display and Control Paradigms for Surrogate Humans," **Greg Welch** and Charlie Hughes, $57,500, February 2013–June 2013.
- University of Central Florida, Institute for Simulation & Training, Simulation for Healthcare Education and Learning Laboratory (SHELL) grant for "Simulating Subtle Clinical Changes and Realistic Conversation: Going Beyond Mannequins," Kelly Allred (PI), Patricia Weinstein, **Greg Welch**, Steve Talbert, Erica Hoyt, Karen J. Aroian, Anne E. Norris, Mary Lou Sole, Susan K. Chase. $125,000 in October 2012.
- DOE grant for "Advanced Kalman Filter for Real-Time Responsiveness in Complex Systems," led by **Greg Welch** (PI) at UNC and Zhenyu Huang (PI) at the Pacific Northwest National Laboratory. $320,502 total for September 2009–August 2013.
- ARA/DARPA contract for "ULTRA-Vis Phase 3: Sensor Fusion Methods/Software to Achieve Robust Pose Estimation," **Greg Welch** (PI). Alberico Menozzi, TPOC (ARA). $73,438 total for June 2012–June 2013.
- ONR grant for "3D Display and Capture of Humans for Live-Virtual Training," led by **Greg Welch** (lead PI) and Henry Fuchs (PI) at UNC, and Amela Sadagic (PI) at the Naval Postgraduate School. Roy Stripling and Clarke Lethin, Program Managers. $2.3M total for May 2009–September 2012. Welch led on the proposal and leads the subsequent research at UNC.
- NSF CRI:IAD grant for "Integrated Projector-Camera Modules for the Capture and Creation of Wide-Area Immersive Experiences," led by Henry Fuchs (PI), **Greg Welch** (Co-PI), Leonard McMillan (Co-PI), Mary Whitton (Co-PI), and Svetlana Lazebnik (Co-PI). $310K total for April 2008–March 2012. Welch led on the proposal at UNC.
- ONR contract for "Behavior Analysis and Synthesis for Intelligent Training (BASE-IT)," led by **Greg Welch** (PI) at UNC, Amela Sadagic (PI) at the Naval Postgraduate School, and Rakesh Kumar (PI) and Hui Cheng (Co-PI) at Sarnoff. Roy Stripling, Ph.D., Program Manager. $2.2M total for February 2008–September 2011. Welch led on the proposal and leads the subsequent research at UNC.
- ONR SBIR Phase II contract for "Deployable Intelligent Projection Systems for Training," led by Henry Fuchs (PI) and **Greg Welch** (PI), sub-contract from Renaissance Sciences Corporation (RSC), Jeff Clark, CEO, $374,920 for March 2009–February 2011. Welch led on the proposal and leads the subsequent research at UNC.
- UNC-Chapel Hill "Scholarship, Creative Activity or Research in the Humanities and Fine Arts" led by Francesca Talenti (PI) and **Greg Welch** (Co-PI), $10K for June 2009–May 2010.
- IARPA A-SpaceX contract for "Mockup Future Analyst Workspace (A-Desk)," led by **Greg Welch** (lead PI) and Henry Fuchs (PI). Jeff Morrison, Ph.D., Program Manager. $260K for April 2008–December 2008. Welch led the proposal and the subsequent research at UNC.

- ONR SBIR contract for "Deployable Intelligent Projection Systems for Training," led by **Greg Welch** (PI) at UNC and Karl Matias (PI) of Renaissance Sciences Corporation, sub-contract to UNC-Chapel Hill (Henry Fuchs, PI), $80K for Phase 1, June 2007–September 2008. Welch led on the proposal and led the subsequent research at UNC.
- IARPA VACE contract for "3D Content Extraction from Video Streams," led by Marc Pollefeys (PI) and **Greg Welch** (Co-PI), with Jan-Michael Frahm. Dan Aldridge, Program Manager. $660K October 2006–September 2008.
- Cisco Systems grant for "Telepresence Wall: Research Exhibit," with Henry Fuchs. $439K for August 2007–July 2008. Welch co-led the proposal and the subsequent research at UNC.
- ONR STTR contract for "Deployable Intelligent Projection Systems for Training: Enhanced Integrated Pose Estimation Technologies," led by **Greg Welch** (PI) at UNC and Karl Matias (PI) of Renaissance Sciences Corporation, sub-contract to UNC-Chapel Hill (Henry Fuchs, PI), $70K for Phase 1, August 2007–February 2008. Welch led on the proposal and led the subsequent research at UNC.
- Cisco Systems grant for "Prototype for Two-station, Four-Person, Proper Eye-Gaze Telepresence System," with Henry Fuchs. $376K total for August 2006–July 2007. Welch co-led on the proposal and co-led the subsequent research at UNC.
- National Library of Medicine contract for "3D Telepresence for Medical Consultation" led by **Greg Welch** (lead PI) and Prof. Henry Fuchs (PI) at UNC, Prof. Bruce Cairns, M.D. (Co-PI) at UNC, Prof. Ketan Mayer-Patel (Co-PI) at UNC, and Prof. Diane Sonnenwald (Co-PI) at Göteborg University and the University College of Borås. $2.5M total for October 2003–December 2007. Welch led on the proposal and led the subsequent research at UNC.
- ONR VIRTE contract for "Front-Projective Display For Virtual Environments: Phase 2," with Henry Fuchs and Herman Towles. Dylan Schmorrow, Ph.D. CDR MSC USN, Program Manager. $560K total for October 2004–December 2007.
- Office of Naval Research DURIP 2006 grant for "Computing for Real World Acquisition, Display and Immersive Training," with Henry Fuchs and Marc Pollefeys. $136K total.
- DARPA DSO contract for "Wide Area Visuals for a Simulator in a Box," with Henry Fuchs and Herman Towles. Ralph Chatham, DARWARS Program Manager. $1.2M total for 2003–2006.
- NSF ITR grant "Electronic Books for the Tele-Immersion Age: A New Paradigm for Teaching Surgical Procedures," led by **Greg Welch** (PI) at UNC and Andy van Dam (PI) at Brown University, $609K (UNC) for Sep 2001–Aug 2005. Welch led on the proposal and led the subsequent research at UNC.
- DOE contract "Front-Projection Display Wall, Group Tele-Immersion, and Tracking," with Henry Fuchs and Herman Towles, $1.8M for September 2001–August 2004.
- "3D Tele-Immersion Over Next Generation Internet," UNC/UPenn DARPA contract with Henry Fuchs, Herman Towles, Kostas Danillidis, and Ruzena Bajcsy, $550K (UNC) for June 2001–December 2002.
- Argonne National Laboratories contract "Compensating for Color Variations Across Multi-Projector Displays," $61K for September 2001–August 2002. Led by **Greg Welch** (PI).
- NSF grant "High-Fidelity Tele-Immersion for Advanced Surgical Training," UNC/UPenn/Brown, with Henry Fuchs, Kostas Danillidis, and Andy van Dam, $750K (UNC) for January 2001–December 2001.
- Naval Research Lab contract "Technology for Full-Body Tracking," with Gary Bishop. Larry Rosenblum, NRL program manager. $100,271 over October 2000–September 2001.
- NSF Research Infrastructure grant for the NSF Graphics and Visualization Science and Technology Center. The entire Center participated in the proposal process, **Greg Welch** played a significant role in the proposal content/realization. This grant supported equipment for

Center-wide televideo and several related research projects. Support under this grant totaled $1.3M for the Center over October 1998–September 2001. The UNC portion was $304K.

- "The National Tele-Immersion Initiative," with Henry Fuchs. Gift from Advanced Network and Services, Inc., Al Weiss, Terry Rogers, and Jaron Lanier. $750K per year over January 1998–December 2000.
- NSF Graphics and Visualization Science and Technology Center, 5-year Renewal. The entire Center participated in the renewal proposal process, including a major site visit at the University of Utah, summer 1997. In addition to contributing to the written proposal, **Greg Welch** played a significant role in the Utah site visit. Total Center support under this renewal totals approximately $13.7M for the entire Center for the final four years (February 1998–January 2002). The UNC portion totaled approximately $2.7M over those four years.
- DARPA contract "Geospatially Registered Information for Dismounted Infantry" (GRIDS), with Gary Bishop and Vernon Chi. Joint effort with Raytheon Defense Systems, Hughes Research Labs, UNC, and the University of Southern California. Total support over two years (May 1997–April 1999) was approximately $3.1M, UNC portion was approximately $1.2M.

Activities as a Student

- President, UNC-Chapel Hill Computer Science Student Association, 1994–1995
- Graduated with *Highest Distinction* from Purdue University (among three-tenths of the baccalaureate graduates having the highest graduation indexes)
- *Outstanding Senior Design Project*, "The Easy Chair: A Microprocessor-Controlled Wheelchair for Children With Muscular Disorders," E.T., Purdue University, 1986
- *Distinguished Student*, Purdue University, 1982–1986 (all semesters)
- Residence Hall Counselor, Purdue University, 1985–1986
- Tau Alpha Pi National Honor Society, Pi Alpha Chapter, 1986
- Golden Key National Honor Society, 1984
- Phi Eta Sigma National Honor Society, 1983

Professional Experience (More Detail)

University *of* Central Florida, Orlando, Florida
AdventHealth Endowed Chair in Healthcare Simulation, October 2013–present
Professor, College of Nursing, October 2013–present
Professor, Computer Science Division of CECS, November 2013–present
Professor, Institute for Simulation & Training, November 2013–present
Co-Director, IST Synthetic Reality Lab (SREAL), August 2011–present
Co-Director, Interactive Computing Experiences Research Cluster of Excellence (2014–2017)
Research Professor, Institute for Simulation & Training (IST), August 2011–October 2013
Research Professor, Department of Computer Science, CECS, October 2011–October 2013

University *of* North Carolina *at* Chapel Hill, Chapel Hill, North Carolina
Adjunct Research Professor, Computer Science, September 2012–September 2020
Research Professor, Computer Science, July 2010–August 2012
Research Associate Professor, Computer Science, September 2001–June 2010
Adjunct Associate Professor, Applied & Materials Sciences, 2005–2008
Adjunct Assistant Professor, Applied & Materials Sciences, 2000–2003
Research Assistant Professor, Computer Science, September 1996–August 2001
UNC Site Coordinator, NSF Graphics and Visualization STC, September 1996–August 1998

- Coordinate UNC research for the National Science Foundation's Science and Technology Center for Graphics and Visualization.
- STC members included Brown University (PI Andy van Dam, Co-PI John Hughes), The California Institute of Technology (PI Al Barr), Cornell University (PI Don Greenberg), The University of Utah (PI Rich Riesenfeld, Co-PI Elaine Cohen), and UNC (PI Henry Fuchs).
- Primary goals of the STC, which existed from 1991–2002, included build a stronger scientific foundation for computer graphics and scientific visualization, and to helping create a basic framework for future interactive graphical environments.

University College Dublin (2011–2016)
Visiting Professor, School of Information and Library Studies

Keio University (2010–2012)
Visiting Professor, Graduate School of Media Design

Renaissance Sciences Corporation, Chandler, Arizona
Principal Investigator II, June 2007–2008

- Part-time research and development efforts related to "intelligent projector units" for deployable training systems.
- Work with Jeff Clark and Karl Mathias at RSC to coordinate UNC-RSC joint efforts.

Northrop Defense Systems Division, Rolling Meadows, Illinois
Senior Software Engineer, Digital Systems, June 1990–June 1992 (Secret Clearance)

- Developed, integrated, and maintained embedded software for the AN/ALQ-135, the electronic (radar) countermeasures system currently deployed on the USAF F-15 Eagle.
- Responsible for the AN/ALQ-135 Receiver-Transmitter Compatibility Feature which ensures that radar countermeasures do not interfere with radar or threat acquisitions.

NASA Jet Propulsion Laboratory (Caltech), Pasadena, California
CCS/COMSIM Programmer and Analyst, Voyager Sequence Team, January 1987–May 1990

- Enhanced and maintained the software Command Simulator for the Voyager spacecraft. This simulator is (still) used to validate all instructions sent to the spacecraft.
- Programmed and maintained the Voyager spacecraft Computer Command Subsystem (CCS), the master processor on both Voyager spacecraft.
- Simulated and validated Voyager spacecraft command sequence activity. Responsible for the simulation and validation of all sequenced commanding during Voyager II closest approach to the planet Neptune.

Significant Projects (developed under own initiative)

- Developed MEMMAN, a ground-based software system that optimizes the allocation of the limited Voyager spacecraft memory. Savings during the Voyager II Neptune encounter (August, 1989) enabled additional planetary imaging.
- Developed specialized IBM PC/AT telecommunications software for the Voyager Flight Team. Software submitted to NASA for distribution under COSMIC. Still used today.

Purdue University, West Lafayette, Indiana
Undergraduate, Electrical Engineering Technology, August 1982–May 1986

- Co-developed "The Easy Chair: A Microprocessor-Controlled Wheelchair for Children With Muscular Disorders." The wheelchair included an ultrasonic "bumper" system, a custom infrared touchpad, motor controllers, and a user-programmable 8085-based control unit.
- The Easy Chair project was awarded *Outstanding Senior Design Project* by the Purdue University Department of Electrical Engineering Technology, May 1986.
- Residence Hall Counselor (Resident Assistant) at Cary Quadrangle, August 1985–May 1986.