US 20020149561A1

(19) United States

(12) Patent Application Publication

(10) Pub. No.: US 2002/0149561 A1

(43) Pub. Date: Oct. 17, 2002

Fukumoto et al.

(54) ELECTRONIC APPARATUS VIBRATION GENERATOR, VIBRATORY INFORMING METHOD AND METHOD FOR CONTROLLING INFORMATION

(76) Inventors: **Masaaki Fukumoto**, Yokohama-shi (JP); **Toshiaka Sugimura**, Yokohama-shi (JP)

Correspondence Address:
BRINKS HOFER GILSON & LIONE
P.O. BOX 10395
CHICAGO, IL 60610 (US)

(21) Appl. No.: **10/110,002**

(22) PCT Filed: **Aug. 3, 2001**

(86) PCT No.: **PCT/JP01/06680**

(30) **Foreign Application Priority Data**

Aug. 8, 2000 (JP) 2000-240473
Jul. 27, 2001 (JP) 2001-228390

Publication Classification

(51) Int. Cl.[7] G09G 5/00
(52) U.S. Cl. 345/156

(57) **ABSTRACT**

An electronic device drives an oscillatory actuator to cause generation of vibration when it is detected that an operation input to a touch panel or operation key has been received. The electronic device causes, by this vibration, the touch panel and operation key to vibrate in a direction perpendicular to their respective front surfaces. Alternatively, the housing of the electronic device is made to vibrate. Further, the oscillatory actuator has a weight, a support member for supporting the weight to allow it to reciprocate, and connected to the touch panel or housing or other vibratory member of the electronic device, or vibratory member of the base member of the oscillatory actuator in contact with the vibratory member, and a mechanism for imparting a magnetic force or electrostatic force to cause reciprocal movement of the weight.

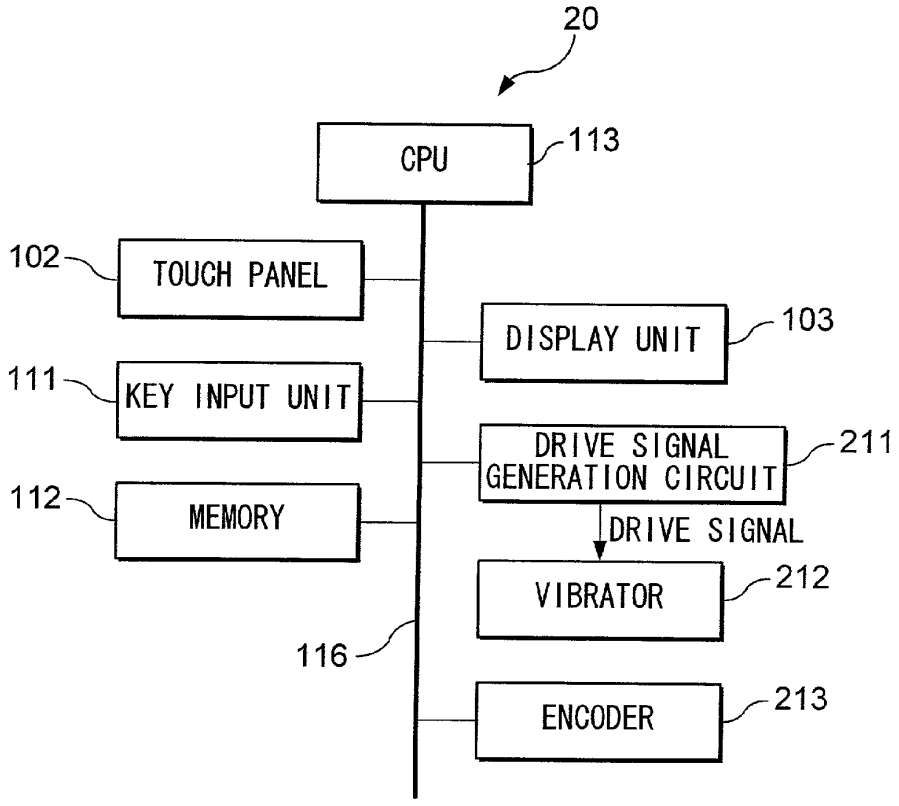

FIG. 1

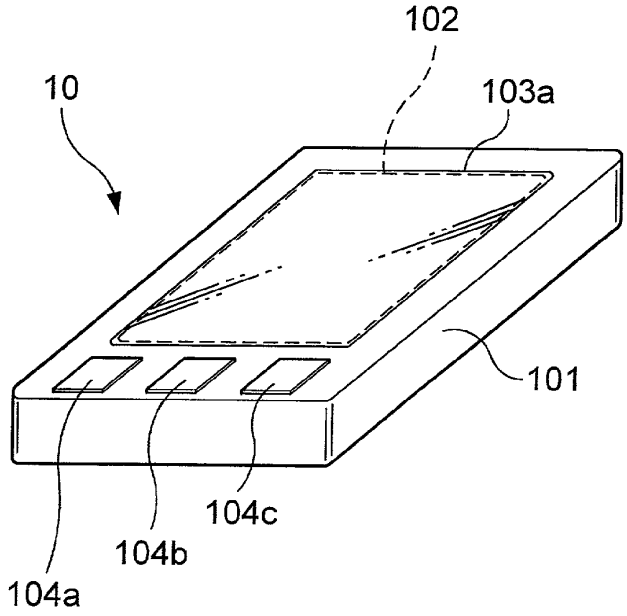
102
10
103a
101
104c
104b
104a

FIG. 2

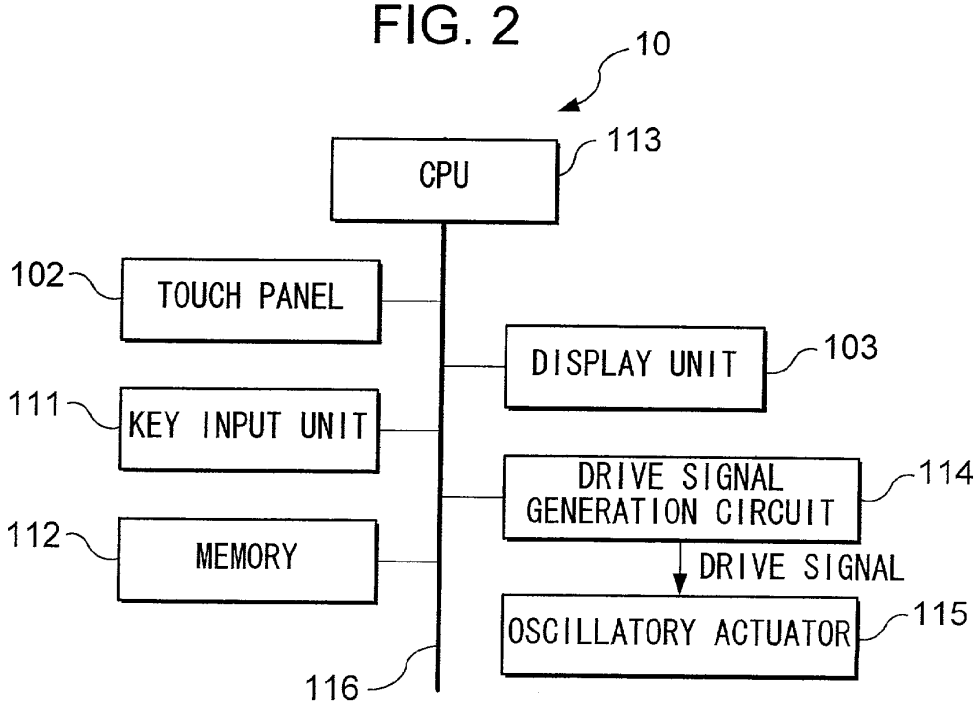
10
CPU
113
102
TOUCH PANEL
DISPLAY UNIT
103
111
KEY INPUT UNIT
DRIVE SIGNAL GENERATION CIRCUIT
114
112
MEMORY
DRIVE SIGNAL
OSCILLATORY ACTUATOR
115
116

FIG. 3

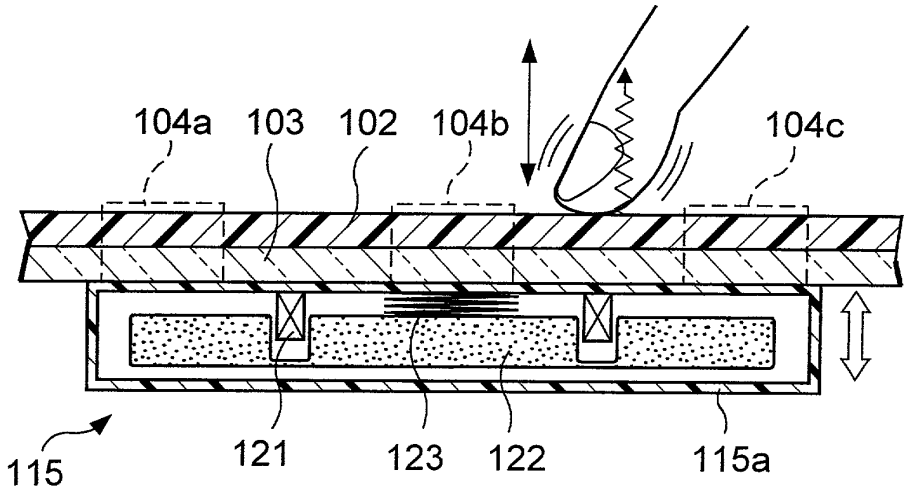

FIG. 4

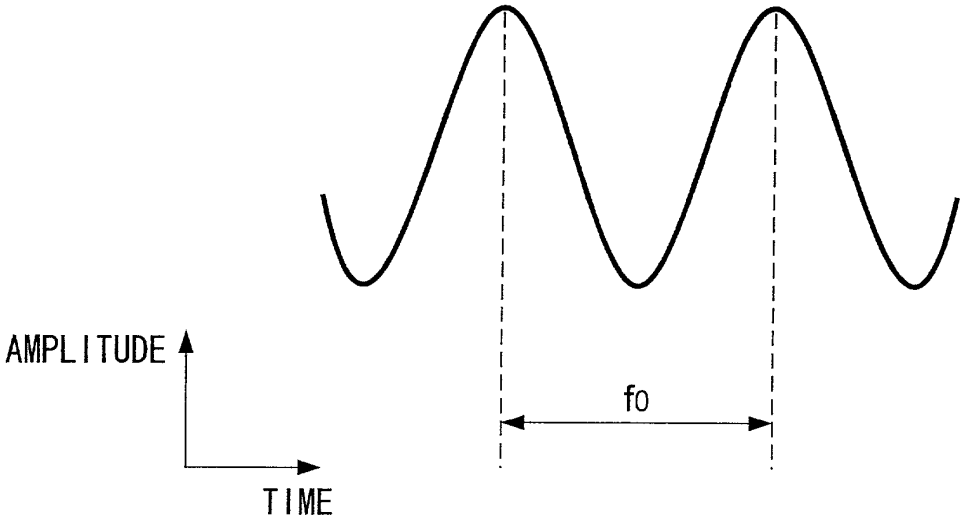

FIG. 5

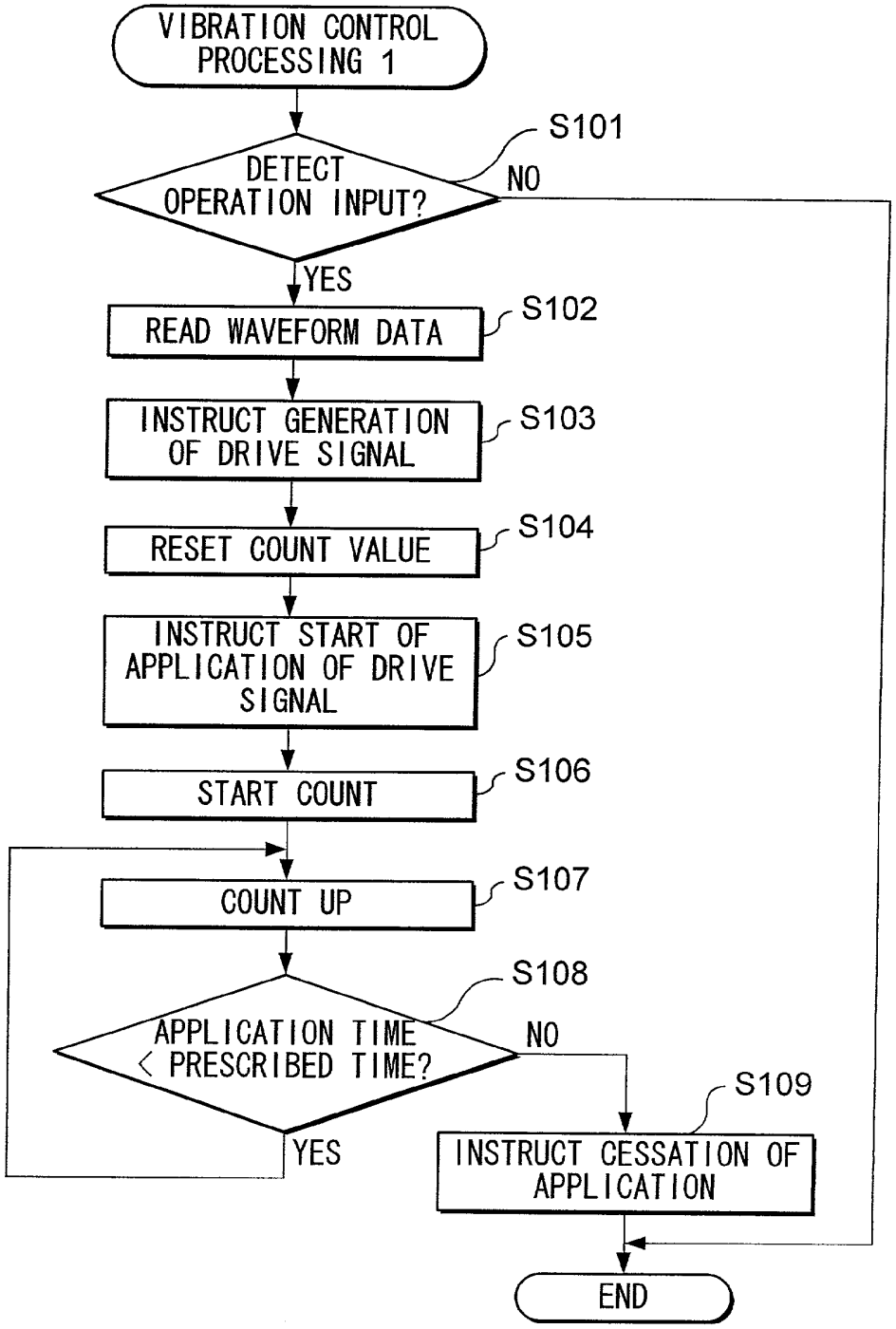
VIBRATION CONTROL PROCESSING 1
S101
DETECT OPERATION INPUT?
NO
YES
S102
READ WAVEFORM DATA
S103
INSTRUCT GENERATION OF DRIVE SIGNAL
S104
RESET COUNT VALUE
S105
INSTRUCT START OF APPLICATION OF DRIVE SIGNAL
S106
START COUNT
S107
COUNT UP
S108
APPLICATION TIME < PRESCRIBED TIME?
NO
YES
S109
INSTRUCT CESSATION OF APPLICATION
END

FIG. 6

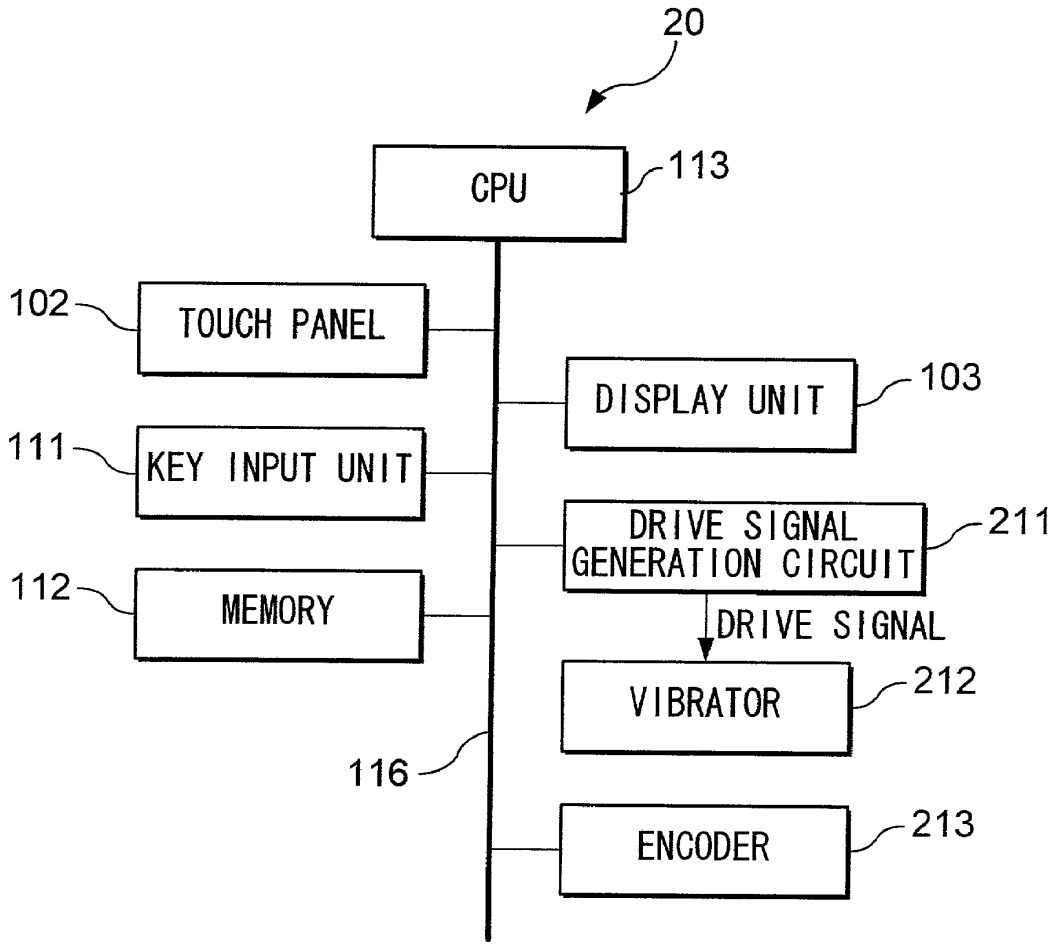
20
CPU
113
102
TOUCH PANEL
DISPLAY UNIT
103
111
KEY INPUT UNIT
DRIVE SIGNAL GENERATION CIRCUIT
211
112
MEMORY
DRIVE SIGNAL
VIBRATOR
212
116
ENCODER
213

FIG. 7

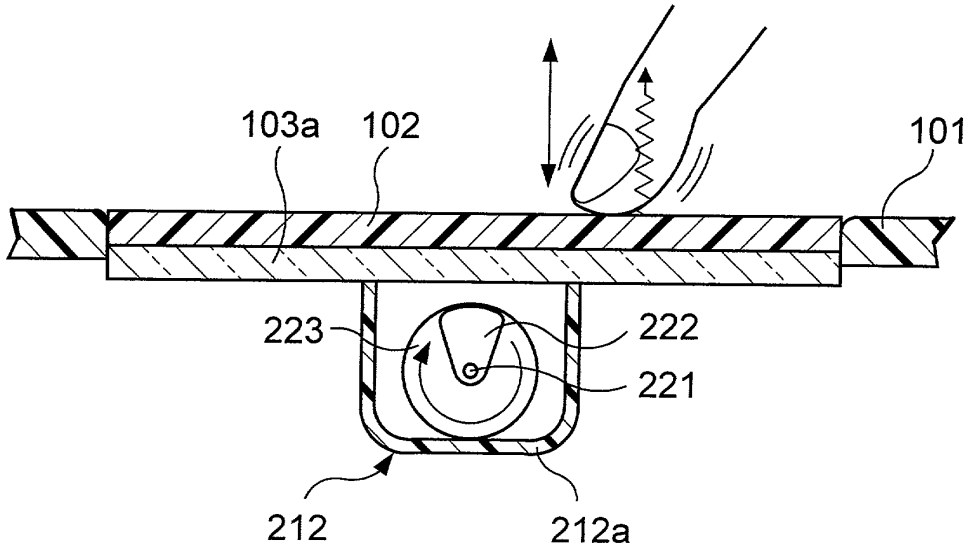

FIG. 8

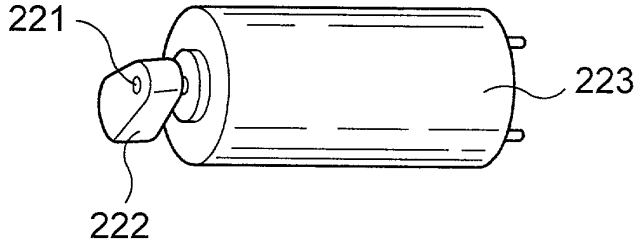

FIG. 9

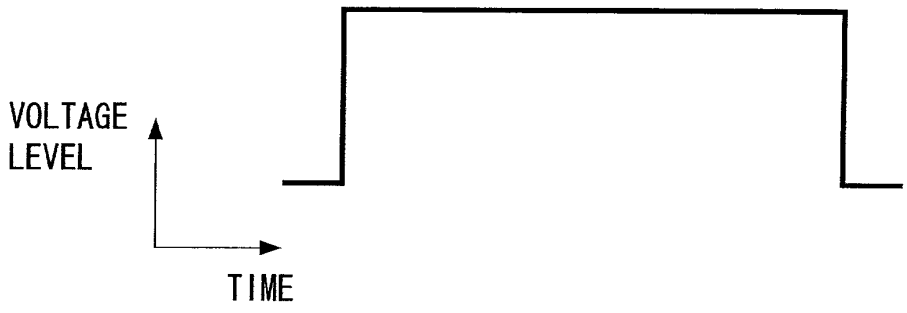

FIG. 10

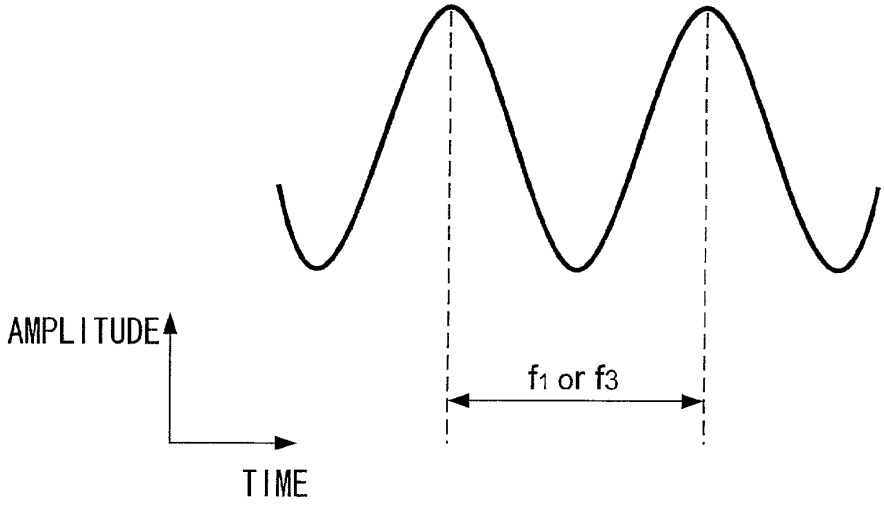

FIG. 11

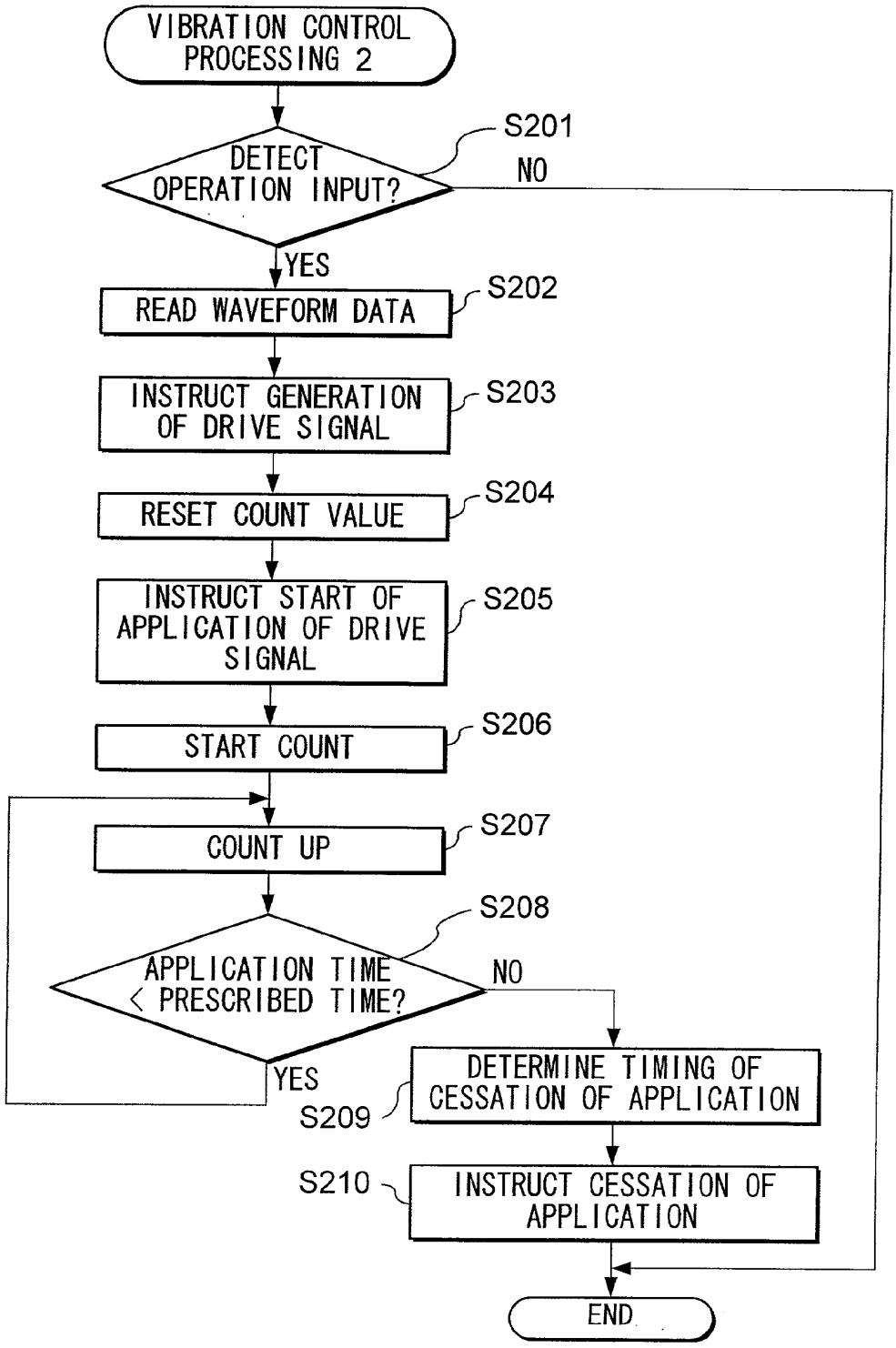
VIBRATION CONTROL PROCESSING 2
DETECT OPERATION INPUT?
S201
NO
YES
READ WAVEFORM DATA
S202
INSTRUCT GENERATION OF DRIVE SIGNAL
S203
RESET COUNT VALUE
S204
INSTRUCT START OF APPLICATION OF DRIVE SIGNAL
S205
START COUNT
S206
COUNT UP
S207
S208
APPLICATION TIME < PRESCRIBED TIME?
NO
YES
DETERMINE TIMING OF CESSATION OF APPLICATION
S209
S210
INSTRUCT CESSATION OF APPLICATION
END

FIG. 12

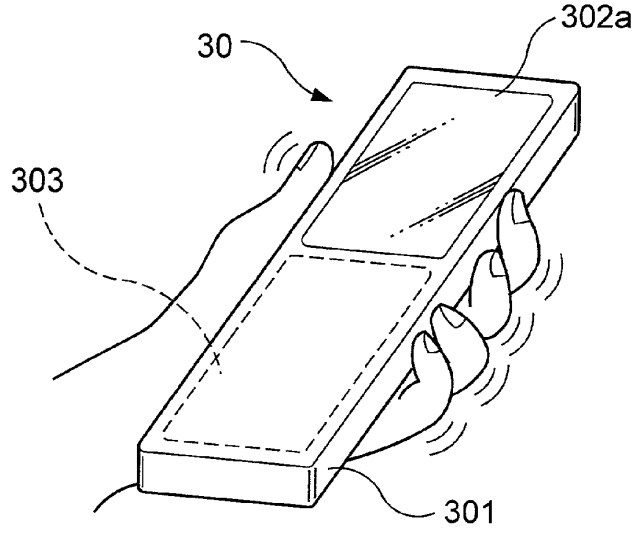
30
302a
303
301

FIG. 13

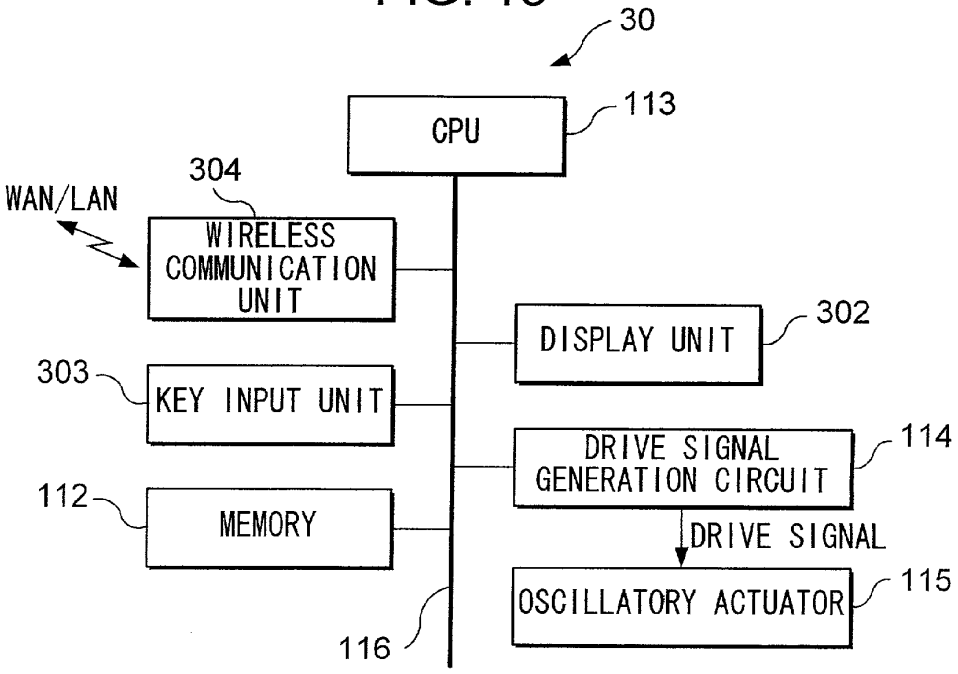
30
CPU
113
WAN/LAN
304
WIRELESS COMMUNICATION UNIT
DISPLAY UNIT
302
303
KEY INPUT UNIT
DRIVE SIGNAL GENERATION CIRCUIT
114
112
MEMORY
DRIVE SIGNAL
OSCILLATORY ACTUATOR
115
116

FIG. 14

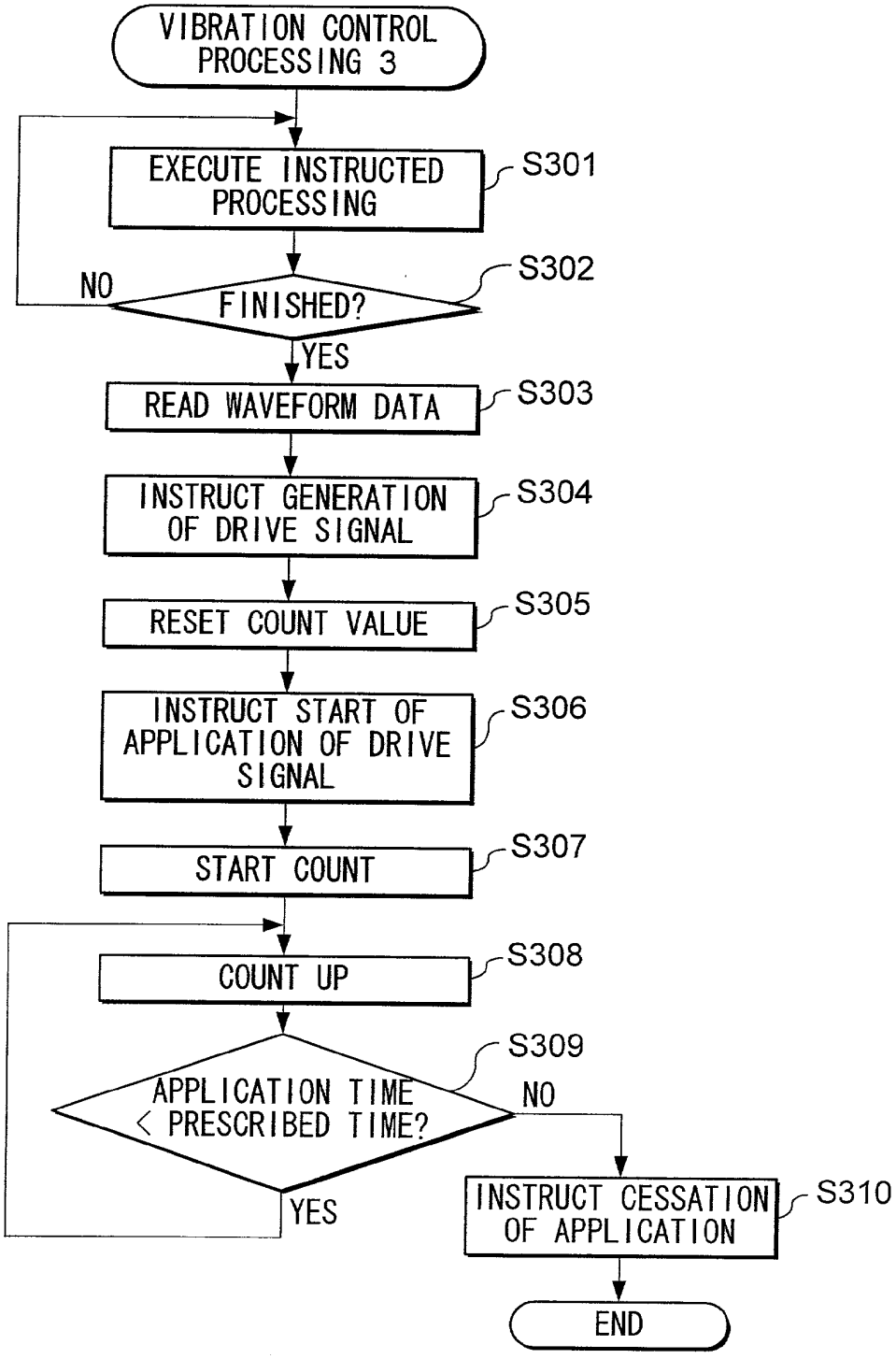
VIBRATION CONTROL PROCESSING 3
EXECUTE INSTRUCTED PROCESSING
S301
FINISHED?
S302
NO
YES
READ WAVEFORM DATA
S303
INSTRUCT GENERATION OF DRIVE SIGNAL
S304
RESET COUNT VALUE
S305
INSTRUCT START OF APPLICATION OF DRIVE SIGNAL
S306
START COUNT
S307
COUNT UP
S308
APPLICATION TIME < PRESCRIBED TIME?
S309
NO
YES
INSTRUCT CESSATION OF APPLICATION
S310
END

FIG. 15

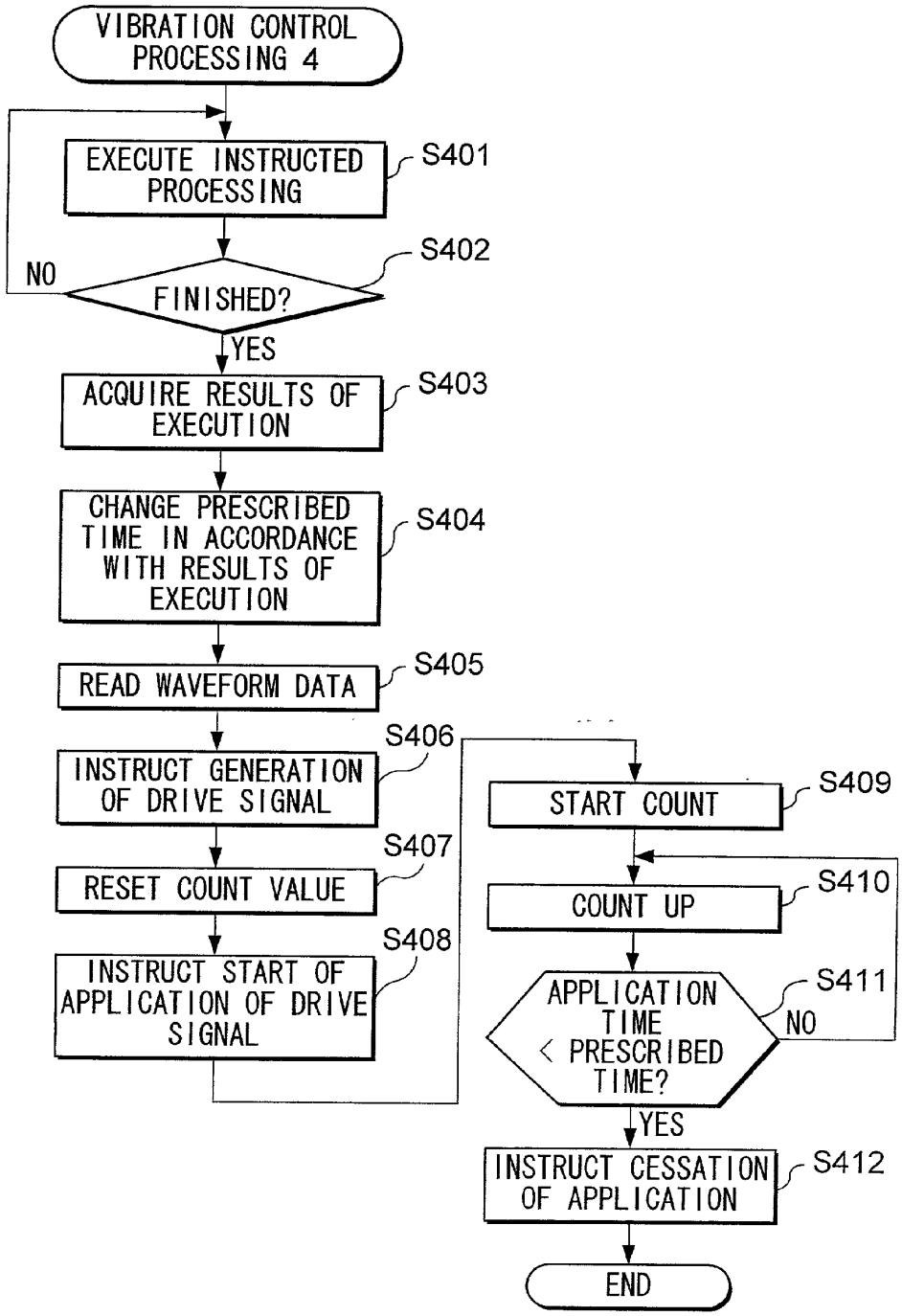
VIBRATION CONTROL PROCESSING 4
EXECUTE INSTRUCTED PROCESSING
S401
FINISHED?
S402
NO
YES
ACQUIRE RESULTS OF EXECUTION
S403
CHANGE PRESCRIBED TIME IN ACCORDANCE WITH RESULTS OF EXECUTION
S404
READ WAVEFORM DATA
S405
INSTRUCT GENERATION OF DRIVE SIGNAL
S406
RESET COUNT VALUE
S407
INSTRUCT START OF APPLICATION OF DRIVE SIGNAL
S408
START COUNT
S409
COUNT UP
S410
APPLICATION TIME < PRESCRIBED TIME?
S411
NO
YES
INSTRUCT CESSATION OF APPLICATION
S412
END

FIG. 16

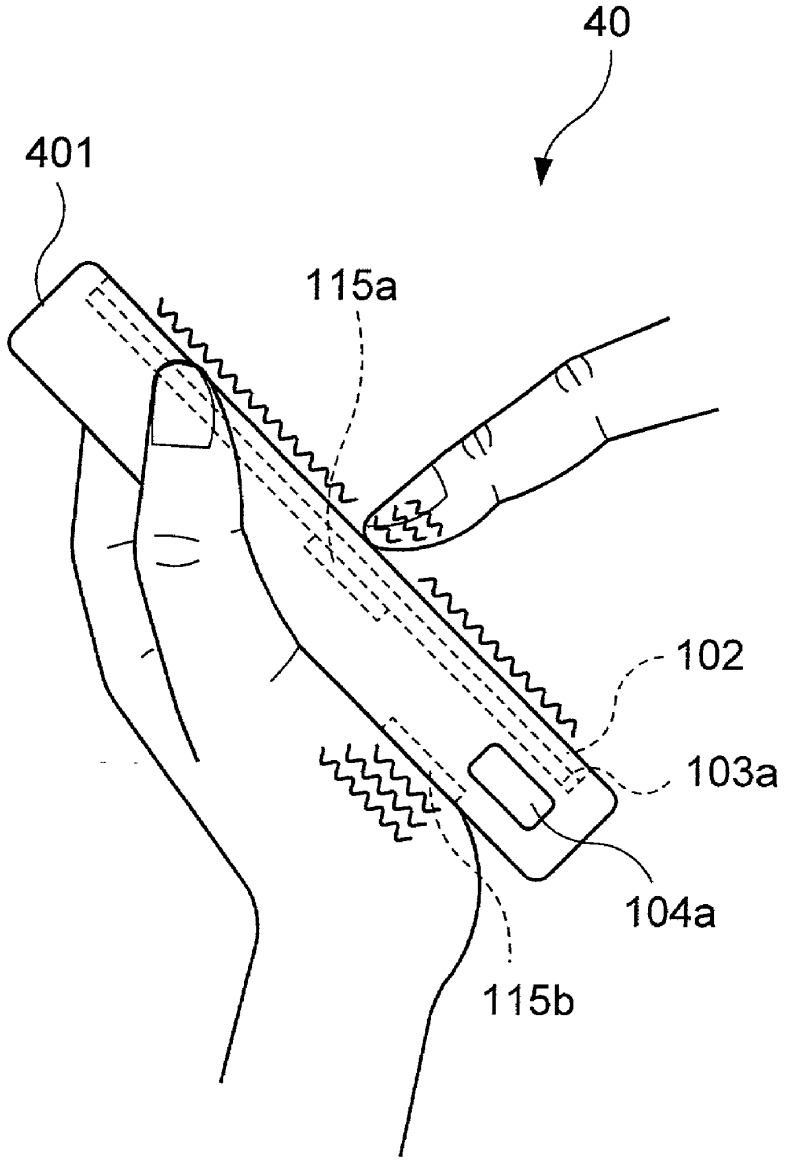

FIG. 17

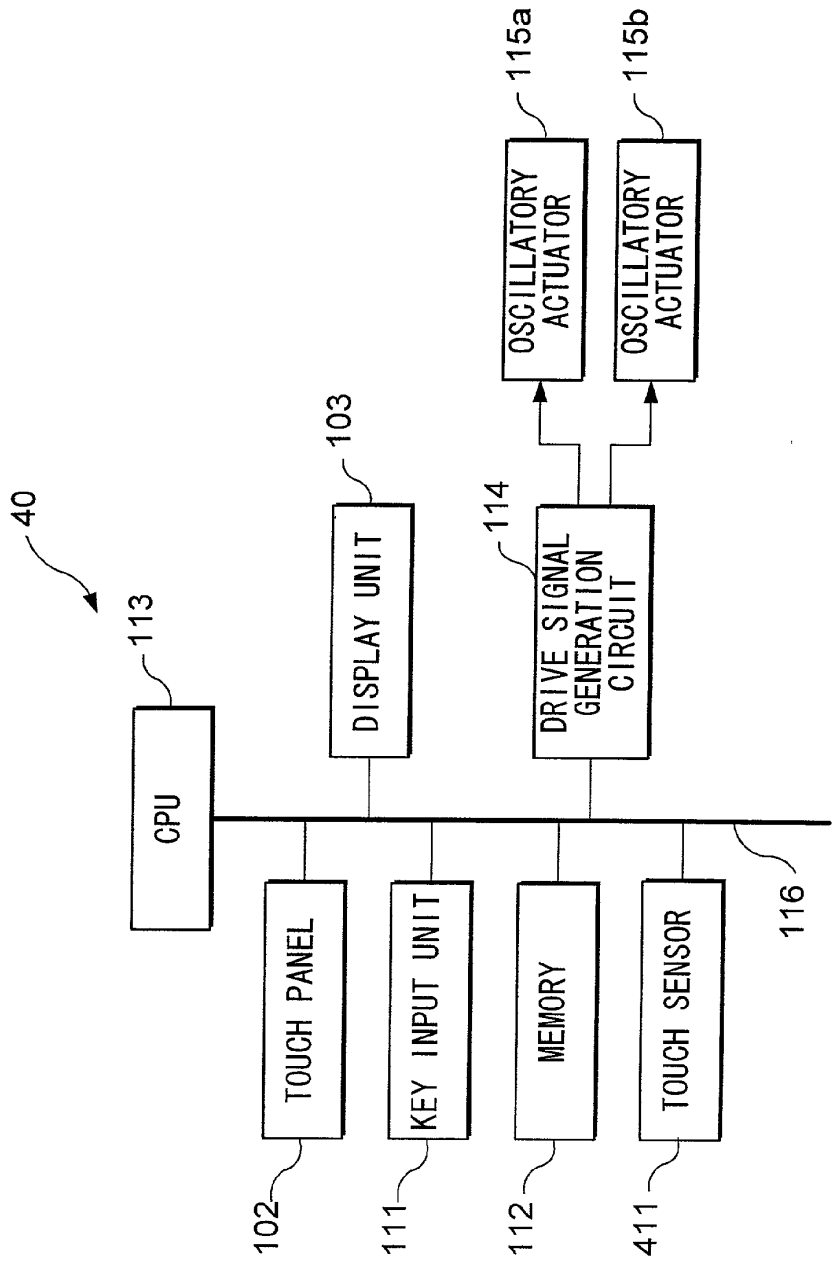
40
113
CPU
103
DISPLAY UNIT
114
DRIVE SIGNAL GENERATION CIRCUIT
115a
OSCILLATORY ACTUATOR
115b
OSCILLATORY ACTUATOR
116
102
TOUCH PANEL
111
KEY INPUT UNIT
112
MEMORY
411
TOUCH SENSOR

FIG. 18

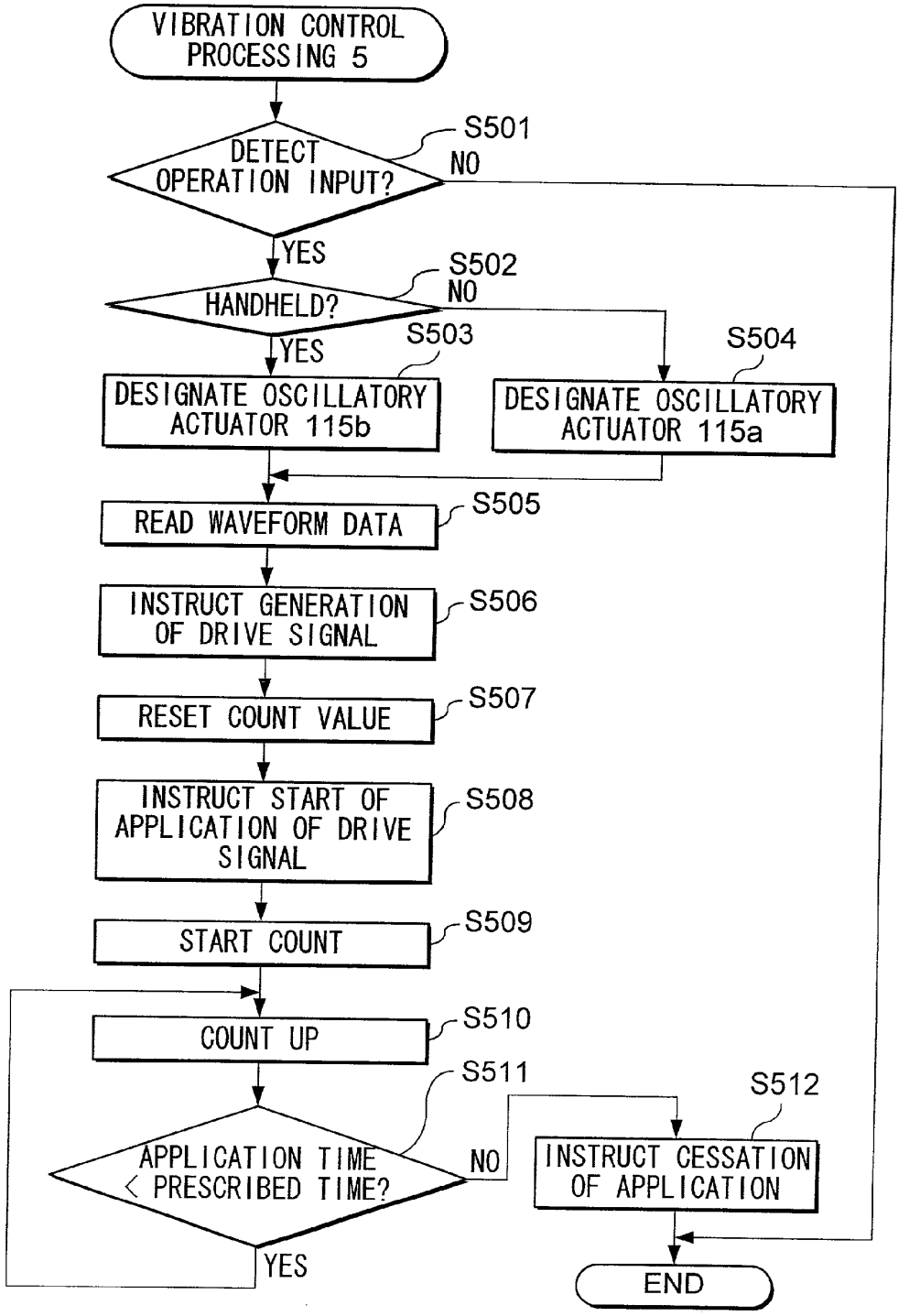
VIBRATION CONTROL PROCESSING 5
DETECT OPERATION INPUT?
S501
NO
YES
HANDHELD?
S502
NO
YES
S503
S504
DESIGNATE OSCILLATORY ACTUATOR 115b
DESIGNATE OSCILLATORY ACTUATOR 115a
READ WAVEFORM DATA
S505
INSTRUCT GENERATION OF DRIVE SIGNAL
S506
RESET COUNT VALUE
S507
INSTRUCT START OF APPLICATION OF DRIVE SIGNAL
S508
START COUNT
S509
COUNT UP
S510
S511
S512
APPLICATION TIME < PRESCRIBED TIME?
NO
INSTRUCT CESSATION OF APPLICATION
YES
END

FIG. 19

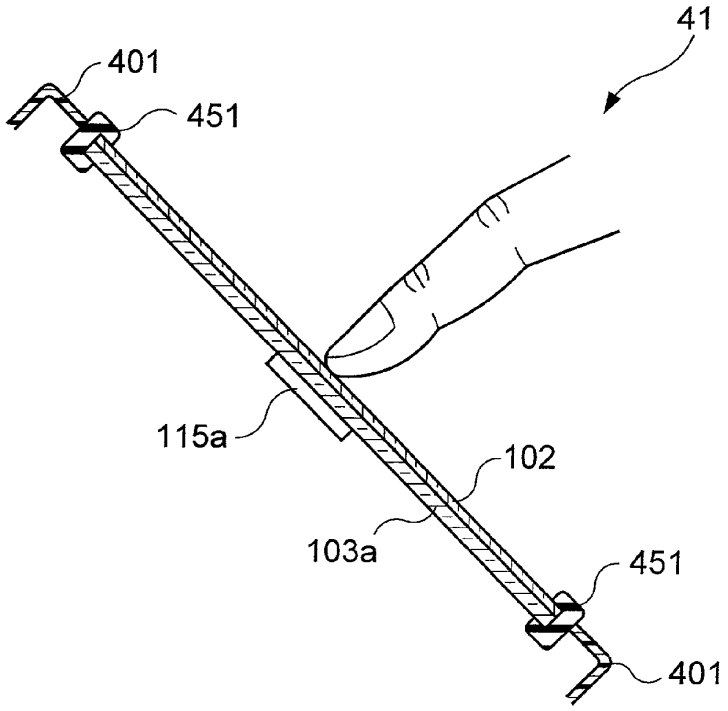

FIG. 20

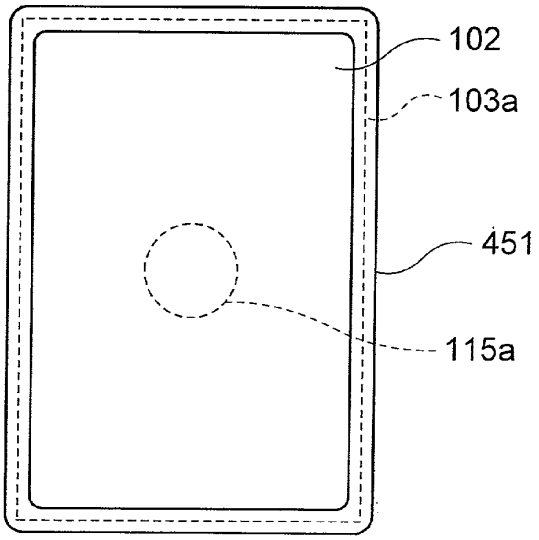

FIG. 21

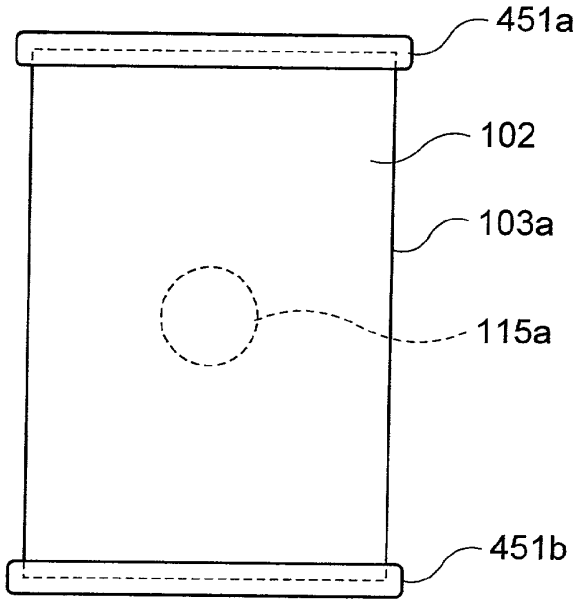

FIG. 22

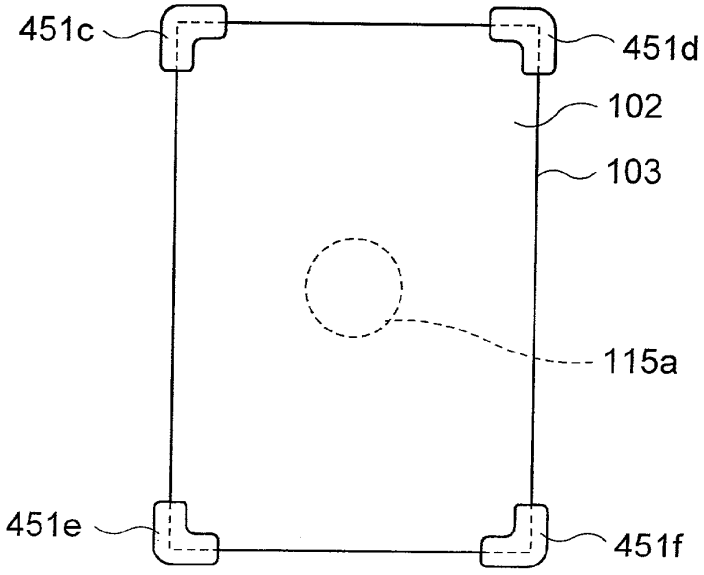

FIG. 23

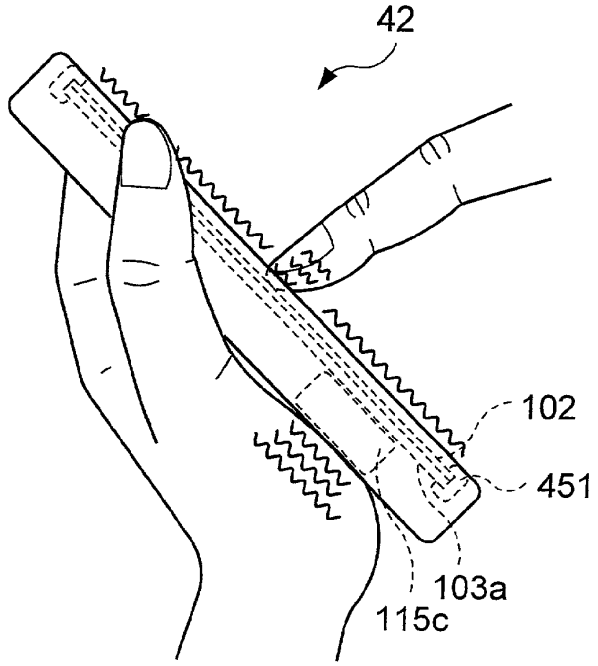

FIG. 24

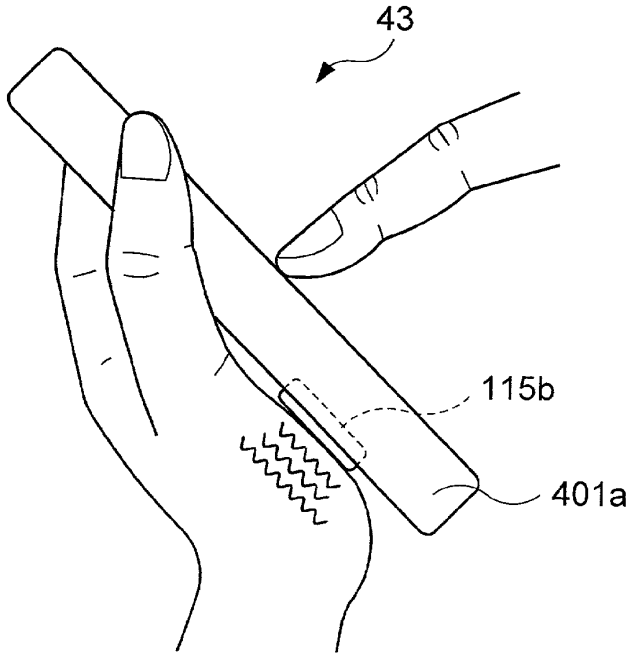

FIG. 25

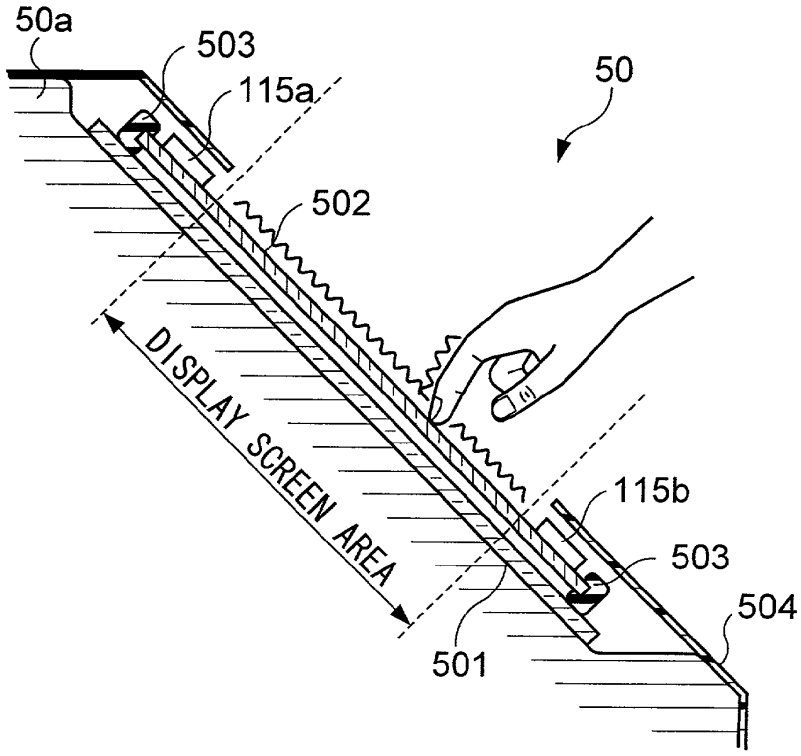
50a
503
115a
50
502
DISPLAY SCREEN AREA
115b
503
504
501

FIG. 26

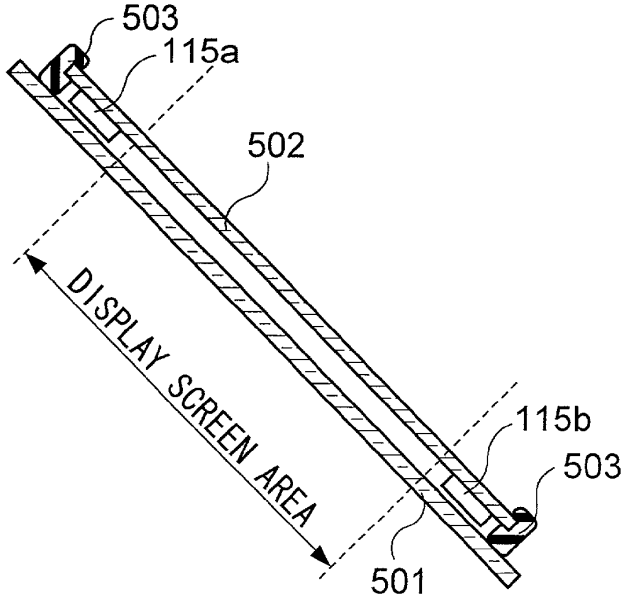
503
115a
502
DISPLAY SCREEN AREA
115b
503
501

FIG. 27

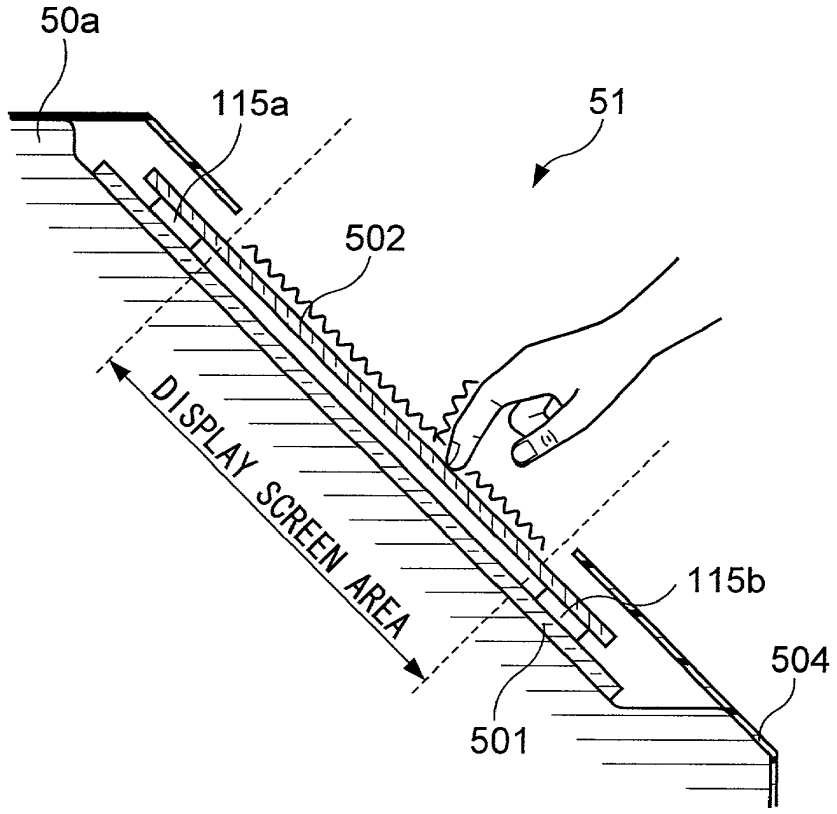

FIG. 28

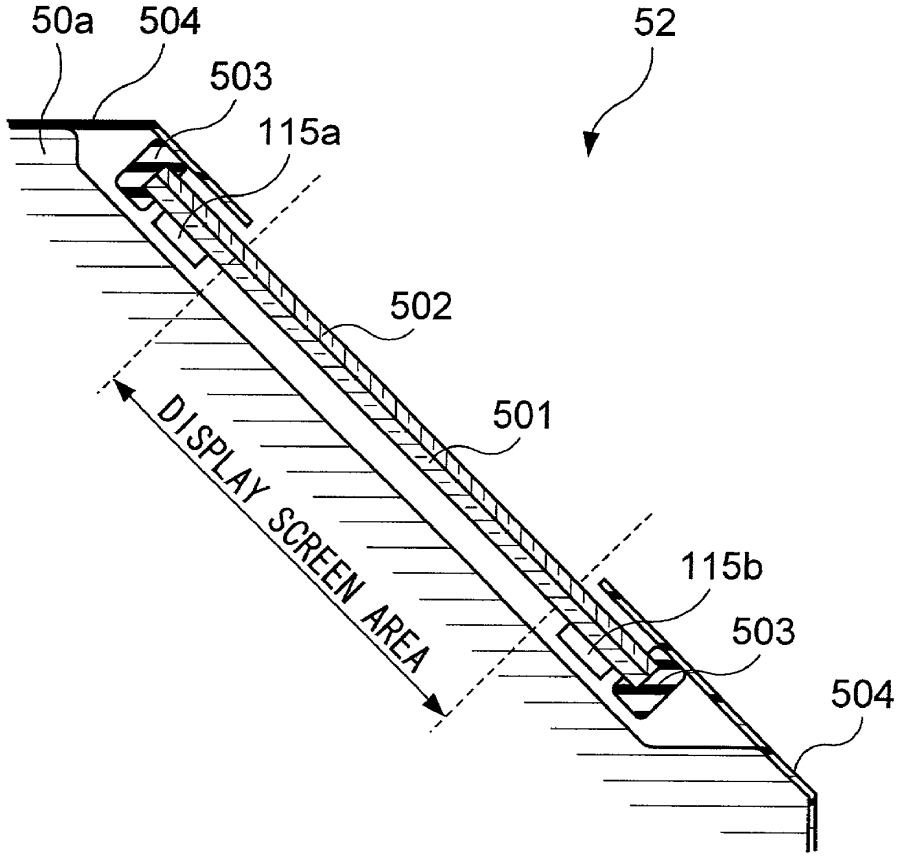

FIG. 29

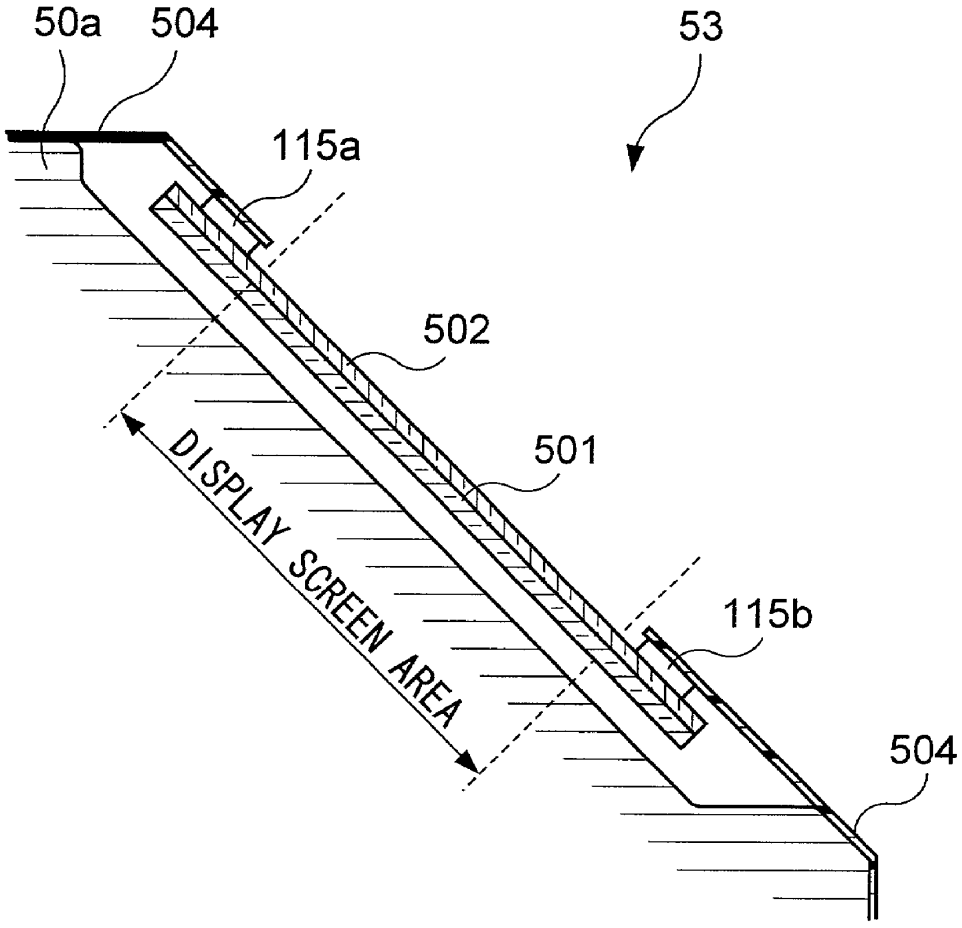

FIG. 30

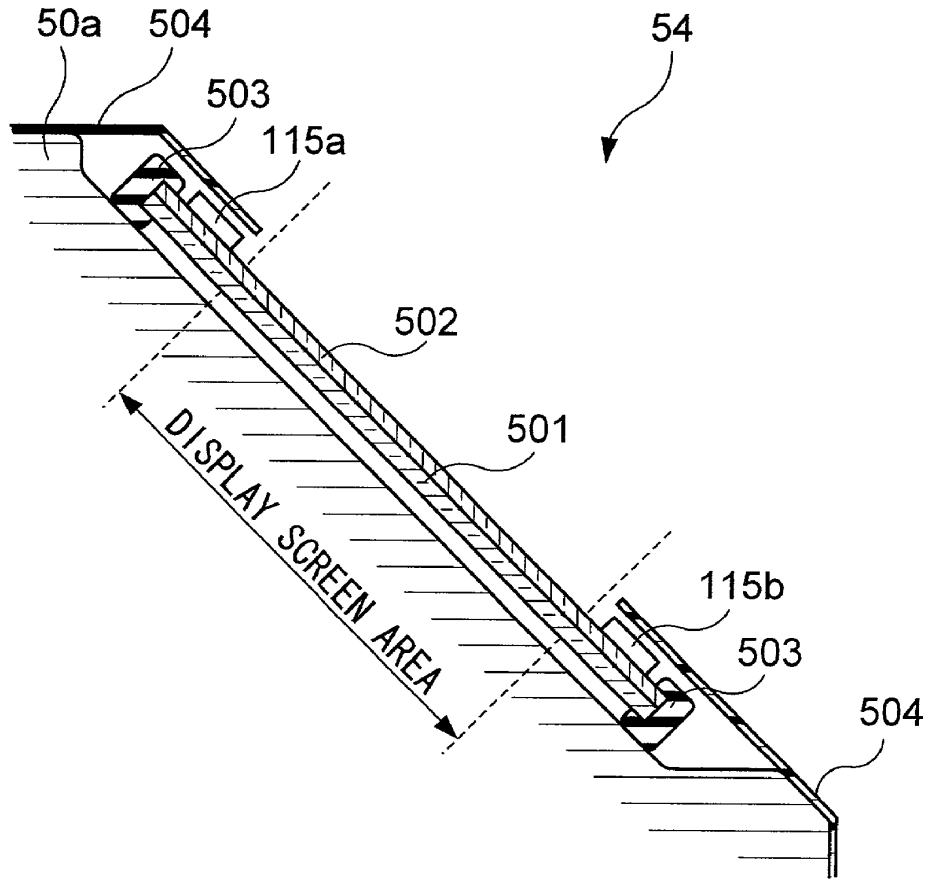

FIG. 31

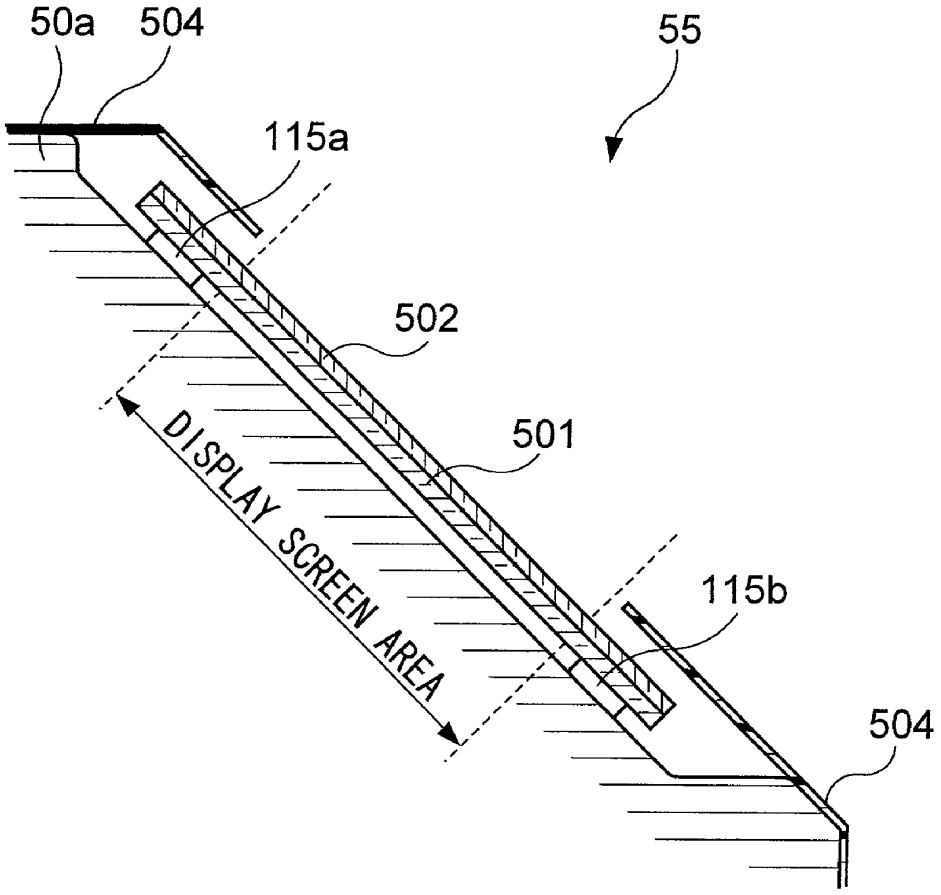

FIG. 32

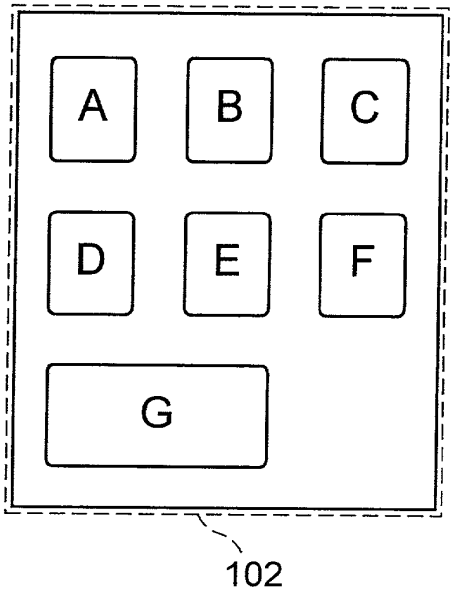

FIG. 33

112a

TOUCH BUTTON	AREA DATA	WAVEFORM DATA
A		
B		
C		
⋮	⋮	⋮

FIG. 34

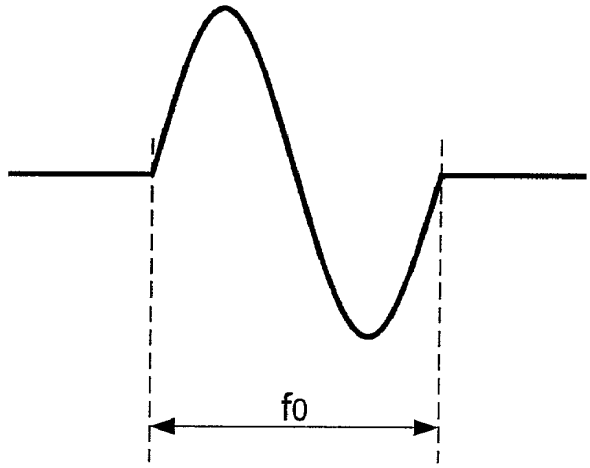

FIG. 35

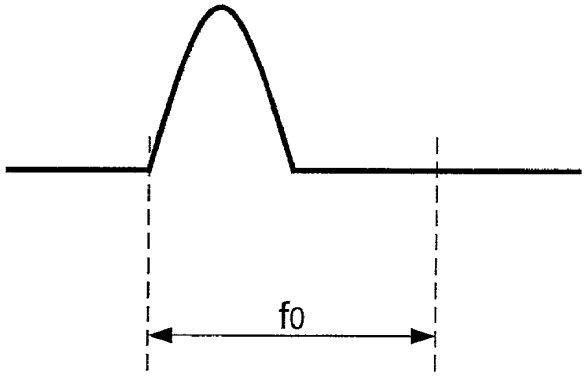

FIG. 36

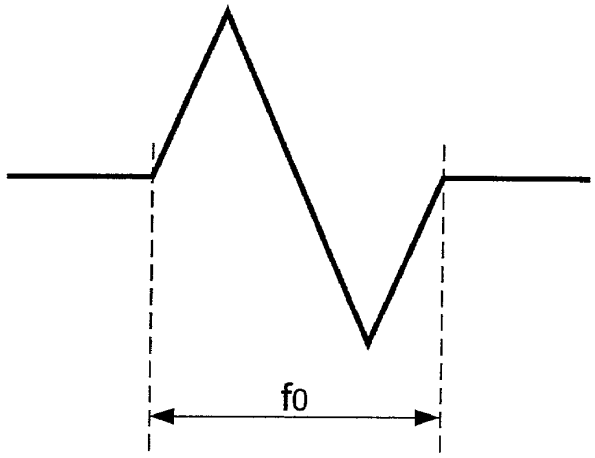

FIG. 37

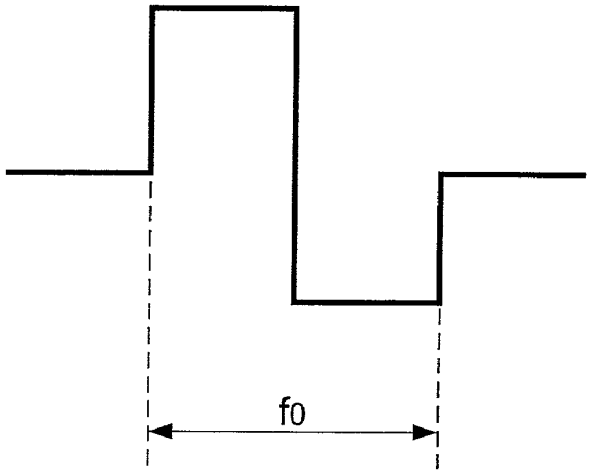

FIG. 38

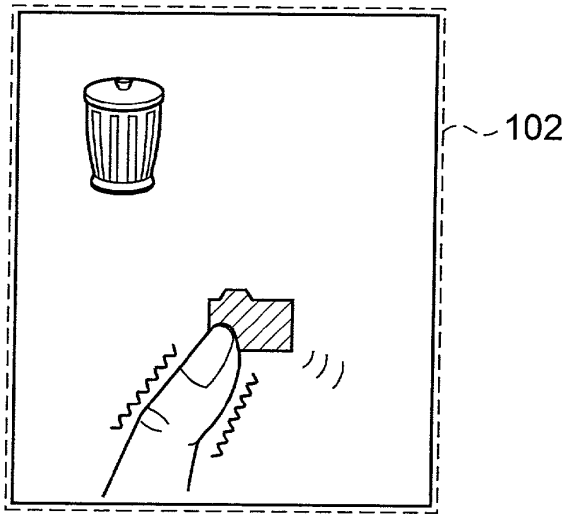

FIG. 39

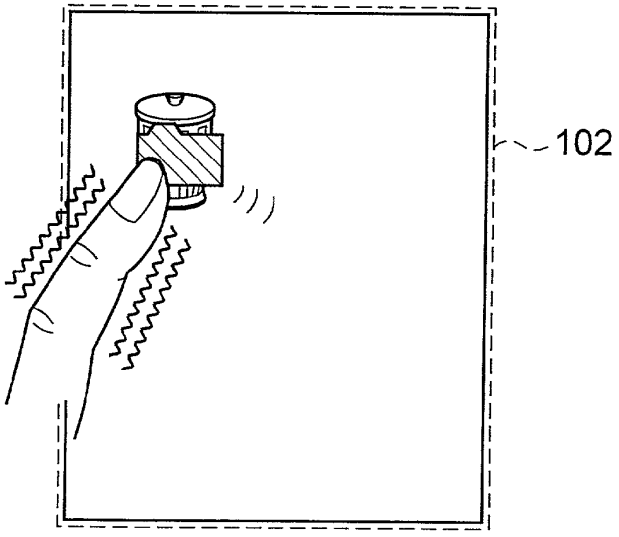

FIG. 40

112b

OPERATION INSTRUCTION	WAVEFORM DATA
ENTER	
CANCEL	
CLICK	
DRAG	
SELECT ICON	
DELETE DATA	
OPEN FILE	
POWER OFF	
⋮	⋮

FIG. 41

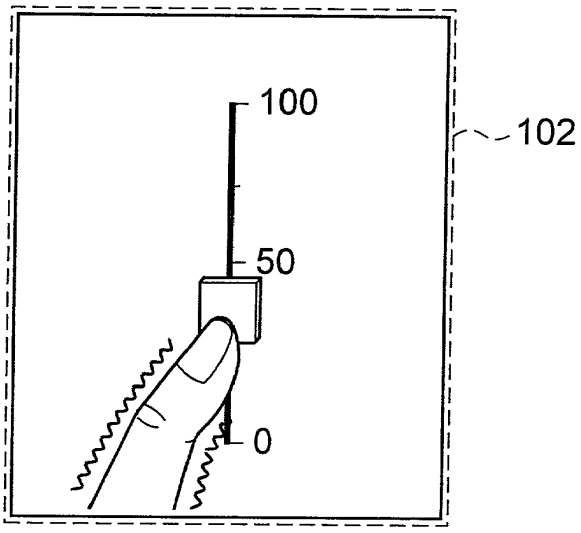

FIG. 42

112c

PARAMETER VALUE	WAVEFORM DATA
0~25	
26~50	
51~75	
76~100	

FIG. 43

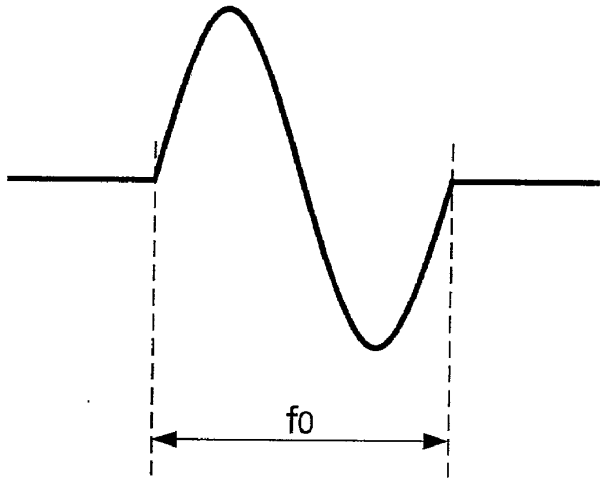

FIG. 44

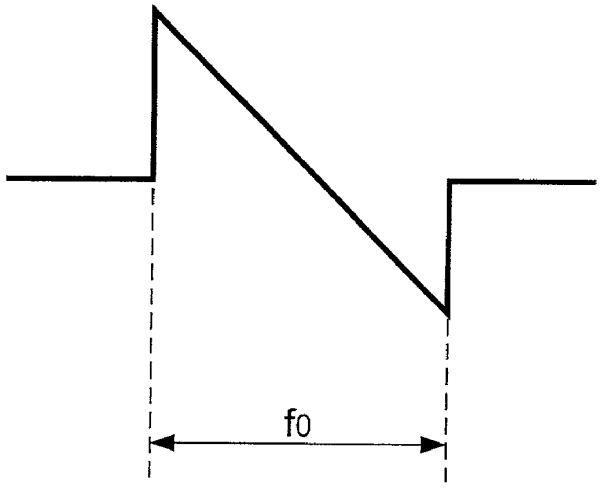

FIG. 45

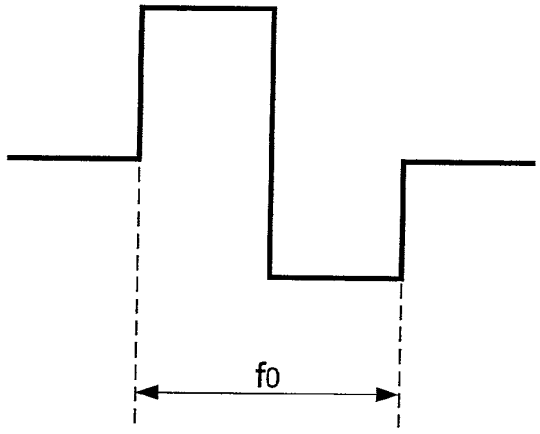

FIG. 46

112d

TOUCH BUTTON	AREA DATA	WAVEFORM DATA	
A		TOUCH OPERATION	
		PRESSING OPERATION	
B		TOUCH OPERATION	
		PRESSING OPERATION	
C		TOUCH OPERATION	
		PRESSING OPERATION	
⋮	⋮	⋮	

FIG. 47

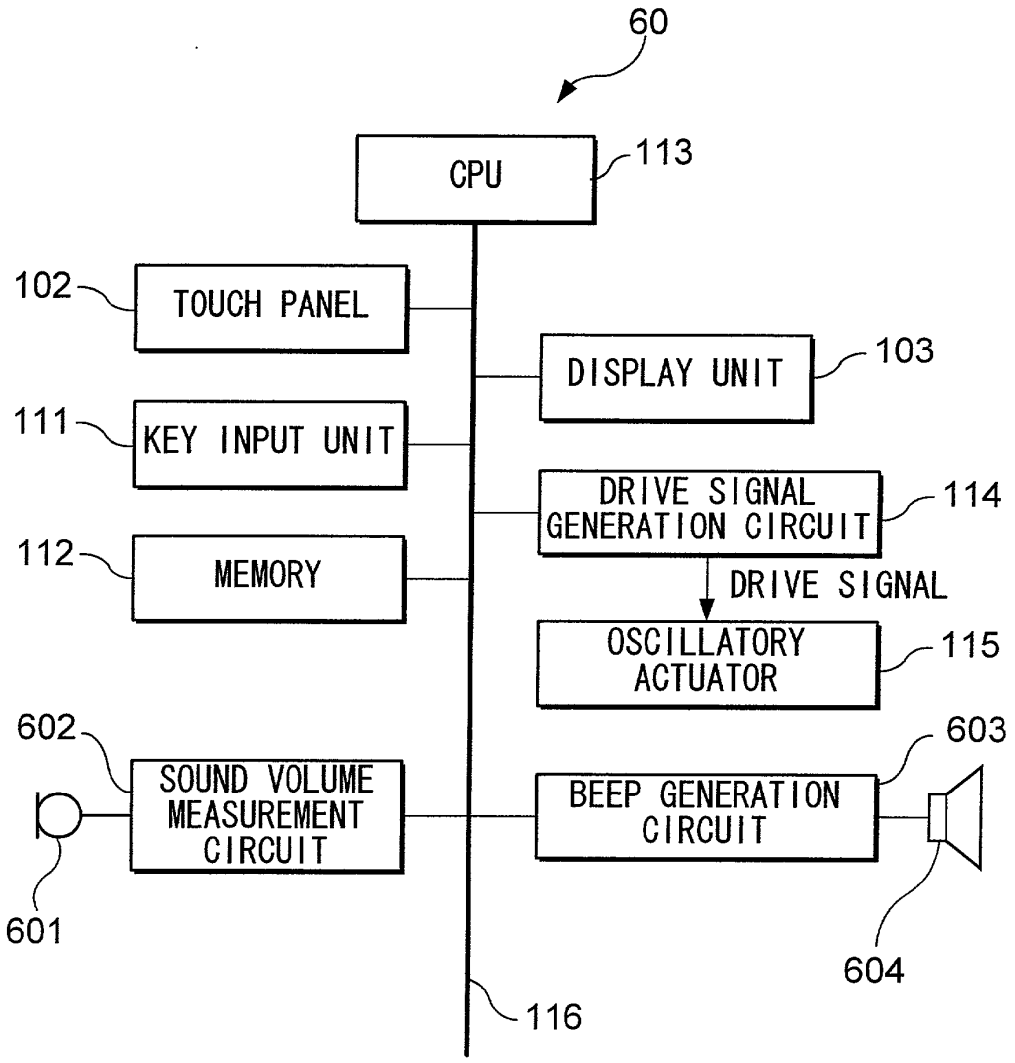
60
CPU
113
102
TOUCH PANEL
DISPLAY UNIT
103
111
KEY INPUT UNIT
DRIVE SIGNAL GENERATION CIRCUIT
114
112
MEMORY
DRIVE SIGNAL
OSCILLATORY ACTUATOR
115
602
603
SOUND VOLUME MEASUREMENT CIRCUIT
BEEP GENERATION CIRCUIT
601
604
116

FIG. 48

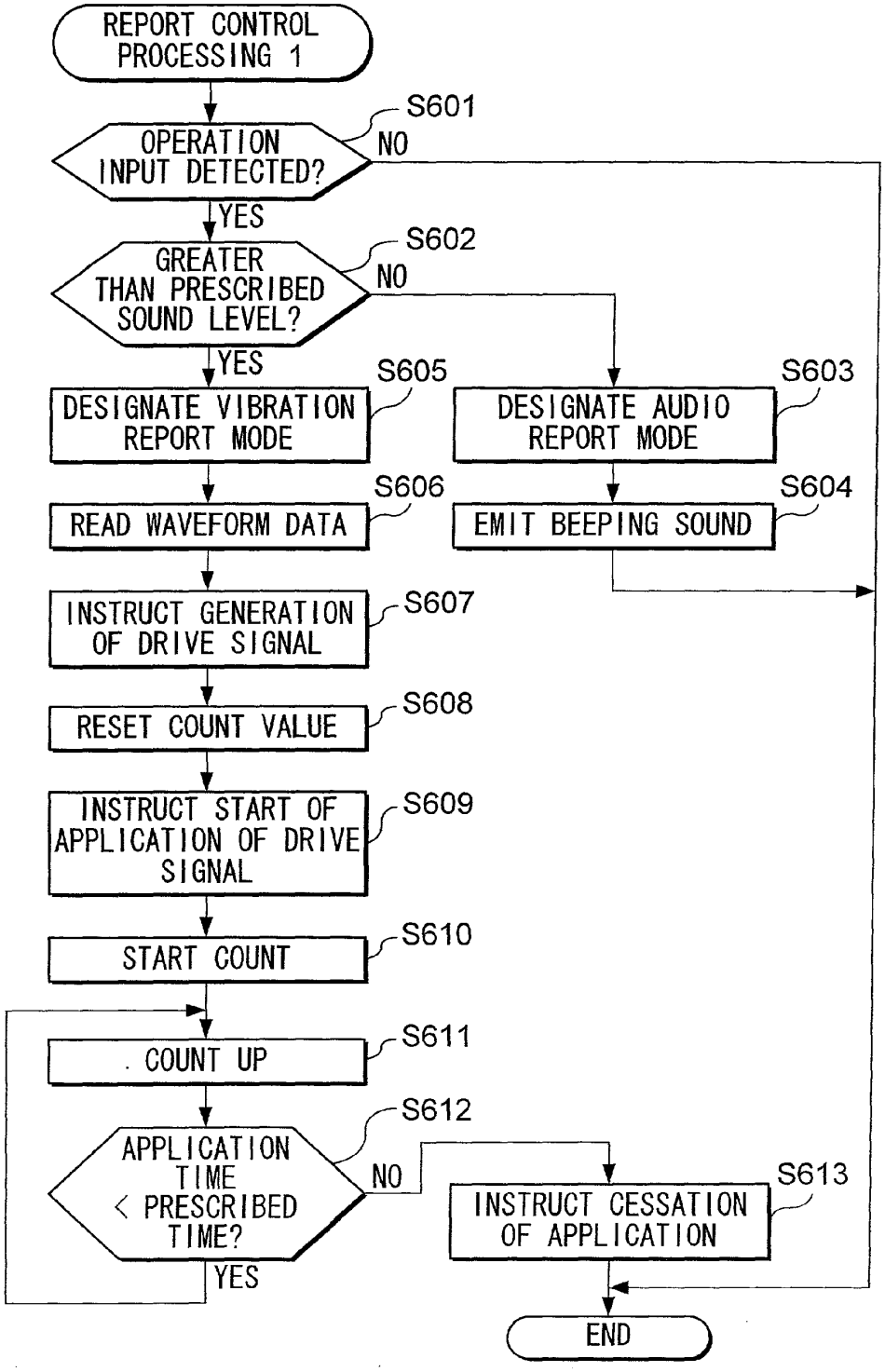
REPORT CONTROL PROCESSING 1
S601
OPERATION INPUT DETECTED?
NO
YES
S602
GREATER THAN PRESCRIBED SOUND LEVEL?
NO
YES
S605
DESIGNATE VIBRATION REPORT MODE
S603
DESIGNATE AUDIO REPORT MODE
S606
READ WAVEFORM DATA
S604
EMIT BEEPING SOUND
S607
INSTRUCT GENERATION OF DRIVE SIGNAL
S608
RESET COUNT VALUE
S609
INSTRUCT START OF APPLICATION OF DRIVE SIGNAL
S610
START COUNT
S611
COUNT UP
S612
APPLICATION TIME < PRESCRIBED TIME?
NO
YES
S613
INSTRUCT CESSATION OF APPLICATION
END

FIG. 49

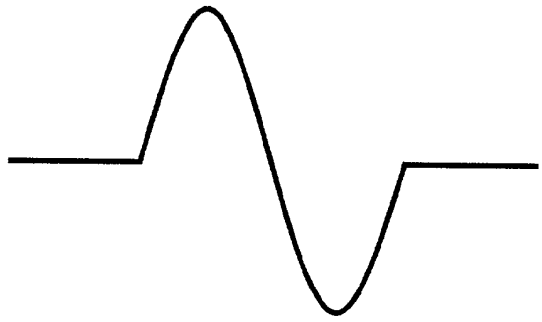

FIG. 50

FIG. 51

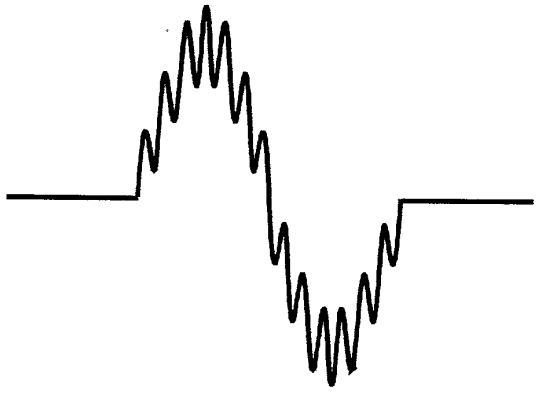

FIG. 52

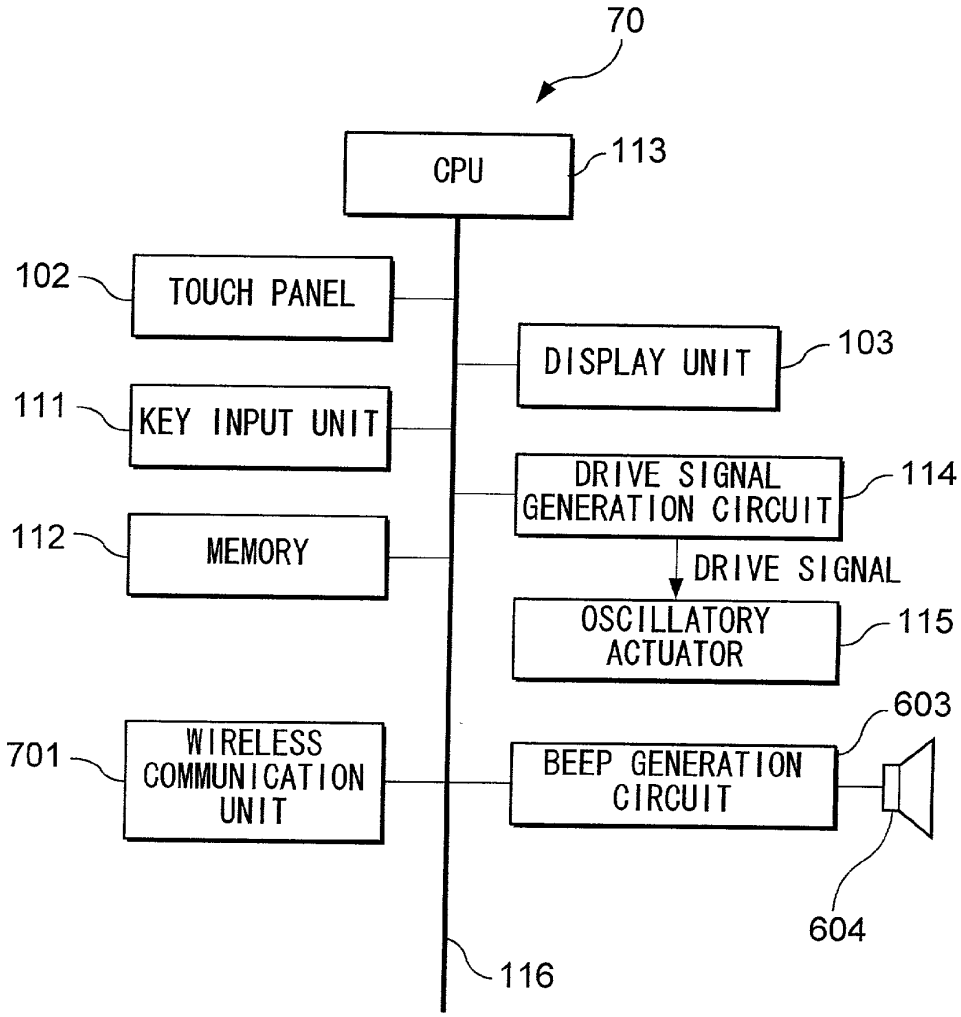
70
CPU
113
102
TOUCH PANEL
DISPLAY UNIT
103
111
KEY INPUT UNIT
DRIVE SIGNAL GENERATION CIRCUIT
114
112
MEMORY
DRIVE SIGNAL
OSCILLATORY ACTUATOR
115
603
701
WIRELESS COMMUNICATION UNIT
BEEP GENERATION CIRCUIT
604
116

FIG. 53

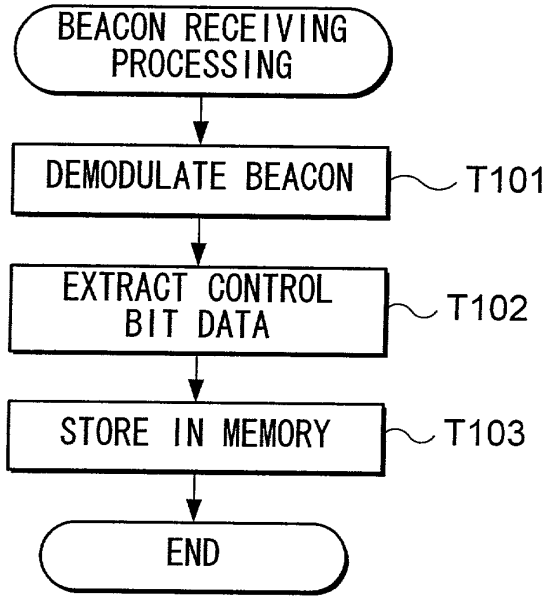

FIG. 54

112e

MODE NAME	BASE STATION ID
VIBRATION REPORT MODE	BS000001
	BS000159
	BS000439
	⋮

FIG. 55

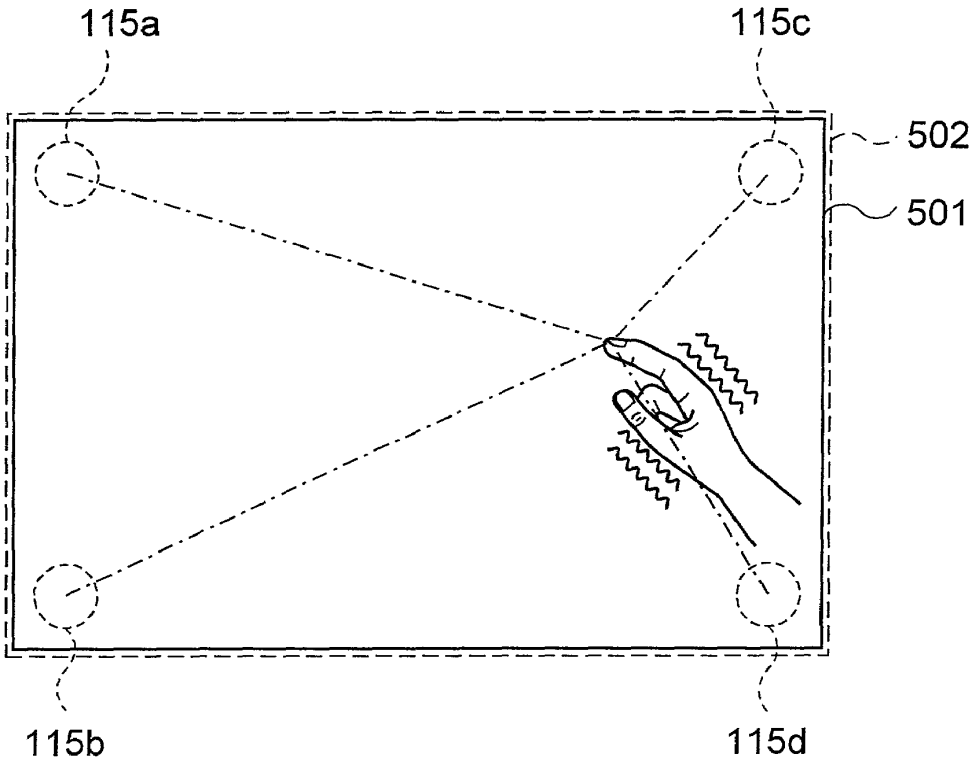

FIG. 56

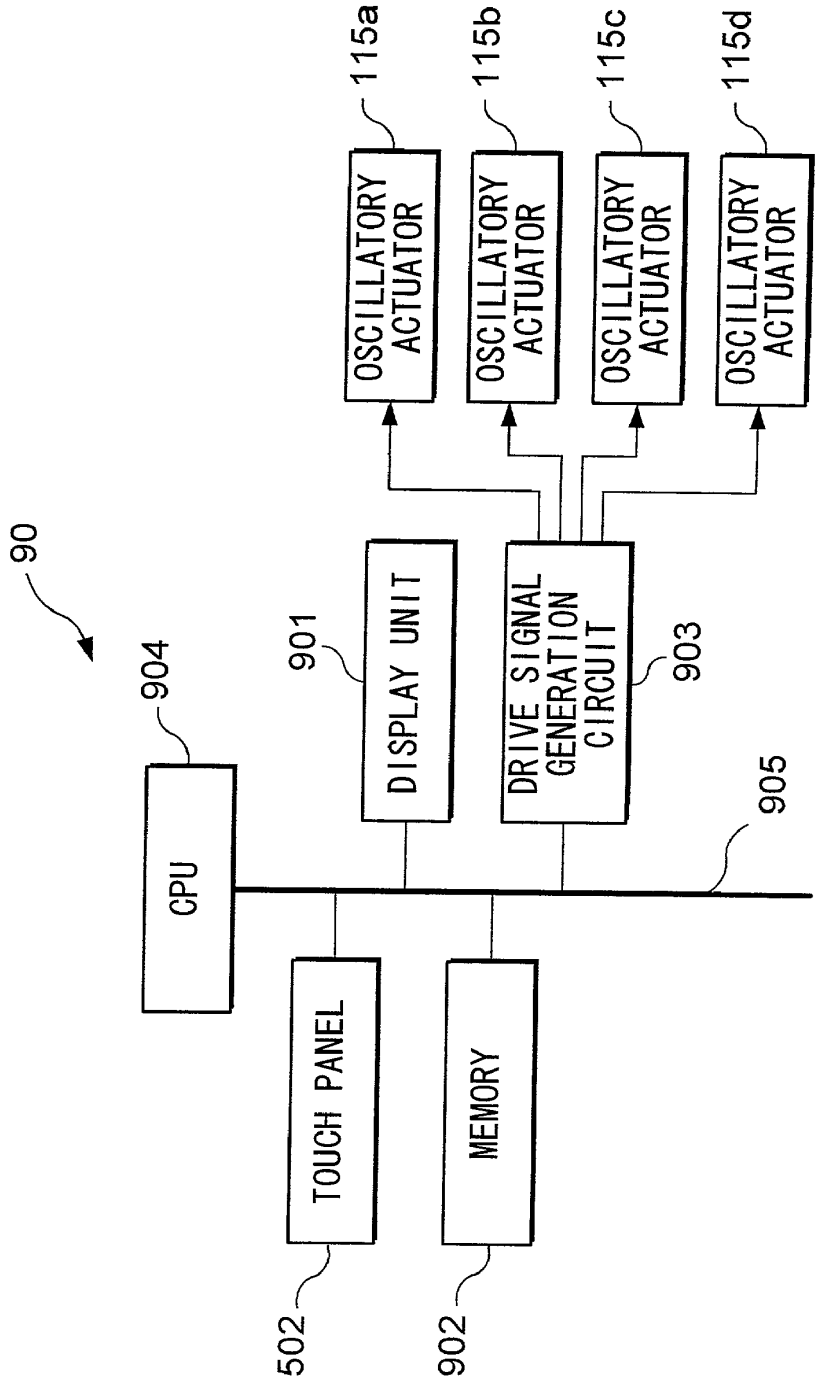
90
904
CPU
901
DISPLAY UNIT
DRIVE SIGNAL GENERATION CIRCUIT
903
905
TOUCH PANEL
502
MEMORY
902
OSCILLATORY ACTUATOR
115a
OSCILLATORY ACTUATOR
115b
OSCILLATORY ACTUATOR
115c
OSCILLATORY ACTUATOR
115d

FIG. 57

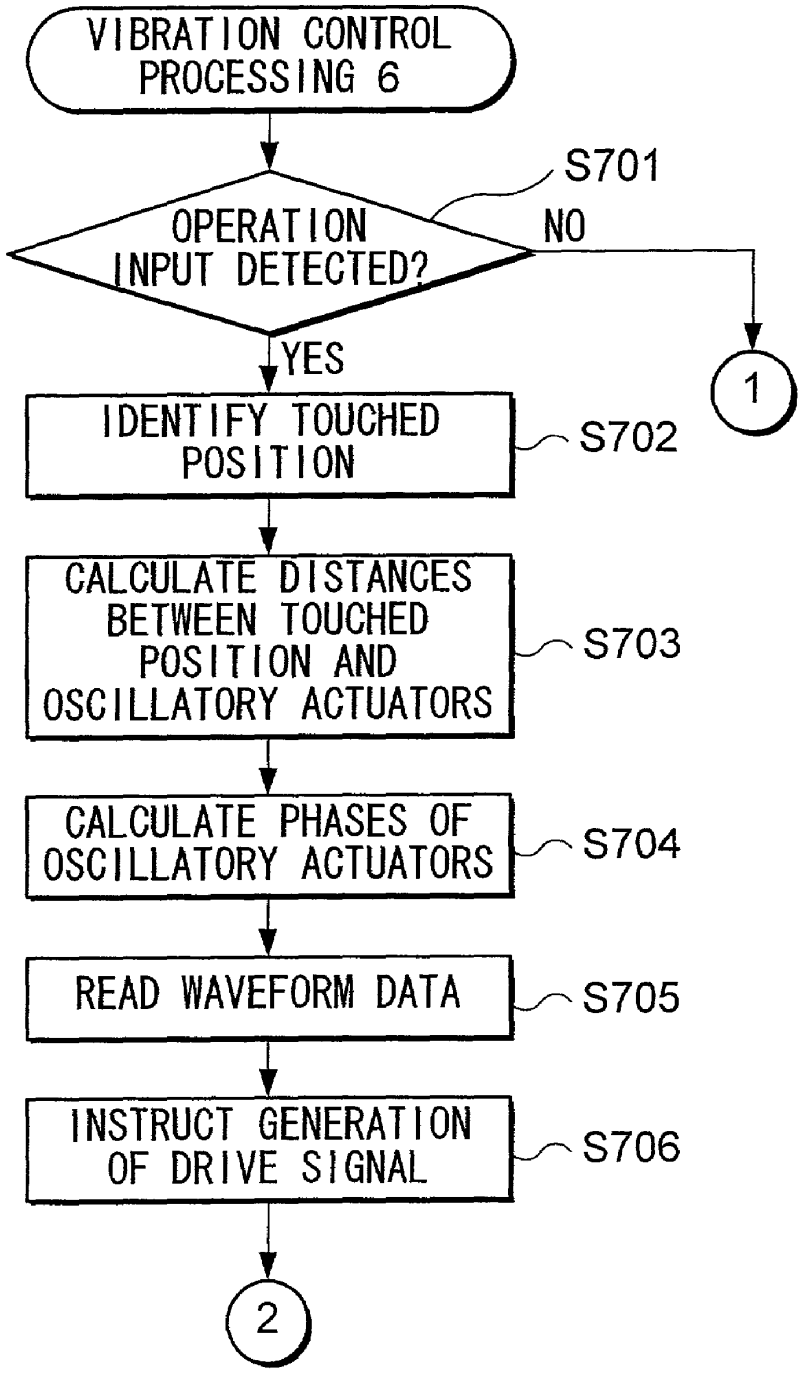
VIBRATION CONTROL PROCESSING 6
S701
OPERATION INPUT DETECTED?
NO
YES
1
IDENTIFY TOUCHED POSITION
S702
CALCULATE DISTANCES BETWEEN TOUCHED POSITION AND OSCILLATORY ACTUATORS
S703
CALCULATE PHASES OF OSCILLATORY ACTUATORS
S704
READ WAVEFORM DATA
S705
INSTRUCT GENERATION OF DRIVE SIGNAL
S706
2

FIG. 58

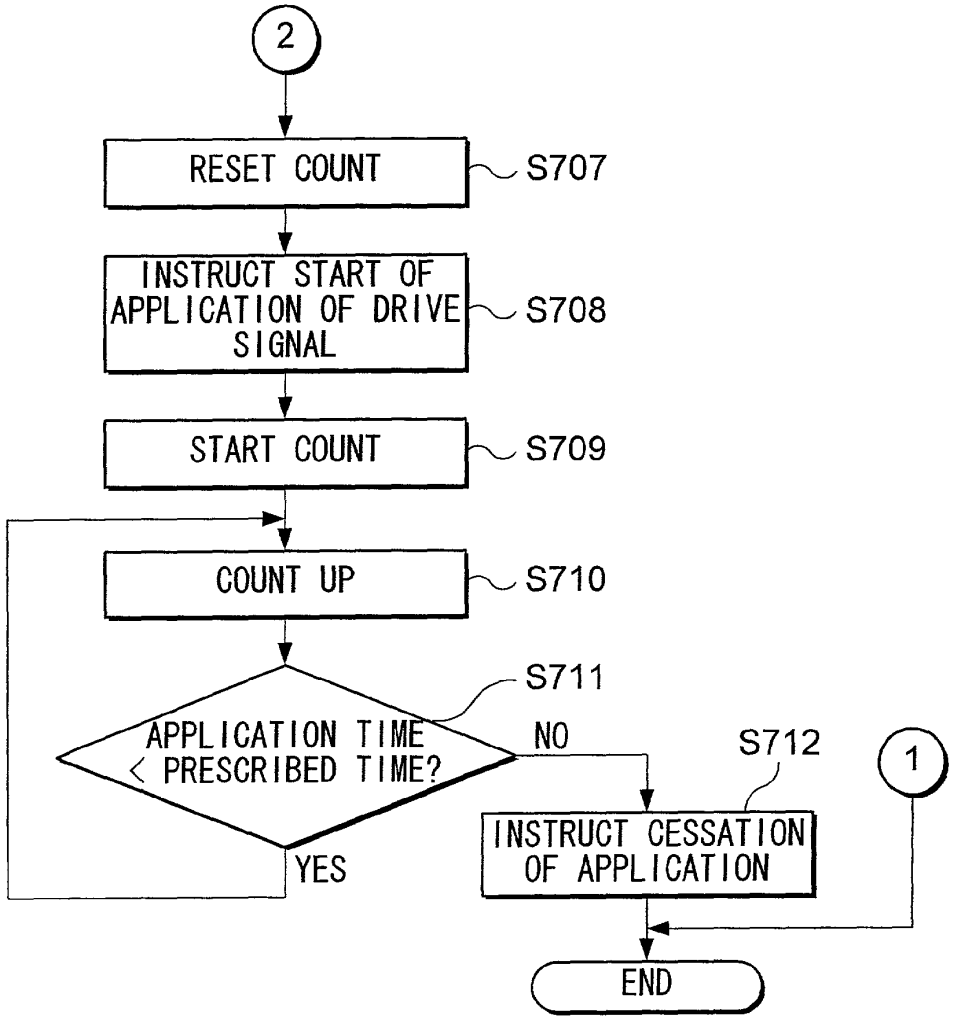
2
RESET COUNT
S707
INSTRUCT START OF APPLICATION OF DRIVE SIGNAL
S708
START COUNT
S709
COUNT UP
S710
S711
APPLICATION TIME < PRESCRIBED TIME?
NO
YES
S712
INSTRUCT CESSATION OF APPLICATION
1
END

FIG. 59

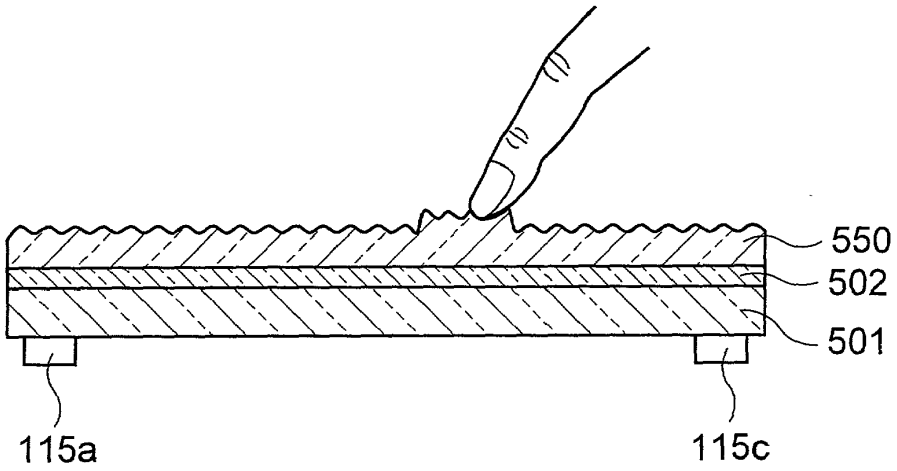

FIG. 60

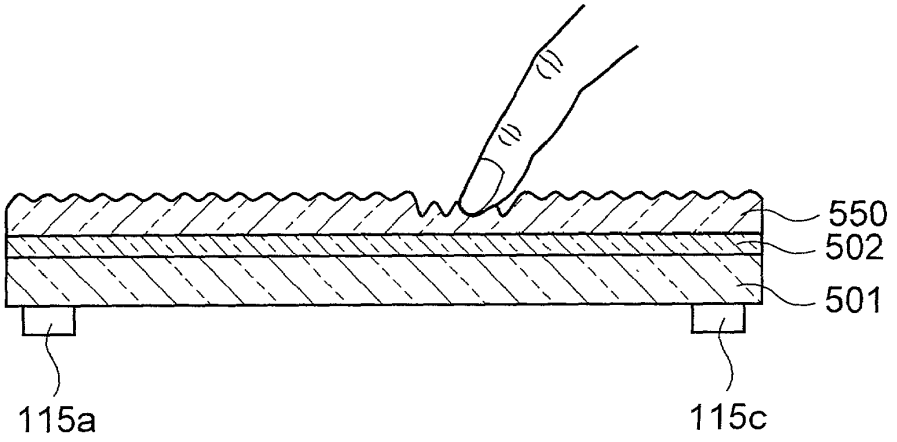

FIG. 61

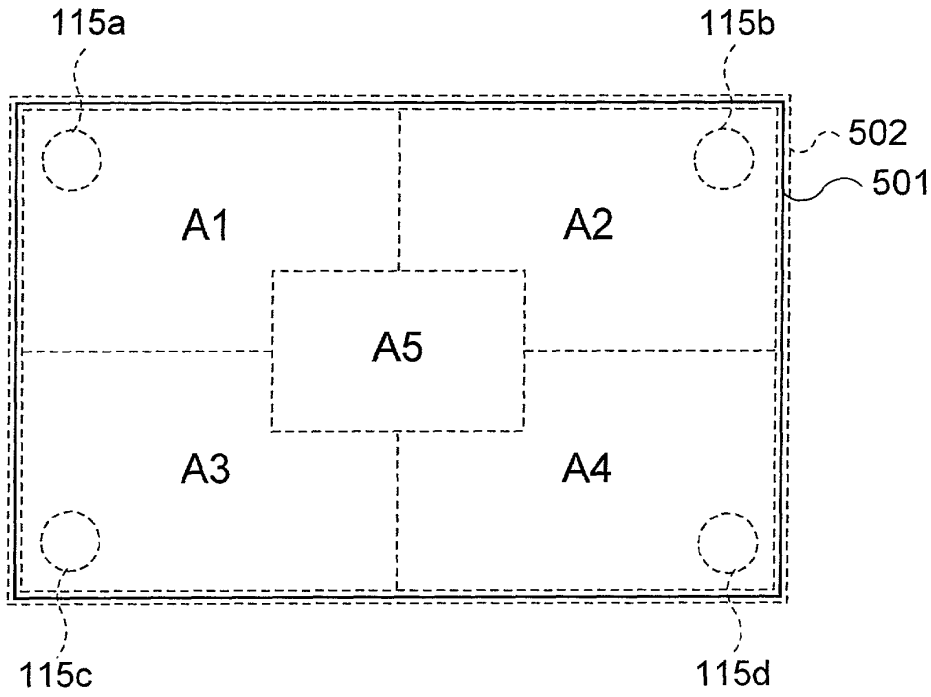

FIG. 62

902

AREA DATA		ID INFORMATION OF OSCILLATORY ACTUATORS
A1		115a
A2		115b
A3		115c
A4		115d
A5		115a,115b,115c,115d

FIG. 63

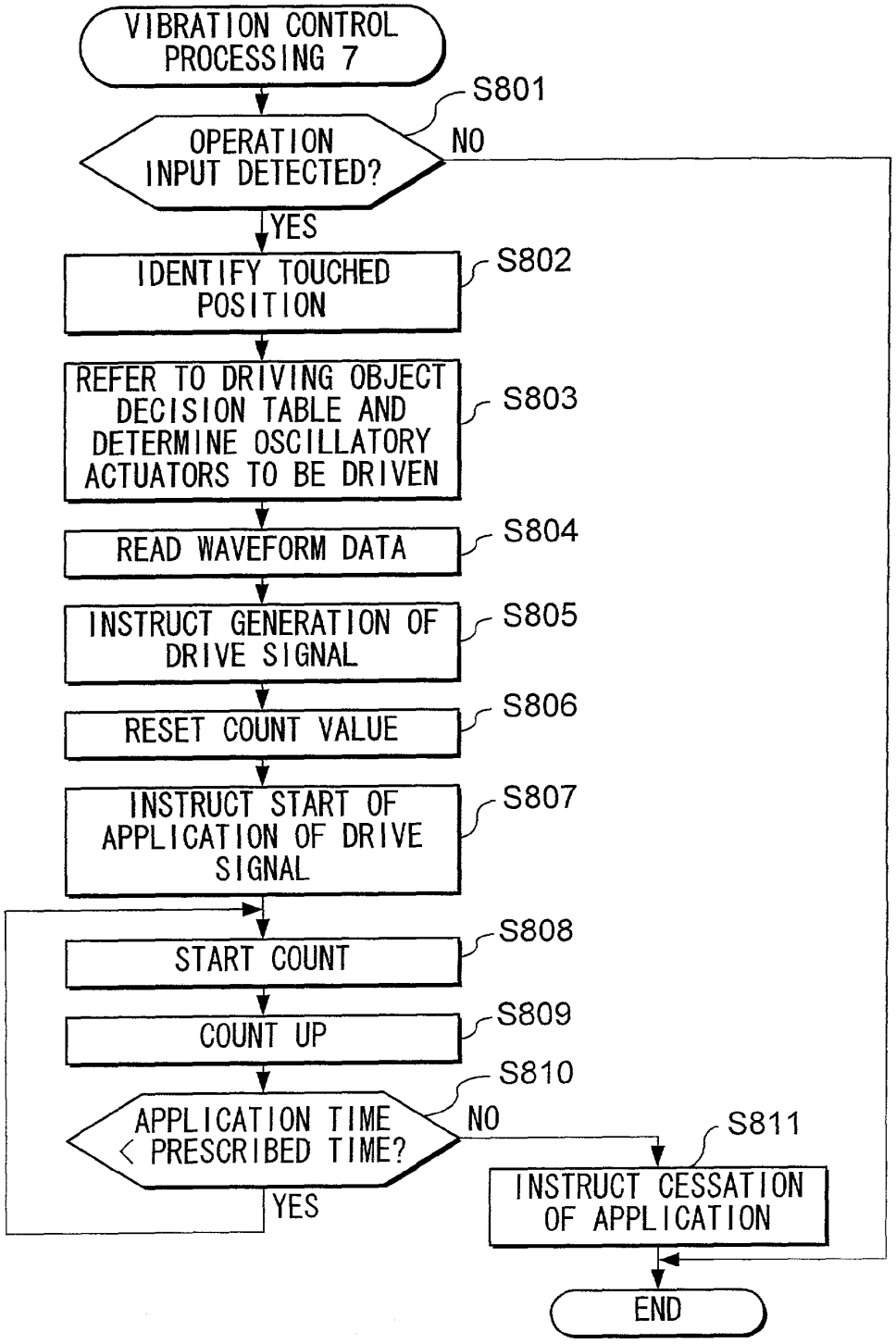
VIBRATION CONTROL PROCESSING 7
S801
OPERATION INPUT DETECTED?
NO
YES
IDENTIFY TOUCHED POSITION
S802
REFER TO DRIVING OBJECT DECISION TABLE AND DETERMINE OSCILLATORY ACTUATORS TO BE DRIVEN
S803
READ WAVEFORM DATA
S804
INSTRUCT GENERATION OF DRIVE SIGNAL
S805
RESET COUNT VALUE
S806
INSTRUCT START OF APPLICATION OF DRIVE SIGNAL
S807
START COUNT
S808
COUNT UP
S809
S810
APPLICATION TIME < PRESCRIBED TIME?
NO
S811
YES
INSTRUCT CESSATION OF APPLICATION
END

FIG. 64

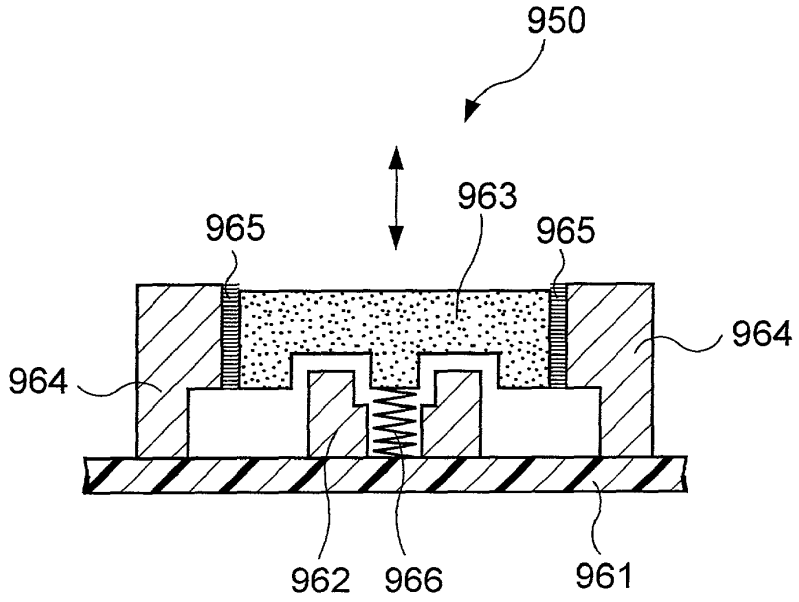
950
963
965
965
964
964
962
966
961

FIG. 65

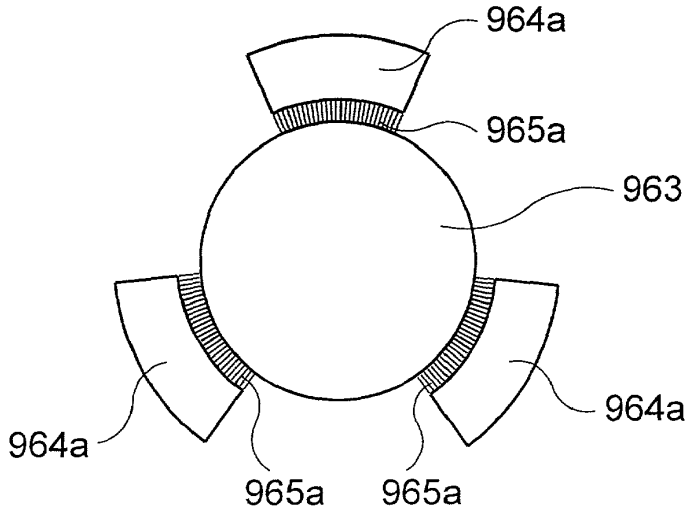
964a
965a
963
964a
964a
965a
965a

FIG. 66

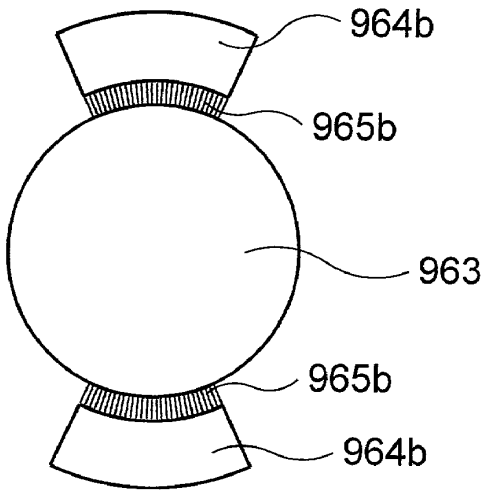

FIG. 67

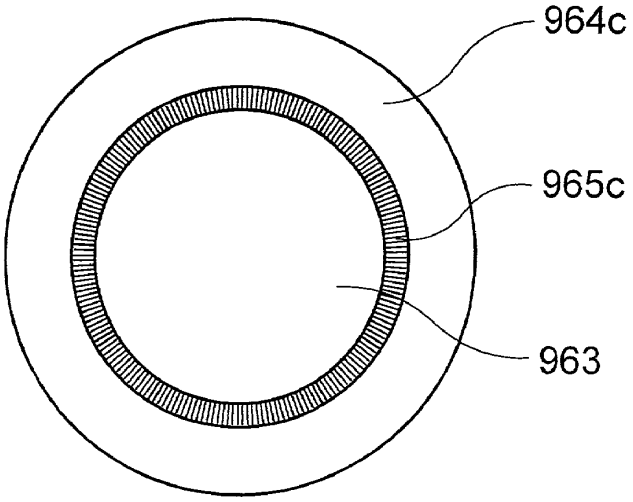

FIG. 68

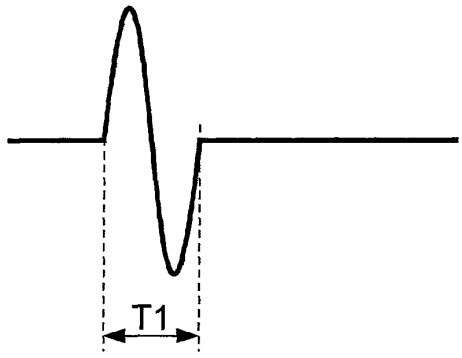

FIG. 69

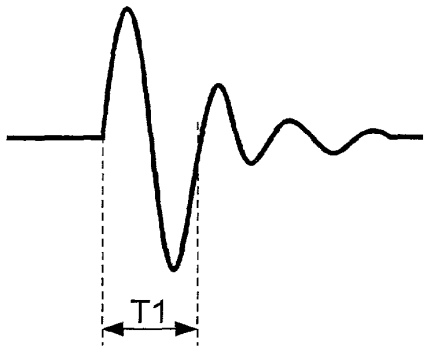

FIG. 70

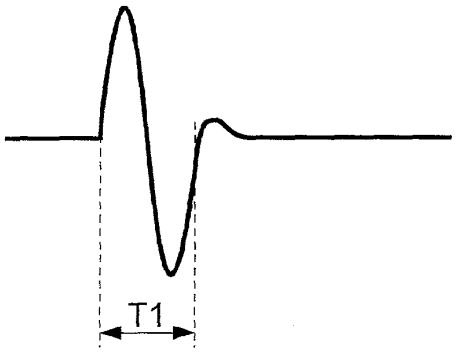

FIG. 71

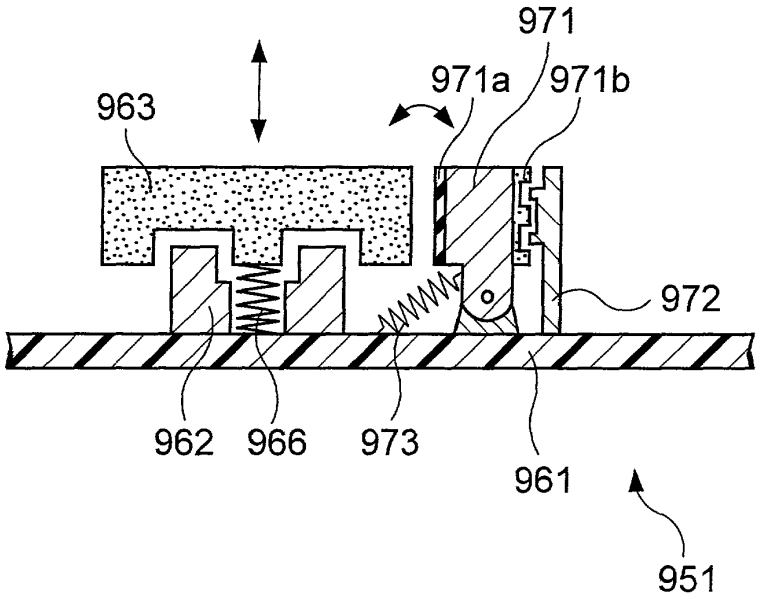
971
971a
971b
963
972
962
966
973
961
951

FIG. 72

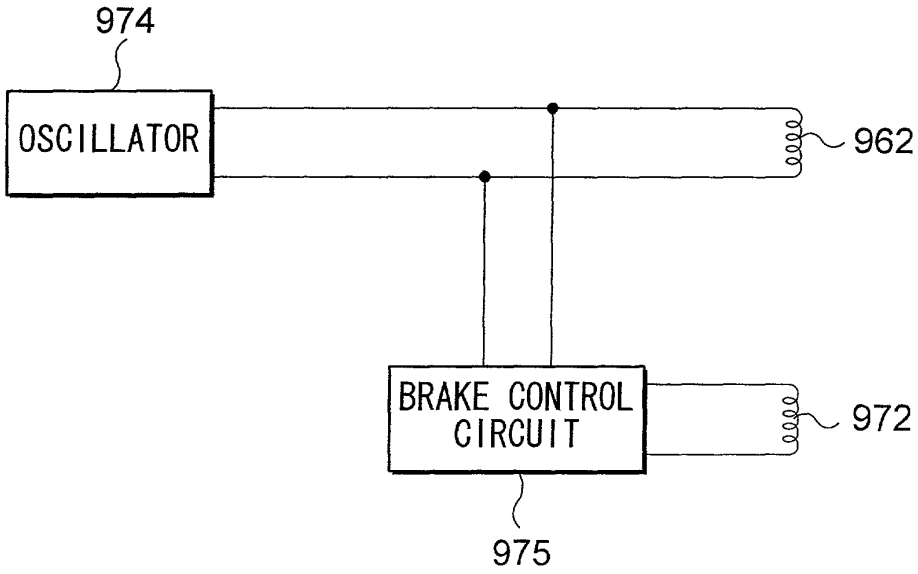
974
OSCILLATOR
962
BRAKE CONTROL CIRCUIT
972
975

FIG. 73

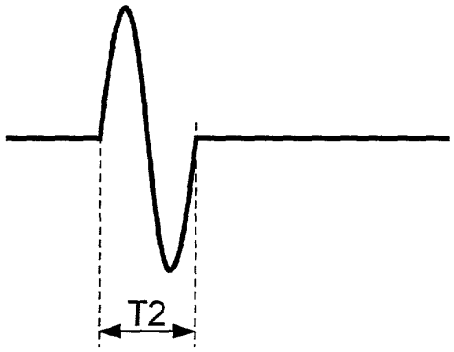

FIG. 74

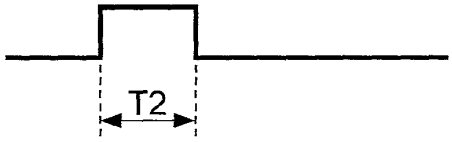

FIG. 75

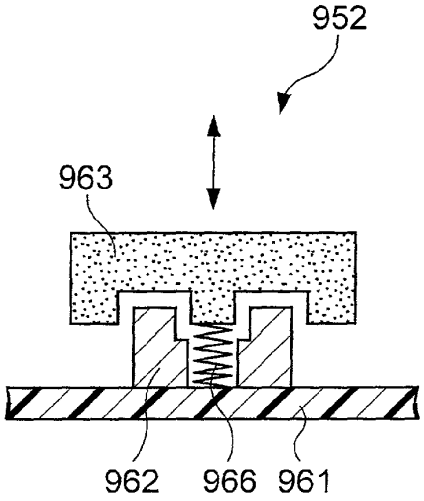

FIG. 76

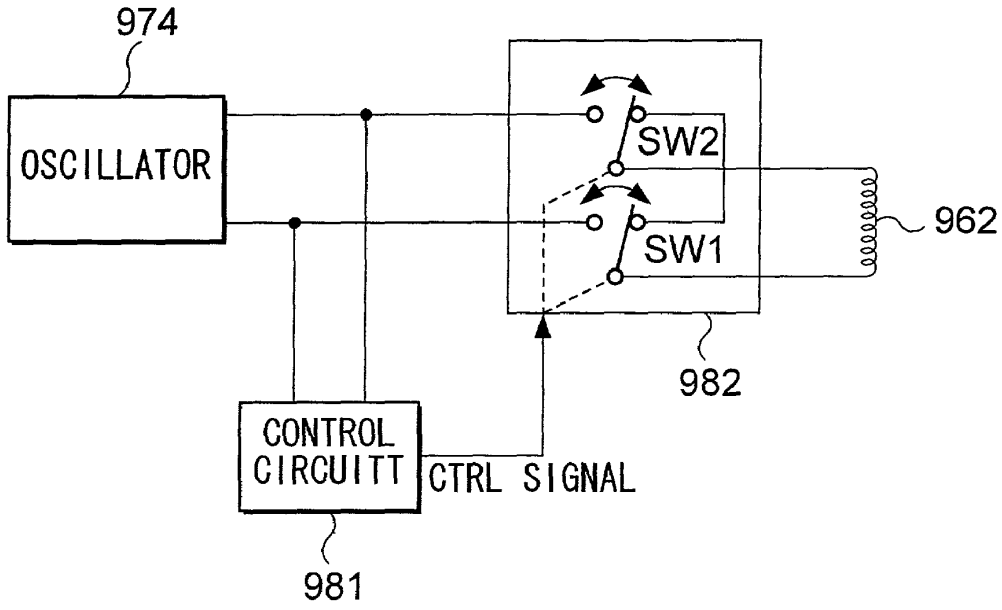
974
OSCILLATOR
SW2
SW1
962
982
CONTROL CIRCUITT
CTRL SIGNAL
981

FIG. 77

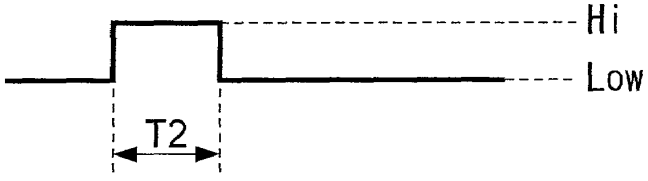
Hi
Low
T2

FIG. 78

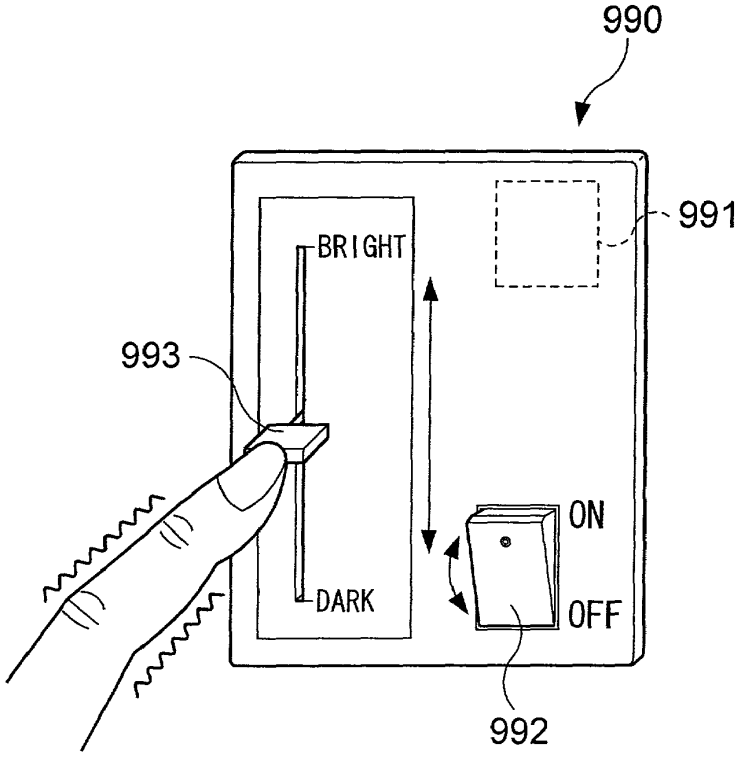

FIG. 79

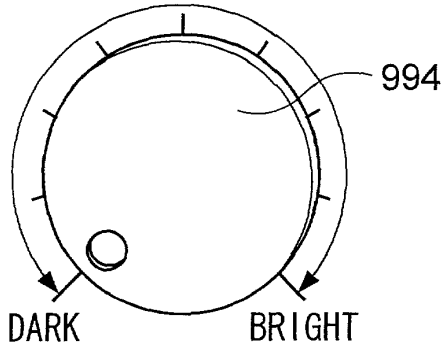

FIG. 80

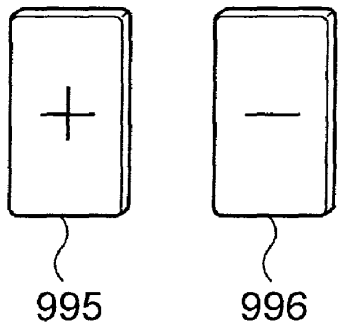

FIG. 81

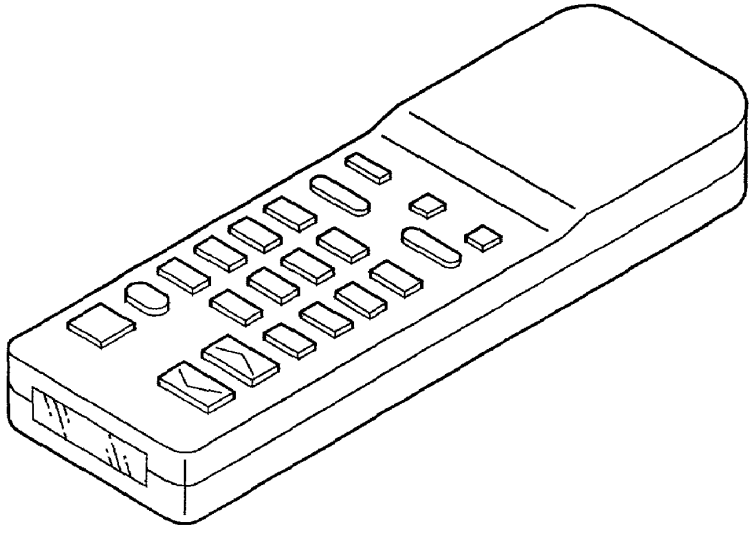

FIG. 82

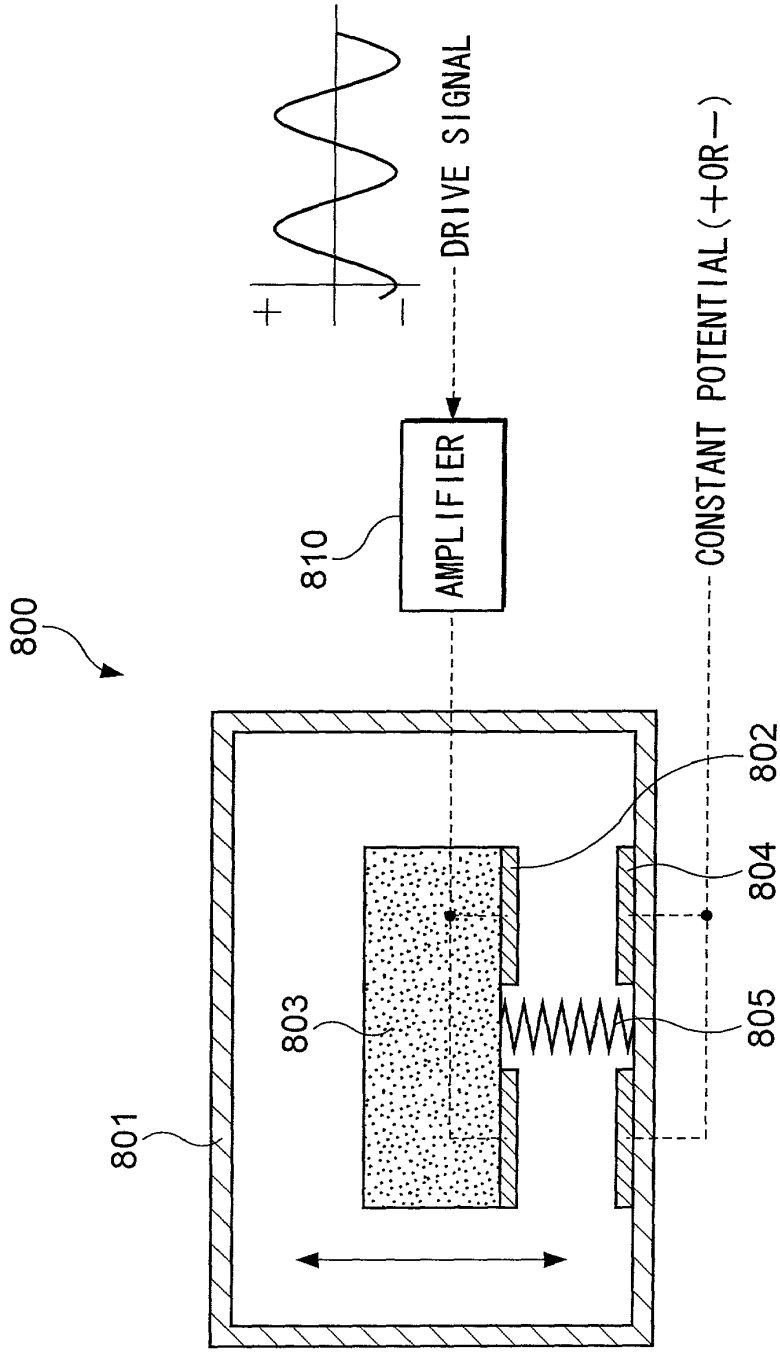
800
810
AMPLIFIER
DRIVE SIGNAL
+
−
CONSTANT POTENTIAL (+OR−)
801
803
802
804
805

FIG. 83

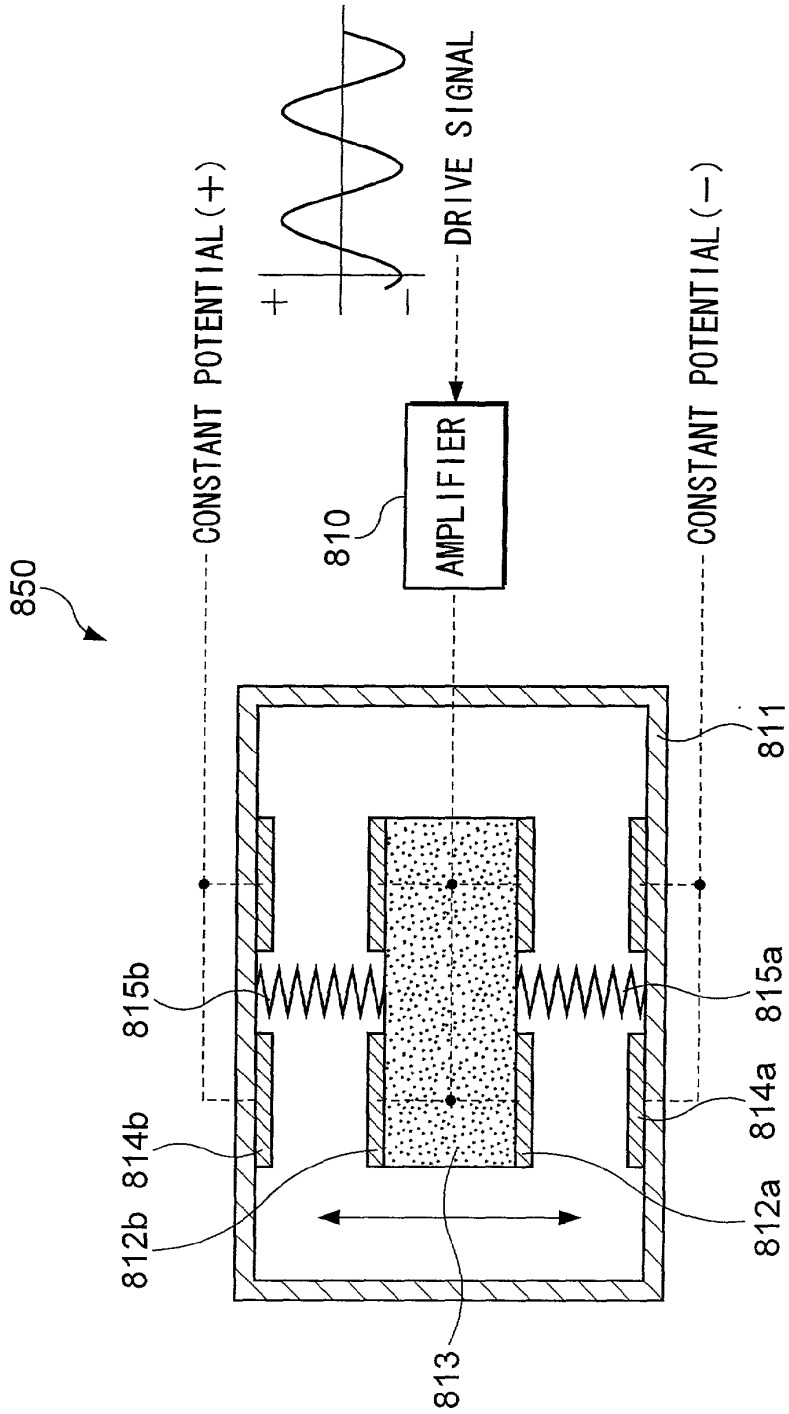
850
CONSTANT POTENTIAL (+)
+
−
DRIVE SIGNAL
810
AMPLIFIER
CONSTANT POTENTIAL (−)
811
815b
815a
814b
814a
812b
812a
813

FIG. 84

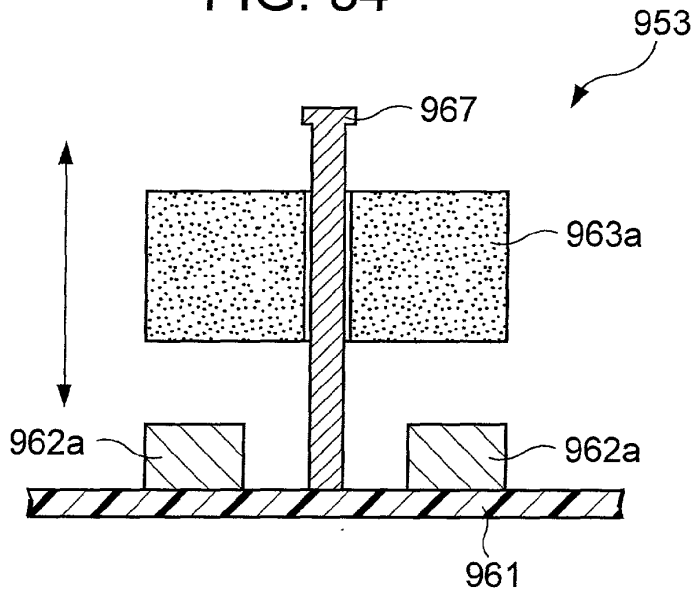
953
967
963a
962a
962a
961

FIG. 85

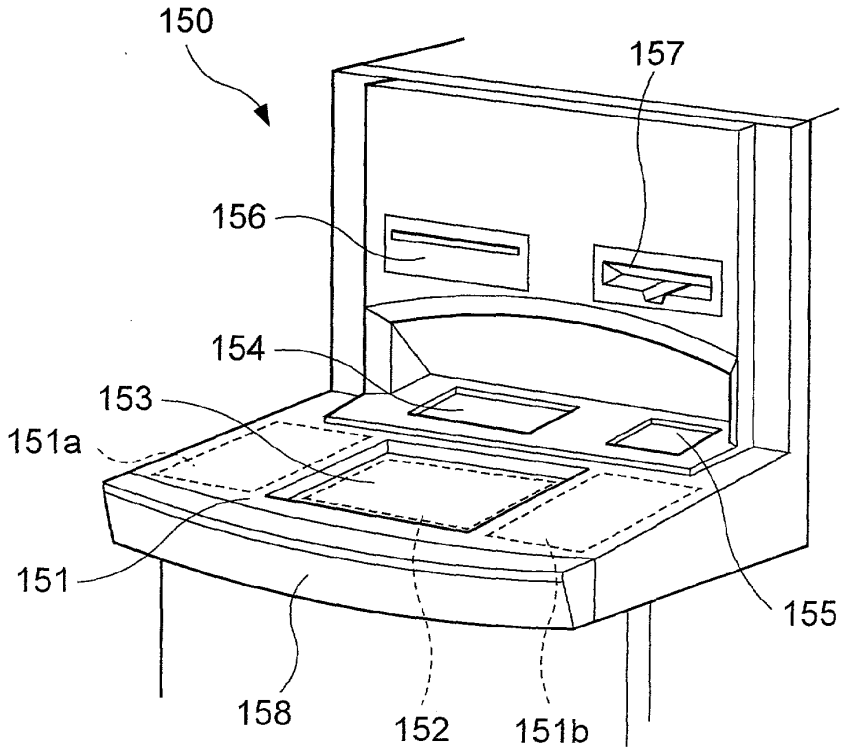
150
157
156
154
153
151a
151
155
158
152
151b

ELECTRONIC APPARATUS VIBRATION GENERATOR, VIBRATORY INFORMING METHOD AND METHOD FOR CONTROLLING INFORMATION

TECHNICAL FIELD

[0001] The present invention relates to a user interface and vibration generation mechanism of an electronic device.

BACKGROUND ART

[0002] PDAs (personal digital assistants), personal computers, ATMs (automatic teller machines), and other various types of electronic devices have, for example, operation buttons or keyboards, touch panels, and other user interfaces. Users use these user interfaces to perform operation inputs to the electronic equipment, such as inputting words and selecting a processing to be executed.

[0003] In the case of a portable electronic device provided with a keyboard or operation buttons, however, keys or operation buttons are of a reduced size, weight, and thickness to conform with an overall reduction in size, weight, and thickness of the device; and, consequently, a user may not be able to feel that a button has been fully depressed. To confirm if depression of keys or operation buttons has been received in a portable electronic device, a user must view contents of a display of a screen of the device.

[0004] In the case of an electronic device provided with a touch panel, a user uses his or her fingertip or an attached pen to operate a touch panel. However, if the fingertip or pen is not properly pointed at the touch panel, or the touch panel is not pressed with sufficient force, the operation will be invalid. To confirm whether a touch operation on a touch panel has been received by an electronic device, as in the above case, a user must view contents of the display.

[0005] There are other types of electronic devices which report to a user, by way of a beep sound and the like, that an operation input has been received, but such an audio report is almost completely ineffective in a noisy environment such as in a street.

DISCLOSURE OF INVENTION

[0006] An object of the present invention is to provide an electronic device, a vibration generator, a vibration-type reporting method, and a report control method enabling a user to easily confirm without viewing a screen receipt of an input operation or a response of the electronic device with respect to an operation input.

[0007] To achieve the above object, the present invention provides an electronic device having an operating unit for receiving an operation input, a vibration generator for imparting vibration to a hand-touched portion of the electronic device, and vibration control means for causing the vibration generator to generate vibration when it is detected that an operation input in the operating unit has been received. Further, the present invention provides a vibration-type reporting method for an electronic device whereby a vibration generator provided in the electronic device is caused to vibrate, which vibration is transmitted to a hand-touched portion when it is detected that an operation input to the operating unit is received.

[0008] According to the present invention, the electronic device reports to a user that an operation input has been received, by causing the hand-touched portion of the electronic device to vibrate.

[0009] Further, the present invention provides an electronic device provided with an operating unit for receiving an operation input, a vibration generator for imparting vibration to the operating unit, and vibration control means for causing vibration from the vibration generator in the case of detecting that an operation input to the operating unit is received, the vibration generator being provided with a weight, a support member supporting the weight to allow it to reciprocate, and connected to the operating unit or a base member of the vibration generator in contact with the operating unit; and excitation generating means for imparting excitation to make the weight reciprocate. Further, the present invention provides a vibration-type reporting method in an electronic device comprising driving a vibration generator provided in the electronic device when it is detected that an operation input to an operating unit is received, and having the vibration generator cause reciprocation of a weight connected to the operating unit or a base member of the vibration generator in contact with the operating unit to cause vibration in the operating unit.

[0010] According to the present invention, the electronic device reports to a user that an operation input has been received by causing vibration at the operating unit.

[0011] Further, the present invention provides an electronic device provided with an operating unit for receiving an operation input, a vibration generator for imparting vibration to a user, and vibration control means for causing vibration from the vibration generator in the case of detecting that execution of processing instructed by an operation input to the operating unit has ended. Further, the present invention provides a vibration-type reporting method in an electronic device comprising causing vibration from a vibration generator provided in the electronic device to give vibration to the user in the case of detecting that execution of processing instructed by an operation input to the operating unit has ended.

[0012] According to the present invention, the electronic device reports to a user by vibration that the execution of processing instructed by operation input has ended.

[0013] Further, the present invention provides an electronic device provided with an operating unit for receiving an operation input, a first vibration generator for imparting vibration to the operating unit, a second vibration generator for imparting vibration to a hand-touched portion of the electronic device, and vibration control means for causing vibration from at least one of the first vibration generator and the second vibration generator designated in advance by the user in the case of detecting that an operation input to the operating unit has been received. Further, the present invention provides a vibration-type reporting method in an electronic device comprising causing vibration from at least one of a first vibration generator for imparting vibration to the operating unit and a second vibration generator imparting vibration to a hand-touched portion of the electronic device designated in advance by the user in the case of detecting that an operation input to the operating unit has been received, the first and second vibration generators being provided in the electronic device.

[0014] According to the present invention, the electronic device reports to the user that an operation input has been received by causing vibration at a location designated by the user in advance.

[0015] Further, the present invention provides an electronic device provided with an operating unit for receiving an operation input, a first vibration generator for imparting vibration to the operating unit, a second vibration generator for imparting vibration to a hand-touched portion of the electronic device, detecting means for detecting whether the electronic device is being held by a user, and vibration control means for selecting at least one of the first vibration generator and the second vibration generator in accordance with the results of detection of the detecting means and causing vibration to be generated from the selected vibration generator in the case of detecting that an operation input to the operating unit has been received. Further, the present invention provides a vibration-type reporting method in an electronic device comprising selecting at least one of a first vibration generator for imparting vibration to an operating unit and a second vibration generator for imparting vibration to a hand-touched portion of the electronic device provided in the electronic device and causing vibration to be generated from the selected vibration generator to give vibration to the user in the case of detecting that an operation input to the operating unit has been received.

[0016] According to the present invention, the electronic device reports to the user that an operation input has been received by causing vibration at a different location in accordance with whether the electronic device is being held by the user.

[0017] Further, the present invention provides an electronic device provided with a display panel over which a touch panel is superposed, a vibration generator set in the display panel, an elastic member comprised using an elastic body for supporting the display panel in a vibratable manner by vibration generated from the vibration generator, and vibration control means for causing vibration to be generated from the vibration generator in the case of detecting that a touch operation on the touch panel has been received, the vibration generator provided with a weight, a support member supporting the weight so as to allow it to reciprocate, and connected to the display panel or a base member of the vibration generator in contact with the display panel, and excitation generating means for imparting excitation for making the weight reciprocate.

[0018] According to the present invention, the electronic device reports to the user that a touch operation has been received by causing vibration at the touch panel together with the display panel.

[0019] Further, the present invention provides an electronic device provided with a display panel over which a touch panel is superposed, a vibration generator supporting the display panel and imparting vibration to the display panel, and vibration control means for causing vibration to be generated from the vibration generator in the case of detecting that a touch operation on the touch panel has been received, the vibration generator provided with a weight, a support member supporting the weight so as to allow it to reciprocate, and connected to the display panel or a base member of the vibration generator in contact with the display panel, and excitation generating means for imparting excitation for making the weight reciprocate.

[0020] According to the present invention, the electronic device reports to the user that a touch operation has been received by causing vibration at the touch panel together with the display panel.

[0021] Further, the present invention provides an electronic device provided with a display, a touch panel covering the display screen of the display, a vibration generator provided between the display and the touch panel, supporting the touch panel on the display screen, and imparting vibration to the touch panel, and vibration control means for causing vibration to be generated from the vibration generator in the case of detecting that a touch operation on the touch panel has been received.

[0022] According to the present invention, the electronic device reports to the user that a touch operation has been received by causing the touch panel to vibrate.

[0023] Further, the present invention provides an electronic device provided with a display, a touch panel covering a display screen of the display, a vibration generator placed at the touch panel and imparting vibration to the touch panel, a vibration absorbing member provided between the display and the touch panel and absorbing a vibration component which would be transferred to the display in vibration components generated from the vibration generator, and vibration control means for causing vibration to be generated from the vibration generator in the case of detecting that a touch operation on the touch panel has been received.

[0024] According to the present invention, the electronic device reports to the user that a touch operation has been received by causing only the touch panel on the display screen to vibrate.

[0025] Further, the present invention provides an electronic device provided with an operating unit for receiving an operation input, a vibration generator at least a part of which is provided exposed to the outside from a housing of the electronic device and imparting vibration directly to the user, and vibration control means for causing vibration to be generated from the vibration generator in the case of detecting that an operation input to the operating unit has been received.

[0026] According to the present invention, the electronic device reports that a touch operation has been received by directly imparting vibration to the user from the vibration generator.

[0027] Further, the present invention provides an electronic device provided with an operating unit for receiving an operation input, a vibration generator for imparting vibration to part of a housing of the electronic device different from the operating unit, and vibration control means for identifying a type of operation input and causing vibration to be generated from the vibration generator by a vibration mode linked with the type of the operation input in the case of detecting that an operation input to the operating unit has been received. Further, the present invention provides a vibration-type reporting method in an electronic device comprising identifying the type of operation input, causing vibration to be generated from a vibration generator provided in the electronic device by a vibration mode linked with the type of the operation input, and causing part of a housing of the electronic device different from the operating unit to vibrate.

[0028] According to the present invention, the electronic device reports to the user that an operation input has been received by causing part of the housing different from the operating unit to vibrate by a vibration mode in accordance with the type of the operation input.

[0029] Further, the present invention provides an electronic device provided with an operating unit for receiving an operation input, a vibration generator for imparting vibration to part of a housing of the electronic device different from the operating unit, changing means for changing a value of a parameter for controlling the electronic device in accordance with operation input to the operating unit, and vibration control means for causing vibration to be generated from the vibration generator by a vibration mode linked with a value of a parameter changed by the changing means by the operation input in the case of detecting that an operation input on the operating unit changing the value of a parameter has been received.

[0030] According to the present invention, the electronic device reports to the user that an operation input changing the value of a parameter has been received by causing part of the housing different from the operating unit to vibrate by a vibration mode in accordance with the changed value of a parameter.

[0031] Further, the present invention provides an electronic device provided with an operating unit for receiving an operation input, a vibration generator for imparting vibration to the operating unit, and vibration control means for identifying a type of the operation input and causing vibration to be generated from the vibration generator by a vibration mode linked with the type of the operation input in the case of detecting that an operation input to the operating unit has been received, the vibration generator provided with a weight, a support member for supporting the weight so as to allow it to reciprocate and connected to the operating unit or a base member of the vibration generator in contact with the operating unit, and excitation generating means for imparting excitation for causing reciprocation to the weight. Further, the present invention provides a vibration-type reporting method in an electronic device comprising identifying a type of an operation input and driving a vibration generator provided in the electronic device in the case of detecting that an operation input to an operating unit has been received and having the vibration generator cause the operating unit to vibrate by causing reciprocation in a weight connected to the operating unit or a base member of the vibration generator in contact with the operating unit.

[0032] According to the present invention, the electronic device reports to the user that an operation input has been received by causing an operating unit to vibrate by a vibration mode in accordance with the type of the operation input.

[0033] Further, the present invention provides an electronic device provided with an operating unit for receiving an operation input, a vibration generator for imparting vibration to the operating unit, changing means for changing a value of a parameter for controlling the electronic device in accordance with operation input to the operating unit, and vibration control means for causing vibration to be generated from the vibration generator by a vibration mode linked with the value of a parameter changed by the changing means by the operation input in the case of detecting that an operation input on the operating unit for changing the value of a parameter has been received, the vibration generator provided with a weight, a support member for supporting the weight so as to allow it to reciprocate, and connected to the operating unit or a base member of the vibration generator, and excitation generating means for imparting excitation for causing the weight to reciprocate.

[0034] According to the present invention, the electronic device reports to the user that an operation input changing a value of a parameter has been received by causing an operating unit to vibrate by a vibration mode in accordance with the changed value of a parameter.

[0035] Further, the present invention provides an electronic device provided with an operating member for causing a value of a parameter for controlling the electronic device to change continuously, a vibration generator for imparting vibration to a user, changing means for changing the value of a parameter based on an amount of operation of the operating member, and vibration control means for causing vibration to be generated from the vibration generator by a vibration mode linked with a value of a parameter changed by the changing means by the operation in the case of detecting that an operation input of the operating member has been received.

[0036] According to the present invention, the electronic device reports to the user that operation of the operating member continuously changing the value of a parameter has been received by a vibration mode in accordance with the changed value of a parameter.

[0037] Further, the present invention provides an electronic device provided with an operating unit for receiving an operation input and detecting a level of pressure of the operation input, a vibration generator for imparting vibration to a user, and vibration control means for causing vibration to be generated from the vibration generator by a vibration mode linked with the level of pressure of the operation input detected by the operating unit in the case of detecting that an operation input to the operating unit has been received.

[0038] According to the present invention, the electronic device reports to the user that an operation input has been received by a vibration mode in accordance with the level of pressure of the operation input.

[0039] Further, the present invention provides an electronic device provided with an operating unit for receiving an operation input, sound producing means for imparting an audio report to a user, a vibration generator for imparting vibration to the user, and report control means for reporting to the user that an operation input has been received using at least one of the sound producing means and the vibration generator designated by the user in advance in the case of detecting that an operation input to the operating unit has been received. Further, the present invention provides a report control method in an electronic device comprising reporting to a user that an operation input has been received using at least one of sound producing means for imparting an audio report to the user and a vibration generator imparting vibration to the user designated by the user in advance in the case of detecting that an operation input to the operating unit has been received, the sound producing means and the vibration generator being provided in the electronic device.

[0040] According to the present invention, the electronic device reports to the user that an operation input has been received by vibration or sound designated by the user in advance.

[0041] Further, the present invention provides an electronic device provided with an operating unit for receiving an operation input, sound producing means for imparting an audio report to a user, a vibration generator for imparting vibration to the user, measuring means for measuring a sound level of surroundings of the electronic device, and report control means for selecting at least one of the sound producing means and the vibration generator based on measurement results of the measuring means and reporting to the user that an operation input has been received using the selected one in the case of detecting that an operation input to the operating unit has been received. Further, the present invention provides a report control method in an electronic device comprising selecting at least one of sound producing means for imparting an audio report to a user and a vibration generator for imparting vibration to the user, provided in the electronic device, based on the measurement results of measuring means for measuring the sound level of surroundings of the electronic device and reporting to the user that an operation input has been received using the selected one in the case of detecting that an operation input to the operating unit has been received.

[0042] According to the present invention, the electronic device reports to the user that an operation input has been received by vibration or sound in accordance with the sound level of surroundings of the electronic device.

[0043] Further, the present invention provides an electronic device provided with an operating unit for receiving an operation input, sound producing means for imparting an audio report to a user, a vibration generator for imparting vibration to the user, receiving means for receiving a signal designating at least one of the sound producing means or a vibration generator from a base station covering an area in which the electronic device is located, and report control means for reporting to the user that an operation input has been received using at least one of the sound producing means or the vibration generator designated by a signal received from the receiving means in the case of detecting that an operation input to the operating unit has been received. Further, the present invention provides a report control method in an electronic device comprising reporting to a user that an operation input has been received using at least one means designated by a signal received from a base station covering an area in which the electronic device is located from among sound producing means imparting an audio report to the user and vibration generator imparting vibration to the user, provided in the electronic device, in the case of detecting that an operation input to the operating unit is received.

[0044] According to the present invention, the electronic device reports to the user that an operation input has been received by vibration or sound in accordance with an instruction from a base station covering an area in which the electronic device is located.

[0045] Further, the present invention provides an electronic device provided with an operating unit for receiving an operation input, a vibration generator able to give vibration to a user and simultaneously cause the generation of sound, and drive control means for combining a drive signal for driving the vibration generator to cause generation of vibration and an audio signal for driving the vibration generator to cause generation of sound and applying the combined signal to the vibration generator in the case of causing generation of vibration and sound from the vibration generator in the case of detecting that an operation input to the operating unit has been received. Further, the present invention provides a vibration-type reporting method in an electronic device comprising combining a drive signal for driving the vibration generator to cause generation of vibration and an audio signal for driving the vibration generator to cause generation of sound and using the combined signal to drive the vibration generator to give vibration to a user and simultaneously cause the generation of sound in the case of causing generation of vibration and sound from a vibration generator provided in the electronic device in the case of detecting that an operation input to the operating unit has been received.

[0046] According to the present invention, the electronic device reports to the user that an operation input has been received by vibration using a vibration generator and causes sound, based on the audio signal, to be generated from the vibration generator.

[0047] Further, the present invention provides an electronic device provided with an operating unit for receiving an operation input, sound producing means for imparting an audio report to a user, a vibration generator for imparting vibration to the user, acquiring means for acquiring location information of the electronic device, and report control means for selecting at least one of the sound producing means and the vibration generator based on location information acquired by the acquiring means and using the selected means to report to the user that an operation input has been received in the case of detecting that an operation input to the operating unit has been received. Further, the present invention provides a report control method in an electronic device comprising selecting at least one of sound producing means for imparting an audio report to a user and a vibration generator for imparting vibration to the user, provided in the electronic device, based on location information of the electronic device and using the selected means to report to the user that an operation input has been received in the case of detecting that an operation input to the operating unit has been received According to the present invention, the electronic device reports to the user that an operation input has been received by vibration or sound in accordance with the current location of the electronic device.

[0048] Further, the present invention provides an electronic device provided with an operation panel for receiving a touch operation, a plurality of vibration generators for imparting vibration to the operation panel, detecting means for detecting a touched position on the operation panel, and vibration control means for selecting at least one of the plurality of vibration generators based on a touched position of the touch operation detected by the detecting means and causing generation of vibration from the selected vibration generator in the case of detecting that a touch operation to the operation panel has been received. Further, the present invention provides a vibration-type reporting method in an electronic device comprising detecting a touched position, selecting at least one of a plurality of vibration generators provided in the electronic device based on a touched posi-

tion, and causing generation of vibration from the selected vibration generator in the case of detecting that a touch operation to the operation panel has been received.

[0049] According to the present invention, the electronic device switches the vibration generators driven in accordance with a touched position in the case of reporting to the user by vibration that a touch operation has been received.

[0050] Further, the present invention provides an electronic device provided with an operation panel for receiving a touch operation, a plurality of vibration generators for imparting vibration to the operation panel, detecting means for detecting a touched position at the operation panel, generating means for generating drive signals for driving the plurality of vibration generators so that an amplitude of vibration caused at a touched position of the touch operation detected by the detecting means is increased due to mutual interference of oscillatory waves generated from the plurality of vibration generators in the case of detecting that a touch operation on the operation panel has been received, and vibration control means for applying drive signals generated by the generating means to the vibration generators to cause vibration to be generated from the vibration generators. Further, the present invention provides a vibration-type reporting method in an electronic device comprising detecting a touched position and generating drive signals for application to a plurality of vibration generators to drive the vibration generators to give vibration to the user so that an amplitude of vibration caused at a touched position of the operation panel is increased due to mutual interference of oscillatory waves generated from the plurality of vibration generators provided in the electronic device in the case of detecting that a touch operation to an operation panel has been received.

[0051] According to the present invention, the electronic device increases the amplitude of the vibration generated at a touched position on the operation panel by mutual interference of oscillatory waves generated from the vibration generators in the case of reporting to the user that a touch operation has been received by causing generation of vibration from the plurality of vibration generators.

[0052] Further, the present invention provides an electronic device provided with an operation panel over which a deformation layer able to deform by vibration is superposed, a plurality of vibration generators each imparting vibration to the operation panel, detecting means for detecting a touched position on the operation panel, generating means for generating drive signals for driving the plurality of vibration generators so that the thickness of the deformation layer at a touched position of the touch operation detected by the detecting means becomes thinner or thicker than that at the time of non-touching due to mutual interference of oscillatory waves generated from the plurality of vibration generators, and vibration control means for applying drive signals generated by the generating means to corresponding vibration generators and causing vibration to be generated from the vibration generators.

[0053] According to the present invention, the electronic device makes the thickness of a deformation layer of a touched position on the operation panel thinner or thicker than that at the time of non-touching by mutual interference of oscillatory waves generated from the vibration generators in the case of reporting to the user that a touch operation has been received by causing vibration to be generated from a plurality of vibration generators.

[0054] Further, the present invention provides a vibration generator provided with a weight, a support member for supporting the weight to be able to linearly reciprocate and connected to a vibratory member to which the vibration generator imparts vibration, or a base member of the vibration generator in contact with the vibratory member, excitation generating means for imparting excitation to cause reciprocation at the weight, and resistance imparting member for continually contacting a side surface parallel to a direction of reciprocation of the weight linearly reciprocating by excitation generated from the excitation generating means and imparting contact resistance to the weight.

[0055] According to the present invention, in the case that the generation of excitation from the excitation generating means stops, the reciprocation of the weight quickly stops due to contact resistance.

[0056] Further, the present invention provides a vibration generator provided with a weight, a support member for supporting the weight to be able to reciprocate and connected to a vibratory member given vibration by the vibration generator or a base member of the vibration generator in contact with the vibratory member, excitation generating means for imparting excitation for causing reciprocation to the weight, and brake means for contacting the weight and causing reciprocation of the weight to stop in the case that the generation of excitation from the excitation generating means has stopped.

[0057] According to the present invention, the brake means causes the reciprocation of the weight to immediately stop in the case that generation of excitation from the excitation generating means has stopped.

BRIEF DESCRIPTION OF THE DRAWINGS

[0058] **FIG. 1** is a perspective view illustrating the appearance of a PDA according to a first embodiment of the present invention.

[0059] **FIG. 2** is a block diagram illustrating a hardware configuration of a PDA according to the embodiment.

[0060] **FIG. 3** is a sectional view schematically illustrating a state of placement of an oscillatory actuator in the main case of the PDA according to this embodiment.

[0061] **FIG. 4** is a view illustrating a waveform of a drive signal applied to the oscillatory actuator according to this embodiment.

[0062] **FIG. 5** is a flow chart for explaining the operation of a vibration control processing **1** executed by a CPU in the PDA according to this embodiment.

[0063] **FIG. 6** is a block diagram illustrating the hardware configuration of a PDA according to a second embodiment of the present invention.

[0064] **FIG. 7** is a sectional view schematically illustrating a state of placement of a vibrator in the main case of the PDA according to this embodiment.

[0065] **FIG. 8** is a perspective view illustrating the appearance of a DC motor according to this embodiment.

[0066] **FIG. 9** is a view illustrating a waveform of a drive voltage applied to a vibrator according to this embodiment.

[0067] **FIG. 10** is a view illustrating vibration occurring at the front surface of a touch panel according to this embodiment.

[0068] **FIG. 11** is a flow chart for explaining the operation of a vibration control processing **2** executed by the CPU in a PDA according to this embodiment.

[0069] **FIG. 12** is a perspective view illustrating the appearance of a PDA according to a third embodiment of the present invention.

[0070] **FIG. 13** is a block diagram illustrating the hardware configuration of a PDA according to this embodiment.

[0071] **FIG. 14** is a flow chart for explaining the operation of a vibration control processing **3** executed by the CPU in a PDA according to this embodiment.

[0072] **FIG. 15** is a flow chart for explaining the operation of a vibration control processing **4** executed by the CPU in a PDA according to this embodiment.

[0073] **FIG. 16** is a view illustrating an internal structure of a PDA according to a fourth embodiment of the present invention.

[0074] **FIG. 17** is a block diagram illustrating the hardware configuration of a PDA according to this embodiment.

[0075] **FIG. 18** is a flow chart for explaining the operation of a vibration control processing **5** executed by the CPU in a PDA according to this embodiment.

[0076] **FIG. 19** is a view illustrating an internal structure of a PDA according to a first modification of this embodiment.

[0077] **FIG. 20** is a view of another example of placement of an elastic member according to this modification.

[0078] **FIG. 21** is a view of another example of placement of an elastic member according to this modification.

[0079] **FIG. 22** is a view of another example of placement of an elastic member according to this modification.

[0080] **FIG. 23** is a view illustrating an internal structure of a PDA according to a second modification of this embodiment.

[0081] **FIG. 24** is a view illustrating an internal structure of a PDA according to a third modification of this embodiment.

[0082] **FIG. 25** is a sectional view for explaining an internal structure of an ATM according to a fifth embodiment of the present invention.

[0083] **FIG. 26** is a sectional view of a modification of a position of placement of an oscillatory actuator according to this embodiment.

[0084] **FIG. 27** is a sectional view for explaining an internal structure of an ATM according to a first modification of this embodiment.

[0085] **FIG. 28** is a sectional view for explaining an internal structure of an ATM according to a second modification of this embodiment.

[0086] **FIG. 29** is a sectional view for explaining an internal structure of an ATM according to a third modification of this embodiment.

[0087] **FIG. 30** is a sectional view for explaining an internal structure of an ATM according to a fourth modification of this embodiment.

[0088] **FIG. 31** is a sectional view for explaining an internal structure of an ATM according to a fifth modification of this embodiment.

[0089] **FIG. 32** is a view of an example of the screen display of a PDA according to a first example of a sixth embodiment of the present invention.

[0090] **FIG. 33** is a view illustrating a waveform data table stored in a memory in a PDA according to the first example of this embodiment.

[0091] **FIG. 34** is a view illustrating a waveform of a drive signal applied to an oscillatory actuator in a PDA according to the first example of this embodiment.

[0092] **FIG. 35** is a view illustrating a waveform of a drive signal applied to an oscillatory actuator in a PDA according to the first example of this embodiment.

[0093] **FIG. 36** is a view illustrating a waveform of a drive signal applied to an oscillatory actuator in a PDA according to the first example of this embodiment.

[0094] **FIG. 37** is a view illustrating a waveform of a drive signal applied to an oscillatory actuator in a PDA according to the first example of this embodiment.

[0095] **FIG. 38** is a view of an example of the screen display of a PDA according to a second example of this embodiment.

[0096] **FIG. 39** is a view of an example of the screen display of a PDA according to the second example of this embodiment.

[0097] **FIG. 40** is a view illustrating a waveform data table stored in a memory in a PDA according to the second example of this embodiment.

[0098] **FIG. 41** is a view of an example of the screen display of a PDA according to a third example of this embodiment.

[0099] **FIG. 42** is a view illustrating a waveform data table stored in a memory in a PDA according to the third example of this embodiment.

[0100] **FIG. 43** is a view illustrating a waveform of a drive signal applied to an oscillatory actuator in a PDA according to the third example of this embodiment.

[0101] **FIG. 44** is a view illustrating a waveform of a drive signal applied to an oscillatory actuator in a PDA according to the third example of this embodiment.

[0102] **FIG. 45** is a view illustrating a waveform of a drive signal applied to an oscillatory actuator in a PDA according to the third example of this embodiment.

[0103] **FIG. 46** is a view illustrating a waveform data table stored in a memory in a PDA according to a seventh embodiment of the present invention.

[0104] **FIG. 47** is a block diagram illustrating the hardware configuration of a PDA according to an eighth embodiment of the present invention.

[0105] **FIG. 48** is a flow chart for explaining the operation of a report control processing **1** executed by the CPU in a PDA according to this embodiment.

[0106] **FIG. 49** is a view illustrating a waveform of a drive signal for vibration applied to an oscillatory actuator in a PDA according to this embodiment.

[0107] **FIG. 50** is a view illustrating a waveform of a drive signal for a beeping sound applied to an oscillatory actuator in a PDA according to this embodiment.

[0108] **FIG. 51** is a view illustrating a waveform of a drive signal applied to an oscillatory actuator when simultaneously report by vibration and a beeping sound in a PDA according to this embodiment.

[0109] **FIG. 52** is a block diagram illustrating a hardware configuration of a PDA according to a ninth embodiment of the present invention.

[0110] **FIG. 53** is a flow chart for explaining the operation of a beacon receiving processing executed by the CPU in a PDA according to this embodiment.

[0111] **FIG. 54** is a view illustrating a report mode decision table stored in a memory in a PDA according to a 10th embodiment of the present invention.

[0112] **FIG. 55** is a view for explaining an ATM according to an **11**th embodiment of the present invention.

[0113] **FIG. 56** is a block diagram illustrating the hardware configuration of an ATM according to this embodiment.

[0114] **FIG. 57** is part of a flow chart for explaining the operation of a vibration control processing **6** executed by the CPU in an ATM according to this embodiment.

[0115] **FIG. 58** is part of a flow chart for explaining the operation of a vibration control processing **6** executed by the CPU in an ATM according to this embodiment.

[0116] **FIG. 59** is a sectional view for explaining a touch panel of an ATM according to a modification of this embodiment.

[0117] **FIG. 60** is a sectional view for explaining a touch panel of an ATM according to a modification of this embodiment.

[0118] **FIG. 61** is a view for explaining an ATM according to a 12th embodiment of the present invention.

[0119] **FIG. 62** is a view illustrating a driving object decision table stored in a memory in an ATM according to this embodiment.

[0120] **FIG. 63** is a flow chart for explaining the operation of a vibration control processing **7** executed by the CPU in an ATM according to this embodiment.

[0121] **FIG. 64** is a sectional view illustrating an internal structure of an oscillatory actuator according to a first example of a 13th embodiment of the present invention.

[0122] **FIG. 65** is a plan view illustrating an example of placement of a brake member in an oscillatory actuator according to the first example of this embodiment.

[0123] **FIG. 66** is a plan view illustrating another example of placement of a brake member in an oscillatory actuator according to the first example of this embodiment.

[0124] **FIG. 67** is a plan view illustrating another example of placement of a brake member in an oscillatory actuator according to the first example of this embodiment.

[0125] **FIG. 68** is a view illustrating a waveform of a drive signal applied to a coil of an oscillatory actuator according to the first example of this embodiment.

[0126] **FIG. 69** is a view for explaining reciprocation of a movable weight of an oscillatory actuator without a brake mechanism.

[0127] **FIG. 70** is a view for explaining reciprocation of a movable weight of an oscillatory actuator according to the first example of this embodiment.

[0128] **FIG. 71** is a sectional view illustrating the internal structure of an oscillatory actuator according to a second example of this embodiment.

[0129] **FIG. 72** is a view illustrating a circuit configuration for applying a drive signal to a coil and a brake coil of an oscillatory actuator according to the second example of this embodiment.

[0130] **FIG. 73** is a view illustrating a waveform of a drive signal applied to a coil of an oscillatory actuator according to the second example of this embodiment.

[0131] **FIG. 74** is a view illustrating a waveform of a drive signal applied to a brake coil of an oscillatory actuator according to the second example of this embodiment.

[0132] **FIG. 75** is a sectional view illustrating the internal structure of an oscillatory actuator according to a third example of this embodiment.

[0133] **FIG. 76** is a view illustrating the circuit configuration for applying a drive signal to a coil of an oscillatory actuator according to the third example of this embodiment.

[0134] **FIG. 77** is a view illustrating a waveform of a CTRL signal supplied to a switch circuit according to the third example of this embodiment.

[0135] **FIG. 78** is a view illustrating an operation panel according to a third modification of the present invention.

[0136] **FIG. 79** is a view illustrating a dial type switch according to this modification.

[0137] **FIG. 80** is a view illustrating a "+" key and a "−" key according to this modification.

[0138] **FIG. 81** is a perspective view illustrating the appearance of a remote controller of an electronic device according to this modification.

[0139] **FIG. 82** is a view illustrating an electrostatic type oscillatory actuator according to a fifth modification of the present invention.

[0140] **FIG. 83** is a view for explaining another electrostatic type oscillatory actuator according to the fifth modification of the present invention.

[0141] **FIG. 84** is a view illustrating the internal structure of an oscillatory actuator according to a sixth modification of the present invention.

[0142] **FIG. 85** is a perspective view illustrating the appearance of an ATM according to an eighth embodiment of the present invention.

BEST MODE FOR CARRYING OUT THE INVENTION

[0143] Next, embodiments of the present invention will be explained. These embodiments show some aspects of the present invention. They do not limit the invention and can be changed as desired within the scope of the present invention.

[0144] [A: First Embodiment]

[0145] [A-1: Configuration of First Embodiment]

[0146] **FIG. 1** is a perspective view illustrating the appearance of a PDA **10** according to a first embodiment of the present invention. In the figure, a transparent touch panel **102** is overlaid on a display screen of a liquid crystal display panel **103***a* covering an opening of a main case **101**. A user inputs operation instructions to the PDA **10** by touching the touch panel **102** by his or her fingertip. Note that the touch operation on the touch panel **102** may also be of a mode using a pen or other operation tools. Further, the top surface of the main case **101** is provided with push-button type operation keys **104***a*, **104***b*, and **104***c* for inputting operation instructions to the PDA **101** such as for turning the main power on or off.

[0147] Next, **FIG. 2** is a block diagram illustrating the hardware configuration of the PDA **10** shown in **FIG. 1**. As shown in this figure, the PDA **10** has a touch panel **102**, a display unit **103**, a key input unit **111**, a memory **112**, a CPU (central processing unit) **113**, a drive signal generation circuit **114**, and an oscillatory actuator **115**.

[0148] The touch panel **102** outputs a signal showing a touched position on the touch panel **102** (hereinafter called a "touch signal") to the CPU **113** in response to a touch operation. Further, the display unit **103** has a liquid crystal display panel **103***a* and a drive circuit for controlling the display of the liquid crystal display panel **103***a*. The key input unit **111** outputs, to the CPU **113**, a key operation signal in response to the pressing operation of the operation keys **104***a* to **104***c* by the user. The memory **112** stores programs, data, etc. for controlling the PDA **10**. Further, the memory **112** stores waveform data of the drive signal for driving the oscillatory actuator **115**.

[0149] The CPU **113** executes a program stored in the memory **112** to control the parts of the device interconnected through a bus **116**. This CPU **113** executes a vibration control processing **1** (see **FIG. 5**). Upon detection of an operation input from the touch panel **102** or any one of operation keys **104***a* to **104***c*, it drives the oscillatory actuator **115** through the drive signal generation circuit **114** to cause the touch panel **102** or one of the operation keys **104***a* to **104***c* to vibrate.

[0150] The drive signal generation circuit **114** generates a drive signal for driving the oscillatory actuator **115** in accordance with waveform data supplied from the CPU **113**. Further, the drive signal generation circuit **114** applies a drive signal to the oscillatory actuator **115** in accordance with instructions from the CPU **113**.

[0151] The oscillatory actuator **115** is a linear oscillatory actuator of a so-called moving permanent magnet type which uses a permanent magnet as a movable weight (weight) and causes the movable weight to linearly reciprocate by electromagnetic force to cause generation of vibration. The oscillatory actuator **115** is driven by a drive signal applied from the drive signal generation circuit **114** and generates vibration.

[0152] **FIG. 3** is a sectional view schematically illustrating a state of placement of the oscillatory actuator **115** in the main case **101** of the PDA **10**. As shown in the figure, the top surface of the case **115***a* of the oscillatory actuator **115** is in contact with the liquid crystal display panel **103***a* and operation keys **104***a* to **104***c*. Further, the case **115***a* of the oscillatory actuator **115** is provided inside it with a cylindrical coil **121** fixed to the top surface of the case **115***a*, a columnar movable weight **122** made of permanent magnet and having an annular space in which the coil **121** fits, and a spring **123** for supporting the movable weight **122**.

[0153] Note that the case **115***a* of the oscillatory actuator **115** is sealed and functions as a magnetic shield. The function as such a magnetic shield is given to the case **115***a* by, for example, forming the case **115***a* by a conductive substance and grounding it or making it the same potential. Alternatively, the case **115***a* may be made of a magnetic member having a high-permeability.

[0154] The movable weight **122** is supported by the spring **123** in a state where the weight **122** is able to linearly reciprocate in the vertical direction in the figure in the space formed inside the case **115***a* of the oscillatory actuator **115**. The spring **123**, as shown in **FIG. 3**, is connected at one end to the case **115***a* (base member) that is in contact with the liquid crystal display panel **103***a* and operation keys **104***a* to **104***c* and is connected at its other end to the movable weight **122**. Note that a plurality of springs **123** may also be provided. Further, instead of the spring **123**, it is also possible to use a support member formed using an elastic body such as a rubber band.

[0155] The movable weight **122** linearly reciprocates in the vertical direction in the figure by the magnetic force generated from the coil **121** when an AC (alternating) current (drive signal) is applied to the coil **121**. By the counter force of the reciprocation of the movable weight **122**, vibrational acceleration occurs at the portion of the case **115***a* to which the spring **123** is connected. Note that the portion of the case **115***a* to which the spring **123** is connected receives a vibration component transmitted from the movable weight **122** through the spring **123** in addition to the counter force of the reciprocation along with the reciprocation of the movable weight **122**. The principle of generation of vibration by the oscillatory actuator **115** is however based on the use of the vibrational acceleration occurring by a counter force of the reciprocation of the movable weight **122**.

[0156] Due to this vibrational acceleration, vibration is transmitted to the liquid crystal display panel **103***a* and the operation keys **104***a* to **104***c*. The direction of the vibration is a direction perpendicular to the front surface of the touch panel **102** and matches with the direction by which the user

presses the touch panel **102** or any one of the operation keys **104***a* to **104***c* and its opposite direction. Due to this, the touch panel **102** and the operation keys **104***a* to **104***c* vibrate in a direction perpendicular to the front surface of the touch panel **102** and vibration is transmitted to the fingertip of the user performing the operation input.

[**0157**] Note that the oscillatory actuator **115** shown in **FIG. 3** is sealed by the case **115***a* having an anti-magnetic effect, but it is also possible that it not be sealed by this case **115***a*. Further, the spring **123** supporting the movable weight **112** may also be connected directly to the rear surface of the liquid crystal display panel **103** rather than to the case **115***a*.

[**0158**] Using an oscillatory actuator **115** integrally packaged in this way has the following advantages. That is, in the case of using an oscillatory actuator which is not integrally packaged, it is necessary to divide members of the oscillatory actuator into those to be placed at the rear surface of the liquid crystal display panel on which the touch panel is laid and those to be placed at the main body of the electronic device supporting the liquid crystal display panel. For example, it is necessary to place the permanent magnet at the rear surface of the liquid crystal display panel while placing the coil at a position facing the permanent magnet at the main body side of the electronic device.

[**0159**] In such a case, if the accuracy in mounting the divided members is low or deteriorates due to the aging, the vibration of the touch panel is immediately led to malfunction; and it becomes difficult to have the touch panel to vibrate with a stable degree of accuracy. Further, because the number of parts is large, and also because an alignment between the permanent magnet and the coil is required, the assembly work of the electronic device becomes complicated. As a result, the cost of the product turns out expensive correspondingly.

[**0160**] Further, in the case of placing the members of the oscillatory actuator separately as in the above, to enable efficient vibration of the touch panel, the support members of the electronic device supporting the liquid crystal display panel such as the main body and the case must be firmly fixed; alternatively, the mass of the support members have to be made sufficiently large compared with the liquid crystal display panel. Therefore, such a separate placement of the oscillatory actuator is not suitable for a light weight electronic device or portable electronic device.

[**0161**] As opposed to this, in the case of using an integrally packaged oscillatory actuator **115**, the movable weight **122** (permanent magnet) and the coil **121** are housed inside the case **115***a* in advance. Therefore, there is little possibility of causing the accuracy problem in mounting the permanent magnet and the coil. Further, compared with the separate placement, there is less probability of the mounting accuracy of the permanent magnet and the coil being deteriorated due to the aging. Thus, it is possible to cause the touch panel **102** to vibrate with a stable degree of accuracy. Further, it is sufficient to mount the integrally packaged oscillatory actuator **115** to a member desired to be caused to vibrate such as the rear surface of the liquid crystal display panel **103***a*. The process of the assembly work of the electronic device can therefore be simplified.

[**0162**] Further, the oscillatory actuator **115** gives the liquid crystal display panel **103***a* to which the movable weight **122** is connected the vibration occurring by a counter force of the reciprocation by causing reciprocation at the movable weight **122** supported in the air. Therefore, even when the support members of the PDA **10** such as the main body and the main case **101** are not firmly fixed or when the mass of the support member is not sufficiently large compared with the liquid crystal display panel **103***a*, the oscillatory actuator **115** can give a sufficiently large vibration to the liquid crystal display panel **103***a* etc. This is particularly suitable for use in a light weight electronic device or a portable electronic device.

[**0163**] Note that when an audio signal of audible band is applied to the coil **121** of the oscillatory actuator **115**, the case **115***a* of the oscillatory actuator **115** or the main case **101** of the PDA **10** at which the oscillatory actuator **115** is placed, for example, is caused to vibrate, thereby creating a sound in accordance with the audio signal. That is, it is also possible to use the oscillatory actuator **115** as a sound source. In this case, it is desirable to use the liquid crystal display panel **103***a* or the main case **101** etc., as a sound amplification mechanism, to which vibration generated by the oscillatory actuator **115** in accordance with application of the audio signal is transmitted, thereby increasing the volume of the sound generated at the oscillatory actuator **115**. If the oscillatory actuator **115** is used as both a vibration generator and a sound source in this way, it is possible to greatly reduce the space taken up by the components in compact electronic devices such as a mobile phone and a pager. In the case of using the oscillatory actuator **115** as a sound source, it is possible to provide sound amplification mechanism such as a paper cone or horn at the inside or outside of the oscillatory actuator **115**.

[**0164**] Next, **FIG. 4** is a view illustrating a waveform of a drive signal applied to the oscillatory actuator **115**. In the figure, the frequency f_0 of the drive signal applied to the coil **121** of the oscillatory actuator **115** is made to match with the natural frequency f_1 of the main case **101** of the PDA **10** or the natural frequency f_2 of the oscillatory actuator **115** itself. Applying a drive signal of such a frequency f_0 to the coil **121** causes the main case **101** or the oscillatory actuator **115** of the PDA **10** to resonate, thereby imparting larger vibration to the user using small drive power. That is, it is possible to reduce the power consumption of the PDA **10**. Such frequency data or amplitude data etc. is stored in the memory **112** as the waveform data of the drive signal.

[**0165**] Note that the frequency f_0 of the drive signal may also be set so that a frequency which is an integral multiple of the frequency f_0 corresponds to the natural frequency f_1 or natural frequency f_2. It is possible to cause the main case **101** or the oscillatory actuator **115** of the PDA **10** to resonate even with such a frequency f_0. Further, it should be understood that the waveform of the drive signal is not limited to the SIN wave illustrated in **FIG. 4** but may also be a square wave, trapezoidal wave, triangular wave, and the like.

[**0166**] [A-2: Operation of First Embodiment]

[**0167**] **FIG. 5** is a flow chart explaining the operation of a vibration control processing **1** executed by the CPU **113** in the PDA **10** according to this embodiment. The vibration control processing **1** is executed by the CPU **113** at every predetermined period in a period where an operation input to the touch panel **102** or the operation keys **104***a* to **104***c* is permitted.

[0168] As shown in the figure, first, the CPU **113** determines whether a touch signal has been input from the touch panel **102** and whether a key operation signal has been input from the key input unit **111** (step S**101**). When the CPU **113** determines that neither the touch signal nor key operation signal has been input, it ends the vibration control processing **1**. On the other hand, when the CPU **113** determines that at least one of the touch signal or key operation signal has been input, it first reads from the memory **112** the waveform data of the drive signal to be applied to the oscillatory actuator **115** (step S**102**).

[0169] Note that even when the CPU **113** determines that a touch signal has been input from the touch panel **102** at step S**101**, when it detects that a touched position of the touch panel **102** based on the signal falls outside the display areas of the touch buttons displayed on the display screen, the routine does not proceed to the processing of step S**102**, the vibration control processing **1** ends.

[0170] Next, the CPU **113** outputs the waveform data read from the memory **112** to the drive signal generation circuit **114**. At the same time, the CPU **113** instructs the drive signal generation circuit **114** to generate a drive signal (step S**103**). In response to the processing of step S**103**, the drive signal generation circuit **114** generates a drive signal using the waveform data supplied from the CPU **113**.

[0171] Next, the CPU **113** resets the count value for counting the time for the drive signal to be applied (step S**104**). Further, the CPU **113** instructs the drive signal generation circuit **114** to initiate applying the drive signal (step S**105**). At the same time, the CPU **113** starts counting the time for application (step S**106**). When instructed by the CPU **113** to start application, the drive signal generation circuit **114** applies the drive signal to the oscillatory actuator **115** for the period until the cessation of application is instructed by the CPU **113**. Due to this, the oscillatory actuator **115** is driven and causes the touch panel **102** and the operation keys **104***a* to **104***c* vibrate in a direction perpendicular to the front surface of the touch panel **102**.

[0172] Further, the CPU **113** increments the count value for counting the time of application in response to the start of counting of the time of application (step S**107**). Further, the CPU **113** determines whether the count has reached a count corresponding to a preset prescribed time (step S**108**). For example, in the present embodiment, the prescribed time is set to 0.5 second.

[0173] When the counted time of application is less than the prescribed time, the CPU **113** returns to step S**107** and increments the time of application. In the case that it is determined that the time of application has exceeded the prescribed time, that is, when the counted time of application has reached 0.5 second, the CPU **113** instructs the drive signal generation circuit **114** to stop the application of the drive signal (step S**109**). The CPU **113** then ends the vibration control processing **1**. When the cessation of application is instructed by the CPU **113**, the drive signal generation circuit **114** stops applying the drive signal to the oscillatory actuator **115**.

[0174] As explained above, according to the present embodiment, in the case of detecting an operation input to the touch panel **102** or any one of the operation keys **104***a* to **104***c*, the CPU **113** drives the oscillatory actuator **115** to cause the touch panel **102** or the operation keys **104***a* to **104***c* to vibrate. Therefore, the PDA **10** can report, to the user, that an operation input has been approved by way of vibration. As a result, the user can confirm if the operation input to the touch panel **102** or any one of the operation keys **104***a* to **104***c* has been approved by the PDA **10** without viewing the screen display.

[0175] Further, since a linear oscillatory actuator is used as the oscillatory actuator **115**, the directional accuracy of vibration generated from the oscillatory actuator **115** is high. Therefore, by building the oscillatory actuator **115** into the PDA **10** so that the direction of vibration becomes perpendicular to the front surface of the touch panel **102** or the direction of depression of the operation keys **104***a* to **104***c*, it is possible to give the user by vibrational stimulus the feeling of pressing the touch buttons or operation keys when touching the touch panel **102** or when depressing thin operation keys **104***a* to **104***c*.

[0176] Further, by applying an audible band audio signal to the coil **121** of the oscillatory actuator **115**, it is possible to use the oscillatory actuator **115** also as a sound source.

[0177] Further, the time of vibration may be set short such as 0.5 second. By doing this, when, for example, the touch panel **102** or any one of the operation keys **104***a* to **104***c* is operated, it is possible to give the user by vibrational stimulus a feeling of operation similar to that of a "click". Here, a "click" is the feeling of operation caused when pushing and releasing the button of a mouse when selecting an icon or button displayed on the screen of a display by operating the mouse. To give such a "click", the time of vibration is preferably not more than one second at the maximum. Further, by making the vibration time short, it is possible to reduce the drive power of the oscillatory actuator **115** and reduce the power consumption of the PDA **10**.

[0178] Further, the oscillatory actuator **115** houses the coil **121** and movable weight **122** inside the case **115***a* sealed to function as a magnetic shield. Therefore, the oscillatory actuator **115** is not affected by the magnetic force from the components of the PDA **10** provided around it. Further, the magnetic force generated from the coil **121** in the oscillatory actuator **115** does not affect the surrounding components.

[0179] It is important to prevent the oscillatory actuator **115** from being affected by the magnetic force from the surrounding components to maintain the constant accuracy of direction of the reciprocation of the movable weight **122**, that is, the accuracy of direction of the vibration generated from the oscillatory actuator **115**. The reason is that if the direction of vibration generated from the oscillatory actuator **115** deviates from the right direction due to the magnetic force from the surrounding components, it becomes impossible to give the user a feeling of pressing the touch buttons or operation keys by vibrational stimulus.

[0180] Further, prevention of the magnetic force of the oscillatory actuator **115** from affecting the surrounding components is important in preventing malfunctioning of the surrounding components. In the present embodiment, the explanation was given of the case where the liquid crystal display panel **103***a* is used. However, in the case of using a CRT (cathode ray tube) instead of the liquid crystal display panel **103***a* and placing near the CRT an oscillatory actuator not having an anti-magnetic effect for vibration of the touch

panel **102**, the display of the CRT may be distorted in color or form due to the magnetic force generated from the oscillatory actuator.

[**0181**] Note that in the present embodiment, the explanation was given with respect to a configuration causing vibration of the touch panel **102** or operation keys **104***a* to **104***c* or other operation units Under this configuration, vibration is conveyed to the fingertip of the user performing the operation input. However, conveying vibration to the hand of the user holding the PDA **10** rather than the fingertip performing the operation input is also possible by employing a configuration that causes vibration at the main case **101** of the PDA **10**.

[**0182**] [B: Second Embodiment]

[**0183**] In this embodiment, the explanation will be given of the case of employing a vibrator with a DC motor as a vibration generator. Note that in this embodiment, the same reference numerals are used for portions common with the first embodiment. Further, explanations of portions common with the first embodiment will be omitted.

[**0184**] [B-1: Configuration of Second Embodiment]

[**0185**] **FIG. 6** is a block diagram illustrating the hardware configuration of a PDA **20** according to this embodiment. As shown in the figure, the PDA **20** has a touch panel **102**, a display unit **103**, a key input unit **111**, a memory **112**, a CPU **113**, a drive signal generation circuit **211**, a vibrator **212**, and an encoder **213**.

[**0186**] The memory **112** stores waveform data of a drive voltage for driving the vibrator **212**. The CPU **113** executes a vibration control processing **2** (see **FIG. 11**). In the case of detecting operation input from the touch panel **102** or any one of the operation keys **104***a* to **104***c*, the CPU **113** drives the vibrator **212** through the drive signal generation circuit **211** to cause the touch panel **102** or one of the operation keys **104***a* to **104***c* to vibrate. Further, the CPU **113** determines the timing for stopping the application of the drive signal to the vibrator **212** on the basis of rotational angle information supplied from the encoder **213**.

[**0187**] The drive signal generation circuit **211** generates a drive signal for driving the vibrator **212** in accordance with the waveform data supplied from the CPU **113**. Further, the drive signal generation circuit **211** applies the drive signal to the vibrator **212** in accordance with an instruction from the CPU **113**. The vibrator **212** is a DC motor having an eccentric weight attached to its shaft. The vibrator **212** is driven by a drive signal applied from the drive signal generation circuit **211** and generates vibration.

[**0188**] **FIG. 7** is a sectional view schematically illustrating how the vibrator **212** is placed in the main case **101** of the PDA **20**. Further, **FIG. 8** is a perspective view illustrating the appearance of the vibrator **212**. As shown in **FIG. 7**, the vibrator **212** housed in a case **212***a* is placed at the bottom surface of the liquid crystal display panel **103***a*. This vibrator **212** is fixed inside the case **212***a* by a support member (not shown). Further, as shown in **FIG. 7** and **FIG. 8**, the vibrator **212** is configured by a DC motor **223** having an eccentric weight **222** attached to an end of a shaft **221**.

[**0189**] When a drive voltage (drive signal) is applied to the DC motor **223**, the eccentric weight **222** attached to the shaft **221** rotates, and the rotational movement of the eccentric weight **222** causes vibration at the case **212***a*. Note that when using the vibrator **212**, unlike the case of the oscillatory actuator **115** explained in the first embodiment, the direction or mode of vibration generated from the vibrator **212** varies depending on the initial position of the eccentric weight **222** or the rotational direction of the DC motor **223**. To cause the same vibration to be generated by the vibrator **212** every time, it is necessary to detect the position of the eccentric weight **222** and cause the eccentric weight **222** to rotate from the same position in the same direction at all times.

[**0190**] For this purpose, as shown in **FIG. 6**, the PDA **20** according to this embodiment is provided with the encoder **213**. This encoder **213** detects the rotational angle information of the DC motor **223** and outputs it to the CPU **113**. The CPU **113** determines the timing for stopping the application of the drive voltage to the DC motor **223** on the basis of the rotational angle information supplied from the encoder **213**. For example, in this embodiment, as shown in **FIG. 7**, the timing of cessation of application of the drive voltage to the DC motor **223** is determined so that the eccentric weight **222** stops at the position of exactly 12:00 when centered about the shaft **221**. Note that when using a stepping motor instead of the DC motor **223**, it is possible to detect the position of the eccentric weight attached to the shaft without using the encoder **213**.

[**0191**] As explained above, by controlling the stopping position of the eccentric shaft **222**, it is possible to make the direction of vibration generated from the vibrator **212** match the direction perpendicular to the front surface of the touch panel **102**. The vibration generated from the vibrator **212** is transmitted to the touch panel **102** through the liquid crystal display panel **103***a*. Due to this, the touch panel **102** vibrates in a direction perpendicular to its front surface and this vibration is transmitted to the fingertip of the user operating the touch panel **102**.

[**0192**] Next, **FIG. 9** is a view illustrating a waveform of a drive voltage applied to the vibrator **212**. **FIG. 10** is a view illustrating vibration occurring at the front surface of the touch panel **102**. In the case of the vibrator **212**, the rotational speed of the DC motor **223** changes in accordance with the drive voltage applied. Here, when the rotational speed of the DC motor **223** matches with the natural frequency f_1 of the main case **101** of the PDA **20** or the natural frequency f_3 of the vibrator **212**, the main case **101** of the PDA **20** or the vibrator **212** resonates.

[**0193**] Therefore, in the present embodiment, drive voltage is applied to the vibrator **212** so as to make the rotational speed of the DC motor **223** match with the natural frequency f_1 or natural frequency f_3. Therefore, as shown in **FIG. 10**, the touch panel **102** vibrates in a direction perpendicular to the front surface by a period of the natural frequency f_1 or natural frequency f_3. Due to this, it becomes possible to give a larger vibration by a small drive power and the power consumption of the PDA **20** can be reduced. Note that the waveform of the drive voltage is not limited to the square waveform illustrated in **FIG. 9**.

[**0194**] [B-2: Operation of Second Embodiment]

[**0195**] **FIG. 11** is a flow chart for explaining the operation of the vibration control processing **2**, in the PDA **20** according to this embodiment, the processing **2** being executed by

the CPU **113**. The vibration control processing **2** is executed by the CPU **113** at every predetermined period in a period during which operation input to the touch panel **102** or the operation keys **104***a* to **104***c* is permitted. Note that the processing shown in steps S**201** to S**208** of the second vibration control processing is similar to the processing of steps S**101** to S**108** of the vibration control processing **1** (see **FIG. 5**) explained in the first embodiment, so explanations thereof will be omitted.

[**0196**] In the present embodiment, however, since the vibrator **212** is used as a vibration generator, the drive signal generated in the drive signal generation circuit **211** becomes the drive voltage shown in **FIG. 9**. When this drive voltage is applied, the vibrator **212** causes the DC motor **223** to rotate at a rotational speed corresponding to the natural frequency f_1 of the main case **101** or the natural frequency f_3 of the vibrator **212**. As a consequence, the eccentric weight **222** rotates and causes vibration. The vibration generated by the vibrator **212** causes the touch panel **102** and the operation keys **104***a* to **104***c* to vibrate in a direction perpendicular to the front surface of the touch panel **102**.

[**0197**] In step S**208**, in the case that the CPU **113** determines that the time of application has exceeded a prescribed time, that is, when the time of application has reached 0.5 second, the CPU **113** proceeds to step S**209**. Next, the CPU **113** determines the timing for stopping the application of the drive voltage to cause the eccentric weight **222** to stop each time at the same position on the basis of the rotational angle information supplied from the encoder **213** (step S**209**). In the present embodiment, as shown in **FIG. 7**, the timing of cessation of application of the drive voltage is determined so that the eccentric weight **222** stops at the position of exactly 12:00 when centered on the shaft **221**.

[**0198**] Next, the CPU **113** instructs the drive signal generation circuit **221** to stop the application of the drive signal in accordance with the determined timing of cessation of application (step S**210**). The CPU **113** ends the vibration control processing. When instructed to stop the application by the CPU **113**, the drive signal generation circuit **221** stops the application of the drive signal to the vibrator **212**. As a result, the eccentric weight **222** attached to the DC motor **223** of the vibrator **212** stops at the same position each time. The eccentric weight **222** is made to stop at the same position at all times and weight to rotate from the same stopped position in the same direction in this way thereby enabling to fix the direction of vibration generated by the vibrator **212**. Further, the vibration generated by the vibrator **212** can be closely controlled. As explained above, according to the present embodiment, in the case of detecting operation input to the touch panel **102** or the any one of operation keys **104***a* to **104***c*, the CPU **113** drives the vibrator **212** to cause the touch panel **102** or one of the operation keys **104***a* to **104***c* to vibrate. Therefore, the PDA **20** can report to the user by vibration that an operation input has been approved.

[**0199**] Further, in the present embodiment, the eccentric weight **222** is made to stop at the same position at all times and rotation is started in the same direction from the stopped position. Due to this, it is possible to fix the direction of vibration generated by the vibrator **212** and to closely control the vibration generated by the vibrator **212**. As a result, the user is provided with a pressing feeling or a "click" feeling of the touch buttons or the operation keys by vibrational stimulus when a touching operation to the touch panel **102** or a pressing operation to the thin operation keys **104***a* to **104***c* is performed. Imparting this pressing feeling or "click" feeling requires control of the stopping position of the eccentric weight **222** explained above and was not possible with the conventional eccentric weight motor.

[**0200**] [C: Third Embodiment]

[**0201**] In this embodiment, description will be made on a portable electronic device which reports, upon completion of a processing designated by an operation input, the completion of processing. Note that in the present embodiment, the same reference numerals are used for portions common with the first embodiment. Further, explanations of portions common with the first embodiment will be omitted.

[**0202**] [C-1: Configuration of Third Embodiment]

[**0203**] **FIG. 12** is a perspective view illustrating the appearance of a PDA **30** according to this embodiment. In the figure, the PDA **30** is provided with a display screen of a liquid crystal display panel **302**a covering an opening of the main case **301**. Further, the top surface of the main case **301** is provided with a key input unit **303** having a plurality of push-button type operation keys.

[**0204**] **FIG. 13** is a block diagram illustrating the hardware configuration of the PDA **30** shown in **FIG. 12**. As shown in the figure, the PDA **30** has a display unit **302**, a key input unit **303**, a wireless communication unit **304**, a memory **112**, a CPU **113**, a drive signal generation circuit **114**, and an oscillatory actuator **115**.

[**0205**] The PDA **30** has the function for performing data communication with other communications devices through networks such as WAN (wide area network) and LAN (local area network). The wireless communication unit **304** controls wireless communication performed with a wireless base station of the WAN or LAN. Also, the CPU **113** executes the vibration control processing **3**(see **FIG. 14**) and, in the case of detecting the completion of a processing instructed by an operation input, drives the oscillatory actuator **115** through the drive signal generation circuit **114** to cause the main case **301** to vibrate.

[**0206**] Note that the oscillatory actuator **115** is the same as the oscillatory actuator **115** explained in the first embodiment. In the present embodiment, however, the oscillatory actuator **115** is attached to the back surface of the PDA **30**, that is, the inside of the main case **301** on the side opposite the back of the surface on which the display screen is provided, and causes the main case **301** to vibrate. Further, the vibration is transmitted to the hand of the user holding the PDA **30**.

[**0207**] [C-2: Operation of Third Embodiment]

[**0208**] **FIG. 14** is a flow chart for explaining the operation of a vibration control processing **3** executed by the CPU **113** in the PDA **30** according to this embodiment. The vibration control processing **3** is executed when the processing requiring a waiting time is instructed by operation input. Here, "processing requiring a waiting time" means, for example, file data downloading or uploading processing such as reading a web page, mail check processing for checking for e-mail addressed to oneself, start-up processing for starting up an application software, copying or deletion of file data,

initialization processing for initializing a data storage area of the memory **112**, and the like.

[**0209**] As shown in the figure, first, the CPU **113** executes the processing instructed by operation input (step S**301**). Next, the CPU **113** determines whether the processing being executed has been completed (step S**302**). When the processing has not ended, the CPU **113** returns to step S**301** and continues to execute the processing. In the case that the CPU **113** determines in step S**302** that the processing being executed has been completed, the CPU **113** proceeds to step S**303**. The processing from step S**303** is similar to the processing from step S**102** of the vibration control processing **1** (see **FIG. 5**) explained in the first embodiment, so explanations thereof will be omitted.

[**0210**] By configuring control in this way, in the case of detecting that the processing instructed by the operation input has finished, the CPU **113** drives the oscillatory actuator **115** through the drive signal generation circuit **114** to cause the main case **301** of the PDA **30** to vibrate. As a result, the vibration is transmitted to the hand of the user holding the PDA **30**.

[**0211**] When reporting the completion of, for example, the mail check processing by vibration, it is effective to make the mode of vibration different depending on the presence or absence of e-mail addressed to oneself. Description will be given below on the control method for changing the mode of vibration in accordance with the result of the processing executed.

[**0212**] **FIG. 15** is a flow chart for explaining the operation of a vibration control processing **4** executed by the CPU **113** in the PDA **30** according to this embodiment. As shown in the figure, first, the CPU **113** executes the processing instructed by the operation input (step S**4301**). Next, when determining that the processing being executed has ended (step S**402**), the CPU **113** proceeds to step S**403**.

[**0213**] Next, the CPU **113** acquires the result of execution of the processing executed at step S**401** (step S**403**). The CPU **113** changes the time of application of the drive signal, that is, the count value of the prescribed time specifying the time of application, in accordance with the results of execution (step S**404**). For example, when mail check processing has been executed, the CPU **113** leaves the prescribed time as 0.5 second when the result of the check is that there is no e-mail addressed to itself. Further, it changes the prescribed time to 1.5 seconds when there is e-mail addressed to itself.

[**0214**] Note that the processing from step S**405** is similar to the processing from step S**303** of the vibration control processing **3** (see **FIG. 14**), so a detailed explanation will be omitted, but the CPU **113** changes the time of vibration of the main case **301** according to the results of execution of the processing.

[**0215**] As explained above, according to the present embodiment, in the case of detecting that processing instructed by operation input has ended, the CPU **113** drives the oscillatory actuator **115** to cause the main case **301** of the PDA **30** to vibrate. Therefore, the PDA **30** can report to the user the completion of processing instructed by operation input by vibration. Further, according to the present embodiment, the CPU **113** changes the time of vibration of the oscillatory actuator **115** in accordance with the results of execution of the processing. Therefore, the user can confirm the results of execution of the instructed processing on the basis of vibration time even without viewing the screen information.

[**0216**] Note that in the present embodiment, the explanation was given of the case of changing the time of vibration in accordance with the results of execution of the processing, but it is also possible to change the magnitude of the vibration, the number of vibrations, etc. The point is to change the mode of vibration generated from the oscillatory actuator **115** in accordance with the results of execution of the processing. Further, in the present embodiment, the entire main case **301** of the PDA **30** was made to vibrate. It is however also possible to make only the portion of the main case **301** held by the user when holding the PDA **30** vibrate.

[**0217**] Further, in the present embodiment, an explanation was given of a configuration causing the main case **301** of the PDA **30** to vibrate, in which case, vibration is transmitted to the hand holding the PDA **30**. A configuration making a plurality of operation keys provided in the PDA **30** vibrate is also possible; that is, vibration is transmitted to the fingertip making the operation input.

[**0218**] [D: Fourth Embodiment]

[**0219**] In this embodiment, description will made on a portable electronic device switching the location where vibration is caused to a touch panel or hand-touched portion of a housing in accordance with whether the portable electronic device is being held by a user. Note that in the present embodiment, the same reference numerals are used for portions common with the first embodiment. Further, explanations of portions common with the first embodiment will be omitted.

[**0220**] [D-1: Configuration of Fourth Embodiment]

[**0221**] **FIG. 16** is a view illustrating an internal structure of a PDA **40** according to this embodiment. In the figure, the PDA **40** has a liquid crystal display panel **103***a* over which a touch panel **102** is laid. The display screen of the liquid crystal display panel **103***a* covers the opening of the main case **401**. Further, the rear surface of the liquid crystal display panel **103***a* is provided with an oscillatory actuator **115***a*. This oscillatory actuator **115***a* causes the touch panel **102** to vibrate to transmit vibration to the fingertip of the user performing the operation input.

[**0222**] On the other hand, at the inside of the main case **401** at the back surface side of the PDA **40**, that is, the side opposite to the surface where the display screen is provided, an oscillatory actuator **115***b* is provided. This oscillatory actuator **115***b* gives vibration to the palm of the hand of the user holding the PDA **40** through the main case **401**. Note that the oscillatory actuators **115***a* and **115***b* are the same as the oscillatory actuator **115** explained in the first embodiment. Further, a push-button type operation key **104***a* for inputting an on/off operation of the main power is provided at the side surface of the main case **401**.

[**0223**] In this way, the PDA **40** has two oscillatory actuators **115***a* and **115***b*. Further, while not shown in **FIG. 16**, the PDA **40** has a touch sensor and drives one of the oscillatory actuators to generate vibration in accordance with whether the PDA **40** is being held by the user. The reason for this control is to prevent, when the main case **401** of a PDA **40**

placed on a desktop is vibrated, the PDA **40** from moving due to this vibration or striking the desk at the time of vibration and therefore causing an unpleasant buzzing sound.

[**0224**] Note that in the present embodiment, as an example of control, an explanation will be given of the case of driving only the oscillatory actuator **115***b* and imparting vibration to the palm of the hand of the user holding the PDA **40** when the PDA **40** is being held by the user, while driving only the oscillatory actuator **115***a* and transmitting vibration to the fingertip performing the touch operation when the PDA **40** is not being held by the user. When the PDA **40** is being held by the user, however, it is also possible to drive both the oscillatory actuators **115***a* and **115***b* to perform report by vibration.

[**0225**] **FIG. 17** is a block diagram illustrating the hardware configuration of the PDA **40** shown in **FIG. 16**. As shown in the figure, the PDA **40** has a touch panel **102**, a display unit **103**, a key input unit **111**, a memory **112**, a CPU **113**, a drive signal generation circuit **114**, oscillatory actuators **115***a* and **115***b*, and a touch sensor **411**.

[**0226**] The touch sensor **411** is a sensor for detecting if the PDA **40** is being held by a user and supplies the results of detection to the CPU **113**.

[**0227**] The memory **112** stores waveform data of the drive signals to be applied to the oscillatory actuators **115***a* and **115***b*. Here, the frequency of the drive signal applied to the oscillatory actuator **115***a* corresponds to the frequency for causing the liquid crystal display panel **103** provided with the touch panel **102** to resonate or the frequency for causing the oscillatory actuator **115***a* itself to resonate. Further, the frequency of the drive signal applied to the oscillatory actuator **115***b* corresponds to the frequency for causing the main case **401** of the PDA **40** to resonate or the frequency for causing the oscillatory actuator **115***b* itself to resonate.

[**0228**] The CPU **113** executes a vibration control processing **5** (see **FIG. 18**) and reports to the user by vibration that a touch operation on the touch panel **102** has been received. In the present embodiment, however, the CPU **113** drives only one of the two oscillatory actuators **115***a* and **115***b* to generate vibration in accordance with the results of detection of the touch sensor **411**.

[**0229**] The drive signal generation circuit **114** generates drive signals for driving the oscillatory actuators **115***a* and **115***b* in accordance with waveform data supplied from the CPU **113**. Further, the drive signal generation circuit **114** applies drive signals to the oscillatory actuators **115***a* and **115***b* in accordance with instructions from the CPU **113**.

[**0230**] [D-2: Operation of Fourth Embodiment]

[**0231**] **FIG. 18** is a flow chart for explaining the operation of the vibration control processing **5** executed by the CPU **113** in the PDA **40** according to this embodiment. The vibration control processing **5** is executed by the CPU **113** every predetermined period in the period where a touch operation on the touch panel **102** is permitted.

[**0232**] As shown in the figure, first, the CPU **113** determines whether a touch signal has been input from the touch panel **102** (step S**501**). When it is determined that a touch signal has not been input, the CPU **113** ends the vibration control processing **5**. Note that even when the CPU **113** determines that a touch signal has been input from the touch panel **102**, when it detects that a touched position of the touch panel **102** based on the signal is outside of the display areas of the touch buttons displayed on the display screen, the routine does not proceed to the processing of step S**502** and the vibration control processing **5**.

[**0233**] On the other hand, when it is determined that a touch signal has been input at step S**501**, the CPU **113** next determines whether the PDA **40** is being held by the user based on the results of detection of the touch sensor **411** (step S**502**). Further, when it is determined that the PDA **40** is being held by the user, the CPU **113** determines the oscillatory actuator **115***b* as the oscillatory actuator to be driven (step S**503**). That is, when the PDA **40** is being held by the user, the handheld portion of the main case **401** is made to vibrate to transmit vibration to the palm of the hand of the user holding the PDA **40**.

[**0234**] On the other hand, when it is determined that at step S**502** that the PDA **40** is not being held by the user, the CPU **113** determines the oscillatory actuator **115***a* as the oscillatory actuator to be driven (step S**504**). That is, when the PDA **40** is not being held by the user, the touch panel **102** is made to vibrate to transmit vibration to the fingertip of the user performing the touch operation.

[**0235**] Note that the processing from step S**505** is similar to the processing in step S**102** and the following steps of the vibration control processing **1** explained in the first embodiment (see **FIG. 5**), so a detailed explanation will be omitted; but in this embodiment the CPU **113** drives the oscillatory actuator determined by the processing of step S**503** or S**504** to give vibration to the touch panel **102** or the handheld portion of the main case **401**.

[**0236**] As explained above, according to the present invention, the CPU **113** drives one of the oscillatory actuators to cause the generation of vibration in accordance with results of detection of the touch sensor **411**. Therefore, in the PDA **40**, the location of vibration can be switched to the touch panel **102** or the handheld portion of the main case **401** depending on whether the PDA **40** is being held by the user.

[**0237**] Note that in this embodiment, the oscillatory actuator used for a report by vibration may also be designated by the user. In this case, the CPU **113** gives a screen display for prompting the user to designate one or more oscillatory actuators for use when performing report by vibration. When the oscillatory actuator to be used is designated by operation input by the user, the CPU **113** stores that designation information in the memory **112**. Further, after it is determined that a touch signal has been input from the touch panel **102** at step S**501**, the CPU **113** determines the oscillatory actuator to be driven in accordance with the designation information stored in the memory **112**.

[**0238**] Further, **FIG. 19** is a section view illustrating an internal structure of the PDA **41** according to a modification of this embodiment. In this figure, a liquid crystal display panel **103***a* having the touch panel **102** placed over the display surface and having the oscillatory actuator **115***a* placed over its rear surface is attached to the main case **401** of the PDA **41** through an elastic member **451**. This elastic member **451** is for example rubber, urethane, sponge, etc. and, as shown in **FIG. 20**, is attached to the periphery of the liquid crystal display panel **103***a*. This elastic member **451**

is a member for causing the touch panel **102** and the liquid crystal display panel **103***a* to efficiently vibrate.

[**0239**] Note that the elastic member **451**, as shown in **FIG. 21** and **FIG. 22**, may also be placed in a plurality of pieces at the periphery of the liquid crystal display panel **103***a*. Further, the elastic member **451** may also be configured using a spring and the like. The touch panel **102** and the liquid crystal display panel **103***a* are attached to the main case **401** through the elastic members **451**, **451***a* to **451***f* shown in **FIG. 20** to **FIG. 22**, thereby enabling the effective transmission of the vibration generated by the oscillatory actuators **115***a* and **115***b* to the touch panel **102** and the liquid crystal display panel **103***a*. In other words, it is possible to give a larger vibration to the user while keeping down the drive power of the oscillatory actuator **115***a*.

[**0240**] Further, as shown in **FIG. 23**, it is also possible to place the oscillatory actuator **115***c* in contact with both the rear surface of the liquid crystal display panel over which the touch panel **102** is laid and the inside of the main case **401** at the back surface side of the PDA **42**. When configured in this way, it is possible to transmit the same vibration to the fingertip making the touch operation on the touch panel **102** and the hand holding the PDA **42**.

[**0241**] Further, as shown in **FIG. 24**, the oscillatory actuator **115***b* may be placed partially exposed from the opening provided in the main case **401***a* and to give vibration directly to the palm of the hand of the user holding the PDA **43**. Even in the case of this configuration, it is possible to efficiently transmit the vibration generated by the oscillatory actuator **115** to the user. In this case, since the oscillatory actuator **115***b* can directly give vibration to the user, vibration can be closely controlled.

[**0242**] [E: Fifth Embodiment]

[**0243**] In this embodiment, description will be made on a place of installation of the vibration generator for causing the touch panel to vibrate.

[**0244**] **FIG. 25** is a sectional view for explaining the internal structure of an ATM **50** according to the present invention. In this figure, a liquid crystal display panel **501** is placed at an incline on the front surface of the main body **50***a* of the ATM **50**. A touch panel **502** is attached to the display surface of the liquid crystal display panel **501** through a damper **503**. This touch panel **502** is provided with two oscillatory actuators **115***a* and **115***b* above and below the touch surface. Further, a main cover **504** having an opening is provided further outside from the touch panel **502**.

[**0245**] Here, the touch panel **502** is configured by a transparent, hard member such as a glass plate. Further, the damper **503** is a vibration absorbing member made of rubber, urethane, sponge, and the like, and attached to the periphery of the touch panel **502**. The damper **503** absorbs the vibration component transferred to the liquid crystal display panel **501** out of the vibration generated by the oscillatory actuators **115***a* and **115***b* placed on the touch panel **502** and prevents the vibration from being transmitted to the liquid crystal display panel **501**. Further, the damper **503** performs the role of causing the touch panel **502** placed on the liquid crystal display panel **501** to efficiently vibrate. Therefore, the damper **503** is preferably configured by an elastic body such as rubber.

[**0246**] The oscillatory actuators **115***a* and **115***b* are the same as the oscillatory actuator **115** explained in the first embodiment. Further, the damper **503** and the oscillatory actuators **115***a* and **115***b* are provided at the outside of the display screen area of the liquid crystal display panel **501**.

[**0247**] As shown in the figure, the liquid crystal display panel **501** is fixed to the main body **50***a* of the ATM **50**. As opposed to this, the touch panel **502** is attached to the liquid crystal display panel **501** through only the damper **503**. A clearance is provided between the touch panel **502** and the main cover **504**. Therefore, the touch panel **502** vibrates in a direction perpendicular to the front surface of the touch panel **502** due to the vibration generated by the oscillatory actuators **115***a* and **115***b*.

[**0248**] Note that for the control for causing generation of vibration from the oscillatory actuators **115***a* and **115***b* in response to a touch operation on the touch panel **502**, control may be performed in the same way as the vibration control processing **1** explained in the first embodiment (see **FIG. 5**) except for that the oscillatory actuators **115***a* and **115***b* are plural; so an explanation thereof will be omitted. Further, in the present embodiment, the frequencies of the drive signals applied to the oscillatory actuators **115***a* and **115***b* are set to frequencies for causing the touch panel **502** to resonate or frequencies for causing the oscillatory actuators **115***a* and **115***b* themselves to resonate.

[**0249**] As explained above, according to this embodiment, the ATM **50** can make only the touch panel **502** vibrate by vibration generated from the oscillatory actuators **115***a* and **115***b*. The vibration to the liquid crystal display panel **501** is absorbed by the damper **503**. Therefore, the content of the screen display of the liquid crystal display panel **501** does not flicker, so the displayed content is easy to view compared with a case causing the liquid crystal display panel and the touch panel to vibrate as in the first embodiment.

[**0250**] Note that as shown in **FIG. 26**, it is also possible to place the oscillatory actuators **115***a* and **115***b* at the liquid crystal display panel **501** side of the touch panel **502**. Further, **FIG. 27** is a sectional view for explaining an internal structure of an ATM **51** according to a modification of this embodiment. In the figure, the touch panel **502** is attached through two oscillatory actuators **115***a* and **115***b* to the display surface of the liquid crystal display panel **501** placed at an incline on the front surface side of the main body **50***a* of the ATM **51**.

[**0251**] Here, the liquid crystal display panel **501** is fixed to the main body **50***a* of the ATM **51**. As opposed to this, the touch panel **502** is attached to the liquid crystal display panel **501** through only the oscillatory actuators **115***a* and **115***b*. A clearance is provided between the touch panel **502** and the main cover **504**. Therefore, the touch panel **502** vibrates in a direction perpendicular to the front surface of the touch panel **502** by the vibration generated by the oscillatory actuators **115***a* and **115***b*. Further, since the liquid crystal display panel **501** is fixed to the main body **50***a*, it does not vibrate much at all even though it contacts the oscillatory actuators **115***a* and **115***b*. Therefore, the structure shown in **FIG. 27** enables similar effects to be obtained as in the case of the structure shown in **FIG. 25**.

[**0252**] Further, **FIG. 28** to **FIG. 31** are sectional views illustrating internal structures of ATMs **52**, **53**, **54**, and **55**

according to other modifications of this embodiment. First, as shown in **FIG. 28**, it is possible to attach a liquid crystal display panel **501** to the main cover **504** through a damper **503**, the liquid crystal display panel having the touch panel **502** laid over its display surface and having oscillatory actuators **115***a* and **115***b* placed at its rear surface. In this case, a clearance is provided between the liquid crystal display panel **501** and main body **50***a* of the ATM **52**. By adopting this configuration, it is possible to cause the touch panel **502** to vibrate in a direction perpendicular to its front surface by the vibration generated by the oscillatory actuators **115***a* and **115***b*. Note that the damper **503** in this modification performs the function of causing the touch panel **502** and liquid crystal display panel **501** to efficiently vibrate.

[**0253**] Further, as shown in **FIG. 29**, it is also possible to attach the liquid crystal display panel **501** having the touch panel **502** laid on its display surface to the main cover **504** through the oscillatory actuators **115***a* and **115***b*. In this case as well, a clearance is provided between the liquid crystal display panel **501** and the main body **50***a* of the ATM **53**. In this configuration as well, in the same way as in the case shown in **FIG. 28**, it is possible to cause the touch panel **502** to vibrate by the vibration generated by the oscillatory actuators **115***a* and **115***b*.

[**0254**] Alternatively, as shown in **FIG. 30**, it is also possible to attach the liquid crystal display panel **501** to the main body **50***a* of the ATM **54** through the damper **503**, the liquid crystal display panel **501** having the touch panel **502** laid on its display surface and having the oscillatory actuators **115***a* and **115***b* placed at its rear surface. In this case, a clearance is provided between the liquid crystal display panel **501** and the main cover **504**. In this configuration as well, it is possible to cause the touch panel **502** to vibrate in a direction perpendicular to its front surface by vibration generated by the oscillatory actuators **115***a* and **115***b*.

[**0255**] Further, as shown in **FIG. 31**, it is also possible to attach the liquid crystal display panel **501** having the touch panel **502** laid on its display surface to the main body **50***a* of the ATM **55** through the oscillatory actuators **115***a* and **115***b*. In this case as well, a clearance is provided between the liquid crystal display panel **501** and the main cover **504**. By this configuration as well, in the same way as the case shown in **FIG. 30**, it is possible to cause the touch panel **502** to vibrate by the vibration generated by the oscillatory actuators **115***a* and **115***b*.

[**0256**] All of the modifications shown in **FIG. 28** to **FIG. 31** cause the touch panel **502** to vibrate together with the liquid crystal display panel **501**, but ATMs **52** to **55** can report to the fingertip of the user performing the touch operation by vibration that a touch operation to the touch panel **502** has been received.

[**0257**] Note that in this embodiment, the explanation was made of the case of employing a liquid crystal display as the display. The display, however, may also be a CRT, plasma display, or an EL (electronic luminescence) display, etc. Further, the number of the oscillatory actuators **115***a* and **115***b* may be any number. Further, the damper **503** may also be configured using a spring and the like.

[**0258**] [F: Sixth Embodiment]

[**0259**] In the present embodiment, description will be given on an electronic device reporting that an operation input has been received to the user by vibration of a mode that differs according to the type of the operation input. Note that in this embodiment, the explanation will be made based on the PDA **10** explained in the first embodiment. Therefore, the same reference numerals are used for portions common with the first embodiment. Further, explanations of portions common with the first embodiment will be omitted.

[**0260**] [F-1: First Example]

[**0261**] **FIG. 32** is a view of an example of the screen display of the PDA **10** according to a first example of present embodiment. As shown in the figure, the display screen of the PDA **10** shows a plurality of touch buttons "A" to "G". The touch panel **102** overlaid on the display screen detects a touch operation when a user touches a displayed touch button by his or her fingertip. Note that the letters assigned to the touch buttons are only given for identifying the touch buttons.

[**0262**] Next, **FIG. 33** is a view illustrating a waveform data table **112***a* stored in the memory **112** in the PDA **10**. As shown in the figure, the waveform data table **112***a* stores, for each touch button displayed on the screen, area data showing the area occupied by a touch button on the touch panel **102** using XY coordinates as well as waveform data of the drive signal to be applied to the oscillatory actuator **115** when that touch button is pressed.

[**0263**] Here, the waveform of the drive signal linked with each touch button differs in amplitude or shape as illustrated in **FIG. 34** to **FIG. 37**. In these figures, the frequency f_0 of the drive signal is a frequency causing any one of the main case **101** of the PDA **10**, the liquid crystal display panel **103***a* provided with the touch panel **102**, and the oscillatory actuator **115** to resonate. The above-mentioned waveform data table **112***a* stores the frequency data, amplitude data, and the like required for generating these drive signals as the waveform data.

[**0264**] When a user touches the touch panel **102** of the PDA **10** having this configuration with his or her fingertip, the touch panel **102** detects that touch operation and outputs a touch signal to the CPU **113**. The CPU **113** finds the XY coordinate data of a touched position based on the touch signal, refers to the waveform data table **112***a*, and identifies the pressed touch button. Next, the CPU **113** reads from the waveform data table **112***a* the waveform data of the drive signal linked with the identified touch button.

[**0265**] Subsequently, the CPU **113** outputs the read waveform data to the drive signal generation circuit **114**. At the same time, the CPU **113** instructs the generation of the drive signal to the drive signal generation circuit **114**. The rest of the processing is similar to the processing in step S**103** and the following steps of the vibration control processing **1** explained in the first embodiment (see **FIG. 5**), so an explanation thereof will be omitted.

[**0266**] As explained above, according to the first example of this embodiment, in the case of detecting a touch operation on the touch panel **102**, the CPU **113** first detects a touched position and identifies the operated touch button. The CPU **113** then causes vibration to be generated from the oscillatory actuator **115** by a vibration mode linked with the type of the touch button. Therefore, the PDA **10** can change the mode of vibration reporting that a touch operation has been approved in accordance with the operated touch button.

[0267] Note that when a location on the touch panel **102** not corresponding to any touch button is pushed by the user, vibration showing that the touch operation was invalid may also be generated from the oscillatory actuator **115**. Further, it is also possible to change the vibration mode such as changing the vibration time, the number of vibrations, or the like.

[0268] Further, the invention according to the first example of the present embodiment can also be applied to an electronic device having a plurality of operation keys instead of the touch panel **102**. In this case, the memory stores the waveform data for each operation key. Further, in the case of detecting that an operation key has been operated, the operating unit of the electronic device reads out the waveform data for the operated key from the memory to drive the vibration generator. By adopting this configuration, it is possible to change the mode of vibration for reporting that a key operation has been received at the electronic device in accordance with the operated key.

[0269] [F-2: Second Example]

[0270] **FIG. 38** and **FIG. 39** are views illustrating the state where a user is dragging an icon displayed on the display screen of the PDA **10** by a touch operation on the touch panel **102** to transfer it to the "trash". Note that the "trash" spoken of here is an icon for instructing deletion of data.

[0271] First, when a user selects the icon desired to be dragged by the touch operation on the touch panel **102**, the CPU **113** of the PDA **10** detects the touched position and identifies the touch operation as an instruction for the selection of the icon. The memory **112** of the PDA **10** stores the waveform data table **112***b*, as shown in **FIG. 40**, storing the waveform data of the drive signal to be applied to the oscillatory actuator **115** for each type of instruction designated by an operation input.

[0272] The CPU **113** reads the waveform data linked with "SELECT ICON" from the waveform data table **112***b* and drives the oscillatory actuator **115**. As a result, the fingertip of the user performing the touch operation or the hand of the user holding the PDA **10** is given vibration indicating that the icon is selected.

[0273] Further, as shown in **FIG. 38**, when the user moves his or her fingertip while in contact with the touch panel **102** to drag the selected icon, the CPU **113** identifies the touch operation as an instruction for the dragging of the icon. Therefore, the CPU **113** reads the waveform data linked with "DRAG" from the waveform data table **112***b* and drives the oscillatory actuator **115**. Due to this, vibration showing that a drag operation is under way is transmitted to the user. For example, when a drag operation is under way, it is preferable to continuously give a weak vibration.

[0274] Further, as shown in **FIG. 39**, when the dragged icon is superposed over the trash, the CPU **113** identifies the touch operation as instruction for the placement of the icon in the trash. Therefore, while the CPU **113** stores the icon in the trash, it reads the waveform data linked with "DELETE DATA" from the waveform data table **112***b* and drives the oscillatory actuator **115**. As a result, the user performing the touch operation is given vibration indicating deletion of the icon.

[0275] As explained above, according to the second example of this embodiment, in the case of detecting a touch operation on the touch panel **102**, the CPU **113** first identifies the type of the instruction designated by the touch operation. Further, the CPU **113** causes the oscillatory actuator **115** to generate vibration by a mode of vibration linked with the type of the identified instruction. Thus, the PDA **10** can change the mode of vibration for reporting that the touch operation has been received in accordance with the type of instruction designated by the touch operation.

[0276] [F-3: Third Example]

[0277] **FIG. 41** is a view of an example of the screen display of a PDA **10** according to a third example of this embodiment. As shown in the figure, the display screen of the PDA **10** displays a "scale" and "knob" for adjusting the value of a parameter such as the level of sound of the PDA **10** or the brightness of the screen. The user can drag and change the position of the "knob" displayed on the screen by a touch operation on the touch panel **102**.

[0278] First, when the user clicks on the "knob" by a touch operation on the touch panel **102**, the CPU **113** of the PDA **10** recognizes that the "knob" has been clicked. Further, the CPU **113** gives the user vibration showing that the "knob" has been clicked.

[0279] Next, when the user moves his or her fingertip while in contact with the touch panel **102** and drags the "knob" along the "scale", the CPU **113** recognizes that the "knob" is being dragged. Here, the memory **112** of the PDA **10** according to the third example of this embodiment stores the waveform data table **112***c* shown in **FIG. 42**. This waveform data table **112***c* divides the range of values which the parameter can take into several sections and stores waveform data of the drive signal to be applied to the oscillatory actuator **115** for each section.

[0280] The CPU **113** obtains the value of the parameter in accordance with the position of the dragged "knob", reads the waveform data linked with the current value of the parameter from the waveform data table **112***c*, and drives the oscillatory actuator **115**. Therefore, while the "knob" is being dragged, the fingertip of the user performing the touch operation or the hand of the user holding the PDA **10** is given vibration in accordance with the value of the parameter.

[0281] Note that as explained below, it is also possible to perform processing for synthesizing a waveform of a drive signal. For example, when the value of the parameter may be a numeric value in the range from "0" to "100", as shown in **FIG. 43** to **FIG. 45**, the waveform data sets of the drive signals for the case where the value of the parameter is "0" (**FIG. 43**), for the case where the value of the parameter is "50" (**FIG. 44**), and the case where the value of the parameter is "100" (**FIG. 45**) are stored in the memory **112**. When the current value of the parameter is "40", the CPU **113** synthesizes two waveforms in the ratio of the waveform of the value of a parameter "0" to the waveform of the value of a parameter "50" as 1 to 4. Further, the CPU **113** applies the synthesized waveform to the oscillatory actuator **115** as the drive signal.

[0282] Further, it can also change only the amplitude of the drive signal in proportion to the value of the parameter and change the magnitude of the vibration.

[0283] As explained above, according to the third example of the present embodiment, in the case of detecting a touch

operation for changing the value of the parameter on the touch panel **102**, the CPU **113** causes the oscillatory actuator **115** to generate vibration in the mode of vibration linked with the value of the parameter changed by the touch operation. Thus, the PDA **10** can change the mode of vibration for reporting that a touch operation has been received according to the value of the parameter changed by this touch operation.

[**0284**] Note that the aspect of the invention according to the third example of the present embodiment can also be applied to an electronic device having an operating member for changing seamlessly a variable value of the parameter (for example a slider switch **993** illustrated in **FIG. 78, a** dial type switch **994** illustrated in **FIG. 79**, etc.). In this case, in the case of detecting that the operating member has been operated, the operating unit of the electronic device causes the vibration generator to generate vibration in a mode of vibration linked with the value of the parameter changed by the operation of the operating member. As a result, the mode of vibration for reporting that operation of the operating member has been received by the electronic device can be changed in accordance with the value of the parameter changed by operation of the operating member.

[**0285**] [G: Seventh Embodiment]

[**0286**] In this embodiment, explanation will be given on an electronic device for reporting to the user that a touch operation has been received by vibration of a mode that differs in accordance with the level of pressure of the touch operation on the touch panel. Note that in this embodiment, the explanation will be given based on the PDA **10** explained in the first embodiment. Therefore, the same reference numerals will be used for portions common with the first embodiment. Further, explanations of portion common with the first embodiment will be omitted.

[**0287**] In this embodiment, the touch panel of the PDA **10** can detect two operating states, that is, the state where the fingertip of the user is in contact with the touch panel (hereinafter, in this embodiment, called a "touch operation") and the state where the fingertip is pressing the touch panel by a force of more than a predetermined level of pressure (hereinafter, in this embodiment, called a "pressing operation"). The type of touch signal output from the touch panel to the CPU **113** differs from the case of a touch operation to the case of a pressing operation.

[**0288**] Further, the memory **112** of the PDA **10** according to the present embodiment stores the waveform data table **112***d* shown in **FIG. 46**. The waveform data table **112***d* corresponds to the example of the screen display of the touch buttons shown in **FIG. 32**. The waveform data table **112***d* stores for each touch button the area data for the touch button and the waveform data to be applied to the oscillatory actuator **115** for each of the cases when the touch button is subjected to a touch operation and when it is subjected to a pressing operation.

[**0289**] In a PDA **10** having this configuration, when a touch operation is performed on the touch panel, the touch panel outputs to the CPU **113** a touch signal showing that a touch operation has been performed. The CPU **113** finds the coordinate data of the touched position based on the touch signal and identifies the touch button operated referring to the waveform data table **112***d*. Next, the CPU **113** reads the waveform data for the touch operation linked with the identified touch button from the waveform data table **112***d*. The CPU **113** then drives the oscillatory actuator **115** using the drive signal generated by the read waveform data. The same is true for the case when a pressing operation is performed on the touch panel. The CPU **113** reads the waveform data for the pressing operation linked with the operated touch button from the waveform data table **112***d* and drives the oscillatory actuator **115**.

[**0290**] By adopting this configuration, when for example the user moves his or her fingertip in a state contacting but not pressing against the touch panel to find the position of a touch button, the PDA **10** transmits to the user vibration for the touch operation linked with the type of touch button contacted by the fingertip. That is, in the state where the user is searching the position of a touch button, for example, a weak vibration that differs for each type of touch button is transmitted to the user. On the other hand, when the user finds the desired touch button and presses against the touch button, the PDA **10** transmits to the user vibration for the pressing operation linked with the type of the touch button. That is, when the user presses against a touch button, vibration showing that the operation has been received is given to the user.

[**0291**] Such control for the report by vibration is particularly effective when the visual confirmation of operation input is difficult. For example, it is effective when applied to a car navigation system. Further, even in a general electronic device, it is effective when performing operation input by touch at night in a state where there is no light.

[**0292**] As explained above, according to the present invention, in the case of detecting operation input to the touch panel, the CPU **113** causes the oscillatory actuator **115** to generate vibration by a mode of vibration differs for the case of a touch operation to the case of a pressing operation. Therefore, the PDA **10** can change the mode of vibration for reporting that an operation input has been received in accordance with the method of operation input to the touch panel.

[**0293**] Note that it is also possible to use a combination of a touch panel for receiving as operation input the state of the fingertip of the user in contact with the touch panel and a touch panel for receiving as operation input pressure of more than a predetermined level of pressure by the fingertip of the user. Further, the number of such combined touch panels is not limited to two.

[**0294**] [H: Eighth Embodiment]

[**0295**] In the present embodiment, description will be given on an electronic device having an audio report mode for reporting that an operation input has been received by sound as well as a vibration report mode for reporting that an operation input has been received by vibration; the electronic device switches the report mode in accordance with the level of sound of its surroundings. Note that in this embodiment, the same reference numerals will be used for portions common with the first embodiment. Further, an explanation of portions common with the first embodiment will be omitted.

[**0296**] [H-1: Configuration of Eighth Embodiment]

[**0297**] **FIG. 47** is a block diagram illustrating the hardware configuration of a PDA **60**. As shown in the figure, the

PDA **60** has a touch panel **102**, a display unit **103**, a key input unit **111**, a memory **112**, a CPU **113**, a drive signal generation circuit **114**, an oscillatory actuator **115**, a microphone **601**, a sound volume measurement circuit **602**, a beep generation circuit **603**, and a speaker **604**.

[**0298**] The sound volume measurement circuit **602** measures the level of sound based on the analog signal waveform of the surrounding sound of the PDA **60** obtained from the microphone **601** and outputs the result of measurement to the CPU **113**. The beep generation circuit **603** generates a drive signal to be applied to the speaker **604** in accordance with an instruction from the CPU **113**. The drive signal is applied to the speaker **604** and a beep is generated.

[**0299**] The PDA **60** has an audio report mode which reports that an operation input has been received by a beeping sound and a vibration report mode which reports that an operation input has been received by vibration. The CPU **113** executes a report control processing **1** (see **FIG. 48**) and reports to the user by a beeping sound or vibration that a touch operation to the touch panel **102** has been received. At this time, the CPU **113** switches the report mode to the audio report mode or the vibration report mode in accordance with the results of measurement by the sound volume measurement circuit **602**. The switching control of the report mode is performed because at a noise of more than a certain level such as in the street, a report by a beeping sound is little effective. When the CPU **113** determines that the surrounding volume of the PDA **60** is more than a preset level of sound, it selects at least the vibration report mode.

[**0300**] [H-2: Operation of Eighth Embodiment]

[**0301**] **FIG. 48** is a flow chart for explaining the operation of the report control processing **1** executed by the CPU **113** in a PDA **60** according to this embodiment. This report control processing **1** is executed by the CPU **113** at every predetermined period in a period in which a touch operation on the touch panel **102** is permitted.

[**0302**] As shown in the figure, first, the CPU **113** determines whether a touch signal has been input from the touch panel **102** (step S**601**). The CPU **113** ends the report control processing **1** when it is determined that a touch signal has not been input. On the other hand, when it is determined that an operation input has been input, the CPU **113** then determines whether the sound volume of the surroundings of the PDA **60** is higher than a preset level of sound based on the results measured by the sound volume measurement circuit **602** (step S**602**). When the sound volume of the surroundings of the PDA **60** is not more than a preset sound level, it determines the audio report mode as the report mode (step S**603**). Further, the CPU **113** drives the beep generation circuit **603** to produce the beeping sound from the speaker **605** (step S**604**) and reports that a touch operation has been received by a beeping sound to the user.

[**0303**] On the other hand, when judging in step S**602** that the sound volume in the surroundings of the PDA **60** is more than the preset level of sound, the CPU **113** determines the vibration report mode as the report mode (step S**605**). Further, the CPU **113** drives the oscillatory actuator **115** through the drive signal generation circuit **114** to report that the touch operation has been received to the user by vibration. Note that the processing in step S**606** and the following steps is similar to the processing in step S**102** and the following steps of the vibration control processing **1** explained in the first embodiment (see **FIG. 5**), so an explanation thereof will be omitted.

[**0304**] As explained above, according to the present embodiment, the CPU **113** switches the report mode for reporting that a touch operation has been received to the audio report mode or the vibration report mode based on the measurement results obtained from the sound volume measurement circuit **602**. Therefore, at the PDA **60** it can be automatically selected whether to report by vibration or whether to report by a beeping sound in accordance with the sound volume (noise level) of the surroundings.

[**0305**] Note that in the present embodiment, the report mode may also be so configured as to be designated by the user. In this case, the CPU **113** displays a screen for prompting the user to designate the report mode to be used. The CPU **113** stores designation information in the memory **112** when one or more of the audio report mode or vibration report mode is selected by operation input from the user. Further, when the CPU **113** determines that a touch signal has been input from the touch panel **102** at step S**601**, it sets the report mode to at least one of the audio report mode or vibration report mode in accordance with the designation information stored in the memory **112**.

[**0306**] Further, as explained in the first embodiment, by applying an audible band audio signal to the coil **121** of the oscillatory actuator **115**, it is possible to use the oscillatory actuator **115** as a speaker **604** (sound source). Here, the waveform of the drive signal for causing the generation of vibration from the oscillatory actuator **115** is as shown for example in **FIG. 49**. Note that in the figure, the frequency f_0 of the drive signal is the frequency for causing resonance of any one of the main case **101** of the PDA **10**, the liquid crystal display panel **103***a* provided with the touch panel **102**, and the oscillatory actuator **115** itself. Further, the waveform of the drive signal for causing the oscillatory actuator **115** to generate sound is as shown in **FIG. 50**.

[**0307**] Further, **FIG. 51** is an example of the waveform of the drive signal for causing the oscillatory actuator **115** to generate vibration and sound simultaneously. The waveform shown in the figure is a combination of the waveform for generating vibration shown in **FIG. 49** and the waveform for generating sound shown in **FIG. 50**. The processing for synthesizing the waveform for generating vibration and the waveform for generating sound is executed by the drive signal generation circuit **114**. By driving the oscillatory actuator **115** using the drive signal shown in **FIG. 49** to **FIG. 51**, it is possible to realize the generation of vibration and sound by using the oscillatory actuator **115** only.

[**0308**] Note that in the case of imparting the oscillatory actuator **115** the function of a sound source in this way, it is suitable to use for example the liquid crystal display panel **103***a* or the main case **101** as a sound amplification mechanism, through which vibration generated from the oscillatory actuator **115** is transmitted in accordance with application of an audio signal and the magnitude of the sound generated from the oscillatory actuator **115** is amplified. Further, it is also possible to provide for example a paper cone or horn or other sound amplification mechanism at the inside or outside of the oscillatory actuator **115**. Further, the sound generated from the oscillatory actuator **115** is not

limited to a buzzer sound or other reporting sound and of course includes music, the human voice, and other reproduced sound.

[**0309**] [I: Ninth Embodiment]

[**0310**] In this embodiment, description will be made on an electronic device that switches between the audio report mode and vibration report mode explained in the eighth embodiment in accordance with a beacon received from a wireless base station. Note that in this embodiment, the same reference numerals will be used for portions common with the eighth embodiment. Further, explanations of portions common with the eighth embodiment will be omitted.

[**0311**] [I-1: Configuration of Ninth Embodiment]

[**0312**] **FIG. 52** is a block diagram illustrating the hardware configuration of the PDA **70**. As shown in the figure, the PDA **70** has a touch panel **102**, a display unit **103**, a key input unit **111**, a memory **112**, a CPU **113**, a drive signal generation circuit **114**, an oscillatory actuator **115**, a beep generation circuit **603**, a speaker **604**, and a wireless communication unit **701**.

[**0313**] This PDA **70** is a mobile station served by a wireless LAN having a plurality of base stations. The PDA **70** engages in wireless communication with a base station covering the wireless area in which the device **70** itself is located and receives a packet communications service provided by the wireless LAN. Further, the PDA **70** has an audio report mode for reporting that an operation input has been received by sound and a vibration report mode for reporting that an operation input has been received by vibration.

[**0314**] The wireless communications unit **701** controls the wireless communication performed with the base station. This wireless communications unit **701** superposes packet communications data and others on a carrier to generate a radio signal under the control of the CPU **113** and transmits the radio signal to the base station. Further, the wireless communication unit **701** receives the radio signal transmitted from the base station and demodulates this to obtain data addressed to the device **70** itself. Further, the wireless communications unit **701** receives a beacon transmitted periodically from the base station.

[**0315**] Here, the "beacon" is a radio signal transmitted periodically by the base station within its own radio area and is transmitted at a rate of, for example, several times a second. The beacon includes control bit data designating at least one of the audio report mode or vibration report mode for the report mode of the PDA **70**. The control bit data is set, for example, to "0" when designating only the audio report mode for the report mode of the PDA **70**, "1" when designating only the vibration report mode for the report mode, "2" when designating joint use of the audio report mode and vibration report mode for the report mode, and "3" when designating not to use either report mode.

[**0316**] For example, the base station installed in public facilities such as a station and a movie theater transmits a beacon including the control bit data "1" within its own radio area. As a result, the report mode of a PDA **70** which has received this beacon is set to the vibration report mode. Note that in a base station installed in a movie theater, it is also possible to designate the vibration report mode for the report mode of the PDA **70** only while the movie is being shown and to designate joint use of the audio report mode and vibration report mode other than when the movie is being shown.

[**0317**] When receiving a beacon from the base station covering the radio area in which the device **70** is located, the CPU **113** of the device **70** stores the control bit data included in the beacon in the memory **112**. Further, in the case of detecting a touch operation on the touch panel **102**, the CPU **113** determines the report mode in accordance with the control bit data stored in the memory **112** and reports to the user that a touch operation has been received by the determined report mode. In this way, the PDA **70** of the present embodiment is forcibly designated as to the report mode by the beacon received from the base station.

[**0318**] [1-2: Operation of Ninth Embodiment]

[**0319**] **FIG. 53** is a flow chart for explaining the operation of a beacon receiving processing executed by the CPU **113** in the PDA **70** according to the present embodiment. This beacon receiving processing is executed by the CPU **113** when the PDA **70** receives a beacon transmitted from the base station. Note that for example when the radio area of a certain base station partially overlaps the radio area of another base station, and if the PDA **70** located in the overlapping areas receives beacons from both base stations, the CPU **113** selects the beacon with the stronger wave strength from the received beacons and executes beacon receiving processing for the selected beacon.

[**0320**] As shown in the figure, first, the CPU **113** demodulates the beacon received by the wireless communications unit **701** (step T**101**). Next, the CPU **113** extracts the control bit data included in the demodulated beacon (step T**102**). Further, the CPU **113** stores the extracted control bit data in the memory **112** (step T**103**) and ends the beacon receiving processing. Note that at step T**103**, the CPU **113** may also be so configured as to compare the currently extracted control bit data and the control bit data already stored in the memory **112** and, when the two control bit data do not match, to overwrite the memory **112** with the currently extracted bit data.

[**0321**] Further, the CPU **113** executes report control processing for reporting that a touch operation on the touch panel **102** has been received to the user by vibration or a beeping sound. The report control processing in this embodiment is substantially the same as the report control processing **1** explained in the eighth embodiment (see **FIG. 48**), so illustration and detailed explanations will be omitted. The main points however are as follows.

[**0322**] That is, when a touch signal is input from the touch panel **102**, the CPU **113** determines the report mode in accordance with the control bit data stored in the memory **112**. For example, when the control bit data stored in the memory **112** is "0", it determines the audio report mode for the report mode. Further, the CPU **113** drives the beep generation circuit **603** to cause the speaker **604** to emit a beeping sound to report that a touch operation has been received to the user by the reporting sound.

[**0323**] On the other hand, when the control bit data stored in the memory **112** is "1", the CPU **113** determines the vibration report mode for the report mode. Further, the CPU **113** drives the oscillatory actuator **115** through the drive

signal generation circuit **114** to report that a touch operation has been received to the user by vibration.

[**0324**] As explained above, according to the present embodiment, the CPU **113** determines the report mode for reporting that a touch operation has been received in accordance with a beacon received from a base station. Therefore, it is possible for a base station side to designate the report mode for a PDA **70** located in its radio area. Accordingly, the report mode of a PDA **70** located in public facilities such as a movie theater and a station can be automatically switched from the audio report mode to the vibration report mode without the user changing the settings.

[**0325**] Note that as explained in the eighth embodiment, it is also possible to use an oscillatory actuator provided with the function of a speaker **604**. Further, the aspect of the invention according to the present embodiment can of course also be applied to a mobile phone serviced by a PDC (personal digital cellular) type mobile packet communication network or a PHS (personal handyphone system (registered trademark)) terminal.

[**0326**] [J: 10th Embodiment]

[**0327**] In this embodiment, description will be given on an electronic device having the function of acquiring the current location of the device and switching between the audio report mode and vibration report mode based on its current location. Note that the PDA according to the present embodiment has a hardware configuration identical to the PDA explained in the ninth embodiment (see **FIG. 52**), so the same reference numerals will be used. Further, explanations of portions common with the ninth embodiment will be omitted.

[**0328**] In the PDA **70** according to this embodiment, the wireless communications unit **701** receives a beacon transmitted periodically from a base station. This beacon includes a base station ID for identifying the base station transmitting the beacon. The PDA **70** utilizes the base station ID contained in the beacon as location information showing the current location of the device **70**.

[**0329**] The memory **112** stores a report mode decision table **112***e* shown in **FIG. 54**. The report mode decision table **112***e* stores a base station ID showing the area in which the report mode of the PDA **70** is to be made the vibration report mode. The base station IDs stored in this report mode decision table **112***e* is those of base stations established in for example a public facility where use of an audio report mode would be nuisance to others. This report mode decision table **112***e* is transmitted to the PDA **70** from the service control station of the wireless LAN through a base station.

[**0330**] In the PDA **70** having the configuration explained above, when receiving a beacon from the base station covering the radio area in which the device **70** is located, the CPU **113** executes beacon receiving processing. In this beacon receiving processing, the CPU **113** extracts the base station ID included in the beacon demodulated by the wireless communication unit **701** and stores the base station ID as location information of the device **70** in the memory **112**.

[**0331**] Further, the CPU **113** executes report control processing for reporting that a touch operation to the touch panel **102** has been received to the user by vibration or a beeping sound. In this report control processing, in the case of detecting a touch operation on the touch panel **102**, the CPU **113** compares the base station ID showing the current location of the device **70** stored in the memory **112** and each of the base station IDs stored in the report mode decision table **112***e*.

[**0332**] Further, when the base station ID showing the current location of the device **70** is not stored in the report mode decision table **112***e*, the CPU **113** reports that a touch operation has been received to the user in accordance with the report mode set by the user in advance (for example, the audio report mode). Further, when the base station ID showing the current location of the device **70** is stored in the report mode decision table **112***e*, the CPU **113** determines the vibration report mode for the report mode and reports that a touch operation has been received to the user by vibration. Note that the control of the beep generation circuit **603** and speaker **604** at the time of the audio report mode and the control of the drive signal generation circuit **114** and the oscillatory actuator **115** at the time of the vibration report mode were already explained in the eighth embodiment, so will not be explained here.

[**0333**] As explained above, according to the present embodiment, the CPU **113** determines the report mode for reporting that a touch operation has been received in accordance with location information showing the current location of the PDA **70**. Therefore, it is possible to change the report mode of a PDA **70** located in public facilities such as a movie theater and a station automatically from the audio report mode to the vibration report mode even without the user changing settings.

[**0334**] Note that in the present embodiment, the explanation was given of the case of using the base station ID included in the beacon received from a base station as the location information. It is however also possible to add a GPS (global positioning system) function to the PDA **70** and determine the report mode using the location information showing the longitude and latitude of the current location of the device **70** acquired from the GPS function. Further, when the wireless LAN provides a location measuring service for mobile stations, the PDA **70** may receive from a base station location information (longitude and latitude information) showing the current location of the device **70** and use this location information to determine the report mode. In these cases, however, the area data stored in the report mode decision table **112***e* has to be made area data based on the longitude and latitude information rather than the base station IDs.

[**0335**] Further, the report mode decision table **112***e* can be customized by the user. For example, by executing registration processing at a location where a vibration report mode is desired, the user can additionally register, in the report mode decision table **112***e*, a base station ID showing the current location of the device **70** stored in the memory **112**.

[**0336**] Further, as explained in the eighth embodiment, it is also possible to use an oscillatory actuator provided with the function of a speaker **604**. Further, the aspect of the invention according to this embodiment can of course also be applied to a mobile phone serviced by a PDC type mobile packet communication network or a PHS terminal.

[0337] [K: Eleventh Embodiment]

[0338] In this embodiment, description will be given on an electronic device having a plurality of vibration generators and controlling the signal waveforms of the drive signals applied to each of the vibration generators based on a touched position on the touch panel. Note that in this embodiment, the same reference numerals will be used for portions common with the fifth embodiment. Further, explanations of portions common with the fifth embodiment will be omitted.

[0339] [K-1: Configuration of Eleventh Embodiment]

[0340] **FIG. 55** is a view for explaining an ATM according to this embodiment. As shown in the figure, the back surface of the liquid crystal display panel **501** over which the touch panel **502** is laid is provided at its four comers with a total of four oscillatory actuators **115***a*, **115***b*, **115***c*, and **115***d*. The plurality of oscillatory actuators **115***a* to **115***d* are provided in this way because in an electronic device having a large sized display screen such as an ATM or a personal computer it is difficult to give sufficient vibration by a single vibration generator to the fingertip of a user performing a touch operation.

[0341] In this embodiment, description will be given of the control for efficiently driving the oscillatory actuators **115***a* to **115***d* to give a larger vibration to the fingertip of the user while keeping down the power consumption required for the vibration report when performing reporting operation by vibration using these plurality of oscillatory actuators **115***a* to **115***d*.

[0342] **FIG. 56** is a block diagram illustrating the hardware configuration of the ATM **90** according to this embodiment. As shown in this figure, the ATM **90** has a touch panel **502**, a display unit **901**, a memory **902**, a drive signal generation circuit **903**, oscillatory actuators **115***a* to **115***d*, and a CPU **904**.

[0343] The touch panel **502** outputs to the CPU **904***a* touch signal showing a touched position on the touch panel **502** in response to a touch operation. Further, the display unit **901** has a liquid crystal display panel **501** and a drive circuit for controlling the display of the liquid crystal display panel **501**. The memory **902** stores programs and data etc. for controlling the ATM **90**. Further, the memory **902** stores waveform data of drive signals to be applied to the oscillatory actuators **115***a* to **115***d*. Note that in the present embodiment, the shapes of the waveforms of the drive signals to be applied to the oscillatory actuators **115***a* to **115***d* are the same. Further, the frequencies of the drive signals are made to match with the frequency causing the liquid crystal display panel **501** provided with the touch panel **502** to resonate or the frequency causing the oscillatory actuators **115***a* to **115***d* themselves to resonate.

[0344] The drive signal generation circuit **903** generates drive signals for driving each of the oscillatory actuators **115***a* to **115***d* in accordance with waveform data and phase data supplied from the CPU **904**. Further, the drive signal generation circuit **903** applies drive signals to the oscillatory actuators **115***a* to **115***d* in accordance with instructions from the CPU **904**. The oscillatory actuators **115***a* to **115***d* are the same as the oscillatory actuator **115** explained in the first embodiment.

[0345] The CPU **904** controls the parts of the device interconnected through a bus **905** by executing a program stored in the memory **902**. The CPU **904** executes the vibration control processing **6** (see **FIG. 57** and **FIG. 58**). In the case of detecting a touch operation on the touch panel **502**, it drives each of the oscillatory actuators **115***a* to **115***d* through the drive signal generation circuit **903** to cause the touch panel **502** and the liquid crystal display panel **501** to vibrate.

[0346] [K-2: Operation of Eleventh Embodiment]

[0347] **FIG. 57** and **FIG. 58** show a flow chart for explaining the operation of the vibration control processing **6** executed by the CPU **904** in the ATM **90** according to this embodiment. This vibration control processing **6** is executed by the CPU **904** at every predetermined period in a period in which a touch operation on the touch panel **502** is permitted.

[0348] As shown in **FIG. 57**, first, the CPU **904** determines whether a touch signal has been input from the touch panel **502** (step S**701**). When it is determined that a touch signal has not been input, the CPU **904** ends the vibration control processing **6**. Further, when it is determined that a touch signal has been input, the CPU **904** identifies a touched position (XY coordinates) on the touch panel **502** based on the touch signal (step S**702**). Note that when it is determined that a touched position on the touch panel **502** falls outside of the display areas of the touch buttons displayed on the display screen, the CPU **904** need not execute the processing of step S**703** and may end the vibration control processing **6**.

[0349] Next, the CPU **904**, as shown in **FIG. 55**, finds the positional relationship between a touched position and each of the oscillatory actuators **115***a* to **115***d* such as calculating the straight line distance between the touched position and each of the oscillatory actuators **115***a* to **115***d* (step S**703**). Further, the CPU **904** performs vibration analysis using as parameters the positional relationship between the touched position and each of the oscillatory actuators **115***a* to **115***d*, the material of the liquid crystal display panel **501** where the oscillatory actuators **115***a* to **115***d* are placed, the elasticity of the damper **503**, and others. Note that it is also possible to store in advance the data of the results of vibration analysis for different touched positions on the touch panel **502** in the memory **902** and utilize them. By adopting such a configuration, there is no need to perform the vibration analysis for each touched position in real time. Further, the CPU **904** calculates the phase of a drive signal to be applied to each of the oscillatory actuators **115***a* to **115***d* so that the amplitude of the vibration at each touched position becomes the greatest due to mutual interference of oscillatory waves generated from each of the oscillatory actuators **115***a* to **115***d* (step S**704**).

[0350] Next, the CPU **904** reads the waveform data of the same drive signal to be applied to the oscillatory actuators **115** from the memory **902** (step S**705**). Next, the CPU **904** outputs to the drive signal generation circuit **903** the waveform data read from the memory **904** and the phase data for each of the oscillatory actuators **115***a* to **115***d* calculated at step S**704**. At the same time, the CPU **904** instructs the drive signal generation circuit **903** to generate a drive signal (step S**706**). The drive signal generation circuit **903** uses the waveform data and the phase data supplied from the CPU

904 and generates a drive signal to be applied to each of the oscillatory actuators **115***a* to **115***d*. The processing in step **S707** and the following steps is similar to the processing in step S**104** and the following steps of the vibration control processing **1** explained in the first embodiment (see **FIG. 5**) except for the fact that there are a plurality of oscillatory actuators **115***a* to **115***d* driven, so an explanation will be omitted. As a result of the vibration control processing **6**, oscillatory waves having phases calculated at step S**704** are given to the touch panel **502** from each of the oscillatory actuators **115***a* to **115***d*.

[**0351**] As explained above, according to the present embodiment, the CPU **904** adjusts the phases of the drive signals applied to each of the oscillatory actuators **115***a* to **115***d* so that the amplitude of the vibration occurring at a touched position on the touch panel **502** becomes the greatest due to mutual interference of oscillatory waves generated from each of the oscillatory actuators **115***a* to **115***d*. Therefore, the ATM **90** can efficiently drive the oscillatory actuators **115***a* to **115***d* and give a greater vibration to the fingertip of the user while keeping down the power consumption required for the vibration report.

[**0352**] Note that in this embodiment, the explanation was given of the case of adjusting the phases of the drive signals applied to each of the oscillatory actuators **115***a* to **115***d*. It is however also possible to adjust something other than the phases, for example, the amplitudes of the drive signals. Further, the number of the oscillatory actuators provided is not limited to four. Further, the oscillatory actuators may be provided for example at the touch panel **502** or may be provided as shown in **FIG. 27** sandwiched between the liquid crystal display panel **501** and the touch panel **502**.

[**0353**] Further, it is also possible to divide the front surface of the touch panel **502** into units of about the area touched when a fingertip touches the touch panel **502**, calculate in advance for each section the phase data of a drive signal to be applied to each of the oscillatory actuators **115***a* to **115***d* when a divided section is touched, and store a data table storing the results of calculation in the memory **902**. When adopting this configuration, it is not necessary to perform real time computing of the phases of the drive signals to be applied to the oscillatory actuators **115***a* to **115***d* based on a touched position. Therefore, it is possible to improve the response speed of a vibration report for a touch operation.

[**0354**] Further, **FIG. 59** and **FIG. 60** are sectional views for explaining an ATM according to a modification of this embodiment. The front surface of the touch panel **502** of the ATM according to this modification has overlaid on it a deformation layer **550** comprised of a high viscosity liquid substance or gel or a fine particulate substance covered by a deformable protective film. Note that the liquid substance, gel, particulate substance, and protective film of this deformation layer **550** are transparent.

[**0355**] In such an ATM, when driving the oscillatory actuators **115***a* to **115***d*, a wave occurs on the surface of the deformation layer **550** due to the vibration generated by the oscillatory actuators **115***a* to **115***d*. The CPU of the ATM adjusts the phases of a drive signal to be applied to each of the oscillatory actuators **115***a* to **115***d* so that the height of the surface of the deformation layer **550** at a touched position becomes higher than at the time not touched due to mutual interference of the waves generated for each oscillatory actuator **115***a* to **115***d*. Due to this, as shown in **FIG. 59**, it is possible to cause the portion of a touched position in the surface of the deformation layer **550** to rise up.

[**0356**] Alternatively and conversely, the CPU of the ATM adjusts the phases of the drive signals applied to the oscillatory actuators **115***a* to **115***d* so that the height of the front surface of the deformation layer **550** at a touched position becomes lower than at the time not touched due to mutual interference of the waves generated for each oscillatory actuator **115***a* to **115***d*. Due to this, as shown in **FIG. 60**, it is possible to cause the portion of a touched position in the front surface of the deformation layer **550** to sink.

[**0357**] In this way, according to this modification, it is possible to report to the user that a touch operation has been received by changing the thickness of the deformation layer **550**. Further, it is possible to give a user performing a touch operation a pressing feeling of a touch button displayed on the screen by controlling the oscillatory actuators **115***a* to **115***e* so as to make the front surface portion of a touched position in the deformation layer **550** sink.

[**0358**] Note that in this modification, not only the phases but also the amplitudes of the vibration caused at the oscillatory actuators **115***a* to **115***d* and the shapes of waveforms and directions of the vibration are important factors in controlling the driving of the oscillatory actuators **115***a* to **115***d*. It can be derived from this that it is preferable to divide the surface of the touch panel **502** into units of about the area touched when touching the touch panel **502** by the fingertip, calculate in advance for each section the waveform data of a drive signal to be applied to each of the oscillatory actuators **115***a* to **115***d* when a divided section is touched, and store in a memory a data table storing the results of calculation.

[**0359**] [L: Twelfth Embodiment]

[**0360**] In this embodiment, description will be given on an electronic device having a plurality of vibration generators in the same way as the eleventh embodiment and switching a vibration generator to be driven based on a touched position on the touch panel. Note that in this embodiment, the same reference numerals will be used for portions common with the eleventh embodiment. Further, explanations of portions common with the eleventh embodiment will be omitted.

[**0361**] [L-1: Configuration of Twelfth Embodiment]

[**0362**] **FIG. 61** is a view for explaining an ATM according to this embodiment.

[**0363**] As shown in the figure, the back surface of the liquid crystal display panel **501** over which the touch panel **502** is laid is provided at its four corners with a total of four oscillatory actuators **115***a* to **115***d*. Further, as shown in the figure, the touchable area on the touch panel **502** is divided into a plurality of areas A**1** to A**5**. In the present embodiment, when performing a reporting operation by vibration, an oscillatory actuator(s) to be driven is selected from among the oscillatory actuators **115***a* to **115***d* in accordance with which area of the areas A**1** to A**5** a touched position on the touch panel **502** is contained.

[**0364**] The hardware configuration of the ATM according to the present embodiment is similar to that shown in **FIG.**

56 for the eleventh embodiment. The memory **902**, however, stores a driving object decision table **902***a* shown in **FIG. 62**. As shown in the figure, the driving object decision table **902***a* stores, for each of divided areas A**1** to A**5** on the touch panel **502**, area data showing the divided area concerned using XY coordinates and identification information of an oscillatory actuator to be driven when that divided area is touched. Note that in the figure, reference numerals assigned to the oscillatory actuators **115***a* to **115***d* are used as the identification information of the oscillatory actuators.

[**0365**] According to the driving object decision table **902***a*, only the oscillatory actuator **115***a* is driven when the area A**1** is touched on the touch panel **502** shown in **FIG. 61**. Further, all of the oscillatory actuators **115***a* to **115***d* are driven when the area A**5** is touched on the touch panel **502**.

[**0366**] In the case of detecting a touch operation on the touch panel **502**, the CPU **904** detects the touched position and refers to the driving object decision table **902***a* to determine an oscillatory actuator(s) to be driven. Further, the CPU **904** drives the determined oscillatory actuator through the drive signal generation circuit **903** to cause the touch panel **502** and the liquid crystal display panel **501** to vibrate.

[**0367**] [L-2: Operation of Twelfth Embodiment]

[**0368**] **FIG. 63** is a flow chart for explaining the operation of the vibration control processing **7** executed by the CPU **904** in an ATM according to this embodiment. The vibration control processing **7** is executed by the CPU **904** at every predetermined period in a period in which a touch operation on the touch panel **502** is permitted.

[**0369**] As shown in the figure, first, the CPU **904** determines whether a touch signal has been input from the touch panel **502** (step S**801**). When it is determined that a touch signal has not been input, the CPU **904** ends the vibration control processing **7**. Further, when it is determined that a touch signal has been input, the CPU **904** identifies the touched position (XY coordinates) on the touch panel **502** based on the touch signal (step S**802**).

[**0370**] Next, the CPU **904** identifies the divided area in which the touched position is contained by referring to the driving object decision table **902***a* shown in **FIG. 62** and determines an oscillatory actuator(s) to be driven (step S**803**). Next, the CPU **904** reads the waveform data of the drive signal for driving the determined oscillatory actuator(s) from the memory **902** (step S**804**). Further, the CPU **904** outputs the waveform data read from the memory **902** and the identification information of the oscillatory actuators determined at step S**803** to the drive signal generation circuit **903**. At the same time as this, the CPU **904** instructs the drive signal generation circuit **903** to generate a drive signal (step S**805**). Note that the processing in step S**806** and the following steps are similar to the processing in step S**104** and the following steps of the first vibration control processing explained in the first embodiment (see **FIG. 5**) except that only the designated oscillatory actuators among the plurality of oscillatory actuators **115***a* to **115***d* are driven, so explanations will be omitted.

[**0371**] As explained above, according to the present embodiment, the CPU **904** switches the oscillatory actuator(s) to be driven in accordance with a touched position on the touch panel **502**. Therefore, the ATM can efficiently drive the oscillatory actuators **115***a* to **115***d* in accordance with the touched position on the touch panel **502**.

[**0372**] Note that in this embodiment, the area on the touch panel **502** was divided into a plurality of areas in advance and identification information of the oscillatory actuators to be driven when a divided area was touched is stored in the memory **902** for each divided area. It is however also possible, in the case of detecting a touch operation on the touch panel **502**, to detect the touched position, calculate the distances between the touched position and the oscillatory actuators **115***a* to **115***d*, and drive the closest oscillatory actuator.

[**0373**] [M: Thirteenth Embodiment]

[**0374**] In this embodiment, a vibration generator suitable for use in the first to twelfth embodiments will be explained. Note that the oscillatory actuator in this embodiment is a movable permanent magnet type linear oscillatory actuator which uses a permanent magnet as the movable weight and causes the movable weight to linearly reciprocate by electromagnetic force so as to generate vibration.

[**0375**] [M-1: First Example]

[**0376**] **FIG. 64** is a sectional view illustrating an internal structure of an oscillatory actuator **950** according to a first example of this embodiment. In the figure, the oscillatory actuator **950** has inside a case **961** a coil **962**, a movable weight **963** (weight), a brake member **964**, and a spring **966**. Note that in the figure, the vibratory member to which the oscillatory actuator **950** gives vibration is provided at a position facing the coil **962** across the case **961**. Further, the case **961** is sealed and functions as a magnetic shield. To give the function of a magnetic shield to the case **961**, it is sufficient to form the case **961** by a conductive material and ground it or make it the same potential or form the case **961** by a magnetic material having a large permeability.

[**0377**] The coil **962** is a coil having a substantially cylindrical shape as shown in the figure and is fixed to the case **961**. When driving the oscillatory actuator **950**, an alternating current (drive signal) is applied to the coil **962**.

[**0378**] The movable weight **963** is positioned above the coil **962**, and is a substantially columnar weight formed of a permanent magnet. At the bottom surface of this movable weight **963** is formed an annular depression in which the top end of the coil **962** fits. The movable weight **963** is supported by the spring **966** in a state where it can linearly reciprocate in the vertical direction in the figure in the space formed inside the case **961**. The spring **966**, as shown in the figure, has one end connected to the case **961** in contact with the vibratory member (base member) and has the other end connected to the movable weight **963**. Note that instead of the spring **966**, it is also possible to use a support member comprised using an elastic body such as a rubber band.

[**0379**] When a drive signal is applied to the coil **962**, this movable weight **963** linearly reciprocates in the vertical direction in the figure due to the magnetic force generated from the coil **962**. Vibrational acceleration occurs at the portion of the case **961** to which the spring **966** is connected by a counter force of the reciprocation of the movable weight **963**. Note that along with the reciprocation of the movable weight **963**, the portion of the case **961** to which the spring **966** is connected is subject to a vibration component

transmitted from the movable weight **963** through the spring **966** in addition to the counter force of the reciprocation; but the principle of generation of vibration in the oscillatory actuator **950** is based on the use of the oscillatory vibration occurring by a counter force of the reciprocation of the movable weight **963**.

[**0380**] The brake member **964** has a brush **965** in constant contact with the side surface of the movable weight **963**. This brush **965** is so designed as to give a suitable contact resistance to the side surface of the movable weight **963**. Here, the contact resistance given by the brush **965** to the movable weight **963** does not inhibit reciprocation much at all when a drive signal is applied to the coil **962** and the movable weight **963** reciprocates. On the other hand, when application of a drive signal to the coil **962** is stopped, the reciprocation of the movable weight **963** quickly stops due to the above contact resistance.

[**0381**] That is, the brake member **964** acts as a brake for causing the reciprocation of the movable weight **963** to quickly stop when application of a drive signal to the coil **962** is stopped. Note that instead of the brush **965**, it is also possible to use a member formed by sponge, urethane, felt, rubber, and the like.

[**0382**] **FIG. 65** to **FIG. 67** are plan views illustrating examples of placement of the brake member **964** and show the case of viewing the inside of the oscillatory actuator **950** from above the sectional view shown in **FIG. 64**. **FIG. 65** shows an example of placement of three brake members **964***a* around the movable weight **963** at 120 degree intervals. Further, **FIG. 66** shows an example of placement of two brake members **964***b* facing each other across the movable weight **963**. Further, **FIG. 67** shows an example of placement of a single cylindrical brake member **964***c* so as to surround the movable weight **963**.

[**0383**] Here, when for example providing the brake member **964***a* at just one location around the movable weight **963**, the movable weight **963** is subjected to contact resistance from only one direction of contact with the brush **965***a* of the brake member **964***a*. Therefore, the posture of the movable weight **963** collapses at the time of reciprocation, and the vibration generated from the oscillatory actuator **950** fluctuates in direction. Further, even when stopping application of the drive signal, since a contact resistance from the brush **965***a* is applied to the movable weight **963** from one direction, the posture of the movable weight **963** collapses and the reciprocation cannot be stopped quickly. Further, a large deviation in the direction of vibration occurs even when stopping application of the drive signal.

[**0384**] To prevent this from happening, as shown in **FIG. 65** to **FIG. 67**, it becomes necessary to place brake members **964***a* to **964***c* so as to give proportional contact resistance of the brushes **965***a* to **965***c* to the movable weight **963** from around the weight. Further, to keep down wear of the brushes **965***a* to **965***c* due to aging or deformation of the brake members **964***a* to **964***c*, it is effective to make the contact area of the movable weight **963** and the brushes **965***a* to **965***c* as large as possible to an extent not obstructing reciprocation of the movable weight **963**.

[**0385**] With an oscillatory actuator without a brake mechanism for the movable weight **963**, when application of a drive voltage of the period **T1** shown in **FIG. 68** is stopped, as shown in **FIG. 69**, the reciprocation of the movable weight **963** does not immediately stop and unnecessary vibration lingers. Therefore, such an oscillatory actuator cannot give the user a "click" or other feeling of operation, where a clear distinction must be exhibited in the strength of vibration in a short time, by vibrational stimulus. Further, at the time same, it is not possible to clearly modulate between vibration and non-vibration.

[**0386**] As opposed to this, according to the first example of the present embodiment, when application of the drive signal shown in **FIG. 68** to the oscillatory actuator **950** is stopped, as shown in **FIG. 70**, the reciprocation of the movable weight **963** is quickly made stopped by the contact resistance of the brake member **964**. Therefore, unnecessary vibration does not linger and a "click" feeling of operation can be given to the user by vibrational stimulus. Further, vibration and non-vibration can be clearly modulated.

[**0387**] [M-2: Second Example]

[**0388**] **FIG. 71** is a sectional view illustrating the internal structure of an oscillatory actuator **951** according to a second example of this embodiment. In this figure, the oscillatory actuator **951** has inside a case **961** a coil **962**, a movable weight **963**, a spring **966**, a brake member **971**, and a brake coil **972**. Note that in the figure, the vibratory member is provided at a position facing the coil **962** across the case **961**. Further, the case **961**, coil **962**, and movable weight **963** are the same as in the first example of the present embodiment, so explanations will be omitted.

[**0389**] The brake member **971** has a brake surface **971***a* covered on its front surface with rubber and a magnet **971***b*. Further, the brake member **971** has attached to it a spring **973** for pulling the brake surface **971** toward the side surface of the movable weight **963**. In the brake member **971**, in the period when a drive signal is not applied to the brake coil **972**, the brake surface **971***a* is pushed against the side surface of the movable weight **963** by the force of the spring **973**. On the other hand, in the period when a drive signal is applied to the brake coil **972**, in the brake member **971**, the magnet **971***b* is pulled toward the brake coil **972**, so the brake surface **971***a* moves away from the side surface of the movable weight **963**. Note that instead of rubber, it is also possible to attach sponge, urethane, felt, a brush, etc. to the front surface of the brake surface **971***a*.

[**0390**] **FIG. 72** is a view illustrating a circuit configuration for applying a drive signal to the coil **962** and the brake coil **972**. In the figure, the oscillator **974** generates a drive signal for driving the coil **962**. An example of the waveform of the drive signal generated by this oscillator **974** is shown in **FIG. 73**. The movable weight **963** reciprocates by the application of the alternating current waveform shown in the figure to the coil **962**. Further, the brake control circuit **975** generates a drive signal to be applied to the brake coil **972**. This brake control circuit **975** monitors the drive signal generated from the oscillator **974** and outputs a drive signal of a square wave to the brake coil **972** for exactly the period **T2** during which the drive signal is generated by the oscillator **974**.

[**0391**] Therefore, in the period when the oscillator **974** applies a drive signal to the coil **962**, a drive signal is applied from the brake control circuit **975** to the brake coil **972**, so the brake surface **971***a* of the brake member **971** moves

away from the side surface of the movable weight **963**. Further, during this period, since the drive signal is supplied from the oscillator **974** to the coil **962**, the movable weight **963** reciprocates. As opposed to this, when application of the drive signal from the oscillator **974** to the coil **962** is stopped, application of the drive signal from the brake control circuit **975** to the brake coil **974** is also stopped. Therefore, the brake surface **971***a* of the brake member **971** is pushed against the side surface of the movable weight **963** and the reciprocation of the movable weight **963** is made to quickly stop. Therefore, similar effects as the first example of the present embodiment are exhibited.

[**0392**] [M-3: Third Example]

[**0393**] **FIG. 75** is a sectional view illustrating the internal structure of an oscillatory actuator **975** according to a third example of this embodiment. In the figure, the oscillatory actuator **952** has inside a case **961** a coil **962**, a movable weight **963**, and a spring **966**. These coil **962**, movable weight **963**, and spring **966** are the same as in the first example of the present embodiment. Further, in the figure, the vibratory member is provided in contact with the case **961** at a position facing the coil **962** across the case **961**.

[**0394**] Next, **FIG. 76** is a view illustrating the circuit configuration for applying a drive signal to the coil **962**. The oscillator **974** shown in the figure is the same as in the second example of the present embodiment, so an explanation will be omitted. The control circuit **981** controls the switching of the switches SW**1** and SW**2** at two locations in the switch circuit **982**. The control circuit **981** monitors the drive signal generated from the oscillator **974** (see **FIG. 73**) and, as shown in **FIG. 77**, outputs a CTRL signal that becomes the "Hi" level for exactly the period T**2** during which the drive signal is generated from the oscillator **974**. The switches SW**1** and SW**2** of the switch circuit **982** connect the oscillator **974** and the coil **962** when the CTRL signal supplied from the control circuit **981** is the "Hi" level. Therefore, while the CTRL signal is the "Hi" level, the drive signal is applied from the oscillator **974** to the coil **962** and the movable weight **963** reciprocates.

[**0395**] As opposed to this, when the CTRL signal supplied from the control circuit **981** becomes the "Low" level, that is, when application of the drive signal from the oscillator **974** to the coil **962** is stopped, the switches SW**1** and SW**2** of the switch circuit **982** switch the connection points as shown in **FIG. 76** and short-circuit the coil **962**. Therefore, due to the electromagnetic braking action, the reciprocation of the movable weight **963** can be quickly made stopped when stopping application of the drive signal. Accordingly, similar effects to the first example of the above embodiment are exhibited.

[**0396**] If using the oscillatory actuators **950** to **952** shown in the first example to the third example of the present embodiment explained above as vibration generators of the electronic devices in the first to twelfth embodiments, it is possible to more suitably control the vibration given to the user.

[**0397**] The reason is that, first, these oscillatory actuators **950** to **952** are provided with brake mechanisms. Therefore, it is possible to clearly give the user a "click" or other operation feeling where the strength of the vibration has to be clearly differentiated in a short time.

[**0398**] Second, these oscillatory actuators **950** to **952** are linear oscillatory actuators, so the directional accuracy of the vibration generated is high. Further, third, these oscillatory actuators **950** to **952** house the coil **962** and the movable weight **963** inside the case **961** sealed as a magnetic shield, so there is no effect of magnetic force from the surrounding electronic components etc. Accordingly, there is no deviation in direction of vibration generated by the oscillatory actuators **950** to **952** and no distortion of the shape of amplification of the vibration. Due to the above second and third advantages, the vibration generated by the oscillatory actuators **950** to **952** can be more finely controlled. Accordingly, it is possible to give the user a pressing feeling or a "click" feeling when the touch panel is touched or when a thin operation key is pressed. Further, the oscillatory actuators **950** to **952** never cause surrounding electronic components etc. to malfunction due to their magnetic force.

[**0399**] Fourth, these oscillatory actuators **950** to **952** are integrally packaged. Therefore, compared with when dividing the members of the oscillatory actuator, first of all there is almost never a problem in the mounting accuracy of the permanent magnet and the coil. Further, there is resistance to deterioration of the accuracy of mounting of the permanent magnet and coil due to aging. Accordingly, it is possible to cause the oscillatory actuators **950** to **952** to generate vibration by a stable accuracy. Further, assembly into an electronic device is easy. Further, even when the electronic device body or housing or other support member for supporting the vibratory member where the oscillatory actuators **950** to **952** are placed (for example, the touch panel or the liquid crystal display panel) is not firmly fixed or when the mass of the support member is not sufficiently large compared with the vibratory member, the oscillatory actuators **950** to **952** can give a sufficiently large vibration to the vibratory member. This is suitable for use for a light weight electronic device or portable electronic device.

[**0400**] Fifth, in the oscillatory actuators **950** to **952**, since an audible band audio signal is applied to the coil **962**, it is also possible to utilize the oscillatory actuators **950** to **952** as sound sources. If it is possible to make dual use of vibration generators and sound sources in this way, it is possible to greatly reduce the installation space of components in a small sized electronic device.

[**0401**] Note that the oscillatory actuators **950** to **952** shown in the first example to third example of the present embodiment are sealed by the case **115***a* having an anti-magnetic effect, but they may also not be sealed by the case **961**. Further, the spring **966** supporting the movable weight **963** may be directly connected to the vibratory member and not to the case **961**.

[**0402**] [N: Modifications]

[**0403**] Above, embodiments of the present invention were explained, but the embodiments are in the end only illustrations. Various modifications are possible within a range not out of the gist of the present invention. The following may be considered as embodiments.

[**0404**] [Modification 1]

[**0405**] In the first embodiment, the memory **112** stores a plurality of types of waveform data. The CPU **113** may read the waveform data designated by the operation input from the user in advance and drive the oscillatory actuator **115**.

According to this configuration, it is possible to give a greater variation to the mode of vibration used at the time of a report. For example, the vibration time, the magnitude of vibration, and the period of the strength of the vibration may be freely changed.

[**0406**] Further, the memory **112** stores sample data of the drive signal waveform. The drive signal generation circuit **114** converts the sample data from a digital to analog (D/A) format to generate the drive signal.

[**0407**] [Modification 2]

[**0408**] In the above first to third embodiments, a user can designate whether to enable or disable the vibration report mode. In this case, the CPU **113** displays a screen for prompting the user to designate whether to enable or disable the report function by operation input from the user. When enablement or disablement is designated by the operation input from the user, the CPU **113** sets the value of the vibration flag in the memory **112**"0" (disable) or "1" (enable) in accordance with the designated content. Further, the CPU **113**, in the case of detecting operation input from the touch panel **102** or the operation keys **104***a* to **104***c*, determines whether to report by vibration or not in accordance with the value of the vibration flag.

[**0409**] [Modification 3]

[**0410**] For example, the present invention can also be applied to an operation panel **990** installed at a location separate from the body of a lighting facility and for inputting an operation instruction to the body of the facility. The operation panel **990** shown in the figure is installed for example on the wall of a room. The rear surface of the operation panel **990** is provided with a vibration generator **991** such as an oscillatory actuator **115**. Further, while not shown, the control device for controlling the main body of the lighting facility controls the report by vibration including driving the vibration generator **991**.

[**0411**] When the user switches an on/off key **992** of the operation panel **990** by his or her fingertip, the control device drives the vibration generator **991** and transmits vibration to the fingertip of the user touching the on/off key **992**. Further, in the lighting facility, the amount of the lighting can be continuously changed from bright to dark. If the user operates a slider switch **993** for instructing the amount of the lighting to the control device by his or her fingertip, vibration of a magnitude in accordance with the amount of lighting changed by this operation is transmitted to the fingertip of the user operating the slider switch **993**. Note that instead of the slider switch **993**, it is also possible to use a dial type switch **994** shown in **FIG. 79** or a plus key **995** and a minus key **996** shown in **FIG. 80** having the same function as the slider switch **993**.

[**0412**] Further, as shown in **FIG. 91**, it is of course possible to apply the present invention to an electronic device not having a touch panel or display unit such as a remote controller of a television or video. In the case of such an electronic device, it is sufficient to report to the user that input has been received from an operation key by causing the operation key or housing to vibrate.

[**0413**] [Modification 4]

[**0414**] In the first to 12th embodiments, the direction of vibration generated from the vibration generator such as an oscillatory actuator or vibrator is not limited to a direction perpendicular to the front surface of the touch panel or the direction of pressing the operation keys. Further, the frequency of the drive signal applied to the oscillatory actuator is not limited to the frequency for causing resonance in the housing or touch panel of the electronic device or the liquid crystal display panel provided with the touch panel or the oscillatory actuator itself. Similarly, the drive voltage applied to the vibrator also is not limited to a drive voltage for making the frequency of the DC motor correspond to the natural frequency of the housing or touch panel of the electronic device or the liquid crystal display panel provided with the touch panel or the vibrator itself.

[**0415**] [Modification 5]

[**0416**] In the first to twelfth embodiments, the vibrator generator is not limited to a linear oscillatory actuator or a vibrator having an eccentric weight. For example, it is also possible to use a vibration generator using a piezoelectric element.

[**0417**] Further, in the embodiments other than the second embodiment, the explanation was made of a linear oscillatory actuator using a permanent magnet as a movable weight. Here, the movable weight requires a mechanism for obtaining a suitable mass necessary for causing the generation of vibration and excitation for the movable weight to reciprocate. In the above embodiments, a permanent magnet was used as the mechanism for obtaining the suitable mass and excitation. The movable weight however may be comprised by assembling a permanent magnet into part of the member of the weight. Further, a permanent magnet may be fixed in the case of the linear oscillatory actuator and a coil used as the movable weight. Further, a coil may be fixed in the case and another coil used as the movable weight. Naturally, in this case, when the coil used as the movable weight does not have a sufficient mass, it is sufficient to use the coil as part of the weight having a suitable mass. Further, the linear oscillatory actuator may also be movable iron core type linear oscillatory actuator.

[**0418**] Further, the oscillatory actuator may also be a so-called electrostatic type oscillatory actuator using electrostatic force. **FIG. 82** is a view for explaining an electrostatic type oscillatory actuator according to a first example of this modification. In the figure, an oscillatory actuator **800** has a movable weight (weight) **803** provided with an electrode **802** inside the case **801**, an electrode **804** provided at the inside wall of the case **801**, and a spring **805**. Note that in the figure, the vibratory member is provided at a position facing the electrode **804** across the case **801**.

[**0419**] The movable weight **803** is a columnar weight provided with an annular electrode **802** at its bottom surface. This movable weight **803** is supported by the spring **805** in a state able to linearly reciprocate in the vertical direction in the figure in the space formed inside the case **801**. This spring **805**, as shown in the figure, has one end connected to the case **801** contacting the vibratory (base member) and has the other end connected to the movable weight **803**. Note that the movable weight **803** other than the electrode **802** should be a weight having a suitable mass. Further, the annular electrode **804** is provided at the surface of the inside wall of the case **801** facing the electrode **802**.

[**0420**] This electrode **804** is supplied with a plus or minus constant potential from the outside of the oscillatory actuator

800 at all times when the oscillatory actuator **800** is being driven. On the other hand, the electrode **802** of the movable weight **802** is supplied with an AC voltage (drive signal) alternating between a plus and minus state from the outside of the oscillatory actuator **800** through an amplifier **810**.

[**0421**] Here, when the potentials of the electrode **802** and electrode **803** become the same, that is, become plus and plus or minus and minus, the charges of the same signs repel each other. Due to this property of electrostatic force, the movable weight **803** moves in the up direction in the figure. On the other hand, when the potentials of the electrode **802** and the electrode **803** become different, that is, plus and minus, the charges of the different sign attract each other. Due to this property of electrostatic force, the movable weight **803** moves in the down direction in the figure.

[**0422**] The oscillatory actuator **800** according to this modification linearly reciprocates in the vertical direction in the figure in this way. Further, by a counter force of the reciprocation of the movable weight **803**, a vibrational acceleration occurs at the portion of the case **801** to which the spring **805** is connected and the vibration is transmitted to the vibratory member. Note that along with reciprocation of the movable weight **803**, a vibration component transmitted from the movable weight **803** through the spring **805** is applied to the portion of the case **801** to which the spring **805** is connected in addition to the counter force of the reciprocation. The principle of generation of vibration in this oscillatory actuator **800**, however, is based on the use of the vibrational acceleration occurring by a counter force to the reciprocation of the movable weight **803** in the same way as in the oscillatory actuator **115** explained in the first embodiment.

[**0423**] Further, **FIG. 83** is a view for explaining an electrostatic type oscillatory actuator according to a second example of this modification. In the configuration shown in this figure as well, in the same way as the oscillatory actuator **800** shown in **FIG. 82**, the movable weight **813** reciprocates due to the electrostatic force and vibration is generated. Further, the oscillatory actuator **850** has a total of two pairs of counter electrodes, that is, the electrode **812***a* and electrode **814***a* and the electrode **812***b* and electrode **814***b*. When one pair of counter electrodes are in a repelling state, the other pair of counter electrodes are in an attracting state. Therefore, compared with the oscillatory actuator **800** shown in **FIG. 82**, the electrostatic force for causing the movable weight **813** to reciprocate becomes double and a greater vibration can be generated.

[**0424**] Note that the electrostatic type oscillatory actuators **800** and **850** shown in **FIG. 82** and **FIG. 83** may further be provided with brake mechanisms explained in the first example and second example of the thirteenth embodiment. Further, the electrodes, the shapes of the waveforms of the drive signals, etc. are not limited to those shown in **FIG. 82** and **FIG. 83**.

[**0425**] [Modification 6]

[**0426**] Further, in the oscillatory actuator, the support member for supporting the movable weight to be able to reciprocate in the air is not limited to a spring, rubber band, etc. For example, the support member may also be a guide rail **967** as shown in **FIG. 84**. In this figure, the movable weight **963***a* is provided with a hole passing through the vertical direction in the figure in its center. The guide rail **967** is provided to pass through the hole of the movable weight **963***a*. One end is fixed to the case **961** in contact with the vibratory member. Even when using such a guide rail **967**, it is possible to support the movable weight **963***a* to be able to reciprocate in the air by the magnetic force generated from the coil **962***a*. Further, this guide rail **967** limits the direction of motion of the movable weight **963***a* and functions to cause linear reciprocation.

[**0427**] [Modification 7]

[**0428**] In the first to 12th embodiments, the operation unit for causing vibration by the vibration generator is not limited to a touch panel or operation keys. For example, it may be the keyboard itself having a plurality of operation keys or a mouse, track ball, tablet, or other of the various types of pointing devices. Further, it is possible to use a photo coupler type, resistance type, contact type, magnetic coupler type, capacity coupler type, or other various types of touch panels.

[**0429**] [Modification 8]

[**0430**] In the first embodiment to the 12th embodiments, the explanation was made of the case of application of the present invention to a PDA or an ATM. The present invention however of course may also be applied to for example a mobile phone, electronic notebook, mobile computer, wristwatch, electronic calculator, remote controller of an electronic device, and other various types of portable electronic devices. Further, the present invention may also be applied to a stationary type computer or a vending machine, cash register, car navigation system, household electric appliance, or other of various types of electronic devices not having portability.

[**0431**] Note that in an electronic device not having portability, it is difficult to envision a mode of use where the user inputs operations by one hand while holding the electronic device by the other hand. Therefore, when causing a location other than the operation unit to vibrate in such an electronic device, it is sufficient to cause part of the housing where part of the body of the user will contact or probably will contact during operation to vibrate.

[**0432**] For example, **FIG. 85** is a perspective view illustrating the appearance of an ATM **150** according to this modification. In the figure, the operation console **151** of the ATM **150** is provided with a liquid crystal display panel **153** over which a transparent touch panel **152** is laid covering the opening. The user performs a touch operation on the touch panel **152** while standing in front of the operation console **151**. Note that the operation console **151** is provided with a cash depositing/dispensing opening **154** or a coin depositing/dispensing opening **155** in addition to the touch panel **152**. Further, the standing surface above the top surface of the ATM **150** is provided with a passbook insertion slot **156** or a card insertion slot **157**.

[**0433**] When the user performs a touch operation on such an ATM **150**, it can be envisioned that the hand other than the hand engaging in the touch operation is placed on the console area **151***a* or the console area **151***b* of the operation console **151**. Therefore, it is sufficient for the operating unit of the ATM **150** to drive a not shown vibration generator in accordance with detection of a touch operation on the touch panel **152** and cause the console area **151***a* or console area

151*b* to vibrate. Further, similarly, when the user performs a touch operation, it can be envisioned that the thighs or part of the torso of the user contact the console edge member **158** provided in front of the operation console **151**. Therefore, the operating unit of the ATM **150** can be configured to cause the console edge member **158** to vibrate in accordance with detection of a touch operation on the touch panel **152**.

1. An electronic device comprising:

an operating unit for receiving an operation input;

a vibration generator for generating vibration which is transmitted to a hand-touched portion of said electronic device; and

vibration control means for controlling said vibration generator, to generate vibration when said vibration control means detects that said operating unit has received said operation input.

2. An electronic device as set forth in claim 1, wherein said vibration generator comprises:

a weight;

a support member for supporting said weight so as to allow it to reciprocate, said support member being connected to said hand-touched portion or to a base member of said vibration generator, and said base member being in contact with said hand-touched portion; and

excitation generating means for generating excitation for supply to said weight, to cause said weight to reciprocate.

3. An electronic device as set forth in claim 1, wherein in a case of driving said vibration generator to generate vibration, said vibration control means applies to said vibration generator a drive signal, to cause said vibration generator or said hand-touched portion to resonate.

4. An electronic device as set forth in claim 1, wherein said vibration generator comprises a motor having an eccentric spindle attached to an end of a shaft.

5. An electronic device as set forth in claim 4, wherein when said motor rotates to generate vibration, said vibration control means controls a rotational speed of said motor to match that of a frequency at which said motor or said hand-touched portion is caused to resonate.

6. An electronic device as set forth in claim 4 or **5**, wherein rotation of said motor is stopped such that said eccentric spindle is stopped each time at a same position.

7. An electronic device as set forth in claim 1,

said device further comprising designating means for designating whether an operation input should result in a report by vibration, and wherein,

in a case that said designating means designates execution of said report by vibration, said vibration control means causes said vibration generator to vibrate when it detects an operation input.

8. An electronic device, comprising:

an operation unit for receiving an operation input;

a vibration generator for generating vibration which is transmitted to said operation unit; and

vibration control means for controlling said vibration generator, in a case of detecting that an operation input to said control unit is received, to generate vibration, and wherein said vibration generator comprises:

a weight;

a support member for supporting said weight so as to allow it to reciprocate, said support member being connected to said operating unit or to a base member of said vibration generator, and said base member being in contact with said operating unit; and

excitation generating means for generating excitation for supply to said weight, to cause said weight to reciprocate.

9. An electronic device as set forth in claim 8, wherein said vibration generator causes said operation unit to vibrate in a direction of contact made by a user, and an opposite direction, said direction of contact being that made at a time of an operation input to said operation unit made by said user.

10. An electronic device as set forth in claim 8, wherein said vibration control means detects that an operation input to said control unit has been received, and then causes said vibration generator to generate vibration for a predetermined period of not more than 1 second.

11. An electronic device as set forth in claim 8 or **10**, wherein, in a case of driving said vibration generator to cause generation of vibration, said vibration control means applies to said vibration generator a drive signal, to cause said vibration generator or said operation unit to resonate.

12. An electronic device as set forth in any one of claims 8 to 11, wherein

said operation unit is a touch panel; and

wherein said vibration generator causes said touch panel or a display means provided for said touch panel to vibrate.

13. An electronic device as set forth in any one of claims 8 to 11, wherein

said operation unit has an operating member; and

wherein said vibration generator causes said operating member to vibrate.

14. An electronic device as set forth in claim 8, further comprising said device further comprising designating means for designating whether an operation input should result in a report by vibration, and wherein,

in a case that said designating means designates execution of said report by vibration, said vibration control means causes said vibration generator to vibrate when it detects an operation input.

15. An electronic device, comprising:

an operation unit for receiving an operation input;

a vibration generator for generating vibration which is transmitted to a user; and

vibration control means for causing, in a case that it is detected that execution of processing instructed by said operation input to said operation unit has ended, said vibration generator to generate vibration.

16. An electronic device as set forth in claim 15, wherein said vibration control means switches a vibration mode of said vibration generator in accordance with a result of an execution of said processing.

17. An electronic device as set forth in claim 15 or **16**, wherein said vibration generator imparts vibration to said operating unit or a hand-touched portion of said electronic device.

18. An electronic device as set forth in claim 15 or **16**, wherein

said vibration generator transmits vibration to said operating unit, and wherein said vibration generator comprises:

a weight;

a support member for supporting said weight so as to allow it to reciprocate, said support member being connected to said operating unit or to a base member of said vibration generator, and said base member being in contact with said operating unit; and

excitation generating means for generating excitation for supply to said weight, to cause said weight to reciprocate.

19. An electronic device as set forth in claim 15 or **16**, wherein

said vibration generator transmits vibration to said hand-touched portion; and wherein said vibration generator comprises:

a weight;

a support member for supporting said weight so as to allow it to reciprocate, said support member being connected to said hand-touched portion or to a base member of said vibration generator, and said base member being in contact with said hand-touched portion; and

excitation generating means for generating excitation for supply to said weight, to cause said weight to reciprocate.

20. An electronic device as set forth in claim 15 or **16**, wherein

said vibration generator transmits vibration to said operating unit or said hand-touched portion of said electronic device; and

wherein said vibration control means, in a case of driving said vibration generator to generate vibration, applies to said vibration generator a drive signal for causing one of said vibration generator, said operating unit, and said hand-touched portion to resonate.

21. An electronic device, comprising:

an operating unit for receiving an operation input;

a first vibration generator for generating vibration which is transmitted to said operating unit;

a second vibration generator for generating vibration which is transmitted to a hand-touched portion of said electronic device; and

vibration control means for, in a case of detecting that an operation input to said operating unit has been received, controlling at least one of said first vibration generator and said second vibration generator designated in advance by a user, to generate vibration.

22. An electronic device, comprising:

an operating unit for receiving an operation input;

a first vibration generator for generating vibration which is transmitted to said operating unit;

a second vibration generator for generating vibration which is transmitted to a hand-touched portion of said electronic device;

detecting means for detecting whether said electronic device is being held by a user; and

vibration control means for, in a case of detecting that an operation input to said operating unit has been received, selecting at least one of said first vibration generator and said second vibration generator in accordance with results of detection by said detecting means and causing the said selected vibration generator to generate vibration.

23. An electronic device as set forth in claim 22, wherein, in a case that said detecting means detects that said electronic device is not being held by said user after detecting that an operation input to said operating unit has been received, said vibration control means causes only said first vibration generator to generate vibration.

24. An electronic device as set forth in claim 21 or **22**, wherein said first vibration generator comprises:

a weight;

a support member for supporting said weight so as to allow it to reciprocate, said support member being connected to said operating unit or to a base member of said vibration generator, and said base member being in contact with said operating unit; and

excitation generating means for generating excitation for supply to said weight, to cause said weight to reciprocate.

25. An electronic device as set forth in claim 21 or **22**, wherein said second vibration generator comprises:

a weight;

a support member supporting said weight so as to allow it to reciprocate, said support member being connected to said hand-touched portion or to a base member of said vibration generator, and said base member being in contact with said hand-touched portion; and

excitation generating means for generating excitation for supply to said weight, to cause said weight to reciprocate.

26. An electronic device as set forth in any one of claims **8**, **18**, and **24**, wherein said vibration generator causes said weight to reciprocate under excitation generated by said excitation generating means and causes vibrational acceleration at said operating unit by a counter force of said reciprocation or transmits to said operating unit vibrational acceleration caused at said base member by a counter force of said reciprocation.

27. An electronic device as set forth in any one of claims **2**, **19**, and **25**, wherein said vibration generator causes said weight to reciprocate under excitation generated by said excitation generating means and causes vibrational acceleration at said hand-touched portion by a counter force of said reciprocation or transmits to said hand-touched portion vibrational acceleration caused at said base member by a counter force of said reciprocation.

28. An electronic device as set forth in any one of claims **8**, **18**, and **24**, wherein said support member is formed using

an elastic body; and wherein one end of said support member is connected to said operating unit or said base member and another end is connected to said weight.

29. An electronic device as set forth in any one of claims **2**, **19**, and **25**, wherein said support member is formed to have an elastic body; and wherein one end of said support member is connected to said hand-touched portion or said base member and another end is connected to said weight.

30. An electronic device as set forth in any one of claims **2**, **8**, **18**, **19**, **24**, and **25**, wherein said vibration generator further comprises a guide mechanism of said weight for causing said weight to linearly reciprocate.

31. An electronic device as set forth in any one of claims **2**, **8**, **18**, **19**, **24**, and **25**, wherein said excitation generating means causes generation of magnetic force as said excitation.

32. An electronic device as set forth in any one of claims **2**, **8**, **19**, **24**, and **25**, wherein said excitation generating means causes generation of electrostatic force as said excitation.

33. An electronic device as set forth in any one of claims **2**, **8**, **18**, **19**, **24**, and **25**, wherein said vibration generator is one which causes said weight to linearly reciprocate and further comprises a resistance imparting member for imparting contact resistance to said weight, said resistance imparting member being in constant contact with a side surface parallel to a direction of reciprocation of said weight performing reciprocation.

34. An electronic device as set forth in any one of claims **2**, **8**, **18**, **19**, **24**, **25**, and **30**, wherein

said vibration generator further comprises a brake means for, in a case that generation of excitation by said excitation generating means has stopped, contacting said weight and causing said weight to stop reciprocating.

35. An electronic device as set forth in any one of claims **2**, **8**, **18**, **19**, **24**, **25**, and **30**, wherein

said vibration generator comprises a coil as said excitation generating means for causing generation of magnetic force, and

said electronic device further comprising short-circuiting means for, in a case that said electronic device stops supplying current to said coil, causing an input end of said coil to short-circuit.

36. An electronic device as set forth in any one of claims **2**, **8**, **18**, **19**, **24**, and **25**, wherein

said excitation generating means is one which causes generation of magnetic force as said excitation; and

wherein said vibration generator houses said weight, said support member, and said excitation generating means in a space sealed by a case having an anti-magnetic effect.

37. An electronic device as set forth in any one of claims **2**, **8**, **18**, **19**, **24**, and **25**, wherein

said excitation generating means causes generation of magnetic force as said excitation; and

wherein said weight is formed using a permanent magnet.

38. An electronic device, comprising:

a display panel over which a touch panel is superposed;

a vibration generator installed in said display panel;

an elastic member formed using an elastic body, for supporting said display panel so as to allow said display panel to vibrate by vibration generated by said vibration generator; and

vibration control means for, in a case of detecting that a touch operation on said touch panel has been received, causing said vibration generator to generate vibration, and

wherein said vibration generator comprises:

a weight;

a support member for supporting said weight so as to allow it to reciprocate, said support member being connected to said display panel or to a base member of said vibration generator and said base member being in contact with said display panel; and

excitation generating means for generating excitation for supply to said weight, to cause said weight to reciprocate.

39. An electronic device as set forth in claim 38, wherein said display panel is attached to a housing of said electronic device through said elastic member.

40. An electronic device as set forth in claim 38, wherein said display panel is attached to a main body of said electronic device through said elastic member.

41. An electronic device, comprising:

a display panel over which a touch panel is superposed;

a vibration generator supporting said display panel, for generating vibration which is transmitted to said display panel; and

vibration control means for, in a case of detecting that a touch operation on said touch panel has been received, causing said vibration generator to generate vibration, and

wherein said vibration generator comprises:

a weight;

a support member for supporting said weight so as to allow it to reciprocate, said support member being connected to said display panel or to a base member of said vibration generator and said base member being in contact with said display panel; and

excitation generating means for generating excitation for supply to said weight excitation, to cause said weight to reciprocate.

42. An electronic device as set forth in claim 41, wherein said display panel is attached to a housing of said electronic device through said vibration generator.

43. An electronic device as set forth in claim 41, wherein said display panel is attached to a main body of said electronic device through said vibration generator.

44. An electronic device as set forth in claim 38 or **41**, wherein said vibration generator causes said weight to reciprocate under excitation generated by said excitation generating means and causes vibrational acceleration at said display panel by a counter force of said reciprocation or transmits to said display panel vibrational acceleration caused at said base member by a counter force of said reciprocation.

45. An electronic device as set forth in claim 38 or **41**, wherein said support member is formed using an elastic body; and wherein one end of said support member is connected to said display panel or said base member and another end is connected to said weight.

46. An electronic device as set forth in claim 38 or **41**, wherein said vibration generator causes said display panel to vibrate in a direction perpendicular to a surface of said display panel.

47. An electronic device as set forth in claim 38 or **41**, wherein said vibration control means detects that an operation input to said touch panel has been received, and then causes said vibration generator to generate vibration for a predetermined time of not more than 1 second.

48. An electronic device as set forth in any one of claims **38**, **41**, and **47**, wherein, in a case of driving said vibration generator to cause vibration, said vibration control means applies to said vibration generator a drive signal for causing said vibration generator or said display panel to resonate.

49. An electronic device, comprising:

a display;

a touch panel covering a display screen of said display;

a vibration generator provided between said display and said touch panel, for supporting said touch panel on said display screen and transmitting vibration to said touch panel; and

vibration control means for, in a case of detecting that a touch operation on said touch panel has been received, causing said vibration generator to generate vibration.

50. An electronic device, comprising:

a display;

a touch panel covering a display screen of said display;

a vibration generator installed at said touch panel for transmitting vibration to said touch panel;

a vibration absorbing member provided between said display and said touch panel for absorbing, from among vibration components generated from said vibration generator, a vibration component which is about to be transferred to said display; and

vibration control means for, in case of detecting that a touch operation on said touch panel has been received, causing said vibration generator to generate vibration.

51. An electronic device as set forth in claim 49 or **50**, wherein said vibration generator comprises:

a weight;

a support member for supporting said weight so as to allow it to reciprocate, said support member being connected to said touch panel or to a base member of said vibration generator, and said base member being in contact with said touch panel; and

excitation generating means for generating excitation for supply to said weight excitation, to cause said weight to reciprocate.

52. An electronic device as set forth in claim 38 or **41**, wherein said vibration generator causes said weight to reciprocate under excitation generated by said excitation generating means and causes vibrational acceleration at said touch panel by a counter force of said reciprocation or transmits to said touch panel vibrational acceleration caused at said base member by a counter force of said reciprocation.

53. An electronic device as set forth in claim 51, wherein said support member is formed using an elastic body; and wherein one end of said support member is connected to said touch panel or said base member and another end is connected to said weight.

54. An electronic device as set forth in claim 50, wherein an said vibration absorbing member uses an elastic body.

55. An electronic device as set forth in claim 50 or **54**, wherein said vibration absorption member is installed at a position not overlapping said display screen.

56. An electronic device as set forth in claim 49 or **54**, wherein said vibration generator is installed at a position not overlapping said display screen.

57. An electronic device as set forth in any one of claims 49 to 52 and **56**, wherein said vibration generator causes said touch panel to vibrate in a direction perpendicular to a front surface of said touch panel.

58. An electronic device as set forth in claim 49 or **50**, wherein said vibration control means detects that a touch operation on said touch panel has been received, and then causes said vibration generator to generate vibration for a predetermined period of not more than 1 second.

59. An electronic device as set forth in any one of claims **49**, **50**, and **58**, wherein, in a case of driving said vibration generator to cause vibration, said vibration control means applies to said vibration generator a drive signal for causing said vibration generator or said touch signal to resonate.

60. An electronic device, comprising:

an operating unit for receiving an operation input;

a vibration generator at least a part of which is provided exposed to the outside from a housing of said electronic device and transmitting vibration directly to said user; and

vibration control means for, in a case of detecting that an operation input to said operating unit has been received, causing said vibration generator to generate vibration.

61. An electronic device, comprising:

an operating unit for receiving an operation input;

a vibration generator for generating vibration which is transmitted to a part of a housing of said electronic device, while said part of said housing is different from said operating unit; and

vibration control means for, in a case of detecting that an operation input to said operating unit has been received, identifying a type of operation input and causing said vibration generator to generate vibration by a vibration mode linked with said type of operation input.

62. An electronic device as set forth in claim 61, wherein

said operating unit is a touch panel; and

wherein said vibration control means, in a case of detecting that a touch operation on said touch panel has been received, detects a touched position of said touch operation on said touch panel and causes said vibration generator to generate vibration by a vibration mode linked with said touched position.

63. An electronic device as set forth in claim 61, wherein

said operating unit has a plurality of operating members; and

wherein, in a case of detecting that an operation input to said operating unit has been received, said vibration control means identifies a type of operated operating member and causes said vibration generator to generate vibration by a vibration mode linked with said type of said operated operating member.

64. An electronic device as set forth in claim 61, wherein, in a case of detecting that an operation input to said operating unit has been received, said vibration control means identifies a type of instruction indicated by said operation input and causes said vibration generator to generate vibration by a vibration mode linked with said type of said instruction.

65. An electronic device, comprising:

an operating unit for receiving an operation input;

a vibration generator for generating vibration which is transmitted to a part of a housing of said electronic device, while said part of said housing given vibration is different from said operating unit;

changing means for changing a value of a parameter for controlling said electronic device in accordance with an operation input to said operating unit; and

vibration control means for, in a case of detecting that an operation input for changing a value of a parameter has been received at said operating unit, causing said vibration generator to generate vibration by a vibration mode linked with said value of said parameter changed by said changing means in response to said operation input.

66. An electronic device as set forth in claim 61 or **65**, wherein said vibration generator comprises:

a weight;

a support member for supporting said weight so as to allow it to reciprocate, said support member being connected to said part of said housing or to a base member of said vibration generator, and said base member being in contact with said part of said housing; and

excitation generating means for generating excitation for supply to said weight, to cause said weight to reciprocate.

67. An electronic device as set forth in claim 66, wherein said vibration generator causes said weight to reciprocate under excitation generated by said excitation generating means and causes vibrational acceleration at said part of said housing by a counter force of said reciprocation or transmits to said part of said housing vibrational acceleration caused at said base member by a counter force of said reciprocation.

68. An electronic device as set forth in claim 66, wherein said support member is formed using an elastic body; and wherein one end of said support member is connected to said part of said housing or said base member and another end is connected to said weight.

69. An electronic device as set forth in any one of claims 61 to 65, wherein, in a case of driving said vibration generator to cause vibration, said vibration control means applies to said vibration generator a drive signal for causing said vibration generator or said part of said housing to resonate.

70. An electronic device, comprising:

an operating unit for receiving an operation input;

a vibration generator for generating vibration which is transmitted to said operating unit; and

vibration control means for, in a case of detecting that an operation input has been received at said operating unit, identifying a type of operation input and causing said vibration generator to generate vibration by a vibration mode linked with said type of said operation input, and

wherein said vibration generator comprises:

a weight;

a support member for supporting said weight so as to allow it to reciprocate, said support member being connected to said operating unit or to a base member of said vibration generator, and said member being in contact with said operating unit; and

excitation generating means for generating excitation for supply to said weight, to cause said weight to reciprocate.

71. An electronic device as set forth in claim 70, wherein

said operating unit is a touch panel; and

wherein said vibration control means, in a case of detecting that a touch operation has been received at said touch panel, detects a touched position of said touch operation on said touch panel and causes said vibration generator to generate vibration by a vibration mode linked with said touched position.

72. An electronic device as set forth in claim 70, wherein

said operating unit has a plurality of operating members; and

wherein said vibration control means, in a case of detecting that an operation input to said operating unit has been received, identifies a type of operating member operated and causes said vibration generator to generate by a vibration mode linked with said type of operating member operated.

73. An electronic device as set forth in claim 70, wherein, in a case of detecting that an operation input to said operating unit has been received, said vibration control means identifies a type of instruction indicated by said operation input and causes said vibration generator to generate vibration by a vibration mode linked with said type of instruction.

74. An electronic device, comprising:

an operating unit for receiving an operation input;

a vibration generator for generating vibration which is transmitted to said operating unit;

changing means for changing a value of a parameter for controlling said electronic device in accordance with said operation input to said operating unit; and

vibration control means for causing, in a case of detecting that an operation input for changing a value of a parameter has been received at said operating unit, said vibration generator to cause vibration by a vibration

mode linked with said value of said parameter changed by said changing means in response to said operation input, and

wherein said vibration generator comprises:

a weight;

a support member supporting said weight so as to allow it to reciprocate, said support member being connected to said operating unit or to a base member of said vibration generator, and said member being in contact with said operating unit; and

excitation generating means for generating excitation for supply to said weight excitation, to cause said weight to reciprocate.

75. An electronic device as set forth in claim 70 or **74**, wherein said vibration generator causes said weight to reciprocate under excitation generated by said excitation generating means and causes vibrational acceleration at said operating unit by a counter force of said reciprocation or transmits to said hand-touched portion vibrational acceleration caused at said base member by a counter force of said reciprocation.

76. An electronic device as set forth in claim 70 or **74**, wherein said support member is formed using an elastic body; and wherein one end of said support member is connected to said operating unit or said base member, and another end is connected to said weight.

77. An electronic device as set forth in any one of claims 70 to 74, wherein said vibration generator causes said operating unit to vibrate in a direction of contact made by a user and in an opposite direction, said direction of contact being that made at a time of operation input to said operating unit by said user.

78. An electronic device as set forth in any one of claims 70 to 74, wherein said vibration control means detects that an operation input to said operating unit has been received, and then causes said vibration generator to generate vibration for a predetermined period of not more than 1 second.

79. An electronic device as set forth in any one of claims 70 to 74 and **78**, wherein, in a case of driving said vibration generator to cause generation of vibration, said vibration control means applies to said vibration generator a drive signal for causing said vibration generator or said operating unit to resonate.

80. An electronic device, comprising:

an operating member for continuously changing a value of a parameter for controlling said electronic device;

a vibration generator for generating vibration which is transmitted to a user;

changing means for changing said value of said parameter based on the operated amount of said operating member; and

vibration control means for, in a case of detecting that an operation input to said operating member has been received, causing said vibration generator to generate vibration by a vibration mode linked to said value of said parameter changed by said changing means in response to said operation.

81. An electronic device, comprising:

an operating unit for receiving an operation input and detecting a level of pressure of said operation input;

a vibration generator for generating vibration which is transmitted to a user; and

vibration control means for, in a case of detecting that an operation input to said operating unit has been received, causing said vibration generator to generate vibration by a vibration mode linked with a level of pressure of said operation input detected by said operating unit.

82. An electronic device as set forth in claim 81, wherein, in a case that a fingertip of the operator or an operation tool touches said operating unit, said operating unit detects that said fingertip or control tool has pressed said operating unit with a force greater than a predetermined level of pressure as a different level of pressure.

83. An electronic device as set forth in claim 81 or **82**, wherein said operating unit is a touch panel.

84. An electronic device as set forth in claim 81, wherein said operating unit is a combination of a first touch panel for detecting that either a fingertip of said user or an operation tool touches said operating unit and receiving this as a touch operation and a second touch panel for detecting that either said fingertip or operation tool has pressed said operating unit with a force greater than a predetermined level of pressure and receiving this as a touch operation, said first touch panel and said second touch panel overlapping each other.

85. An electronic device, comprising:

an operating unit for receiving an operation input;

sound producing means for providing an audio report to a user;

a vibration generator for generating vibration which is transmitted to said user; and

report control means for, in a case of detecting that an operation input to said operating unit has been received, reporting to said user that said operation input has been received using at least one of said sound producing means, and said vibration generator being designated by said user in advance.

86. An electronic device, comprising:

an operating unit for receiving an operation input;

sound producing means for providing an audio report to a user;

a vibration generator for generating vibration which is transmitted to said user;

measuring means for measuring a sound level of surroundings of said electronic device; and

report control means for, in a case of detecting that an operation input to said operating unit has been received, selecting at least one of said sound producing means and said vibration generator based on measurement results of said measuring means and reporting to said user that an operation input has been received using said one selected.

87. An electronic device as set forth in claim 86, wherein, in a case of detecting that an amount of sound measured by said measuring means is above an amount of sound set in advance after detecting that an operation input to said operating unit has been received, said report control means

reports to said user that said operation input has been received by using at least said vibration generator.

88. An electronic device, comprising:

an operating unit for receiving an operation input;

sound producing means for providing an audio report to a user;

a vibration generator for generating vibration which is transmitted to said user;

receiving means for receiving a signal designating at least one of said sound generating means or vibration generator from a base station covering an area in which said electronic device is located; and

report control means for, in a case of detecting that an operation input to said operating unit has been received, reporting to said user that said operation input has been received using at least one of said sound producing means or said vibration generator designated by a signal received by said receiving means.

89. An electronic device, comprising:

an operating unit for receiving an operation input;

sound producing means for providing an audio report to a user;

a vibration generator for generating vibration which is transmitted to said user;

acquiring means for acquiring location information of said electronic device; and

report control means for, in a case of detecting that an operation input to said operating unit has been received, selecting at least one of said sound producing means and said vibration generator based on location information acquired by said acquiring means and using said selected means to report to said user that said operation input has been received.

90. An electronic device as set forth in claim 89, wherein, in a case that said electronic device is located in a preset area based on location information acquired by said acquiring means after detecting that an operation input to said operating unit has been received, said report control means reports to said user that said operation input has been received using only said vibration generator.

91. An electronic device, comprising:

an operating unit for receiving an operation input;

a vibration generator capable of transmitting vibration to a user and simultaneously causing generation of sound; and

drive control means for, in a case of detecting that an operation input to said operating unit has been received and causing said vibration generator to generate both vibration and sound, synthesizing a drive signal for driving said vibration generator to cause vibration and an audio signal for driving said vibration generator to cause sound, and for applying said synthesized signal to said vibration generator.

92. An electronic device as set forth in any one of claims **80**, **81**, **85**, **86**, **88**, **89**, and **91**, wherein

said vibration generator gives vibration to said user by causing one of said members comprising said electronic device to vibrate; and

wherein said vibration generator comprises:

a weight;

a support member for supporting said weight so as to allow it to reciprocate, said support member being connected to a vibrated member of said electronic device or to a base member of said vibration generator, and said base member being in contact with said vibratory member; and

excitation generating means for generating excitation for supply to said weight excitation, to cause said weight to reciprocate.

93. An electronic device as set forth in claim 92, wherein said vibration generator causes said weight to reciprocate under excitation generated by said excitation generating means and causes vibrational acceleration at said vibratory member by a counter force of said reciprocation or transmits to said vibratory member vibrational acceleration caused at said base member by a counter force of said reciprocation.

94. An electronic device as set forth in claim 92, wherein said support member is formed using an elastic body; and wherein one end of said support member is connected to said vibratory member or said base member and another end is connected to said weight.

95. An electronic device, comprising:

an operation panel for receiving a touch operation;

a plurality of vibration generators for transmitting vibration to said operation panel;

detecting means for detecting a touched position on said operation panel; and

vibration control means for, in a case of detecting that a touch operation to said operation panel has been received, selecting at least one of said plurality of vibration generators based on a touched position of said touch operation detected by said detecting means and causing said selected vibration generator to generate vibration.

96. An electronic device, comprising:

an operation panel for receiving a touch operation;

a plurality of vibration generators for transmitting vibration to said operation panel;

detecting means for detecting a touched position on said operation panel;

generating means for, in a case of detecting that a touch operation to said operation panel has been received, generating drive signals for driving each of said plurality of vibration generators so that an amplitude of vibration caused at a touched position in said touch operation detected by said detecting means is amplified as a result of mutual interference of oscillatory waves generated by each of said plurality of vibration generators; and

vibration control means for applying drive signals generated by said generating means to corresponding vibration generators to cause said vibration generators to generate vibration.

97. An electronic device as set forth in claim 96, wherein, in a case of detecting that a touch operation on said operation panel has been received, said generating means adjusts phases of drive signals for driving said plurality of vibration generators so that amplitudes of vibration caused at a touched position in said touch operation detected by said detecting means is amplified by mutual interference of oscillatory waves generated by each of said plurality of vibration generators.

98. An electronic device as set forth in claim 96, wherein, in a case of detecting that a touch operation on said operation panel has been received, said generating means generates drive signals for driving said plurality of vibration generators so that amplitudes of vibration caused at said position touched in said touch operation detected by said detecting means become greatest by mutual interference of oscillatory waves generated by each of said plurality of vibration generators.

99. An electronic device, comprising:

an operation panel over which a deformation layer deformable by vibration is laminated;

a plurality of vibration generators for transmitting vibration to said operation panel;

detecting means for detecting a touched position on said operation panel;

generating means for, in a case of detecting that a touch operation to said operation panel has been received, generating drive signals for driving said plurality of vibration generators so that a thickness of the deformation layer at said touched position of said touch operation detected by said detecting means becomes thinner or thicker than that of a time of non-touching as a result of mutual interference of oscillatory waves generated from said plurality of vibration generators; and

vibration control means for applying drive signals generated by said generating means to corresponding vibration generators and causing said vibration generators to generate vibration.

100. An electronic device as set forth in claim 99, wherein said deformation layer is formed using any one of a liquid, gel, or particulate substance.

101. An electronic device as set forth in any one of claims **95**, **96**, and **99**, wherein said vibration generator comprises:

a weight;

a support member for supporting said weight so as to allow it to reciprocate, said support member being connected to said operating unit or to a base member of said vibration generator, and said base member being in contact with said operating unit; and

excitation generating means for generating excitation for supply to said weight, to cause said weight to reciprocate.

102. An electronic device as set forth in claim 101, wherein said vibration generator causes said weight to reciprocate under excitation generated by said excitation generating means and causes vibrational acceleration at said operation panel by a counter force of said reciprocation, or transmits to said operation panel vibrational acceleration caused at said base member by a counter force of said reciprocation.

103. An electronic device as set forth in claim 101, wherein said support member is formed using an elastic body; and wherein one end of said support member is connected to said operation panel or said base member and another end is connected to said weight.

104. An electronic device as set forth in any one of claims **38**, **41**, **51**, **66**, **70**, **74**, **92**, and **101**, wherein said vibration generator further comprises a guide mechanism for said weight to cause said weight to linearly reciprocate.

105. An electronic device as set forth in any one of claims **38**, **41**, **51**, **66**, **70**, **74**, **92**, and **101**, wherein said excitation generating means generates magnetic force as said excitation.

106. An electronic device as set forth in any one of claims **38**, **41**, **51**, **66**, **70**, **74**, **92**, and **101**, wherein said excitation generating means generates electrostatic force as said excitation.

107. An electronic device as set forth in any one of claims **38**, **41**, **51**, **66**, **70**, **74**, **92**, and **101**, wherein said vibration generator causes said weight to linearly reciprocate and further comprises a resistance imparting member imparting contact resistance to said weight, said resistance imparting member being in constant contact with a side surface parallel to a direction of reciprocation of said weight performing reciprocation.

108. An electronic device as set forth in any one of claims **38**, **41**, **51**, **66**, **70**, **74**, **92**, and **101**, wherein said vibration generator further comprises brake means for, in a case that generation of excitation from said excitation generating means has stopped, contacting itself with said weight and causing said weight to stop reciprocating.

109. An electronic device as set forth in any one of claims **38**, **41**, **51**, **66**, **70**, **74**, **92**, and **101**, wherein

said vibration generator comprises, as said excitation generating means, a coil for generating magnetic force, and said electronic device further comprising a short-circuiting means for, in a case of stopping supply of current to said coil, causing said input end of said coil to short-circuit.

110. An electronic device as set forth in any one of claims **38**, **41**, **51**, **66**, **70**, **74**, **92**, and **101**, wherein

said excitation generating means generates magnetic force as said excitation; and

wherein said vibration generator houses said weight, said support member, and said excitation generating means in a space sealed by a case having an anti-magnetic effect.

111. An electronic device as set forth in any one of claims **38**, **41**, **51**, **66**, **70**, **74**, **92**, and **101**, wherein

said excitation generating means generates magnetic force as said excitation; and

wherein said weight is formed using a permanent magnet.

112. A vibration generator, comprising:

a weight;

support means for supporting said weight so as to allow it to linearly reciprocate, said support member being connected to a vibratory member to which vibration is imparted by said vibration generator or to a base

member of said vibration generator, and said base member being in contact with said vibratory member;

excitation generating means for generating excitation for supply to said weight, to cause said weight to reciprocate; and

a resistance imparting member for imparting contact resistance to said weight, said resistance imparting member being in constant contact with a side surface parallel to a direction of reciprocation of said weight linearly reciprocating by excitation generated by said excitation generating means.

113. A vibration generator as set forth in claim 112, wherein said resistance imparting member surrounds all side surfaces of said weight parallel to said direction of reciprocation.

114. A vibration generator as set forth in claim 112, wherein a plurality of said resistance imparting members are provided at equal intervals, thereby surrounding all side surfaces of said weight parallel to said direction of reciprocation.

115. A vibration generator, comprising:

a weight;

a support member for supporting said weight and so as to allow it to reciprocate, said support member being connected to a vibratory member to which vibration is imparted by said vibration generator, or to a base member of said vibration generator, and said base member being in contact with said vibratory member;

excitation generating means for generating excitation for supply to said weight, to cause said weight to reciprocate; and

brake means for being brought into contact with said weight, in a case that said generation of excitation by said excitation generating means has stopped, and causing said reciprocation of said weight to stop.

116. A vibration generator as set forth in claim 115, further comprising a guide mechanism of said weight which causes said weight to linearly reciprocate.

117. A vibration generator as set forth in claim 112 or **115**, which causes said weight to linearly reciprocate under excitation generated by said excitation generating means and causes vibrational acceleration at said vibratory member by a counter force of said reciprocation or transmits to said vibratory member vibrational acceleration caused at said base member by a counter force of said reciprocation.

118. A vibration generator as set forth in claim 112 or **115**, wherein said support member is formed using an elastic body; and wherein one end of said support member is connected to said vibratory member or to said base member, and another end is connected to said weight.

119. A vibration generator as set forth in claim 112 or **115**, wherein said kinetic force generating means generates magnetic force as said excitation.

120. A vibration generator as set forth in claim 112 or **115**, wherein said kinetic force generating means generates of electrostatic force as said excitation.

121. A vibration generator as set forth in claim 112 or **115**, wherein

said excitation generating means generates magnetic force as said excitation; and

wherein said weight is formed using a permanent magnet.

122. A vibration-type reporting method in an electronic device, comprising a step of:

in a case of detecting that an operation input to an operating unit is received, causing a vibration generator provided in said electronic device to vibrate and thereby causing said hand-touched portion of said electronic device to vibrate.

123. A vibration-type reporting method in an electronic device, comprising a step of:

in a case of detecting that an operation input to an operating unit is received, driving a vibration generator provided in said electronic device, causing a weight to reciprocate at said vibration generator, and thereby causing said operating unit to vibrate, said weight being able to reciprocate by being supported by a support member connected with said operating unit or with a base member of said vibration generator, and said base member being in contact with said operating unit.

124. A vibration-type reporting method in an electronic device, comprising a step of:

in a case of detecting that execution of processing instructed by an operation input to an operating unit has ended, causing a vibration generator provided in said electronic device to generate vibration and thereby transmitting vibration to a user.

125. A vibration-type reporting method in an electronic device, comprising a step of:

in a case of detecting that an operation input to an operating unit has been received, causing at least one of a first and second vibration generators designated in advance by a user to vibrate and thereby transmitting vibration to said user, said first vibration generator transmitting vibration to said operating unit, a second vibration generator transmitting vibration to a hand-touched portion of said electronic device, both said first and second vibration generators being provided in said electronic device.

126. A vibration-type reporting method in an electronic device, comprising a step of:

in a case of detecting that an operation input to an operating unit has been received, selecting at least one of a first and second vibration generators in accordance with results of detection by a censor for detecting whether said electronic device is being held by a user, causing said selected vibration generator to generate vibration, and thereby transmitting vibration to said user, said first vibration generator transmitting vibration to said operating unit, said second vibration generator transmitting vibration to a hand-touched portion of said electronic device, and both said first and second vibration generators being provided in said electronic device.

127. A vibration-type reporting method in an electronic device, comprising a step of:

in a case of detecting that an operation input to an operating unit has been received, identifying a type of said operation input, causing a vibration generator provided in said electronic device to generate vibration by a vibration mode linked with said type of said operation input, and thereby causing a part of a housing

of said electronic device to vibrate, while said part of said housing is different from said operating unit.

128. A vibration-type reporting method in an electronic device, comprising a step of:

in a case of detecting that an operation input to an operating unit has been received, identifying a type of operation input, driving a vibration generator provided in said electronic device, causing a weight to reciprocate at said vibration generator, and thereby vibrating said operating unit, said weight being able to reciprocate by being supported by a support member connected to said operating unit or to a base member of said vibration generator, and said base member being in contact with said operating unit.

129. A vibration-type reporting method in an electronic device, comprising a step of:

in a case of detecting that an operation input to an operating unit has been received and causing a vibration generator provided in said electronic device to generate both vibration and sound, synthesizing a drive signal for driving said vibration generator to generate vibration and an audio signal for driving said vibration generator to generate sound, and using said synthesized signal to drive said vibration generator to transmit vibration to a user, and simultaneously to generate sound.

130. A vibration-type reporting method in an electronic device, comprising a step of:

in a case of detecting that a touch operation to an operation panel has been received, detecting a touched position, selecting based on said touched position at least one of a plurality of vibration generators provided in said electronic device, and causing said selected vibration generator to generate vibration.

131. A vibration-type reporting method in an electronic device, comprising a step of:

in a case of detecting that a touch operation to an operation panel has been received, detecting a touched position and generating drive signals to be applied to a plurality of vibration generators so that an amplitude of vibration caused at said touched position of said operation panel is amplified as a result of mutual interference of oscillatory waves generated by each of said plurality of vibration generators provided in said electronic device, and driving said vibration generators to transmit vibration to a user.

132. A report control method for an electronic device, comprising a step of:

in a case of detecting that an operation input to an operating unit has been received, reporting to a user that said operation input has been received using at least one of sound producing means and a vibration generator designated by said user in advance, both said sound producing means for providing an audio report to said user and said vibration generator for transmitting vibration to said user being provided in said electronic device.

133. A report control method for an electronic device, comprising a step of:

in a case of detecting that an operation input to an operating unit has been received, selecting at least one of sound producing means and a vibration generator based on measurement results of measuring means for measuring a sound level of surroundings of said electronic device, and reporting by way of one of said selected sound producing means or said vibration generator, that said operation input has been received, both said sound producing means for providing an audio report to said user and said vibration generator for transmitting vibration to said user being provided in said electronic device.

134. A report control method for an electronic device, comprising a step of:

in a case of detecting that an operation input to an operating unit is received, reporting to a user that said operation input has been received using at least one of sound producing means and a vibration generator designated by a signal received from a base station covering an area in which said electronic device is located, both said sound producing means for providing an audio report to said user and said vibration generator for transmitting vibration to said user being provided in said electronic device.

135. A report control method for an electronic device, comprising a step of:

in a case of detecting that an operation input to an operating unit has been received, selecting at least one of sound producing means and a vibration generator based on location information of said electronic device, and reporting, using said at least one of selected means, to said user that said operation input has been received, both said sound producing means for providing an audio report to said user and said vibration generator for transmitting vibration to said user being provided in said electronic device.

* * * * *