US005805140A

United States Patent [19]

Rosenberg et al.

[11] **Patent Number: 5,805,140**

[45] **Date of Patent: Sep. 8, 1998**

[54] **HIGH BANDWIDTH FORCE FEEDBACK INTERFACE USING VOICE COILS AND FLEXURES**

[75] Inventors: **Louis B. Rosenberg**, Pleasanton; **Bruce M. Schena**, Menlo Park, both of Calif.

[73] Assignee: **Immersion Corporation**, San Jose, Calif.

[21] Appl. No.: **560,091**

[22] Filed: **Nov. 17, 1995**

Related U.S. Application Data

[63] Continuation-in-part of Ser. No. 461,170, Jun. 5, 1995, Pat. No. 5,576,727, which is a continuation of Ser. No. 92,974, Jul. 16, 1993, and a continuation-in-part of Ser. No. 374,288, Jan. 18, 1995.

[51] **Int. Cl.**[6] **G09G 5/08**; G06F 3/033

[52] **U.S. Cl.** **345/161**; 345/156

[58] **Field of Search** ..... 345/156, 157, 345/161, 184; 434/45; 463/30, 38; 340/407.2; 395/99; 318/568.11, 568.25; 244/233; 74/471 XY

[56] **References Cited**

U.S. PATENT DOCUMENTS

2,906,179	9/1959	Bower	90/13.5
3,490,059	1/1970	Paulsen et al.	73/133
3,531,868	10/1970	Stevenson	33/174
3,795,150	3/1974	Eckhardt	74/5.4
3,875,488	4/1975	Crocker et al.	318/68
3,890,958	6/1975	Fister et al.	128/2 S

(List continued on next page.)

FOREIGN PATENT DOCUMENTS

4-34610	2/1992	Japan .
2254911	10/1992	United Kingdom .
WO9502233	1/1995	WIPO .
WO9502801	1/1995	WIPO .
WO9520787	8/1995	WIPO .
WO9520788	8/1995	WIPO .
WO9532459	11/1995	WIPO .
WO9616397	5/1996	WIPO .
WO9622591	7/1996	WIPO .
WO9642078	12/1996	WIPO .
WO9712357	4/1997	WIPO .

OTHER PUBLICATIONS

Buttolo et al., "Hard Disk Actuators for Mini Teleoperation", Proceedings SPIE Telemanipulator and Telepresence Technologies, Oct. 31, 1994, pp. 1–8.

Kilpatrick, Paul Jerome, "The Use of a Kinesthetic Supplement in an Interactive Graphics System", University of North Carolina at Chapel Hill, 1976, pp. 1–175.

(List continued on next page.)

Primary Examiner—Jeffrey Brier
Attorney, Agent, or Firm—James R. Riegel

[57] **ABSTRACT**

A method and apparatus for interfacing the motion of a user-manipulable object with an electrical or computer system includes a user object physically contacted by a user. A gimbal mechanism is coupled to the user object, such as a joystick or a medical tool, and provides at least two degrees of freedom to the user object. The gimbal mechanism preferably includes multiple members, at least two of which are formed as a unitary member which provides flex between the selected members. An actuator applies a force along a degree of freedom to the user object in response to electrical signals produced by the computer system. A sensor detects a position of the user object along the degree of freedom and outputs sensor signals to the computer system. Another embodiment includes a host computer system and a local microprocessor, separate from the host computer, for communicating with the host computer and controlling the forces output by the actuators according to a processor subroutine selected in accordance with a host command, sensor signals, and timing information. Another embodiment of the interface apparatus uses voice coil actuators that produce forces in either linear or rotary degrees of freedom using currents applied in a magnetic fields. A friction drive mechanism of the present invention can be coupled between an actuator and a gimbal mechanism. Force from the actuator is transmitted to the gimbal mechanism through frictional contact of members of the friction drive mechanism.

79 Claims, 25 Drawing Sheets

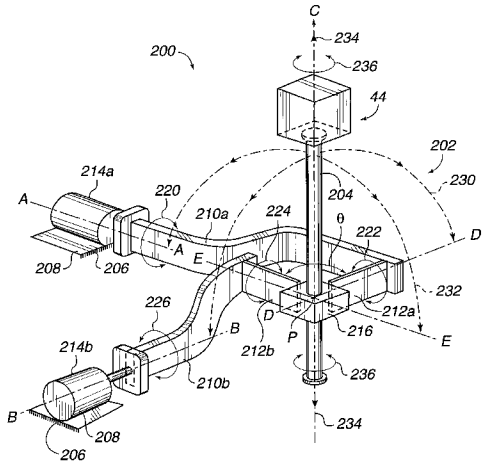

U.S. PATENT DOCUMENTS

3,944,798	3/1976	Eaton	235/151.3
4,148,014	4/1979	Burson	340/709
4,216,467	8/1980	Colston	340/365 L
4,398,889	8/1983	Lam et al.	434/45
4,436,188	3/1984	Jones	188/378
4,448,083	5/1984	Hayashi	73/862.04
4,477,043	10/1984	Repperger	244/223
4,477,973	10/1984	Davies	33/1 CC
4,550,221	10/1985	Mabusth	178/18
4,550,617	11/1985	Fraignier et al.	73/862.04
4,571,834	2/1986	Fraser et al.	33/1 PT
4,593,470	6/1986	Davies	33/1 CC
4,601,206	7/1986	Watson	73/514
4,632,341	12/1986	Repperger et al.	244/230
4,638,798	1/1987	Shelden et al.	128/303 B
4,653,011	3/1987	Iwano	364/513
4,654,648	3/1987	Herrington et al.	340/710
4,676,002	6/1987	Slocum	33/1 MP
4,679,331	7/1987	Koontz	33/551
4,688,983	8/1987	Lindbom	414/735
4,689,449	8/1987	Rosen	200/6
4,703,443	10/1987	Moriyasu	364/559
4,704,909	11/1987	Grahn et al.	73/862.04
4,750,487	6/1988	Zanetti	128/303 B
4,769,763	9/1988	Trieb et al.	364/559
4,775,289	10/1988	Kazerooni	414/735
4,787,051	11/1988	Olson	364/518
4,791,934	12/1988	Brunnett	128/653
4,798,919	1/1989	Miessler et al.	178/18
4,800,721	1/1989	Cemenska et al.	60/393
4,803,413	2/1989	Kendig et al.	318/648
4,811,608	3/1989	Hilton	73/862.04
4,819,195	4/1989	Bell et al.	364/571.05
4,839,838	6/1989	LaBiche et al.	364/709.11
4,849,692	7/1989	Blood	324/208
4,879,556	11/1989	Duimel	341/20
4,888,877	12/1989	Enderle et al.	33/559
4,891,889	1/1990	Tomelleri	33/503
4,907,970	3/1990	Meenen, Jr.	434/45
4,907,973	3/1990	Hon	434/262
4,942,545	7/1990	Sapia	364/571.01
4,945,305	7/1990	Blood	324/207.17
4,945,501	7/1990	Bell et al.	364/571.05
4,961,138	10/1990	Gorniak	364/200
4,961,267	10/1990	Herzog	33/503
4,962,591	10/1990	Zeller et al.	33/502
4,982,504	1/1991	Söderberg et al.	33/502
4,983,786	1/1991	Stevens et al.	178/18
5,007,085	4/1991	Greanias et al.	380/25
5,007,300	4/1991	Siva	74/471 XY
5,040,306	8/1991	McMurtry et al.	33/556
5,044,956	9/1991	Behensky et al.	434/45
5,050,608	9/1991	Watanabe et al.	128/653 R
5,072,361	12/1991	Davies et al.	364/167.01
5,088,046	2/1992	McMurtry et al.	364/474.03
5,088,055	2/1992	Oyama	364/560
5,095,303	3/1992	Clark et al.	340/710
5,103,404	4/1992	McIntosh	318/568.22
5,107,080	4/1992	Rosen	200/6
5,116,051	5/1992	Moncrief et al.	273/448 B
5,126,948	6/1992	Mitchell et al.	364/474.03
5,128,671	7/1992	Thomas, Jr.	341/20
5,131,844	7/1992	Marinaccio et al.	433/72
5,132,672	7/1992	Clark	340/710
5,139,261	8/1992	Openiano	273/148 B
5,142,506	8/1992	Edwards	367/127
5,142,931	9/1992	Menahem	74/471 XY
5,143,505	9/1992	Burdea et al.	414/5
5,148,377	9/1992	McDonald	364/560
5,178,012	1/1993	Culp	73/510
5,181,181	1/1993	Glynn	364/566
5,182,557	1/1993	Lang	341/20
5,184,306	2/1993	Erdman et al.	364/474.05
5,184,319	2/1993	Kramer	364/806
5,185,561	2/1993	Good et al.	318/432
5,186,629	2/1993	Rohen	434/114
5,187,874	2/1993	Takahashi et al.	33/502
5,189,806	3/1993	McMurtry et al.	33/503
5,204,824	4/1993	Fujimaki	364/474.03
5,209,131	5/1993	Baxter	73/865.8
5,220,260	6/1993	Schuler	318/561
5,223,776	6/1993	Radke et al.	318/568.1
5,228,356	7/1993	Chuang	74/471 XY
5,230,623	7/1993	Guthrie et al.	433/72
5,243,266	9/1993	Kasagami et al.	318/568.1
5,251,127	10/1993	Raab	364/413.13
5,251,156	10/1993	Heier et al.	364/559
5,259,120	11/1993	Chapman et al.	33/502
5,259,894	11/1993	Sampson	156/64
5,262,777	11/1993	Low et al.	341/20
5,264,768	11/1993	Gregory et al.	318/561
5,275,565	1/1994	Moncrief	434/29
5,296,846	3/1994	Ledley	345/161
5,351,692	10/1994	Dow et al.	128/662.06
5,354,162	10/1994	Burdea et al.	414/5
5,379,663	1/1995	Hara	74/471 XY
5,384,460	1/1995	Tseng	250/231.14
5,389,865	2/1995	Jacobus et al.	318/568.11
5,396,266	3/1995	Brimhall	345/161
5,396,267	3/1995	Bouton	345/168
5,397,323	3/1995	Taylor et al.	606/130
5,402,582	4/1995	Raab	33/503
5,405,152	4/1995	Katanics et al.	273/438
5,412,880	5/1995	Raab	33/503
5,414,337	5/1995	Schuler	318/561
5,417,696	5/1995	Kashuba et al.	606/9.1
5,428,748	6/1995	Davidson et al.	395/275
5,429,140	7/1995	Burdea et al.	128/774
5,436,542	7/1995	Petelin et al.	318/567
5,436,640	7/1995	Reeves	345/161
5,445,166	8/1995	Taylor	128/897
5,451,294	9/1995	Massimino et al.	340/407.1
5,459,382	10/1995	Jacobus et al.	318/568.11
5,467,763	11/1995	McMahon et al.	600/201
5,512,919	4/1996	Araki	345/156
5,513,100	4/1996	Parker et al.	364/167
5,576,727	11/1996	Rosenberg et al.	345/179
5,587,937	12/1996	Massie et al.	364/578
5,589,828	12/1996	Armstrong	341/20
5,589,854	12/1996	Tsai	345/161
5,591,924	1/1997	Hilton	73/862.043
5,623,582	4/1997	Rosenberg	395/99
5,629,594	5/1997	Jacobus et al.	318/568
5,642,469	6/1997	Hannaford et al.	395/99

OTHER PUBLICATIONS

Winey III, Calvin Mccoy, "Computer Simulated Visual and Tactile Feedback as an Aid to Manipulator and Vehicle Control," MIT,, Jun. 1981, pp. 1–79.

Schmult, Brian et al., "Application Areas for a Force–Feedback Joystick," ASME 1993, DSC–vol. 49, pp. 47–54.

McAffee, Douglas A., "Teleoperator System/Telerobot Demonstrator: Force Reflecting Hand Controller Equipment Manual," JPL Jan. 1988, pp. 3–8, 11, and A–34.

Russo, Massimo Andrea, "The Design and Implementation of a Three Degree–of–Freedom Force Output Joystick," Department of Mechanical Engineering, May 11, 1990, pp. 9–40 & 96 &97.

Snow, E. et al., "Compact Force–Reflecting Hand Controller," JPL, Apr. 1991, vol. 15, No. 3, Item No. 153, pp. 1–15a.

Howe, Robert D., "Task Performance with a Dextrous Teleoperated Hand System," Proceedings of SPIE, Nov. 1992, vol. 1833, pp. 1–9*.
Jones, L.A., et al., "A Perceptual Analysis of Stiffness," Experimental Brain Research 1990, pp. 151–156.
Iwata, Hiroo, "Pen–based Haptic Virtual Environment," Institute of Engineering Mechanics, University of Tsukuba, Japan, pp. 287–292.
Tan, Hong Z et al., "Manual Resolution of Compliance When Work and Force Cues are Minimized," ASME 1993, DSC–vol. 49, pp. 99–104.
Kotoku, Tetsuo, "A Predictive Display with Force Feedback and its Application to Remote Manipulation System with Transmission Time Display," IEEE 1992, Jul. 7–10, 1992, pp. 239–246.
Slocum, Alexander H., Precision Machine Design, Prentice Hall, 1992, pp. 661–664.
"12–V Voice Coil Motor Driver," Si9961 Jun. 6, 1994, pp. 4–10–4–16.
Jacobsen, S.C. et al., "High Performance, High Dexterity, Force Reflective Teleoperator II," ANS Topical Meeting on Robotics & Remote Systems, Albuquerque, New Mexico Feb. 24–27, 1991, pp. 1–10.
Kotoku, Tetsuo et al., "Enviroment Modeling for the Interactive Display (EMID) Used in Telerobotic Systems," IEEE Nov. 3–5, 1991, pp. 99–1004.
Bejczy, Antal K., "The Phantom Robot: Predictive Displays for Teleoperation with Time Delay," IEEE 1990, pp. 546–550.
Buttolo, Pietro et al., "Pen–Based Force Display for Precision Manipulation in Virtual Environments," IEEE Mar. 1995, pp. 1–8.
Tan, Hong Z., et al., "Human Factors for the Design of Force–Reflecting Haptic Interfaces," Tan, Srinivasan, Eberman, & Chang, ASME WAM 1994, pp. 1–11.
Ellis, R.E. et al., "Design and Evaluation of a High–Performance Prototype Planar Haptic Interface," ASME Dec. 3, 1993, DSC–vol. 49, pp. 55–64.
Adelstein Bernard D. et al., "A High Performance Two Degree–of–Freedom Kinesthetic Interface," Massachusetts Institute of Technology 1992, pp. 108–112.
Colgate J. Edward et al., Implementation of Stiff Virtual Walls in Force–Reflecting Interfaces, Sep. 22, 1993.
Iwata, Hiroo et al, Volume Haptization, IEEE 1993, pp. 16–18.
Fischer, Patrick et al., "Specification and Design of Input Devices for Teleoperation," 1990.
Burdea, Grigore et al., "Distributed Virtual Force Feeback," IEEE, May 2, 1993, pp. 25–44.
Rosenberg, Louis B., "The Use of Virtual Fixtures as Perceptual Overlays to Enhance Operator Performance in Remote Environments," Air Force Material Command, Sep. 1992, pp. 1–42.
Rosenberg, Louis B., The Use of Virtual Fixtures to Enhances Operator Performance in Time Delayed Teleoperation, Mar. 1993, pp. 1–45.
Rosenberg, Louis B., "Perceptual Design of a Virtual Rigid Surface Contact," Center for Design Research Stanford University, Air Force Material Command, Apr. 1993, pp. 1–41.
Rosenberg, Louis B. et al., "Perceptual Decomposition of Virtual Haptic Surfaces," IEEE, Oct. 1993.
Rosenberg, Louis B., "Virtual Fixtures as Tools to Enhance Operator Performance in Telepresence Environments" SPIE Telemanipulator Technology, Mar. 1993.
Rosenberg, Louis B., "Virtual Haptic Overlays Enhance Performance in Telepresence Tasks," SPIE 1994.
Burdea, Girgore et al., "Dextrous Telerobotics with Force Feedback–An Overview," Robotica 1991, vol. 9.
Colgate, J. Edward et al., "Implementation of Stiff Virtual Walls in Force–Reflecting Interfaces," 1993, pp. 1–9.
Yamakita, M. et al., Tele–Virtual Reality of Dynamic Mechanical Model, IEEE Jul. 7–10, 1992, pp. 1103–1110.
Adlestein, Bernard D. et al., "Design and Implementation of a Force Reflecting Manipulandum for Manual Control Research," 1992, pp. 1–24.
Ouh–young, Ming et al., "Force Display Performs Better than Visual Display in a Simple 6–D Docking Task," IEEE 1989, pp. 1462–1466.
Kim, Won S. et al., "Graphics Displays for Operator Aid in Telemanipulation," IEEE 1991, pp. 1059–1067.
Hannaford, Blake et al., "Performance Evaluation of a Six–Axis Generalized Force–Reflecting Teleoperator," IEEE May/Jun. 1991, vol. 21, No. 3, pp. 620–633.
Kim, Won S. et al., A Teleoperation Training Simulator with Visual and Kinesthetic Force Virtual Reality.
Burdea, Grigore et al., "A Portable Dextrous Master with Force Feedback," Presence: Teleoperators and Virtual Enviroments, MIT Press, Jun. 1991.
Fisher, S.S. et al., "Virtual Environment Display System," ACM Interactive 3D Graphics, Oct. 1986.
"The Personal Digitizer™," Immersion Human Interface Corporation 1994.
"High Performance Model of the Immersion Probe," Immersion Probe–MD™, Immersion Human Interface Corporation.
3D Human Interface Tool, Immersion Probe™, Immersion Human Interface Corporation 1994.
Meyer, Kenneth et al., "A Survey of Position Trackers," The Massachusetts Institute of Technology 1992, Presence, vol. 1, No. 2.
"Useful Technology for Your Idea File," Design News, Mar. 7, 1994, pp. 63.
Smith, Geoffrey, "Call It Palpable Progress," Business Week, Oct. 9, 1995, pp. 93, 96.
Minsky, Margaret et al., "Feeling and Seeing: Issues in Force Display," ACM 1990, pp. 235–242.
Herndon, J.N. et al., "The State–of–the–Art Model M–2 Maintenance System," Proceedings of the 1984 National Topical Meeting on Robotics and Remote Handling in Hostile Environments, American Nuclear Society, pp. 59–65.
Batter, James J. et al., "Grope–1: A Computer Display to the Sense of Feel," pp. TA–4–188–TA–4–192.
Gotow, J.K., et al., "Perception of Mechanical Properties at the Man–Machine Interface," IEEE 1987, pp. 688–689.
"Proceedings of the IFIP Congress 65," International Federation for Information Processing, Information Processing 1965, vol. 3, New York, May 24–29, 1965, pp. 506
Atkinston, William D. et al, "Computing with Feeling," Comput. & Graphics, vol. 2, No. 2–E, pp. 97–103.
Noll, A. Michael, "Man–Machine Tactile Communication Dissertation,"Polytechnic Institute of Brooklyn, Jun. 1971, pp. 1–8.
Ouh–Young, Ming, "Force Display in Molecular Docking," Chapel Hill 1990, pp. 1–85.
Ouh–Young, Ming et al., "Using a Manipulator for Force Display in Molecular Docking," IEEE 1988, pp. 1824–1829.

Wiker, Steven F. et al., "Development of Tactile Mice for Blind Access to Computers: Importance of Stimulation Locus, Object Size, and Vibrotactile Display Resolution," Proceedings of the Human Factors Society 35th Annual Meeting 1991, pp. 708–712.
Krueger, Myron W., Artificial Reality 1988, pp. 54–75.
Tavkhelidze, D.S. "Kinematic Anaylsis of Five–Link Spherical Mechanisms," Mechanism and Machine Theory 1974, vol. 9, pp. 181–190.
"Foot–Operated Mouse," IBM Technical Disclosure Bulletin, Apr. 1986, vol. 28, No. 11.

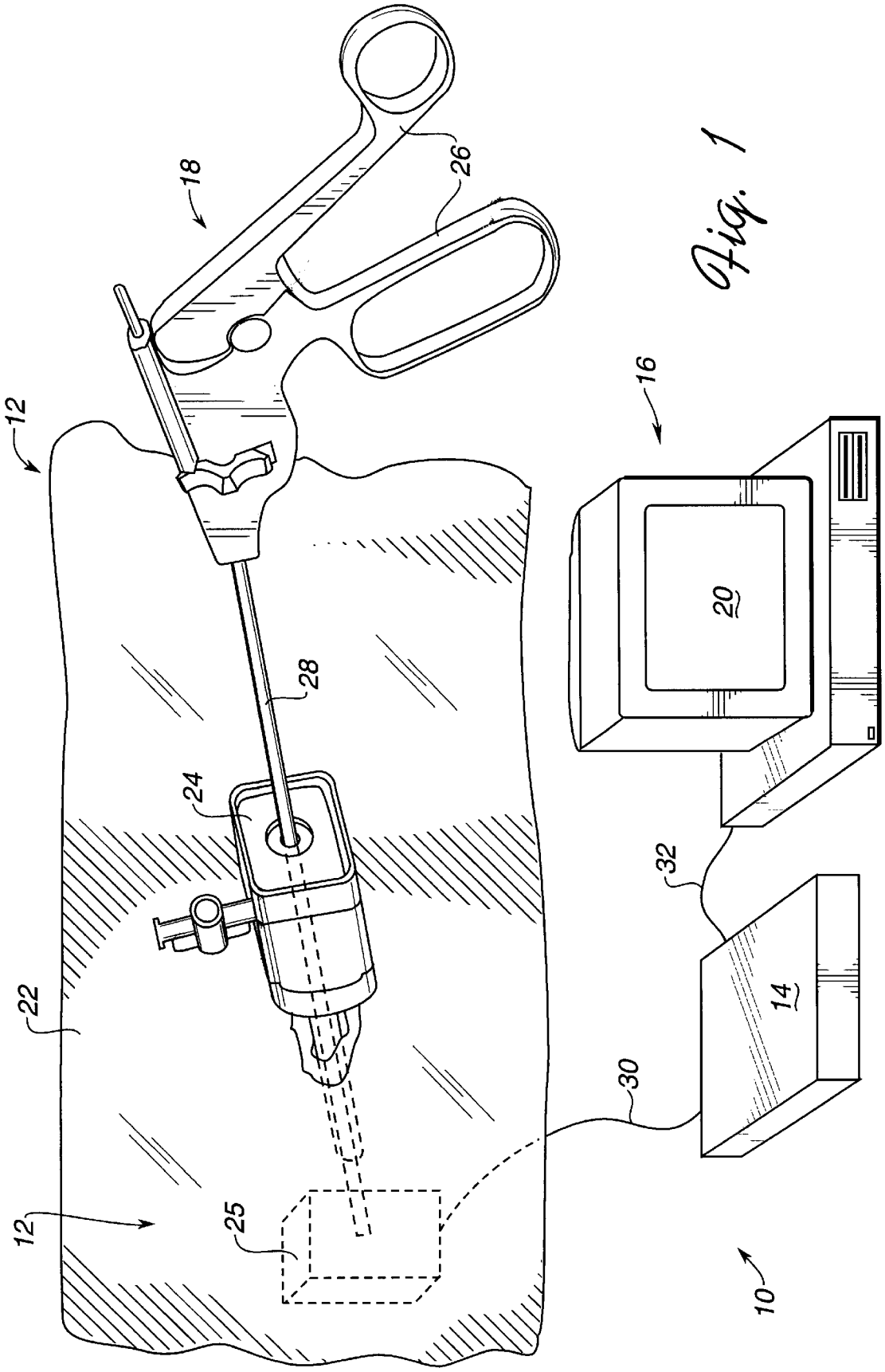

Fig. 1

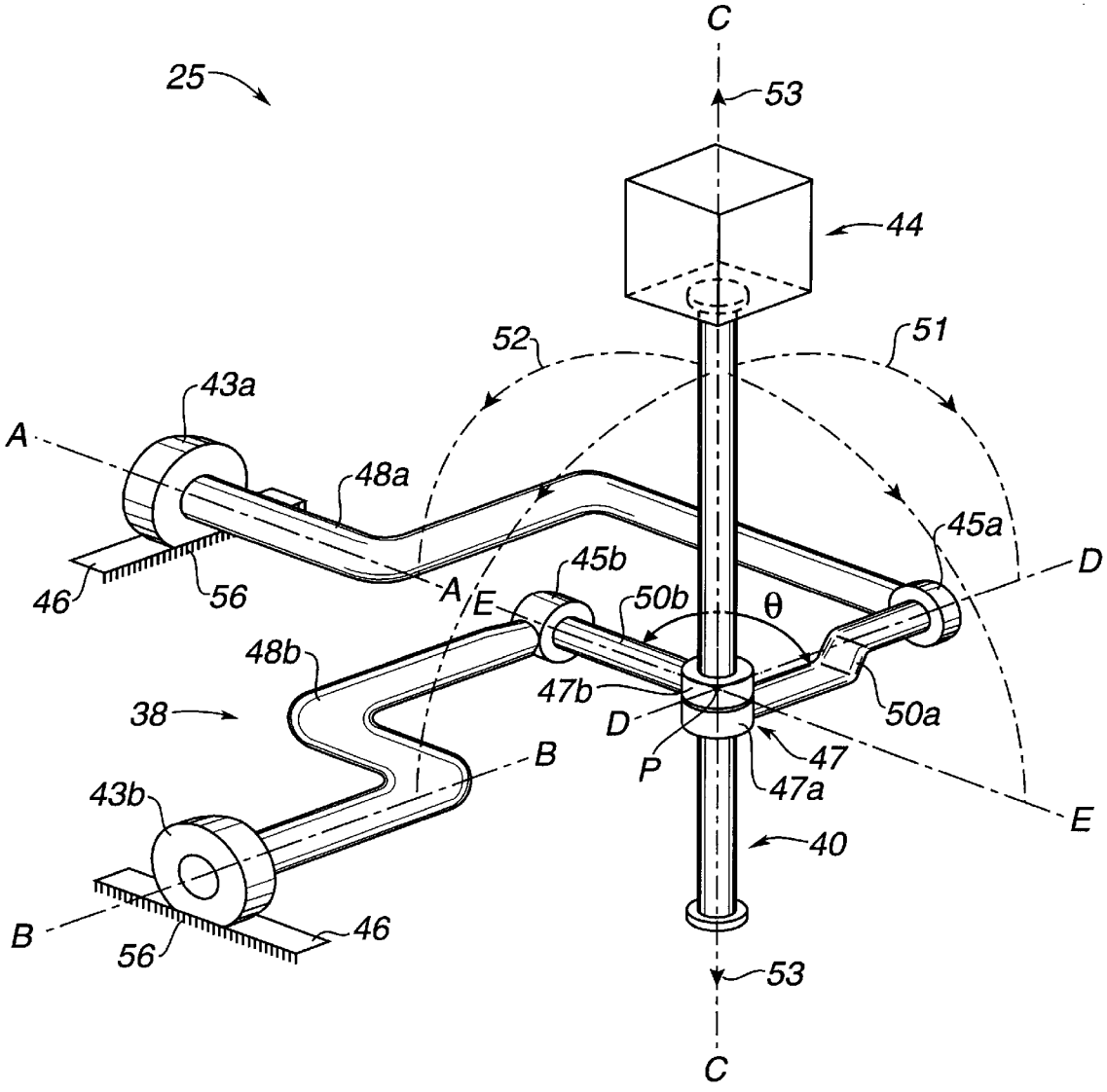
C
25
53
44
52
51
43a
A
48a
45a
D
45b
46
56
A
E
50b
θ
48b
47b
50a
38
D
B
P
47
47a
43b
E
40
B
56
46
53
C

Fig. 2

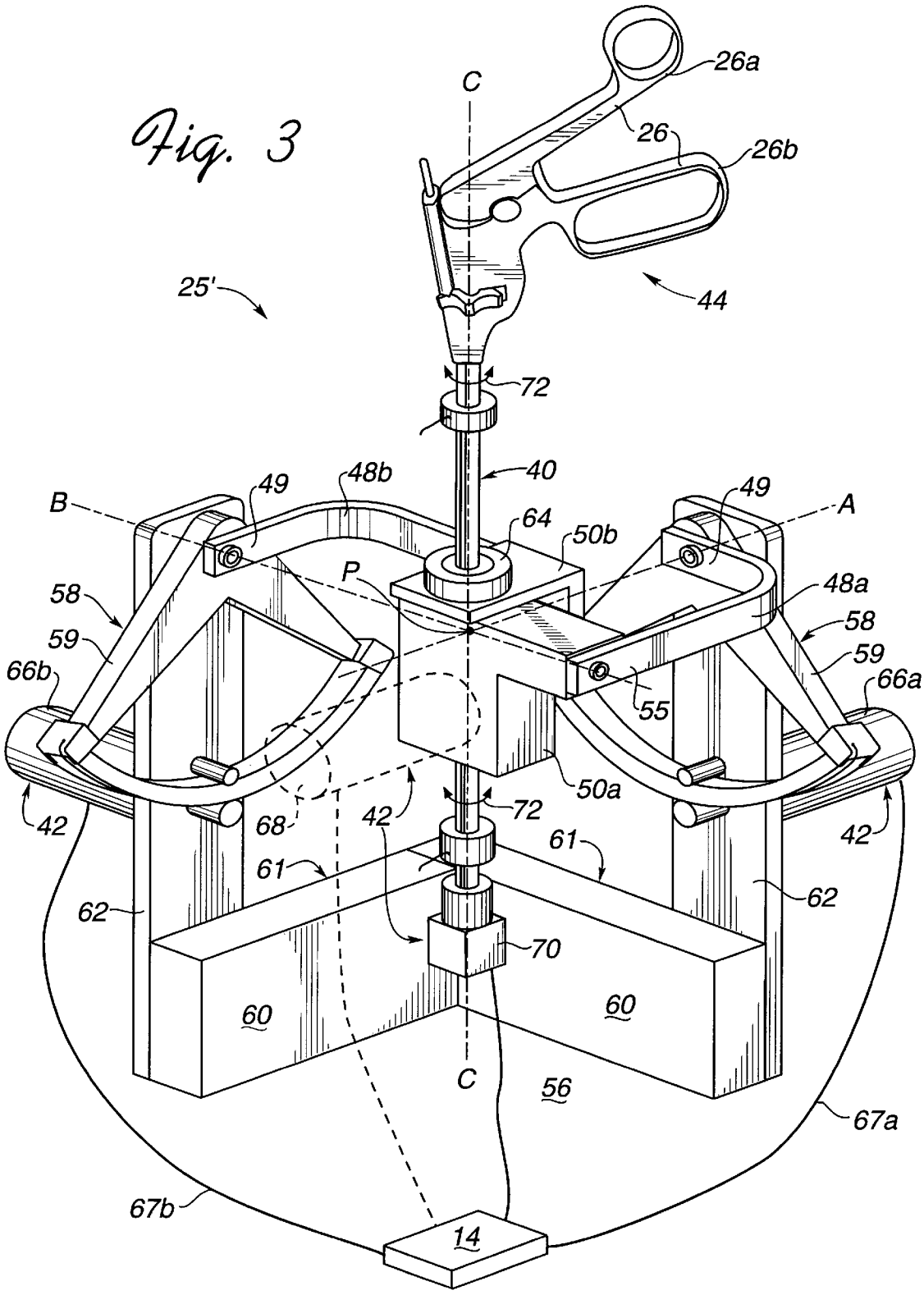
Fig. 3
C
26a
26
26b
25'
44
72
40
49
48b
B
64
50b
49
A
P
48a
58
58
59
59
66b
66a
55
50a
42
68
42
72
42
61
61
62
62
70
60
60
C
56
67a
67b
14

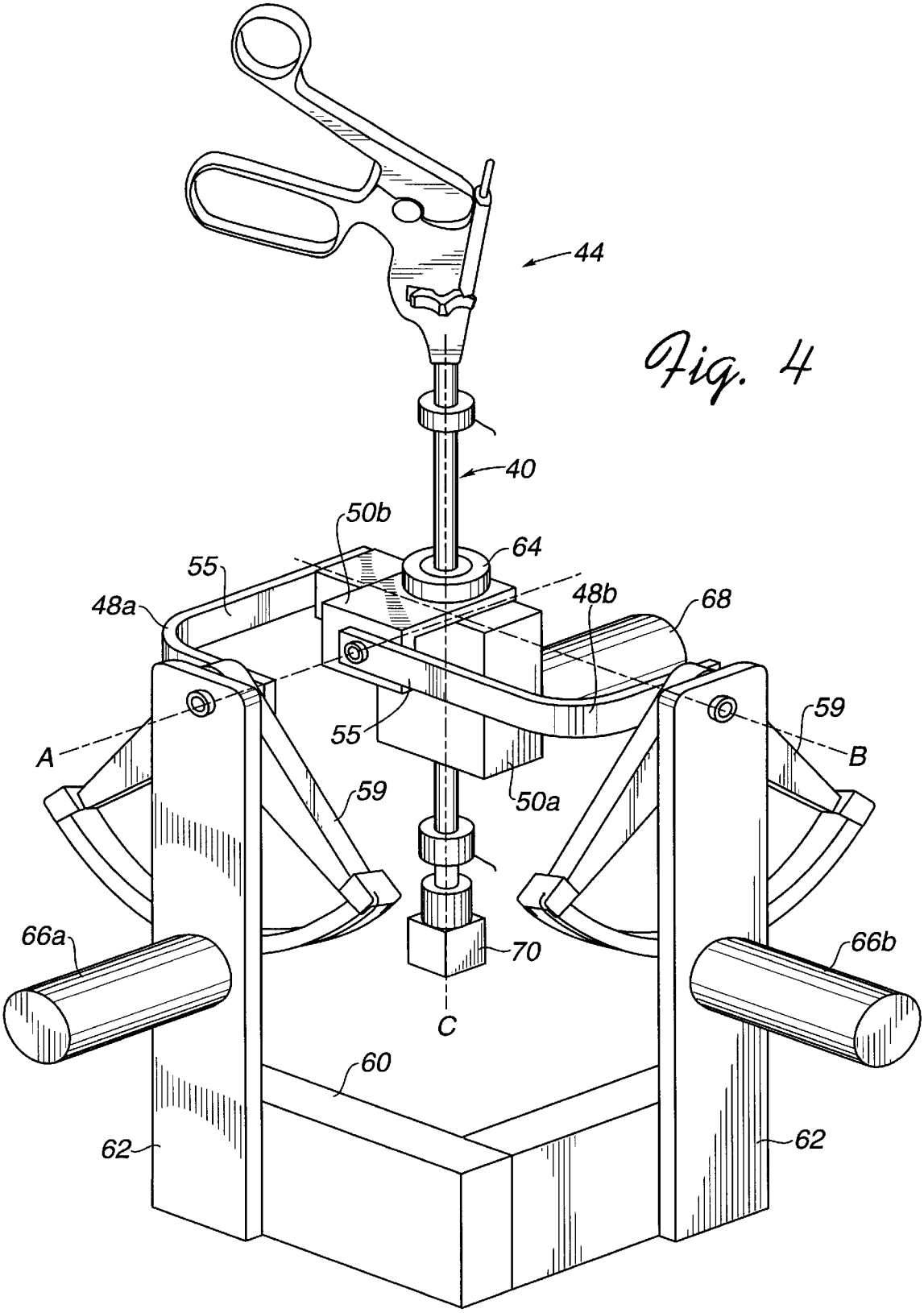

Fig. 4

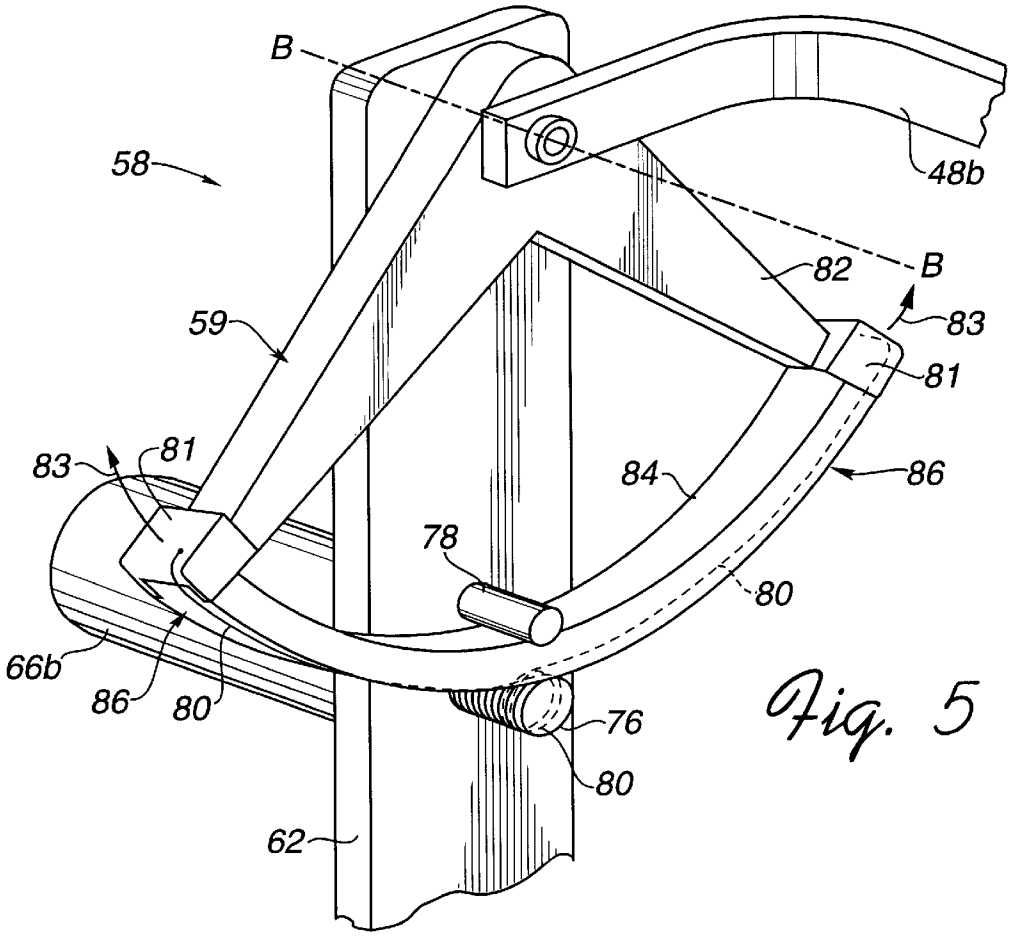

Fig. 5

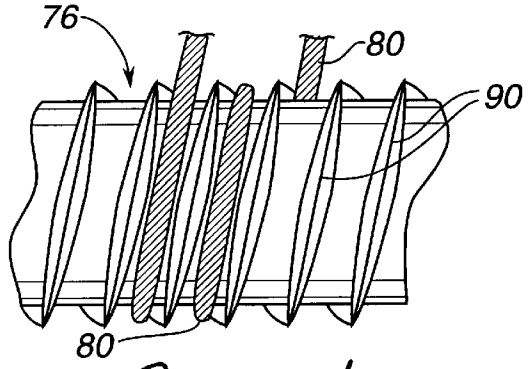

Fig. 5b

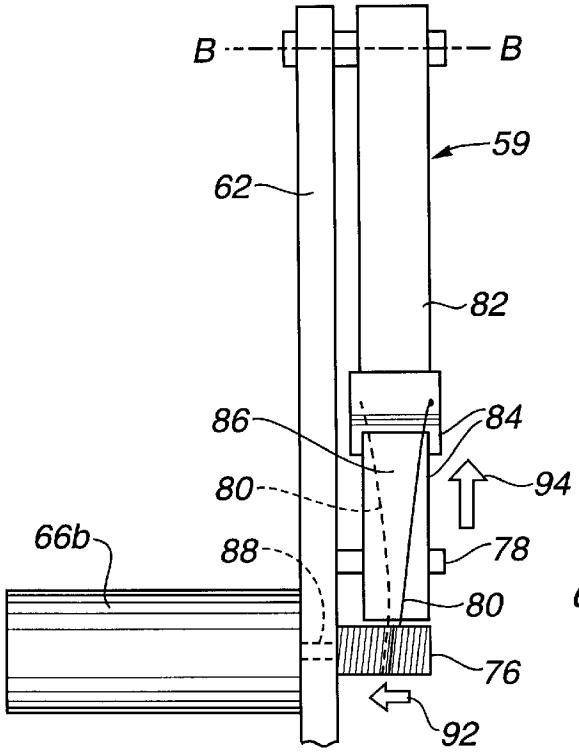

Fig. 5a

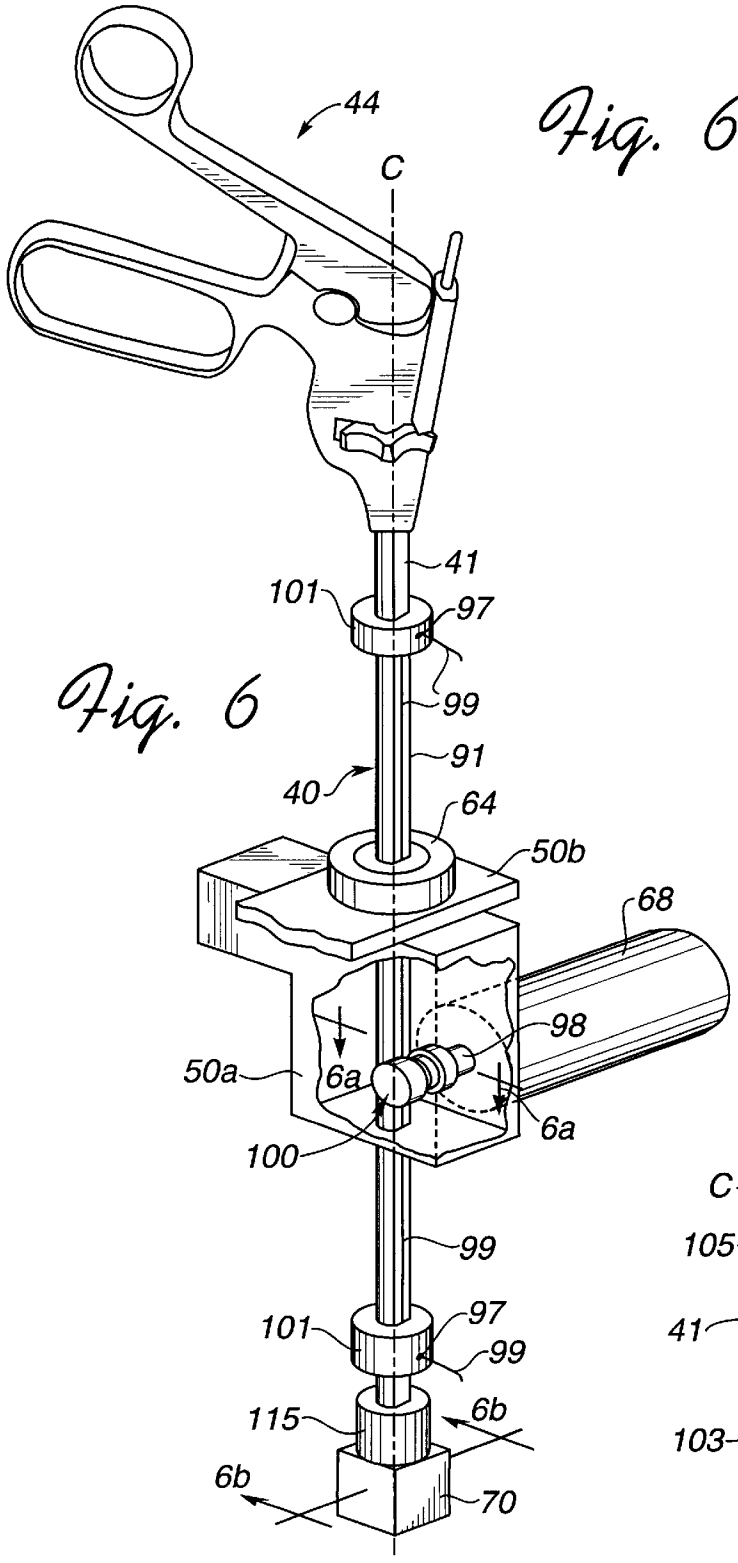

Fig. 6

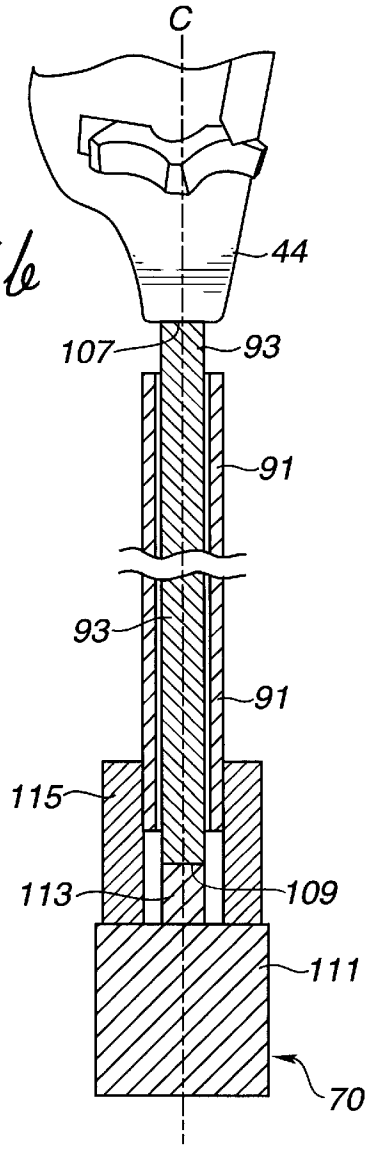

Fig. 6b

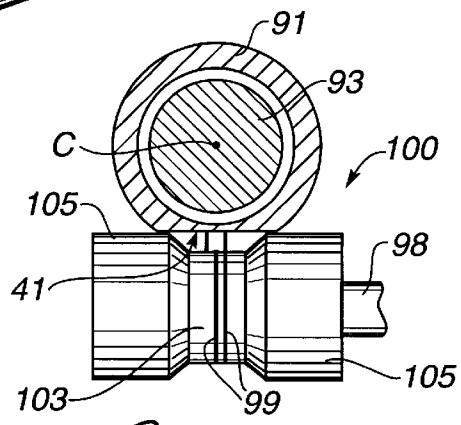

Fig. 6a

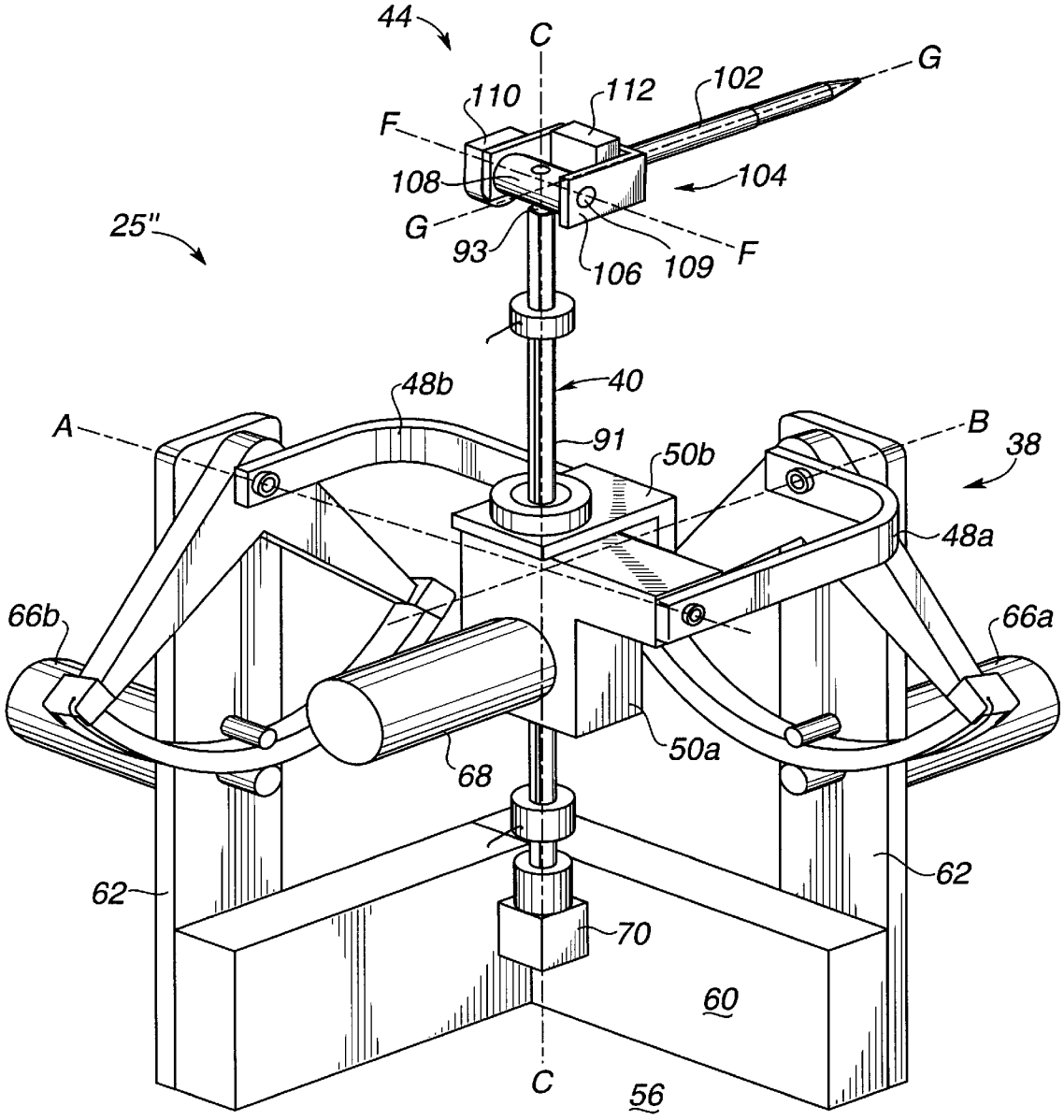
44
C
G
102
112
110
F
108
104
25"
G
93
106
109
F
40
48b
A
91
50b
B
38
48a
66b
66a
68
50a
62
62
70
60
C
56

Fig. 7

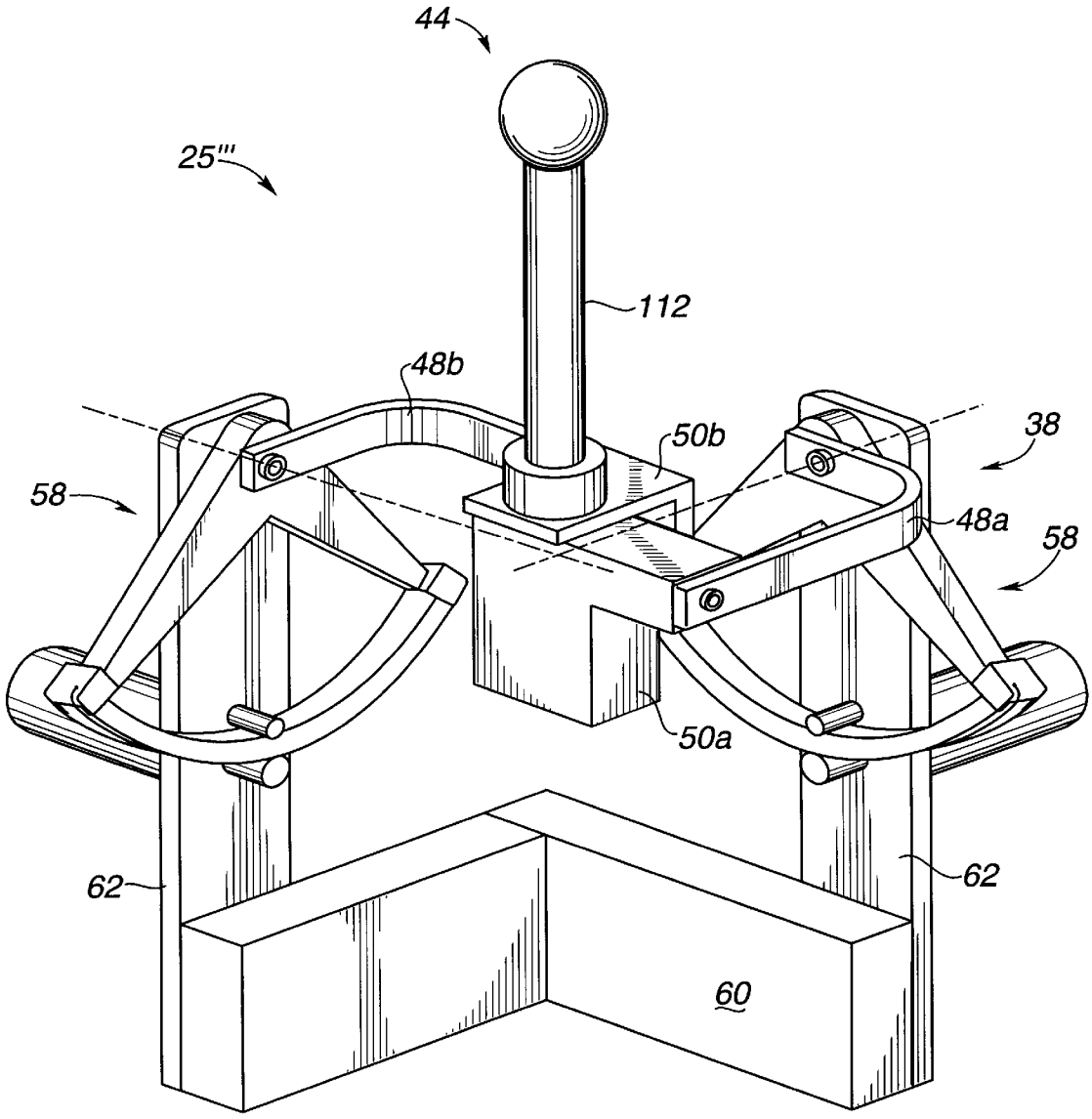

Fig. 8

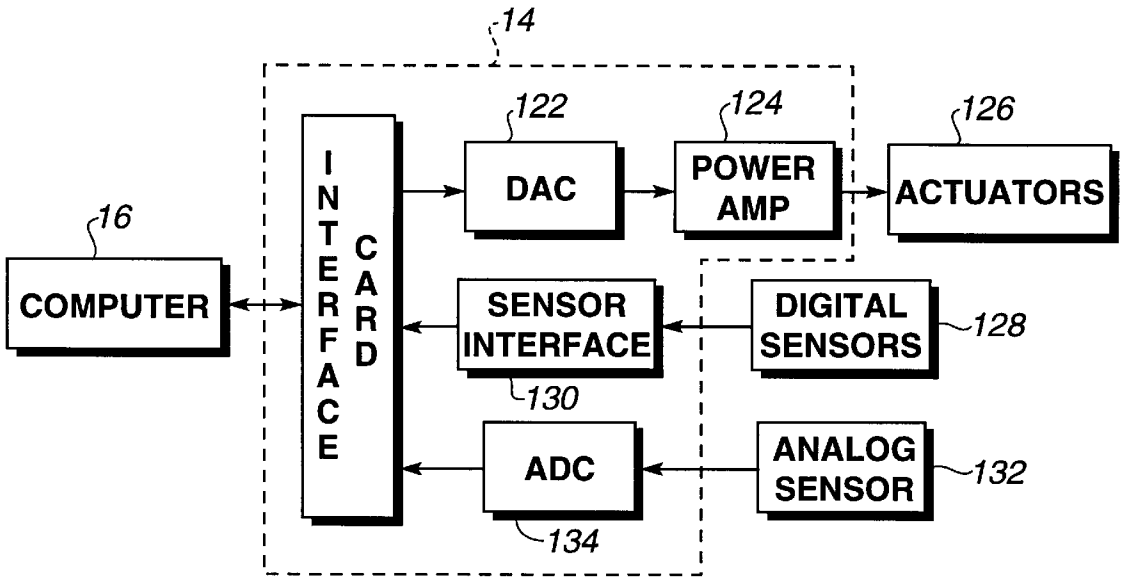
14
122
124
126
INTERFACE CARD
DAC
POWER AMP
ACTUATORS
16
COMPUTER
SENSOR INTERFACE
DIGITAL SENSORS
128
130
ADC
ANALOG SENSOR
132
134

Fig. 9

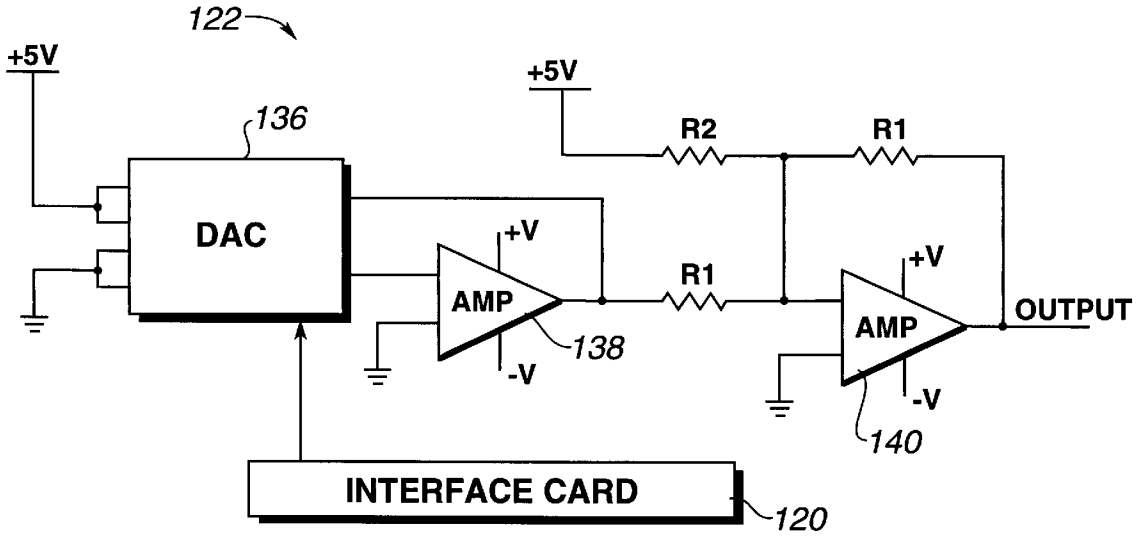
122
+5V
+5V
136
R2
R1
DAC
+V
AMP
R1
+V
AMP
OUTPUT
138
-V
-V
140
INTERFACE CARD
120

Fig. 10

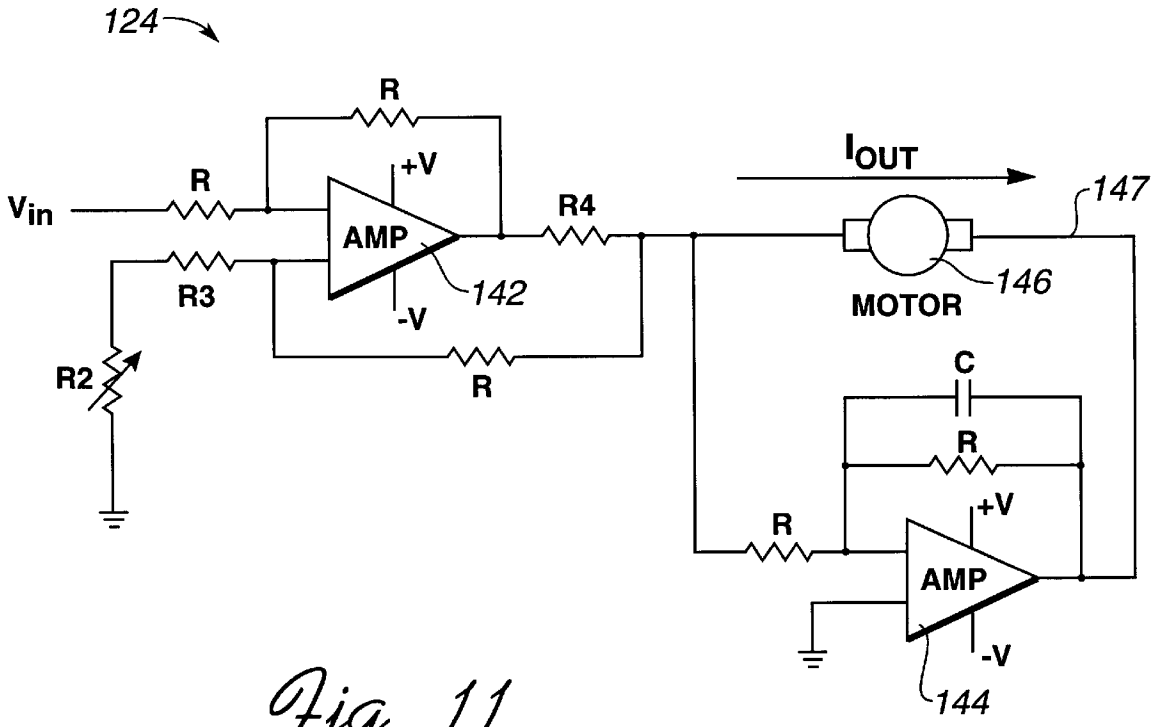

Fig. 11

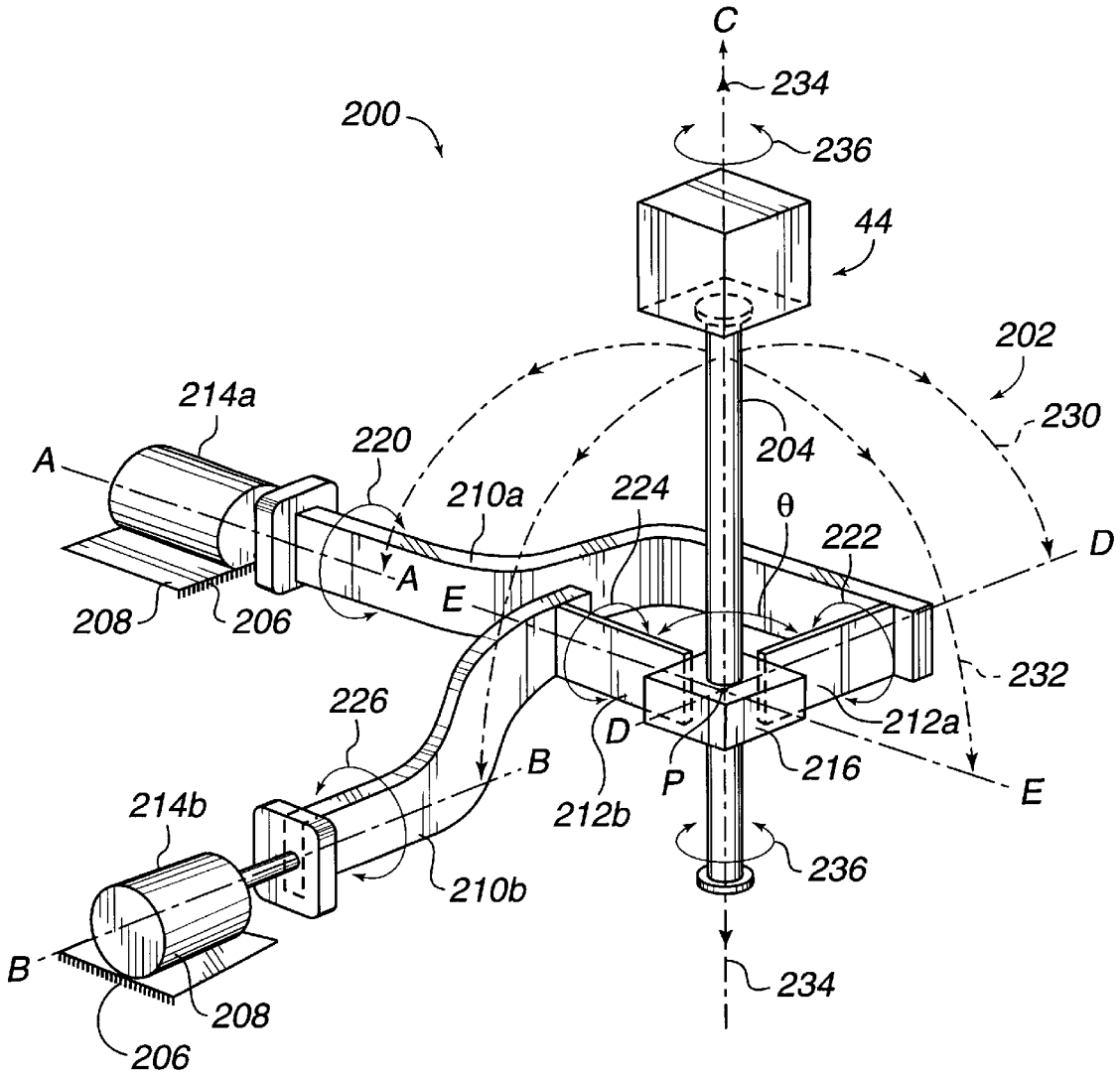
C
234
200
236
44
202
214a
230
220
204
A
210a
224
θ
222
D
A
E
208
206
232
226
212a
D
B
216
P
E
214b
212b
236
210b
B
234
208
206

Fig. 12

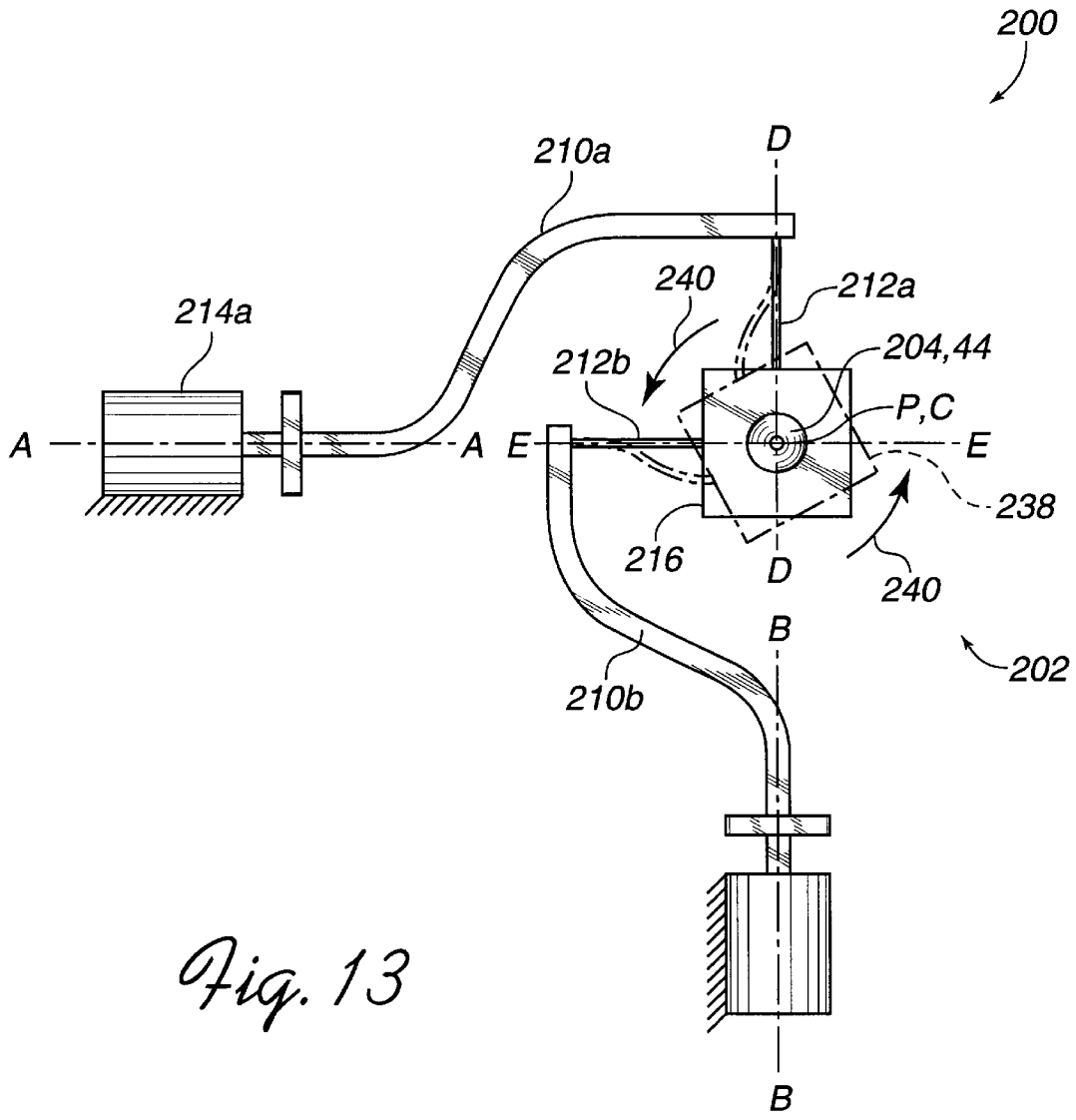
200
210a
D
240
212a
214a
204,44
212b
P,C
A
A
E
E
238
216
D
240
B
202
210b
B

Fig. 13

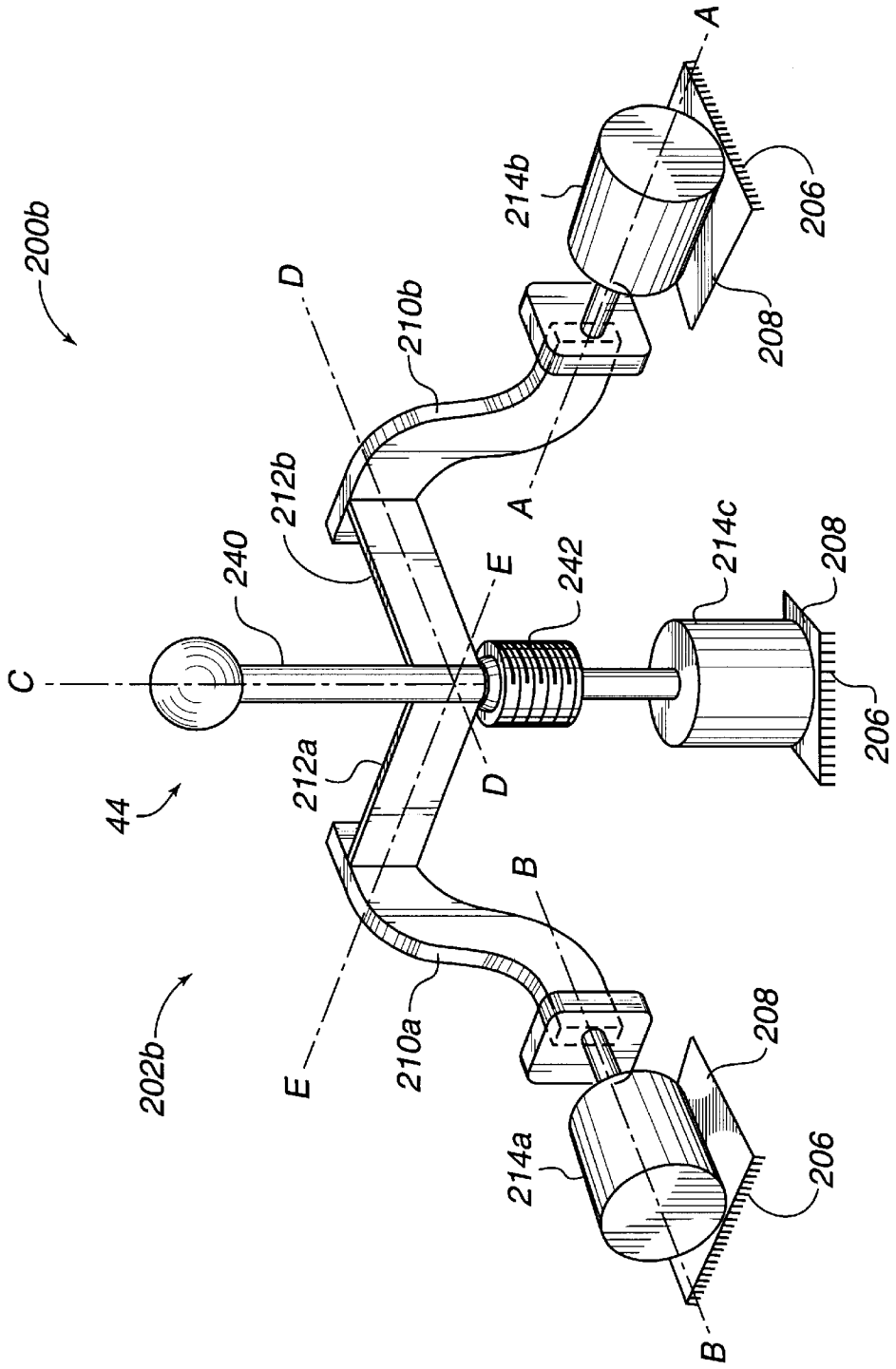
200b
A
214b
206
208
D
210b
212b
A
240
E
242
214c
208
C
206
212a
D
44
B
202b
E
210a
208
214a
206
B

Fig. 14

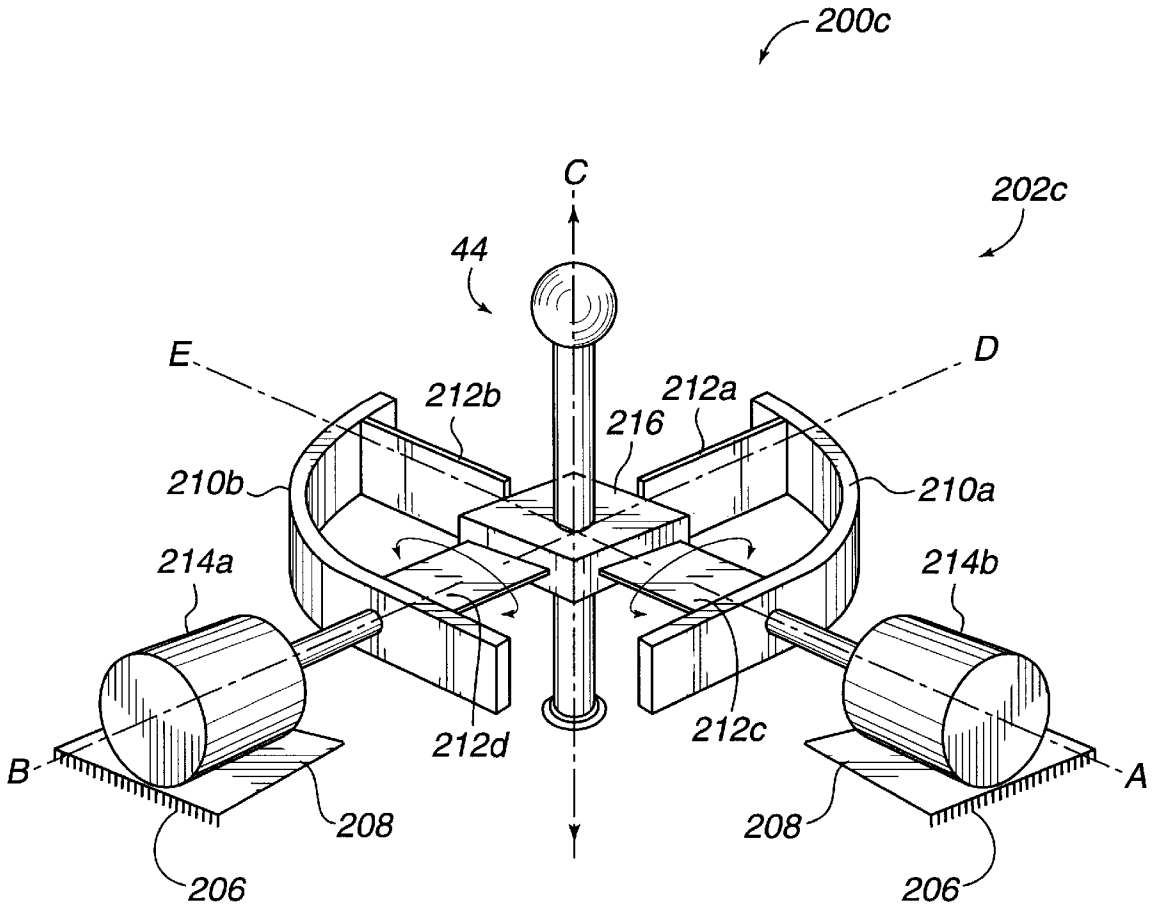
200c
C
202c
44
E
D
212b
212a
216
210b
210a
214a
214b
212d
212c
B
A
208
208
206
206

Fig. 15

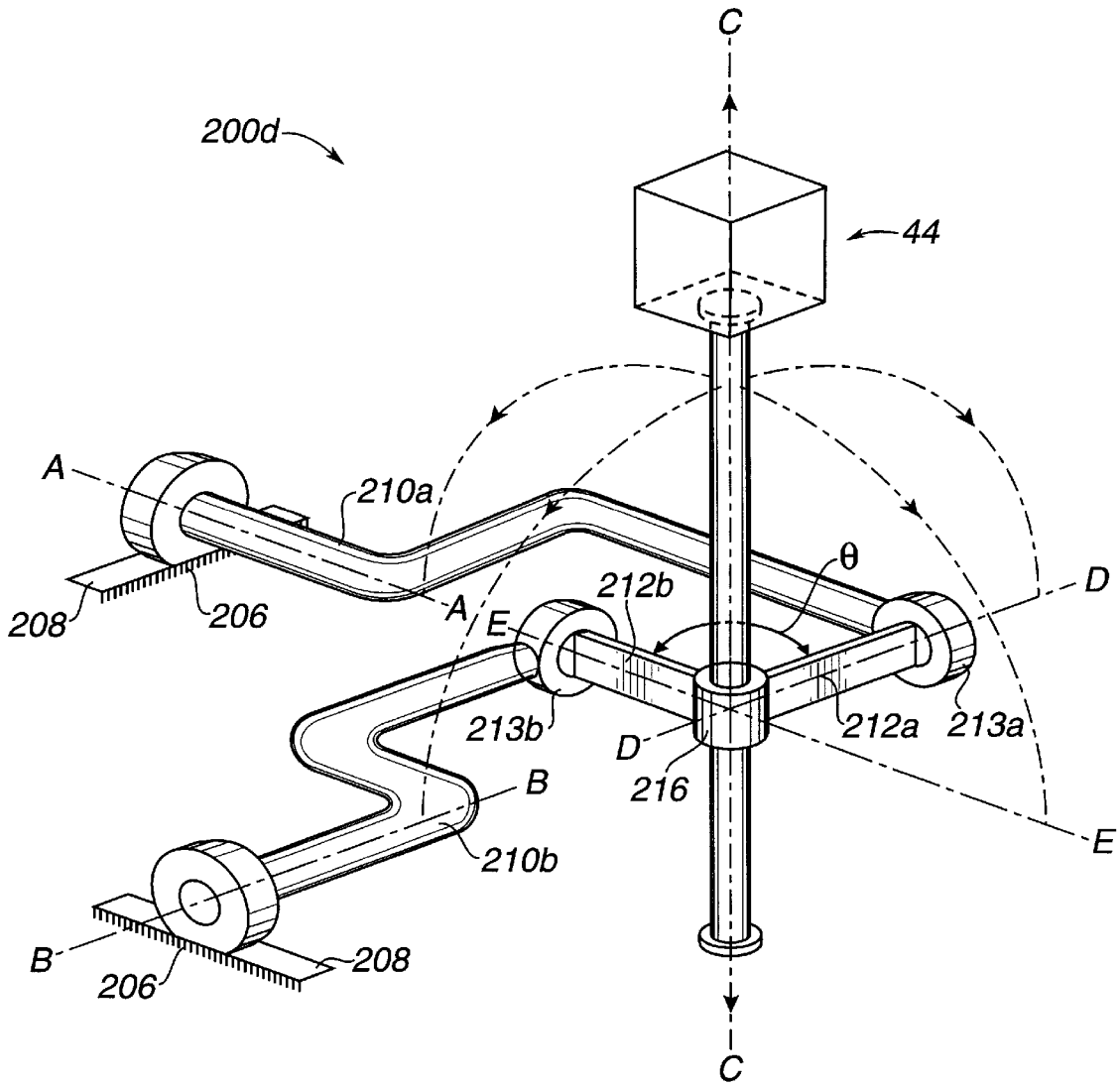
C
200d
44
A
210a
θ
212b
D
208
206
A
E
213b
212a
213a
D
216
B
E
210b
B
206
208
C

Fig. 16

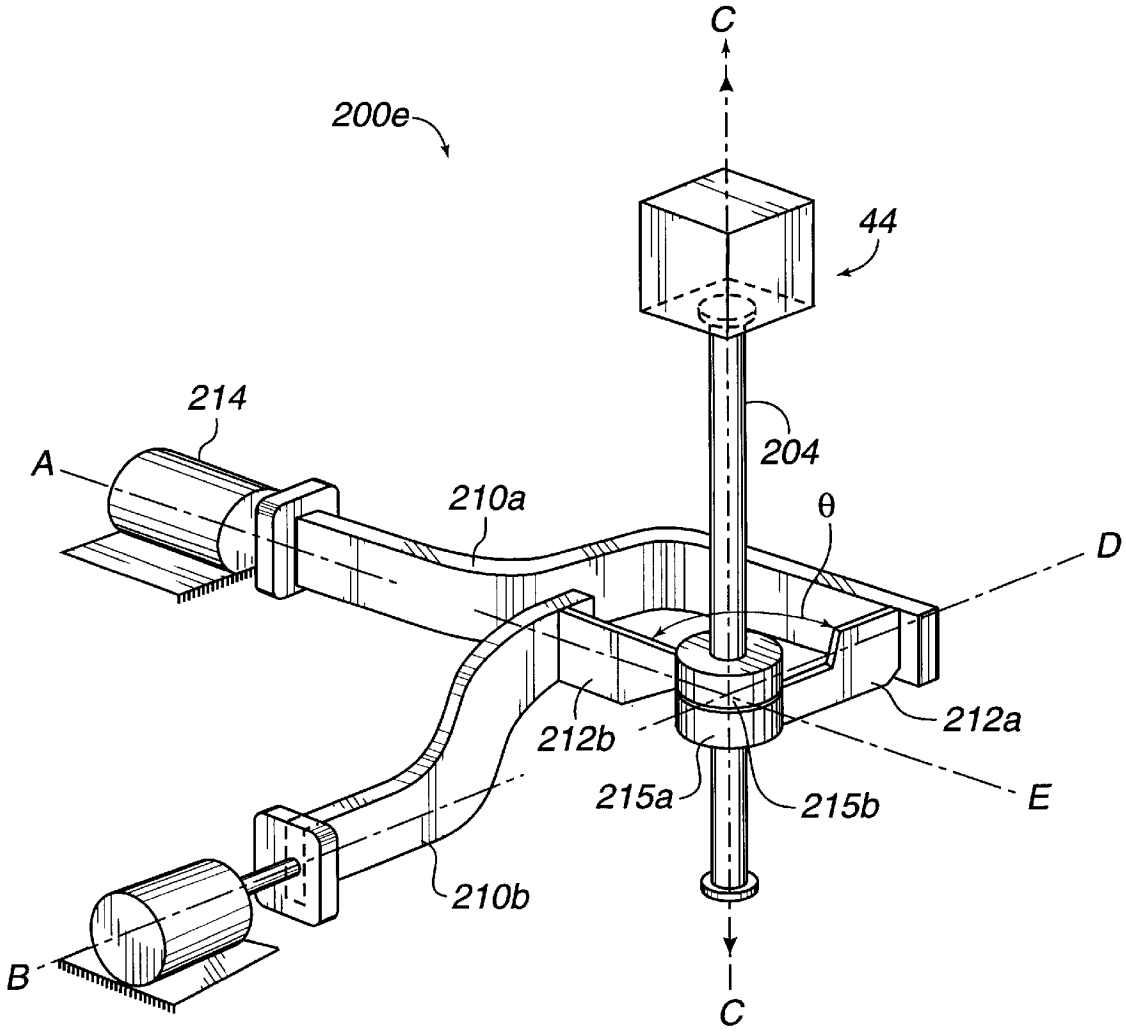

Fig. 17

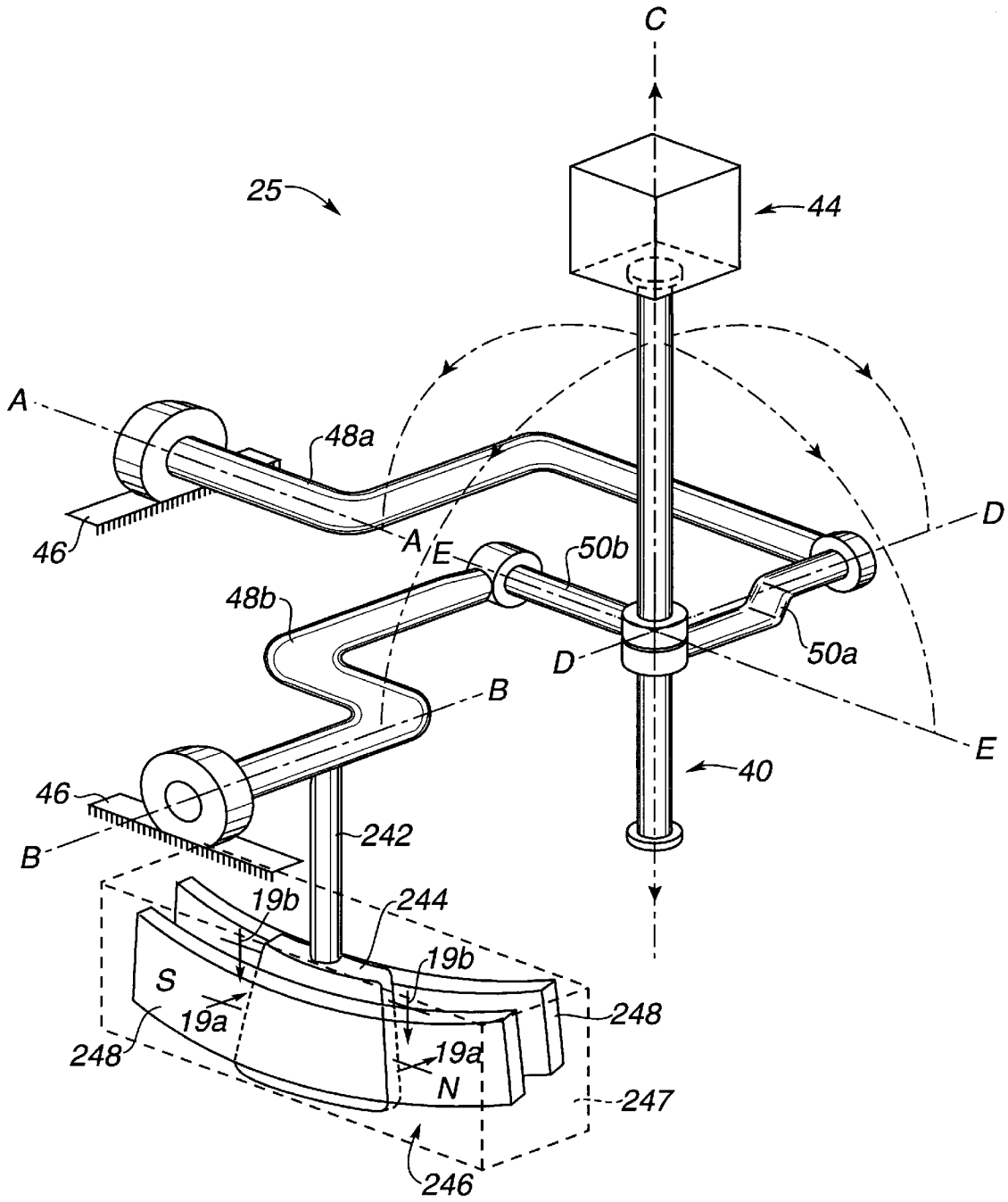
C
25
44
A
48a
46
A
E
50b
D
48b
D
50a
B
E
40
46
242
B
19b
244
19b
S
19a
248
248
19a
N
247
246

Fig. 18

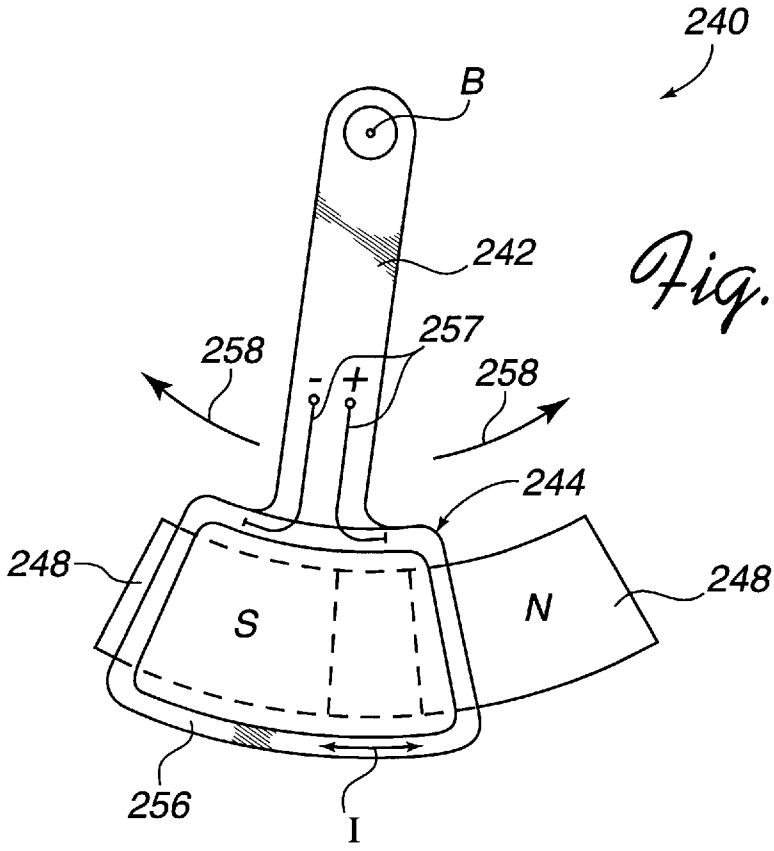

Fig. 19a

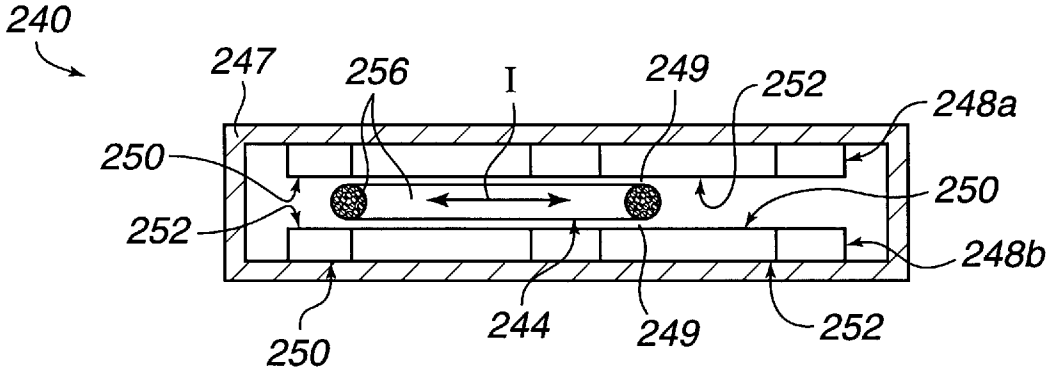

Fig. 19b

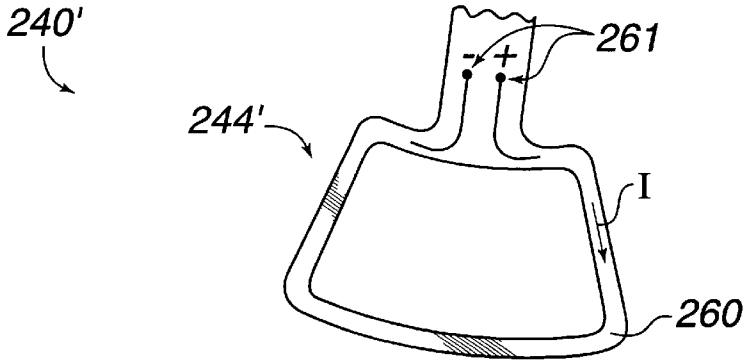

Fig. 20a

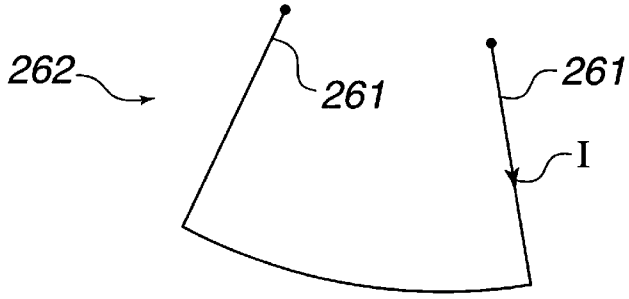

Fig. 20b

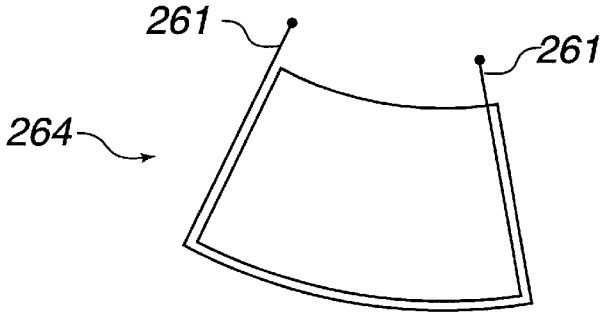

Fig. 20c

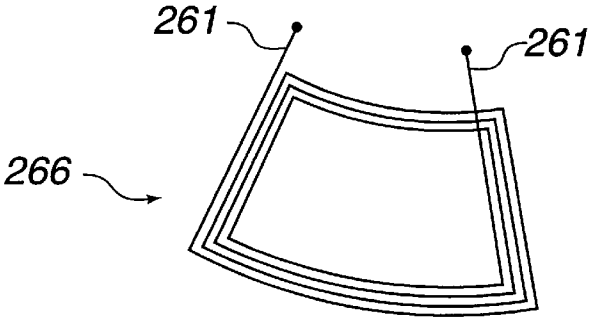

Fig. 20d

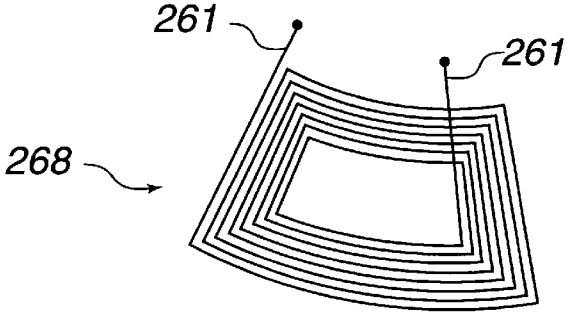

Fig. 20e

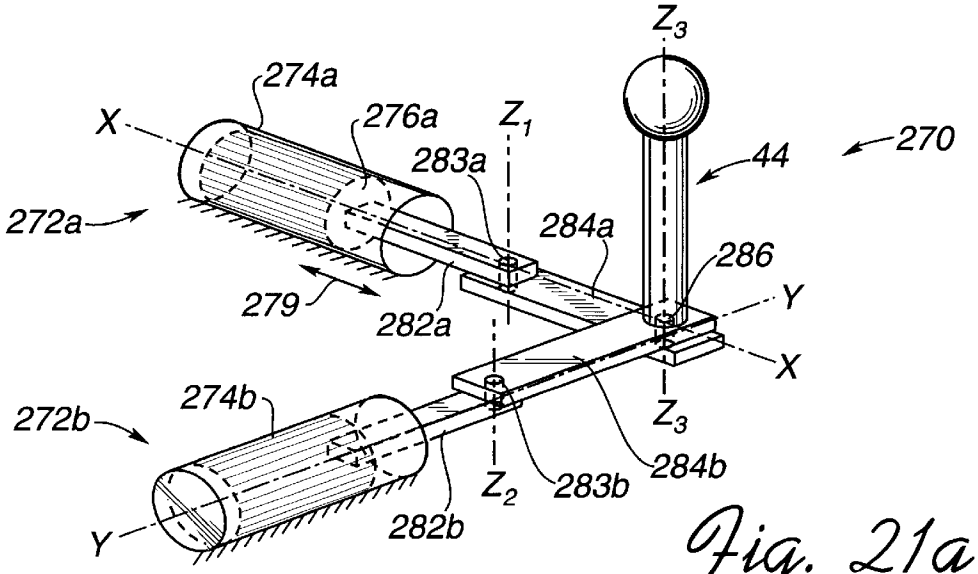

Fig. 21a

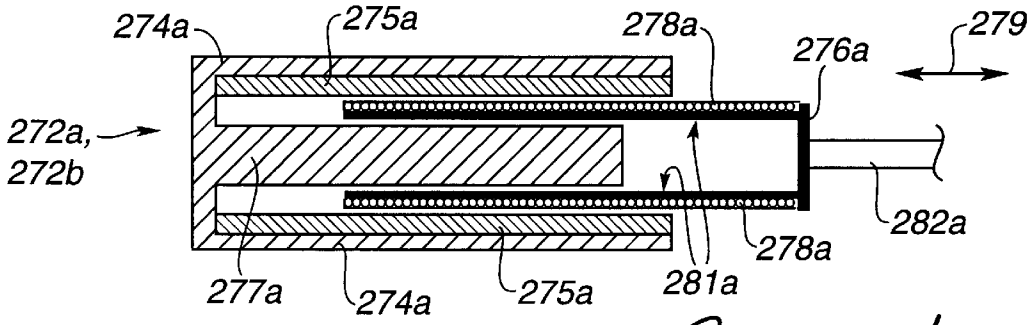

Fig. 21b

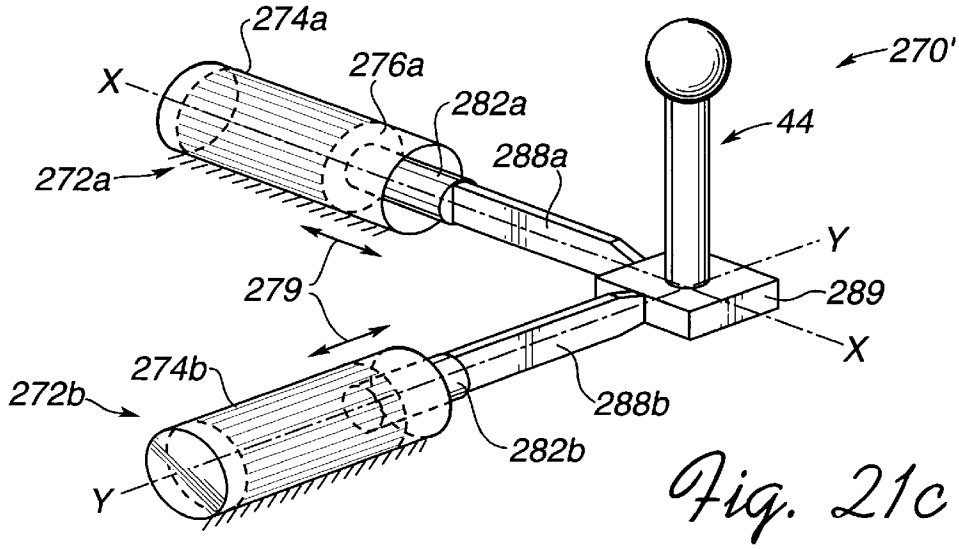

Fig. 21c

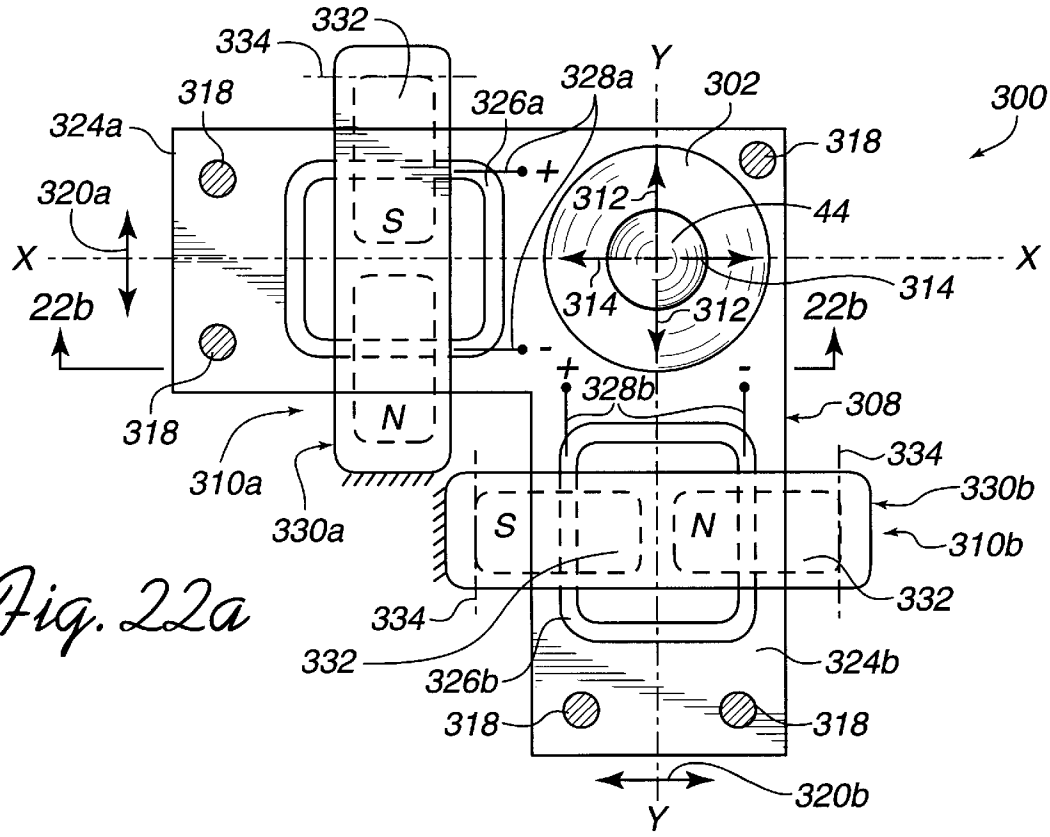

Fig. 22a

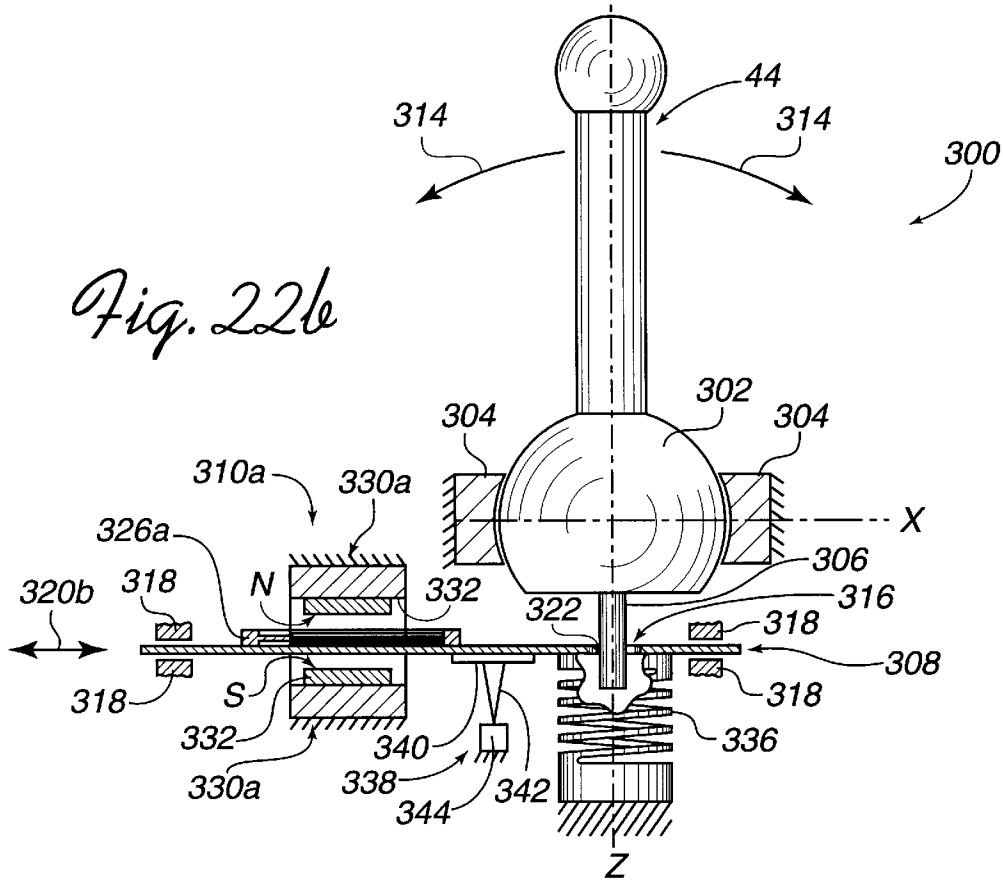

Fig. 22b

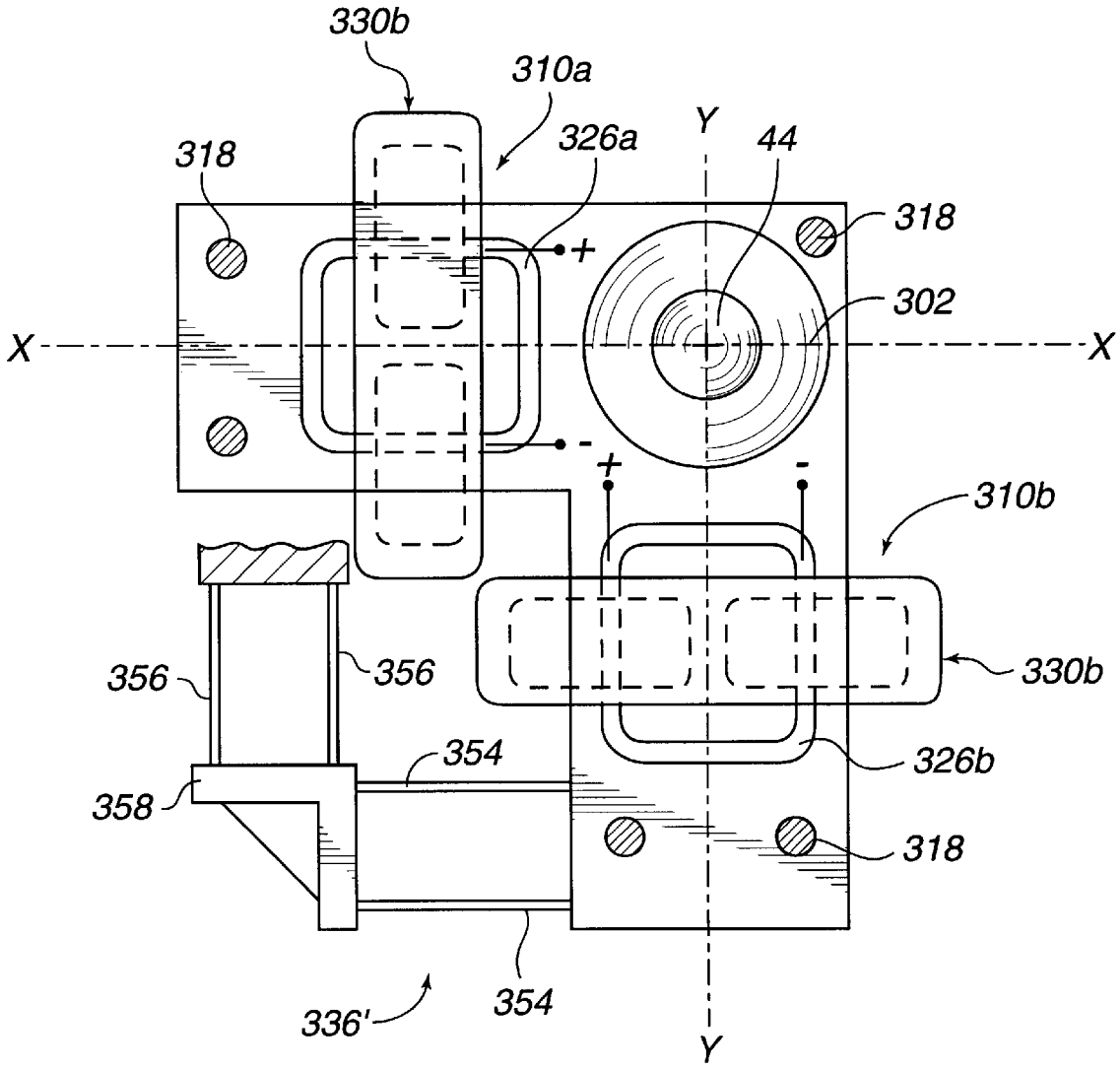
330b
310a
326a
Y
44
318
318
302
X
X
+
-
+
-
310b
356
356
330b
354
326b
358
318
336'
354
Y

Fig. 22c

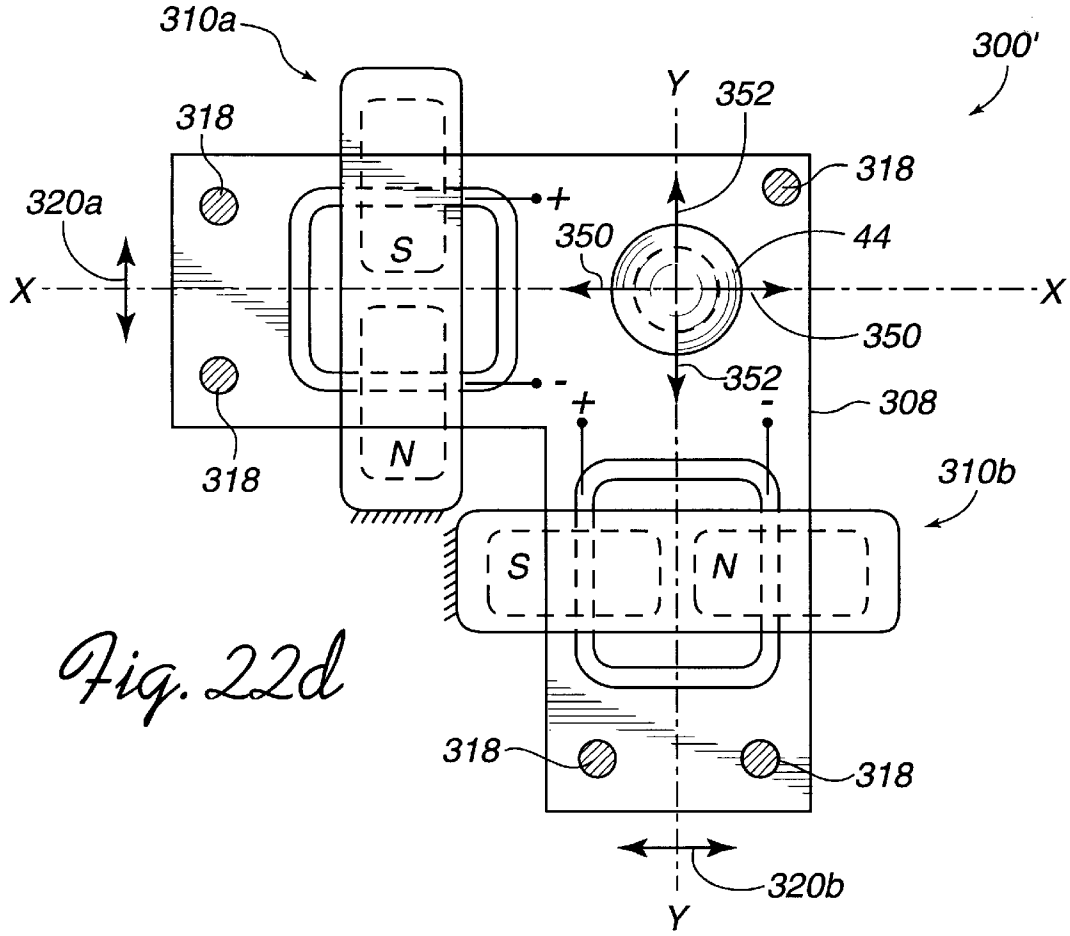

Fig. 22d

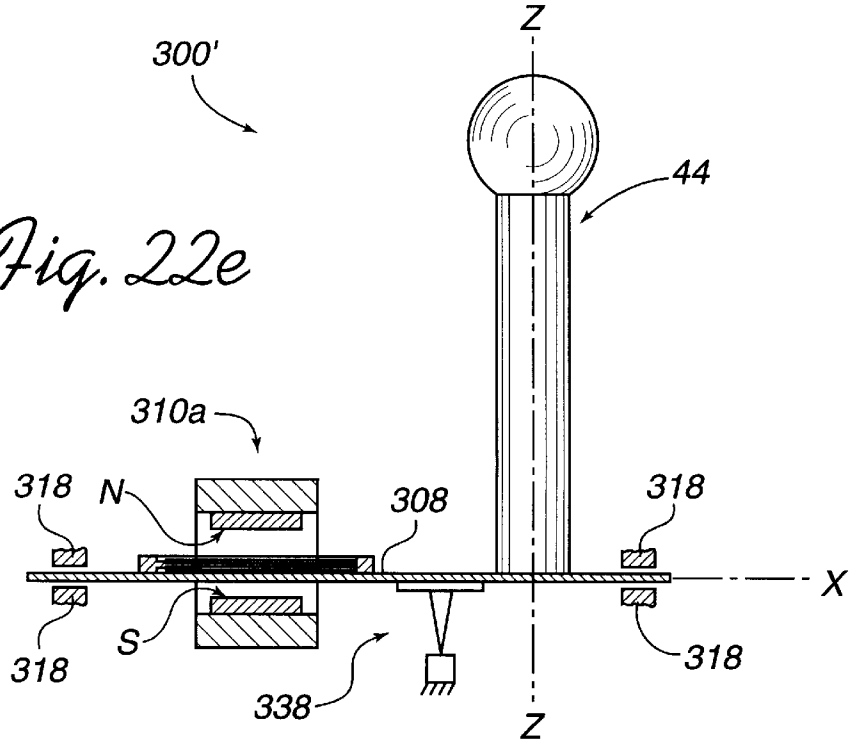

Fig. 22e

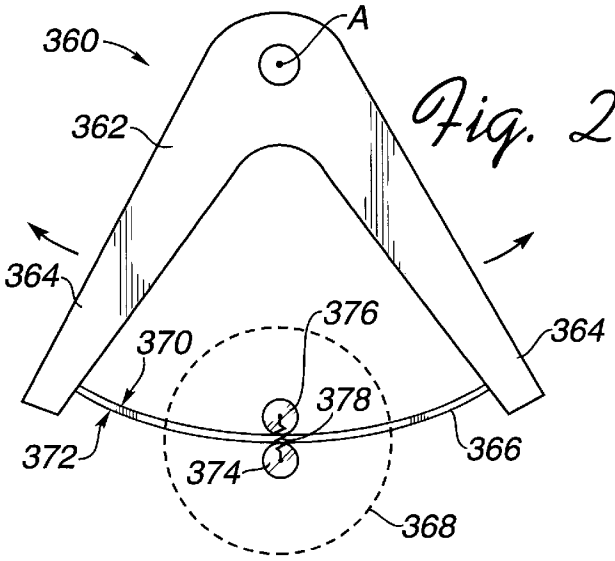

Fig. 23a

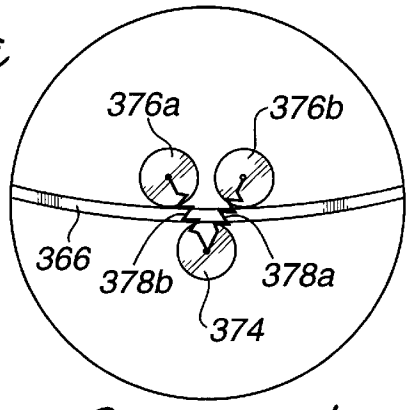

Fig. 23b

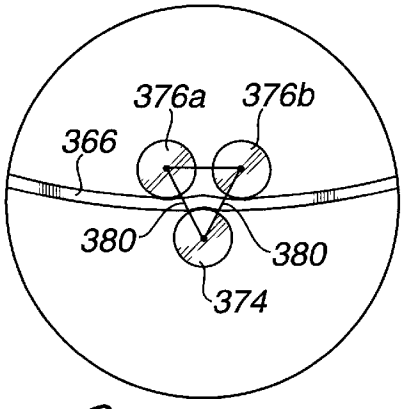

Fig. 23c

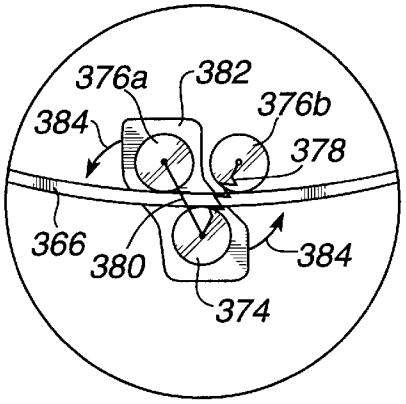

Fig. 23d

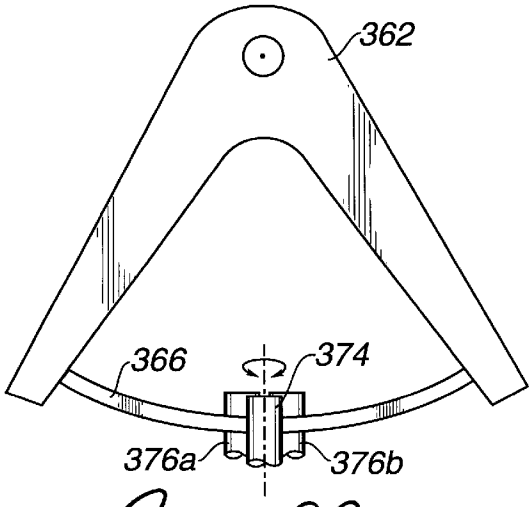

Fig. 23e

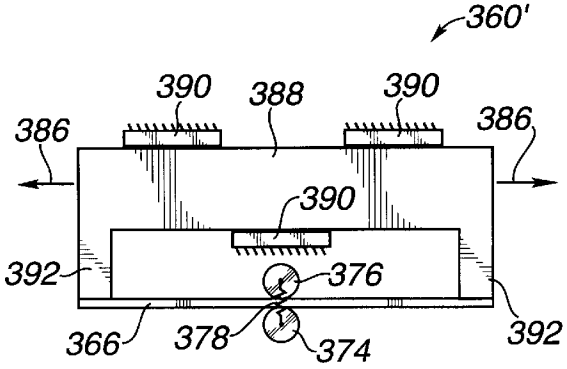

Fig. 23f

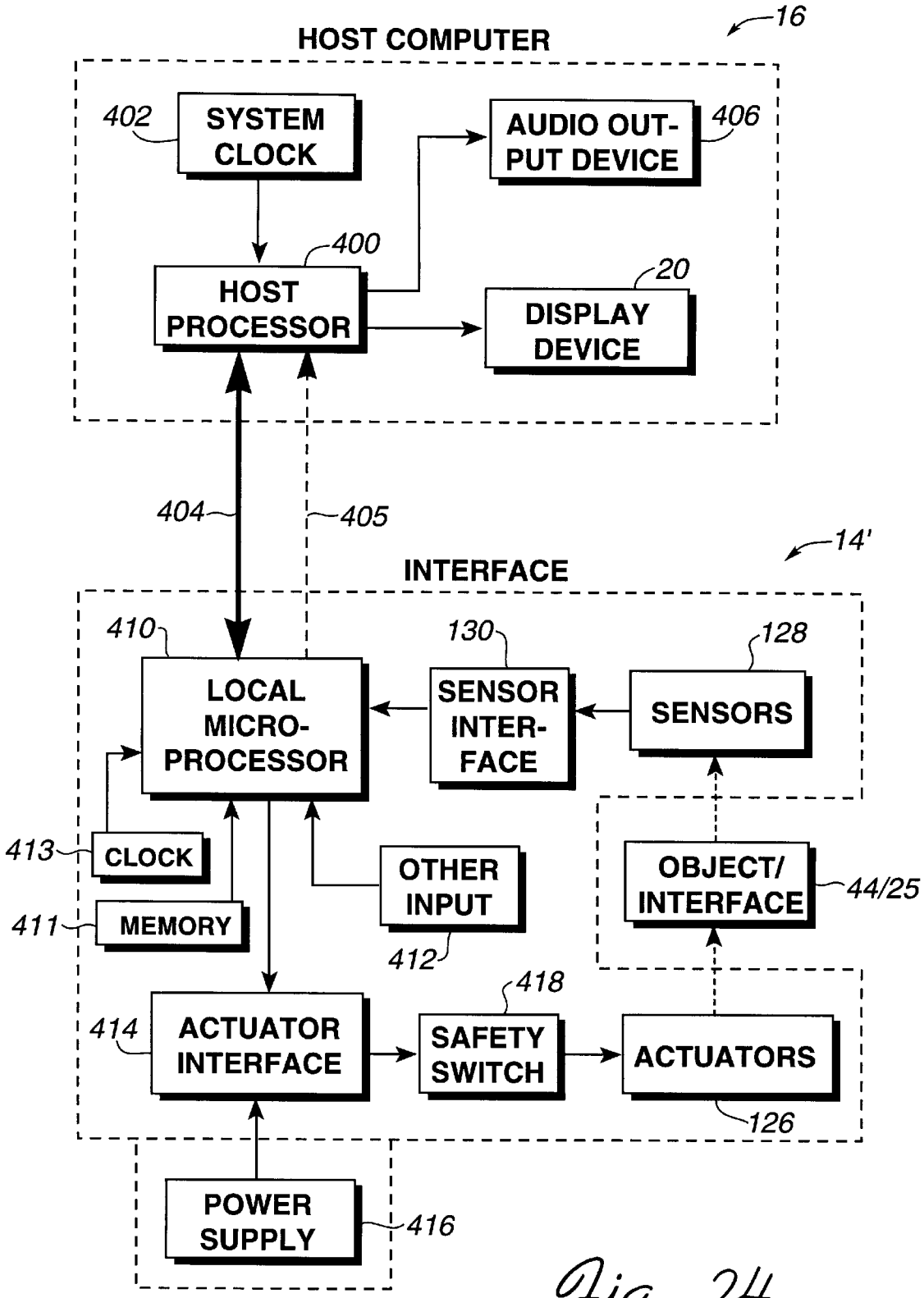
16
HOST COMPUTER
402
SYSTEM CLOCK
AUDIO OUT-PUT DEVICE
406
400
HOST PROCESSOR
20
DISPLAY DEVICE
404
405
14'
INTERFACE
410
LOCAL MICRO-PROCESSOR
130
SENSOR INTER-FACE
128
SENSORS
413
CLOCK
411
MEMORY
OTHER INPUT
412
OBJECT/ INTERFACE
44/25
418
414
ACTUATOR INTERFACE
SAFETY SWITCH
ACTUATORS
126
POWER SUPPLY
416

Fig. 24

HIGH BANDWIDTH FORCE FEEDBACK INTERFACE USING VOICE COILS AND FLEXURES

CROSS REFERENCE TO RELATED APPLICATIONS

This application is a continuation-in-part of parent patent application Ser. No. 08/461,170, filed Jun. 5, 1995, entitled, "Electromechanical Human-Computer Interface with Force Feedback", now U.S. Pat. No. 5,576,727, which is a continuation of application Ser. No. 08/092,974, filed Jul. 16, 1993, on behalf of Louis B. Rosenberg et al., entitled, "Three-Dimensional Mechanical Mouse," and a continuation-in-part of co-pending parent patent application Ser. No. 08/374,288, filed Jan. 18, 1995 on behalf of Louis B. Rosenberg, entitled, "Method and Apparatus for Providing High Bandwidth, Low Noise Mechanical I/O for Computer Systems," both assigned to the assignee of this present application, and both of which are hereby incorporated by reference herein.

BACKGROUND OF THE INVENTION

The present invention relates generally to interface devices between humans and computers, and more particularly to computer interface devices that provide force feedback to the user.

Virtual reality computer systems provide users with the illusion that they are part of a "virtual" environment. A virtual reality system will typically include a computer processor, such as a personal computer or workstation, specialized virtual reality software, and virtual reality I/O devices such as head mounted displays, sensor gloves, three dimensional ("3D") pointers, etc.

Virtual reality computer systems can be used for training. In many fields, such as aviation and vehicle and systems operation, virtual reality systems have been used successfully to allow a user to learn from and experience a realistic "virtual" environment. The appeal of using virtual reality computer systems for training relates, in part, to the ability of such systems to allow trainees the luxury of confidently operating in a highly realistic environment and making mistakes without "real world" consequences. For example, a virtual reality computer system can allow a doctor-trainee or other human operator or user to "manipulate" a scalpel or probe within a computer-simulated "body", and thereby perform medical procedures on a virtual patient. In this instance, the I/O device which is typically a 3D pointer, stylus, or the like is used to represent a surgical instrument such as a scalpel or probe. As the "scalpel" or "probe" moves within a provided space or structure, results of such movement are updated and displayed in a body image displayed on the screen of the computer system so that the operator can gain the experience of performing such a procedure without practicing on an actual human being or a cadaver. In other applications, virtual reality computer systems allow a user to handle and manipulate the controls of complicated and expensive vehicles and machinery for training and/or entertainment purposes. For example, a pilot or astronaut in training can operate a fighter aircraft or spacecraft by manipulating controls such as a control joystick and other buttons and view the results of controlling the aircraft on a virtual reality simulation of the aircraft in flight. In yet other applications, a user can manipulate objects and tools in the real world, such as a stylus, and view the results of the manipulation in a virtual reality world with a "virtual stylus" viewed on a screen, in 3-D goggles, etc.

For virtual reality systems to provide a realistic (and therefore effective) experience for the user, sensory feedback and manual interaction should be as natural as possible. As virtual reality systems become more powerful and as the number of potential applications increases, there is a growing need for specific human/computer interface devices which allow users to interface with computer simulations with tools that realistically emulate the activities being represented within the virtual simulation. While the state of the art in virtual simulation and medical imaging provides a rich and realistic visual feedback, there is a great need for new human/computer interface tools which allow users to perform natural manual interactions with the computer simulation.

In addition to sensing and tracking a user's manual activity and feeding such information to the controlling computer to provide a 3D visual representation to the user, a human interface mechanism should also provide force or tactile ("haptic") feedback to the user. The need for the user to obtain realistic tactile information and experience tactile sensation is extensive in many kinds of simulation and other applications. For example, in medical/surgical simulations, the "feel" of a probe or scalpel simulator is important as the probe is moved within the simulated body. It would invaluable to a medical trainee to learn how an instrument moves within a body, how much force is required depending on the operation performed, the space available in a body to manipulate an instrument, etc. In simulations of vehicles or equipment, force feedback for controls such as a joystick can be necessary to realistically teach a user the force required to move the joystick when steering in specific situations, such as in a high acceleration environment of an aircraft. In virtual world simulations where the user can manipulate objects, force feedback is necessary to realistically simulate physical objects; for example, if a user touches a pen to a table, the user should feel the impact of the pen on the table. An effective human/computer interface not only acts as an input device for tracking motion, but also as an output device for producing realistic tactile sensations. A "high bandwidth" interface system, which is an interface that accurately responds to signals having fast changes and a broad range of frequencies as well as providing such signals accurately to a control system, is therefore desirable in these and other applications.

In addition, there is a desire to provide force feedback to users of computer systems in the entertainment industry. Joysticks and other interface devices can be used to provide force feedback to a user playing a video game or experiencing a simulation for entertainment purposes. Through such an interface device, a computer system can convey to the user the physical sensation of colliding into a wall, moving through a liquid, driving over a bumpy road, and other sensations. The user can thus experience an entire sensory dimension in the gaming experience that was previously absent. Force feedback interfaces can provide a whole new modality for human-computer interaction.

There are number of devices that are commercially available for interfacing a human with a computer for virtual reality simulations. There are, for example, 2-dimensional input devices such as mice, trackballs, joysticks, and digitizing tablets. However, 2-dimensional input devices tend to be awkward and inadequate to the task of interfacing with 3-dimensional virtual reality simulations. 3-dimensional interface devices are also available. A 3-dimensional human/computer interface tool sold under the trademark Immersion PROBE^{tm} is marketed by Immersion Human Interface Corporation of Santa Clara, Calif., and allows manual control in

3-dimensional virtual reality computer environments. A pen-like stylus allows for dexterous 3-dimensional manipulation in six degrees of freedom, and the position and orientation of the stylus is communicated to a host computer. The Immersion PROBE, however, does not provide force feedback to a user and thus does not allow a user to experience an entire sensory dimension in virtual reality simulations. Prior art force feedback joysticks provide physical sensations to the user by controlling motors that are coupled to the joystick.

In typical multi-degree of freedom apparatuses that include force feedback, there are several disadvantages. Since actuators which supply force feedback tend to be heavier and larger than sensors, they would provide inertial constraints if added to a device such as the Immersion PROBE. There is also the problem of coupled actuators. In a typical force feedback device, a serial chain of links and actuators is implemented to achieve multiple degrees of freedom in a desired object positioned at the end of the chain, i.e., each actuator is coupled to the previous actuator. The user who manipulates the object must carry the inertia of all of the subsequent actuators and links except for the first actuator in the chain, which is grounded. While it is possible to ground all of the actuators in a serial chain by using a complex transmission of cables or belts, the end result is a low stiffness, high friction, high damping transmission which corrupts the bandwidth of the system, providing the user with an unresponsive and inaccurate interface. These types of interfaces also introduce tactile "noise" to the user through friction and compliance in signal transmission and limit the degree of sensitivity conveyed to the user through the actuators of the device.

Other existing devices provide force feedback to a user. In U.S. Pat. No. 5,184,319, by J. Kramer, an interface is described which provides force and texture information to a user of a computer system. The interface consists of an glove or "exoskeleton" which is worn over the user's appendages, such as fingers, arms, or body. Forces can be applied to the user's appendages using tendon assemblies and actuators controlled by a computer system to simulate force and textual feedback. However, the system described by Kramer is not easily applicable to simulation environments such as those mentioned above where an object is referenced in 3D space and force feedback is applied to the object. The forces applied to the user in Kramer are with reference to the body of the user; the absolute location of the user's appendages are not easily calculated. In addition, the exoskeleton devices of Kramer can be cumbersome or even dangerous to the user if extensive devices are worn over the user's appendages. Furthermore, the devices disclosed in Kramer are complex mechanisms in which many actuators must be used to provide force feedback to the user.

In addition, low-cost and portable mechanical interfaces which can provide force feedback are desirable. For example, personal computers for the home consumer are becoming powerful and fast enough to provide force feedback to the typical mass market consumer. A need is thus arising to be able to manufacture and market force feedback interfaces as cheaply and as efficiently as possible. The cost, complexity, reliability, and size of a force feedback interface for home use should be practical enough to mass produce the devices. In addition, aesthetic concerns such as compactness and operating noise level of a force feedback device are of concern in the home market. Since the prior art feedback interfaces are mainly addressed to specific applications in industry, most force feedback mechanisms are costly, large, heavy, have significant power requirements, are difficult to program for applications. The prior art devices require high speed control signals from a controlling computer for stability, which usually requires more expensive and complex electronics. In addition, the prior art force feedback devices are typically large and noisy. These factors provide many obstacles to the would-be manufacturer of force-feedback interfaces to the home computer market.

Therefore, a less complex, less expensive alternative to a human/computer interface tool having force feedback, lower inertia, higher bandwidth, and less noise is desirable for certain applications.

SUMMARY OF THE INVENTION

The present invention provides a human/computer interface apparatus and method which can provide from one to six degrees of freedom to a user-manipulable object and low cost, highly realistic force feedback to the user of the apparatus. The structure of the apparatus permits transducers to be positioned such that their inertial contribution to the system is very low. A number of the members of the mechanical interface can be manufactured as a single member, providing a low cost interface for a high volume market. In addition, a friction drive mechanism and voice coil actuators provide additional low cost alternatives for the interface.

An interface apparatus and method of the present invention for interfacing the motion of a user-manipulable object with an electrical system includes a user object physically contacted by a user. A gimbal mechanism is coupled to the user object, such as a joystick or a medical tool, and provides at least two degrees of freedom to the user object, where the gimbal mechanism includes multiple members. A selected number of those members are segments formed as a unitary member which provides flex between the selected members. An actuator applies a force along a degree of freedom to the user object in response to electrical signals produced by the electrical system. A sensor detects a position of the user object along the degree of freedom and outputs sensor signals to the electrical system. The actuator and sensor thus provide an electromechanical interface between the user object and the electrical system. An actuator provides force to the user object along each degree of freedom, and the actuators are decoupled from each other.

The gimbal mechanism preferably provides at least two revolute degrees of freedom to the user object about axes of rotation. Alternatively, the gimbal mechanism can provide at least two linear degrees of freedom along linear axes. In a preferred embodiment, the multiple members of the gimbal mechanism are formed as a closed-loop linkage. The linkage can include four members that are flexibly coupled to each other as segments of the unitary member. The four members include first and second extension members and first and second flexible central members, where the central members are each coupled to an extension member and to each other at the user object. A ground member is coupled to a ground surface and is rotatably coupled to the unitary flexible member by bearings. Other embodiments include coupling an object member to the user object and to the central members, and rotating the object member in a third "spin" degree of freedom, where the rotation in the third degree of freedom is allowed by the flexibility of the central members. In yet other embodiments, the ends of the central members are rotatably coupled to the extension members by bearings, and the central members are flexibly coupled to the user object. In another embodiment, the ends of the central members are flexibly coupled to the extension members and

the central members are rotatably coupled to the user object by a bearing. In yet another embodiment, a third central member is flexibly coupled between one of the extension members and the user object. A linear axis member can be coupled to the gimbal mechanism to provide the user object with a third linear degree of freedom. A passive damper element can also be coupled to at least one member of the gimbal mechanism to increase dynamic stability of the interface system. Finally, a capstan drive mechanism, including a cable and pully, can used to transmit forces to and from the actuator/sensor and the user with no substantial backlash.

In another preferred embodiment, the interface apparatus interfaces the motion of the user object with the electrical system, which is a host computer. The host computer system can display images to the user on a display screen. A local microprocessor, separate from the host computer and controlled by software instructions, is used to communicate with the host computer via a communication interface by receiving a host command from the host computer. The actuator applies a force to the gimbal mechanism along a degree of freedom to the user object in accordance with a processor command received from the processor. The processor command is derived from the host command. Finally, the sensor detects positions of the user object along a degree of freedom and outputs the sensor signals to the host computer system. The sensor signals include information representative of the position of the user object. Preferably, the sensor is electrically coupled to the processor and outputs the sensor signals to the processor, and the processor sends the sensor signals to the host computer. The processor provides the processor command to the actuator using a processor subroutine selected in accordance with the host command and stored in a memory device. The processor also utilizes the sensor signals to help determine a force output by the actuator. In addition, the processor preferably can use timing information from a clock coupled to the processor to determine the force output by the actuator. The communication interface can include a serial interface which, although relatively slow, may be used to provide accurate force feedback by using the local microprocessor.

In yet another preferred embodiment of an interface apparatus of the present invention, the actuators for applying forces to the user object include voice coil actuators. These actuators apply a current to a wire coil within a magnetic field to produce a force on the coil and a moveable member to which the coil is attached. The produced force has a particular direction depending on the direction of a current flowed through said coil and a magnitude depending on the magnitude of the current. Preferably, an electrical interface is electrically coupled between the voice coil actuators and the electrical system/host computer, and the electrical interface preferably includes a voice coil driver chip for driving the voice coil actuators. The voice coil driver chip preferably has a variable gain of voltage input to current output to provide more realistic and a greater range of forces. In an alternate embodiment, the wire coil includes multiple sub-coils that each include a different number of loops. Constant magnitude currents can thus be flowed through selected sub-coils to create different force values on the user object. In addition, the voice coil may includes one coil of wire to apply the force to the user object, and a second coil of wire used as a sensor for sensing a velocity of the user-manipulable object.

In one preferred voice coil actuator interface embodiment, the user object is coupled to a planar member, such as a circuit board. The circuit board is translatable in two degrees of freedom, and this translation causes the user object to move in two user object degrees of freedom. In one embodiment, the user object is coupled to a ball joint that is rotatable in a socket, such that translation of the circuit board causes the ball joint to rotate in the socket and thus causes the user object to pivot in two rotary two degrees of freedom. In another embodiment, the user object is coupled directly to the circuit board and is translated in linear degrees of freedom as the planar member is translated. The coils of wire included in the voice coil actuators can be etched onto the circuit board. In addition, the voice coil driver chips used for driving the voice coil actuators, and other electronic components, can be included on the circuit board.

In another preferred embodiment, the interface apparatus includes a friction drive mechanism coupled between an actuator and a gimbal mechanism of the interface apparatus. Force from the actuator is transmitted to the gimbal mechanism through frictional contact of members of the friction drive mechanism. The friction drive mechanism preferably includes a rotatable drum having a drive bar. A drive roller is coupled to the actuator and frictionally engages the drive bar to rotate the drum and transmit a force to the object in a degree of freedom. Preferably, one or more passive rollers are frictionally engaged with the drive bar on the opposite side of the drive bar to the drive roller, so that a greater compression force is provided between the drive roller and the drive bar. The passive rollers can be spring loaded to the drive roller to provide greater compression force. Preferably, a friction drive mechanism is provided for a second degree of freedom actuator as well. In an alternate embodiment, the friction drive mechanism includes a translatable drum having a drive bar, where the drive roller frictionally engages the drive bar to translate the drum and apply a linear force to the object in a linear degree of freedom.

The interface apparatus of the present invention includes several low cost components that are suitable for providing accurate force feedback for the home market and other markets. The flexible unitary member of the preferred gimbal mechanism can be produced as one part without incurring expenses for bearings and assembly procedures. The embodiments of the present invention including the voice coil actuators utilize readily-available, cheap components that are able to produce realistic forces for the user. The friction drive mechanism of the present invention is able to transmit forces and provide mechanical advantage using low cost parts. These improvements allow a computer system to have more complete and accurate control over a low-cost interface providing realistic force feedback.

These and other advantages of the present invention will become apparent to those skilled in the art upon a reading of the following specification of the invention and a study of the several figures of the drawing.

BRIEF DESCRIPTION OF THE DRAWINGS

FIG. **1** is a perspective view of a virtual reality system which employs an apparatus of the present invention to interface a laparoscope tool handle with a computer system;

FIG. **2** is a perspective view of a mechanical apparatus of the present invention for providing mechanical input and output to a computer system;

FIG. **3** is a perspective front view of a preferred embodiment of the mechanical apparatus of FIG. **2**;

FIG. **4** is a perspective rear view of the embodiment of the mechanical apparatus of FIG. **3**;

FIG. **5** is a perspective detailed view of a capstan drive mechanism used for two degrees of motion in the present invention;

FIG. **5***a* is a side elevational view of the capstan drive mechanism shown in FIG. **5**;

FIG. **5***b* is a detailed side view of a pulley and cable of the capstan drive mechanism of FIG. **5**;

FIG. **6** is a perspective view of a center capstan drive mechanism for a linear axis member of the mechanical apparatus shown in FIG. **3**;

FIG. **6***a* is a cross sectional top view of a pulley and linear axis member used in the capstan drive mechanism of FIG. **6**;

FIG. **6***b* is a cross sectional side view of the linear axis member and transducer shown in FIG. **6**;

FIG. **7** is a perspective view of an embodiment of the apparatus of FIG. **2** having a stylus object for the user;

FIG. **8** is a perspective view of an embodiment of the apparatus of FIG. **2** having a joystick object for the user;

FIG. **9** is a block diagram of a computer and the interface between the computer and the mechanical apparatus of FIG. **2**;

FIG. **10** is a schematic diagram of a suitable circuit for a digital to analog controller of the interface of FIG. **9**;

FIG. **11** is a schematic diagram of a suitable power amplification circuit for powering the actuators of the present invention as shown in FIG. **9**;

FIG. **12** is a perspective view of an alternate embodiment of the mechanical apparatus of FIG. **2** including flexible members;

FIG. **13** is a top plan view of the mechanical apparatus of FIG. **12**;

FIG. **14** is a perspective view of a second alternate embodiment of the mechanical apparatus of FIG. **12**;

FIG. **15** is a perspective view of a third alternate embodiment of the mechanical apparatus of FIG. **12**;

FIG. **16** is a perspective view of a fourth alternate embodiment of the mechanical apparatus of FIG. **12**;

FIG. **17** is a perspective view of a fifth alternate embodiment of the mechanical apparatus of FIG. **12**;

FIG. **18** is a perspective view of the mechanical apparatus of FIG. **2** including a voice coil actuator;

FIG. **19***a* is a side sectional view of the voice coil actuator of FIG. **18**;

FIG. **19***b* is a top plan view of the voice coil actuator of FIG. **19***a;*

FIGS. **20***a*–**20***e* are schematic diagrams of an alternate embodiment of the voice coil actuator of FIG. **19***a;*

FIG. **21***a* is a perspective view of an interface apparatus of the present invention including linear voice coil actuators;

FIG. **21***b* is a side sectional view showing a linear voice coil actuator of FIG. **21***a;*

FIG. **21***c* is a perspective view of an alternate embodiment of the interface apparatus of FIG. **21***a;*

FIG. **22***a* is a top plan view of an interface apparatus of the present invention having linear voice coil actuators on a circuit board and in which the user object can be moved in rotary degrees of freedom;

FIG. **22***b* is a side elevational view of the interface apparatus of FIG. **22***a;*

FIG. **22***c* is a top plan view of an alternate embodiment of the interface apparatus of FIG. **22***a* using a different anti-rotation flexure;

FIG. **22***d* is a top plan view of an alternate embodiment of the interface apparatus of FIG. **22***a* in which the user object can be moved in linear degrees of freedom;

FIG. **22***e* is a side elevational view of the interface apparatus of FIG. **22***c;*

FIGS. **23***a* to **23***f* are side elevational views of a friction drive of the present invention suitable for use with the interface apparatus of the present invention; and

FIG. **24** is a block diagram of a host computer and an alternative embodiment of the electronic interface between the computer and an interface apparatus of the present invention.

DETAILED DESCRIPTION OF PREFERRED EMBODIMENTS

FIG. **1** illustrates an example of the use of the present invention for medical simulation purposes. A virtual reality system **10** used to simulate a medical procedure includes a human/computer interface apparatus **12**, an electronic interface **14**, and a host computer **16**. The illustrated virtual reality system **10** is directed to a virtual reality simulation of a laparoscopic surgery procedure.

The handle **26** of a laparoscopic tool **18** used in conjunction with the present invention is manipulated by an operator and virtual reality images are displayed on a display screen **20** of the digital processing system in response to such manipulations. Display screen **20** can be a standard display screen or CRT, 3-D goggles, or any other visual interface. The digital processing system is typically a host computer **16**. Preferably, the host computer is a personal computer or workstation, such as an IBM-PC AT or Macintosh personal computer, or a SUN or Silicon Graphics workstation. For example, the computer **16** can operate under the MS-DOS operating system in conformance with an IBM PC AT standard. Alternatively, host computer system **12** can be one of a variety of home video game systems commonly connected to a television set, such as systems available from Nintendo, Sega, or Sony. In other embodiments, home computer system **12** can be a "set top box" which can be used, for example, to provide interactive television functions to users.

Host computer **16** implements a host application program with which a user is interacting via peripherals and interface device **14**. For example, the host application program can be a video game, medical simulation, scientific analysis program, or even an operating system or other application program that utilizes force feedback. Typically, the host application provides images to be displayed on a display output device, as described below, and/or other feedback, such as auditory signals. The medical simulation example of FIG. **1** includes a host medical simulation application program. Such software is commercially available as, for example, Teleos™ from High Techsplanations of Rockville, Md. Suitable software drivers which interface such simulation software with computer input/output (I/O) devices are available from Immersion Human Interface Corporation of Santa Clara, Calif. Alternatively, display screen **20** can display images from a game application program. For example, images describing a point of view from a first-person perspective can be displayed, as in a virtual reality game. Or, images describing a third-person perspective of objects, backgrounds, etc. can be displayed.

One example of a human/interface apparatus **12** as illustrated herein is used to simulate a laparoscopic medical procedure. In addition to the handle of a standard laparoscopic tool **18**, the human/interface apparatus **12** may include a barrier **22** and a standard laparoscopic trocar **24** (or a facsimile of a trocar). The barrier **22** is used to represent portion of the skin covering the body of a patient. Trocar **24**

is inserted into the body of the virtual patient to provide an entry and removal point from the body of the patient for the laparoscopic tool **18**, and to allow the manipulation of the laparoscopic tool. Laparoscopic tools and trocars **24** are commercially available from sources such as U.S. Surgical of Connecticut. Barrier **22** and trocar **24** can be omitted from apparatus **12** in other embodiments. Preferably, the laparoscopic tool **18** is modified; in the preferred embodiment, the shaft is replaced by a linear axis member of the present invention, as described below. In other embodiments, the end of the shaft of the tool (such as any cutting edges) can be removed. The end of the laparoscopic tool **18** is not required for the virtual reality simulation, and is removed to prevent any potential damage to persons or property.

The laparoscopic tool **18** includes a handle or "grip" portion **26** and a shaft portion **28**. The shaft portion is an elongated mechanical object and, in particular, is an elongated cylindrical object, described in greater detail below. In one embodiment, the present invention is concerned with tracking the movement of the shaft portion **28** in three-dimensional space, where the movement has been constrained such that the shaft portion **28** has only three or four free degrees of motion. This is a good simulation of the real use of a laparoscopic tool **18** in that once it is inserted into a trocar **24** and through the mechanical apparatus **25**, it is limited to about four degrees of freedom. More particularly, the shaft **28** is constrained at some point of along its length such that it can move with four degrees of freedom within the patient's body.

A mechanical apparatus **25** for interfacing mechanical input and output is shown within the "body" of the patient in phantom lines. When a surface is generated on the computer screen, the computer will send feedback signals to the tool **18** and mechanical apparatus **25**, which has actuators for generating forces in response to the position of a virtual laparoscopic tool relative to the surface depicted on the computer screen. Force is applied for example, by powering the actuators appropriate to the images portrayed on the screen. Mechanical apparatus **25** is shown in greater detail with respect to FIGS. **2** and **12**.

While one embodiment of the present invention will be discussed with reference to the laparoscopic tool **18**, it will be appreciated that a great number of other types of objects can be used with the method and apparatus of the present invention. In fact, the present invention can be used with any mechanical object where it is desirable to provide a human/computer interface with one to six degrees of freedom. Such objects may include endoscopic or other similar surgical tools used in medical procedures, catheters, hypodermic needles, wires, fiber optic bundles, styluses, joysticks, screw drivers, pool cues, etc. Some of these other objects are described in detail subsequently.

The electronic interface **14** is a component of the human/computer interface apparatus **12** and may couple the apparatus **12** to the host computer **16**. Electronic interface **14** can be included within a housing of mechanical apparatus **25** or be provided as a separate unit, as shown in FIG. **1**. More particularly, interface **14** is used in preferred embodiments to couple the various actuators and sensors of apparatus **25** (described in detail below) to computer **16**. One suitable embodiment of interface **14** is described in detail with reference to FIG. **9**, in which the interface can include a dedicated interface card to be plugged into computer **16**. A different embodiment **14'** of interface **14** is described in detail with respect to FIG. **20**, in which the interface includes a microprocessor local to the apparatus **12** and can be coupled to computer **16** through a slower, serial interface or a parallel interface.

The electronic interface **14** can be coupled to mechanical apparatus **25** of the apparatus **12** by a cable **30** (or may be included within the housing of apparatus **12**) and is coupled to the computer **16** by a cable **32** (or may be directly connected to the computer using a interface card). In other embodiments, signals can be sent to and from interface **14** and computer **16** by wireless transmission and reception. In some embodiments of the present invention, interface **14** serves solely as an input device for the computer **16**. In other embodiments of the present invention, interface **14** serves solely as an output device for the computer **16**. In preferred embodiments of the present invention, the interface **14** serves as an input/output (I/O) device for the computer **16**. The interface **14** can also receive inputs from other input devices or controls that are associated with apparatus **12** and can relay those inputs to computer **16**. For example, commands sent by the user activating a button on apparatus **12** can be relayed to computer **16** to implement a command or cause the computer **16** to output a command to the apparatus **12**. Such input devices are described in greater detail with respect to FIG. **24**.

In FIG. **2**, a perspective view of mechanical apparatus **25** for providing mechanical input and output in accordance with the present invention is shown. Apparatus **25** includes a gimbal mechanism **38** and a linear axis member **40**. A user object **44** is preferably coupled to linear axis member **40**.

Gimbal mechanism **38**, in the described embodiment, provides support for apparatus **25** on a grounded surface **56** (schematically shown as part of member **46**). Gimbal mechanism **38** is preferably a five-member linkage that includes a ground member **46**, extension members **48***a* and **48***b*, and central members **50***a* and **50***b*. Ground member **46** is coupled to a base or surface which provides stability for apparatus **25**. Ground member **46** is shown in FIG. **2** as two separate members coupled together through grounded surface **56**. The members of gimbal mechanism **38** are rotatably coupled to one another through the use of rotatable bearings or pivots, wherein extension member **48***a* is rotatably coupled to ground member **46** by bearing **43***a* and can rotate about an axis A, central member **50***a* is rotatably coupled to extension member **48***a* by bearing **45***a* and can rotate about a floating axis D, extension member **48***b* is rotatably coupled to ground member **46** by bearing **43***b* and can rotate about axis B, central member **50***b* is rotatably coupled to extension member **48***b* by bearing **45***b* and can rotate about floating axis E, and central member **50***a* is rotatably coupled to central member **50***b* by bearing **47** at a center point P at the intersection of axes D and E. Preferably, central member **50***a* is coupled to one rotatable portion **47***a* of bearing **47**, and central member **50***b* is coupled to the other rotatable portion **47***b* of bearing **47**. The axes D and E are "floating" in the sense that they are not fixed in one position as are axes A and B. Axes A and B are substantially mutually perpendicular. As used herein, "substantially perpendicular" will mean that two objects or axis are exactly or almost perpendicular, i.e. at least within five degrees or ten degrees of perpendicular, or more preferably within less than one degree of perpendicular. Similarly, the term "substantially parallel" will mean that two objects or axis are exactly or almost parallel, i.e. are at least within five or ten degrees of parallel, and are preferably within less than one degree of parallel.

Gimbal mechanism **38** is formed as a five member closed chain. Each end of one member is coupled to the end of a another member. The five-member linkage is arranged such that extension member **48***a*, central member **50***a*, and central member **50***b* can be rotated about axis A in a first degree of freedom. The linkage is also arranged such that extension

member **48***b,* central member **50***b,* and central member **50***a* can be rotated about axis B in a second degree of freedom. When object **44** is positioned at the "origin" as shown in FIG. **2**, an angle θ between the central members **50***a* and **50***b* is about 90 degrees. When object **44** is rotated about one or both axes A and B, central members move in two fashions: rotation about axis D or E by bearing **45***b* and/or **45***a,* and rotation about axis C by bearing **47** such that angle θ changes. For example, if the object **44** is moved into the page of FIG. **2** away from the viewer, or out of the plane of the page toward the viewer, then the angle θ will decrease. If the object is moved to the left or right as shown in FIG. **2**, the angle θ will increase.

Linear axis member **40** is preferably an elongated rod-like member which is coupled to central member **50***a* and central member **50***b* at the point of intersection P of axes A and B. As shown in FIG. **1**, linear axis member **40** can be used as shaft **28** of user object **44**. In other embodiments, linear axis member **40** is coupled to a different object. Linear axis member **40** is coupled to gimbal mechanism **38** such that it extends out of the plane defined by axis A and axis B. Linear axis member **40** can be rotated about axis A by rotating extension member **48***a,* central member **50***a,* and central member **50***b* in a first revolute degree of freedom, shown as arrow line **51**. Member **40** can also be rotated about axis B by rotating extension member **50***b* and the two central members about axis B in a second revolute degree of freedom, shown by arrow line **52**. Being also translatably coupled to the ends of central members **50***a* and **50***b,* linear axis member **40** can be linearly translated, independently with respect to the gimbal mechanism **38**, along floating axis C, providing a third degree of freedom as shown by arrows **53**. Axis C can, of course, be rotated about one or both axes A and B as member **40** is rotated about these axes.

Also preferably coupled to gimbal mechanism **38** and linear axis member **40** are transducers, such as sensors and actuators. Such transducers are preferably coupled at the link points between members of the apparatus and provide input to and output from an electrical system, such as computer **16**. Transducers that can be used with the present invention are described in greater detail with respect to FIG. **3**.

User object **44** is coupled to apparatus **25** and is preferably an interface object for a user to grasp or otherwise manipulate in three dimensional (3D) space. One example of a user object **44** is the grip **26** of a laparoscopic tool **18**, as shown in FIG. **1**. Shaft **28** of tool **18** can be implemented as part of linear axis member **40**. Other examples described in subsequent embodiments include a stylus and joystick. User object **44** may be moved in all three degrees of freedom provided by gimbal mechanism **38** and linear axis member **40** and additional degrees of freedom as described below. As user object **44** is moved about axis A, floating axis D varies its position, and as user object **44** is moved about axis B, floating axis E varies its position. The floating axes E and D are coincident with the fixed axes A and B, respectively, when the user object is in a center position as shown in FIG. **2**.

FIGS. **3** and **4** are perspective views of a specific embodiment of a mechanical apparatus **25'** for providing mechanical input and output to a computer system in accordance with the present invention. FIG. **3** shows a front view of apparatus **25'**, and FIG. **4** shows a rear view of the apparatus. Apparatus **25'** includes a gimbal mechanism **38**, a linear axis member **40**, and transducers **42**. A user object **44**, shown in this embodiment as a laparoscopic instrument having a grip portion **26**, is coupled to apparatus **25'**. Apparatus **25'** operates in substantially the same fashion as apparatus **25** described with reference to FIG. **2**.

Gimbal mechanism **38** provides support for apparatus **25'** on a grounded surface **56**, such as a table top or similar surface. The members and joints ("bearings") of gimbal mechanism **38** are preferably made of a lightweight, rigid, stiff metal, such as aluminum, but can also be made of other rigid materials such as other metals, plastic, etc. Gimbal mechanism **38** includes a ground member **46**, capstan drive mechanisms **58**, extension members **48***a* and **48***b,* central drive member **50***a,* and central link member **50***b*. Ground member **46** includes a base member **60** and vertical support members **62**. Base member **60** is coupled to grounded surface **56** and provides two outer vertical surfaces **61** which are in a substantially perpendicular relation which each other. A vertical support member **62** is coupled to each of these outer surfaces of base member **60** such that vertical members **62** are in a similar substantially 90-degree relation with each other.

A capstan drive mechanism **58** is preferably coupled to each vertical member **62**. Capstan drive mechanisms **58** are included in gimbal mechanism **38** to provide mechanical advantage without introducing friction and backlash to the system. A capstan drum **59** of each capstan drive mechanism is rotatably coupled to a corresponding vertical support member **62** to form axes of rotation A and B, which correspond to axes A and B as shown in FIG. **1**. The capstan drive mechanisms **58** are described in greater detail with respect to FIG. **5**.

Extension member **48***a* is rigidly coupled to capstan drum **59** and is rotated about axis A as capstan drum **59** is rotated. Likewise, extension member **48***b* is rigidly coupled to the other capstan drum **59** and can be rotated about axis B. Both extension members **48***a* and **48***b* are formed into a substantially 90-degree angle with a short end **49** coupled to capstan drum **59**. Central drive member **50***a* is rotatably coupled to a long end **55** of extension member **48***a* and extends at a substantially parallel relation with axis B. Similarly, central link member **50***b* is rotatably coupled to the long end of extension member **48***b* and extends at a substantially parallel relation to axis A (as better viewed in FIG. **4**). Central drive member **50***a* and central link member **50***b* are rotatably coupled to each other at the center of rotation of the gimbal mechanism, which is the point of intersection P of axes A and B. Bearing **64** connects the two central members **50***a* and **50***b* together at the intersection point P.

Gimbal mechanism **38** provides two degrees of freedom to an object positioned at or coupled to the center point P of rotation. An object at or coupled to point P can be rotated about axis A and B or have a combination of rotational movement about these axes.

Linear axis member **40** is a cylindrical member that is preferably coupled to central members **50***a* and **50***b* at intersection point P. In alternate embodiments, linear axis member **40** can be a non-cylindrical member having a cross-section of, for example, a square or other polygon. Member **40** is positioned through the center of bearing **64** and through holes in the central members **50***a* and **50***b*. The linear axis member can be linearly translated along axis C, providing a third degree of freedom to user object **44** coupled to the linear axis member. Linear axis member **40** can preferably be translated by a transducer **42** using a capstan drive mechanism similar to capstan drive mechanism **58**. The translation of linear axis member **40** is described in greater detail with respect to FIG. **6**.

Transducers **42** are preferably coupled to gimbal mechanism **38** to provide input and output signals between mechanical apparatus **25'** and computer **16**. In the described

embodiment, transducers **42** include two grounded transducers **66***a* and **66***b,* central transducer **68**, and shaft transducer **70**. The housing of grounded transducer **66***a* is preferably coupled to vertical support member **62** and preferably includes both an actuator for providing force in or otherwise influencing the first revolute degree of freedom about axis A and a sensor for measuring the position of object **44** in or otherwise influenced by the first degree of freedom about axis A, i.e., the transducer **66***a* is "associated with" or "related to" the first degree of freedom. A rotational shaft of actuator **66***a* is coupled to a pulley of capstan drive mechanism **58** to transmit input and output along the first degree of freedom. The capstan drive mechanism **58** is described in greater detail with respect to FIG. **5**. Grounded transducer **66***b* preferably corresponds to grounded transducer **66***a* in function and operation. Transducer **66***b* is coupled to the other vertical support member **62** and is an actuator/sensor which influences or is influenced by the second revolute degree of freedom about axis B.

Grounded transducers **66***a* and **66***b* are preferably bi-directional transducers which include sensors and actuators. The sensors are preferably relative optical encoders which provide signals to measure the angular rotation of a shaft of the transducer. The electrical outputs of the encoders are routed to computer interface **14** via buses **67***a* and **67***b* and are detailed with reference to FIG. **9**. Other types of sensors can also be used, such as potentiometers, etc. In addition, it is also possible to use non-contact sensors at different positions relative to mechanical apparatus **25**. For example, a Polhemus (magnetic) sensor can detect magnetic fields from objects; or, an optical sensor such as lateral effect photo diode includes a emitter/detector pair that detects positions of the emitter with respect to the detector in one or more degrees of freedom; for example, a photo diode by Hamamatsu Co., part S1743, can be used. These types of sensors are able to detect the position of object **44** in particular degrees of freedom without having to be coupled to a joint of the mechanical apparatus. Alternatively, sensors can be positioned at other locations of relative motion or joints of mechanical apparatus **25**.

It should be noted that the present invention can utilize both absolute and relative sensors. An absolute sensor is one which the angle of the sensor is known in absolute terms, such as with an analog potentiometer. Relative sensors only provide relative angle information, and thus require some form of calibration step which provide a reference position for the relative angle information. The sensors described herein are primarily relative sensors. In consequence, there is an implied calibration step after system power-up wherein the sensor's shaft is placed in a known position within the apparatus **25'** and a calibration signal is provided to the system to provide the reference position mentioned above. All angles provided by the sensors are thereafter relative to that reference position. Such calibration methods are well known to those skilled in the art and, therefore, will not be discussed in any great detail herein.

Transducers **66***a* and **66***b* also preferably include actuators. These actuators can be of two types: active actuators and passive actuators. Active actuators include linear current control motors, stepper motors, pneumatic/hydraulic active actuators, and other types of actuators that transmit a force to move an object. For example, active actuators can drive a rotational shaft about an axis in a rotary degree of freedom, or drive a linear shaft along a linear degree of freedom. Active transducers of the present invention are preferably bi-directional, meaning they can selectively transmit force along either direction of a degree of freedom. For example, DC servo motors can receive force control signals to control the direction and torque (force output) that is produced on a shaft. In the described embodiment, active linear current control motors, such as DC servo motors, are used. The control signals for the motor are produced by computer interface **14** on control buses **67***a* and **67***b* and are detailed with respect to FIG. **9**. The motors may include brakes which allow the rotation of the shaft to be halted in a short span of time. Also, the sensors and actuators in transducers **42** can be included together as a sensor/actuator pair transducers. A suitable transducer for the present invention including both an optical encoder and current controlled motor is a 20 W basket wound servo motor manufactured by Maxon.

In alternate embodiments, other types of active motors can also be used, such as a stepper motor, brushless DC motors, pneumatic/hydraulic actuators, a torquer (motor with limited angular range), or a voice coil, which are well known to those skilled in the art. Voice coils are described in greater detail with respect to FIG. **18**. Stepper motors and the like are not as well suited because stepper motor control involves the use of steps or pulses which can be felt as pulsations by the user, thus corrupting the virtual simulation. The present invention is better suited to the use of linear current controlled motors, which do not have this noise.

Passive actuators can also be used in transducers **66***a,* **66***b,* and **68**. Magnetic particle brakes, friction brakes, or pneumatic/hydraulic passive actuators can be used in addition to or instead of a motor to generate a damping resistance or friction in a degree of motion. An alternate preferred embodiment only including passive actuators may not be as realistic as an embodiment including motors; however, the passive actuators are typically safer for a user since the user does not have to fight generated forces. Passive actuators typically can only provide bi-directional resistance to a degree of motion. A suitable magnetic particle brake for interface device **14** is available from Force Limited, Inc. of Santa Monica, Calif.

In other embodiments, all or some of transducers **42** can include only sensors to provide an apparatus without force feedback along designated degrees of freedom. Similarly, all or some of transducers **42** can be implemented as actuators without sensors to provide only force feedback.

In addition, in some embodiments, passive (or "viscous") damper elements can be provided on the bearings of apparatus **25** to remove energy from the system and intentionally increase the dynamic stability of the mechanical system. This may have the side effect of degrading the bandwidth of the system; however, if other factors such as the speed of processor **410** (see FIG. **24**), rate of actuator control, and position sensing resolution already degrade the bandwidth, then such dampers may be acceptable. For example, inexpensive plastic dampers, such as rotational dampers produced by Fastex/Deltar, can be placed at desired bearing positions and have one end grounded. In other embodiments, this passive damping can be introduced by using the back electromotive force (EMF) of the actuators **42** to remove energy from the system. This can also be accomplished by using a shunt resistor coupled across the terminals of a motor or the coils of a voice coil actuator. Also, passive brakes, as mentioned above, can be used. In addition, in the voice coil embodiments (see FIGS. **18–22**), multiple wire coils can be provided, where some of the coils can be used to provide back EMF and damping forces.

Central transducer **68** is coupled to central drive member **50***a* and preferably includes an actuator for providing force

in the linear third degree of freedom along axis C and a sensor for measuring the position of object **44** along the third degree of freedom. The rotational shaft of central transducer **68** is coupled to a translation interface coupled to central drive member **50***a* which is described in greater detail with respect to FIG. **6**. In the described embodiment, central transducer **68** is an optical encoder and DC servo motor combination similar to the actuators **66***a* and **66***b* described above.

The transducers **66***a,* **66***b* and **68** of the described embodiment are advantageously positioned to provide a very low amount of inertia to the user handling object **44**. Transducer **66***a* and transducer **66***b* are decoupled, meaning that the transducers are both directly coupled to ground member **46** which is coupled to ground surface **56**, i.e. the ground surface carries the weight of the transducers, not the user handling object **44**. The weights and inertia of the transducers **66***a* and **66***b* are thus substantially negligible to a user handling and moving object **44**. This provides a more realistic interface to a virtual reality system, since the computer can control the transducers to provide substantially all of the forces felt by the user in these degrees of motion. Apparatus **25**' is a high bandwidth force feedback system, meaning that high frequency signals can be used to control transducers **42** and these high frequency signals will be applied to the user object with high precision, accuracy, and dependability. The user feels very little compliance or "mushiness" when handling object **44** due to the high bandwidth. In contrast, in typical prior art arrangements of multi-degree of freedom interfaces, one actuator "rides" upon another actuator in a serial chain of links and actuators. This low bandwidth arrangement causes the user to feel the inertia of coupled actuators when manipulating an object.

Central transducer **68** is positioned near the center of rotation of two revolute degrees of freedom. Though the transducer **68** is not grounded, its central position permits a minimal inertial contribution to the mechanical apparatus **25**' along the provided degrees of freedom. A user manipulating object **44** thus will feel minimal internal effects from the weight of transducers **66***a,* **66***b* and **68**.

Shaft transducer **70** preferably includes a sensor and is provided in the described embodiment to measure a fourth degree of freedom for object **44**. Shaft transducer **70** is preferably positioned at the end of linear axis member **40** that is opposite to the object **44** and measures the rotational position of object **44** about axis C in the fourth degree of freedom, as indicated by arrow **72**. Shaft transducer **70** is described in greater detail with respect to FIG. **6** and **6***b*. Preferably, shaft transducer **72** is implemented using an optical encoder similar to the encoders described above. A suitable input transducer for use in the present invention is an optical encoder model SI marketed by U.S. Digital of Vancouver, Wash. In the described embodiment, shaft transducer **70** only includes a sensor and not an actuator. This is because for typical medical procedures, which is one intended application for the embodiment shown in FIGS. **3** and **4**, rotational force feedback to a user about axis C is typically not required to simulate actual operating conditions. However, in alternate embodiments, an actuator such as a motor can be included in shaft transducer **70** similar to transducers **66***a,* **66***b,* and **68**.

Object **44** is shown in FIGS. **3** and **4** as a grip portion **26** of a laparoscopic tool similar to the tool shown in FIG. **1**. Shaft portion **28** is implemented as linear axis member **40**. A user can move the laparoscopic tool about axes A and B, and can translate the tool along axis C and rotate the tool about axis C. The movements in these four degrees of freedom will be sensed and tracked by computer system **16**. Forces can be applied preferably in the first three degrees of freedom by the computer system to simulate the tool impacting a portion of subject body, experiencing resistance moving through tissues, etc.

Optionally, additional transducers can be added to apparatus **25**' to provide additional degrees of freedom for object **44**. For example, a transducer can be added to grip **26** of laparoscopic tool **18** to sense when the user moves the two portions **26***a* and **26***b* relative to each other to simulate extending the cutting blade of the tool. Such a laparoscopic tool sensor is described in U.S. Pat. No. 5,623,582, filed Jul. 14, 1994 and entitled "Method and Apparatus for Providing Mechanical I/O for Computer Systems" assigned to the assignee of the present invention and incorporated herein by reference in its entirety.

FIG. **5** is a perspective view of a capstan drive mechanism **58** shown in some detail. As an example, the drive mechanism **58** coupled to extension arm **48***b* is shown; the other capstan drive **58** coupled to extension arm **48***a* is substantially similar to the mechanism presented here. Capstan drive mechanism **58** includes capstan drum **59**, capstan pulley **76**, and stop **78**. Capstan drum **59** is preferably a wedge-shaped member having leg portion **82** and a curved portion **84**. Other shapes of member **59** can also be used. Leg portion **82** is pivotally coupled to vertical support member **62** at axis B (or axis A for the opposing capstan drive mechanism). Extension member **48***b* is rigidly coupled to leg portion **82** such that when capstan drum **59** is rotated about axis B, extension member **48***b* is also rotated and maintains the position relative to leg portion **82** as shown in FIG. **5**. Curved portion **84** couples the two ends of leg portion **82** together and is preferably formed in an arc centered about axis B. Curved portion **84** is preferably positioned such that its bottom edge **86** is about 0.030 inches above pulley **76**.

Cable **80** is preferably a thin metal cable connected to curved portion **84** of the capstan drum. Other types of durable cables, cords, wire, etc. can be used as well. Cable **80** is attached at a first end to curved portion **84** near an end of leg portion **82** and is drawn tautly against the outer surface **86** of curved portion **84**. Cable **80** is wrapped around pulley **76** a number of times and is then again drawn tautly against outer surface **86**. The second end of cable **80** is firmly attached to the other end of curved portion **84** near the opposite leg of leg portion **82**. The cable transmits rotational force from pulley **76** to the capstan drum **59**, causing capstan drum **59** to rotate about axis B as explained below. The cable also transmits rotational force from drum **59** to the pulley and transducer **66***b*. The tension in cable **80** should be at a level so that negligible backlash or play occurs between capstan drum **59** and pulley **76**. Preferably, the tension of cable **80** can be adjusted by pulling more (or less) cable length through an end of curved portion **84**. Caps **81** on the ends of curved portion **84** can be used to easily tighten cable **80**. Each cap **81** is preferably tightly coupled to cable **80** and includes a pivot and tightening screw which allow the cap to move in a direction indicated by arrow **83** to tighten cable **80**.

Capstan pulley **76** is a threaded metal cylinder which transfers rotational force from transducer **66***b* to capstan drum **59** and from capstan drum **59** to transducer **66***b*. Pulley **76** is rotationally coupled to vertical support member **62** by a shaft **88** (shown in FIG. **5***a*) positioned through a bore of vertical member **62** and rigidly attached to pulley **76**. Transducer **66***b* is coupled to pulley **76** by shaft **88** through vertical support member **62**. Rotational force is applied from

transducer **66***b* to pulley **76** when the actuator of transducer **66***b* rotates the shaft. The pulley, in turn, transmits the rotational force to cable **80** and thus forces capstan drum **59** to rotate in a direction about axis B. Extension member **48***b* rotates with capstan drum **59**, thus causing force along the second degree of freedom for object **44**. Note that pulley **76**, capstan drum **59** and extension member **48***b* will only actually rotate if the user is not applying the same amount or a greater amount of rotational force to object **44** in the opposite direction to cancel the rotational movement. In any event, the user will feel the rotational force along the second degree of freedom in object **44** as force feedback.

The capstan mechanism **58** provides a mechanical advantage to apparatus **25**' so that the force output of the actuators can be increased. The ratio of the diameter of pulley **76** to the diameter of capstan drum **59** (i.e. double the distance from axis B to the bottom edge **86** of capstan drum **59**) dictates the amount of mechanical advantage, similar to a gear system. In the preferred embodiment, the ratio of drum to pulley is equal to 15:1, although other ratios can be used in other embodiments.

Similarly, when the user moves object **44** in the second degree of freedom, extension member **48***b* rotates about axis B and rotates capstan drum **59** about axis B as well. This movement causes cable **80** to move, which transmits the rotational force to pulley **76**. Pulley **76** rotates and causes shaft **88** to rotate, and the direction and magnitude of the movement is detected by the sensor of transducer **66***b*. A similar process occurs along the first degree of freedom for the other capstan drive mechanism **58**. As described above with respect to the actuators, the capstan drive mechanism provides a mechanical advantage to amplify the sensor resolution by a ratio of drum **59** to pulley **76** (15:1 in the preferred embodiment).

Stop **78** is rigidly coupled to vertical support member **62** a few millimeters above curved portion **84** of capstan drum **59**. Stop **78** is used to prevent capstan drum **59** from moving beyond a designated angular limit. Thus, drum **59** is constrained to movement within a range defined by the arc length between the ends of leg portion **82**. This constrained movement, in turn, constrains the movement of object **44** in the first two degrees of freedom. In the described embodiment, stop **78** is a cylindrical member inserted into a threaded bore in vertical support member **62**.

FIG. **5***a* is a side elevational view of capstan mechanism **58** as shown in FIG. **5**. Cable **80** is shown routed along the bottom side **86** of curved portion **84** of capstan drum **59**. Cable **80** is preferably wrapped around pulley **76** so that the cable is positioned between threads **90**, i.e., the cable is guided by the threads as shown in greater detail in FIG. **5***b*. As pulley **76** is rotated by transducer **66***b* or by the manipulations of the user, the portion of cable **80** wrapped around the pulley travels closer to or further from vertical support member **62**, depending on the direction that pulley **76** rotates. For example, if pulley **76** is rotated counterclockwise (when viewing the pulley as in FIG. **5**), then cable **80** moves toward vertical support member **62** as shown by arrow **92**. Capstan drum **59** also rotates clockwise as shown by arrow **94**. The threads of pulley **76** are used mainly to provide cable **80** with a better grip on pulley **76**. In alternate embodiments, pulley **76** includes no threads, and the high tension in cable **80** allows cable **80** to grip pulley **76**.

Capstan drive mechanism **58** is advantageously used in the present invention to provide transmission of forces and mechanical advantage between transducers **66***a* and **66***b* and object **44** without introducing substantial compliance, friction, or backlash to the system. A capstan drive provides increased stiffness, so that forces are transmitted with negligible stretch and compression of the components. The amount of friction is also reduced with a capstan drive mechanism so that substantially "noiseless" tactile signals can be provided to the user. In addition, the amount of backlash contributed by a capstan drive is also negligible. "Backlash" is the amount of play that occurs between two coupled rotating objects in a gear or pulley system. Two gears, belts, or other types of drive mechanisms could also be used in place of capstan drive mechanism **58** in alternate embodiments to transmit forces between transducer **66***a* and extension member **48***b*. However, gears and the like typically introduce some backlash in the system. In addition, a user might be able to feel the interlocking and grinding of gear teeth during rotation of gears when manipulating object **44**; the rotation in a capstan drive mechanism is much less noticeable.

FIG. **6** is a perspective view of central drive member **50***a* and linear axis member **40** shown in some detail. Central drive member **50***a* is shown in a partial cutaway view to expose the interior of member **50***a*. Central transducer **68** is coupled to one side of central drive member **50***a*. In the described embodiment, a capstan drive mechanism is used to transmit forces between transducer **68** and linear axis member **40** along the third degree of freedom. A rotatable shaft **98** of transducer **68** extends through a bore in the side wall of central drive member **50***a* and is coupled to a capstan pulley **100**. Pulley **100** is described in greater detail below with respect to FIG. **6***a*.

Linear axis member **40** preferably includes an exterior sleeve **91** and an interior shaft **93** (described with reference to FIG. **6***b*, below). Exterior sleeve **91** is preferably a partially cylindrical member having a flat **41** provided along its length. Flat **41** prevents sleeve **91** from rotating about axis C in the fourth degree of freedom described above. Linear axis member **40** is provided with a cable **99** which is secured on each end of member **40** by tension caps **101**. Cable **99** preferably runs down a majority of the length of exterior sleeve **91** on the surface of flat **41** and can be tightened, for example, by releasing a screw **97**, pulling an end of cable **99** until the desired tension is achieved, and tightening screw **97**. Similarly to the cable of the capstan mechanism described with reference to FIG. **5**, cable **99** should have a relatively high tension.

As shown in FIG. **6***a*, cable **99** is wrapped a number of times around pulley **100** so that forces can be transmitted between pulley **100** and linear axis member **40**. Pulley **100** preferably includes a central axle portion **103** and end lip portions **105**. Exterior sleeve **91** is preferably positioned such that flat **41** of the sleeve is touching or is very close to lip portions **105** on both sides of axle portion **103**. The cable **99** portion around pulley **100** is wrapped around central axle portion **103** and moves along portion **103** towards and away from shaft **98** as the pulley is rotated clockwise and counterclockwise, respectively. The diameter of axle portion **103** is smaller than lip portion **105**, providing space between the pulley **100** and flat **41** where cable **99** is attached and allowing free movement of the cable. Pulley **100** preferably does not include threads, unlike pulley **76**, since the tension in cable **99** allows the cable to grip pulley **100** tightly. In other embodiments, pulley **100** can be a threaded or unthreaded cylinder similar to capstan pulley **76** described with reference to FIG. **5**.

Using the capstan drive mechanism, transducer **68** can translate linear axis member **40** along axis C when the pulley is rotated by the actuator of transducer **68**. Likewise, when

linear axis member **40** is translated along axis C by the user manipulating object **44**, pulley **100** and shaft **98** are rotated; this rotation is detected by the sensor of transducer **68**. The capstan drive mechanism provides low friction and smooth, rigid operation for precise movement of linear axis member **40** and accurate position measurement of the member **40**.

Other drive mechanisms can also be used to transmit forces to linear axis member and receive positional information from member **40** along axis C. For example, a drive wheel made of a rubber-like material or other frictional material can be positioned on shaft **98** to contact linear axis member **40** along the edge of the wheel. The wheel can cause forces along member **40** from the friction between wheel and linear axis member. Such a drive wheel mechanism is disclosed in the abovementioned Pat. No. 5,623,582 as well as in U.S. Patent application Ser. No. 08/344,148, filed Nov. 23, 1994 and entitled "Method and Apparatus for Providing Mechanical I/O for Computer Systems Interfaced with Elongated Flexible Objects" assigned to the assignee of the present invention and incorporated herein by reference in its entirety. Linear axis member **40** can also be a single shaft in alternate embodiments instead of a dual part sleeve and shaft.

Referring to the cross sectional side view of member **40** and transducer **70** shown in FIG. **6***b,* interior shaft **93** is positioned inside hollow exterior sleeve **91** and is rotatably coupled to sleeve **91**. A first end **107** of shaft **93** preferably extends beyond sleeve **91** and is coupled to object **44**. When object **44** is rotated about axis C, shaft **93** is also rotated about axis C in the fourth degree of freedom within sleeve **91**. Shaft **93** is translated along axis C in the third degree of freedom when sleeve **91** is translated. Alternatively, interior shaft **93** can be coupled to a shaft of object **44** within exterior sleeve **91**. For example, a short portion of shaft **28** of laparoscopic tool **18**, as shown in FIG. **1**, can extend into sleeve **91** and be coupled to shaft **93** within the sleeve, or shaft **28** can extend all the way to transducer **70** and functionally be used as shaft **93**.

Shaft **93** is coupled at its second end **109** to transducer **70**, which, in the preferred embodiment, is an optical encoder sensor. The housing **111** of transducer **70** is rigidly coupled to exterior sleeve **91** by a cap **115**, and a shaft **113** of transducer **70** is coupled to interior shaft **93** so that transducer **70** can measure the rotational position of shaft **93** and object **44**. In alternate embodiments, an actuator can also be included in transducer **70** to provide rotational forces about axis C to shaft **93**.

FIG. **7** is a perspective view of an alternate embodiment of the mechanical apparatus **25**" and user object **44** of the present invention. Mechanical apparatus **25**" shown in FIG. **7** operates substantially the same as apparatus **25**' shown in FIGS. **3** and **4**. User object **44**, however, is a stylus **102** which the user can grasp and move in six degrees of freedom. By "grasp", it is meant that users may releasably engage a grip portion of the object in some fashion, such as by hand, with their fingertips, or even orally in the case of handicapped persons. Stylus **102** can be sensed and force can be applied in various degrees of freedom by a computer system and interface such as computer **16** and interface **14** of FIG. **1**. Stylus **102** can be used in virtual reality simulations in which the user can move the stylus in 3D space to point to objects, write words, drawings, or other images, etc. For example, a user can view a virtual environment generated on a computer screen or in 3D goggles. A virtual stylus can be presented in a virtual hand of the user. The computer system tracks the position of the stylus with sensors as the user moves it. The computer system also provides force feedback to the stylus when the user moves the stylus against a virtual desk top, writes on a virtual pad of paper, etc. It thus appears and feels to the user that the stylus is contacting a real surface.

Stylus **102** preferably is coupled to a floating gimbal mechanism **104** which provides two degrees of freedom in addition to the four degrees of freedom provided by apparatus **25**' described with reference to FIGS. **3** and **4**. Floating gimbal mechanism **104** includes a U-shaped member **106** which is rotatably coupled to an axis member **108** by a shaft **109** so that U-shaped member **106** can rotate about axis F. Axis member **108** is rigidly coupled to linear axis member **40**. In addition, the housing of a transducer **110** is coupled to U-shaped member **106** and a shaft of transducer **110** is coupled to shaft **109**. Shaft **109** is preferably locked into position within axis member **108** so that as U-shaped member **106** is rotated, shaft **109** does not rotate. Transducer **110** is preferably a sensor, such as an optical encoder as described above with reference to transducer **70**, which measures the rotation of U-shaped member **106** about axis F in a fifth degree of freedom and provides electrical signals indicating such movement to interface **14**.

Stylus **102** is preferably rotatably coupled to U-shaped member **106** by a shaft (not shown) extending through the U-shaped member. This shaft is coupled to a shaft of transducer **112**, the housing of which is coupled to U-shaped member **106** as shown. Transducer **112** is preferably a sensor, such as an optical encoder as described above, which measures the rotation of stylus **102** about the lengthwise axis G of the stylus in a sixth degree of freedom.

In the described embodiment of FIG. **7**, six degrees of freedom of stylus **102** are sensed. Thus, both the position (x, y, z coordinates) and the orientation (roll, pitch, yaw) of the stylus can be detected by computer **16** to provide a highly realistic simulation. Other mechanisms besides the floating gimbal mechanism **104** can be used to provide the fifth and sixth degrees of freedom. In addition, forces can be applied in three degrees of freedom for stylus **102** to provide 3D force feedback. In alternate embodiments, actuators can also be included in transducers **70**, **110**, and **112**. However, actuators are preferably not included for the fourth, fifth, and sixth degrees of freedom in the described embodiment, since actuators are typically heavier than sensors and, when positioned at the locations of transducers **70**, **100**, and **112**, would create more inertia in the system. In addition, the force feedback for the designated three degrees of freedom allows impacts and resistance to be simulated, which is typically adequate in many virtual reality applications. Force feedback in the fourth, fifth, and sixth degrees of freedom would allow torques on stylus **102** to be simulated as well, which may or may not be useful in a simulation.

FIG. **8** is a perspective view of a second alternate embodiment of the mechanical apparatus **25**'" and user object **44** of the present invention. Mechanical apparatus **25**'" shown in FIG. **8** operates substantially the same as apparatus **25**' shown in FIGS. **3** and **4**. User object **44**, however, is a joystick **112** which the user can preferably move in two degrees of freedom. Joystick **112** can be sensed and force can be applied in both degrees of freedom by a computer system and interface similar to computer system **16** and interface **14** of FIG. **1**. In the described embodiment, joystick **112** is coupled to cylindrical fastener **64** so that the user can move the joystick in the two degrees of freedom provided by gimbal mechanism **38** as described above. Linear axis member **40** is not typically included in the embodiment of FIG. **8**, since a joystick is not usually translated along an axis C. However, in alternate

embodiments, joystick **112** can be coupled to linear axis member **40** similarly to stylus **102** as shown in FIG. **7** to provide a third degree of freedom. In yet other embodiments, linear axis member **40** can rotate about axis C and transducer **70** can be coupled to apparatus **25**''' to provide a fourth degree of freedom. Finally, in other embodiments, a floating gimbal mechanism as shown in FIG. **7**, or a different mechanism, can be added to the joystick to allow a five or six degrees of freedom.

Joystick **112** can be used in virtual reality simulations in which the user can move the joystick to move a vehicle, point to objects, control a mechanism, etc. For example, a user can view a virtual environment generated on a computer screen or in 3D goggles in which joystick **112** controls an aircraft. The computer system tracks the position of the joystick as the user moves it around with sensors and updates the virtual reality display accordingly to make the aircraft move in the indicated direction, etc. The computer system also provides force feedback to the joystick, for example, when the aircraft is banking or accelerating in a turn or in other situations where the user may experience forces on the joystick or find it more difficult to steer the aircraft.

FIG. **9** is a schematic view of a computer **16** and an interface circuit **120** that may be used in interface **14** to send and receive signals from mechanical apparatus **25**. Interface circuit **120** includes computer **16**, interface card **120**, DAC **122**, power amplifier circuit **124**, digital sensors **128**, and sensor interface **130**. Optionally included are analog sensors **132** instead of or in addition to digital sensors **128**, and ADC **134**. In this embodiment, the interface **14** between computer **16** and mechanical apparatus **25** as shown in FIG. **1** can be considered functionally equivalent to the interface circuits enclosed within the dashed line in FIG. **14**. Other types of interfaces **14** can also be used. For example, another type of interface circuit is described below with respect to FIG. **20**.

Interface card **120** can be implemented as a standard card which fits into an interface slot of computer **16**. For example, if computer **16** is an IBM-compatible X86 computer, interface card **14** can be implemented as an ISA or other well-known standard interface card which plugs into the motherboard of the computer and provides input and output ports connected to the main data bus of the computer.

Digital to analog converter (DAC) **122** is coupled to interface card **120** and receives a digital signal from computer **16**. DAC **122** converts the digital signal to analog voltages which are then sent to power amplifier circuit **124**. A DAC circuit suitable for use with the present invention is described with reference to FIG. **10**. Power amplifier circuit **124** receives an analog low-power control voltage from DAC **122** and amplifies the voltage to control actuators **126**. Power amplifier circuit **124** is described in greater detail with reference to FIG. **11** Actuators **126** are preferably DC servo motors incorporated into the transducers **66***a,* **66***b,* and **68**, and any additional actuators, as described with reference to the embodiments shown in FIGS. **3**, **7**, and **8** for providing force feedback to a user manipulating object **44** coupled to mechanical apparatus **25**.

Digital sensors **128** provide signals to computer **16** relating the position of the user object **44** in 3D space. In the preferred embodiments described above, sensors **128** are relative optical encoders, which are electro-optical devices that respond to a shaft's rotation by producing two phase-related signals. In the described embodiment, sensor interface circuit **130**, which is preferably a single chip, receives the signals from digital sensors **128** and converts the two signals from each sensor into another pair of clock signals, which drive a bi-directional binary counter. The output of the binary counter is received by computer **16** as a binary number representing the angular position of the encoded shaft. Such circuits, or equivalent circuits, are well known to those skilled in the art; for example, the Quadrature Chip LS7166 from Hewlett Packard, California performs the functions described above. Each sensor **28** can be provided with its own sensor interface, or one sensor interface may handle data from multiple sensors. For example, the electronic interface described in Pat. No. 5,576,727 describes a sensor interface including a separate processing chip dedicated to each sensor that provides input data.

Analog sensors **132** can be included instead of digital sensors **128** for all or some of the transducers of the present invention. For example, a strain gauge can be connected to measure forces on object **44** rather than positions of the object. Also, velocity sensors and/or accelerometers can be used to directly measure velocities and accelerations on object **44**. Analog sensors **132** can provide an analog signal representative of the position/velocity/acceleration of the user object in a particular degree of freedom. An analog to digital converter (ADC) can convert the analog signal to a digital signal that is received and interpreted by computer **16**, as is well known to those skilled in the art. The resolution of the detected motion of object **44** would be limited by the resolution of the ADC.

FIG. **10** is a schematic view of a DAC circuit **122** of FIG. **9** suitable for converting an input digital signal to an analog voltage that is output to power amplifier circuit **124**. In the described embodiment, circuit **122** includes a parallel DAC **136**, such as the DAC**1220** manufactured by National Semiconductor, which is designed to operate with an external generic op amp **138**. Op amp **138**, for example, outputs a signal from zero to −5 volts proportional to the binary number at its input. Op amp **140** is an inverting summing amplifier that converts the output voltage to a symmetrical bipolar range. Op amp **140** produces an output signal between −2.5 V and +2.5 V by inverting the output of op amp **138** and subtracting 2.5 volts from that output; this output signal is suitable for power amplification in amplification circuit **124**. As an example, R**1**=200 kΩ and R**2**=400 kΩ. Of course, circuit **122** is intended as one example of many possible circuits that can be used to convert a digital signal to a desired analog signal.

FIG. **11** is a schematic view of a power amplifier circuit **124** suitable for use in the interface circuit **14** shown in FIG. **9**. Power amplifier circuit receives a low power control voltage from DAC circuit **122** to control high-power, current-controlled servo motor **126**. The input control voltage controls a transconductance stage composed of amplifier **142** and several resistors. The transconductance stage (commonly referred to as a Howland current pump) produces an output current proportional to the input voltage to drive motor **126** while drawing very little current from the input voltage source. The second amplifier stage, including amplifier **144**, resistors, and a capacitor C, provides additional current capacity by enhancing the voltage swing of the second terminal **147** of motor **146**. As example values for circuit **124**, R=10 kΩ, R**2**=500 Ω, R**3**=9.75 kΩ, and R**4**=1 Ω. Of course, circuit **124** is intended as one example of many possible circuits that can be used to amplify voltages to drive actuators **126**.

FIG. **12** is a perspective view of an alternate embodiment **200** of the mechanical interface apparatus **25** of the present invention. Apparatus **200** includes a gimbal mechanism **202** and an optional linear axis member **204**. User object **44** is

preferably coupled to linear axis member **204**. Alternatively, user object **44** can be coupled directly to the gimbal mechanism **202**.

Gimbal mechanism **202** is similar in some respects to gimbal mechanism **38** as described above with reference to FIG. **2**. Gimbal mechanism **202** can be supported on a grounded surface **206** (schematically shown as part of ground member **208**). Grounded surface **206** can be a tabletop or other fixed, stable surface. The grounded surface can also be fixed relative to only apparatus **200** such that the grounded surface and apparatus **200** can be moved by user as an entire unit.

Gimbal mechanism **202** preferably includes a multi-segment flexure that is rotatably coupled to a ground member **208**. Gimbal mechanism **202** includes a ground member **208**, extension members **210***a* and **210***b*, and central members **212***a* and **212***b*. Ground member **208**, shown schematically, is coupled to grounded surface **206** which provides stability for apparatus **200**. Ground member **208** is shown in FIG. **12** as two separate symbols coupled together through grounded surface **206**, but ground member **208** can be considered to be one "member" that is grounded. An example of a ground member **208** including members **60** and **62** is shown above in FIG. **3**. It should be noted that members **210***a*, **210***b*, **212***a*, and **212***b* are referred to herein as "members" due to the similarity of the rotatably-coupled members described with reference to FIG. **2**. However, these "members" of gimbal **202** can be considered "segments" of a "multi-segment flexure" or a "unitary member," that is rotatably coupled to ground member **208**.

The central members **212***a* and **212***b* are flexible members having a torsion flex (twist) and bending compliance so that the object **44** can be moved in two or three degrees of freedom about axes A, B, and C, as explained below. Axes A and B are fixed in position with respect to the ground surface **206** (i.e., grounded) and are substantially mutually perpendicular. As described above with reference to FIG. **2**, floating axes C, D and E are not fixed in one position as are axes A and B. Floating axes D and E are coincident with axes B and A, respectively, when the user object **44** is in a central position as shown in FIG. **12**. Floating axis C preferably extends approximately through the point of intersection P of axes A and B.

Extension member **210***a* is rotatably coupled to ground member **206** at a first end. In the example of FIG. **12**, a rotary bearing **214***a* is provided between the extension member **210***a* and ground member **206** such that the extension member **210***a* is rotatable about grounded axis A. For example, bearing **214***a* can be part of a transducer **42** as described above, such as an actuator and/or a sensor. Such a transducer, for example, includes a rotatable shaft to which the extension member **210***a* can be rigidly coupled. Extension member **210***a* is a rigid member similar to the extension member **48***a* as shown with respect to FIG. **2**, and can be made of a material such as rigid plastic, metal, or the like. Extension member **210***a* rotates about axis A as shown by arrow **220**.

The second end of extension member **210***a* is rigidly coupled to a first end of central member **212***a*. Central member **212***a* is aligned parallel with a floating axis D and is made of a material such as flexible plastic, rubber, metal, or the like, that provides torsion flex (twist) and bending in a particular desired degree of freedom. Compliance or flex can also be provided with spring members and the like. Herein, the term "flex" is intended to refer to any sort of flexibility in a member or segment. Types of flex described herein include twist (torsion flex) and bending. Twist is the torque twisting motion about a member's lengthwise axis, and bending is the relative movement of the two ends of a member towards or away from each other.

In the described embodiment, central member **212***a* can flex about the floating axis D. As shown in FIG. **12**, central member **212***a* is relatively narrow in the dimension that the central member is to flex, and relatively wide in the dimensions in which the central member is desired to remain rigid. Since the central member **212***a* has a relatively large width in the dimensions of axes C and D, the member will not easily flex in those dimensions. However, the central member **212***a* has a relatively small width in the dimension of a floating axis E, and is thus compliant in that dimension. This allows the central member **212***a* to twist about floating axis D, as shown by arrow **222**, when object **44** is rotated about axis D. This twisting motion substitutes for the rotary motion of central member **50***a* about axis D as allowed by rotary bearing **45***a*, as described above for FIG. **2**. In addition to twisting about axis D, central member **212***a* can bend in the plane of axes D and E. This bending motion substitutes for the rotary motion of the central member **50***a* about axis C as allowed by rotary bearing **47**, as explained with respect to FIG. **2**. Since central member **212***a* can flex, this member is "flexibly coupled" to extension member **210***a*. In other embodiments, central members **212***a* and **212***b* can be provided with other geometries that allow the twisting and bending motions described above.

In the described embodiment, the second end of central member **212***a* is rigidly coupled to object member **216**, which is positioned about at the center point P at the intersection of axes D and E. Object member **216** can support linear axis member **204** or user object **44**. The size and shape of object member **216** can vary widely in different embodiments. Object member **216** preferably includes an aperture through which a linear axis member **204** or user object **44** can translate. In alternate embodiments where object **44** does not translate, object member **216** can be omitted and the second end of central member **212***a* and the first end of central member **212***b* can be directly and rigidly coupled to the user object **44**, which can be placed at about the center point P at the intersection of the axes D and E. For example, in a joystick embodiment having two degrees of freedom, a joystick handle can be coupled directly to central members **212***a* and **212***b* (shown in FIG. **13**).

Central member **212***b* is similar to central member **212***a* and includes a first end that is rigidly coupled to object **216**. Central member **212***b* is preferably aligned with floating axis E and is narrow in the dimension of axis D and wide in the dimensions of axes E and C. This allows the central member **212***b* to twist about floating axis E, as indicated by arrow **224**. Central member **212***b* may also bend in the plane of axes D and E. A first end of extension member **210***b* is rigidly coupled to the second end of central member **212***b*. Extension member **210***b* is rigid similarly to extension member **210***a* and extends in a fashion such that the second end of the extension member **210***b* is positioned on axis B. A rotatable bearing **214***b* is rotatably coupled to the second end of extension member **210***b*, thus allowing extension member **210***b* to rotate about axis B as indicated by arrow **226**. As for bearing **214***a*, bearing **214***b* can be part of a transducer such as a actuator or sensor. Bearing **214***b* is rigidly coupled to ground member **208** to complete the closed loop of members.

Gimbal mechanism **202** is formed as a closed chain or "flexure" of five "members." Each end of one member is coupled to the end of another member. The flexure is

arranged such that extension member **210***a,* central member **212***a,* and central member **212***b* can be rotated about axis A in a first degree of freedom. The linkage is also arranged such that extension member **210***b,* central member **212***b,* and central member **212***a* can be rotated about axis B in a second degree of freedom. In this sense, the gimbal mechanism **202** is similar to mechanism **38** shown in FIG. **2**. When object **44** is moved, the bending ability of the central members **212***a* and **212***b* cause the angle θ between the central members to increase or decrease. For example, in the origin position shown in FIG. **12**, the angle θ is about 90 degrees. If object **44** is moved such that the top of linear axis member **204** moves away from the viewer ("into" the paper) or toward the viewer (out of the paper), then the angle θ between the central members will decrease. Likewise, if the top of linear axis member **204** is moved to the sides as shown in FIG. **12**, then the angle θ will increase.

A major difference of the present embodiment from the embodiment of FIG. **2** is that members **210***a,* **210***b,* **212***a* and **212***b* can be provided as a "unitary member," where these four members are formed and produced coupled together as segments of a single part or "flexure." Gimbal mechanism **202** can thus also be considered a closed loop two member linkage, where one member is a complex unitary member (including these four segments) and the other member is ground member **208** that is rotatably coupled to the unitary member.

Since the members **210***a,* **210***b,* **212***a,* and **212***b* are formed as a unitary part, bearings or joints between these members do not need to be separately manufactured and the extensive assembly process for these members is not necessary. In contrast, the embodiment of FIG. **2** requires joints between equivalent members to these four members to be produced and for these joints and members to be assembled and fastened together. In consequence, the gimbal mechanism **202** is significantly less expensive to produce than the mechanism **25** of FIG. **2**. This allows the mechanical apparatus **200** to be manufactured and provided to the high-volume consumer market while still providing an accurate and realistic force feedback interface to the user. In other embodiments, some of the members **210***a,* **210***b,* **212***a,* and **212***b* can be formed together as unitary members and some members can be formed separately. For example, extension member **210***a* and central member **212***a* can be formed together as segments of one unitary member, while extension member **210***b* and central member **212***b* can be formed together as segments of a second unitary member. Alternatively, central members **212***a* and **212***b* can be formed together as a unitary member (with or without object member **216** formed between them).

Linear axis member **204** is preferably an elongated rod-like member which is translatably coupled to central member **212***a* and central member **212***b* near the point of intersection P of axes D and E, and is similar to linear axis member **40** described with reference to FIG. **2**. Linear axis member **204** can be used as the object **44** or as part of the object **44**, as in shaft **28** of user object **44** as shown in FIG. **1**, or as a joystick handle, pool cue, etc. In other embodiments, linear axis member **204** can be coupled between an object **44** and gimbal mechanism **202**. Linear axis member **204** is coupled to gimbal mechanism **202** such that it extends out of the plane defined by floating axis D and floating axis E. Linear axis member **204** can be rotated about axis E by rotating extension member **210***a,* central member **212***a,* and central member **212***b* in a first revolute degree of freedom, shown as arrow line **230**. Member **204** can also be rotated about axis D by rotating extension member **212***b* and the two central members about axis D in a second revolute degree of freedom, shown by arrow line **232**.

Being translatably coupled to object member **216** (or the ends of central members **210***a* and **210***b*), linear axis member **204** can be linearly and independently translated along floating axis C with respect to the gimbal mechanism **202**, thus providing a third linear degree of freedom as shown by arrows **234**. Axis C can, of course, be rotated about one or both axes A and B as member **204** is rotated about these axes. A transducer can also be coupled to linear axis member **204** for the linear degree of freedom along axis C. The transducer can include an actuator for applying forces in the linear degree of freedom, and/or a sensor for detecting the position of the linear axis member in the linear degree of freedom. Such transducers are described in greater detail in the above embodiments.

In addition, a rotary fourth degree of freedom can be provided to linear axis member **204** (and/or object **44**) by rotating or "spinning" the linear axis member about axis C, as indicated by arrow **236**. This fourth degree of freedom can be provided by spinning linear axis member **204** within a rotatable bearing of object member **216**. Alternatively, a more limited form of spin can be provided by bending the central members to spin the entire object **44** and object member **216**. This is described in greater detail with respect to FIG. **13**. In addition, transducers can be provided to apply forces and/or sense motion in the rotary fourth degree of freedom, as described in previous embodiments.

Also preferably coupled to gimbal mechanism **202** and linear axis member **204** are transducers, such as sensors and actuators. Such transducers are preferably included as part of the bearings **214***a* and **214***b* and provide input to and output from an electrical system, such as computer **16**. Transducers that can be used with the present invention are described above with respect to FIG. **3**. In addition, strain gauges can be used on the flexible members of the present embodiment (and other embodiments having flexible members) to measure the degree of bending and flex of a selected member. For example, the strain gauge can be placed over the length of a central member **212***a* or **212***b* to measure the member's position or the force applied to the member.

User object **44** is coupled to gimbal mechanism **202** either directly or via linear axis member **204**. One possible user object **44** is the grip **26** of a laparoscopic tool **18**, as shown in FIG. **1**, where the shaft **28** of tool **18** can be implemented as part of linear axis member **40**. Other examples of user objects include a joystick, as described below.

FIG. **13** is a top plan view of mechanical apparatus **200** of FIG. **12**. Axes A and B are shown substantially perpendicular to each other. If linear axis member **204** is rotatably coupled to object member **216**, then a fourth degree of freedom about axis C can be provided. However, in other embodiments, linear axis member **204** can be rigidly coupled to object member **216** in the degree of freedom providing the spin about axis C. This spin can still be provided by flexing central members **212***a* and **212***b*. This is shown in FIG. **13**, where the solid line representation of object member **216** and central members **212***a* and **212***b* show these members in a center, neutral position. Dashed line representation **238** shows object member **216** in a rotated position after the object member **216** and linear axis member **204** have been rotated counterclockwise as shown by arrows **240**. Central members **212***a* and **212***b* have flexed to allow this rotation to take place, as shown by the dotted lines. Thus, depending on the particular flexibility of central members **212***a* and **212***b,* the linear axis member **204** and

object **44** can be rotated in a limited amount clockwise or counterclockwise about axis C.

In should be noted that, in some embodiments, the linear axis member **204** can be translatable in a third degree of freedom while being "rigidly" coupled to the object member **216** with respect to the fourth degree of freedom (spin). This would allow the linear axis member to be translated along axis C but would prevent the linear axis member from spinning independently of the object member. Such an embodiment can be implemented, for example, by including one or more grooves within the central aperture of the object member **216** oriented along axis C. The linear axis member could include a corresponding number of catch members that engage the grooves to allow translation but not rotation with respect to the object member **216**.

FIG. **14** is a perspective view of an alternate embodiment **200***b* of the mechanical apparatus **200** shown in FIG. **12**. Apparatus **200***b* includes a gimbal mechanism **202***b* that is similar to gimbal mechanism **202** and includes ground member **208** (shown schematically coupled to ground surface **206**), rigid extension members **210***a* and **210***b*, and flexible central members **212***a* and **212***b*. In the embodiment of FIG. **14**, however, central member **212***a* and central member **212***b* are rigidly coupled to object **44**, which is shown as a joystick **240**. Object **44** thus may not translate along axis C in this embodiment. Object **44**, however, can rotate in a limited angular range about axis C as explained above with reference to FIG. **13**. In addition, the extension members **210***a* and **210***b* of mechanism **202***b* are shown in a slightly different position to those of mechanism **202**. Extension member **210***b* has been "flipped" to be coupled to object **44** via central member **212***b* on the opposite side of the object. Either this configuration or the configuration shown in FIG. **12** may be used without significant functional differences.

Furthermore, an additional transducer **214***c* is shown coupled to one end of the object **44**. Transducer **214***c* is preferably grounded to ground member **208** (or a different member that is coupled to ground). Transducer **214***c* can include an actuator, such as a motor or brake, for imparting forces on object **44** in the rotary degree of freedom about axis C, and/or a sensor for detecting the motion and position of object **44** in the same rotary degree of freedom. These components are described in greater detail in the above embodiments. This embodiment thus can provide three grounded actuators, which provides more accurate force feedback since the actuators are not carrying the weight of any other actuators. Transducer **214***c* is coupled to object **44** by a torsion resistant flexure **242**, which flexes to allow the object **44** to rotate about axes A and B but does not flex about axis C (i.e., resists torsion forces). Flexure **242** may rotate with a shaft of transducer **214***c* and thus allow the object **44** to rotate about axis C. The flexure may relay forces and positions of object **44** about axis C even when the flexure is in a flexed position. Such a flexure can take many possible forms, such as a coil or spring, as are well known to those skilled in the art. The grounded transducer **214***c* and flex coupling **242** can also be coupled to object **44** in other embodiments disclosed herein. In yet other embodiments, torsion resistant flexure **242** can couple object **44** directly to ground member **208** (or ground surface **206**), i.e., transducer **214***c* is omitted. In such an embodiment, object **44** cannot rotate about axis C due to the flexure's resistance to motion in that degree of freedom.

In addition, in other embodiments having a user object **44** translatable along axis C, the torsion resistant flexure **242** can allow such translation. Flexure **242** can be hollow, e.g., the interior space of a coil or spring. A linear axis member **204** or other thin object **44** can be translated through the hollow portion of the flexure **242**.

In yet other embodiments in which object **44** does not translate along axis C, object **44**, such as a joystick handle, can be extended and coupled to ground member **208** or ground surface **206**. For example, a ball joint can be used to provide freedom of motion to object **44** and yet stabilize the object. A sphere, or a portion of a sphere, can be provided on the end of object **44** and fitted to a receiving socket positioned on ground surface **206**, as is well known to those skilled in the art. Such a joint is shown and described with reference to FIGS. **22***a* and **22***b*. The ball joint allows object **44** to be moved about either axis D or E.

FIG. **15** is a perspective view of a third embodiment **200***c* of the mechanical apparatus **200** shown in FIG. **12**. Apparatus **200***c* includes a gimbal mechanism **202***c* that includes ground member **208** (shown schematically coupled to ground surface **206**) and rigid extension members **210***a* and **210***b*, similar to equivalent members shown in FIGS. **12** and **14**. Gimbal mechanism **202***c* also includes three flexible central members **212***a*, **212***b*, and **212***c*. Central members **212***a* and **212***b* are similar to the central members described above with respect to FIGS. **12** and **13**, where the members are both wide in the dimension of axis C and narrow in the respective dimensions in which the members may be twisted, i.e., central member **212***a* has a small width in the dimension of axis A so that the member can be twisted about axis B and bent in the plane of axes D and E. Central members **212***a* and **212***b* couple the object **44** to the extension members **210***a* and **210***b* and allow the object **44** to rotate about axes A and B (and floating axes D and E).

Central member **212***c* is coupled between object member **216** (or object **44**) and extension member **210***a* along axis A and floating axis E. Member **212***c* is flexible like members **212***a* and **212***b*, but has a small width in the dimension of the C axis and a relatively large width in the dimensions of axes A and B. These dimensions allow flexible member **212***c* to twist about axes E and A and bend in the plane of axes A and C. Since flexible member **212***a* also twists about axes A and E, object **44** can be rotated about axes A and E. However, the relatively large width of flexible member **212***c* in the plane defined by axes A and B prevents object member **216** from rotating about axis C. This structure provides more stiffness and stability to object **44** in the object's rotation about axes A and E.

Alternatively, a flexible member **212***d* can be provided instead of flexible member **212***c*. Member **212***d* couples object member **216** and object **44** to extension member **210***a* on the opposite side of object **44** from flexible member **212***b*. Member **212***d* is wide in the dimensions of axes A and B and narrow in the dimension of axis C. Member **212***d* may twist about axes B and D, and bend in the plane of axes B and C, thus providing object **44** a rotary degree of freedom about axes B and D. The larger width of member **212***d* in the A-B plane prevents object member **216** from rotating about axis C. Typically, only member **212***d* or **212***c* is necessary for stability reasons. Both members **212***c* and **212***d* can be provided in alternate embodiments.

Since object member **216** cannot flexibly rotate about axis C in this embodiment, object **44** can be rotatably coupled to object member **216** to allow the object **44** to spin about axis C, if desired. In other embodiments where object **44** is not desired to spin, the object **44** can be directly coupled to flexible members **212***a–c*. In the embodiment of FIG. **15**, object **44** can also be translated along axis C in a linear

degree of freedom, as described above with respect to FIG. **12**. A third grounded transducer **214***c* can also be coupled to object **44** as shown in FIG. **14**.

FIG. **16** is a perspective view of a fourth embodiment **200***d* of the mechanical apparatus **200** shown in FIG. **12**. Apparatus **200***d* includes a gimbal mechanism **202***d* that includes ground member **208** (shown schematically coupled to ground surface **206**) and rigid extension members **210***a* and **210***b*. These members are similar to the equivalent members as described above with respect to FIG. **2**. Gimbal mechanism **202***d* also includes two flexible central members **212***a* and **212***b*. Central members **212***a* and **212***b* are similar to the central members described above with respect to FIGS. **12** and **13**, where the members are both wide in the dimension of axis C and narrow in the respect dimensions in which the members may be rotated. Central members **212***a* and **212***b* couple the object **44** to the extension members **210***a* and **210***b* and allow the object **44** to rotate about axes A and B (and floating axes D and E).

A difference in the embodiment of FIG. **16** is that flexible members **212***a* and **212***b* are rigidly coupled to object **44** (or object member **216**) and are rotatably coupled to extension members **210***a* and **210***b*, respectively, by bearings **213***a* and **213***b*. This allows the flexible members to bend and change the angle θ with respect to each other due to flexure when object **44** is rotated about axes A and B. However, since the flexible members **212***a* and **212***b* are rotatably coupled to the extension members, they will not twist when object **44** is moved, but will rotate. The flexure only comes into effect at the ends of flexible members **212***a* and **212***b* that are coupled to object **44** or object member **216**. This configuration is a compromise between the configurations of FIGS. **2** and **12** and provides more parts and assembly complexity than the embodiment of FIG. **12** due to the extra required bearings **213***a* and **213***b*. However, this embodiment allows the flexible members **212***a* and **212***b* to rotate more easily and thus provides more realistic force feedback to the user.

FIG. **17** is a perspective view of a fifth embodiment **200***e* of the mechanical apparatus **200** shown in FIG. **12**. Apparatus **200***e* includes a gimbal mechanism **202***e* which includes a ground member **208**, extension members **210***a* and **210***b*, and flexible central members **212***a* and **212***b* coupled together similarly to the above embodiments. In most respects, apparatus **200***e* functions similarly to apparatus **200** of FIG. **12**. Flexible members **212***a* and **212***b* are rigidly coupled to extension members **210***a* and **210***b*, respectively, as in the embodiment of FIG. **12**. However, the flexible members are rotatably coupled to object **44** via bearing **215**. Bearing **215** provides a rotatable connection between central members **212***a* and **212***b* and to object **44** (or linear axis member **204**), thus allowing the object or linear axis member to rotate or spin about axis C. When the object **44** is rotated about axes A and B (and D and E), the angle θ between the central members changes due to rotation of bearing **215** instead of due to the bending of the members. The flexible members **212***a* and **212***b* twist due to being rigidly coupled to bearing **215** and extension members **210***a* and **210***b*. This configuration, like the configuration of FIG. **16**, is a compromise between the embodiments of FIGS. **2** and **12** which is more costly than the embodiment of FIG. **12**, but also provides more realistic forces to the user.

FIG. **18** is a perspective view of mechanical apparatus **25** (or **200**) in which a voice coil actuator **240** acts as an actuator **126** to apply forces to object **44** in a degree of freedom. Voice coil actuators have been used in the prior art in a single degree of freedom for disk drives and similar rotating devices. Voice coil actuator **240** includes a pendulum shaft **242**, a pendulum head **244**, a magnetic assembly **246**, and a magnetic flux guide **247**. Pendulum shaft **242** is rigidly coupled to extension member **48***a* such that when extension member **48***a* rotates about axis B, pendulum shaft **242** also rotates about axis B. Pendulum head **244** is coupled to shaft **242** and rotates with the shaft. Pendulum head **244** is positioned between two magnets **248** of magnet guide **246**. Preferably, pendulum head extends out from and is exposed partially on both sides of the magnet assembly **246**.

As shown in the side sectional view of FIG. **19***a* and the top sectional view of FIG. **19***b*, pendulum head **244** is positioned between magnets **248***a* and **248***b* and is thus affected by the magnetic fields of both magnets. Magnets **248***a* and **248***b* each include north polarity surfaces **250** and south polarity surfaces **252**, thus providing four magnetic polarities to the interior region **255** of the guide **47** (opposite polarities are provided on opposing surfaces of magnets **248**). In alternate embodiments, four different magnets can be provided (two north polarity magnets, and two south polarity magnets.) In yet another embodiment, one magnet **248***a* or **248***b* can be provided, and the other magnet can be a similarly-shaped piece of metal that provides a flux return path. Preferably, a small amount of space **249** is provided between the magnet surfaces and the pendulum head **244**. Magnetic flux guide **247** is a housing that allows magnetic flux to travel from one end of the magnets **248** to the other end, as is well known to those skilled in the art.

Pendulum head **244** includes a coil of wire **256** which is preferably wound around the perimeter of the pendulum head. An electric current I is flowed through the coil **256** via electrical connections **257**. As is well known to those skilled in the art, the electric current in the coil generates a magnetic field. The magnetic field from the coil then interacts with the magnetic fields generated by magnets **248** to produce a motion. The motion or torque of the pendulum head **244** is indicated by arrows **258**. The magnitude or strength of the torque is dependent on the magnitude of the current that is applied to the coil. Likewise, the direction of the torque depends on the direction of the current to the coil. The operation and implementation of such pendulum movement from magnetic fields is well known to those skilled in the art.

Thus, by applied a desired current magnitude and direction, force can be applied to pendulum head **244**, thereby applying force to pendulum shaft **242** and torque to extension member **48***a*. This in turn applies a force to object **44** in the rotary degree of freedom about axis B (and axis D). The voice coil actuator thus may be provided as a substitute for other actuators such as DC motors and brakes having rotatable shafts. A voice coil actuator can be provided for each degree of freedom of mechanical apparatus to which force is desired to be applied. For example, a second voice coil **240** is preferably coupled to extension member **48***a* in a similar manner to apply forces to object **44** in the rotary degree of freedom about axes A and E. In addition, the other embodiments of mechanical apparatus **25** as shown in FIGS. **12–17** can use the voice coil actuator **240** as an actuator. Also, other known mechanical interface devices, such as slotted yoke mechanisms or other gimbal mechanisms, can use voice coils to provide force feedback to a user of the interface in desired degrees of freedom.

In addition, the voice coil actuator **240** can be used as a sensor. A second coil, having an appropriate number of loops, can be placed on pendulum head **244**. Motion about axis B within magnetic field induces a voltage across the second coil. The voltage can be sensed across this second coil. This voltage is proportional to the rotational velocity of the pendulum head **244**. From this derived velocity, accel-

eration or position of the pendulum head can be derived using timing information, for example, from a clock (described below). Alternatively, the coil **256** can be used for both applying forces and sensing velocity, as is well known to those skilled in the art.

The voice coil actuator **240** has several advantages. One is that a limited angular range is defined for a particular degree of freedom of object **44** by the length of the magnetic assembly **246**. In many interface devices, such as joysticks, such a limited angular range is desired to limit the movement of object **44**. Also, the voice coil actuator provides good mechanical advantage due to the larger radius of the magnetic assembly **246**. Thus, when using voice coil actuators for transducers **42**, a capstan drive as described above with respect to FIG. **5**, or friction drive as described below, are not necessary. Also, control of the voice coil actuator is simpler than other actuators since output torque is a linear function of input coil current. In addition, since voice coil actuators do not require mechanical or electrical commutation as do other types of motors, the voice coil actuator has a longer life expectancy, less maintenance, and quiet operation. The actuation is frictionless, resulting in greater haptic fidelity. Finally, the parts for voice coil actuators are inexpensive to produce and are readily available, resulting in a low cost way to provide realistic force feedback.

Alternatively, a linear voice coil can be used to provide forces in and detect motion in a linear degree of freedom. A linear voice coil has magnets similar to magnets **248** described above, except that they form a linear channel through which a coil head (similar to pendulum head **244**) translates. Such a linear voice coil is described with reference to FIGS. **21***a–b* and **22***a–e* and can be used, for example, with the translating motion of linear axis member **40** or **204** and/or object **44** along axis C.

FIGS. **20***a*–**20***e* are schematic views of an alternate embodiment **240'** of a voice coil actuator for use in the present invention. Pendulum head **244'** is an alteration of the pendulum head **244** of FIGS. **19***a* and **19***b*. Coil **260** is positioned around the perimeter of pendulum head **244'** and includes multiple separate "sub-coils" of wire. Terminals **261** include a set of terminals for each different sub-coil in pendulum head **244'**. These different sub-coils are shown in FIGS. **20***b*–**20***e*.

FIG. **20***b* shows one sub-coil **262** that forms one loop around the perimeter of head **244'**. FIG. **20***c* shows a sub-coil **264** that forms two loops, and FIG. **20***d* shows a sub-coil **266** that forms four loops. Finally, FIG. **20***e* shows a sub-coil **268** that forms eight loops of wire. All of these sub-coils can be provided on pendulum **244'** as coil **260**. Each sub-coil shown in FIGS. **20***b*–**20***e* includes its own set of terminals **261** to be connected to a source of current I.

Using, for example, the four different sub-coils shown in FIGS. **20***b*–**20***e*, different magnetic fields can be induced for the pendulum head **244'** and thus different torques can be applied to the pendulum. A fixed current can be selectively provided to each sub-coil using one or more switches connected to the sub-coils. Since the magnetic fields from selected sub-coils will interact to create larger or smaller magnetic fields, a variety of different torques can be provided. There are four different sub-coils, where each sub-coil produces a torque that is a factor of **2** greater than the previous coil. Thus, a total of 2^4=16 different torques can be produced with a constant-magnitude current in each sub-coil. Since the direction of the current can be switched to create torques in the opposite direction, the total number of torques that can be produced is equal to **31**. In other embodiments, a different number of sub-coils can be used. Reduced to a general rule, a voice coil actuator having N sub-coils, each of which can be driven in one of three states (positive polarity, 0, negative polarity) can produce $2^{N+1}-1$ torque values.

This scheme is readily applicable to a digital system using on and off switches. For example, each sub-coil can be provided with a set of four switches (commonly referred to as an "H-bridge") to select the direction of the current in the sub-coil. An advantage of this alternate embodiment is that the current magnitudes need not be varied, allowing for less complex electronics and a scheme easily adaptable to digital signals.

In other embodiments, additional sets of coils can be provided to create additional torque values. For example, another set of four sub-coils, identical to the set described above, can be added to coil **260** and oriented so that the second set of sub-coils creates torques in the opposite direction to the first set. With additional coils, the number of switches can be reduced. In yet other embodiments, the coils can be provided as traces on a printed circuit board for easy manufacture.

FIG. **21***a* is a perspective view of an interface system **270** in which two linear degrees of freedom are provided to user object **44** and linear voice coil actuators **272***a* and **272***b* are used to apply forces to the user object. Computer **16** (not shown) is preferably coupled to the voice coil actuators to apply current as desired.

A side sectional view of an example of a linear voice coil actuator **272***a* is shown in FIG. **21***b*. Linear voice coil actuator **272***a* is a grounded actuator and include a cylindrical magnetic flux housing **274***a* and a coil head **276***a*. Housing **274***a* can be made of iron or other ferrous metal and includes a radially polarized, tubular magnet **275***a* (which, alternatively, can be made up of multiple, smaller magnets) positioned along the inside length of the housing and which are radially magnetized. In addition, a core portion **277***a* of housing **274***a* preferably extends down the center of housing **274***a* through the center of coil head **276***a*. Coil head **276***a* includes a coil **278***a* which is wrapped around the coil head, similar to the coil **256** of FIG. **19***a*. An optional coil support **281***a* can be provided around which to wrap coil **278***a*. The coil head **276***a* moves within the housing **274***a* along a linear degree of freedom, indicated by arrows **279**, when a current is flowed through coil **278***a*, similarly as described above. The direction of the coil head **276***a* depends on the direction of the applied current. In addition, the linear voice coil actuator can be used to sense the position of coil head **276***a* along the linear degree of freedom by sensing velocity as described above with reference to FIG. **19***a* and **19***b*. Alternately, separate linear motion sensors can be coupled to the object **44** or other members; such linear sensors are well known to those skilled in the art. In other embodiments, the coil head **276***a* can be made longer than the housing **274***a*. Linear voice coil actuators are well known to those skilled in the art and are described in *Precision Machine Design*, by Alexander Slocum, Prentice Hall, 1992, page 64.

Referring back to FIG. **21***a*, coil head **276***a* is preferably coupled to a first end of a shaft **282***a*, and a second end of shaft **282***a* is coupled to a first end of a joint member **284***a*. A rotary joint **283***a* couples shaft **282***a* to joint member **284***a* and allows joint member **284***a* to rotate about floating axis Z_1. A second end of joint member **284***a* is rotatably coupled to a second end of joint member **284***b* by a rotary joint **286**. User object **44** is preferably coupled to joint member **284***b* (or, alternatively, **284***a*). Linear voice coil actuator **272***b* has

equivalent components to actuator **272***a* as shown in FIG. **21***b*. Joint member **284***b* can thus rotate about floating axis Z_2. The second end of joint member **284***b* is rotatably coupled to the second end of joint member **284***a* by rotary joint **286**, which provides an axis of rotation Z_3.

Object **44** can be translated by a user along linear axis X or linear axis Y, or along a combination of these axes. When object **44** is moved along axis X toward or away from housing **274***a,* then coil head **276***a,* shaft **282***a,* and joint member **284***a* are correspondingly moved toward or away from housing **274***a* and retain the same relative position as shown in FIG. **21***a*. However, joint member **284***b* rotates about floating axis Z_2 and floating axis Z_3 in accordance with the movement of joint member **284***a*. Likewise, when object **44** is moved along axis Y toward or away from housing **272***b,* then coil head **276***b,* shaft **282***b,* and joint member **284***b* are correspondingly moved toward or away from housing **272***b* and retain the relative positions as shown in FIG. **21***a*. Joint member **284***a* rotates about floating axes Z_1 and Z_3 in accordance with the movement of joint member **284***b*. When object **44** is moved simultaneously along both axes X and Y (e.g., object **44** is moved diagonally), then both joint members **284***a* and **284***b* rotate about their respective axes and axis Z_3.

Shafts **282***a* and **282***b* and joint members **284***a* and **284***b* can be rectilinear members that may be rotatably coupled to each other at flat surfaces of the members with rotary couplings or hinges **283***a,* **283***b,* and **286**. In the described embodiment, one joint member **284***a* is coupled under shaft **282***a* and the other joint member **284***b* is coupled over shaft **282***b*. Alternatively, the shafts and joint members can be coupled together in many different configurations.

FIG. **21***c* is a schematic diagram of an alternate embodiment **270'** of the interface system **270** shown in FIG. **21***a*. In FIG. **21***c,* two linear voice coil actuators **272***a* and **272***b* as shown in FIG. **21***a* are included to apply forces and sense positions in two linear degrees of freedom to object **44**. Voice coil actuator **272***a* includes housing **274***a,* coil head **276***a,* and shaft **282***a,* and actuator **272***b* includes equivalent components. Computer **16** (not shown) is preferably coupled to the voice coil actuators to apply current as desired.

As in FIG. **21***a,* coil heads **276***a* and **276***b* translate along linear degrees of freedom, indicated by arrows **279**, within housings **274***a* and **274***b,* respectively. Current can be applied by computer **16** to apply force to the coil heads or sense velocity.

Shaft **282***a* is coupled to a flexible member **288***a*. Flexible members **288***a* and **288***b* are preferably made of a resilient material such as flexible plastic, rubber, metal, or the like and can flex similarly to the flexible members described above with respect to FIG. **12**. As described above, flexible members **288***a* and **288***b* are preferably narrow in the dimension that the rod is to bend, and wide in the dimensions in which the rod is to remain rigid. Shaft **282***a* is a rigid member that couples member **288***a* to coil head **276***a,* and can be provided with different lengths in different embodiments. Flexible member **288***a* is rigidly coupled to an object member **289** at the other end of the flexible member. Member **289** can be a part of object **44** or a platform or other base for supporting object **44**. Shaft **282***b* is coupled to object **44** through flexible member **288***b* in a similar manner. Flexible member **288***b* is coupled to object member **289** at its other end.

Object **44** can be moved by a user along linear axis X or linear axis Y. Flexible members **288***a* and **288***b* flex (bend) appropriately as the object is moved. For example, if object **44** and member **289** are moved along axis X, flexible member **288***a* does not bend since the direction of movement is directed down (substantially parallel to) the longitudinal axis of flexible member **288***a*. However, since housing **274***b* is grounded and fixed in place relative to object **44**, flexible member **288***a* bends toward or away from actuator **272***a* (depending on the object's direction along axis X) to allow the translation of object **44**. This occurs when the direction of movement of object **44** is substantially perpendicular to the longitudinal axis of flexible member **288***a*. Likewise, when object **44** is translated along axis Y in the other linear degree of freedom, flexible member **288***b* does not flex since the direction of movement is directed substantially parallel to the longitudinal axis of flexible member **288***b*. Flexible member **288***a,* however, bends toward or away from actuator **272***b* to allow the translation of object **44**. When object **44** is moved simultaneously along both axes X and Y (e.g., object **44** is moved diagonally), then both flexible members **288***a* and **288***b* flex in conjunction with the movement. It should be noted that the flexible members **288***a* and **288***b* do not need to twist (i.e. provide torsion flex) like the flexible members of FIG. **12**. Only a bending motion is required of members **288***a* and **288***b* in the embodiment of FIG. **21***c*.

FIG. **22***a* is a top plan view and FIG. **22***b* is a side elevational view of an interface apparatus **300** including voice coil actuators similar to those described above with reference to FIGS. **18**, **19***a,* and **19***b*. Interface apparatus **300** includes user object **44**, a ball joint **302**, a socket **304**, a drive pin **306**, a circuit board **308**, and voice coil actuators **310***a* and **310***b*. User object **44** is shown as a joystick that is coupled to ball joint **302**. User object **44** has two rotary degrees of freedom about axis X and axis Y, respectively, as indicated by arrows **312** and **314**. These degrees of freedom result from ball joint **302** rotating within socket **304**. Socket **304** is grounded and remains stationary relative to user object **44**, ball joint **302**, and the other moving components of apparatus **300**. Ball socket **302** is shown as a partial sphere with a portion of the sphere cut off. Other similar types of joints can be used in other embodiments.

Drive pin **306** is coupled to ball joint **302** and extends along an axis Z out of the plane defined by axes X and Y. Drive pin **306** extends through an aperture **316** in a circuit board **308**. Preferably, a grommet **322** made of rubber or a similar compliant material is positioned between the drive pin **306** and the circuit board **308**. Alternatively, open space can be provided between the pin and the board. Circuit board **308** is positioned in a plane substantially parallel to the X–Y plane and floats, i.e., circuit board **308** is not grounded. Board **308** is preferably guided by guides **318**, which serve to keep circuit board **308** substantially within the plane parallel to the X–Y plane and allow the circuit board to translate in that plane, as shown by arrows **320**. Guides **318** are shown as round, cylindrical members, but have a variety of shapes in alternate embodiments. In this embodiment, circuit board **308** translates in linear degrees of freedom, while user object **44** rotates in rotary degrees of freedom.

Circuit board **308** is provided in a substantially right-angle orientation having one extended portion **324** at 90 degrees from the other extended portion **324***b*. In alternate embodiments, circuit board **308** can be provided as other shapes. Voice coil actuators **310***a* and **310***b* are positioned on circuit board **368** such that one actuator **310***a* is provided on portion **324***a* and the other actuator is provided on portion **324***b*. Wire coil **326***a* of actuator **310***a* is coupled to portion **324***a* of circuit board **308**. Preferably, wire coil **324***a* includes at least two loops and is etched onto board **308** as

a printed circuit board trace using well-known techniques. Terminals **328***a* are coupled to actuator drivers of actuator interface **414**, as described below, so that computer **16** (or microprocessor **410**) can control the direction and/or magnitude of the current in wire coil **326***a*. In alternate embodiments, additional coils can be provided on portion **324***a* for sensing velocity and/or implementing the alternate embodiment of FIGS. **20***a*–**20***e*.

Voice coil actuator **310***a* also includes a magnet assembly **330***a*, which preferably includes four magnets **332** and is grounded. Alternatively, two magnets with two polarities each can be included. Each magnet has a north polarity N and a south polarity S on opposing sides of the magnet. Opposite polarities of magnets **332** face each other such that coil **326***a* is positioned between opposing polarities on either side of the coil. The magnetic fields from magnets **332** interact with the magnetic field produced from wire coil **326***a* when current is flowed in coil **326***a* similarly as described above with reference to FIGS. **19***a* and **19***b* to produce a linear force to circuit board **308** in a direction parallel to axis Y, as shown by arrow **320***a*. The circuit board **308** and wire coil **326***a* are moved parallel to axis Y until coil **326***a* is moved out from under the magnet **332** on the side where the coil was moved. For example, circuit board **308** can be moved to the limits shown by dotted lines **334**. Alternatively, physical stops can be positioned at the edges of the board **308** to provide this movement limit. When circuit board **308** translates along axis Y due to forces generated by voice coil actuator **310***a*, drive pin **306** is also moved through contact with board **308** (and grommet **322**). This, in turn, rotates ball joint **302** within socket **304** and moves user object **44** so that the user feels the forces in the rotary degree of freedom about axis X, as shown by arrows **312**. The movement of user object **44** can be limited by stops positioned outside the edge of circuit board **308** and/or by stops placed on ball joint **302** to limit the movement of object **44**.

Voice coil actuator **310***a* can also be used, as described in above embodiments, to sense the velocity of circuit board **308** along axis Y as the user moves user object **44** about axis X and to derive position and other values from that velocity. However, since the voice coil actuators produce analog sensor values, subject to noise, and the filtering of such noise typically requires expensive components, it is preferred that separate digital sensors be used to sense the position, motion, etc. of object **44** for low cost interface devices. For example, a lateral effect photo diode sensor **338** can be used. Sensor **338** can include a rectangular detector **340** positioned in a plane parallel to the X–Y plane onto which a beam of energy **342** is emitted from a grounded emitter **344**. The position of the circuit board **308**, and thus the position of object **44**, can be determined by the location of the beam **342** on the detector. Alternatively, other types of sensors can be used, such as an optical encoder having a rotating shaft coupled to a roller that is frictionally engaged with circuit board **308**.

Voice coil actuator **310***b* operates similarly to actuator **310***a*. A current is flowed through coil **326***b* to induce magnetic forces that translate circuit board **308** in a direction parallel to axis X, as shown by arrow **320***b*. This moves drive pin **306** and causes forces to be applied to user object **44** in the rotary degree of freedom about axis Y, as shown by arrows **314**. A separate sensor can also be provided for the motion of object **44** about axis Y, or a single sensor **338** can be used to detect motion in both degrees of freedom.

Optionally, an anti-rotation flexure **336** can be coupled between a grounded surface and circuit board **308**. This flexure **336** preferably prevents board **308** from rotating about axis Z in the plane parallel to the X–Y plane. In addition, flexure **336** can provide a restoring force through circuit board **308** to object **44** to bring the object back to a center position as shown in FIG. **22***b* when no other forces are being applied to the object. Flexure **336** can be a helical spring-like member (as shown), an Oldham style shaft coupling (allowing slotted movement), or a flexure assembly similar to the one shown in FIG. **22***c*. The flexure can take other forms in other embodiments.

The embodiment of FIGS. **22***a* and **22***b* has several advantages. One is that the coils **326***a* and **326***b* can be etched directly onto circuit board **308**, thus avoiding assembly time in wrapping a separate wire. In addition, the preferred voice coil driver chips (described with reference to FIG. **24**), as well as other electronic components of interface **14** or **14'**, can be coupled directly to circuit board **308** and interconnected with traces on board **308**. This provides a simple and low cost method to manufacture and provide the electronic components of the interface apparatus.

FIG. **22***c* is a top plan view of an alternate embodiment of the interface apparatus **300** shown in FIG. **22***a*, in which a different anti-rotation flexure **336'** is used instead of the helical flexure **336** shown in FIG. **22***b*. Anti-rotation flexure **336'** includes flexible members **354** oriented in the direction of axis X, flexible members **356** oriented in the direction of axis Y, and a rigid L-shaped member **358**. Members **354** are coupled to circuit board **308** on one end and to L-shaped member **358** on the other end. Members **356** are coupled to L-shaped member **358** on one end and to ground on the other end. Members **354** and **356** can be narrow in one dimension and relatively wide in the other dimensions, similar to flexible members **212***a* and **212***b* shown in FIG. **12**, so that the members can bend within the X–Y plane.

The flexure **336'** allows the circuit board **308** to move along the axes X and Y, but prevents the circuit board **308** from rotating within the X–Y plane. Flexure **336'** is more complex to implement than the helical flexure **336**, but provides less resistance to the circuit board's motion along the X and Y axes and thus allows more accurate force feedback.

FIGS. **22***d* and **22***e* show an alternate embodiment **300'** of the interface apparatus **300** shown in FIGS. **22***a* and **22***b*. Interface apparatus **300'** provides two linear degrees of freedom to object **44** so that the user can translate object **44** along the X axis, along the Y axis, or along both axes (diagonal movement). Apparatus **300'** includes a circuit board **308** that includes voice coil actuators **310***a* and **310***b* and guides **318**. These components operate substantially similar to the equivalent components in apparatus **300**.

A main difference between the embodiments of FIGS. **22***a*–*b* and FIGS. **22***d*–*e* is that object **44** is rigidly coupled to circuit board **308**. Thus, when circuit board **308** is translated along axis X and/or axis Y, shown by arrows **320***a* and **320***b*, object **44** is translated in the same directions, as shown by arrows **350** and **352**, respectively, providing the object with linear degrees of freedom. Thus, both user object **44** and circuit board **308** move in linear degrees of freedom. This is unlike the apparatus **300**, in which the linear motion of circuit board **308** was converted into rotary degrees of freedom for object **44** by ball joint **302**.

FIG. **23***a* is a front elevational view of an embodiment for a friction drive **360** that can be used, for example, in place of capstan drive mechanism **58** of the present invention. Drum **162** is similar to capstan drum **59** and can be coupled to mechanical apparatus **25** or **200** similarly as described

above. For example, drum **362** can be rigidly coupled to extension member **48***a* or **48***b* and can rotate about axis A or axis B, respectively. Axis A is shown in FIG. **23***a* as an example.

Leg portions **364** of drum **362** are provided in a similar configuration as capstan drum **59**. A drive bar **366** is coupled between the leg portions **364**. Drive bar **366** is a curved, preferably round, rigid wire that has an interior frictional surface **370** and an exterior frictional surface **372**. Alternatively, drive bar can be a flat or square-cross sectional member and/or can be either rigid or flexible. A drive roller **374** is frictionally engaged with the external frictional surface **372** and is rotatably coupled to a ground member. For example, drive roller **374** can be coupled to ground member **62** of apparatus **25** similarly to pully **76** as shown in FIG. **5**. Drive roller **374** is preferably coupled to a shaft of a transducer **42**, similarly to pulley **76** of FIG. **5**. Preferably, transducer **42** includes an actuator that rotates driver roller **374**.

A passive roller **376** is frictionally engaged with the interior frictional surface **370** of drive bar **366** opposite to drive roller **374** and extends substantially parallel to the drive roller. Passive roller **376** is preferably spring loaded such that the passive roller is forced towards driver roller **374**. This force is indicated by spring **378**. For example, spring members can couple the passive roller to driver roller **374**. A clamping force is thus created between the passive roller **376** and the drive roller **374**, which creates a high compressive force between the drive bar **366** and the drive roller **374**. This force enables the drive roller to impart a tangential driving force to the drive bar **366** and thus move the drive bar, in turn rotating drum **362** about axis A. Using the friction drive **360**, an actuator in transducer **42** can impart rotary forces to drum **362** and, for example, extension member **48***a* or **48***b*. In addition, a sensor in transducer **42** can sense the position of an extension member **48***a* or **48***b* by reading the position of drum **60**. The motion of drum **60** is transmitted to drive roller **374** through the compressive force, and is read by the sensor as the drive roller rotates.

In alternate embodiments, passive roller **376** can be rotatably coupled to ground member **62** and thus fixed in position. In addition, the spring members can be placed between a moveable or compliant passive roller and ground and between a moveable/compliant drive roller **374** and ground in an alternate embodiment. This would allow the passive roller and the drive roller to both be pulled against the drive bar **366**.

The friction drive **360** has several advantages. A mechanical advantage is provided between an actuator and the rotation of object **44**, as explained above for capstan drive mechanism **58**. In addition, as explained above for the capstan drive, substantially no backlash is created with the friction drive and the friction drive operates very smoothly to provide realistic forces to the user. However, no cable or wire is required in the present drive mechanism, thus providing a simpler and easier to assemble drive mechanism than the capstan drive. The friction drive is also inexpensive, since the parts of the drive are simple to manufacture. Also, high speed-reduction ratios between the actuator coupled to drive roller **374** and the motion of drum **362** about axis A are possible when, for example, a small drive roller **374** drives a drive bar **366** having a large operating radius.

FIG. **23***b* is a detailed view (defined by dotted line **368** of FIG. **23***a*) of a different embodiment of the rollers and drive bar of the friction drive **360**. In this embodiment, two passive rollers **376***a* and **376***b* are provided to be frictionally engaged with the interior surface **370** of drive bar **366**. Each passive roller **376***a* and **376***b* is spring loaded to drive roller **374** by spring members **378***a* and **378***b*, respectively. The two passive rollers **376***a* and **376***b* provide a greater clamping force and compressive force between the drive and passive rollers, thus preventing more slip of drive bar **366** than the embodiment of FIG. **23***a*.

FIG. **23***c* is a detailed view of a third embodiment of the rollers and drive bar of the friction drive **360**. Drive bar **366** is preferably round or square wire that is flexible in at least one direction. Two passive rollers **376***a* and **376***b* can be coupled together and to drive roller **374** by non-tensile connections **380**. The flexibility in drive bar **366** allows the drive bar to bend around the rollers and creates a higher friction, thus preventing slippage of the drive bar.

FIG. **23***d* is a detailed view of a fourth embodiment of the rollers and driver bar which is similar to the embodiment shown in FIG. **23***b* except that one of the passive rollers **376***a* and **376***b* is not spring loaded. Preferably, passive roller **376***a* (or **376***b*) is coupled to drive roller **374** by a rotatable plate **382** or other rigid member, which acts as the non-compliant connection **380**. Since the spring **378** forces the drive roller **374** toward drive bar **366**, the plate **382** rotates as shown by arrows **384**. This forces the passive roller **376***a* against drive bar **366** and thus increases the compression force between the rollers and the drive bar **366**.

FIG. **23***e* is an alternate embodiment of the friction drive **360** in which the rollers **376***a*, **376***b*, and **374** are provided in a different orientation. The rollers are positioned 90 degrees offset from their position in the embodiment of FIG. **23***a*. The function of the rollers is substantially the same as described above.

FIG. **23***f* is an alternative embodiment showing a linear friction drive **360'**. Friction drive **360'** includes a sliding member **388** which is supported by guides **390**. Guides **390** are preferably grounded so that sliding member **388** can translate between the guides, as shown by arrows **386**. A drive bar **366** is coupled between two leg portions **392** of the sliding member **388**. Drive bar **366** can be a wire or member as described above with respect to FIG. **23***a*.

Passive roller **376** and drive roller **374** are frictionally engaged with drive bar **366**. As described above, drive roller **374** is rotated by an actuator and causes a tangential force on drive bar **366**. This causes sliding member **388** to translate in either direction **386**. A spring **378** can be coupled between the passive and drive rollers as described above. Alternatively, the other embodiments of rollers **374** and **376** as described with reference to FIGS. **23***b*–**23***e* can also be used with linear friction drive **360'**. Linear friction drive **360'** can be used to provide forces in a linear degree of freedom. For example, linear forces can be applied to linear axis member **40** or **204** (or object **44**, if appropriate) using drive **360'**. The linear axis member can be coupled to sliding member **388** and thus translate when member **388** translates.

FIG. **24** is a block diagram showing another embodiment of an electronic interface **14'** and host computer **16** suitable for use with the present invention. This embodiment includes a local microprocessor which can perform much of the signal processing necessary to control the sensors and actuators of the mechanical apparatus **25**. User object **44** may be grasped or otherwise contacted or controlled by a user and is coupled to mechanical apparatus **25**, as described above.

Host computer **16** preferably includes a host microprocessor **400**, a clock **402**, and display screen **20**. Host microprocessor **400** can include a variety of available micro-

processors from Intel, Motorola, or other manufacturers. Microprocessor **400** can be single microprocessor chip, or can include multiple primary and/or co-processors. In addition, host computer **16** preferably includes standard components such as random access memory (RAM), read-only memory (ROM), and input/output (I/O) electronics (not shown). In the described embodiment, host computer system **16** can receive sensor data or a sensor signal via interface **404** from sensors of mechanical apparatus **25** and other information. Host computer **16** can also output a "force command" to mechanical apparatus **25** via interface **404** to cause force feedback for the interface device.

Clock **402** is a standard clock crystal or equivalent component used by host computer **16** to provide timing to electrical signals used by microprocessor **400** and other components of the computer. Clock **402** can be accessed by host computer **16** in the control process of the present invention, as described subsequently.

Display screen **20** is described with reference to FIG. **1**. Audio output device **406**, such as speakers, is preferably coupled to host microprocessor **400** via amplifiers, filters, and other circuitry well known to those skilled in the art. Host processor outputs signals to speakers **406** to provide sound output to the user when a "audio event" occurs during the implementation of the host application program. Other types of peripherals can also be coupled to host processor **400**, such as storage devices (hard disk drive, CD ROM drive, floppy disk drive, etc.), printers, and other input and output devices.

Electronic interface **14'** is coupled to host computer **16** by a bi-directional bus **404**. The bi-directional bus sends signals in either direction between host computer **16** and interface **14'**. Herein, the term "bus" is intended to generically refer to an interface such as between host computer **16** and microprocessor **410** which typically includes one or more connecting wires or other connections and that can be implemented in a variety of ways, as described below. In the preferred embodiment, bus **404** is a serial interface bus providing data according to a serial communication protocol. An interface port of host computer **16**, such as an RS232 serial interface port, connects bus **404** to host computer **16**. Other standard serial communication protocols can also be used in the serial interface and bus **404**, such as RS-422, Universal Serial Bus (USB), MIDI, IrDA, or other protocols well known to those skilled in the art. For example, USB provides a relatively high speed serial interface that can provide force feedback signals in the present invention with a high degree of realism.

An advantage of the present embodiment **14'** is that low-bandwidth serial communication signals can be used to interface with mechanical apparatus **25**, thus allowing a standard built-in serial interface of many computers to be used directly. Alternatively, a parallel port of host computer **16** can be coupled to a parallel bus **404** and communicate with interface device using a parallel protocol, such as SCSI or PC Parallel Printer Bus. In a different embodiment, as described with reference to FIG. **9**, bus **404** can be connected directly to a data bus of host computer **16** using, for example, a plug-in card and slot or other access of computer **16**. For example, on an IBM AT compatible computer, the interface card can be implemented as an ISA, EISA, VESA local bus, PCI, or other well-known standard interface card which plugs into the motherboard of the computer and provides input and output ports connected to the main data bus of the computer. In addition, the embodiment of FIG. **9** can be used with the local microprocessor of the present embodiment.

In yet another embodiment, an additional bus **405** can be included to communicate between host computer **16** and electronic interface **14'**. Since the speed requirement for communication signals is relatively high for outputting force feedback signals, the single serial interface used with bus **404** may not provide signals to and from the interface device at a high enough rate to achieve realistic force feedback. In such an embodiment, bus **404** can be coupled to the standard serial port of host computer **16**, while additional bus **405** can be coupled to a second port of the host computer. For example, many computer systems include a "game port" in addition to a serial RS-232 port to connect a joystick or similar game controller to the computer. The two buses **404** and **405** can be used simultaneously to provide an increased data bandwidth. For example, microprocessor **410** can send sensor signals to host computer **16** via a uni-directional bus **405** and a game port, while host computer **16** can output force feedback signals from a serial port to microprocessor **410** via uni-directional bus **404**. Other combinations of data flow configurations can be implemented in other embodiments.

Electronic interface **14'** includes a local microprocessor **410**, sensors **128**, actuators **126**, optional sensor interface **130**, an optional actuator interface **412**, and other optional input devices **414**. Interface **14'** may also include additional electronic components for communicating via standard protocols on bus **404**. In the preferred embodiment, multiple mechanical apparatuses **25** and interfaces **14'** can be coupled to a single host computer **16** through bus **404** (or multiple buses **404**) so that multiple users can simultaneously interface with the host application program (in a multi-player game or simulation, for example). In addition, multiple players can interact in the host application program with multiple mechanical apparatuses **25**/interfaces **14'** using networked host computers **16**, as is well known to those skilled in the art.

Local microprocessor **410** is coupled to bus **404** and is preferably included within the housing of interface **14'** (and mechanical interface apparatus **25**) to allow quick communication with other components of the interface device. Processor **410** is considered "local" to mechanical apparatus **25** and interface **14'**, where "local" herein refers to processor **410** being a separate microprocessor from any processors in host computer **16**. "Local" also preferably refers to processor **410** being dedicated to force feedback and sensor I/O of mechanical apparatus **25**, and being closely coupled to sensors **128** and actuators **126**, such as within or coupled closely to the housing for the mechanical apparatus **25**. Microprocessor **410** can be provided with software instructions to wait for commands or requests from computer **16**, decode the command or request, and handle/control input and output signals according to the command or request. In addition, processor **410** preferably operates independent of host computer **16** by reading sensor signals and calculating appropriate forces from those sensor signals, time signals, and a subroutine or "reflex process" selected in accordance with a host command. Suitable microprocessors for use as local microprocessor **410** include the MC68HC711E9 by Motorola and the PIC16C74 by Microchip, for example. Microprocessor **410** can include one microprocessor chip, or multiple processors and/or co-processor chips. In other embodiments, microprocessor **410** can include a digital signal processor (DSP) chip. Local memory **411**, such as RAM and/or ROM, is preferably coupled to microprocessor **410** in interface **14'** to store instructions for microprocessor **410** and store temporary data. In addition, a local clock **413** can be coupled to the microprocessor to provide absolute

timing information, similar to system clock **402** of host computer **16**; the timing information might be required, for example, to compute forces output by actuators **126** (e.g., forces dependent on calculated velocities or other time dependent factors). Microprocessor **410** can receive signals from sensors **128** and provide signals to actuators **126** of the interface **14'** in accordance with instructions provided by host computer **16** over bus **404**.

For example, in one embodiment, host computer **16** can provide low-level force commands over bus **404**, which microprocessor **410** directly provides to actuators **126**. In a different embodiment, host computer **16** can provide high level supervisory commands to microprocessor **410** over bus **404**, and microprocessor **410** manages low level force control ("reflex") loops to sensors **128** and actuators **126** in accordance with the high level commands. Host computer **16** can send host commands to the microprocessor to select a type of force for the microprocessor to independently implement in a reflex loop. Microprocessor **410** can continually read data from sensors **128** for the position and motion of object **44** and compute forces on the object according to the sensor data, timing data from clock **413**, and/or subroutines or reflex processes selected in accordance with the host commands. The processor then outputs a processor command to an actuator to apply the computed force. Such a process is described in greater detail in U.S. Pat. No. 5,739,811, assigned to the same assignee as the present application and incorporated by reference herein.

Microprocessor **410** can also receive commands from any other input devices **412** included on mechanical apparatus **25** or interface **14'** and provides appropriate signals to host computer **16** to indicate that the input information has been received and any information included in the input information. For example, buttons, switches, dials, or other input controls associated with apparatus **25 14** can provide signals to microprocessor **410**

In the preferred embodiment, interface **14'** is included in a housing to which mechanical apparatus **25** and user object **44** is directly or indirectly coupled. Alternatively, microprocessor **410** and/or other electronic components of interface device **14'** can be provided in a separate housing from user object **44**, apparatus **25**, sensors **128**, and actuators **126**.

Sensors **128** sense the position, motion, and/or other characteristics of user object **44** of the mechanical apparatus **25** along one or more degrees of freedom and provide signals to microprocessor **410** including information representative of those characteristics. Examples of embodiments of user objects and movement within provided degrees of freedom are described above with respect to FIGS. **2–8**. Typically, a sensor **128** is provided for each degree of freedom along which object **44** can be moved. Alternatively, a single compound sensor can be used to sense position or movement in multiple degrees of freedom. Examples of sensors suitable for several embodiments described herein, such as digital optical rotary encoders, are described above. Linear optical encoders may similarly sense the change in position of object **44** along a linear degree of freedom.

Sensors **128** provide an electrical signal to an optional sensor interface **130**, which can be used to convert sensor signals to signals that are provided to and can be interpreted by the microprocessor **410** and/or host computer **16**. Alternately, microprocessor **410** can perform these sensor interface functions without the need for a separate sensor interface **130**. The sensor signals can be processed by microprocessor **410** and may also be sent to host computer **16** which updates the host application program and sends force control signals as appropriate. Other interface mechanisms can also be used to provide an appropriate signal to host computer **16**. In alternate embodiments, sensor signals from sensors **128** can be provided directly to host computer **16**, bypassing microprocessor **410**. Also, sensor interface **130** can be included within host computer **16**, such as on an interface board or card. Alternatively, as described above, an analog sensor can be used instead of digital sensor for all or some of the sensors **128**.

Other types of interface circuitry **36** can also be used. For example, an electronic interface is described in abovementioned U.S. Pat. No. 5,576,727. The electronic interface described therein has six channels corresponding to the six degrees of freedom of a stylus. The interface allows the position of the mouse or stylus to be tracked and provides force feedback to the mouse using sensors and actuators. Sensor interface **130** can include angle determining chips to pre-process angle signals reads from sensors **128** before sending them to the microprocessor **410**. For example, a data bus plus chip-enable lines allow any of the angle determining chips to communicate with the microprocessor. A configuration without angle-determining chips is most applicable in an embodiment having absolute sensors, which have output signals directly indicating the angles without any further processing, thereby requiring less computation for the microprocessor **410** and thus little if any preprocessing. If the sensors **128** are relative sensors, which indicate only the change in an angle and which require further processing for complete determination of the angle, then angle-determining chips are more appropriate.

In either configuration, if the microprocessor **410** is fast enough, it can compute object **44** position and/or orientation (or motion, if desired) on board the embodiment and send this final data through any standard communications interface such as bus **404** on to the host computer **16** and to display screen **20**. If the microprocessor **410** is not fast enough, then the angles can be sent to the host computer **16** which can perform the calculations on its own.

Other variations may consist of microprocessor **410** which reads other input devices **412**, obtains angles, possibly computes coordinates and orientation of the object **44**, and supervises communication with the host computer **16**. Another variation may consist of dedicated subcircuits and specialized or off-the-shelf chips which read the other input devices, monitor the sensors **128**, determine angles, and handle communications with the host computer **16**, all without software or a microprocessor **410**.

Actuators **126** transmit forces to user object **44** of mechanical apparatus **25** in one or more directions along one or more degrees of freedom in response to signals received from microprocessor **410**. Typically, an actuator **126** is provided for each degree of freedom along which forces are desired to be transmitted. As explained above, actuators **126** can include active actuators and/or passive actuators.

Actuator interface **414** can be optionally connected between actuators **126** and microprocessor **410**. Interface **414** converts signals from microprocessor **410** into signals appropriate to drive actuators **126**. Interface **414** can include power amplifiers, switches, digital to analog controllers (DACs), and other components. An example of an actuator interface for active actuators is described above with reference to FIGS. **9**, **10** and **11**. In alternate embodiments, interface **414** circuitry can be provided within microprocessor **410** or in actuators **126**.

If one or more voice coils **240** are being used as actuators **126** to apply forces to object **44**, as shown in FIG. **18**, then

microprocessor **410** and/or host computer **16** can command specific current magnitude and direction to the voice coil(s) **240** to apply desired forces to object **44**. This is preferably accomplished using voice coil driver chips that can be provided in actuator interface **414**. These chips typically include a self-contained transconductance amplifier, with a current control feedback loop, to output current to the voice coil actuator. A preferred voice coil driver chip includes a switchable transconductance gain circuit that allows the user to choose between two different voltage-to-current gains. When smaller, more fine forces are to be output, the gain can be switched from a high gain to a low gain, thus decreasing the current step size. This increases the resolution of the DAC used to drive the voice coil driver. With a greater resolution, the DAC can more finely and accurately control the forces felt by the user. This fine control, however, provides a smaller range of possible forces that can be output. Thus, when a larger range of forces is desired, the gain can be switched back to the larger gain. The gain switching can be implemented using a control line from the microprocessor **410** or computer **16** to the voice coil driver chip. Suitable voice coil driver chips include the Siliconex Si9961 (with gain control), the Allegro 8932-A (with gain control), the Allegro 8958 (no gain control), and the Unitrode UC3176 (no gain control). The operation and implementation of these drivers is well known to those skilled in the art. In addition, such voice coil driver chips can be advantageously used with actuators other than voice coil actuators. For example, a servo motor can be provided with current and switchable gains from a voice coil driver chip that is inexpensive and conveniently implemented.

Other input devices **412** can optionally be included in the housing for mechanical apparatus **25** and send input signals to microprocessor **410**. Such input devices can include buttons, dials, switches, or other mechanisms. For example, in embodiments where user object **44** is a joystick (as in FIG. **8**), other input devices can include one or more buttons provided, for example, on the joystick handle or base and used to supplement the input from the user to a game or simulation. The operation of such input devices is well known to those skilled in the art.

Power supply **416** can optionally be coupled to actuator interface **414** and/or actuators **126** to provide electrical power. Active actuators typically require a separate power source to be driven. Power supply **416** can be included within the housing of mechanical apparatus **25**, or can be provided as a separate component, for example, connected by an electrical power cord.

Safety switch **418** is preferably included in interface device to provide a mechanism to allow a user to override and deactivate actuators **126**, or require a user to activate actuators **126**, for safety reasons. Certain types of actuators, especially active actuators such as motors, can pose a safety issue for the user if the actuators unexpectedly move user object **44** against the user with a strong force. In addition, if a failure in the interface system occurs, the user may desire to quickly deactivate the actuators to avoid any injury. To provide this option, safety switch **418** is coupled to actuators **126**. Safety switch **418** can be implemented such that the user must always hold or close the switch, so that if the user lets go, power to the actuators is cut off.

While this invention has been described in terms of several preferred embodiments, it is contemplated that alterations, modifications and permutations thereof will become apparent to those skilled in the art upon a reading of the specification and study of the drawings. For example, the linked members of apparatus **25** can take a number of actual physical sizes and forms while maintaining the disclosed linkage structure. In addition, other gimbal mechanisms can also be provided with a linear axis member **40** to provide three degrees of freedom. Likewise, other types of gimbal mechanisms or different mechanisms providing multiple degrees of freedom can be used with the capstan drive mechanisms disclosed herein to reduce inertia, friction, and backlash in a system. A variety of devices can also be used to sense the position of an object in the provided degrees of freedom and to drive the object along those degrees of freedom. In addition, the sensor and actuator used in the transducer system having desired play can take a variety of forms. Similarly, other types of couplings can be used to provide the desired play between the object and actuator. Furthermore, certain terminology has been used for the purposes of descriptive clarity, and not to limit the present invention. It is therefore intended that the following appended claims include all such alterations, modifications and permutations as fall within the true spirit and scope of the present invention.

What is claimed is:

1. An interface apparatus, for interfacing motion of a user manipulable object with an electrical system, said interface apparatus comprising:

a user object being physically contacted by a user;

a gimbal mechanism coupled to said user object and providing at least two degrees of freedom to said user object, said gimbal mechanism including a plurality of members, wherein a selected number of said plurality of members are formed as a unitary member in which flex is provided between said selected number of members;

an actuator coupled to said gimbal mechanism for applying a force along a degree of freedom to said user object through said unitary member, wherein said actuator applies said force in response to electrical signals produced by said electrical system; and

a sensor for detecting a position of said user object along said degree of freedom and outputting sensor signals to said electrical system;

whereby said actuator and said sensor provide an electromechanical interface between said user object and said electrical system.

2. An apparatus as recited in claim **1** wherein said gimbal mechanism provides at least two revolute degrees of freedom to said user object, each revolute degree of freedom being about an axis of rotation.

3. An apparatus as recited in claim **1** wherein said gimbal mechanism provides at least two linear degrees of freedom, each linear degree of freedom being along a linear axis.

4. An apparatus as recited in claim **1** wherein said plurality of members of said gimbal mechanism are formed as a closed-loop linkage.

5. An apparatus as recited in claim **4** wherein said closed loop linkage includes four members, wherein said four members of said closed-loop linkage are flexibly coupled to each other as segments of said unitary member.

6. An apparatus as recited in claim **4** wherein said closed loop linkage includes:

a ground member coupled to a ground surface;

first and second extension members, each extension member being coupled to said ground member; and

first and second central members, said first central member having an end coupled to said first extension member and said second central member having an end coupled to said second extension member, wherein said

central members are coupled to each other at ends not coupled to said extension members and wherein said central members are coupled to said user object.

7. An apparatus as recited in claim **6** wherein said central members are coupled to an object member which is coupled to said user object.

8. An apparatus as recited in claim **6** wherein said first and second central members are flexible and wherein said first and second central members and said first and second extension members are flexibly coupled to each other and form said unitary member.

9. An apparatus as recited in claim **8** wherein said ground member is rotatably coupled to said first and second extension members by bearings.

10. An apparatus as recited in claim **4** wherein at least one of said members flexibly coupled in said unitary member is relatively narrow in a dimension in which said member is desired to flex, and is relatively wide in other dimensions in which said member is desired to be stiff.

11. An apparatus as recited in claim **7** wherein said first and second central members are flexibly coupled to an object member that is coupled to said object, wherein said object member can rotate in a third degree of freedom about an axis extending approximately through the intersection of said two axes of rotation, said rotation in said third degree of freedom being allowed by flexibility of said central members.

12. An apparatus as recited in claim **11** wherein said actuator is a first actuator coupled to a ground member, and further comprising a second actuator coupled to a ground member of said gimbal mechanism, said second actuator being operative to apply a force in a degree of freedom to said user object in response to signals received from said electrical system.

13. An apparatus as recited in claim **12** further comprising a third actuator coupled to said object for applying a force to said user object in said third degree of freedom, said third actuator being coupled to said ground member and being coupled to said object by a torsion resistant flexure.

14. An apparatus as recited in claim **6** wherein said end of said first central member is rotatably coupled to said first extension member by a bearing, wherein said end of said second central member is rotatably coupled to said second extension member by a bearing, and wherein said central members are flexibly coupled to said user object.

15. An apparatus as recited in claim **12** wherein said central members are flexibly coupled to an object member which is coupled to said user object.

16. An apparatus as recited in claim **6** wherein said end of said first central member is flexibly coupled to said first extension member, said end of said second central member is flexibly coupled to said second extension member, and said central members are rotatably coupled to said user object by a bearing.

17. An apparatus as recited in claim **6** further comprising a third central member flexibly coupled between one of said extension members and said user object.

18. An apparatus as recited in claim **6** wherein said two degrees of freedom are rotary degrees of freedom, each degree of freedom being about an axis of rotation, and wherein said two axes of rotation are fixed with respect to said ground member, said first and second extension members being rotatable about said fixed axes of rotation, and wherein said central members are rotatable about first and second floating axes, said floating axes being movable with respect to said ground member.

19. An apparatus as recited in claim **1** wherein said user object is a joystick handle.

20. An apparatus as recited in claim **2** further comprising a linear axis member coupled to said gimbal mechanism and being independently translatable with respect to said gimbal mechanism along a third axis in a third degree of freedom, said third axis extending approximately through said intersection of said two axes of rotation, wherein said object is coupled to said linear axis member and is independently translatable along said third axis with respect to said gimbal mechanism.

21. An apparatus as recited in claim **1** wherein said actuator includes a voice coil actuator for imparting a force on said user object using magnetic fields and controlled by an electrical current.

22. An apparatus as recited in claim **21** wherein said voice coil actuator includes a plurality of sub-coils, each of said sub-coils including a different number of loops such that a constant current can be flowed through selected ones of said sub-coils to create different force values on said user object.

23. An apparatus as recited in claim **1** wherein said actuator is interfaced to said electrical system by a voice coil driver chip.

24. An apparatus as recited in claim **23** wherein said voice coil driver chip has a variable gain of voltage input to current output.

25. An interface apparatus for interfacing motion of a user manipulable object with a host computer system displaying visual images on a screen, said interface apparatus comprising:

a user manipulatable object movable in a degree of freedom by a user and being physically contacted by said user;

a gimbal mechanism coupled to said user manipulatable object and providing at least one degree of freedom to said user manipulatable object, said gimbal mechanism including a plurality of members;

a microprocessor, separate from said host computer system, for communicating with said host computer system via a communication interface by receiving host commands from said host computer system, said microprocessor being controlled by software instructions;

an actuator physically coupled to said user manipulatable object and electrically coupled to said microprocessor for applying a force to said user manipulatable object along a degree of freedom in accordance with a microprocessor command from said microprocessor, said microprocessor command being derived, at least in part, from at least one of said host commands, wherein said actuator includes a coil portion and a magnet portion which move linearly relative to each other and which use a magnetic field in applying said force; and

a sensor for detecting a position of said user manipulatable object along said degree of freedom and outputting sensor signals to said host computer system, said sensor signals including information representative of said position of said user manipulatable object.

26. An interface apparatus as recited in claim **25** wherein said coil portion and said magnet portion are provided as concentrically-arranged cylinders.

27. An interface apparatus as recited in claim **26** wherein one of said coil portion and said magnet portion is coupled to a ground.

28. An interface apparatus as recited in claim **26** wherein said magnet portion includes multiple magnets.

29. An interface apparatus as recited in claim **25** wherein said sensor includes a photodiode sensor including an emit-

ter and a detector, wherein one of said emitter and detector is coupled to a ground.

30. An interface apparatus as recited in claim **26** wherein said sensor is electrically coupled to said microprocessor, wherein said sensor outputs said sensor signals to said microprocessor, and wherein said microprocessor sends said sensor signals to said host computer system and utilizes said sensor signals to determine a force output by said actuator.

31. An interface apparatus as recited in claim **30** wherein said microprocessor is operative to provide said microprocessor command to said actuator in accordance with a microprocessor subroutine selected in accordance with said host command and stored in a memory device provided local to said microprocessor.

32. An interface apparatus as recited in claim **30** wherein said communication interface includes a serial interface.

33. An interface apparatus as recited in claim **26** wherein said user manipulatable object is one of a joystick handle, a pen-like stylus, and at least a portion of a medical instrument.

34. An interface apparatus as recited in claim **25** wherein said coil portion is cylindrical in shape and surrounds a ferrous core.

35. An interface apparatus as recited in claim **25** wherein said actuator is a grounded voice coil actuator, and further comprising an additional grounded voice coil actuator coupled to said user manipulatable object, said additional voice coil actuator being operative to apply a force along an additional degree of freedom to said user manipulatable object in response to signals received from said microprocessor.

36. An interface apparatus as recited in claim **25** wherein said voice coil actuator is interfaced to said microprocessor by a voice coil driver chip.

37. An interface apparatus as recited in claim **25** wherein said microprocessor retrieves and outputs stored force values to said actuator, said stored force values being dependent on a position of said user manipulatable object in said degree of freedom.

38. An interface apparatus as recited in claim **35** wherein said gimbal mechanism couples said voice coil actutators to said user manipulatable object.

39. An interface apparatus for interfacing motion of a user manipulable object with an electrical system, said interface apparatus comprising:

a gimbal mechanism including a plurality of members and providing two degrees of freedom to a user-manipulable object coupled to said gimbal mechanism;

a first degree of freedom actuator coupled to said gimbal mechanism, said first degree of freedom actuator including a first voice coil actuator for applying a force to said user-manipulable object in said first degree of freedom using a magnetic field;

a second degree of freedom actuator coupled to said gimbal mechanism, said second degree of freedom actuator including a second voice coil actuator for applying a force to said user-manipulable object in said second degree of freedom using a magnetic field; and

at least one sensor for detecting motion of said user-manipulable object along said first and second degrees of freedom and outputting sensor signals to said electrical system;

whereby said actuators and said sensor provide an electromechanical interface between said user-manipulable object and said electrical system.

40. An interface apparatus as recited in claim **39** wherein said gimbal mechanism includes a closed loop five member linkage, wherein each of said five members is rotatably coupled to at least two other members of said linkage.

41. An interface apparatus as recited in claim **39** wherein said gimbal mechanism includes a closed loop five member linkage, wherein a plurality of said five members are flexibly coupled to other members of said linkage.

42. An interface apparatus as recited in claim **41** wherein two of said members are flexible members.

43. An interface apparatus as recited in claim **39** wherein each of said voice coil actuators includes a coil of wire and a rotatable member that rotates through a magnetic field and is forced in a particular direction depending on a magnitude and direction of a current flowed through said coil.

44. An interface apparatus as recited in claim **43** wherein at least one of said coils of wire includes a plurality of sub-coils, each of said sub-coils including a different number of loops such that constant magnitude currents can be flowed through selected ones of said sub-coils to create different force values on said user object.

45. An interface apparatus as recited in claim **43** wherein said voice coil includes a first coil of wire used to apply said force to said user-manipulable object, and a second coil of wire used as said sensor for sensing a velocity of said user-manipulable object.

46. An interface apparatus as recited in claim **39** wherein said user-manipulable object is rotatable about two axes of rotation, and wherein said user-manipulable object is independently rotatable with respect to said gimbal mechanism about a third axis in a third degree of freedom, said third axis extending approximately through said intersection of said two axes of rotation, wherein said user-manipulable object is coupled to said linear axis member and is independently rotatable about said third axis with respect to said gimbal mechanism.

47. An interface apparatus as recited in claim **39** wherein said electrical system includes a host computer system that displays images on a display screen, and wherein said sensor is electrically coupled to a microprocessor provided locally to said interface apparatus and separate from said host computer, wherein said sensor outputs said input signals to said microprocessor, and wherein said microprocessor sends said input signals to said host computer system.

48. An interface apparatus as recited in claim **47** wherein said microprocessor is operative to provide a processor command to said actuator to output a force sensation in accordance with a process selected in accordance with a host command provided by said host computer, said process being stored in a memory device.

49. An interface apparatus as recited in claim **47** wherein said first and second degree of freedom actuators are the only actuators included in said interface device.

50. An interface apparatus as recited in claim **49**, wherein each of said actuators is grounded.

51. An interface apparatus as recited in claim **50** wherein said actuators are positioned approximately orthogonally with respect to each other.

52. An interface apparatus as recited in claim **50** wherein said actuators are rigidly coupled together.

53. An interface apparatus as recited in claim **52** wherein each of said actuators includes a coil portion that moves when said user object is moved, said coils being rigidly coupled together.

54. An interface apparatus as recited in claim **52** wherein said actuators are rigidly coupled to each other by a planar board on which said coil portion of each of said actuators is positioned.

55. An interface apparatus as recited in claim **39** further comprising an electrical interface electrically coupled

between said voice coil actuators and said electrical system, said electrical interface including a voice coil driver chip for driving said voice coil actuators.

56. An interface apparatus as recited in claim **39** wherein said actuators are linear actuators including linear relative motion between a coil and a magnet and providing forces in linear degrees of freedom to said user-manipulable object.

57. An interface apparatus for interfacing motion of a user manipulable object with an electrical system, said interface apparatus comprising:

a user-manipulable object moveable in two degrees of freedom and physically contacted by a user;

a first degree of freedom actuator coupled to said user-manipulable object, said first degree of freedom actuator including a first voice coil actuator for applying a force to said user-manipulable object in said first degree of freedom using a magnetic field;

a second degree of freedom actuator coupled to said user-manipulable object, said second degree of freedom actuator including a second voice coil actuator for applying a force to said user-manipulable object in said second degree of freedom using a magnetic field; and

at least one sensor for detecting motion of said user-manipulable object along said first and second degrees of freedom and outputting sensor signals to said electrical system;

whereby said actuators and said sensor provide an electromechanical interface between said object and said electrical system.

58. An interface apparatus as recited in claim **57** wherein each of said voice coil actuators includes a coil of wire and a member that moves through a magnetic field and is forced in a particular direction depending on a magnitude and direction of a current flowed through said coil.

59. An interface apparatus as recited in claim **58** further comprising a planar member coupled between said user-manipulable object and said first and second degree of freedom actuators, said planar member being translatable in two planar object degrees of freedom, wherein said translation of said planar member causes said user-manipulable object to move in said user-manipuable object degrees of freedom.

60. An interface apparatus as recited in claim **59** wherein said two user-manipulable object degrees of freedom are rotary degrees of freedom, and wherein said user-manipulable object is coupled to a ball joint that is rotatable in a socket, and wherein said translation of said planar member causes said ball joint to rotate in said socket and thereby rotate said user-manipulable object in said two user-manipulable object degrees of freedom.

61. An apparatus as recited in claim **59** wherein said two user object degrees of freedom are linear degrees of freedom, and wherein said user-manipulable object is translated in said user-manipulable object degrees of freedom as said planar member is translated.

62. An interface apparatus as recited in claim **59** wherein said planar member is a circuit board, and wherein coils of wire included in said voice coil actuators are etched onto said circuit board.

63. An interface apparatus as recited in claim **62** further comprising an electrical interface electrically coupled between said voice coil actuators and said electrical system, said electrical interface including a voice coil driver chip for driving said voice coil actuators.

64. An interface apparatus as recited in claim **63** wherein said voice coil driver chip is physically coupled to said circuit board.

65. An interface apparatus as recited in claim **59** wherein at least one of said coils of wire includes a plurality of sub-coils, each of said sub-coils including a different number of loops such that constant magnitude currents can be flowed through selected ones of said sub-coils to create different force values on said user-manipulable object.

66. An interface apparatus as recited in claim **59** wherein said coil of wire of said first degree of freedom voice coil actuator is a first coil of wire used to apply said force to said user-manipulable object, and wherein said first degree of freedom voice coil actuator further comprises a second coil of wire used as said sensor for sensing a velocity of said user-manipulable object.

67. An interface apparatus as recited in claim **59** wherein at least one of said coils of wire is used both for applying said force to said user-manipulable object and for sensing a velocity of said user-manipulable object.

68. An interface apparatus as recited in claim **57** wherein each of said actuators is grounded.

69. An interface apparatus as recited in claim **68** wherein said actuators are positioned approximately orthogonally with respect to each other.

70. An interface apparatus as recited in claim **69** said first and second degree of freedom actuators are the only actuators included in said interface device.

71. An interface apparatus as recited in claim **68** wherein said electrical system includes a host computer, and wherein said user-manipulatable object is coupled to each of said actuators by a linkage.

72. An interface apparatus as recited in claim **68** wherein said first and second degree of freedom actuators are linear actuators having a coil portion and a magnet portion which move linearly with respect to each other.

73. An interface apparatus as recited in claim **57** wherein said user-manipulatable object is coupled to each of said actuators by a flexible member.

74. An interface apparatus for interfacing motion of a user manipulable object with a host computer system displaying visual images on a screen, said interface apparatus comprising:

a user manipulatable object movable in two degrees of freedom by a user and physically contacted by said user;

a microprocessor, separate from said host computer system, for communicating with said host computer system via a communication interface by receiving host commands from said host computer system;

a plurality of actuators physically coupled to said user manipulatable object and electrically coupled to said microprocessor for applying a force to said user manipulatable object in said two degrees of freedom in accordance with a microprocessor command from said microprocessor, wherein said actuator includes a coil portion and a magnet portion which move linearly relative to each other and which use a magnetic field in applying said force; and

a sensor for detecting a position of said user manipulatable object along said degrees of freedom and outputting sensor signals to said host computer system, said

sensor signals including information representative of said position of said user manipulatable object.

75. An interface apparatus as recited in claim **74** further comprising at least one mechanical linkage coupled between said user manipulatable object and said actuators, said linkage providing said two degrees of freedom to said user manipulatable object.

76. An interface apparatus as recited in claim **75** wherein said coil portion and said magnet portion are provided as concentrically-arranged cylinders, wherein one of said coil portion and said magnet portion is coupled to a ground.

77. An interface apparatus as recited in claim **75** wherein said actuators are arranged approximately orthogonally with respect to each other.

78. An interface apparatus as recited in claim **74** wherein said coil portion of each of said actuators is coupled to a support board.

79. An interface apparatus as recited in claim **78** further comprising an anti-rotation flexure coupled to said support board that prevents rotational motion of said board.

* * * * *