UNITED STATES PATENT AND TRADEMARK OFFICE

BEFORE THE PATENT TRIAL AND APPEAL BOARD

ADC SOLUTIONS AUTO LLC
Petitioner

v.

THE NOCO COMPANY
Patent Owner

Patent No. 11,447,023
Issue Date: September 20, 2022

Title: PORTABLE VEHICLE BATTERY JUMP START APPARATUS WITH SAFETY PROTECTION AND JUMPER CABLE DEVICE THEREOF

Inter Partes Review No. IPR2024-00577

PETITION FOR *INTER PARTES* REVIEW OF
U.S. PATENT NO. 11,447,023
UNDER 35 U.S.C. §§ 311-319 AND 37 C.F.R. § 42

TABLE OF CONTENTS

Page

TABLE OF CONTENTS i
TABLE OF AUTHORITIES vi
EXHIBIT INDEX viii
LISTING OF CHALLENGED CLAIMS x
I. FORMALITIES 1
A. Mandatory Notices (37 C.F.R. § 42.8(a)(1)) 1
1. Real Party in Interest (37 C.F.R. § 42.8(b)(1)) 1
2. Designation of Lead and Backup Counsel (37 C.F.R. § 42.8(b)(3)) 1
3. Notice of Service (37 C.F.R. § 42.8(b)(4)) 2
4. Related Proceedings (37 C.F.R. § 42.8(b)(2)) 2
B. Grounds for Standing (37 C.F.R. § 42.104(a)) 4
C. Procedural Statements 4
II. INTRODUCTION 4
III. STATEMENT OF THE PRECISE RELIEF REQUESTED AND THE REASONS THEREFOR (37 C.F.R. § 42.22(a)) 7
IV. U.S. PATENT NO. 11,447,023 ("THE '023 PATENT") (EX1001) 8
A. Specification and Claims 8
B. Prosecution History of the '023 Patent 12
V. BACKGROUND OF JUMP STARTERS AND THE PRIOR ART REPLIED UPON IN THIS PETITION 19
A. Prior Art Patents and Printed Publications Relied Upon 19
1. Richardson 19
2. Zhao 20
3. Yu 21
4. Paparrizos 22
VI. A PERSON HAVING ORDINARY SKILL IN THE ART 22
VII. CLAIM CONSTRUCTION UNDER 37 C.F.R. § 42.104(b)(3) 23

VIII. DISCRETION UNDER § 325(d) 23
A. Petitioner does not rely on the same or substantially the same prior art and arguments 24
B. The patent office materially erred in allowing the claims of the '023 patent 27
IX. DISCRETION UNDER § 314(a) 29
X. GROUNDS FOR UNPATENTABILITY 30
A. Ground 1: Claims 1, 32, 38, 39, 47, 52, and 54 are unpatentable under 35 U.S.C. § 103(a) over Richardson in view of Zhao 30
1. Overview of the Combination 30
2. Independent Claim 1 32
a. Preamble 32
b. Limitation 1(a) 32
c. Limitation 1(b) 34
d. Limitation 1(c) 36
e. Limitation 1(d) 37
f. Limitation 1(e) 39
g. Limitation 1(f) 42
h. Limitation 1(g) 50
3. Claim 32 51
4. Independent Claim 38 52
a. Preamble 52
b. Limitation 38(a) 52
c. Limitation 38(b) 52
d. Limitation 38(c) 52
e. Limitation 38(d) 52
f. Limitation 38(e) 55
g. Limitation 38(f) 55
h. Limitation 38(g) 55
i. Limitation 38(h) 56
j. Limitation 38(i) 56

5. Independent Claim 39 56
a. Preamble 56
b. Limitation 39(a) 56
c. Limitation 39(b) 56
d. Limitation 39(c) 56
e. Limitation 39(d) 56
f. Limitation 39(e) 56
g. Limitation 39(f) 56
h. Limitation 39(g) 57
i. Limitation 39(h) 57
6. Independent Claim 47 57
a. Preamble 57
b. Limitation 47(a) 57
c. Limitation 47(b) 57
d. Limitation 47(c) 57
e. Limitation 47(d) 57
f. Limitation 47(e) 57
g. Limitation 47(f) 57
h. Limitation 47(g) 57
i. Limitation 47(h) 58
7. Independent Claim 52 58
a. Preamble 58
b. Limitation 52(a) 58
c. Limitation 52(b) 58
d. Limitation 52(c) 58
e. Limitation 52(d) 58
f. Limitation 52(e) 58
g. Limitation 52(f) 58
h. Limitation 52(g) 58
i. Limitation 52(h) 58

8. Independent Claim 54 59
a. Preamble 59
b. Limitation 54(a) 59
c. Limitation 54(b) 59
d. Limitation 54(c) 59
e. Limitation 54(d) 59
f. Limitation 54(e) 59
g. Limitation 54(f) 59
h. Limitation 54(g) 59
B. Ground 2: Claims 1, 32, 38, 39, 47, 52, and 54 are unpatentable under 35 U.S.C. § 103(a) over Yu in view of Paparrizos 59
1. Overview of the Combination 59
2. Independent Claim 1 61
a. Preamble 61
b. Limitation 1(a) 61
c. Limitation 1(b) 62
d. Limitation 1(c) 63
e. Limitation 1(d) 63
f. Limitation 1(e) 63
g. Limitation 1(f) 65
h. Limitation 1(g) 68
3. Claim 32 69
4. Independent Claim 38 70
a. Preamble 70
b. Limitation 38(a) 71
c. Limitation 38(b) 71
d. Limitation 38(c) 71
e. Limitation 38(d) 71
f. Limitation 38(e) 73
g. Limitation 38(f) 73

h. Limitation 38(g) 73
i. Limitation 38(h) 74
j. Limitation 38(i) 74
5. Independent Claim 39 74
a. Preamble 74
b. Limitation 39(a) 74
c. Limitation 39(b) 74
d. Limitation 39(c) 74
e. Limitation 39(d) 74
f. Limitation 39(e) 74
g. Limitation 39(f) 75
h. Limitation 39(g) 75
i. Limitation 39(h) 75
6. Independent Claim 47 75
a. Preamble 75
b. Limitation 47(a) 75
c. Limitation 47(b) 75
d. Limitation 47(c) 75
e. Limitation 47(d) 75
f. Limitation 47(e) 75
g. Limitation 47(f) 75
h. Limitation 47(g) 76
i. Limitation 47(h) 76
7. Independent Claim 52 76
a. Preamble 76
b. Limitation 52(a) 76
c. Limitation 52(b) 76
d. Limitation 52(c) 76
e. Limitation 52(d) 76
f. Limitation 52(e) 76

g. Limitation 52(f) 76
h. Limitation 52(g) 76
i. Limitation 52(h) 77
8. Independent Claim 54 77
a. Preamble 77
b. Limitation 54(a) 77
c. Limitation 54(b) 77
d. Limitation 54(c) 77
e. Limitation 54(d) 77
f. Limitation 54(e) 77
g. Limitation 54(f) 77
h. Limitation 54(g) 77
XI. CONCLUSION 78

TABLE OF AUTHORITIES

Page(s)

Cases

Advanced Bionics, LLC v. MED-EL Elektromedizinische Geräte GmbH,
IPR2019-01469, Paper 6 at 8 (PTAB Feb. 13, 2020) 24, 25, 26

Amazon.com, Inc. v. M2M Sols. LLC,
IPR2019-01204, Paper 14 (PTAB. Jan. 23, 2020) 26, 27

Apotex Inc. v. UCB Biopharma SPRL,
IPR2019-00400, Paper 17 at 25 (PTAB July 15, 2019) 27

Becton, Dickinson & Co. v. B. Braun Melsungen AG,
IPR2017-01586, Paper 8 (PTAB Dec. 15, 2017) 24, 25

Cross Med. Prod., Inc. v. Medtronic Sofamor Danek, Inc.,
424 F.3d 1293 (Fed. Cir. 2005) 50

Hum Industrial Technology, Inc. v. Amsted Rail Company, Inc.,
IPR2023-00540, Paper 10 (PTAB Aug. 11, 2023) 29

HTC Corp. v. Cellular Communications Equip., LLC,
877 F.3d 1361, 1367–68 (Fed. Cir. 2017) 23

Peloton Interactive, Inc. v. NEC Corporation,
IPR2023-01241, Paper 17 (PTAB Feb. 7, 2024) 26, 27

Phillips v. AWH Corp.,
415 F.3d 1303 (Fed. Cir. 2005) 23

Samsung Electronics Co. Ltd. v. Headwater Research LLC,
IPR2023-01157, Paper 9 (PTAB Jan. 22, 2024) 26, 27, 29

Vizio, Inc. v. Nichia Corp.,
IPR2017-00551, Paper 9 (PTAB July 7, 2017) 29

Wellman, Inc. v. Eastman Chem. Co.,
642 F.3d 1355, 1361 (Fed. Cir. 2011) 23, 24

Statutory Authorities

35 U.S.C. § 102(a) 7

35 U.S.C. § 103(a) ..... passim

35 U.S.C. § 314(a) 26, 29

35 U.S.C. § 315(e) 1

35 U.S.C. § 325(d) 23, 26, 29

Rules and Regulations

37 C.F.R. § 42.8 ..... passim
37 C.F.R. § 42.10(b) 4
37 C.F.R. § 42.22(a) 7
37 C.F.R. § 42.63(e) 4
37 C.F.R. § 42.100(b) 23
37 C.F.R. § 42.104(a) 4
37 C.F.R. § 42.104(b)(3) 23
37 C.F.R. § 42.106(a) 4

Other Authorities

Interim Procedure for Discretionary Denials in AIA Post-Grant Proceedings with Parallel District Court Litigation available at www.uspto.gov/sites/default/files/documents/interim_proc_discretionary_denials_aia_parallel_district_court_litigation_memo_20220621_.pdf 29, 30

EXHIBIT INDEX

Ex #	Exhibit Description
1001	U.S. Patent No. 11,447,023 ("the '023 patent")
1002	Prosecution History of the '023 patent
1003	Expert Declaration of C. Arthur MacCarley
1004	*Curriculum Vitae* for C. Arthur MacCarley
1005	U.S. Patent Publication No. 2013/0154543 A1 to Richardson et al. ("Richardson")
1006	U.S. Patent No. 9,391,467 B2 to Zhao et al. ("Zhao")
1007	Chinese Utility Model Patent No. CN 203211234 U to Yu ("Yu")
1008	Certified English Translation of Yu
1009	U.S. Patent No. 9,219,372 B2 to Paparrizos et al. ("Paparrizos")
1010	Complaint filed against Defendants in the Central District of California (ECF No. 1), filed on February 14, 2023
1011	Proof of Service upon ADC Solutions Auto LLC, Winplus North America, Inc., and Winplus NA LLC (ECF Nos. 14, 15, 16), dated February 16, 2023
1012	XR3403 Datasheet by XySemi Inc., Rev. 0.5
1013	U.S. Patent No. 9,007,015 to Nook et al. ("the '015 Patent")
1014	Final Written Decision in IPR2020-00944 (Paper 73) as to the '015 Patent, dated November 3, 2021
1015	Judgment Affirmed, Fed. Cir. R. 36 (ECF No. 52) in Nos. 2022-1646, 2022-1741, Fed. Cir. appeals from IPR2020-00944, dated February 12, 2024
1016	U.S. Patent Publication No. 2013/0285596 A1 to Zhou et al. ("Zhou")
1017	U.S. Patent No. 9,035,599 B2 to Amemiya et al. ("Amemiya")
1018	Chinese Utility Model Patent No. CN 202512152 U
1019	Certified English Translation of CN 202512152 U
1020	Chinese Utility Model Patent Publication No. CN 201226449Y

Ex #	Exhibit Description
1021	Certified English Translation of CN 201226449Y
1022	Chinese Utility Model Patent No. CN 203788026 U
1023	Certified English Translation of CN 203788026 U
1024	Declaration of Jeffrey L. Ravencraft of USB Implementers Forum, Inc., dated October 28, 2023 ("Ravencraft Decl."_
1025	Battery Charging Specification, Revision 1.0, Mar. 8, 2007 from the Universal Serial Bus Implementers Forum ("USB-IF"), Ex. D to Ravencraft Decl.
1026	Transcript of Deposition of Bryan A. Legates, dated September 25, 2023 ("Legates Dep. Tr.")
1027	Respondents' Subpoena Ad Testificandum to Bryan Legates, Ex. 2 to Legates Dep. Tr.
1028	Defendants' Stipulation of Invalidity Contentions
1029	Brents, Barry, "Automotive Electronics Drive The Need For Circuit Protection," Electronic Design (May 7, 2014), accessed via https://www.electronicdesign.com/technologies/power/article/21799679/automotive-electronics-drive-the-need-for-circuit-protection
1030	Healey, James R., "Newest VW lacks USB, only iPhones welcome," USA Today (July 8, 2014), accessed via https://www.usatoday.com/story/money/cars/2014/07/08/vw-gti-2015-usb-iphone/12378577/

LISTING OF CHALLENGED CLAIMS

U.S. Patent No. 11,447,023 (Claims 1, 32, 38, 39, 47, 52, and 54)

Claim Designation	Claim Language
Claim 1 Preamble	A jump starting apparatus configured for boosting or charging a depleted or discharged battery having a positive polarity battery terminal and a negative polarity battery terminal, the jump starting apparatus comprising:
Limitation 1(a)	a power supply;
Limitation 1(b)	a positive polarity battery terminal connector configured for connecting the jump starting apparatus to the positive polarity battery terminal of the depleted or discharged battery;
Limitation 1(c)	a negative polarity battery terminal connector configured for connecting the jump starting apparatus to the negative polarity battery terminal of the depleted or discharged battery;
Limitation 1(d)	a power switch or circuit configured to turn on power from the power supply to the positive and negative polarity battery terminal connectors;
Limitation 1(e)	a control system or circuit connected to and controlling the power switch, the control system or circuit configured to detect whether the positive and negative polarity battery terminal connectors have a correct polarity connection with the positive and negative polarity battery terminals of the depleted or discharged battery prior to turning on the power switch or circuit;
Limitation 1(f)	a USB input circuit connected to the power supply, the USB input circuit configured for converting power from a USB power source to increase power voltage to the power supply; and
Limitation 1(g)	a USB input connector connected to the USB input circuit, the USB input connector configured for connecting to the USB power source and providing power input from the USB power source through the USB input connector and the USB input circuit to the power supply.
Claim 32	The apparatus according to claim 1, wherein the DC-DC converter can be turned on and off by a microprocessor.
Claim 38 Preamble	A jump starting apparatus for boosting or charging a depleted or discharged battery having a positive polarity battery terminal and

Claim Designation	Claim Language
	a negative polarity battery terminal, the jump starting apparatus comprising:
Limitation 38(a)	a power supply;
Limitation 38(b)	a positive polarity battery terminal connector configured for connecting the jump starting apparatus to the positive polarity terminal of the depleted or discharged battery;
Limitation 38(c)	a negative polarity battery terminal connector configured for connecting the jump starting apparatus to the negative polarity terminal of the depleted or discharged battery;
Limitation 38(d)	a battery presence sensor or circuit connected in circuit with the positive polarity battery terminal connector and the negative polarity battery terminal connector;
Limitation 38(e)	a reverse polarity sensor or circuit connected in circuit with the positive polarity battery terminal connector and the negative polarity terminal connector;
Limitation 38(f)	a power switch or circuit connected or connectable in circuit with the power supply and the positive and negative polarity battery terminal connectors;
Limitation 38(g)	a microcontroller configured to receive input signals provided by the battery presence sensor or circuit and the reverse polarity sensor or circuit, the microcontroller configured to provide an output signal to control the power switch,
Limitation 38(h)	a USB input circuit connected to the power supply, the USB input circuit configured for converting power from a USB power source to increase power voltage to the power supply; and
Limitation 38(i)	a USB input connector connected to the USB input circuit, the USB input connector configured for connecting to the USB power source and providing power input from the USB power source through the USB input connector and the USB input circuit to the power supply.
Claim 39 Preamble	A jump starting device for boosting or charging a depleted or discharged battery having a positive polarity battery terminal and a negative polarity battery terminal, the jump starter device comprising:
Limitation 39(a)	a power supply;
Limitation 39(b)	a positive battery terminal connector for connecting the jump

Claim Designation	Claim Language
	starter device to the positive battery terminal of the depleted or discharged battery;
Limitation 39(c)	a negative battery terminal connector for connecting the jump starter device to the negative battery terminal of the depleted or discharged battery;
Limitation 39(d)	a power switch or circuit connected in circuit with the power supply and the positive and negative battery terminal connectors,
Limitation 39(e)	the power switch configured to turn power on from the power supply to the depleted or discharged battery when the positive and negative battery terminal connectors are properly connected to the positive and negative battery connectors;
Limitation 39(f)	a power switch control system or circuit connected to and controlling the power switch, the power switch control system or circuit configured to detect presence of the depleted or discharged battery when connected between the positive and negative battery terminal connectors and to detect polarity of the depleted or discharged battery when connected between the positive and negative battery terminal connectors
Limitation 39(g)	a USB input circuit connected to the power supply, the USB input circuit configured for converting power from a USB power source to increase power voltage to the power supply; and
Limitation 39(h)	a USB input connector configured for connecting to the USB power source and providing power input from the USB power source through the USB input connector and the USB input circuit to the power supply.
Claim 47 Preamble	A jump starting device for boosting or charging a depleted or discharged battery having a positive polarity battery terminal and a negative polarity battery terminal, the jump starter device comprising:
Limitation 47(a)	a power supply;
Limitation 47(b)	a positive battery terminal connector for connecting the jump starter device to the positive battery terminal of the depleted or discharged battery;
Limitation 47(c)	a negative battery terminal connector for connecting the jump starter device to the negative battery terminal of the depleted or discharged battery;
Limitation 47(d)	a power switch or circuit connected in circuit with the power

Claim Designation	Claim Language
	supply and the positive and negative battery terminal connectors,
Limitation 47(e)	the power switch configured to turn power on from the power supply to the depleted or discharged battery when connected to the positive and negative battery terminal connectors;
Limitation 47(f)	a power switch control system or circuit connected to and controlling the power switch, the power switch control system or circuit configured to detect presence of the depleted or discharged battery when connected between the positive and negative battery terminal connectors and to detect correct or incorrect polarity of the depleted or discharged battery when connected between the positive and negative battery terminal connectors;
Limitation 47(g)	a USB input circuit connected to the power supply, the USB input circuit configured for converting power from a USB power source to increase power voltage to the power supply; and
Limitation 47(h)	a USB input connector connected to the USB input circuit, the USB input connector configured for connecting to the USB power source and providing power input from the USB power source through the USB input connector and the USB input circuit to the power supply.
Claim 52 Preamble	A jump starting apparatus configured for boosting or charging a depleted or discharged battery having a positive polarity battery terminal and a negative polarity battery terminal, the jump starting apparatus comprising:
Limitation 52(a)	a power supply;
Limitation 52(b)	a positive polarity battery terminal connector configured for connecting the jump starting apparatus to the positive polarity battery terminal of the depleted or discharged battery;
Limitation 52(c)	a negative polarity battery terminal connector configured for connecting the jump starting apparatus to the negative polarity battery terminal of the depleted or discharged battery;
Limitation 52(d)	a power switch or circuit configured to turn on power from the power supply to the positive and negative polarity battery terminal connectors;
Limitation 52(e)	a control system or circuit connected to and controlling the power switch, the control system or circuit configured to detect whether the positive and negative polarity battery terminal

Claim Designation	Claim Language
	connectors have a correct polarity connection with the positive and negative polarity battery terminals of the depleted or discharged battery prior to turning on the power switch or circuit;
Limitation 52(f)	a USB input connector configured for removably connecting to a USB power source and providing power input from the USB power source to the USB input connector; and
Limitation 52(g)	a USB input circuit connecting the USB input connector to the power supply, the USB input circuit comprising a DC/DC converter, the USB input circuit configured for converting power from the USB power source to increase power voltage to the power supply,
Limitation 52(h)	wherein the DC-DC converter can be turned on and off by an output from the microcontroller.
Claim 54 Preamble	A jump starting apparatus configured for boosting or charging a depleted or discharged battery having a positive polarity battery terminal and a negative polarity battery terminal, the jump starting apparatus comprising:
Limitation 54(a)	a power supply;
Limitation 54(b)	a positive polarity battery terminal connector configured for connecting the jump starting apparatus to the positive polarity battery terminal of the depleted or discharged battery;
Limitation 54(c)	a negative polarity battery terminal connector configured for connecting the jump starting apparatus to the negative polarity battery terminal of the depleted or discharged battery;
Limitation 54(d)	a power switch or circuit configured to turn on power from the power supply to the positive and negative polarity battery terminal connectors;
Limitation 54(e)	a control system or circuit connected to and controlling the power switch, the control system or circuit configured to detect whether the positive and negative polarity battery terminal connectors have a correct polarity connection with the positive and negative polarity battery terminals of the depleted or discharged battery and prevent an incorrect polarity connection with the positive and negative polarity battery terminals of the depleted or discharged battery prior to turning on the power switch or circuit;
Limitation 54(f)	a USB input connector; and

Claim Designation	Claim Language
Limitation 54(g)	a USB input circuit connecting the USB input connector to the power supply, the USB input circuit comprising a DC/DC converter for up-converting the voltage from the USB input connector to the power supply.

I. FORMALITIES

A. Mandatory Notices (37 C.F.R. § 42.8(a)(1))

1. Real Party in Interest (37 C.F.R. § 42.8(b)(1))

Petitioner ADC Solutions Auto LLC ("ADC" or "Petitioner") is a real party-in-interest in this Petition.

Winplus North America, Inc. and Winplus NA, LLC are also named as real parties-in-interest in this Petition. Winplus North America, Inc. and Winplus NA, LLC are co-defendants with ADC in the District Court Litigation identified in Section I.A.4. Petitioner does not believe Winplus North America, Inc. and Winplus NA, LLC rise to the level of real parties-in-interest as both entities are non-operational and have not exercised any control over this Petition or ADC's decision to file this Petition. However, because Winplus North America, Inc. and Winplus NA, LLC agree to be bound by the estoppel provisions of 35 U.S.C. § 315(e), and in order to prevent a costly challenge by Patent Owner regarding whether these entities are real parties-in-interest, Winplus North America, Inc. and Winplus NA, LLC have been named as real parties-in-interest.

2. Designation of Lead and Backup Counsel (37 C.F.R. § 42.8(b)(3))

Lead Counsel	First Backup Counsel
Daisy Manning Reg. No. 66,369 Husch Blackwell LLP 8001 Forsyth Blvd., Suite 1500	Paul L. Smelcer Reg. No. 74,975 Husch Blackwell LLP 8001 Forsyth Blvd, Suite 1500

St. Louis, MO 63105 (314) 480-1500 Tel (314) 480-1505 Fax PTAB-DManning@huschblackwell.com	St. Louis, MO 63105 (314) 480-1500 Tel (314) 480-1505 Fax paul.smelcer@huschblackwell.com

3. Notice of Service (37 C.F.R. § 42.8(b)(4))

Please direct all correspondence to lead counsel at the above address. Petitioner also consents to email service at the above email addresses for lead and back-up counsel and hand delivery at the above addresses for lead and backup counsel.

4. Related Proceedings (37 C.F.R. § 42.8(b)(2))

U.S. Patent No. 11,447,023 ("the '023 patent") is presently asserted in the litigation proceedings bulleted below.

- Actions in which ADC is a party:
  - *The NOCO Company v. Winplus North America Inc. et al.*, Case No. 8:23-cv-00269 (C.D. Cal.) ("District Court Litigation"); and
  - *Certain Portable Battery Jump Starters and Components Thereof (II)*, Inv. No. 337-TA-1359 (U.S. International Trade Commission) ("ITC Action").
- Actions in which ADC is not a party:

- *The NOCO Company v. Shenzhen Carku Technology Co., Ltd.*, Case No. 1:23-cv-00911 (N.D. Ill.);
- *The NOCO Company v. Hulkman LLC et al.*, Case No. 3:23-cv-00642 (N.D. Cal.);
- *The NOCO Company v. Youxiangongsi*, Case No. 4:23-cv-00554 (S.D. Tex.); and
- *The NOCO Company v. Deltona Transformer Corporation et al.*, Case No. 6:23-cv-02194 (M.D. Fla.).

As noted above, ADC is a party to two of the pending proceedings in which the ’023 patent is asserted. The earliest service of a complaint asserting the ’023 patent against ADC occurred in the District Court Litigation in the Central District of California on February 16, 2023. EX1010; EX1011. Thus, this Petition is filed within one year after ADC was served with a complaint for infringement of the ’023 patent.

ADC has not filed a separate civil action challenging the validity of the claims of the ’023 patent, although ADC asserts invalidity defenses in connection with the pending ITC Action and will assert invalidity in the District Court Litigation (if, and when, the current stay of that action is lifted).

B. Grounds for Standing (37 C.F.R. § 42.104(a))

Petitioner hereby certifies the ’023 patent is available for *inter partes* review, and Petitioner is not barred or estopped from requesting an *inter partes* review challenging the patent claims on the Grounds identified in the petition.

C. Procedural Statements

This Petition is filed in accordance with 37 C.F.R. § 42.106(a). A Power of Attorney (37 C.F.R. § 42.10(b)) and Exhibit List (37 C.F.R. § 42.63(e)) are filed concurrently with this Petition. The fee is being paid via Deposit Acct. No. 11-0160. The United States Patent and Trademark Office is authorized to charge any fee deficiency, or credit any overpayment, to Deposit Acct. No. 11-0160.

II. INTRODUCTION

ADC Solutions Auto LLC (“ADC” or “Petitioner”) respectfully requests the Board institute *inter partes* review of U.S. Patent No. 11,447,023 (“the ’023 patent”), which is assigned to The NOCO Company (“Patent Owner”).

The ’023 patent is directed to a jump starter that can boost, charge, or “jump start” a depleted or discharged vehicle battery. This jump starter includes two conventional safety features to prevent damage to the device or harm to the user: (1) reverse polarity detection, and (2) battery presence detection (although certain claims of the ’023 patent do not require battery detection). In IPR2020-00944, which involved similar claims from a parent patent, the Board found that both

safety features were disclosed, and the sole independent claim was anticipated by the Richardson reference, which is asserted in Ground 1 herein. Accordingly, the factual findings of the Board's Final Written Decision in IPR2020-00944, which has been affirmed on appeal, establish that Richardson similarly discloses all corresponding limitations of the independent claims of the '023 patent, except for USB charging of the batteries of the jump starter.

The USB charging feature is the lynchpin of the invalidity inquiry for the '023 patent. Specifically, during prosecution of the '023 patent, Patent Owner amended its claims several times until every independent claim recited limitations directed to USB charging. Patent Owner's amendments were made to overcome the Examiner's anticipation rejections based on Richardson. Patent Owner ultimately prevailed in obtaining a Notice of Allowance after narrowing the claims such that each issued claim requires the USB charging feature. However, the '023 patent admits Patent Owner's USB charging feature is based on ***standard*** USB technology and the conventional power conversion technique of voltage boosting via a DC-DC converter. Indeed, well before the claimed priority date, the portable power industry had already utilized standard USB input at a 5V rating to charge battery packs rated above 5V via DC-DC boosting. As detailed herein, the prior art is replete with examples where a DC-DC converter was used in charging multicell, series-connected battery packs (such as 9V or 12V batteries) from a 5V USB input.

Since its inception, a primary goal of USB technology—and one of the most desirable features for users and producers of USB-capable electronic devices—is enabling the use of standard cables, connectors, and power supplies for battery-powered electronics. Through such standardization, professionals and consumers alike could reduce the need to haul multiple proprietary cables and power supplies alongside their growing set of battery-powered devices. Thus, the desirability of USB charging for a variety of devices—including those with battery packs rated above the traditional 5V USB input—was undeniable before Patent Owner's alleged invention. And a person having ordinary skill in the art ("PHOSITA") was well-equipped to implement standard USB technology and components alongside published reference circuits for commercially-available DC-DC converter chips (or other well-known DC-DC boosting techniques) to implement the claimed USB charging feature in a jump starter. A petition for *inter partes* review must demonstrate "a reasonable likelihood that the petitioner would prevail with respect to at least 1 of the claims challenged in the petition." 35 U.S.C. § 314(a). The Petition meets this threshold.

III. STATEMENT OF THE PRECISE RELIEF REQUESTED AND THE REASONS THEREFOR (37 C.F.R. § 42.22(a))

Petitioner respectfully requests a final written decision that Claims 1, 32, 38, 39, 47, 52, and 54 of the ’023 patent are invalid under 35 U.S.C. § 103(a). Claims 1, 38, 39, 47, 52, and 54 are independent. Claim 32 depends from claim 1.

Petitioner requests *inter partes* review of the ’023 patent based on the following patents and patent publications, all of which were filed, issued, or published prior to the earliest claimed priority date of the ’023 patent, which is no earlier than July 3, 2014. The prior art relevant to this Petition includes: U.S. Patent Publication No. 2013/0154543 A1 (“Richardson”), published on June 20, 2013 (EX1005); U.S. Patent No. 9,391,467 B2 (“Zhao”), filed on January 17, 2014 (EX1006); Chinese Utility Model Patent No. CN 202311234 U (“Yu”), issued on September 25, 2013 (EX1007; EX1008); and U.S. Patent No. 9,219,372 B2 (“Paparrizos”), filed January 22, 2013 (EX1009).

Richardson qualifies as prior art under 35 U.S.C. §§ 102(a)(1) and 102(a)(2). Zhao and Paparrizos qualify as prior art under 35 U.S.C. § 102(a)(2). Yu qualifies as prior art under 35 U.S.C. § 102(a)(1).

This Petition further relies upon the Declaration of C. Arthur MacCarley, Ph.D. PE. (“MacCarley Decl.”) (EX1003); and the MacCarley curriculum vitae (EX1004)), which is relevant to the skill, knowledge, and experience of a

PHOSITA at the time of the alleged invention and how that person would have understood and applied the prior art. *See* EX1003, ¶¶ 1-17. The statutory grounds on which the challenge is based are:

1) Claims 1, 32, 38, 39, 47, 52, and 54 are unpatentable under 35 U.S.C. § 103(a) over Richardson in view of Zhao.

2) Claims 1, 32, 38, 39, 47, 52, and 54 are unpatentable under 35 U.S.C. § 103(a) over Yu in view of Paparrizos.

IV. U.S. PATENT NO. 11,447,023 ("THE '023 PATENT") (EX1001)

A. Specification and Claims

The '023 patent relates to a device which can boost, charge, or "jump start" batteries such as the starter battery of a vehicle. *See* EX1001, Abstract, 1:8-10; EX1003, ¶¶ 18-27. This type of device is referred to herein as a "jump starter."

The claims of the '023 patent merely add ***standard*** Universal Serial Bus ("USB") technology to a conventional jump starter to allow the internal battery of the device to be charged/recharged through a ***standard*** USB connector and USB power supply. *See* EX1001, 8:63-9:6 (Limitations 1(f)-(g)); *id.* at 12:6-15 (Limitations 38(h)-(i)); *id.* at 12:42-49 (Limitations 39(g)-(h)); *id.* at 13:56-65 (Limitations 47(g)-(h)); *id.* at 14:35-43 (Limitations 52(f)-(g)); *id.* at 15:8-12 (Limitations 54(f)-(g)). Indeed, the primary discussion of the USB charging feature in the written description of the '023 patent consists of three sentences which admit

the claimed functionality can be achieved through "a ***standard*** USB charger" and "a **standard** micro-USB connector" thereby "allowing **standard** cables to be used." *See* EX1001, 7:21-29 (emphasis added). The '023 patent also discloses that "USB charge circuit 52 converts power from ***any*** USB charger power source, charge voltage and current for charging the lithium battery pack 32." EX1001, 5:15-17 (emphasis added).

The "USB charge circuit 52" is also depicted in Figure 2C of the '023 patent. *See* EX1001, Fig. 2C. The component labeled "XR3403" is central to the USB charge circuit. *See id.* (annotated).

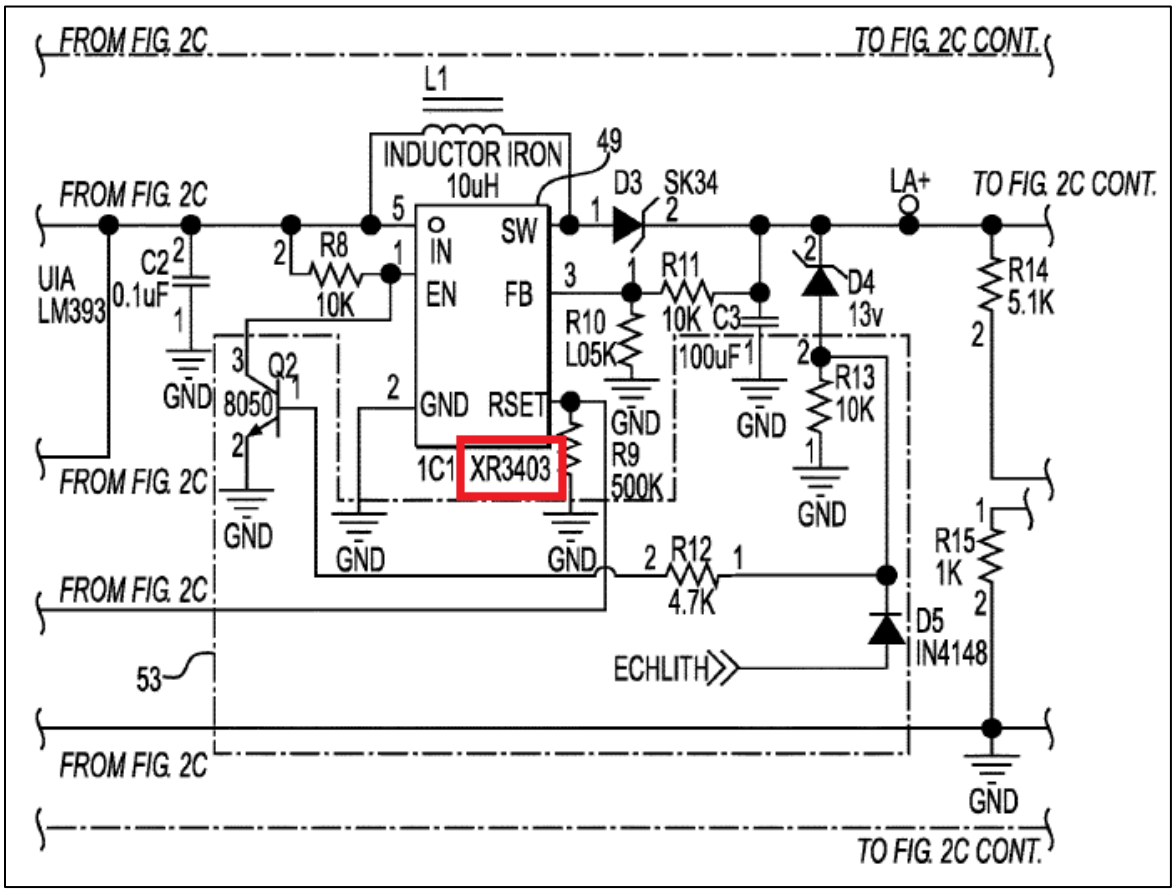

Based on the aforementioned disclosures, and in accordance with documentation submitted by Patent Owner during prosecution, the XR3403 chip is a commercial, off-the-shelf integrated circuit which can accept a 5V input voltage and boost such voltage to 12V via conventional DC-DC techniques. *See* EX1012 at 6 ("Normal application… Input 5V to Output 9V 12V 24V"); EX1003, ¶¶ 26-27. In other words, USB charge circuit 52 utilizes a conventional power conversion technique whereby a "boost converter" (*e.g.*, the XR3403 chip) can boost the 5V input from a standard USB charging source to a higher voltage level, such as the approximate 12V that the '023 patent explains could charge a 3-cell, series-connected lithium-ion battery pack of a jump starter. EX1001, 7:25-27; EX1003, ¶¶ 26-27.

Aside from standard USB technology and conventional power conversion techniques, the remaining limitations of the independent claims relate to other conventional jump starter components or features, such as:

- A power supply (*e.g.*, a jump starter's battery). *See, e.g.*, Limitation 1(a) at EX1001, 8:44.
    - For example, the '023 patent admits it was known for portable booster devices to have a battery. EX1001, 1:10-16.
- Battery terminal connectors (*e.g.*, cable clamps such as traditional alligator clips). *See, e.g.*, Limitations 1(b)-(c) at EX1001, 8:45-52.

- For example, the ’023 patent discusses prior art uses of “jumper terminals or clamps.” *See* EX1001, 1:17-24, 1:10-16.

- A circuit-controlled or microprocessor-controlled switch for connecting power from the jump starter’s battery to the vehicle battery. *See, e.g.*, Limitation 1(e) at EX1001, 8:56-62.
    - For example, the ’023 patent discusses the prior art’s use of circuit-controlled switches in jump starting devices. *See, e.g.*, EX1001, 1:25-35; *id.* at 2:34-38.
- Performing safety checks via sensors or circuitry that determine whether a battery is present or absent (*e.g.*, whether the cable clamps are properly connected to battery terminals versus a disconnected or dislodged state)—*see, e.g.*, Limitations 38(d), 39(f), 47(f)[1]—and whether the cable clamps have been connected to the vehicle battery with proper polarity (*e.g.*, red clamp to positive terminal and black clamp to negative terminal, assuming that the traditional cable coloring scheme is used). *See, e.g.*, EX1001, 8:56-62 (Limitation 1(e)).
    - For example, the ’023 patent admits determining proper connection status (such as battery presence and proper polarity connection) was a

[1] Checking for the presence/absence of a vehicle battery is not required by independent claims 1, 52, and 54.

known technique in the prior art. EX1001, 1:25-35, 1:49-64; *see generally*, *id.*, 1:25-3:10.

B. Prosecution History of the ’023 Patent

The ’023 patent stems from a line of continuation applications claiming priority back to U.S. Patent Application No. 14/325,938, which was filed on July 3, 2014, and issued as U.S. Patent No. 9,007,015 (“the ’015 patent”) (EX1013). EX1001, [60]; EX1003, ¶ 28. All claims of the ’015 patent were challenged in *inter partes* review, IPR2020-00944, which resulted in a Final Written Decision (“the ’015-FWD”) finding all claims, except claim 11, unpatentable. EX1014; EX1003, ¶ 29. The Federal Circuit affirmed the ’015-FWD under Federal Circuit Rule 36. *The NOCO Company, Inc. v. Shenzhen Carku Technology Co., Ltd.*, Appeal Nos. 2022-1646, 2022-1741, Dkt. 54 at 2 (Fed. Cir. Feb. 12, 2024) (EX1015).

Many arguments and findings in IPR2020-00944 are germane to the ’023 patent and this Petition for several reasons. For example, the ’015 patent and ’023 patent share a common (or substantially indistinguishable) specification. *Compare generally*, EX1001 *with* EX1013. The claims of the ’015 patent include similar subject matter as those of the ’023 patent, such as a “power supply,” a “switch” (controlled by a microcontroller), and safety checks for reverse polarity and vehicle battery presence. *Compare*, *e.g.*, EX1013, 8:4-37 (claim 1) *with* EX1001,

12:16-49 (claim 39). The Board found the Richardson prior art reference—asserted in Ground 1 of this Petition—anticipated the only independent claim and several dependent claims of the ’015 patent.

The following are non-limiting examples of the Board’s findings in IPR2020-00944 particularly pertinent to this Petition:

- In connection with Grounds based on the Richardson reference, the Board found the following:
    - “We are persuaded that Richardson discloses an apparatus for jump starting a vehicle engine.” EX1014 at 50.
    - Richardson’s disclosure relating to “Jump Starter Batteries 22” constitutes an internal power supply as recited by claim 1 of the ’015 patent. *See* EX1014 at 50-51.
    - “We determine Petitioner has shown that Richardson’s vehicle voltage sensor 30 is ‘a vehicle battery isolation sensor connected in circuit with said positive and negative polarity outputs, configured to detect presence of a vehicle battery connected between said positive and negative polarity outputs’ as recited in claim 1.” EX1014 at 53. This finding was based, at least in part, on evidence and agreement by the parties’ experts that “Richardson’s vehicle battery sensor 30 outputs approximately 0.7 volts to the microcontroller when the battery is

present, and approximately 0.032 volts to the microcontroller when the battery is not present." EX1014 at 52.

  - Richardson's "reverse voltage sensor 24" was shown to be a "reverse polarity sensor…" as claimed by claim 1 of the '015 patent. *See* EX1014 at 53-54.
  - Richardson's "contact relay 34" was shown to be a "power switch…" as claimed by claim 1 of the '015 patent. *See* EX1014 at 54-55.
  - Richardson's "system microcontroller 12" was shown to constitute a "microcontroller…" as claimed by claim 1 of the '015 patent. *See* EX1014 at 55-67.
  - Richardson anticipates claim 1 of the '015 patent. *See generally* EX1014 at 47-67.

- In connection with claim 11 of the '015 patent—which involves a limitation similar to the USB charging limitations present in every independent claim of the '023 patent—the Board found the following:
  - Petitioner only asserted secondary references "with USB outputs to charge other devices" (as opposed to USB inputs) and Petitioner's secondary references only disclosed a "non-USB, '14V 1A' input port for charging the jump starter…." EX1014 at 92.

- Petitioner failed to demonstrate obviousness of claim 11 due to "conclusory" positions and inadequate evidence. *See, e.g.*, EX1014 at 92-94. For example, Petitioner's expert provided "no explanation for the embedded assertion that a USB port is commonly used as a power input to devices, e.g., how common and to what types of devices." EX1014 at 93.
- Petitioner's "additional arguments, explanations, and evidence submitted in the Reply" would not be considered by the Board. *See* EX1014 at 94.

During the pendency of IPR2020-00944, Patent Owner was prosecuting the '023 patent. Patent Owner originally presented claims substantially similar to those of the '015 patent. *Compare* EX1002 at 40-43 *with* EX1013, 8:4-10:22. The claims were amended twice before the Examiner issued a first non-final rejection on August 12, 2020. EX1002 at 88-95, 113-124, 151-182; EX1003, ¶ 30. Prior to this first office action, none of the four then-pending independent claims (then-numbered 1, 29, 30, and 38) included limitations directed to the USB charging feature (which was only recited in then-numbered claim 11). *See* EX1002 at 113-114 (claim 1), 119-120 (claim 29), 120-121 (claim 30), 123-124 (claim 38). Among other rejections, the Examiner found all pending independent claims and

certain dependent claims anticipated by Richardson. *See* EX1002 at 155-167; EX1003, ¶ 30.

In response, Patent Owner amended each pending independent claim to include two limitations directed to the USB charging feature. *See* EX1002 at 256-270. With the amendments, Patent Owner argued:

> ***Richardson*** does not teach a jump starting apparatus, including a USB charge circuit and USB connector let alone the claimed subject matter, including "a USB charge circuit connected to the power supply, the USB charge circuit configured for converting power from a USB charger to charge voltage and current for charging the power supply; and a USB connector configure for connecting to the USB charger and providing charge input from the USB charger through the USB connector to the USB charge circuit[.]"

EX1002 at 272-273 (emphasis in original). Patent Owner did not contest that the remaining claim limitations were taught by Richardson. *See id.*; EX1003, ¶ 31.

A final rejection issued on February 10, 2021. *See* EX1002 at 286-316. Patent Owner responded with amendments and argument on May 10, 2021. *See* EX1002 at 359-387. Among other arguments, Patent Owner reiterated "***Richardson*** fails to disclose a USB <u>input</u> for charging the internal power source of the jump starting device[.]". *See* EX1002 at 376 (emphasis in original); EX1003, ¶ 32.

Patent Owner subsequently filed a request for continued examination and the Examiner issued a non-final rejection on June 25, 2021. *See* EX1002 at 435-463.

Among other rejections, the Examiner rejected all pending independent claims based on Richardson in view of Tinaphong. *See id*. The Examiner noted "Tinaphong discloses at least a USB input charge circuit[.]". *See* EX1002 at 441; EX1003, ¶ 33.

In response, Patent Owner amended the claims on October 25, 2021 to add "<u>the USB input charge circuit comprising a DC/DC converter</u>, the USB input charge configured for converting power from a USB charger to <u>increase</u> charge voltage…." *See* EX1002 at 477-507. Notably, Patent Owner did not dispute that Richardson teaches all limitations of the independent claims aside from the USB limitations. *See id.*; EX1003, ¶ 34.

Instead, focusing on the USB charging limitations, Patent Owner argued Tinaphong teaches away from modifying Richardson to include the USB charging feature because Tinaphong's power conversion technique would *step down* a 5V input to 3.7V rather than *step up* (e.g., increase or up-convert voltage) as purportedly required by Patent Owner's recently-amended claims. *See id.* at 499-500; EX1003, ¶ 35. Specifically, Patent Owner argued "[d]ropping down the voltage as taught by ***Tinaphong*** is the exact opposite and wrong direction to the requirement of stepping up or increasing the charging voltage to charge the internal lithium polymer battery 18 of ***Tinaphong*** to at least 12 V so that the apparatus

could be modified to become or be used as a jump starter as asserted in this rejection." *See id.* at 500 (emphasis in original).

In response, the Examiner withdrew the rejections based on Patent Owner's arguments distinguishing between bucking and boosting a USB input voltage. *See* EX1002 at 513-522. Patent Owner subsequently submitted three more Information Disclosure Statements on February 24, June 10, and August 17, 2022, respectively—which collectively identified 365 references. *See* EX1002 at 609-611, 924-936, 1073-1083, 1403-1413, 2200-2212; EX1003, ¶ 36.

In a subsequent Notice of Allowability, the Examiner identified an additional prior art reference, U.S. Publication No. 2012/0187897 to Lenk, that teaches voltage of a USB power source "at a voltage higher than the battery voltage, thus not requiring any voltage boost." *See* EX1002 at 642. Stated differently, the Notice of Allowability only discussed prior art teaching bucking (i.e., down-converting or decreasing) a USB input voltage. EX1003, ¶ 37. The Examiner did not appear to conduct further searches for prior art disclosing the boosting (i.e., up-converting or increasing) a USB input voltage. Specifically, the Examiner did not find—nor did Patent Owner submit for consideration—the Zhao and Paparrizos references relied upon in the Grounds of this Petition which disclose DC-DC ***boosting*** of a USB input voltage received from a USB power

source. *See generally* EX1002; *see also* EX1006, Abstract, 1:22-23, 1:25-27, 3:6-11; EX1009, 3:58-4:4; EX1003, ¶ 37.

V. BACKGROUND OF JUMP STARTERS AND THE PRIOR ART REPLIED UPON IN THIS PETITION

A. Prior Art Patents and Printed Publications Relied Upon

This challenge is based on four prior art references: Richardson, Zhao, Yu, and Paparrizos.

1. Richardson

Richardson discloses a portable power source that can provide supplemental power to a vehicle's electrical system and jump start vehicle batteries. *See, e.g.*, EX1005, ¶¶ [0002], [0006]-[0007]. The system embodied by "[j]ump starter 10 includes a programmable microprocessor 12" which receives various inputs and produces various outputs to control the system. *See* EX1005, ¶ [0014]; EX1003, ¶ 47.

Richardson acknowledges various "potential problems" can occur when jump starting a vehicle battery, such as cross-connecting the jump starter's battery with the vehicle battery or inadvertently contacting live (*i.e.* electrified) cable clamps. *See* EX1005, ¶ [0005]. These problems can cause sparking or battery explosion and fire. *See id*. Accordingly, Richardson's device "performs real-time monitoring of all system parameters to increase the safety and effectiveness of the unit's operation while providing additional parametric and diagnostic information

obtained before, during and after the vehicle starting operation." EX1005, ¶ [0006]. Among these safety features are Richardson's disclosure of a jump starter that both (1) determines whether a proper polarity connection exists between the jump starter battery and the vehicle battery via "reverse voltage sensor 24" (*see, e.g.*, EX1005, ¶ [0016]), and (2) determines the connection status of a vehicle battery via "vehicle voltage sensor 30." *See, e.g.*, EX1005, ¶ [0016]; EX1003, ¶ 48.

Richardson is in the same field of endeavor as the '023 patent. *Compare* EX1001, Abstract *with* EX1005, Abstract. Additionally, Richardson addresses subject matter that was reasonably pertinent to problems facing the named inventors. *Compare* EX1001, 1:17-24 *with* EX1005, Abstract; EX1003, ¶ 49.

2. Zhao

Zhao discloses a battery charging system that includes a step-up converter for boosting a DC input voltage. EX1006, Abstract. Specifically, Zhao's battery charging system can charge a multicell, series-connected lithium-ion battery pack from a 5V input provided by a USB power source. *See, e.g.*, EX1006, 1:22-27; *id.* at 2:63-3:11. Zhao's system also includes "control circuit 102" which can control the ON/OFF state of the step-up converter. *See, e.g.*, EX1006, 4:59-64; EX1003, ¶ 50.

Zhao is in the same field of endeavor as the '023 patent. *Compare* EX1001, 1:42-44, 4:4-16 *with* EX1006, 1:19-30. Additionally, Zhao addresses subject

matter that was reasonably pertinent to problems facing the named inventors. *Compare* EX1001, 4:4-16, 7:25-28 *with* EX1006, 1:25-27, 3:6-11; EX1003, ¶ 51.

3. Yu

Yu discloses an automotive starting device (*e.g.*, jump starter). EX1007; EX1008[2], Abstract. Yu's device comprises an internal battery pack, a control module with a microprocessor, and an output terminal. EX1008, Abstract, ¶ [0004]. The device further comprises a microprocessor-controlled relay which can connect power from the internal battery to a vehicle battery for a jump start. EX1008, ¶ [0004]. Before initiating a jump start, Yu's device detects an external battery voltage to determine if a vehicle battery is present and separately detects whether the device is connected to the external battery with the wrong polarity. EX1008, ¶ [0009]; EX1003, ¶ 52.

Yu is in the same field of endeavor as the '023 patent. *Compare* EX1001, Abstract *with* EX1008, Abstract. Additionally, Yu addresses subject matter that was reasonably pertinent to problems facing the named inventors. *Compare* EX1001, 1:17-24 *with* EX1008, Abstract; EX1003, ¶ 53.

[2] EX1007 is the original Chinese language patent for the Yu reference. EX1008 is the certified English translation thereof. Petitioner's citations to this reference herein will be to the English translation, EX1008.

4. Paparrizos

Paparrizos discloses a battery charging circuit with a forward boost mode that can boost a lower input voltage to a sufficient voltage to charge higher voltage batteries. EX1009, Abstract, 3:31-35, 8:17-31. Paparrizos's circuit can charge multicell, series-connected lithium-ion battery packs from a 5V USB power source. EX1009, 2:30-40, 8:17-31; EX1003, ¶ 54.

Paparrizos is in the same field of endeavor as the '023 patent. *Compare* EX1001, 1:42-44, 4:4-16 *with* EX1009, 1:18-26, 1:30-39, 2:30-40. Additionally, Paparrizos addresses subject matter that was reasonably pertinent to problems facing the named inventors. *Compare* EX1001, 4:4-16, 7:25-28 *with* EX1009, 1:23-26, 8:17-31; EX1003, ¶ 55.

VI. A PERSON HAVING ORDINARY SKILL IN THE ART

The prior art and the MacCarley Declaration demonstrate a PHOSITA, as of the claimed priority date of July 3, 2014, would have been a person with at least a bachelor's degree in electrical engineering or its equivalent and at least two years of experience in the field of electrical engineering including some experience with DC power supply or battery charger design. EX1003, ¶¶ 39-42; EX1014 at 10-11. Less work experience could be compensated for by a higher level of education, such as a master's degree, and vice versa. EX1003, ¶ 42.

VII. CLAIM CONSTRUCTION UNDER 37 C.F.R. § 42.104(b)(3)

Unless otherwise addressed herein, the terms of the unexpired ’023 patent’s claims are to be given their plain and ordinary meaning, as understood by one of ordinary skill in the art, in view of the ’023 patent’s specification. *See* 37 C.F.R. § 42.100(b); 83 FR 51340; *Phillips v. AWH Corp*., 415 F.3d 1303 (Fed. Cir. 2005) (en banc); EX1003, ¶¶ 43-45.

At this time, Petitioner does not believe any construction would have an impact on the invalidity analyses set forth herein. *See HTC Corp. v. Cellular Communications Equip., LLC*, 877 F.3d 1361, 1367–68 (Fed. Cir. 2017) (affirming the Board absent an express construction of a term). Based on the evidence below and the similarities between the prior art and the specification and claims of the ’023 patent, Petitioner submits there are no formal claim constructions necessary in this proceeding because “claim terms need only be construed to the extent necessary to resolve the controversy.” *Wellman, Inc. v. Eastman Chem. Co.*, 642 F.3d 1355, 1361 (Fed. Cir. 2011) (internal quotations omitted).

VIII. DISCRETION UNDER § 325(d)

The Board uses a two-part framework to evaluate arguments under 35 U.S.C. § 325(d): “(1) whether the same or substantially the same art previously was presented to the Office or whether the same or substantially the same arguments previously were presented to the Office; and (2) if either condition of

the first part of the framework is satisfied, whether the petitioner has demonstrated that the Office erred in a manner material to the patentability of challenged claims." *Advanced Bionics, LLC v. MED-EL Elektromedizinische Geräte GmbH*, IPR2019-01469, Paper 6 at 8 (PTAB Feb. 13, 2020) (precedential). This framework is assessed under the *Becton, Dickinson* factors. *Becton, Dickinson & Co. v. B. Braun Melsungen AG*, IPR2017-01586, Paper 8 (PTAB Dec. 15, 2017) (precedential as to § III.C.5, first paragraph).

Under *Becton, Dickinson,* the Board considers:

> (a) the similarities and material differences between the asserted art and the prior art involved during examination; (b) the cumulative nature of the asserted art and the prior art evaluated during examination; (c) the extent to which the asserted art was evaluated during examination, including whether the prior art was the basis for rejection; (d) the extent of the overlap between the arguments made during examination and the manner in which petitioner relies on the prior art; (e) whether petitioner has pointed out sufficiently how the examiner erred in its evaluation of the asserted prior art; and (f) the extent to which additional evidence and facts presented in the petition warrant reconsideration of the prior art or arguments.

See Becton, Dickinson, Paper 8 at 17–18.

A. Petitioner does not rely on the same or substantially the same prior art and arguments

Becton, Dickinson factors (a), (b), and (d) each weigh against discretionary denial under the first part of the *Advanced Bionics* framework. Although Richardson was used by the Examiner to reject the claims of the '023 patent, the

Examiner failed to consider *any* prior art teaching USB charging via a DC-DC *boosting* technique, which is the exact feature Patent Owner argued was missing from Tinaphong in response to the Examiner's obviousness rejections. EX1002 at 477-507. In other words, in order to overcome the Examiner's obviousness rejection based on Richardson (found by the Examiner to teach every limitation except for a USB input charge circuit and connector) in combination with Tinaphong (found by the Examiner to teach the USB charge circuit and connector limitations), Patent Owner amended the claims to require the USB charge circuit "increase charge voltage." EX1002 at 478-479. Patent Owner argued Tinaphong taught the power conversion technique of ***bucking*** (i.e., decreasing) an input voltage derived from a USB power source but did not show the power conversion technique of ***boosting*** a USB input voltage. EX1002 at 477-507.

Ground 1 of this Petition, however, proposes modifying Richardson in view of Zhao, which was not before the Examiner and teaches exactly what Patent Owner argued was missing from Tinaphong—increasing a USB input voltage via a DC-DC boost converter. EX1001, [56] References Cited; EX1006, 1:25-27; 2:63-3:11. Zhao is therefore non-cumulative because it teaches the USB charging limitations missing from Tinaphong which led to allowability of the claims. Accordingly, the prior art and arguments raised in Ground 1 are "substantially different" than those raised during prosecution. *See Peloton Interactive, Inc. v.*

NEC Corporation, IPR2023-01241, Paper 17 at 14-15 (PTAB Feb. 7, 2024) (finding first part of *Advanced Bionics* not met where non-cumulative art not before the examiner taught a missing limitation for purposes of obviousness); *see also, e.g.*, *Samsung Electronics Co. Ltd. v. Headwater Research LLC*, IPR2023-01157, Paper 9 at 6-7 (PTAB Jan. 22, 2024) (same).

Similarly, Ground 2 presents an obviousness challenge based on new art and arguments that were not previously presented to the Examiner—Yu in view of Paparrizos. Yu was cited in an Information Disclosure Statement but not substantively considered by the Examiner. EX1002 at 930, 1016-1049. "The Board frequently holds that a reference that 'was neither applied against the claims nor discussed by the Examiner' does not weigh in favor of exercising the Board's discretion under § 325(d) to deny a petition." *Amazon.com, Inc. v. M2M Sols. LLC*, IPR2019-01204, Paper 14 at 16 (PTAB. Jan. 23, 2020); *see also Apotex Inc. v. UCB Biopharma SPRL*, IPR2019-00400, Paper 17 at 25 (PTAB July 15, 2019). And, like Zhao, Paparrizos was not before the Examiner and teaches precisely what Patent Owner argued was missing from the prior art of record—increasing a USB input voltage via a DC-DC boost converter. EX1009, 3:2-6, 3:31-35; 8:10-31. Accordingly, the prior art and arguments raised in Ground 2 are "substantially different" than those raised during prosecution. *See Peloton*, IPR2023-01241, Paper 17 at 14-15; *Samsung*, IPR2023-01157, Paper 9 at 6-7.

B. The patent office materially erred in allowing the claims of the '023 patent

Allowance of the challenged claims was also material error which warrants against exercise of discretion under part two of the *Advanced Bionics* framework and *Becton, Dickinson* factors (c), (e), and (f). Specifically, the withdrawal of the obviousness rejections involving Tinaphong—as well as the related discussion of Lenk in the Notice of Allowability (*see* EX1002 at 2075-2076)—demonstrate the Examiner did not sufficiently locate, evaluate, or appreciate prior art teaching boosting a USB input voltage to charge a higher voltage battery via a DC-DC converter. As discussed above, Zhao and Paparrizos—which were not before the Examiner—each differ from Tinaphong and Lenk by teaching up-converting (i.e., boosting or increasing) the USB input voltage to charge higher voltage batteries. *See Samsung*, IPR2023-01157, slip op. at 6-7 (Paper 9) (granting institution where non-cumulative art, which was not before the examiner, taught a missing limitation). And while Richardson was considered by the Examiner, the Board found Richardson anticipates claims with similar limitations from the parent '015 patent in IPR2020-00944 (including all limitations of the challenged independent claims of the '023 patent aside from the USB limitations), which has now been affirmed by the Federal Circuit. EX1014 at 49-67; EX1015.

The Examiner was also not presented with the substantial evidence accompanying this Petition which demonstrates the known desirability and predictability of boosting a USB input voltage to charge a higher voltage battery pack via a DC-DC boost converter, and did not substantively address similar evidence that would render Petitioner's evidence cumulative. For example, evidence of motivation to combine and reasonable expectation of success relied upon herein—specifically Zhou (EX1016), Amemiya (EX1017), CN 202512152 U (EX1018; EX1019), CN 201226449Y (EX1020; EX1021), CN 203788026 U (EX1022; EX1023), the expert declaration of Mr. MacCarley, and the deposition of Mr. Bryan Legates (EX1026)—were not of record during prosecution. EX1001, [56] References Cited.

Finally, with respect to Yu, there is no evidence in the prosecution history of the extent to which the Examiner considered Yu, that the Examiner applied the references against the claims, or that the Examiner considered the particular disclosures of the references presented in a petition. *See, e.g.*, *Vizio, Inc. v. Nichia Corp*., IPR2017-00551, Paper 9 at 7–8 (PTAB July 7, 2017). Indeed, Yu was among over 400 references before the Examiner during prosecution and appears to have been overlooked by the Examiner. EX1002 at 930; *see, e.g.*, *Samsung Electronics Co. Ltd. v. Headwater Research LLC*, IPR2023-01157, Paper 9 at 7-8 (PTAB Jan. 22, 2024) (finding material error under part two of *Advanced Bionics*

framework because references were among 1800 cited in information disclosure statements); *see also, e.g.*, *Hum Industrial Technology, Inc. v. Amsted Rail Company, Inc.*, IPR2023-00540, Paper 10 at 44-45 (PTAB Aug. 11, 2023) (finding examiner did not sufficiently evaluate or appreciate a reference where it was listed with "almost 37" references in an IDS and not used in a rejection).

Accordingly, Petitioner respectfully submits the Board should decline to exercise discretionary denial under § 325(d).

IX. DISCRETION UNDER § 314(a)

The Office's June 21, 2022 Memorandum[3] ("Guidance Memo") states "[t]he plain language of the *Fintiv* factors is directed to district court litigation and does not apply to parallel U.S. International Trade Commission (ITC) proceedings, as the ITC lacks authority to invalidate a patent and the ITC's invalidity rulings are not binding on the Office or on district courts." Guidance Memo at 2-3. Accordingly, the ITC Action does not provide a basis for discretionary denial under 35 U.S.C. § 314(a).

Additionally, the Guidance Memo states "the PTAB will not discretionarily deny institution of an IPR or PGR in view of parallel district court litigation where

[3] *Interim Procedure for Discretionary Denials in AIA Post-Grant Proceedings with Parallel District Court Litigation*, available at www.uspto.gov/sites/default/files/documents/interim_proc_discretionary_denials_aia_parallel_district_court_litigation_memo_20220621_.pdf.

a petitioner stipulates not to pursue in a parallel district court proceeding the same grounds as in the petition or any grounds that could have reasonably been raised in the petition." Guidance Memo at 7. In accordance with this guidance, ADC has offered Patent Owner a stipulation that, if IPR is instituted, it will not pursue in the District Court Litigation any ground raised or that could have been reasonably raised in this Petition with respect to claims 1, 32, 38, 39, 47, 52, and 54 of the '023 patent. EX1028.

X. GROUNDS FOR UNPATENTABILITY

Petitioner requests cancellation of the challenged claims on the following Grounds:

A. Ground 1: Claims 1, 32, 38, 39, 47, 52, and 54 are unpatentable under 35 U.S.C. § 103(a) over Richardson in view of Zhao

1. Overview of the Combination

A PHOSITA would have found it obvious to combine the teachings of Richardson and Zhao. Both references relate to systems utilizing a multicell battery pack, and a PHOSITA would have been motivated to modify Richardson in view of Zhao to include a USB charging input and circuit to achieve the predictable result of effectively charging the batteries of Richardson's jump starter. EX1003, ¶ 64.

Specifically, Richardson teaches a battery-powered device having a pack of series-connected batteries. *See* EX1005, FIG 2A (depicting "batteries 23");

EX1003, ¶ 65. As one example, Richardson discloses each battery as a "12-volt batter[y]." EX1005, [0034]. To reach a 12V rating, a PHOSITA would understand Richardson's batteries require multiple cells connected in series, such as a series of lithium-ion cells or a series of lead-acid cells. EX1003, ¶ 65. Zhao discloses a system for charging battery-powered devices that have a multicell pack of series-connected battery cells. EX1006, 2:63-3:11. Zhao specifically contemplates that its battery charging system can use low voltage charging systems like 5V USB to charge batteries with a voltage rating above that of the input voltage received from the USB power source. EX1006, 1:22-27; 2:51-54; 3:6-11.

A PHOSITA therefore would have been motivated to modify Richardson in view of Zhao because Zhao is directed to the known technique of charging a multicell battery pack of series-connected cells of a battery-powered device—which is the same battery architecture in Richardson's jump starter—by using a DC-DC booster converter in accordance with its established function of converting a lower voltage input to a higher voltage output. EX1003, ¶ 66. Additionally, Zhao specifically teaches the desirable feature of charging a pack rated above 5V with a 5V USB input, which is a known technique that a PHOSITA would have been motivated to implement in a predictable manner to charge 12V batteries such as those disclosed by Richardson. *Id*.

Additionally, a PHOSITA would have been motivated to combine the particular teachings of Richardson and Zhao with a reasonable expectation of success for the reasons discussed in further detail below with respect to each challenged claim. EX1003, ¶ 67.

2. Independent Claim 1

a. Preamble[4]

Richardson discloses a jump starting apparatus. EX1005, Abstract; *see also id.* at claim 26. Specifically, Richardson's apparatus provides supplemental power and jump starts vehicle batteries. *See, e.g.*, EX1005, ¶¶ [0002], [0006]-[0007]. Richardson describes "[j]ump starter 10" which includes "microprocessor 12" to control the system, thereby allowing the jump starter to boost or charge a battery by connecting the internal batteries of the jump starter to the positive and negative terminals of a vehicle battery. *See* EX1005, ¶¶ [0007], [0014], [0016], [0021], [0035]; *id.* at FIG. 1, FIG. 2C, FIGS. 3-8; *see also id.* at ¶ [0004] ; EX1003, ¶ 68.

The Board made similar factual findings regarding Richardson in the '015-FWD, which was affirmed on appeal. EX1014 at 50; EX1015 at 2; EX1003, ¶ 69.

b. Limitation 1(a)

Richardson teaches its jump starting apparatus has "one or more batteries."

[4] Because Petitioner includes the full claim language of the '023 patent in the Listing of Challenged Claims, Petitioner does not reproduce the full claim language here. The Board is encouraged to reference the Listing of Challenged Claims at p. x to see the full claim language.

EX1005, Abstract; *see also id.* at ¶ [0007], claim 1. "Jump starter batteries 22" supply power to jump start a vehicle's battery. *See* EX1005, ¶¶ [0016], [0021], [0035]. This is further shown by Figures 1 and 2A, annotated below to indicate the batteries which operate as a power supply. EX1005, Figs. 1 and 2A (annotated).

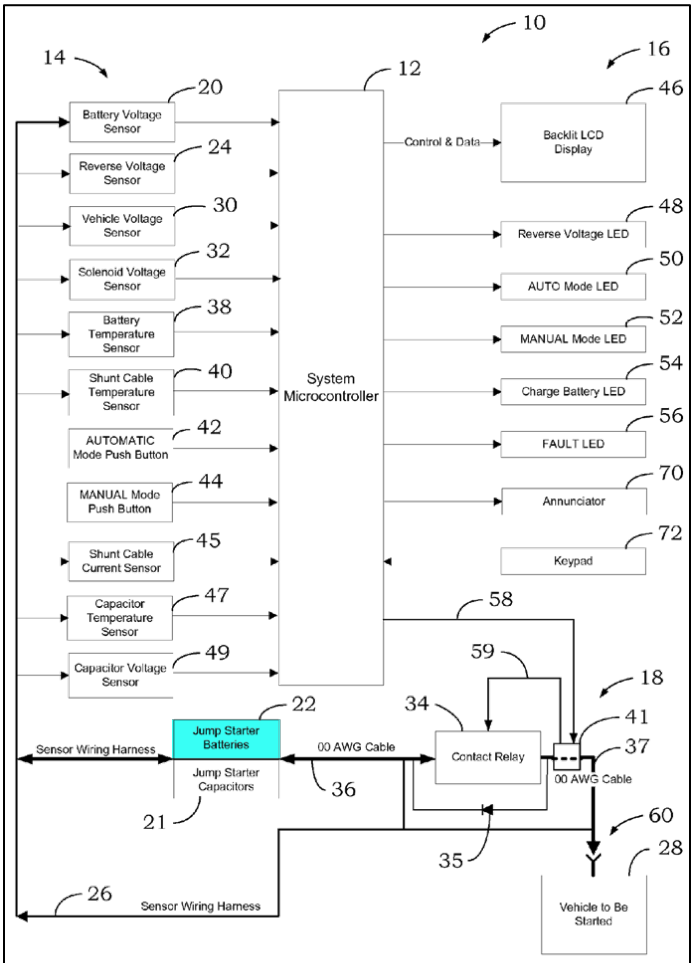

Fig. 1

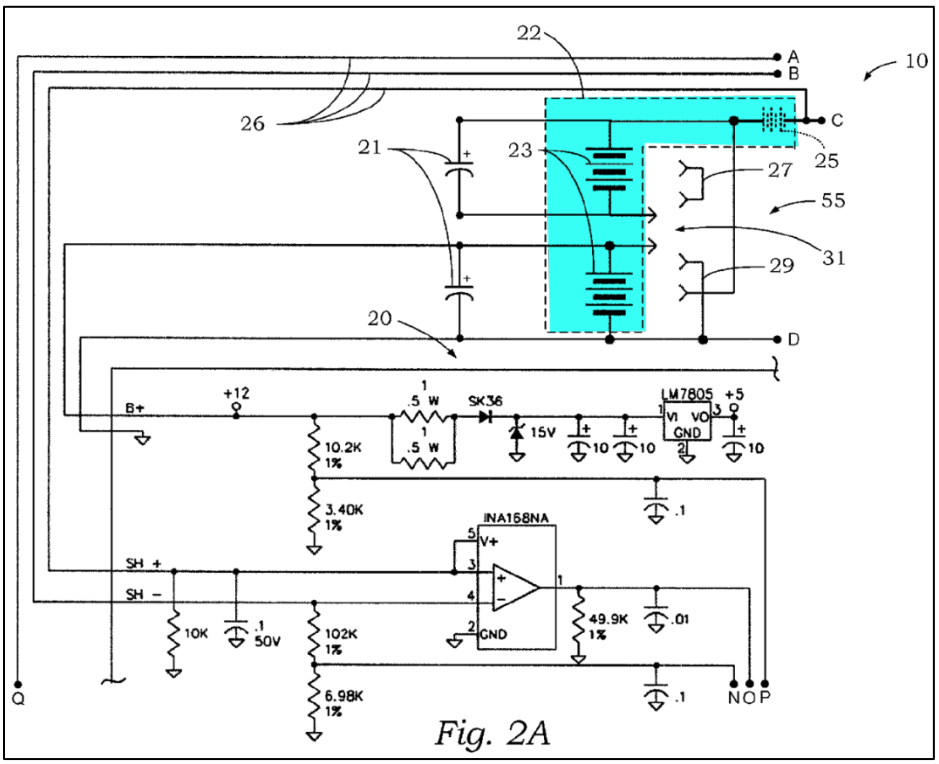

Fig. 2A

EX1003, ¶ 70.

The Board made similar factual findings regarding Richardson in the '015-FWD, which was affirmed on appeal. *See* EX1014 at 50-51; EX1015 at 2; EX1003, ¶ 71.

c. Limitation 1(b)

Richardson discloses a "pair of conductive leads" which include a positive polarity terminal connector as claimed. EX1005, Abstract; *see also* EX1005, claim 26; EX1003, ¶ 72. Richardson's terminal connectors "may include conductive clamps" or other types of connectors. EX1005, ¶ [0016]. For example, "jumper cables 60" include the conventionally-colored red cable clamp for connecting the

positive cable to the positive battery terminal. *See* EX1005, ¶ [0027]; EX1003, ¶ 72; *see also* EX1005, FIG. 2C (annotated).

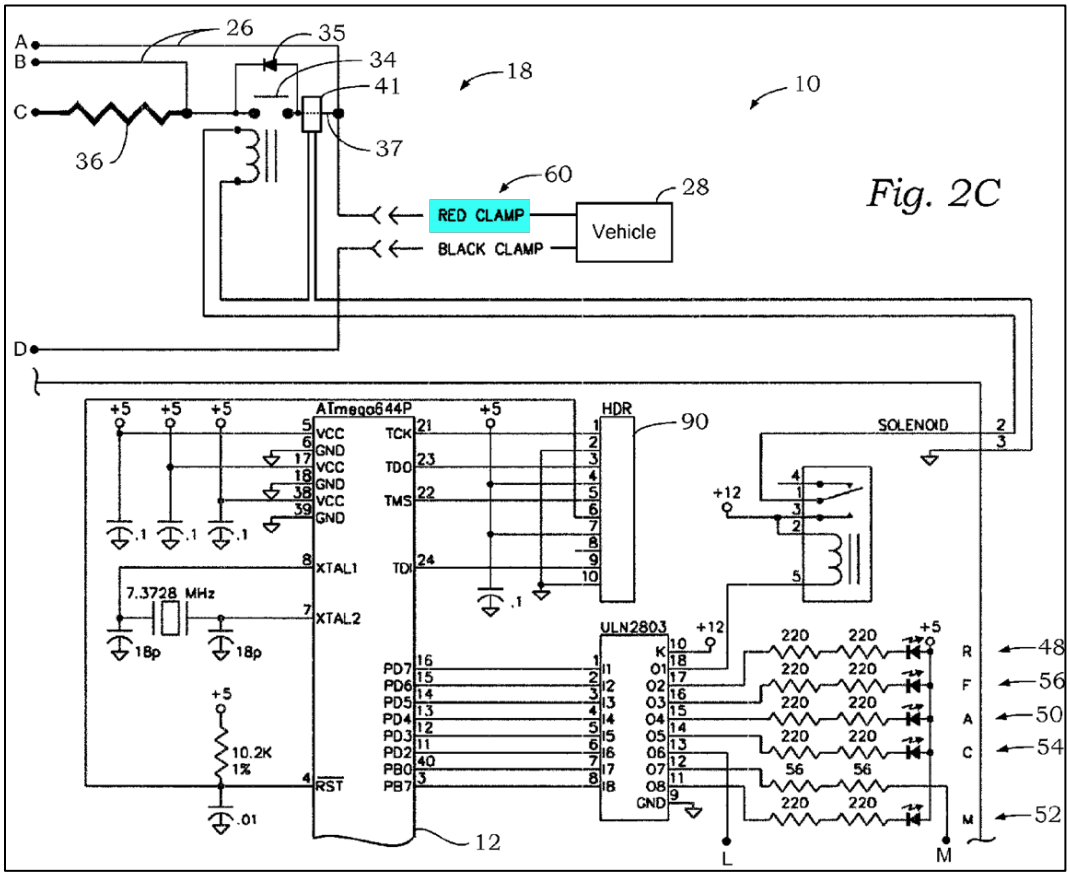

A PHOSITA would further understand Richardson discloses a positive polarity terminal connector as claimed as the cables are disclosed with different polarities. EX1005, ¶¶ [0016]; [0027]-[0028]. A PHOSITA would thus understand one of the two clamps of the jumper cables would be the positive clamp of the positive polarity cable. EX1003, ¶ 73.

d. Limitation 1(c)

Richardson's conductive leads (*see* Limitation 1(b), *supra*) also include a negative polarity battery terminal connector as claimed. EX1005, Abstract; *see also* EX1005, claim 26; EX1003, ¶ 74. Richardson's terminal connectors "may include conductive clamps" or other types of connectors. EX1005, ¶ [0016]. For example, "jumper cables 60" include the conventionally-colored black cable clamp for connecting the negative cable to the negative battery terminal. *See* EX1005, ¶ [0027]; EX1003, ¶ 74; *see also* EX1005, FIG. 2C (annotated).

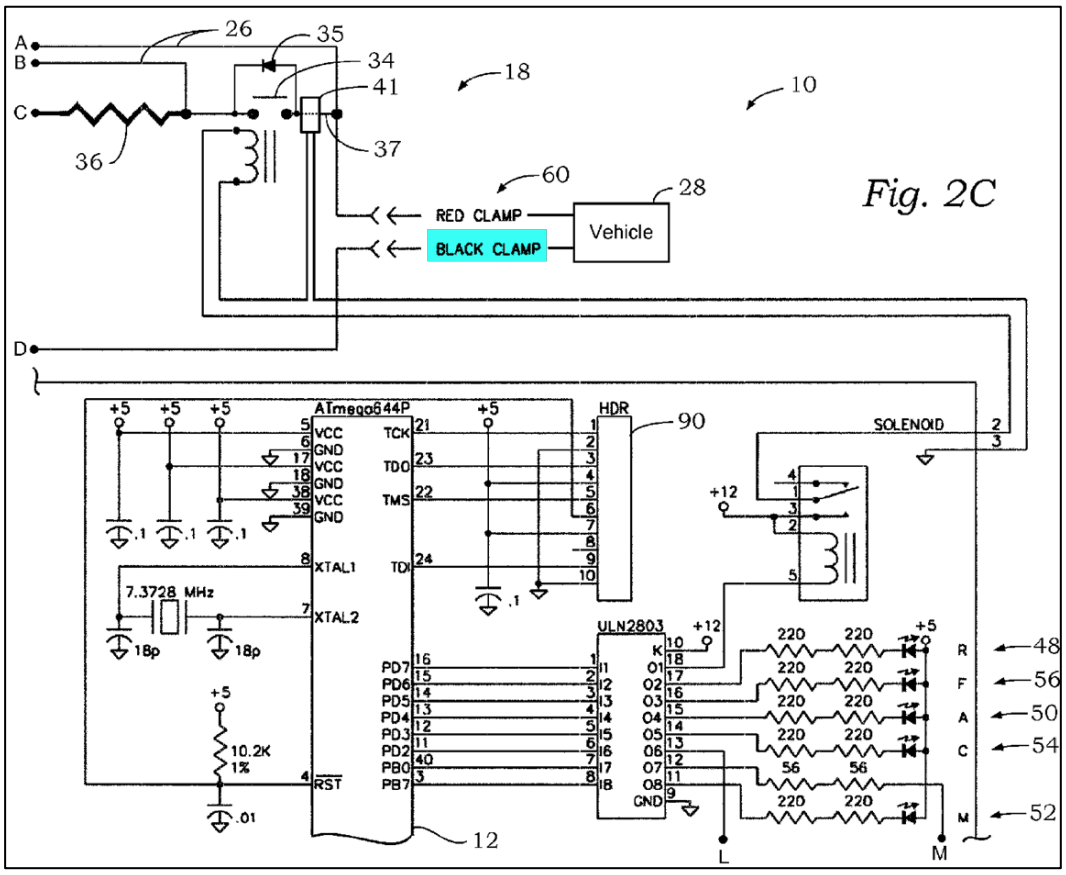

A PHOSITA would further understand Richardson discloses a positive polarity terminal connector as claimed as the cables are disclosed with different polarities. EX1005, ¶¶ [0016]; [0027]-[0028]. A PHOSITA would thus understand one of the two clamps of the jumper cables would be the negative clamp of the negative polarity cable. EX1003, ¶ 75.

e. Limitation 1(d)

Richardson discloses "contact relay 34" which functions as a power switch or circuit configured to turn on power as claimed. For example, when a jump start is initiated, contact relay 34 is closed to connect the jump starter's batteries to the vehicle battery, thereby transferring power for a jump start. *See* EX1005, ¶¶ [0021], [0035]-[0036], [0054]; *see also* EX1005, FIG. 1 (annotated).

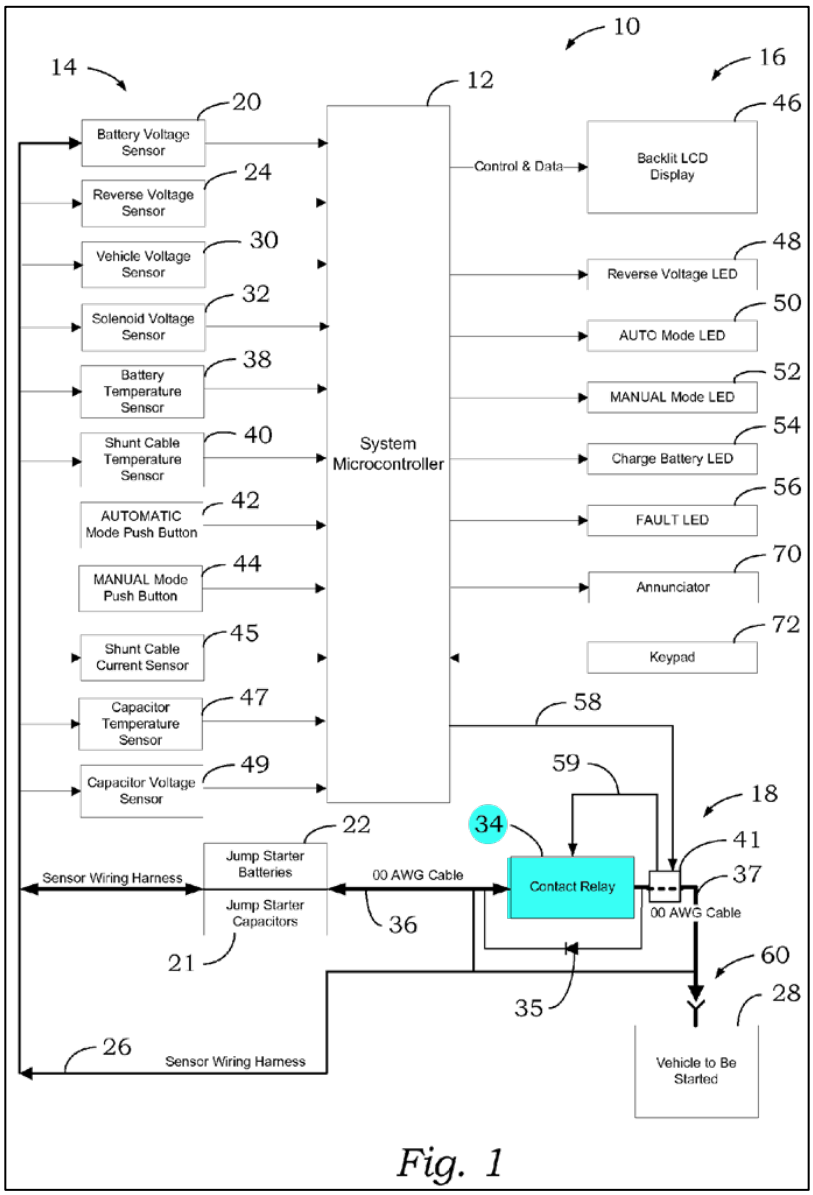

Fig. 1

EX1003, ¶ 76.

Richardson similarly discloses a jump starter with "a relay connected to said conductive leads" and "a processor for controlling said relay to selectively apply electrical power from said jump starter batteries and said jump starter capacitors to said electrical system of the engine." EX1005, claim 26. Richardson's flow charts

of the processing steps further demonstrate the relay operates as a power switch as claimed. *See, e.g.*, EX1005, FIG. 6 (Step 268: "Close Starter Contact Relay") ; EX1003, ¶ 77.

The Board made similar factual findings regarding Richardson in the '015-FWD, which was affirmed on appeal. *See* EX1014 at 54-55; EX1015 at 2; EX1003, ¶ 78.

f. Limitation 1(e)

Richardson discloses a control system or circuit connected to and controlling contact relay 34. Specifically, the system comprised of microprocessor[5] 12 and associated sensors or circuitry constitutes the control system or circuit as claimed. EX1005, FIG. 1 (annotated).

[5] Richardson also refers to "microprocessor 12" as "microcontroller 12." *See, e.g.*, EX1005, ¶ [0018], FIG. 1.

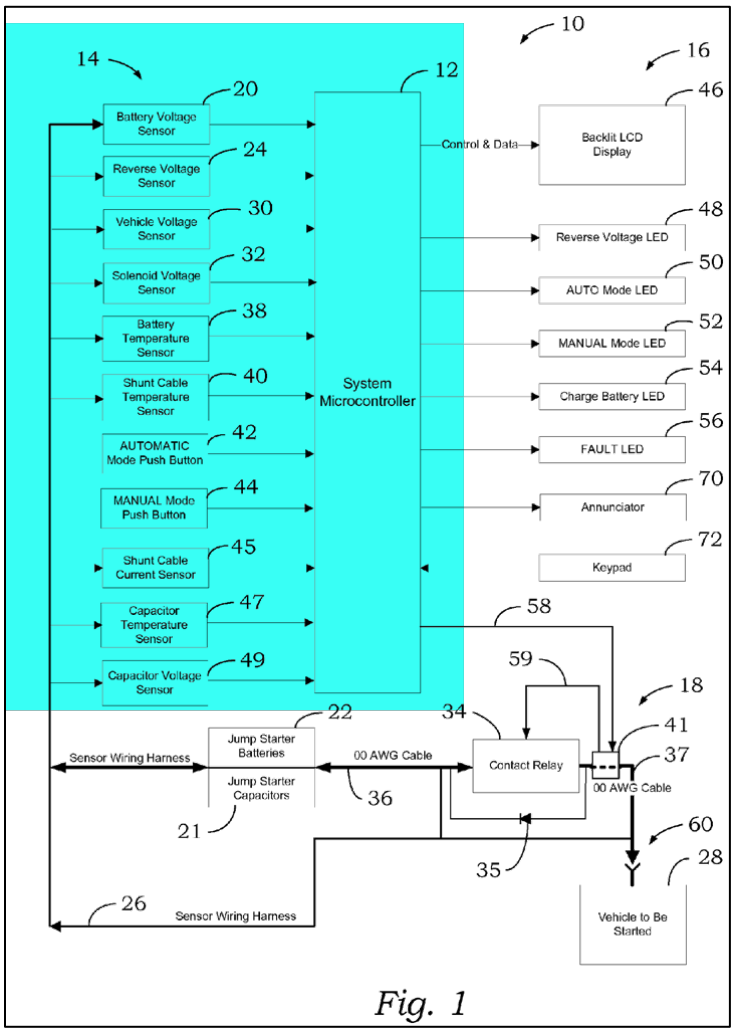

Fig. 1

EX1003, ¶ 79.

For example, Richardson's jump starter has a processor for controlling the relay to selectively apply electrical power to the engine electrical system. EX1005, Abstract; ¶¶ [0018], [0036], claim 26. This microprocessor produces outputs which control the jump start function. EX1005, ¶¶ [0014], [0020], Fig. 2A, Fig. 2B, Fig. 2C. This control system utilizes "reverse voltage sensor 24" to detect whether the battery terminal connectors are connected to a vehicle battery with proper polarity

(or reverse polarity, or correct or incorrect polarity) prior to controlling contact relay 34 to connect power to the vehicle battery. EX1005, ¶¶ [0016], [0020], FIG. 1 (annotated); EX1003, ¶ 80.

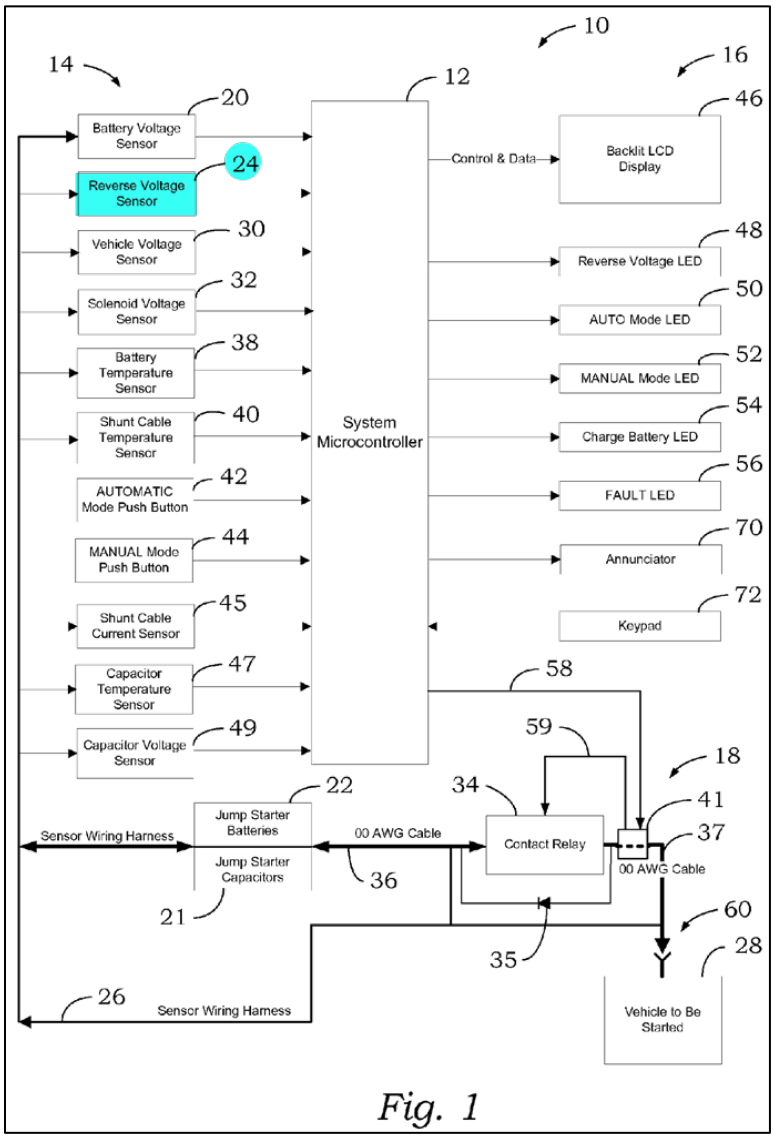

Fig. 1

Richardson further explains "once jumper cables 60 have been manually connected to the vehicle to be started 28, the voltage is measured by the reverse voltage sensor 24 to determine if the cables have been properly connected to the

vehicle 214." EX1005, ¶ [0027]. Specifically, "[i]f the voltage measured is significantly less than the voltage of the jump starter capacitors 21 and batteries 22, then a reverse polarity connection of the jumper cables to the vehicle is determined and an error flag is set and the even saved in non-volatile memory 216." *Id.* Accordingly, "[a]ny further jump starter action by the operator is ignored until the reverse polarity condition is corrected 220, at which point processing returns to the start of the main processing loop 210." *Id.* Richardson further discloses an exemplary implementation of a reverse voltage sensor in Figure 2B. EX1005, FIG. 2B; EX1003, ¶ 81. Even Patent Owner admitted "***Richardson*** discloses detecting proper polarity" during prosecution. *See* EX1002 at 496 (emphasis in original); EX1003, ¶ 82.

The Board made similar factual findings regarding Richardson in the '015-FWD, which was affirmed on appeal. EX1014 at 51-67; EX1015 at 2; EX1003, ¶ 83.

g. Limitation 1(f)

Richardson teaches its system includes various features related to charging the jump starter batteries, such as circuitry for detecting a charger voltage and monitoring battery voltage to determine when the charging process is complete. *See* EX1005, ¶ [0029]; *see also* EX1005, ¶ [0020] (discussing charging of the batteries), ¶ [0028] (similar) ; EX1003, ¶ 84.

While Richardson does not teach the jump starter's charging circuitry utilizes USB technology, Zhao teaches USB input circuits configured for converting power from a USB power source (such as one providing a 5V input) to increase power voltage to the power supply were well-known for portable battery-powered devices that require charging a multicell battery pack with a voltage rating above the voltage received from the power source. *See* EX1006, Abstract, 1:22-23, 1:25-27, 3:6-11; EX1003, ¶ 85. Zhao teaches a "step-up topology" (*i.e.* a power conversion technique using a DC-DC conversion to boost an input voltage to a higher output voltage) used to charge a multicell battery pack using a lower input voltage, such as a 5V USB power source. EX1006, 1:22-23, 1:25-27; *see also id.* at Abstract ("In one embodiment, a battery charger can include: (i) a step-up converter configured to generate an output signal by boosting a DC input voltage, where a threshold voltage is greater than the DC input voltage[.]"), 1:34-45, 1:46-55, 2:51-62, 2:63-3:11; EX1003, ¶ 86.

Specifically, Zhao teaches a "step-up battery charger or charging management system 100" which constitutes a USB input circuit as claimed. EX1006, 2:63-66, FIG. 1, 3:1-39. This system "can include a step-up converter and charging control circuit 201." EX1006, 2:66-67. The step-up converter is a well-known DC-DC converter configured as a boost converter, which boosts (i.e., increases) an input voltage to a higher-voltage output that "can charge a plurality

of series connected (e.g., lithium) batteries[.]" EX1006, 3:1-11. In other words, Zhao's system employs a power conversion technique that allows use of a 5V USB power source to charge multiple series-connected cells (such as lithium-ion cells). EX1003, ¶¶ 85-86.

Zhao further discloses "power stage circuit 101 of the step-up converter can be a synchronous rectifier Boost topology including inductor L, main switch S_1, synchronous switch S_2, and output capacitor C_{BD}." EX1006, 3:12-15. Control circuit 102 can control main switch S_1 via control signal G_1 and synchronous switch S_2 via control signal G_2. EX1006, 3:17-21. An output of power stage circuit 101 can connect to charging control circuit 201 and can then be regulated or controlled for purposes of charging the battery or battery-powered device. EX1006, 3:3-6, 3:25-26. In certain situations, "the battery device can be directly charged by the output signal from the step-up converter." EX1006, 8:21-24. Accordingly, a PHOSITA would understand how to connect the boosted output voltage of Zhao's step-up charging system to a battery pack for purposes of charging the battery. EX1003, ¶ 87.

A PHOSITA would understand Zhao's system is suitable for use with a variety of pack configurations and battery chemistries, such as a 3S pack of lithium-ion cells rated at 11.1V or a 4S pack of lithium-ion cells rated at 14.8V (both of which would be well-suited for starting a traditional lead-acid vehicle

starter battery rated at 12V). *See, e.g.*, EX1006, 3:6-11. Thus, the disclosure of Zhao provides an explicit teaching, suggestion, or motivation to implement Zhao's USB input circuit with a system like Richardson's jump starter. *See id*. A PHOSITA would have been motivated to modify the design of Richardson's jump starter to either (1) replace the existing charging circuitry with Zhao's step-up charging system and connect the output to Richardson's jump starter batteries, or (2) add Zhao's step-up charging system and connect the output to Richardson's jump starter batteries as an additional and alternatively pathway for charging the jump starter batteries. EX1003, ¶ 88. Either option would have provided desirable features or improvements to Richardson's jump starter. For example, although option 1 may result in longer charging times, it allows the supplier to avoid the need to supply a proprietary charger or other type of AC "power brick" that would be less ubiquitous or less standardized than a USB charger. *Id*. On the other hand, while option 2 would result in a slight increase in cost for including an additional input connector and DC-DC conversion circuitry in Richardson's jump starter, the desirable benefits would include increased flexibility so that the jump starter batteries could be charged via a traditional AC power brick when available, but alternatively by a USB charger if the AC power brick is lost, damaged, or the user is otherwise in a location where only USB power is readily available. *Id*. Both

options cater to perceived or actual consumer demand for USB technology as well as the other benefits and desirable features of USB charging discussed herein. *Id*.

In addition to explicit teachings of Zhao, the desirability of utilizing USB technology to charge battery-powered devices was well-known before the claimed priority date. For example, in 2007 the Universal Serial Bus Implementers Forum ("USB-IF") issued its Battery Charging Specification, Revision 1.0 which noted the "convenience" of USB charging "has led to the creation of dedicated chargers that simply expose a downstream USB port." EX1025 at 6; EX1024, ¶¶ 1-4, 8. Among other desirable features, USB-IF noted what was well-known to a PHOSITA: USB charging allows the "same USB cable" to be used for charging devices from multiple different USB charging sources such as a PC or a dedicated charger. *See id.* Relatedly, a PHOSITA would understand desired benefits of USB technology before the claimed priority date include at least the following: (1) reducing the need for suppliers to ship product with proprietary chargers (thus reducing cost of goods and avoiding electronic waste), (2) providing device users with the desired result of reducing their need to possess or carry multiple proprietary chargers and cables for their battery-powered devices (*e.g.* the goal of universal compatibility), (3) ease of use, and (4) durability. *See, e.g.*, EX1016 (US 2013/0285596 A1), ¶ [0002] ("In order to achieve the greatest user convenience,

modern mobile devices should support five volt and universal series bus (USB) charging."); EX1003, ¶ 89.

The desirability of using a USB input to recharge batteries at the voltage level of those found in jump starters is also documented in the prior art, further corroborating a PHOSITA's motivation and understanding of the desirability of USB. For example, USB charging ports had become standard equipment in many cars and trucks before the '023 patent's claimed priority date, which is one location where a jump starter for a vehicle would be stored and charged. EX1029; EX1030; EX1003, ¶ 90. As another example, the Paparrizos reference states the following:

> The USB specification has become very popular and consumers have become used to being able to charge their USB devices from universal USB power sources. Consumers are used to USB, mini-USB, and micro-USB connectors being present in portable electronics and their use for battery charging from a USB power source.

EX1009, 1:18-23. The '023 patent is explicit the USB connectors, chargers, and cables were "standard" before the claimed priority date. *See* EX1001, 7:21-25. As another example, as early as ***2001*** component suppliers such as Linear Technologies had developed and marketed integrated circuits for the specific application of boosting a 5V USB input to charge higher voltage batteries. EX1027 at 26-28; EX1026, 28:14-31:13; 32:22-38:24; 42:23-43:22; 44:2-19; 51:14-54:13; 54:25-56:14. More specifically, Linear Technologies (among other IC and ASCI manufacturers) had provided integrated circuits that enabled USB charging for

higher voltage batteries from a 5V USB source, as further explained by Mr. Bryan Legates in deposition in the ITC Action. *See* EX1026, 53:2-18; EX1003, ¶ 90.

Similar to the USB charging applications achieved by customers of Linear Technologies before the claimed priority date, the use of DC-DC converters to boost a USB input voltage to charge a battery with a nominal voltage rating above the USB input voltage was both desirable and known to be interchangeable with non-USB charging systems. EX1003, ¶ 91. Again, this type of application was known to a PHOSITA and is well-documented in prior art, such as the following:

- CN 202512152 U—a Chinese utility model patent published and issued in 2012—discloses a digital multimeter device with a 9V internal battery that can be charged from the 5V input from a USB power supply via DC-DC boosting circuit. *See, e.g.*, EX1018; EX1019, Abstract, ¶¶ [0004]-[0005], Fig. 1, Fig. 2; EX1003, ¶ 91.
- CN 201226449Y—a Chinese utility model published and issued in 2009—discloses "a booster type charging control circuit is widely used" in applications where the 5V from a USB charging source cannot meet the charging needs of an electronic device. *See, e.g.*, EX1020; EX1021 at 4 ("Background art") ; EX1003, ¶ 91.
- U.S. Patent Publication No. 2013/0285596 ("Zhou")—which was filed April 30, 2012—discloses circuits with components that can "increase (e.g., step-

up) the voltage received from a battery charger via the USB 104 (e.g., about 5V) to the voltage required to charge the battery 110 (e.g., about 10V to 24V). *See, e.g.*, EX1016, ¶ [0011] ; EX1003, ¶ 91.

- U.S. Patent No. 9,035,599 ("Amemiya")—which was filed May 20, 2013—discloses a charging circuit where "the input power supply is a USB power supply and the input voltage Vin is about 5 volts" and the battery to be charged "is a two-cell lithium-ion secondary battery and the full charge voltage thereof is 8.4 volts." *See, e.g.*, EX1017, 2:48-59; EX1003, ¶ 91.

Lastly, Chinese utility model patent CN 203788026 U—which was filed April 18, 2014 —explicitly contemplates USB charging the batteries of a jump starter via a DC-DC boosting technique. *See, e.g.*, EX1022; EX1023, Abstract, claim 1, ¶¶ [0003]-[0009], [0013], [0016]-[0017], Fig. 1; EX1003, ¶ 91. While this utility model does not qualify as prior art under 35 U.S.C. § 102, it predates the claimed priority date and thus remains powerful evidence demonstrating, before the '023 patent's claimed priority date, a PHOSITA would have recognized and understood the nature of the same problem to which the challenged claims are directed, along with proposed solutions. *See, e.g.*, *Cross Med. Prod., Inc. v. Medtronic Sofamor Danek, Inc.*, 424 F.3d 1293, 1322-23 (Fed. Cir. 2005).

In sum, before the claimed priority date, USB charging for higher voltage batteries was a predictable technique to achieve the desirable feature of USB

charging for type of higher voltage devices like Richardson's jump starter. EX1003, ¶¶ 92-93.

Therefore, Richardson and Zhao render this limitation obvious.

h. Limitation 1(g)

Richardson is not explicit regarding the type of input connector utilized for charging the jump starter batteries. *See, e.g.*, EX1005, ¶ [0029]. However, as noted in connection with Limitation 1(f) above, a PHOSITA would have been familiar with the relevant USB standards and been motivated to implement USB technology when designing a portable battery-powered device. Thus, when modifying Richardson to implement a USB input circuit as taught by Zhao, a PHOSITA would have necessarily relied upon their knowledge regarding implementation of commercially-available USB receptables (such as a micro-USB receptable) when designing a USB charging feature. In conjunction with Zhao's teaching that the input voltage of the system is provided by a "universal serial bus (USB) charger" (EX1006, 3:6-11), a PHOSITA would have known Zhao's system implements a design requiring the remaining portions of a USB charging system, especially a USB-compliant receptacle (such as a micro-USB connector). A PHOSITA's knowledge of these USB input connectors—which the '023 patent admits are "standard" (*see* EX1001, 7:23-25)—is further corroborated by the USB standards and other prior art discussing these standard connectors. *See, e.g.*,

EX1009, 1:20-23 (discussing USB, mini-USB, and micro-USB connectors); EX1018; EX1019, ¶ [0004] (discussing "Mini-USB interface"). This USB receptable (which is a USB input connector as claimed) can receive the corresponding plug of a USB cable of a USB charger, thereby enabling the receipt and transmission of the power input from the USB power source to the USB input circuit and ultimately the jump starter's batteries. EX1003, ¶¶ 94-95.

Therefore, Richardson and Zhao render this limitation obvious.

3. Claim 32

Zhao explicitly teaches a step-up converter that is controlled by control circuitry such as a microprocessor. Specifically, control circuit 102 can output control signal G_1 to control the ON/OFF state of switch S_2, which in turn will either turn the step-up converter ON or OFF. EX1006, 3:17-19; EX1003, ¶ 96. For example, step-up converter control circuit 102 can turn off switch S_2 to complete the charging procedure. EX1006, 4:59-64. Accordingly, Zhao teaches a system with a step-up converter that can be turned on and off by a microprocessor. EX1003, ¶ 96.

A PHOSITA would understand one desirable, effective, reliable, and cost-effective choice for implementing control circuit 102 would be through the use of a microcontroller, and PHOSITA would have been motivated to implement this feature of Zhao in the USB charging circuitry combined with Richardson as

discussed above in connection with Limitation 1(f). EX1003, ¶ 97. For example, microprocessor control of the ON/OFF state of the step-up converter allows the device to save power by disabling the DC-DC boosting circuitry when charging is terminated EX1003, ¶ 97. A PHOSITA would have a reasonable expectation of success in implementing this feature as signal control of switches is a basic and predictable technique.

Richardson, in view of Zhao, therefore renders obvious every element of claim 32. EX1003, ¶ 98.

4. Independent Claim 38

a. Preamble

See Section X.A.2.a; EX1003, ¶ 99.

b. Limitation 38(a)

See Section X.A.2.b; EX1003, ¶ 100.

c. Limitation 38(b)

See Section X.A.2.c; EX1003, ¶ 101.

d. Limitation 38(c)

See Section X.A.2.d; EX1003, ¶ 102.

e. Limitation 38(d)

Richardson discloses a control system which includes a battery presence sensor or circuit as claimed. EX1005, ¶¶ [0007], [0027], [0034], [0041], Fig. 3, Fig. 4, Fig. 5, Fig. 6. Specifically, Richardson's control system can use vehicle

voltage sensor 30 to monitor voltage received from the vehicle system on line 37. EX1005, ¶ [0016]. Richardson's battery presence sensor is separate from its reverse polarity sensor or circuit. EX1005, Fig. 1, Fig. 3, ¶ [0027]. Richardson explains the disclosed invention monitors the voltage of the battery of the vehicle to be jump started and the current delivered by the jump starter batteries and capacitors to determine if a proper connection has been established and to provide fault monitoring. EX1005, ¶ [0007]. Richardson further explains the voltage is monitored to determine open circuit, disconnected conductive clamps, shunt cable fault, and solenoid fault conditions. EX1005, ¶ [0007] ; EX1003, ¶ 103.

Richardson's vehicle voltage sensor 30 allows the jump starter to determine the plugged or unplugged status of the jumper cables, indicating whether a vehicle battery is present (*i.e.*, connected to the jump starter) or absent (*i.e.*, disconnected). Richardson, ¶ [0041] ("If the system detects an increase in the difference between the measured jump starter battery voltage 20 and the voltage measured 30 across the contact relay 34 indicating that one of the jump starter cables has been disconnected 302 from the vehicle's battery or starter system 28 then a jumper cable unplugged error count is incremented 304, a "Jumper Cable Unplugged" error message is displayed 306 on the LCD 46, the contact relay 34 is opened and the fault LED 56 is illuminated 290. The system may be returned to the ready

mode if the Automatic button 42 is pressed by the operator 292, or automatically after five minutes 294.") ; EX1003, ¶ 104.

An exemplary implementation of circuitry for detecting the presence of a vehicle battery is shown in Richardson's figures. EX1005, Fig. 2A, Fig. 2B, Fig. 2C, Fig. 2D. Specifically, Richardson discloses the following connections: (1) the positive polarity battery terminal connector (RED CLAMP) connects to node A (shown in FIG. 2C), (2) node A connects to node Q (shown in FIG. 2A), (3) node Q is connected to the top node of a series-connected voltage divider (shown in FIG. 2B and labeled as vehicle voltage sensor 30), and (4) the node between the two resistors of the voltage divider is connected to node I and ultimately to pin 31 of the microprocessor 12 (as shown in FIG. 2D). EX1005, Figs. 2A, 2B, 2C, 2D. Richardson further discloses "i[f] one of the push buttons 42 or 44 has been selected, the system will compare the operator-configured starter voltage against the voltage of the vehicle to be started 28" and "[i]f the different between the voltage selected and the voltage measured is not within a predetermined range and tolerance 252, a "Wrong Selector Volts" message is displayed 254 on the LCD 46 and further operation is prohibited until the correct voltage is selected 256 at which point processing returns to the main processing loop 210." EX1005, ¶ [0034] ; EX1003, ¶ 104. Based on the component values disclosed in Figures 2A-2C, a low voltage reading of approximately 0.032 volts will be received at pin 31 of the

microcontroller when no battery is detected, and a higher voltage of approximately 0.7 volts is received at pin 31 when a 12-volt battery is connected. EX1005, Figs. 2A-2C. Accordingly, in at least one exemplary implementation, the Richardson device makes a determination of battery presence at step 252 of the processing loop in connection with the operation of vehicle voltage sensor 30. EX1005, Fig. 5. ; EX1003, ¶ 104.

The Board made similar findings regarding Richardson in the '015-FWD, which was affirmed on appeal. EX1014 at 51-67; EX1015 at 2; EX1003, ¶ 105.

f. Limitation 38(e)

See Section X.A.2.f; EX1003, ¶ 106.

g. Limitation 38(f)

See Section X.A.2.e; EX1003, ¶ 107.

h. Limitation 38(g)

See Sections X.A.2.e and X.A.2.f; EX1003, ¶ 108. To the extent Patent Owner argues this Limitation requires separate or distinct signals from a battery presence sensor and a reverse polarity sensor (or otherwise requires separate or distinct signals indicating battery presence and polarity), Richardson discloses separate signals and separate sensors for detecting battery presence and polarity. EX1005, Fig. 1, Fig. 3, ¶ [0027] ; EX1003, ¶ 109.

The Board made similar findings regarding Richardson in the '015-FWD, which was affirmed on appeal. EX1014 at 51-67; EX1015 at 2; EX1003, ¶ 110.

i. Limitation 38(h)

See Section X.A.2.g; EX1003, ¶ 111.

j. Limitation 38(i)

See Section X.A.2.h; EX1003, ¶ 112.

5. Independent Claim 39

a. Preamble

See Section X.A.2.a; EX1003, ¶ 113.

b. Limitation 39(a)

See Section X.A.2.b; EX1003, ¶ 114.

c. Limitation 39(b)

See Section X.A.2.c; EX1003, ¶ 115.

d. Limitation 39(c)

See Section X.A.2.d; EX1003, ¶ 116.

e. Limitation 39(d)

See Section X.A.2.e; EX1003, ¶ 117.

f. Limitation 39(e)

See Section X.A.2.f; EX1003, ¶ 118.

g. Limitation 39(f)

See Sections X.A.2.f, X.A.4.e, X.A.4.h; EX1003, ¶ 119.

h. Limitation 39(g)

See Section X.A.2.g; EX1003, ¶ 120.

i. Limitation 39(h)

See Section X.A.2.h; EX1003, ¶ 121.

6. Independent Claim 47

a. Preamble

See Section X.A.2.a; EX1003, ¶ 122.

b. Limitation 47(a)

See Section X.A.2.b; EX1003, ¶ 123.

c. Limitation 47(b)

See Section X.A.2.c; EX1003, ¶ 124.

d. Limitation 47(c)

See Section X.A.2.d; EX1003, ¶ 125.

e. Limitation 47(d)

See Section X.A.2.e; EX1003, ¶ 126.

f. Limitation 47(e)

See Section X.A.2.f; EX1003, ¶ 127.

g. Limitation 47(f)

See Sections X.A.2.f, X.A.4.e, X.A.4.h; EX1003, ¶128.

h. Limitation 47(g)

See Section X.A.2.g; EX1003, ¶ 129.

i. Limitation 47(h)

See Section X.A.2.h; EX1003, ¶ 130.

7. Independent Claim 52

a. Preamble

See Section X.A.2.a; EX1003, ¶ 131.

b. Limitation 52(a)

See Section X.A.2.b; EX1003, ¶ 132.

c. Limitation 52(b)

See Section X.A.2.c; EX1003, ¶ 133.

d. Limitation 52(c)

See Section X.A.2.d; EX1003, ¶ 134.

e. Limitation 52(d)

See Section X.A.2.e; EX1003, ¶ 135.

f. Limitation 52(e)

See Section X.A.2.f; EX1003, ¶ 136.

g. Limitation 52(f)

See Section X.A.2.h; EX1003, ¶ 137.

h. Limitation 52(g)

See Section X.A.2.g; EX1003, ¶ 138.

i. Limitation 52(h)

See Section X.A.3; EX1003, ¶ 139.

8. Independent Claim 54

a. Preamble

See Section X.A.2.a; EX1003, ¶ 140.

b. Limitation 54(a)

See Section X.A.2.b; EX1003, ¶ 141.

c. Limitation 54(b)

See Section X.A.2.c; EX1003, ¶ 142.

d. Limitation 54(c)

See Section X.A.2.d; EX1003, ¶ 143.

e. Limitation 54(d)

See Section X.A.2.e; EX1003, ¶ 144.

f. Limitation 54(e)

See Section X.A.2.f; EX1003, ¶ 145.

g. Limitation 54(f)

See Section X.A.2.h; EX1003, ¶ 146.

h. Limitation 54(g)

See Section X.A.2.g; EX1003, ¶ 147.

B. Ground 2: Claims 1, 32, 38, 39, 47, 52, and 54 are unpatentable under 35 U.S.C. § 103(a) over Yu in view of Paparrizos

1. Overview of the Combination

A PHOSITA would have found it obvious to combine teachings of Yu and Paparrizos. Both references involve devices with higher voltage (>5V) battery

packs. A PHOSITA would have been motivated to modify Yu in view of Paparrizos to include a USB charging input and circuit to achieve the predictable result of effectively charging the batteries of Yu's jump starter. *See* EX1003, ¶¶ 148-216. Specifically:

- Yu teaches a battery-powered device for jump starting 12V vehicle batteries. EX1008, Abstract, ¶ [0004]. Yu discloses an embodiment with a "12V/1A" input for charging a 12V battery. EX1008, FIG. 9; EX1003, ¶ 149.
- Paparrizos discloses a circuit for charging electronic devices having a multicell pack of series-connected cells. EX1009, 2:32-40. Paparrizos discloses its circuit can use 5V USB to charge higher voltage batteries. EX1009, 8:17-31; EX1003, ¶ 150.

A PHOSITA therefore would have been motivated to combine Yu and Paparrizos with predictable results because Paparrizos is directed to the known technique of charging a 12V battery from a 5V USB source using a DC-DC boost converter in accordance with its established function of converting a lower voltage input to a higher voltage output. EX1003, ¶ 151. Additionally, Paparrizos specifically teaches the desirability of charging higher voltage batteries with a 5V input, which is a known technique a PHOSITA would have been motivated to implement predictably to charge Yu's battery. EX1003, ¶ 151.

Further discussion of motivation to combine and expectation of success are detailed herein for each challenged claim. EX1003, ¶ 152.

2. Independent Claim 1

a. Preamble

Yu discloses a jump starting apparatus. EX1008, Abstract; *see also id.* at claim 1, ¶¶ [0001], [0003]-[0004], [0009], [0021], [0026]. For example, Yu's device has an output terminal for conveying power to jump start a vehicle battery. *See, e.g.*, EX1008, ¶ [0004], FIG. 1 ("output terminal" identified as reference numeral 3). Yu describes that its device includes a microprocessor-controlled relay, which can connect the device's internal batteries to an external battery of an automobile to jump start the battery. *See, e.g.* EX1008, Abstract. Thus, Yu's device can boost or charge a battery by connecting the internal batteries of the jump starter to the positive and negative terminals of a vehicle battery via output terminal 3 and associated wiring. EX1008, ¶¶ [0004], [0026]; FIG. 8 (indicating output terminal with reference numeral 3); EX1003, ¶ 153.

b. Limitation 1(a)

Yu discloses a device with "an internal battery" constituting a power supply. EX1008, Abstract; FIG. 1, claim 1, ¶¶ [0004], [0009], [0021]. The internal battery "will output current to the vehicle to be started through the output terminal 3," which indicates the internal battery is a multicell battery pack of series-connected

cells with an output voltage of approximately 12V. EX1008, ¶ [0026]; EX1003, ¶ 154.

c. Limitation 1(b)

Yu discloses "wiring" (also referred to as "external battery wiring" or "output terminal 3 wiring") which includes a positive polarity terminal connector as claimed. EX1008, Abstract, claim 1, ¶¶ [0004], [0021], [0026]. Figure 8 depicts output terminal 3 as a receptable that a PHOSITA would recognize as an EC5 connector, capable of mating with a plug integrated with wiring with cable clamps or other connectors for connecting to the positive terminal of the vehicle battery. EX1003, ¶ 155. The '023 patent admits such cables (and associated terminals, clamps or other connectors) were known in the prior art. EX1001, 1:10-16 ("Prior art devices are known, which provide either a pair of electrical connector cables … or portable booster devices which include a fully-charged battery which can be connected in circuit with the vehicle's engine starter through a pair of cables"); *id.* at 1:17-24, 1:31-35. Thus, a PHOSITA would understand Yu's wiring for connecting the device to a vehicle battery discloses or renders obvious a positive polarity battery terminal connector as claimed, particularly in light of Yu's contemplation of correct polarity versus reverse (or wrong) polarity connections which indicates there is both a positive polarity connector (and separately a

negative polarity connector). EX1008, Abstract, ¶¶ [0002]-[0003], [0008], [0026]; FIG. 2; EX1003, ¶ 155.

d. Limitation 1(c)

See, e.g., Section X.B.2.c, *supra*. Specifically, Yu's disclosure of wiring, the output terminal 3, and related discussions of polarity further demonstrate Yu discloses or renders obvious a negative polarity battery terminal connector as claimed. EX1008, Abstract, ¶¶ [0002]- [0004], [0008], [0021], [0026]; EX1003, ¶ 156.

e. Limitation 1(d)

Yu discloses a "relay" which functions as a power switch or circuit configured to turn on power as claimed. EX1008, Abstract, claim 1, ¶¶ [0004], [0009], [0021], FIG 1, FIG. 2. For example, Yu discloses a control module with a microprocessor which "controls the opening and closing of the relay through the relay switch circuit to control current output from the internal battery to the output terminal." EX1008, Abstract. Yu discloses the jump start process includes closing "relay 2" which then causes the internal battery to output current to the vehicle battery through the output terminal 3. EX1008, ¶ [0026]; EX1003, ¶ 157.

f. Limitation 1(e)

Yu discloses a control system or circuit connected to and controlling the relay. Specifically, the system comprised of the control module, microprocessor,

and associated sensors or circuitry constitutes the control system or circuit as claimed. EX1008, Abstract, claim 1, claim 3, ¶¶ [0004], [0006], [0021], [0023], [0026]-[0027], FIG. 1, FIG. 2. For example, when the vehicle battery is connected with the wrong polarity, Yu's device prevents the relay from closing. EX1008, Abstract. This is achieved through external battery reverse connection detection circuit which provides a signal to the microprocessor indicating whether there is a correct or incorrect polarity connection. EX1008, claim 1, ¶¶ [0003]-[0004], [0009], [0021], [0026]; FIG. 1 (identifying "External battery reverse connection detection circuit" as reference numeral 44); EX1003, ¶ 158.

Yu further discloses an exemplary embodiment where the external battery reverse connection detection circuit is depicted as an optocoupler which can provide an output signal to the microprocessor labeled as "resvese" in Figure 2. EX1007, FIG. 2; EX1008, FIG. 2. Yu's optocoupler is the same type of component that the '023 patent discloses as part of the polarity detection feature. *See, e.g.*, EX1001, 5:27-30 ("The reverse battery sensor 10 comprises an optically coupled isolator phototransistor (4N27) connected to the terminal of vehicle battery 72[.]"); EX1001, 5:32-36 (explaining "if the battery 72 is connected to the terminals of the booster device with the correct polarity, the optocoupler LED 11 will not conduct current, and is therefore turned off, providing a '1' or high output signal to the MCU 1."); EX1003, ¶ 159.

g. Limitation 1(f)

Yu discloses that its device has a charging input interface, which is depicted in Figure 9 as a 12V/1A barrel-style receptacle. EX1008, Abstract, FIG. 9 (reference numeral 10). Thus, while Yu does not teach a USB input circuit as claimed, such USB input circuits were well-known and a PHOSITA would have been motivated to combine such a USB input circuit from the prior art to Yu's device, with predictability in such circuit's ability to charge the internal battery of Yu's device. EX1003, ¶ 160. Specifically, Paparrizos teaches a USB input circuit as claimed which a PHOSITA would be motivated to combine to Yu's device to either (1) replace the charging circuitry, or (2) provide additional charging circuitry to enable an alternate means to charge Yu's device from a USB power source. EX1003, ¶ 160. Either option would have provided desirable features or improvements to Yu's jump starter, as discussed above in Section VII.A.2.g.

For example, Paparrizos discloses a battery charging circuit which can operate in a "boost (power stepped up mode)" and a "forward mode" to boost an input voltage from a USB source to a higher output to charge an internal battery of a device. EX1009, 1:34-38, FIG. 1B, FIG. 1C. Paparrizos discloses battery charging circuit 100 and related components which connect to and charge battery 14. EX1009, 2:30-40. The battery can constitute a series-connected configuration of cells of any suitable battery chemistry, such as lithium-ion batteries, at various

voltages above 5V, such as 6-8.4V or higher. *See id.*; EX1003, ¶ 161. Paparrizos further contemplates the charging circuit is an USB input circuit whereby power is received from a USB source. EX1009, 2:56-63, FIG. 1B (depicting an electronic device 16B serving as a power source connected to USB connector 16b), FIG. 1C (depicting a USB power source connected to micro-USB connector 16c).

The battery charging circuit of Paparrizos can operate in a "forward mode" where power from a USB source reaches the internal battery of a device via input terminal 102 and subsequently charging terminal 104. EX1009, 3:1-10. Further, the battery charging circuit can include a buck boost circuit 212 which can operate "as a boost converter" while the circuit is operating in forward mode. EX1009, 3:11-21. And "[a]n output of the buck boost circuit 212 may drive a charger 214 (e.g., a linear charger, or any other suitable circuit) that is connected to the charging terminal 104 to provide a charging current for battery 14." EX1009, 4:36-39; EX1003, ¶¶ 161-162.

When "the voltage level at the input terminal 102 is lower than what is needed by the battery 14, then the battery charging circuit 100 may operate in a 'forward boost' mode in order to step up the voltage level to a suitable level." EX1009, 3:31-35. Accordingly, if a 5V USB power source is connected to the battery charging circuit when the battery to be charged is above 5V, then the circuit can operate "as a forward boost converter to increase the voltage level that is

receive at input terminal 102 to produce suitable voltage level at charging terminal 104 or system terminal 106." EX1009, 3:58-4:4. Thus, a PHOSITA would understand Paparrizos teaches a USB input circuit that can receive a 5V USB input and increase that power voltage up to approximately 12V via a DC-DC power conversion boosting technique to charge a device with a 3S (three Li-ion cells connected in series) battery pack. *See id*.; *see also id.* at 2:31-38 (discussing application to 3S stack of series connected cells); *id.* at 8:10-30 (discussing use of forward boost mode to use a 5V USB input to charge a 3S battery which outputs 12V); *id.* at 9:36-46 (discussing operation and components of boost converter) ; EX1003, ¶ 163.

A PHOSITA would have found it obvious to implement the battery charging circuit of Paparrizos in Yu's device. For example, Paparrizos identifies a need for using "very popular" USB technology for charging multicell battery packs rated above 5V. EX1009, 1:18-26. Paparrizos goes on to provide an explicit teaching, suggestion, or motivation to implement its battery charging circuit in a device that has batteries that can output 12V, like Yu's jump starter. *See* EX1009, 2:32-38, 8:18-31. As another example, outside the explicit teachings of Paparrizos, the desirability of 5V USB charging of devices with batteries of 5V was well-known to a PHOSITA before the claimed priority date. *See* Section X.A.2.g, *supra*. And a PHOSITA would have found the combination of Paparrizos' battery charging

circuit in Yu's device to involve the predictable application of a DC-DC boosting technique Paparrizos explicitly recognizes as prior art. *See, e.g.*, EX1009, 9:36-46; FIG. 8A (identifying a "Basic Boost Converter Circuit" as "prior art") ; EX1003, ¶ 164.

h. Limitation 1(g)

Yu discloses a charging input interface, which can be a 12V/1A barrel-style receptacle. EX1008, Abstract, FIG. 9 (reference numeral 10). While Yu is not explicit that the charger's input interface could be a 5V USB input port processed by a boost converter IC, a PHOSITA would have found it obvious to combine the relevant disclosure of Paparrizos's USB-powered device with Yu's device in order to implement a USB charging feature for the device. *See* Limitation 1(f), *supra*. As previously noted, USB technology was highly popular and provided desirable benefits such as avoiding proprietary chargers through universal chargers, cables, and connectors and other convenience such as ease of use and durability. EX1003, ¶ 165. Thus, a PHOSITA would have been motivated to cater to the demand and interest in USB technology. *Id*. Moreover, Paparrizos provides the explicit teaching, suggestion, or motivation to implement a USB connector (*e.g.* a USB input connector as claimed) on a device for purposes of USB charging. EX1009, 1:18-23 ("Consumers are used to USB, mini-USB, and micro-USB connectors

being present in portable electronics and their use for battery charging from a USB power source.”) ; EX1003, ¶ 165.

For example, when implementing the USB input circuit of Paparrizos as discussed in connection with Limitation 1(f) above, a PHOSITA would have understood the need to add a USB receptable, such as a micro-USB or other version of USB connector, to Yu’s device as taught by Paparrizos. *See* EX1009, 2:56-63, FIG. 1B (identifying USB connector 16b); FIG. 1C (identifying micro-USB connector 16c). As a standard power input connector, a PHOSITA would have been able to implement such a USB connector with Yu’s disclosed device with relative ease. EX1003, ¶ 166. As disclosed by Paparrizos, the USB connectors serve as a USB input connector as claimed as the connectors connect to an external USB power source and subsequently convey power input from the USB power source to battery charging circuit 100 and ultimately the battery 14. EX1009, 2:59-67, 3:1-6, 4:36-39; EX1003, ¶ 166.

3. Claim 32

Paparrizos explicitly teaches buck boost circuit 212 is used as a DC-DC converter to increase the 5V USB level to the nominal voltage required to recharge a higher voltage battery. EX1009, 4:45-46, 7:7-10, 8:10-31, 9:10-46. A. Figure 5 of Paparrizos discloses a “workflow” which a PHOSITA would understand to be best implemented by a microprocessor. EX1009, FIG. 5; EX1003, ¶ 167. Otherwise, a

PHOSITA would need to implement various configurations in hardware which are not explicitly described in Paparrizos for performing the workflow of Figure 5. EX1003, ¶ 167. Additionally, a PHOSITA would understand a microprocessor would be one of the most effective, reliable, and cost-effective choice for implementing control of the ON/OFF state of the buck boost circuit 212. EX1009, FIG. 6; EX1003, ¶ 167. Accordingly, Paparrizos teaches or renders obvious the use of a buck-boost step-up converter that can be turned on and off by a microprocessor or microcontroller. EX1003, ¶ 167.

A PHOSITA would have been motivated to implement this feature of Paparrizos in the USB charging circuitry combined with Yu as discussed above in connection with Limitation 1(f). Additionally, microprocessor control of the ON/OFF state of the boost converter allows the device to save power by disabling the DC-DC boosting feature when charging through the USB input circuit is terminated. EX1003, ¶ 168. A PHOSITA would have a reasonable expectation of success in implementing this feature as signal control of switches is a basic and predictable technique.

Yu, in view of Paparrizos, therefore renders obvious every element of claim 32. EX1003, ¶ 169.

4. Independent Claim 38

a. Preamble

See Section X.B.2.a; EX1003, ¶ 170.

b. Limitation 38(a)

See Section X.B.2.b; EX1003, ¶ 171.

c. Limitation 38(b)

See Section X.B.2.c; EX1003, ¶ 172.

d. Limitation 38(c)

See Section X.B.2.d; EX1003, ¶ 173.

e. Limitation 38(d)

Yu discloses a control system which includes a battery presence sensor or circuit as claimed. Specifically, Yu discloses its control system also detects whether a battery is present (*i.e.* connected) or absent (*i.e.*, disconnected) by detecting the voltage of an external battery when it is connected to the device. EX1008, claim 3, ¶¶ [0006], [0009], [0023], [0026]-[0027], Fig. 1, Fig. 2; EX1003, ¶ 174. This battery detection is achieved through the microprocessor receiving a signal from the external battery voltage detection circuit which conveys information regarding the detected voltage. EX1008, ¶¶ [0006], [0009], [0026], Fig. 1, Fig. 2. Yu's battery presence sensor is separate from its reverse polarity sensor or circuit. *See id*; EX1003, ¶ 174. Yu discloses an example of an external battery detection circuit 45 which includes a voltage divider that provides the "OUT-CHECK" output signal. EX1008, FIG. 2; EX1003, ¶ 174.

To the extent Patent Owner argues Yu does not disclose a battery presence sensor or circuit as claimed (or otherwise argues Yu lacks a control system or circuit configured to detect presence of a vehicle battery when such battery is connected to the jump starter), it would have been obvious and within the general knowledge of a PHOSITA to program Yu's microprocessor to detect battery presence based upon the OUT-CHECK signal received from external battery detection circuit 45. Specifically, a PHOSITA would have been motivated to program the microprocessor of Yu's device to treat the OUT-CHECK signal as indicative of the absence or presence of a vehicle battery by correlating the signal to predetermined thresholds. EX1003, ¶ 175. For example, after accounting for the selected resistor values for R70 and R72, if the OUT-CHECK signal indicates no voltage has been detected or a voltage near 0 volts have been detected, the microprocessor would be programmed to make the determination that no battery is connected to the device. EX1003, ¶ 175. Similarly, if a voltage is detected by the external battery voltage detection circuit at or above a predetermined threshold (for example, 1V), the microprocessor would be programmed to determine an external battery is present and connected to the device. EX1003, ¶ 175. This is further corroborated by Yu's disclosure of the feature of preventing "generation of electric sparks when connecting or disconnecting from the vehicle" which indicates to a PHOSITA the microprocessor would be programmed to make the determination of

whether a battery is present to the wiring of Yu's device before energizing the connections to the vehicle battery terminals. EX1008, ¶¶ [0003], [0009], [0026]. A PHOSITA would have been motivated to implement these changes to Yu's device by programming the microprocessor accordingly in view of a PHOSITA's general knowledge in order to obtain the desirable benefit of enhancing safety and avoiding generation of sparks as described by Yu. EX1003, ¶ 175. A PHOSITA would have made such modifications with predictable results as programming a microprocessor to compare values indicative of voltage against thresholds written into the microprocessor's programming, would allow the microprocessor to predictably determine whether a voltage indicative of battery presence has been detected by the control system. EX1003, ¶ 175.

f. Limitation 38(e)

See Section X.B.2.f; EX1003, ¶ 176.

g. Limitation 38(f)

See Section X.B.2.e; EX1003, ¶ 177.

h. Limitation 38(g)

See Section X.B.2.f; EX1003, ¶ 178. To the extent Patent Owner argues this Limitation requires separate or distinct signals from a battery presence sensor and a reverse polarity sensor (or otherwise requires separate or distinct signals indicating battery presence and polarity), Yu discloses separate signals and separate sensors

for detecting battery presence and polarity. EX1008, Fig. 1, Fig. 2, claim 1, claim 3, ¶¶ [0004], [0006], [0009], [0026]; EX1003, ¶ 179.

The Board made similar findings regarding Richardson in the '015-FWD, which was affirmed on appeal. EX1014 at 51-67; EX1015 at 2.

i. Limitation 38(h)

See Section X.B.2.g; EX1003, ¶ 180.

j. Limitation 38(i)

See Section X.B.2.h; EX1003, ¶ 181.

5. Independent Claim 39

a. Preamble

See Section X.B.2.a; EX1003, ¶ 182.

b. Limitation 39(a)

See Section X.B.2.b; EX1003, ¶ 183.

c. Limitation 39(b)

See Section X.B.2.c; EX1003, ¶ 184.

d. Limitation 39(c)

See Section X.B.2.d; EX1003, ¶ 185.

e. Limitation 39(d)

See Section X.B.2.e; EX1003, ¶ 186.

f. Limitation 39(e)

See Section X.B.2.f; EX1003, ¶ 187.

g. Limitation 39(f)

See Sections X.B.2.f, X.B.4.e, X.B.4.h; EX1003, ¶ 188.

h. Limitation 39(g)

See Section X.B.2.g; EX1003, ¶ 189.

i. Limitation 39(h)

See Section X.B.2.h; EX1003, ¶ 190.

6. Independent Claim 47

a. Preamble

See Section X.B.2.a; EX1003, ¶ 191.

b. Limitation 47(a)

See Section X.B.2.b; EX1003, ¶ 192.

c. Limitation 47(b)

See Section X.B.2.c; EX1003, ¶ 193.

d. Limitation 47(c)

See Section X.B.2.d; EX1003, ¶ 194.

e. Limitation 47(d)

See Section X.B.2.e; EX1003, ¶ 195.

f. Limitation 47(e)

See Section X.B.2.f; EX1003, ¶ 196.

g. Limitation 47(f)

See Sections X.B.2.f, X.B.4.e, X.B.4.h; EX1003, ¶ 197.

h. Limitation 47(g)

See Section X.B.2.g; EX1003, ¶ 198.

i. Limitation 47(h)

See Section X.B.2.h; EX1003, ¶ 199.

7. Independent Claim 52

a. Preamble

See Section X.B.1.a; EX1003, ¶ 200.

b. Limitation 52(a)

See Section X.B.1.b; EX1003, ¶ 201.

c. Limitation 52(b)

See Section X.B.1.c; EX1003, ¶ 202.

d. Limitation 52(c)

See Section X.B.1.d; EX1003, ¶ 203.

e. Limitation 52(d)

See Section X.B.1.e; EX1003, ¶ 204.

f. Limitation 52(e)

See Section X.B.1.f; EX1003, ¶ 205.

g. Limitation 52(f)

See Section X.B.1.h; EX1003, ¶ 206.

h. Limitation 52(g)

See Section X.B.1.g; EX1003, ¶ 207.

i. Limitation 52(h)

See Section X.B.3; EX1003, ¶ 208.

8. Independent Claim 54

a. Preamble

See Section X.B.2.a; EX1003, ¶ 209.

b. Limitation 54(a)

See Section X.B.2.b; EX1003, ¶ 210.

c. Limitation 54(b)

See Section X.B.2.c; EX1003, ¶ 211.

d. Limitation 54(c)

See Section X.B.2.d; EX1003, ¶ 212.

e. Limitation 54(d)

See Section X.B.2.e; EX1003, ¶ 213.

f. Limitation 54(e)

See Section X.B.2.f; EX1003, ¶ 214.

g. Limitation 54(f)

See Section X.B.2.h; EX1003, ¶ 215.

h. Limitation 54(g)

See Section X.B.2.g; EX1003, ¶ 216.

XI. CONCLUSION

Petitioner has demonstrated in this Petition that Claims 1, 32, 38, 39, 47, 52, and 54 of the ’023 patent are unpatentable. Petitioner respectfully requests institution of an *inter partes* review of the ’023 patent and Claims 1, 32, 38, 39, 47, 52, and 54 be cancelled.

Respectfully submitted,

Dated: February 15, 2024

By: /Daisy Manning/

Daisy Manning, Reg. No. 66,369
Paul L. Smelcer, Reg. No. 74,975
HUSCH BLACKWELL LLP
8001 Forsyth Boulevard, Suite 1500
St. Louis, MO 63105
(314) 480-1500 Telephone
(314) 480-1505 Facsimile
PTAB-DManning@huschblackwell.com
paul.smelcer@huschblackwell.com
Attorneys for Petitioner

CERTIFICATION OF WORD COUNT

The Petition excluding the caption, Table of Contents, Table of Authorities, Table of Exhibits, Mandatory Notices under 37 C.F.R. § 42.8, this Certification, and Certificate of Service contains 13,890 words.

Respectfully submitted,

Dated: February 15, 2024 By: /Daisy Manning/
Daisy Manning, Reg. No. 66,369
Lead Counsel for Petitioner

CERTIFICATE OF SERVICE

Pursuant to 37 C.F.R. § 42.105, Petitioner certifies that this Petition for Inter Partes Review and supporting evidence was served by Federal Express®, on February 15 2024, to the Patent Owner of U.S. Patent No. 11,447,023 at their correspondence address of record according to USPTO records:

William L. Klima, Reg. No. 32,422
Michael Messinger, Reg. No. 44,677
Vorys, Sater, Seymour and Pease LLP
1909 K St., NW
9th Floor
Washington, DC 20006
patlaw@vorys.com

With courtesy copy to:
Alexis Adian Smith, asmith@JonesDay.com
Jones Day
555 S. Flower Street, 50th Floor
Los Angeles, CA 90071-2452

Meredith M. Wilkes, mwilkes@JonesDay.com
David B. Cochran, dcochran@JonesDay.com
John C. Evans, jcevans@JonesDay.com
Jones Day
North Point
901 Lakeside Avenue
Cleveland, OH 44114-1190

By: /Daisy Manning/
Daisy Manning, Reg. No. 66,369
Lead Counsel for Petitioner