US 20130154543A1

(19) United States

(12) Patent Application Publication

Richardson et al.

(10) Pub. No.: US 2013/0154543 A1

(43) Pub. Date: Jun. 20, 2013

(54) **METHOD AND APPARATUS FOR PROVIDING SUPPLEMENTAL POWER TO AN ENGINE**

(71) Applicants: **Francis D. Richardson**, Eudora, KS (US); **Richard L. Henderson**, Leawood, KS (US); **John A. Fox**, Eudora, KS (US); **Russell W. Sherwood**, Olathe, KS (US)

(72) Inventors: **Francis D. Richardson**, Eudora, KS (US); **Richard L. Henderson**, Leawood, KS (US); **John A. Fox**, Eudora, KS (US); **Russell W. Sherwood**, Olathe, KS (US)

(21) Appl. No.: **13/768,534**

(22) Filed: **Feb. 15, 2013**

Related U.S. Application Data

(63) Continuation-in-part of application No. 12/436,562, filed on May 6, 2009, which is a continuation-in-part of application No. 12/330,875, filed on Dec. 9, 2008, now abandoned.

(60) Provisional application No. 61/018,715, filed on Jan. 3, 2008.

Publication Classification

(51) **Int. Cl.**
H02J 7/00 (2006.01)

(52) **U.S. Cl.**
CPC ***H02J 7/007*** (2013.01)
USPC **320/104**; 320/136; 320/134; 320/109

(57) **ABSTRACT**

A method and apparatus provides supplemental power to an engine. The method and apparatus includes a pair of conductive leads for connecting the supplemental power to an engine electrical system, one or more batteries connected in parallel with one or more capacitors, a relay connected to the conductive leads, a shunt cable connecting the batteries and capacitors to the relay and a processor for controlling the relay to selectively apply electrical power to the engine electrical system. The method and apparatus includes safety features to reduce the risk of injury to the operator and damage to the apparatus and/or engine electrical system.

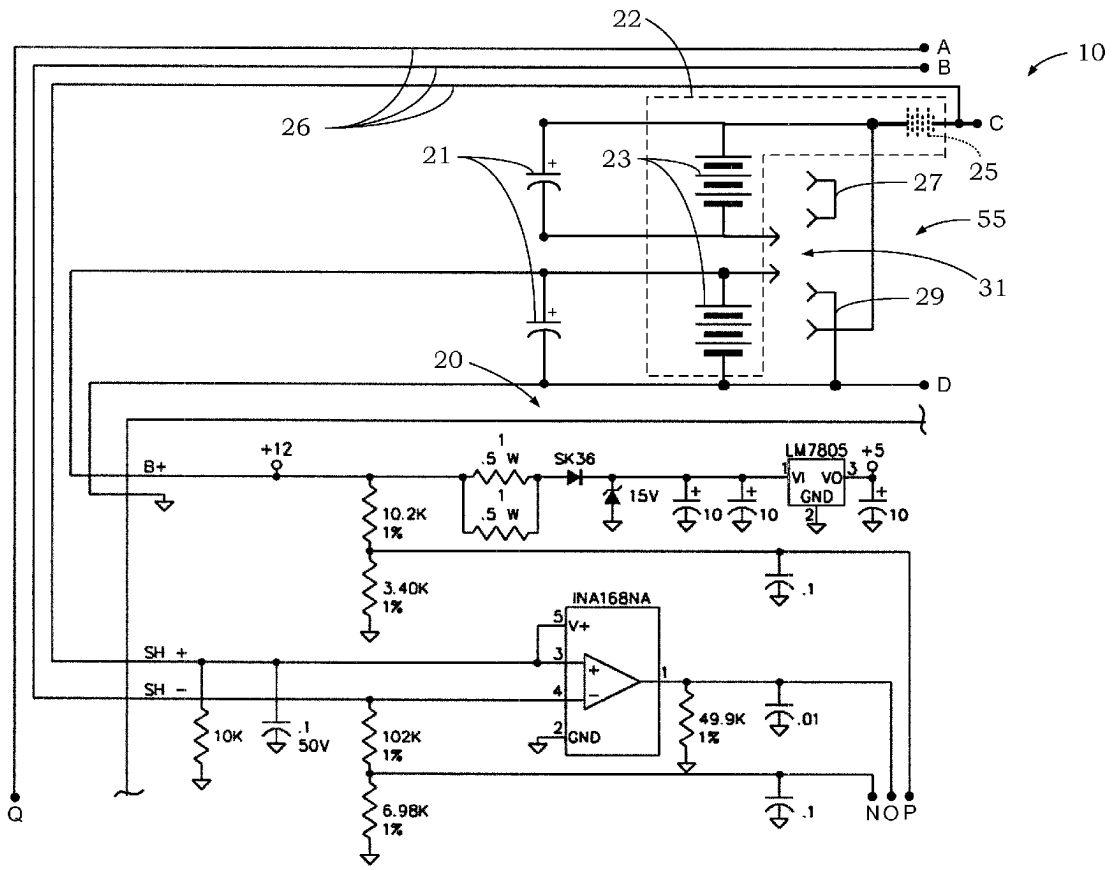

EXHIBIT 1005
Petitioner ADC (IPR2024-00577)

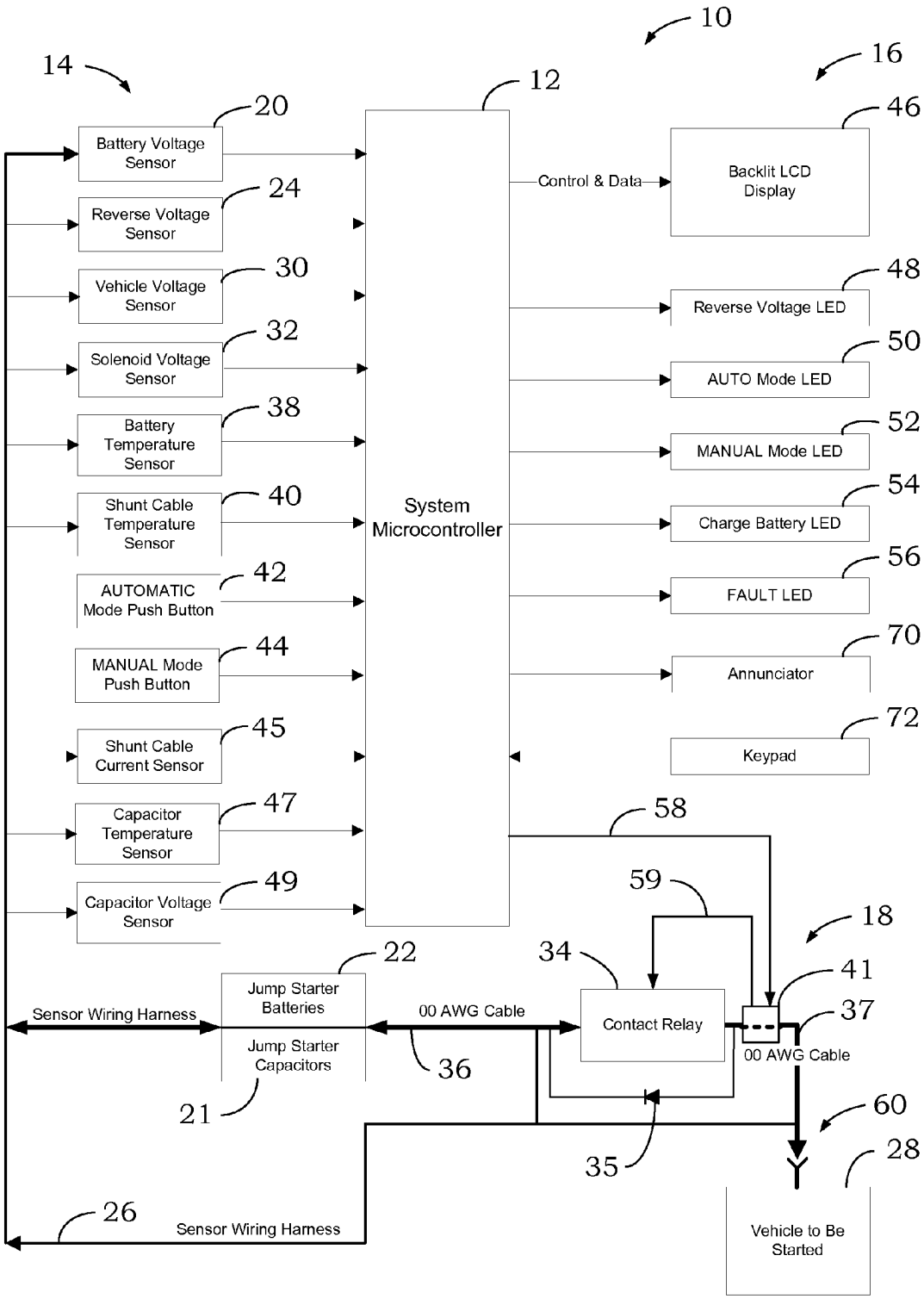

Fig. 1

EXHIBIT 1005
Petitioner ADC (IPR2024-00577)

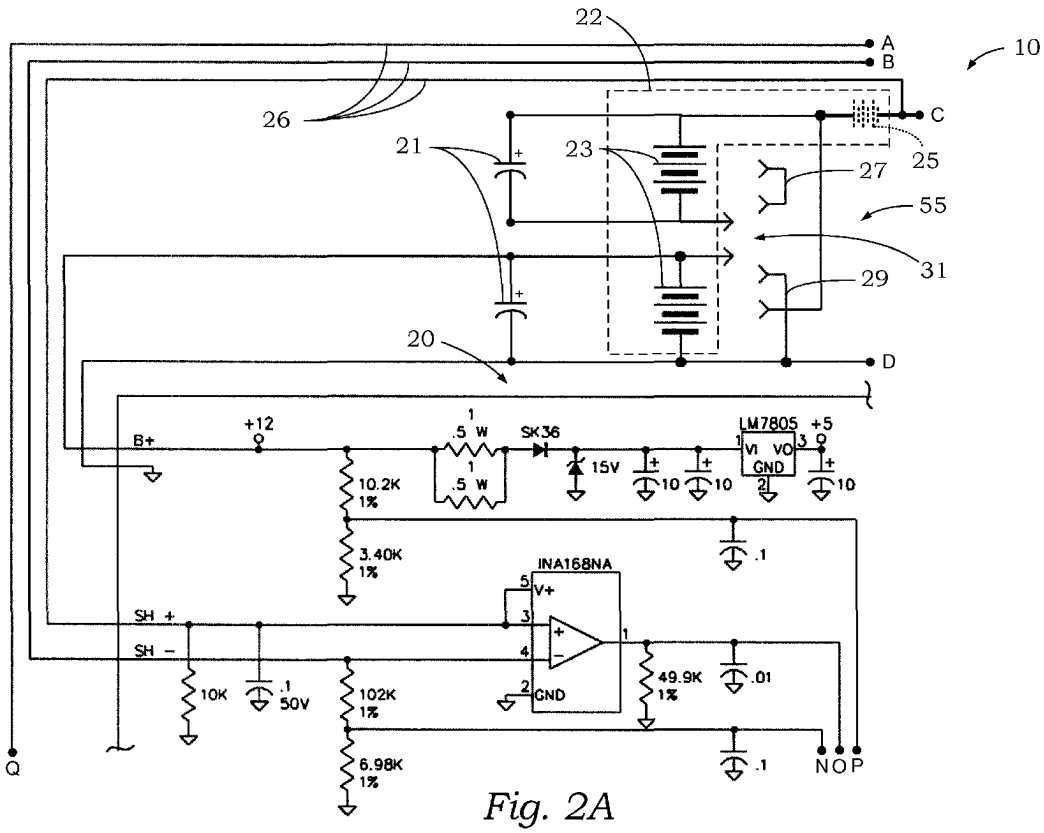

Fig. 2A

EXHIBIT 1005
Petitioner ADC (IPR2024-00577)

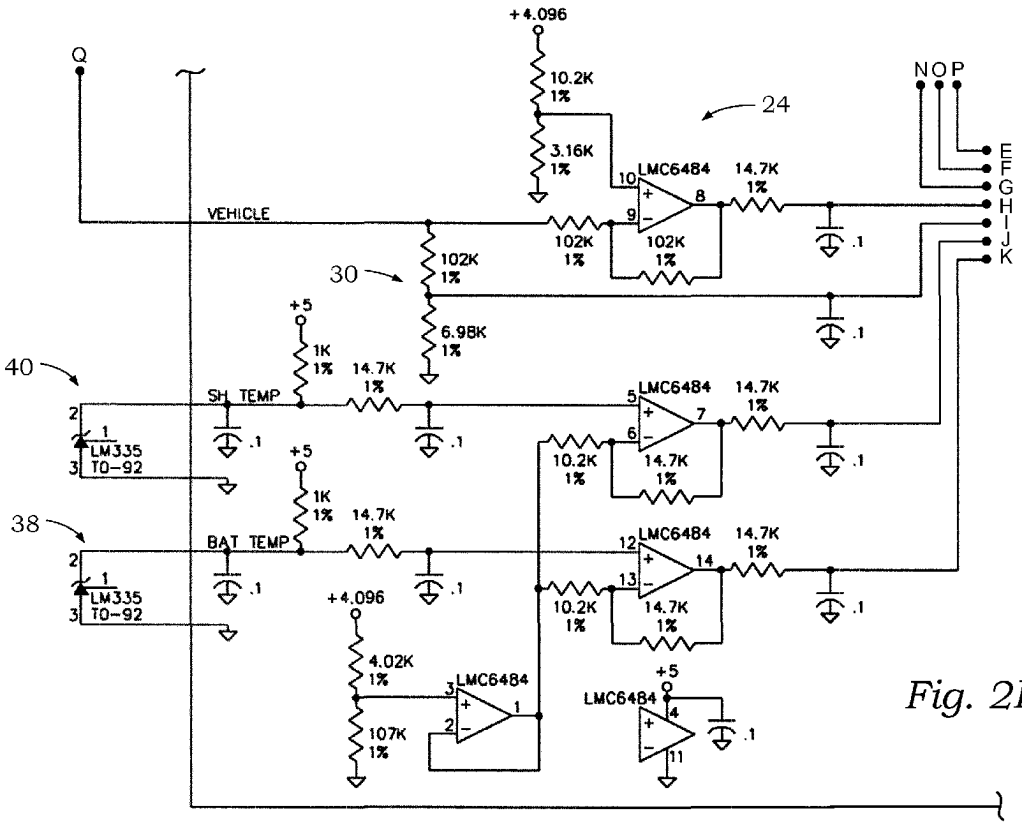

Fig. 2B

EXHIBIT 1005
Petitioner ADC (IPR2024-00577)

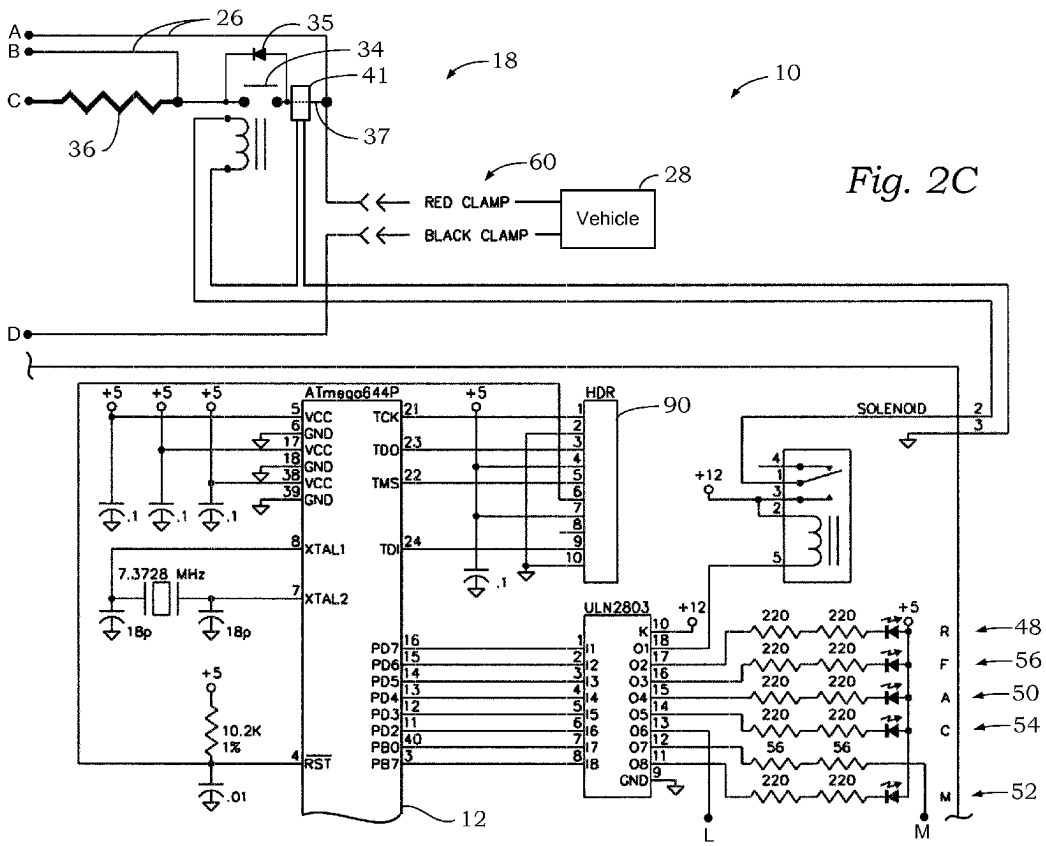

Fig. 2C

EXHIBIT 1005
Petitioner ADC (IPR2024-00577)

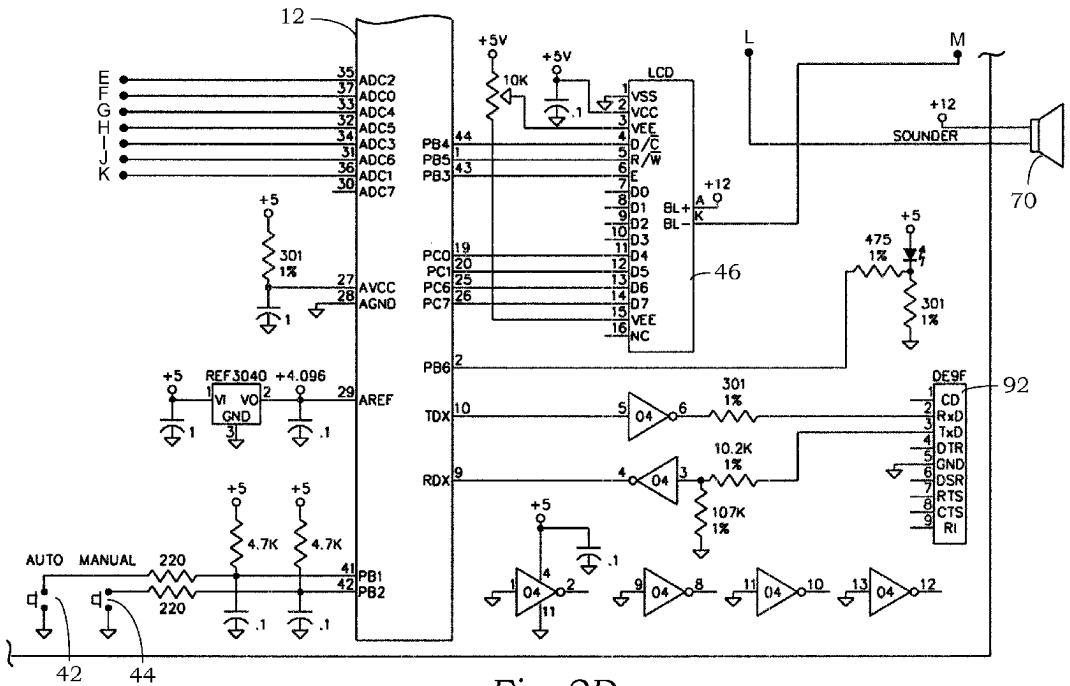

Fig. 2D

EXHIBIT 1005
Petitioner ADC (IPR2024-00577)

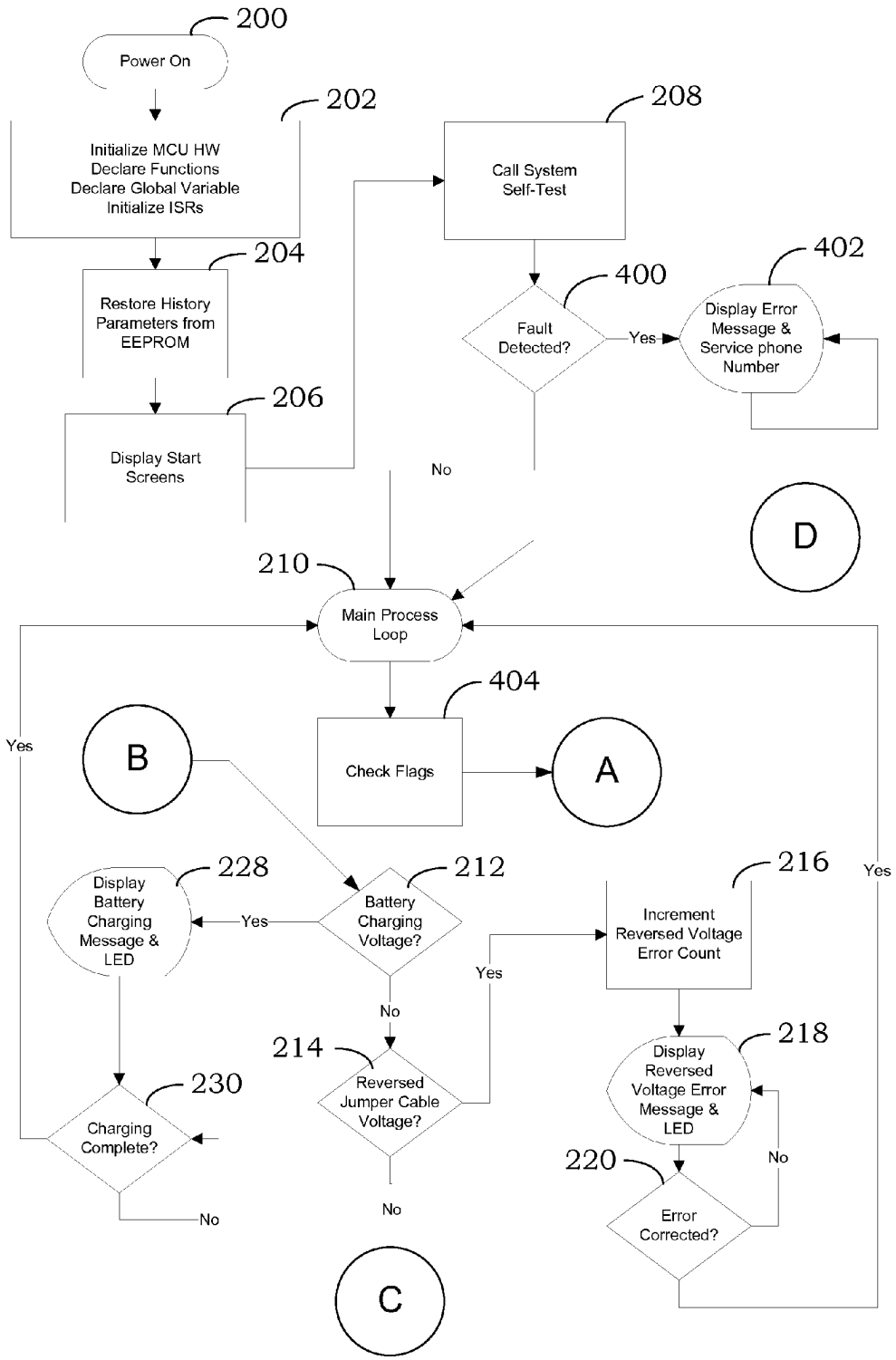

Fig. 3

EXHIBIT 1005
Petitioner ADC (IPR2024-00577)

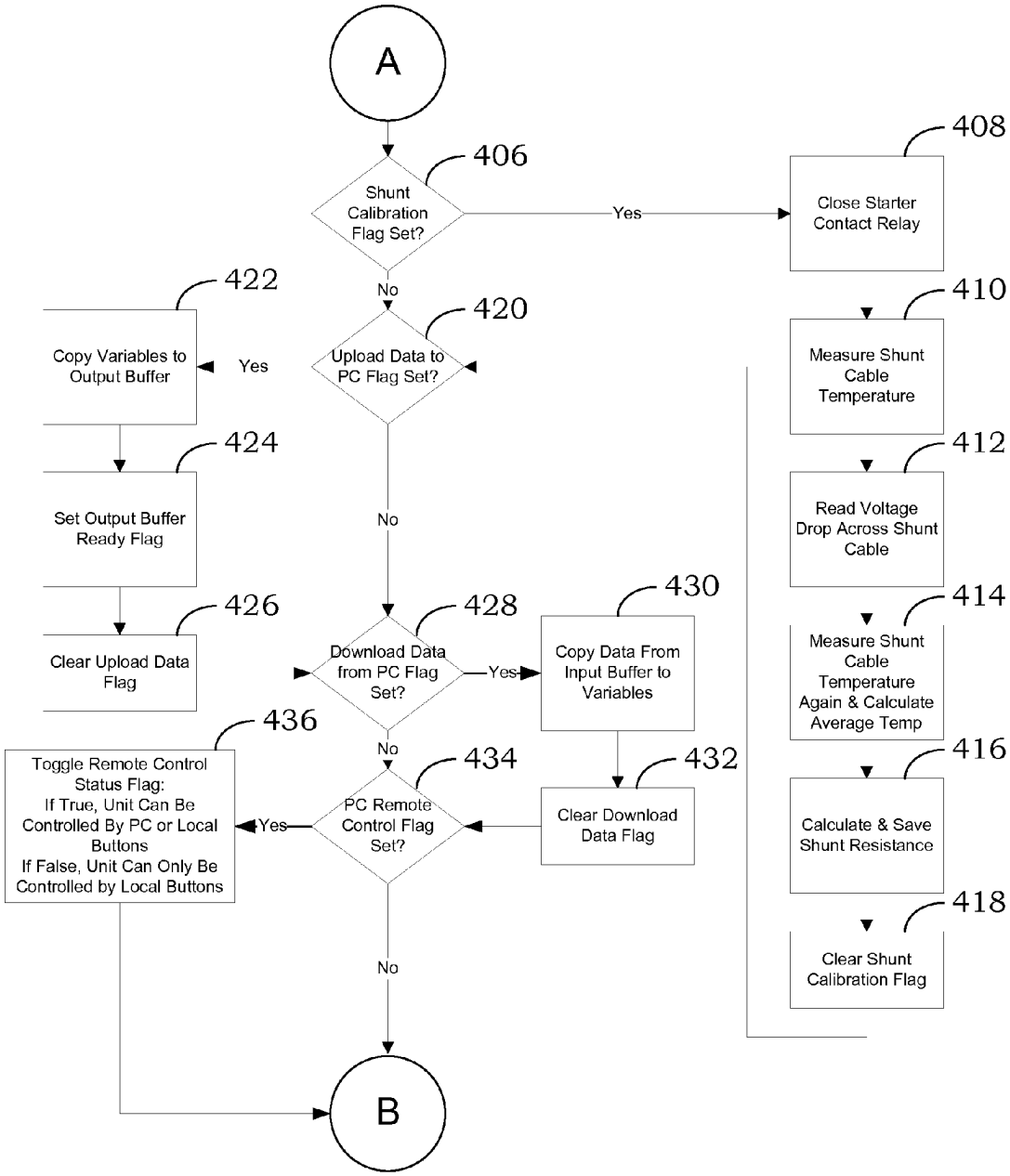

Fig. 4

EXHIBIT 1005
Petitioner ADC (IPR2024-00577)

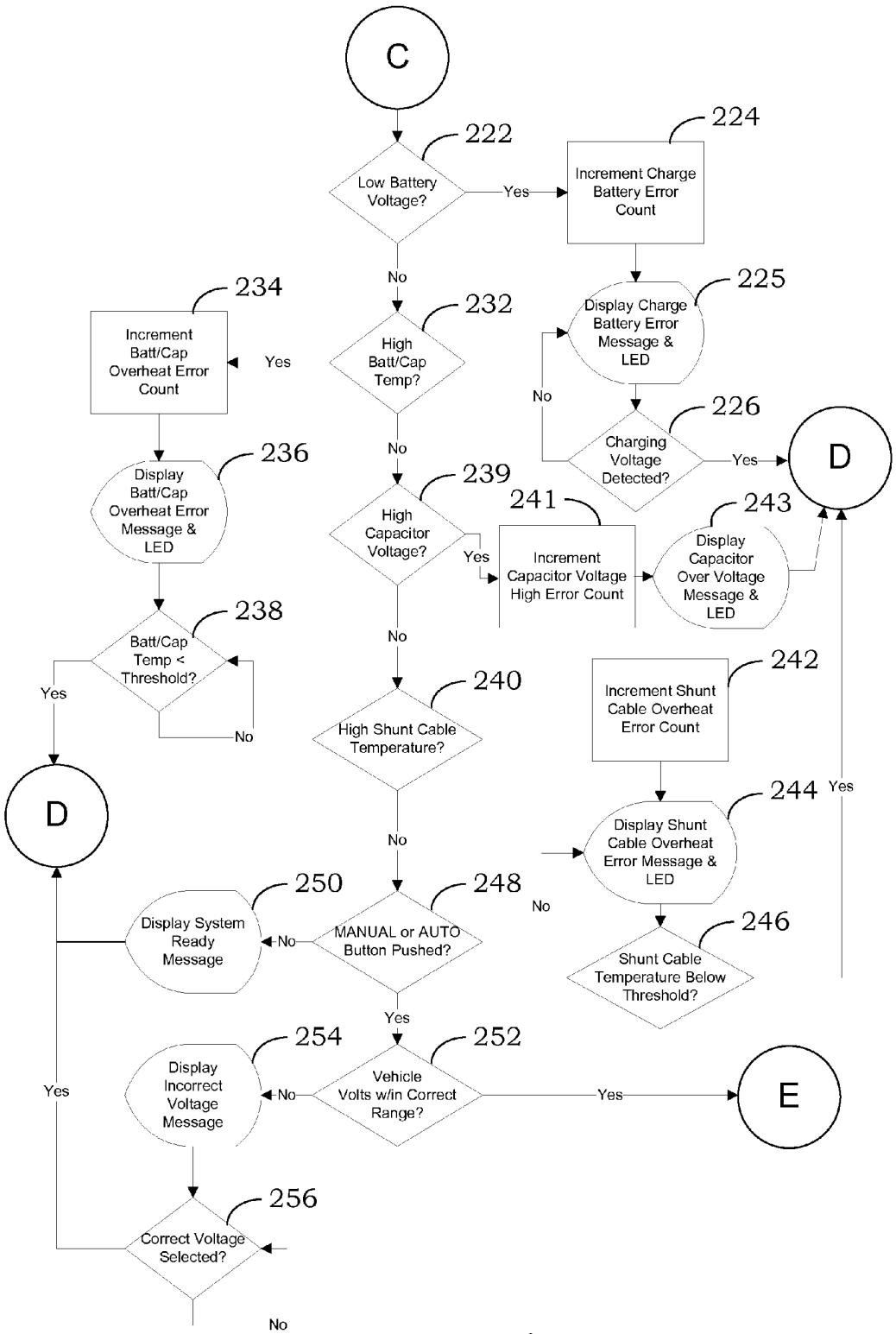

Fig. 5

EXHIBIT 1005
Petitioner ADC (IPR2024-00577)

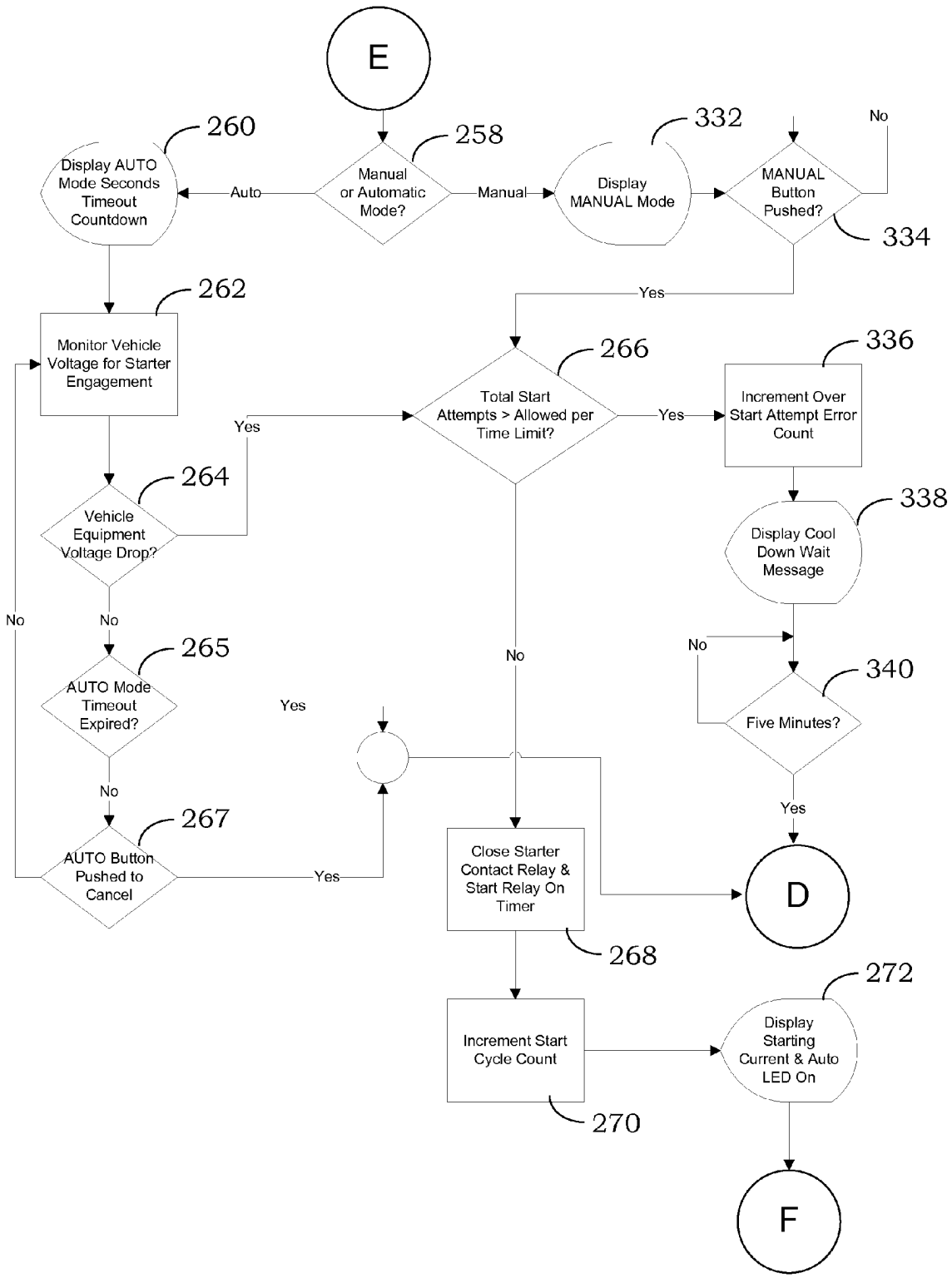

Fig. 6

EXHIBIT 1005
Petitioner ADC (IPR2024-00577)

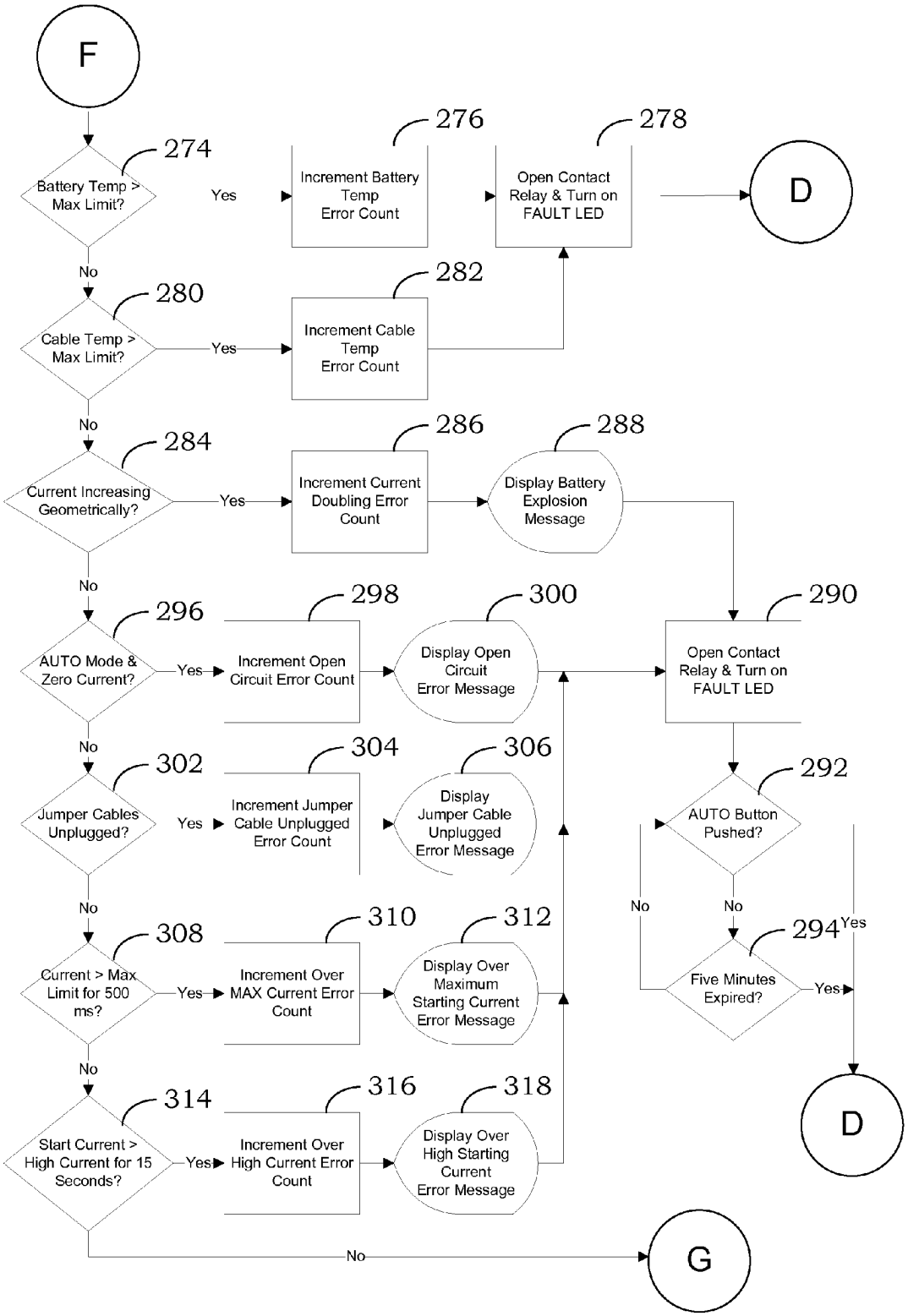

Fig. 7

EXHIBIT 1005
Petitioner ADC (IPR2024-00577)

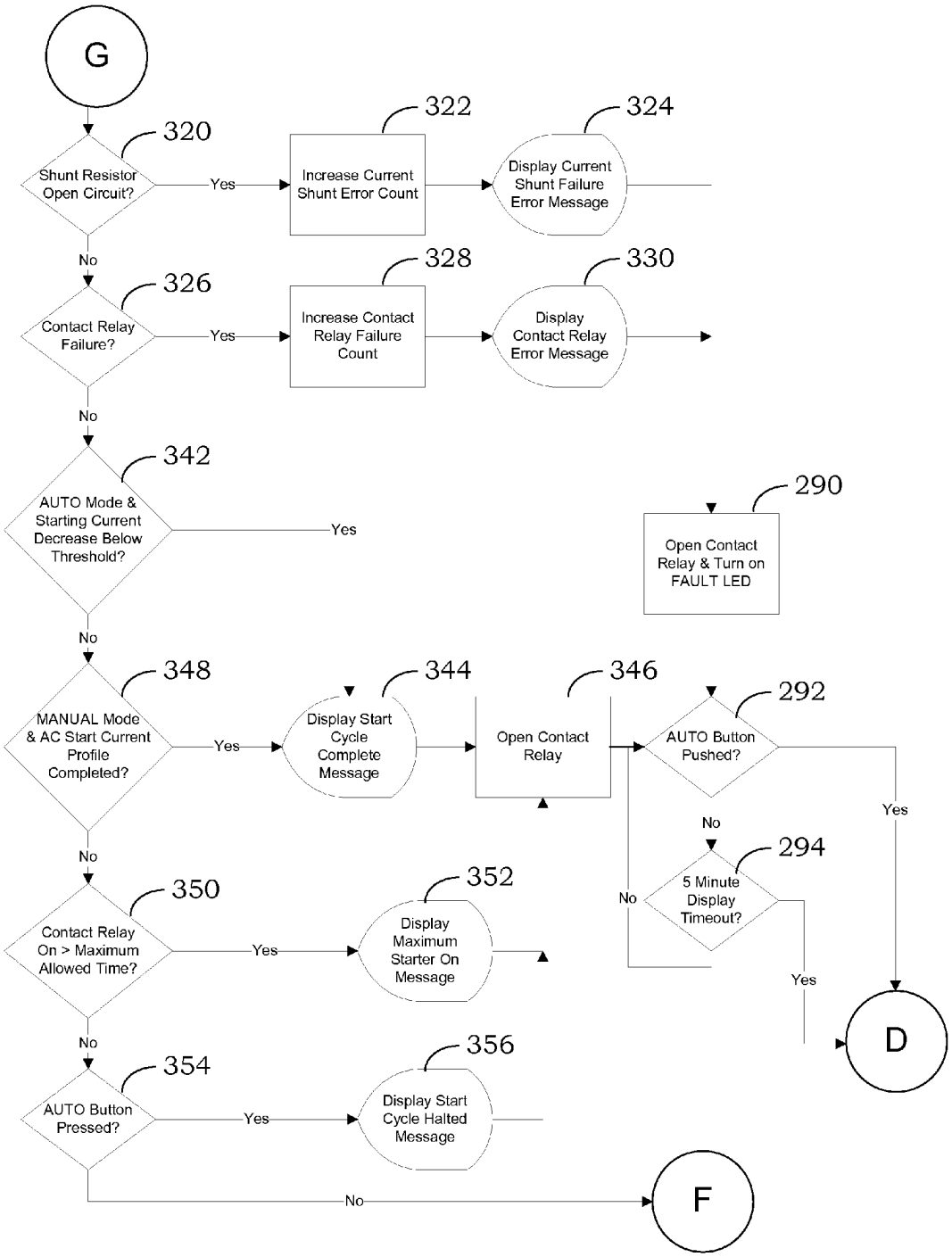

Fig. 8

EXHIBIT 1005
Petitioner ADC (IPR2024-00577)

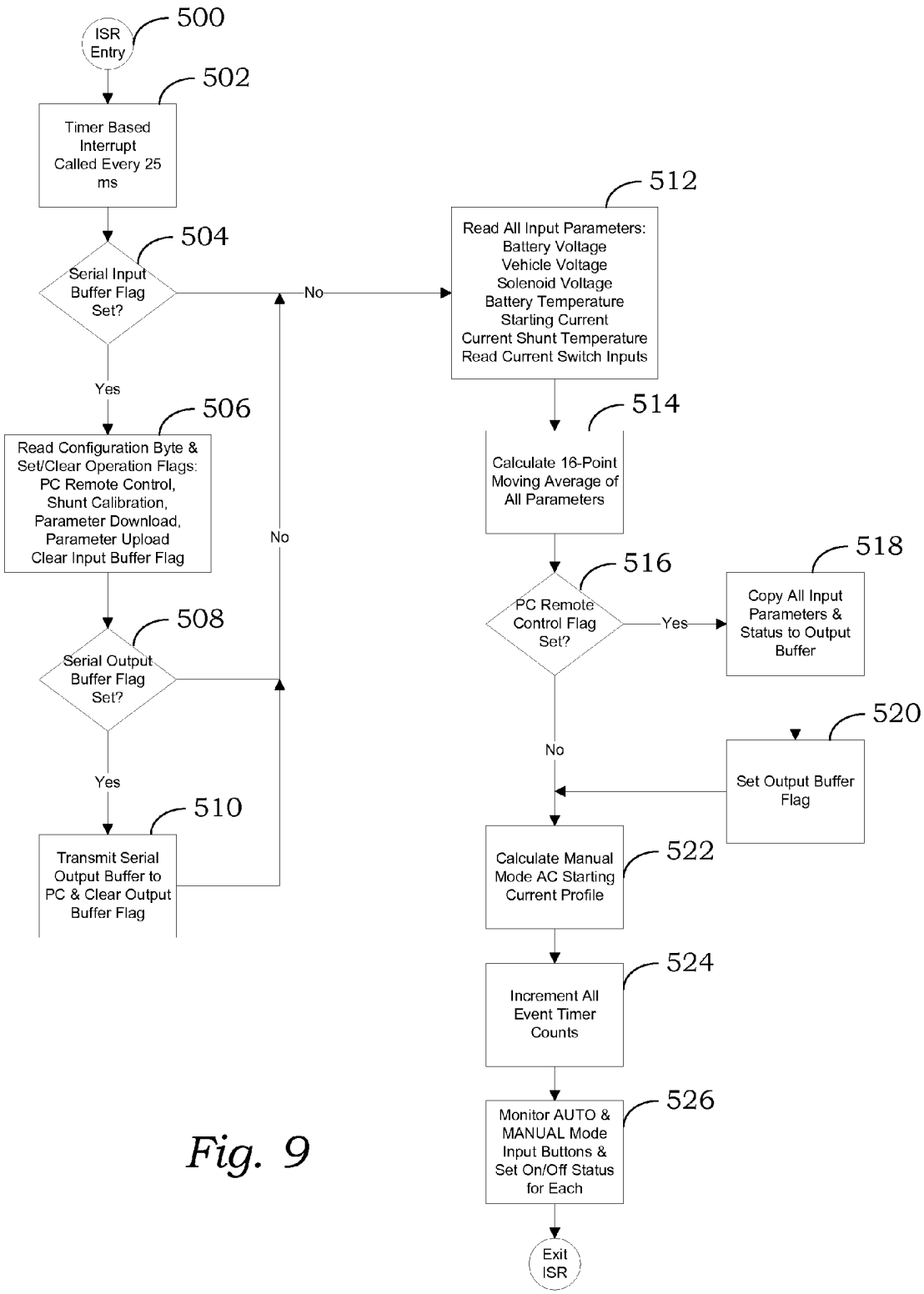

Fig. 9

EXHIBIT 1005
Petitioner ADC (IPR2024-00577)

METHOD AND APPARATUS FOR PROVIDING SUPPLEMENTAL POWER TO AN ENGINE

CROSS REFERENCE TO RELATED APPLICATIONS

[0001] This application is a continuation-in-part of application Ser. No. 12/436,562, filed May 6, 2009, entitled METHOD AND APPARATUS FOR PROVIDING SUPPLEMENTAL POWER TO AN ENGINE, which is a continuation-in-part of application Ser. No. 12/330,875, filed Dec. 9, 2008, entitled METHOD AND APPARATUS FOR PROVIDING SUPPLEMENTAL POWER TO AN ENGINE, which claims the benefit of provisional patent application 61/018,715, filed Jan. 3, 2008. with the same title.

FIELD

[0002] The present invention relates to a portable power source for a motor vehicle and, more particularly, to a method and apparatus to provide supplemental power to start internal combustion and turbine engines.

BACKGROUND

[0003] Internal combustion and turbine engines require a power source to start. Commonly, this power source is in the form of a battery, which provides power to a starter motor, which in turn drives the engine. The crankshaft of the engine is rotated by the starter motor at a speed sufficient to start the engine. If the battery goes dead or otherwise lacks sufficient power for the starter motor to drive the engine, the engine won't start. Environmental factors, such as temperature, affect the output of the battery and power required to rotate the engine.

[0004] If the battery lacks sufficient power to start the engine, a supplemental power source is necessary to jump start the engine. Typically, jumper cables are used to connect the battery of one vehicle to the dead battery of another vehicle needing to be jumped. The batteries are connected in parallel using heavy cables (jumper cables) which are connected to the terminals of the batteries using conductive clamps.

[0005] Several potential problems arise from the use of conventional jumper cables. Batteries in motor vehicles are capable of producing from 2,500 to more than 45,000 watts of power. If the batteries are cross-connected or the clamps inadvertently contact each other when one end of the jumper cables is connected to a battery, sparking can occur resulting in damage to the battery, the electrical system of the vehicle, and injury to the user of the jumper cables. If the jumper cables are not properly connected, there is a potential for the batteries exploding and fire, which may result in injury to those in proximity to the vehicle being jumped. Furthermore, the user is not given any indication as to the reason the battery is dead, which may only cause additional problems when trying to jump start the dead battery.

SUMMARY

[0006] The present invention provides an apparatus and method for temporarily delivering supplemental power to the electrical system of a vehicle. The apparatus and method performs real-time monitoring of all system parameters to increase the safety and effectiveness of the unit's operation while providing additional parametric and diagnostic information obtained before, during and after the vehicle starting operation.

[0007] The present invention monitors the voltage of the battery of the vehicle to be jump started and the current delivered by the jump starter batteries and capacitors to determine if a proper connection has been established and to provide fault monitoring. For safety purposes, only if the proper polarity is detected can the system operate. The voltage is monitored to determine open circuit, disconnected conductive clamps, shunt cable fault, and solenoid fault conditions. The current through the shunt cable is monitored to determine if there is a battery explosion risk, and for excessive current conditions presenting an overheating condition, which may result in fire. The system includes one or more internal batteries and capacitors to provide the power to the battery of the vehicle to be jump started. Once the vehicle is started, the vehicle's electrical system may recharge the batteries and capacitors before the unit automatically electrically disconnects from the vehicle's battery.

BRIEF DESCRIPTION OF THE DRAWINGS

[0008] FIG. **1** is a functional block diagram of the portable power source of the present invention.

[0009] FIG. **2** (divided into FIGS. **2**A, **2**B, **2**C and **2**D) is a schematic of the portable power source, control circuit and sensors of the present invention.

[0010] FIGS. **3-8** are flow charts of the processing steps of the portable power source of the present invention.

[0011] FIG. **9** is a flow chart of the interrupt service routine of the system of the portable power source of the present invention.

DESCRIPTION

[0012] As required, detailed embodiments of the present invention are disclosed herein. However, it is to be understood that the disclosed embodiments are merely exemplary of the invention that may be embodied in various and alternative forms. The figures are not necessarily to scale; some features may be exaggerated or minimized to show details of particular components. Therefore, specific structural and functional details disclosed herein are not to be interpreted as limiting, but merely as a representative basis for the claims and/or as a representative basis for teaching one skilled in the art to variously employ the present invention.

[0013] Moreover, except where otherwise expressly indicated, all numerical quantities in this description and in the claims are to be understood as modified by the word "about" in describing the broader scope of this invention. Practice within the numerical limits stated is generally preferred. Also, unless expressly stated to the contrary, the description of a group or class of materials as suitable or preferred for a given purpose in connection with the invention implies that mixtures or combinations of any two or more members of the group or class may be equally suitable or preferred.

[0014] Referring initially to FIG. **1**, the portable supplemental power source (jump starter) of the present invention is generally indicated by reference numeral **10**. Jump starter **10** includes a programmable microprocessor **12** which receives inputs **14** and produces informational outputs **16** and control outputs **18**. Microprocessor **12** provides flexibility to the system **10** to allow updates to the functionality and system parameters without changing the hardware. In the preferred

EXHIBIT 1005
Petitioner ADC (IPR2024-00577)

embodiment, an **8**-bit microprocessor with 64 k bytes of programmable flash memory is used to control the system **10**. One such microprocessor is the ATmega644P available from Atmel Corporation. The microprocessor **12** may be programmed via an internal connector **90**, or an external connector **92** (see FIG. **2**). It should be understood that other programming ports may be included are not limited to the two shown in the figure.

[0015] A capacitor voltage sensor **49** monitors the voltage level of one or more capacitor **21**. The capacitors **21** may include energy storage modules containing six or more ultracapacitor cells, for example. The capacitor modules **21** may be connected in series to obtain higher operating voltages or in parallel to provide additional energy storage. One such capacitor module is the Boostcap Energy Storage Module available from Maxwell Technologies, Inc.

[0016] A battery voltage sensor **20** monitors the voltage level of one or more jump starter batteries **22**. A reverse voltage sensor **24** monitors the polarity of the jumper cables on line **26** which are connected to the vehicle's electrical system **28**. A vehicle voltage sensor **30** monitors the voltage on line **37** (voltage of the vehicle). When the contacts are open, the solenoid voltage sensor **32** input to microprocessor **12** is used to measure the voltage of the jump starter capacitors **21** and batteries **22**, which may be configured for various jump starter voltages. When the contacts are closed, the voltage difference between the capacitors **21** and batteries **22**, and the contact relay **34** is used to measure the voltage drop across a temperature-and-resistance calibrated 00 AWG shunt cable **36** in order to calculate the current being delivered by the jump starter capacitors **21** and batteries **22** to the vehicle's electrical system **28**. Although the present invention is disclosed and described as temporarily connected to a vehicle, it should be understood that it is equally applicable to a stationary engine. Additionally, the connection method to the electrical system or batteries of the engine to be started is not important and may include conductive clamps, NATO connectors, or may be permanently hardwired to the system, for example.

[0017] A battery temperature sensor **38** monitors the temperature of the jump starter's batteries **22** to detect overheating due to excess current draw from the batteries during jump starting. A shunt cable temperature sensor **40** monitors the temperature of the 00 AWG shunt cable **36** in order to compensate for resistance changes of the shunt cable due to the high current passing through the shunt cable **36** and to detect overheating conditions. The unit **10** also includes automatic **42** and manual **44** pushbutton inputs to accept user input to select either automatic or manual operation.

[0018] The temperature of 00 AWG shunt cable **37** may also be monitored by a temperature sensor or thermal switch **41**. As long as the temperature of the cable **37** is below a predetermined limit, the input on line **58** is passed through sensor **41** to line **59** to enable the contact relay **34** as controlled by system microcontroller **12**. If the temperature of the cable **37** exceeds a predetermined limit, then the temperature sensor **41** presents an open circuit to control line **58** to disable contact relay **34** and not allow power to be applied to the vehicle **28**. It should be understood that the temperature sensor **41** may be coupled to cable **36**, **37** or any other cable that may become overheated. Additional temperature sensors may be used to provide additional protection of the system from overheating.

[0019] A capacitor temperature sensor **47** monitors the temperature of the jump starter capacitors **21** to detect overheating due to excess current draw from the capacitors during jump starting.

[0020] The microprocessor **12** includes several outputs **16** to provide information to the user and to control the application of power to the vehicle to be jump started. An LCD display **46** may be used to display user instructions, error messages, and real-time sensor data during operation of the jump starter **10**. A reverse voltage LED **48** is illuminated when the microprocessor **12** determines that a reverse voltage jumper cable voltage is detected by reverse voltage sensor **24**. An auto mode LED **50** is illuminated when the automatic mode pushbutton **42** is depressed. A manual mode LED **52** is illuminated when the manual mode pushbutton **44** is depressed. If the voltage level of the jump starter batteries **22** drop below a value of twenty percent of the normal level, a charge battery LED **54** is illuminated. The charge battery LED **54** remains illuminated until the batteries **22** are charged to a minimum state of charge such as fifty percent, for example. A fault LED **56** is turned on anytime the microprocessor **12** detects any operational, sensor or internal fault. An audible warning may also be provided **70**. The fault LED **56** remains illuminated until the fault condition is cleared.

[0021] A contact relay control output **58** operates the contact relay **34** through temperature sensor **41**. When the jump starter operation has been successfully initiated, the contact relay **34** is closed and the jump starter capacitors **21** and batteries **22** are connected to the starter system or batteries of the vehicle to be started **28**. The contact relay **34** is opened when a successful start cycle has been completed, a start fault has occurred or the operator interrupts the jump starter cycle. An optional key pad **72** may be included and used for entry of a passcode to operate the unit **10**, or to identify one or more users of the system which may be stored to track user operation. For example, if two different users operate the unit **10** and error conditions are recorded for one of the users, this information may be used to identify training issues that need to be addressed.

[0022] Referring to FIGS. **2**A, **2**B, **2**C, **2**D and **3**-**8**, when the jump starter **10** is initially powered on **200**, the microcontroller **12** initializes the hardware, reads all system parameters and variables, and initializes the interrupt service routine **202** (See FIG. **8**). All stored performance history is read from the onboard, non-volatile memory **204** and a start message is displayed **206** on the LCD display **46**. The history is saved for diagnostic, unit use and safety purposes. The microcontroller **12** then performs a system self-test operation **208** where the LCD **46**, all LEDs **48**, **50**, **52**, **54** and **56**, all sensors **20**, **24**, **30**, **32**, **38**, **40**, the push buttons **42** and **44**, and the system batteries **22** are tested and their status displayed **208** on the LCD **46**. If a fault is detected **400**, an error message is displayed **402** and system operation is halted.

[0023] Once the initialization and self-test operations are completed, the system starts into a main processing loop **210**. An interrupt service routine ("ISR") **500** (FIG. **9**) is also started which constantly monitors all input sensor values and user input buttons. The ISR **500** is periodically called by the microcontroller **502**. A check is made to determine if the serial input buffer flag is set **504**. If the flag is set **504**, then configuration information is read and flags set or cleared **506**. If the output flag is set **508**, the information is transmitted to an external PC and the output buffer flag is cleared **510**. Next, all input parameters are read **512**, and a moving average is

EXHIBIT 1005
Petitioner ADC (IPR2024-00577)

calculated for each parameter **514**. If the PC remote flag is set **516**, all parameters and statuses are copied to the output buffer **518** and the output buffer flag is set **520**. The manual mode AC starting current profile is calculated **522**, all event timer counts are incremented **524**, and the status of the automatic **42** and manual **44** pushbuttons is monitored and set **526**. All calculations, timer counts, and status indications (flags) are stored in the internal memory of the microprocessor **12**.

[0024] At the start of the main process loop **210**, the flags are checked **404** beginning with the shunt calibration flag **406**. If the shunt calibration flag is set **406**, the starter contact relay **34** is closed **408**. The temperature of the shunt cable is measured **410** and the voltage drop across the shunt cable is read **412**. The temperature of the shunt cable is measured a second time and averaged with the previous reading **414**. The shunt resistance is then calculated and saved **416** and the shunt calibration flag is cleared **418**.

[0025] Next, if the flag to upload data to an external PC is set **420**, the information is copied to the output buffer **422**, the output buffer ready flag is set **424**, and the upload data flag is cleared **426**. If the download data from PC flag is set **428**, data is copied from the input buffer **430**, and the download data flag is cleared **432**.

[0026] If the PC remote control flag is set **434**, the remote control status flag is toggled **436**. If the flag is true, the unit **10** can be controlled remotely by a PC or locally by the buttons. If the flag is false, the unit can only be controlled locally.

[0027] If the system does not detect a battery charging voltage **212**, once jumper cables **60** have been manually connected to the vehicle to be started **28**, the voltage is measured by the reverse voltage sensor **24** to determine if the cables have been properly connected to the vehicle **214**. If the voltage measured is significantly less than the voltage of the jump starter capacitors **21** and batteries **22**, then a reverse polarity connection of the jumper cables to the vehicle is determined and an error flag is set and the event saved in non-volatile memory **216**. A "Reverse Polarity" error message is displayed **218** on the LCD **46**, and the reverse voltage LED **48** is illuminated **216**. Any further jump starter action by the operator is ignored until the reverse polarity condition is corrected **220**, at which point processing returns to the start of the main processing loop **210**.

[0028] If the jumper cables **60** are not reverse connected **214**, then the state of charge of the capacitors **21** and batteries **22** is determined **222**. If the voltage level of the system batteries **22** measured by the voltage sensor **30** is equal to a state of charge of eighty percent or more below a fully charged voltage level **222**, an error flag is set and the event recorded in memory **224**. The charge battery LED **54** is illuminated and the LCD **46** displays a "Charge Battery" message **225**. The system stays in this condition, which prohibits any further jump starter action by the operator until a charging voltage is detected **226**, which is great enough to indicate that a battery charger (not shown) has been connected to the batteries **22**.

[0029] If the system has detected a battery charger voltage **212**, a "Battery Charging" message is displayed **228** on the LCD **46**, and the charge LED **54** is illuminated. The voltage profile of the battery **22** is monitored to determine if the charge is complete **230**. A completed charge is determined by monitoring the charging voltage rise to a threshold value then decrease by a predetermined percentage. This voltage peaking and subsequent fall-off is a characteristic of the battery chemistry indicating that the battery has reached its maximum charge capacity. Once the charging has reached a minimum charged level or is completed **230**, the processing returns to the beginning of the main processing loop **210**. The jump starter batteries **22** only need to reach a 50% charge in order for the system to attempt to start the vehicle.

[0030] If the battery or capacitor temperature measured by sensors **38** and **47** rises above a maximum safe threshold **232**, an error flag is set and the event recorded in non-volatile memory **234**. An error message "Battery Over Temperature" or "Capacitor Over Temperature" is displayed **236** on the LCD **46** and the Fault LED **56** is illuminated. The system prevents any further operation until the battery and/or capacitor temperature falls below a safe level **238**. Once a safe temperature is reached, processing returns to a ready state at the beginning of the main processing loop **210**.

[0031] If the voltage of one or more of the capacitors measured by the capacitor voltage sensor **49** exceeds a predetermined limit **239**, such as 2.8 volts, for example, an error flag is set and the event recorded in non-volatile memory **241**. An error message "Capacitor Over Voltage" is displayed **243** and the fault LED **56** is illuminated. Processing then returns to the main processing loop **210**.

[0032] If the temperature of the shunt cable **36** rises above a safe threshold temperature **240**, an error flag is set and the event recorded in memory **242**. An error message "Cable over Temperature" is displayed **244** on the LCD **46** and the Fault LED **56** is illuminated. The system prevents any further operation until the shunt cable temperature falls below a minimum safe temperature **246**. Once a safe temperature is reached, the system returns to a ready state at the beginning of the main processing loop **210**.

[0033] Next, the system checks the status of the automatic **42** and manual **44** push buttons. If neither button has been pushed **248**, a "Ready" message is displayed **250** on the LCD **46** and processing returns to the main processing loop **210**. When no error conditions are detected and no user inputs are being processed, the system remains in the ready mode, and displays a "Ready" text message on the LCD **46**. Other information such as the selected jump starter voltage, the percentage change of the batteries **22**, the temperature of the batteries, and the vehicle voltage, for example, may also be displayed on LCD **46**.

[0034] If one of the push buttons **42** or **44** has been selected, the system will compare the operator-configured starter voltage against the voltage of the vehicle to be started **28**. The jump starter **10** may be configured for 12, 18, 24, 30, 36, 42 or 48 volts, for example, using a selector jumper **55**. For example, if the batteries **23** are both 12-volt batteries, the system may be configured for 12- or 24-volt operation. For example, if jumper **27** is placed across terminals **31**, the 24-volt configuration may be selected. If jumper **29** is placed across terminals **31**, the 12-volt configuration may be selected. If the batteries **23** are 12-volt batteries and a battery **25** is a 6-volt battery, 18- or 30-volt configurations may be provided. For example, if jumper **27** is placed across terminals **31**, the 30-volt configuration may be selected. If jumper **29** is placed across terminals **31**, the 18-volt configuration may be selected. It should be understood that two or more batteries of the same or different voltage levels may be used to meet the voltage requirements of the vehicle to be started. If the difference between the voltage selected and the voltage measured is not within a predetermined range and tolerance **252**, a "Wrong Selector Volts" message is displayed **254** on the LCD **46** and further operation is prohibited until the

EXHIBIT 1005
Petitioner ADC (IPR2024-00577)

correct voltage is selected **256** at which point processing returns to the main processing loop **210**.

[0035] If the selected voltage is within the correct range **252**, then the system determines which button was selected **258**. If the Auto button **42** was pushed, a ninety-second count down timer is started and displayed **260** on the LCD **46**. During this time the system monitors the vehicle voltage **262**. If the system does not detect a voltage drop **264** within 90 seconds **265**, the automatic operation is cancelled and processing returns to the main processing loop **210**. The automatic operation may also be interrupted and canceled by pushing the auto button **267**. If the vehicle voltage drops by twenty percent or more from the initially measured voltage **264**, then the vehicle's starter motor is engaged and is trying to start the vehicle. If the maximum number of start attempts has not been exceeded **266**, the contact relay **34** is closed and the contact relay on timer is started **268**, connecting the jump starter's capacitors **21** and batteries **22** to the vehicle's starting system **28**. The start cycle counter is incremented **270**, a "Jump Starter On" message is displayed **272** along with the average current being drawn, and the Auto Mode LED **50** is illuminated. If the relay on timer expires indicating that the relay **34** has been closed for ninety seconds without a start complete event, the relay **34** is automatically opened by the system to reduce the probability of overheating any component in the jump starter or vehicle.

[0036] The system monitors all input sensors **14** and the current status of the jump starter for possible fault conditions. Upon detection of any fault condition, the system will open the contact relay **34** (if closed), and display a message indicating that a fault has occurred, and what action, if any, should be taken by the operator.

[0037] If the battery temperature exceeds a maximum limit **274**, a battery temperature error count is incremented **276**. The contact relay **34** is opened, a "Battery Temp" error message and temperature is displayed **278** on the LCD **46** and the fault LED **56** is illuminated. Processing returns to the main processing loop **210**.

[0038] If the shunt cable temperature exceeds a maximum limit **280**, a cable temperature error count is incremented **282**. The contact relay **34** is opened, a "Cable Temp" error message and temperature is displayed **278** on the LCD **46** and the fault LED **56** is illuminated. Processing returns to the main processing loop **210**.

[0039] If the system detects a geometric rise in the starting current **284** during the first **16** seconds after the contact relay **34** is closed, a current doubling error count is incremented **286**, a "Battery Explosion" error message is displayed **288** on the LCD **46**, the contact relay **34** is opened and the fault LED **56** is illuminated **290**. The system may be returned to the ready mode if the Automatic button **42** is pressed by the operator **292**, or automatically after five minutes **294**.

[0040] If no current flow is detected by the system **296** indicating that there is an open circuit within the system, an open circuit error count is incremented **298**, an "Open Circuit" error message is displayed **300** on the LCD **46**, the contact relay **34** is opened and the fault LED **56** is illuminated **290**. The system may be returned to the ready mode if the Automatic button **42** is pressed by the operator **292**, or automatically after five minutes **294**.

[0041] If the system detects an increase in the difference between the measured jump starter battery voltage **20** and the voltage measured **30** across the contact relay **34** indicating that one of the jump starter cables has been disconnected **302** from the vehicle's battery or starter system **28** then a jumper cable unplugged error count is incremented **304**, a "Jumper Cable Unplugged" error message is displayed **306** on the LCD **46**, the contact relay **34** is opened and the fault LED **56** is illuminated **290**. The system may be returned to the ready mode if the Automatic button **42** is pressed by the operator **292**, or automatically after five minutes **294**.

[0042] During the jump starting process if the current measured across the shunt cable **36** is greater than a preset maximum current such as **1400** amps for a short period of time such as 500 ms **308**, the over max current error count is incremented **310**, an "Over MAX Starting Current" error message is displayed **312** on LCD **46**, the contact relay **34** is opened and the fault LED **56** is illuminated **290**. The current across the shunt cable **36** is also measured to determine if it exceeds a predetermined current such as 1000 amps for more than a predetermined period of time such as 15 seconds **314**. If this over current condition is determined, an over high current error count is incremented **316**, an "Over High Crank Amps" error message is displayed **318** on the LCD **46**, the contact relay **34** is opened and the fault LED **56** is illuminated **290**. The system may be returned to the ready mode if the Automatic button **42** is pressed by the operator **292**, or automatically after five minutes **294**.

[0043] If the system detects a decrease in the jump starter battery voltage **20**, but does not detect an appreciable current flow through the jump starter, a shunt cable **36** failure is indicated **320**. The shunt cable **36** is a precisely measured and calibrated 00 AWG wire, the temperature of which is monitored **40** and used to calculate the resistance across the length of the cable **36**.

[0044] The voltage drop across the cable **36** is also measured to calculate the current through the shunt cable **36** using Ohm's Law. If the shunt cable **36** fails, the system cannot reliably measure the starting current which would present a safety hazard.

[0045] If the system detects a shunt cable failure **320**, a current shunt error count is incremented **322**, a "Current Shunt Failure" error message is displayed **324** on the LCD **46**, the contact relay **34** is opened and the fault LED **56** is illuminated **290**. The system may be returned to the ready mode if the Automatic button **42** is pressed by the operator **292**, or automatically after five minutes **294**.

[0046] If the system detects a great difference between the vehicle's voltage **30** and the contact relay **34** voltage **326**, the contact relay **34** may have failed indicating an over high starter current condition. A contact relay failure count is incremented **328**, a "Contact Relay Error" message is displayed **330** on the LCD **46**, the contact relay **34** is opened and the fault LED **56** is illuminated **290**. The system may be returned to the ready mode if the Automatic button **42** is pressed by the operator **292**, or automatically after five minutes **294**.

[0047] If manual mode is selected **258**, "Manual" is displayed **332** on the LCD **46**, the system will prompt the operator to press the manual button **44** again. If the manual button **44** is pressed a second time **334**, then the system checks the number of start attempts **266**. If the maximum number of start attempts has been exceeded **266**, an over start attempt error count is incremented **336**, a "Cool Down Unit" message is displayed **338** on the LCD **46**, and the system waits for five minutes for the system to cool **340**. Once the cool down time has expired, processing returns to the main processing loop

EXHIBIT 1005
Petitioner ADC (IPR2024-00577)

210. If the total start attempts have not exceeded the limit **266**, the processing continues at block **268** as described above.

[0048] If in auto mode and the starting current decreases by 20% from the maximum measured current **342**, then the start cycle is complete. A decrease in the starting current indicates that the vehicle has started and its alternator is now generating its own current reducing the demand from the jump starter batteries **22**. If the starting current is below the threshold **342**, a "Start Cycle Complete" message is displayed **344** on LCD **46**, and the contact relay is opened **346**. This message remains displayed until the operator presses the Auto button **292**, or if there is no user activity for five minutes **294**, after which the system returns to the main processing loop **210**.

[0049] If in manual mode, the jump starter **10** may be used when the battery voltage of the vehicle is below **10** volts, or if the vehicle's battery is not connected. In the situation where the vehicle's battery is present but has a voltage of less than 10 volts, the jump starter will start to charge the vehicle's battery before any starting operation begins. If the vehicle's battery is extremely low or completely dead, once the contactor is closed, the jump starter's batteries will start to charge the batteries. The current will rise sharply and then start to decrease, but this does not indicate that a start attempt has been made or that the vehicle's starter motor has been cranked. The algorithm looks for this initial increase and then decrease in the delivered current and then waits for a minimum of three alternating current cycles indicating that the vehicle's starter has been engaged. Due to the compression/decompression cycles of the pistons, the starting current will rise and fall in a generally sinusoidal pattern. The algorithm looks for this so that it knows that the vehicle's starter motor has been activated. Once this alternating current cycle has been detected, if the current then decreases by approximately twenty percent and remains low, this indicates a start complete, the contactor is opened, the start complete message is displayed and then the system waits for the Auto button to be pushed or the 5 minute timeout.

[0050] If the vehicle's battery holds the charge, then the starting cycle in manual mode is the same as described above for automatic mode. If the battery does not hold the charge or if no battery is present, the system waits until the vehicle's starter motor is engaged. Once the vehicle's starter motor is engaged and the engine is turning over, the system **10** monitors the jump starter current flow. As the engine turns over the jump starter's current increases and decreases with the compression stroke of the engine's pistons. During a piston's compression cycle, the current from the jump starter's batteries **22** increases due to the increased power demand of the starter motor. During a piston's decompression cycle, the current flow decreases due to the decreased power demand of the starter motor. This current increase and decrease is generally sinusoidal which is recognized by the system.

[0051] Once the system has detected three more sinusoidal current flow cycles, the same 20% decrease threshold in current as set forth above for the automatic mode determination, may be used to determine when the vehicle's engine has started **348**. If the engine has started, the "Start Cycle Complete" message is displayed **344** on the LCD **46** and the contact relay opened **346**.

[0052] If the engine has not been started **348**, the system next checks the relay closed time. If the maximum time set for the contact relay to be closed has expired **350**, a "Maximum Starter On" message is displayed **352** on the LCD **46** and the contact relay is opened **346**.

[0053] If the contact relay closed time has not expired, the system checks for a cycle halt flag. Any cycle may be interrupted by the Auto button being pressed by the operator. If the Auto button is pressed **354**, a "Start Cycle Halted" message is displayed **356** on the LCD **46**, and the contact relay opened **346**.

[0054] At the completion of a start cycle the jump starter **10** has opened the contact relay **34** and the message "Start complete" is displayed **46**, and the starting current is displayed for diagnostic assessment of the vehicle's starting system. At this time the voltage of the vehicle **28** is monitored. Normal vehicle charging voltages fall within certain ranges for 12, 18, 24, 30, 36, 42 and 48 volts systems. The jump starter displays the running vehicle's voltage and makes an assessment to determine if the vehicle's generated voltage is actually great enough to charge the vehicle's battery. If the voltage is below a threshold for charging the vehicle's battery, the jump starter displays "Vehicle Not Charging" message and shows the measured voltage. If the vehicle's generated voltage is great enough to charge the vehicle's battery, the jump starter displays "Vehicle Charging" showing a working vehicle charging system and displays the vehicle charging voltage.

[0055] Referring to FIGS. **1** and **2**, a diode **35** may be connected across the contact **34** to charge the capacitors **21** and jump starter batteries **22** from the vehicle charging system **28**. The charging system of the vehicle may be used to charge the capacitors **21** and jump starter batteries **22**. Whenever the vehicle has a working charging system this will occur as long as the cables are connected to the vehicle. This allows the capacitors **21** and jump starter batteries **22** to be fully recharged in about 1 to 5 minutes and can therefore start many vehicles in a row without becoming discharged. Even in situations in which the jump starter batteries **22** may be discharged to an extent that they alone may not be able to provide the necessary power to start a vehicle, the capacitors **21** may be rapidly recharged to start many vehicles in a row. This is very useful when starting fleets of vehicles with dead batteries.

[0056] It is to be understood that while certain forms of this invention have been illustrated and described, it is not limited thereto, except in so far as such limitations are included in the following claims and allowable equivalents thereof.

Having thus described the invention, what is claimed as new and desired to be secured by Letters Patent is:

1. A method for delivering supplemental power from a portable jump starter to an engine comprising the steps of:

positioning said portable jump starter proximate the engine;

temporarily manually connecting conductive leads from said portable jump starter to the electrical system of the engine;

automatically selecting a voltage output of one or more system batteries housed in said portable jump starter and one or more system capacitors housed in said portable jump starter,

verifying the polarity of the conductive leads;

providing an alert if said polarity is incorrect;

assessing the voltage level of said electrical system;

applying power from said system batteries and said system capacitors to said electrical system;

monitoring the current output of said system batteries and said system capacitors;

measuring one or more voltage levels to determine one or more fault conditions;

EXHIBIT 1005
Petitioner ADC (IPR2024-00577)

examining the current through a shunt cable; and

electrically disconnecting said conductive leads from said electrical system when the engine starts.

2. The method of claim **1** including determining the temperature of said shunt cable.

3. The method of claim **2** wherein if said temperature reaches a predetermined limit, electrically disconnecting said conductive leads from said electrical system.

4. The method of claim **2** including calculating the resistance of said shunt cable.

5. The method of claim **4** including calibrating said shunt cable.

6. The method of claim **1** wherein said selecting step includes selecting a voltage from the group consisting of 12 volts, 18 volts, 24 volts, 30 volts, 36 volts, 42 volts and 48 volts.

7. The method of claim **6** wherein said voltage is 18 volts or 30 volts.

8. The method of claim **1** wherein said verifying step includes comparing the voltage level of said electrical system to the voltage level of said supplemental battery.

9. The method of claim **1** wherein said assessing step includes charging an engine battery connected to said electrical system if the voltage of said engine battery is below a predetermined level.

10. The method of claim **9** including the step of monitoring a charging voltage of said system batteries and said capacitors.

11. The method of claim **10** wherein when said charging voltage rises to a threshold value and then decreases by a predetermined percentage, charging of said engine battery is complete.

12. The method of claim **1** wherein said assessing step includes comparing the voltage level of said electrical system to a supplement power voltage setting, whereas if the difference between said electrical system voltage and said supplement power voltage setting is greater than a predetermined limit, indicating a fault condition.

13. The method of claim **1** wherein said applying step includes closing a relay.

14. The method of claim **1** wherein said applying step includes recording operational data.

15. The method of claim **1** wherein said applying step includes recording the number of start attempts.

16. The method of claim **13** wherein said applying step includes starting a timer.

17. The method of claim **16** wherein said applying step includes opening said relay upon expiration of said timer.

18. The method of claim **1** wherein said monitoring step includes monitoring the temperature of said system batteries.

19. The method of claim **18** wherein if a temperature limit is reached electrically disconnecting said conductive leads from said electrical system.

20. The method of claim **18** wherein if a temperature limit is reached electrically disconnecting said conductive leads from said electrical system to reduce the risk of fire.

21. The method of claim **1** wherein if said current through said shunt cable exceeds a first limit within a first period, electrically disconnecting said conductive leads from said electrical system.

22. The method of claim **21** wherein if said current through said shunt cable exceeds a second limit within a second period, electrically disconnecting said conductive leads from said electrical system.

23. The method of claim **1** wherein if said current through said shunt cable geometrically increases over a predetermined period, electrically disconnecting said conductive leads from said electrical system.

24. The method of claim **1** wherein said electrically disconnecting step includes opening a relay.

25. The method of claim **1** wherein said electrically disconnecting step includes recharging said system batteries and said system capacitors for a predetermined time before opening a relay to electrically disconnect said conductive leads from said electrical system.

26. A portable jump starter for delivering supplemental power to an engine comprising:

a pair of conductive leads for temporarily connecting the jump starter to an electrical system of the engine;

one or more jump starter batteries;

one or more jump starter capacitors connected in parallel to said one or more jump starter batteries;

a relay connected to said conductive leads;

a shunt cable connecting said jump starter batteries and said jump starter capacitors to said relay; and

a processor for controlling said relay to selectively apply electrical power from said jump starter batteries and said jump starter capacitors to said electrical system of the engine.

27. The jump starter of claim **26** further comprising a voltage sensor for measuring the voltage level of said one or more jump starter batteries and said one or more capacitors.

28. The jump starter of claim **26** further comprising a voltage sensor coupled to said one or more capacitors for detecting an over voltage condition of said one or more capacitors.

29. The jump starter of claim **26** further comprising a reverse voltage sensor for measuring the difference between the voltage level of said one or more jump starter batteries and said one or more capacitors and the voltage level of the electrical system.

30. The jump starter of claim **26** further comprising a relay voltage sensor for measuring the voltage across said relay.

31. The jump starter of claim **26** further comprising a battery temperature sensor for measuring the temperature of said one ore more jump starter batteries.

32. The jump starter of claim **26** further comprising a shunt cable temperature sensor for measuring the temperature of said shunt cable.

33. The jump starter of claim **26** further comprising a sensor for measuring the current through said shunt cable.

34. The jump starter of claim **26** further comprising a sensor for measuring the voltage across said shunt cable.

35. The jump starter of claim **26** further comprising a display coupled to said processor to provide instructions and status information about said jump starter.

36. The jump starter of claim **26** further comprising a plurality of indicators coupled to said processor to provide status information.

37. The jump starter of claim **26** further comprising a keypad coupled to said processor for providing input to said processor and controlling operational access to the jump starter.

38. The jump starter of claim **26** further comprising a thermal switch coupled to said shunt cable and electrically coupled to said relay, whereas if a temperature of said shunt cable exceeds a predetermined limit, said thermal switch

EXHIBIT 1005
Petitioner ADC (IPR2024-00577)

interrupts power to said relay thereby electrically disconnecting said conductive leads from said system batteries.

39. The jump starter of claim **26** further comprising a voltage output selector coupled to said one or more jump starter batteries and said one or more capacitors for selectively providing a voltage output of 12, 18, 24, 30, 36, 42 or 48 volts.

40. The jump starter of claim **26** further comprising a diode connected across said relay to permit charging of said one or more jump starter batteries and said one or more capacitors by said electrical system.

* * * * *

EXHIBIT 1005
Petitioner ADC (IPR2024-00577)