US 20170275980A1

(19) United States

(12) Patent Application Publication

(10) Pub. No.: US 2017/0275980 A1

(43) Pub. Date: Sep. 28, 2017

Kajaria

(54) SYSTEMS AND METHODS FOR FRACTURING A MULTIPLE WELL PAD

(71) Applicant: **GE Oil & Gas Pressure Control LP**, Houston, TX (US)

(72) Inventor: **Saurabh Kajaria**, Houston, TX (US)

(73) Assignee: **GE Oil & Gas Pressure Control LP**, Houston, TX (US)

(21) Appl. No.: **15/471,919**

(22) Filed: **Mar. 28, 2017**

Related U.S. Application Data

(63) Continuation-in-part of application No. 15/343,463, filed on Nov. 4, 2016.

(60) Provisional application No. 62/314,001, filed on Mar. 28, 2016.

Publication Classification

(51) **Int. Cl.**

E21B 43/26	(2006.01)
F16L 55/07	(2006.01)
E21B 33/068	(2006.01)

(52) **U.S. Cl.**

CPC *E21B 43/26* (2013.01); *E21B 33/068* (2013.01); *F16L 55/07* (2013.01)

(57) **ABSTRACT**

A flow system for use at a hydraulic fracturing well site, including a tree attached to a wellhead, an inlet head in fluid communication with at least one hydraulic fracturing pump at the well site, and an adjustable fluid conduit providing fluid communication between the inlet head and the tree. The flow system further includes a valve in the fluid conduit and having an open position and a closed position, the valve permitting fluid flow through the fluid conduit when in the open position, and preventing fluid flow through the fluid conduit when in the closed position, at least a portion of the fluid conduit positioned between the valve and the tree.

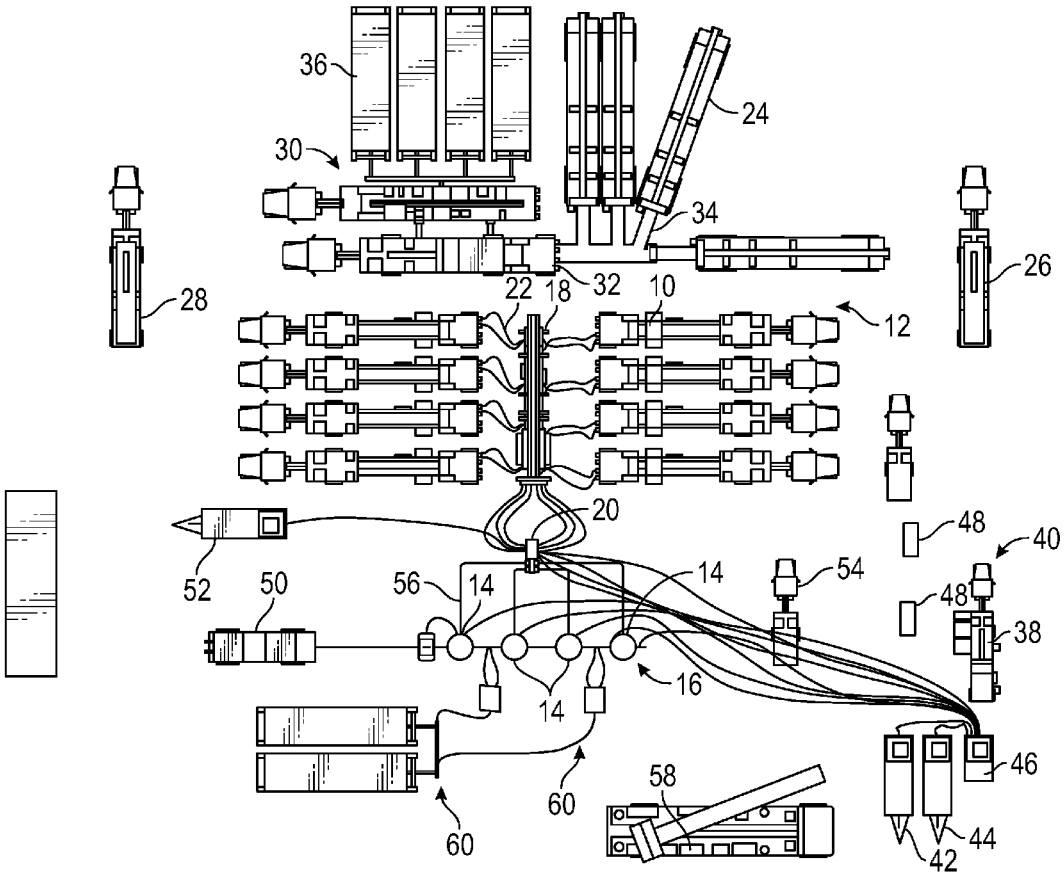

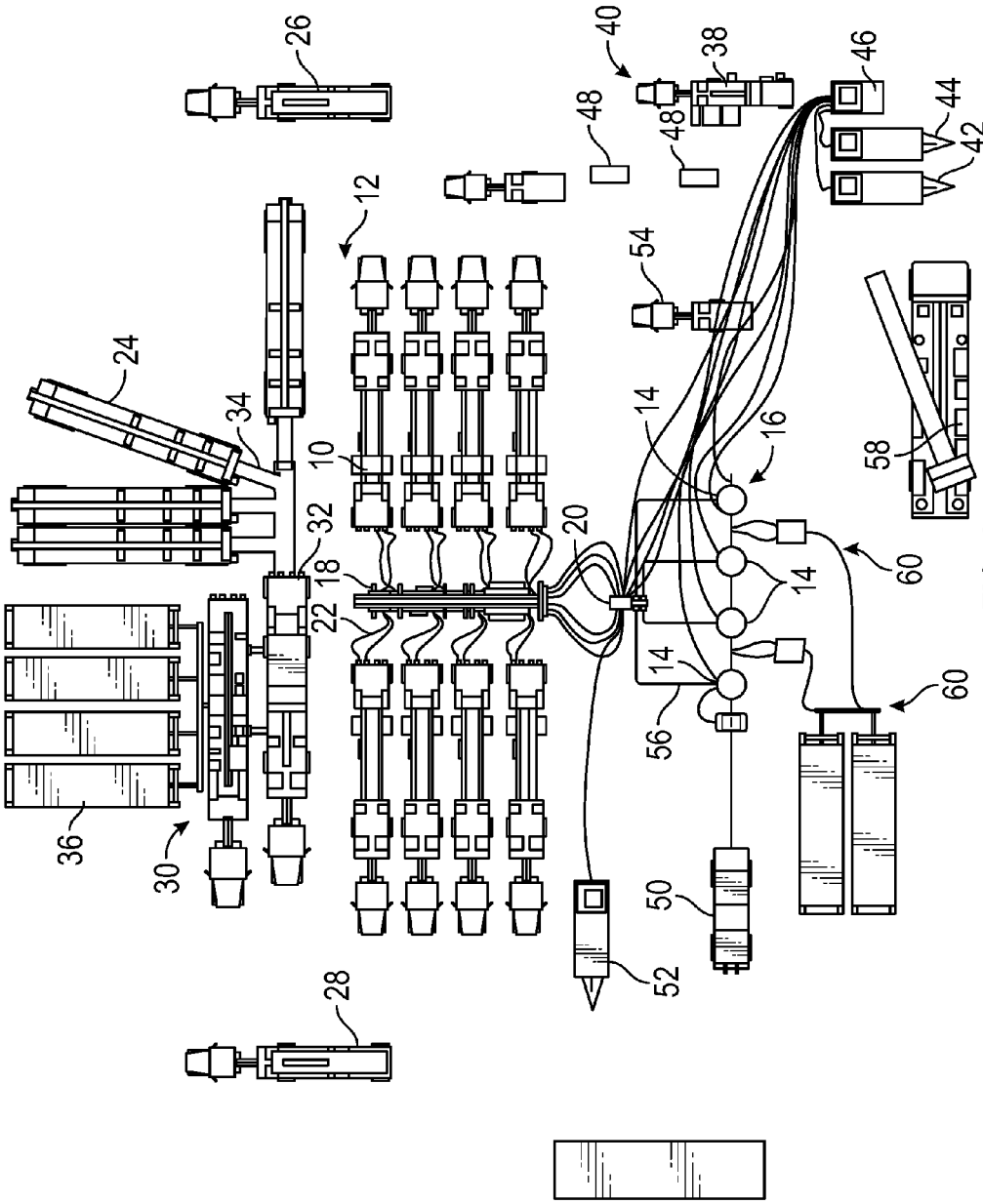
26
40
38
46
48
48
44
42
12
54
24
34
14
16
58
10
32
20
18
22
14
60
14
60
56
36
30
50
52
28

FIG. 1

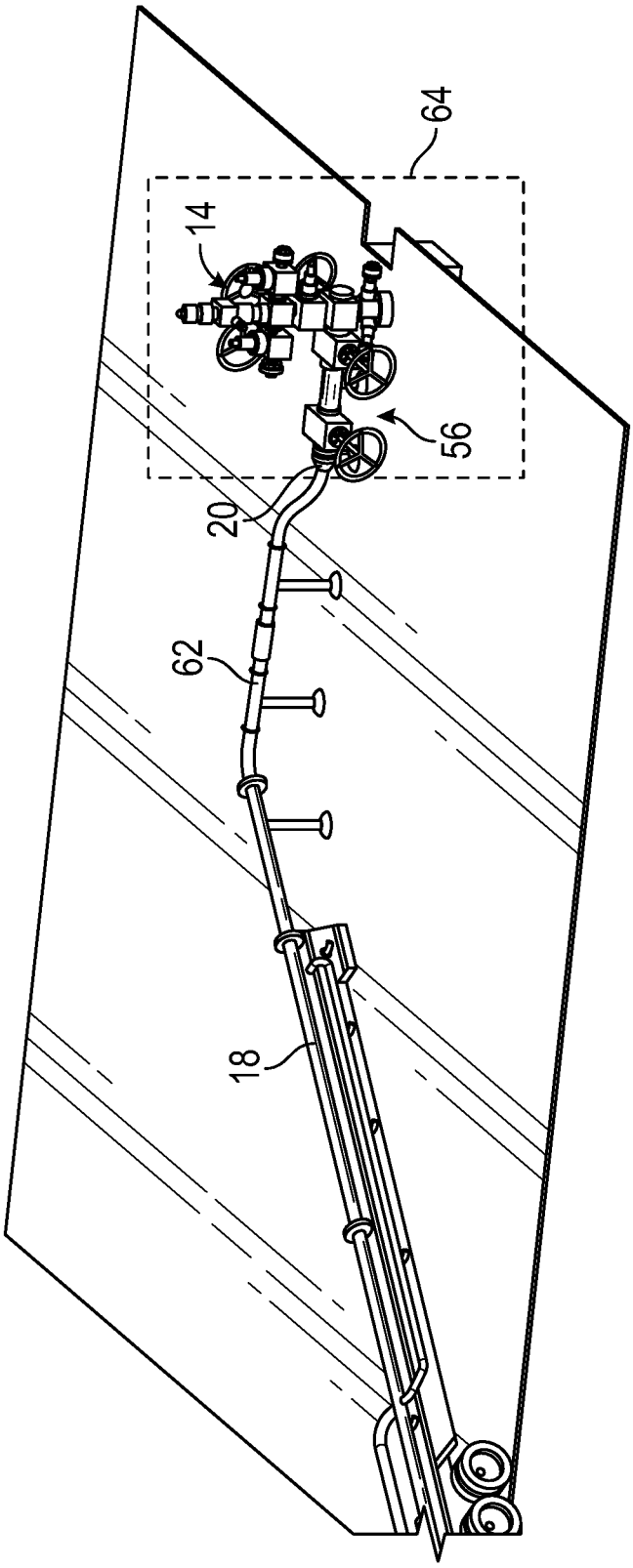

FIG. 2

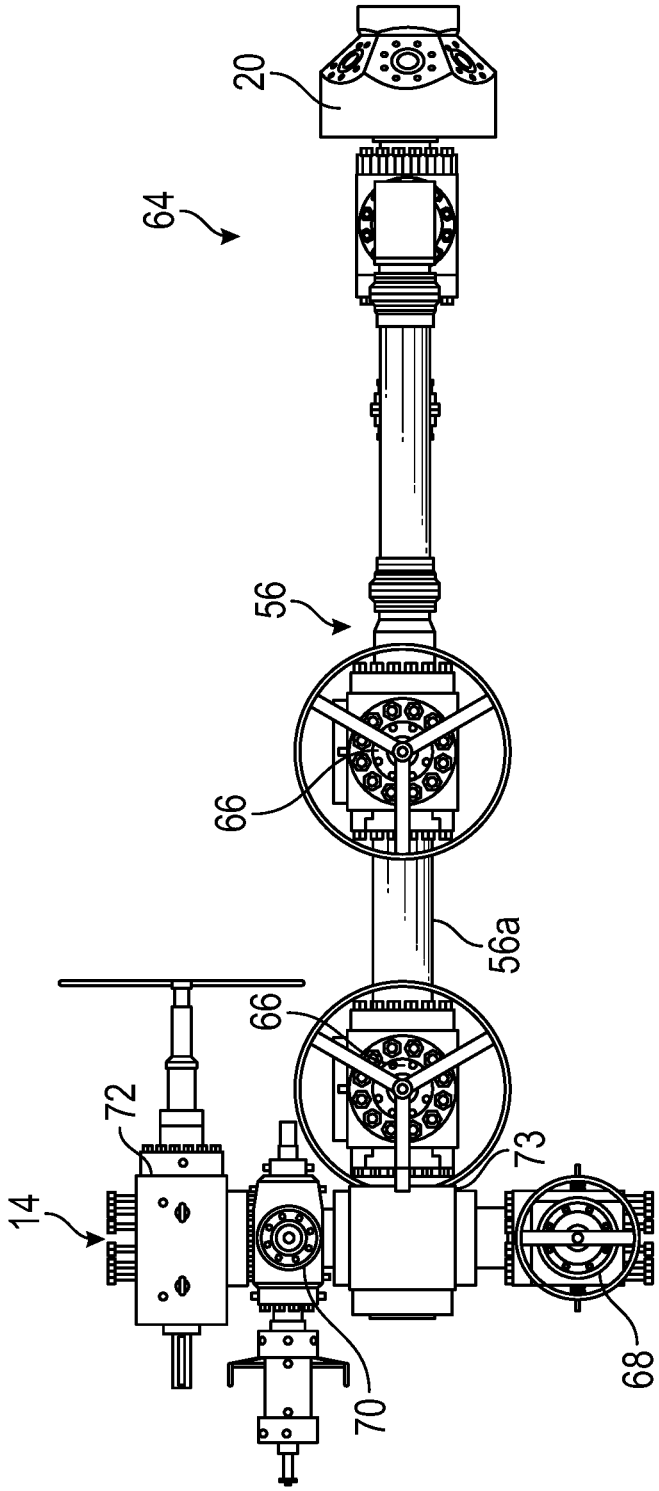

FIG. 3

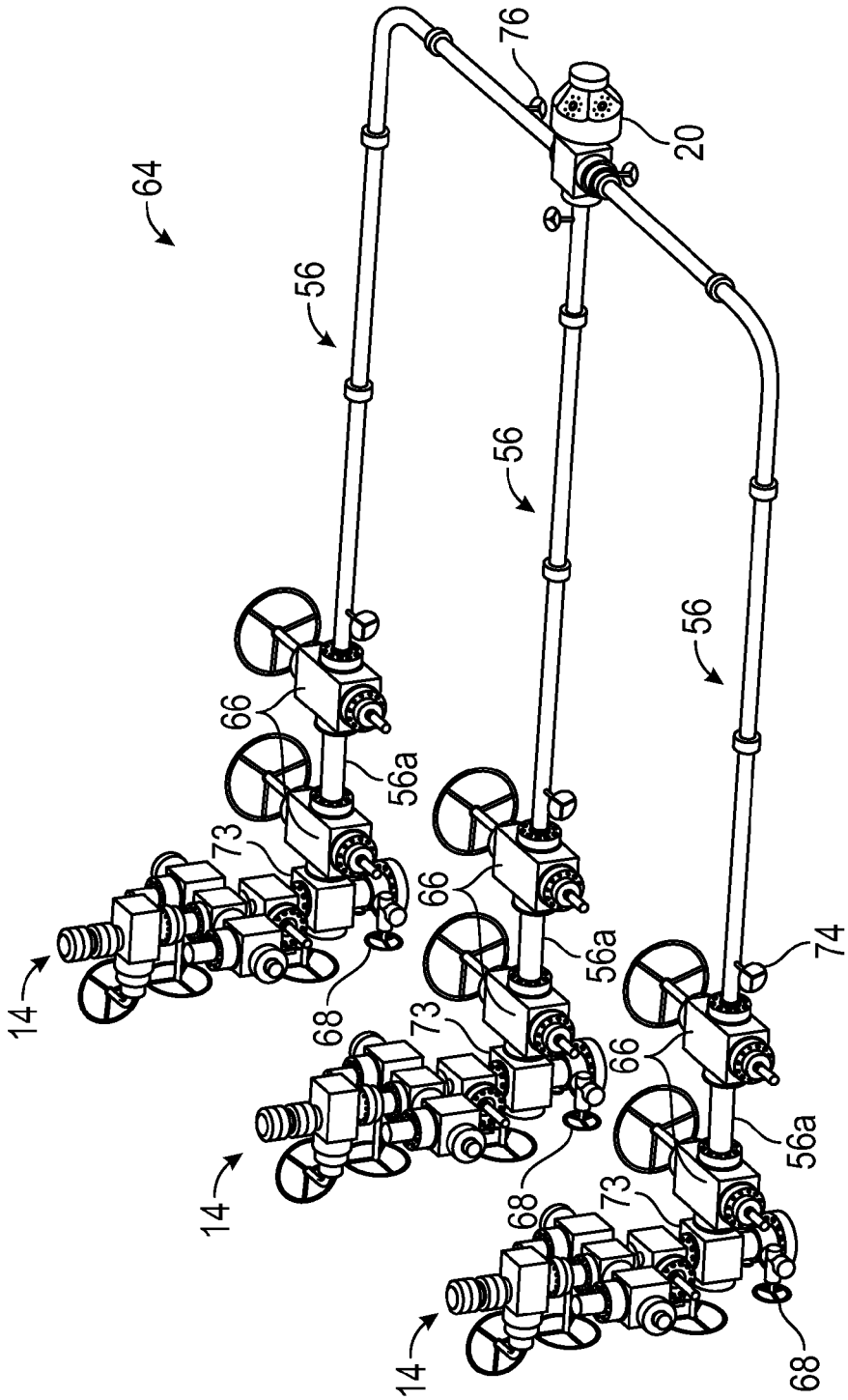

FIG. 4

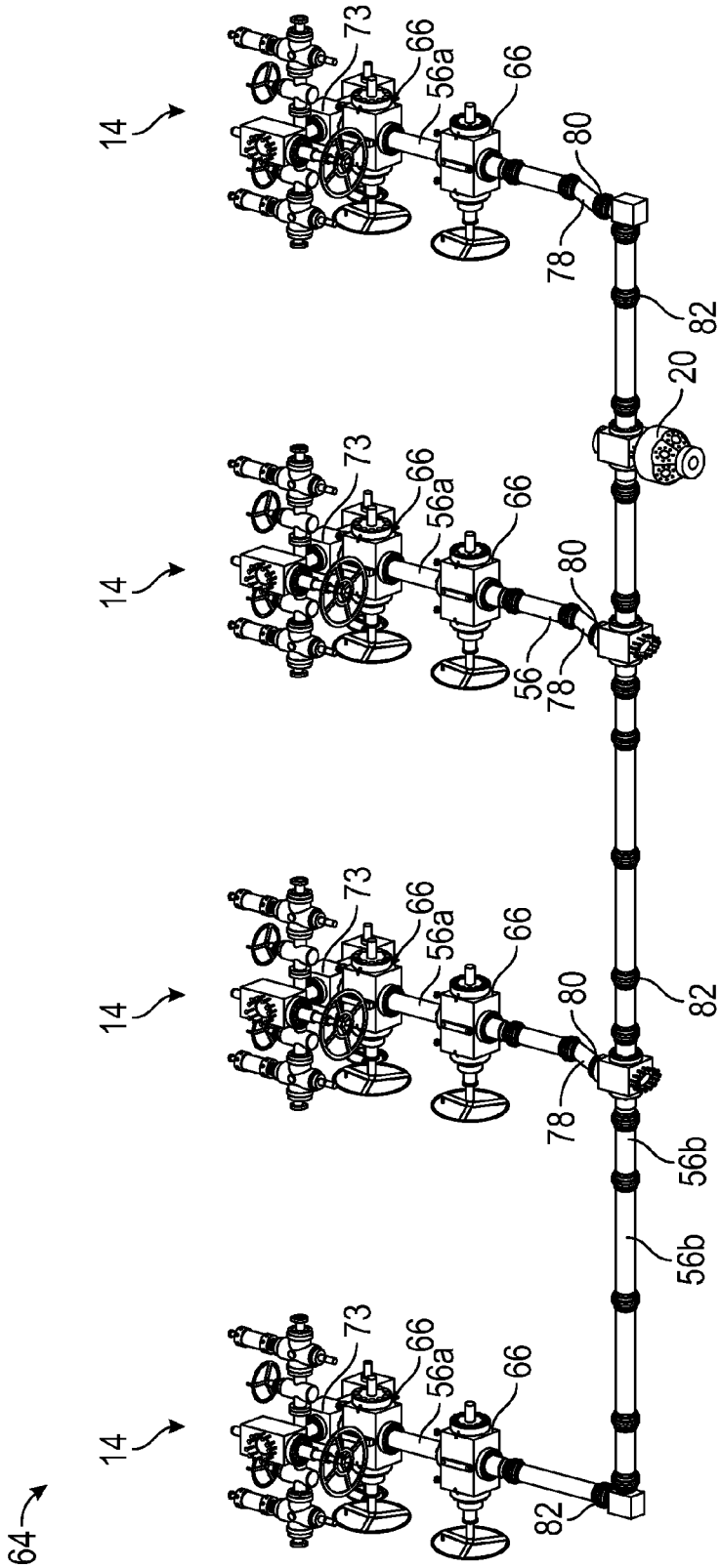

FIG. 5

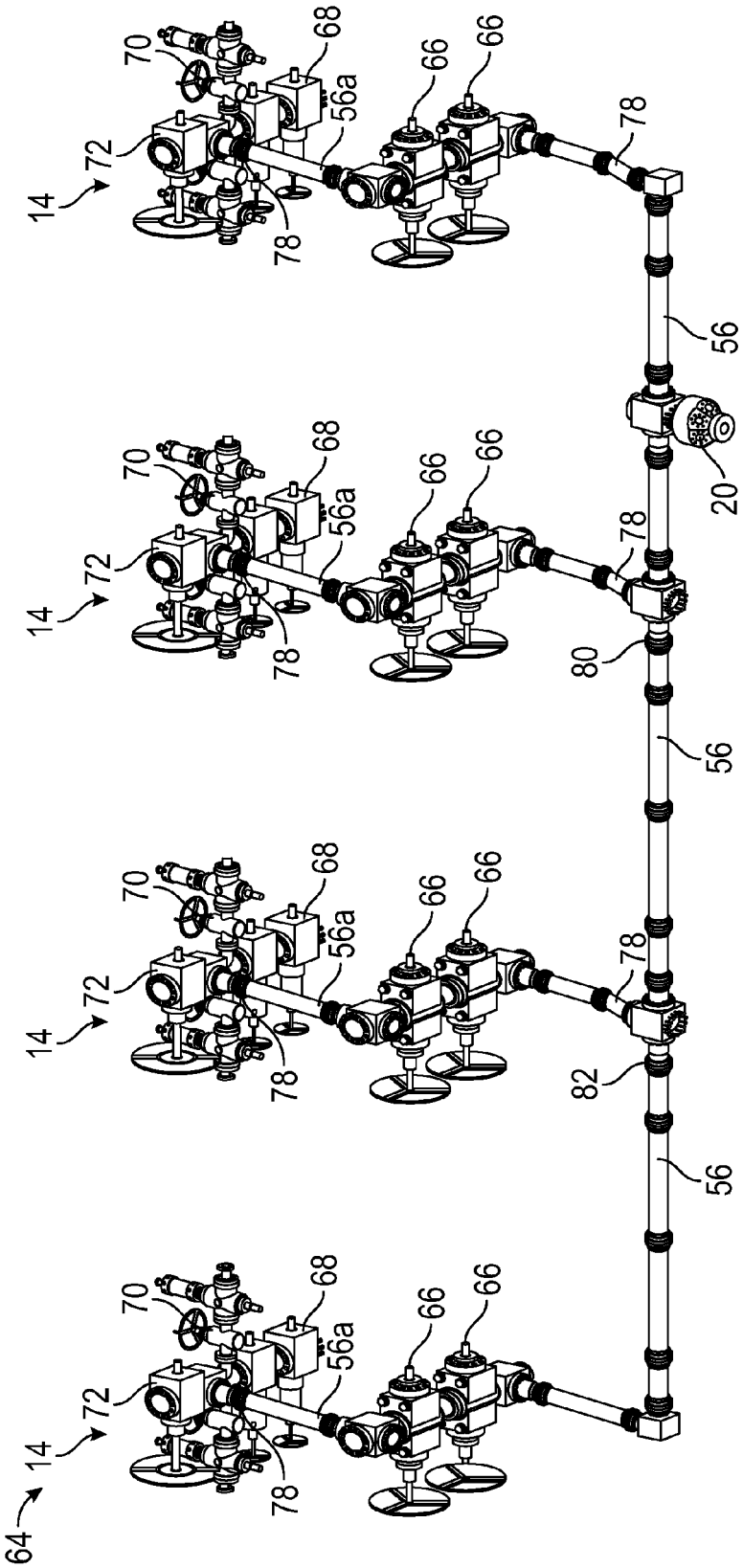

FIG. 6

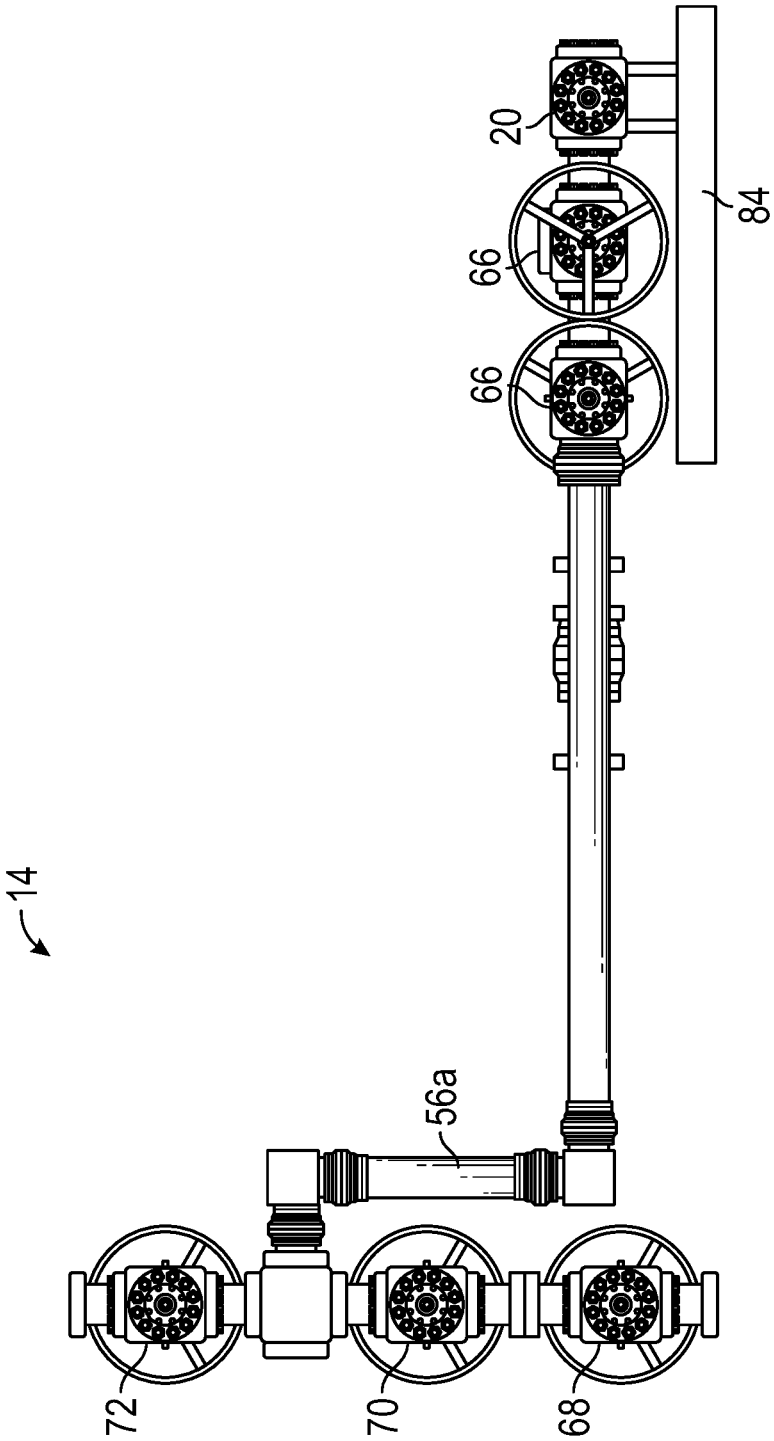

FIG. 7

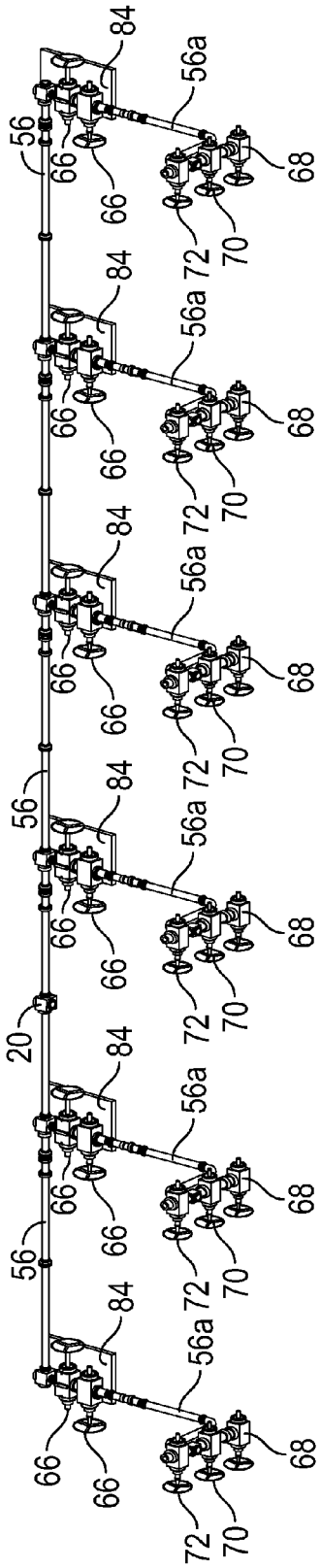

FIG. 8

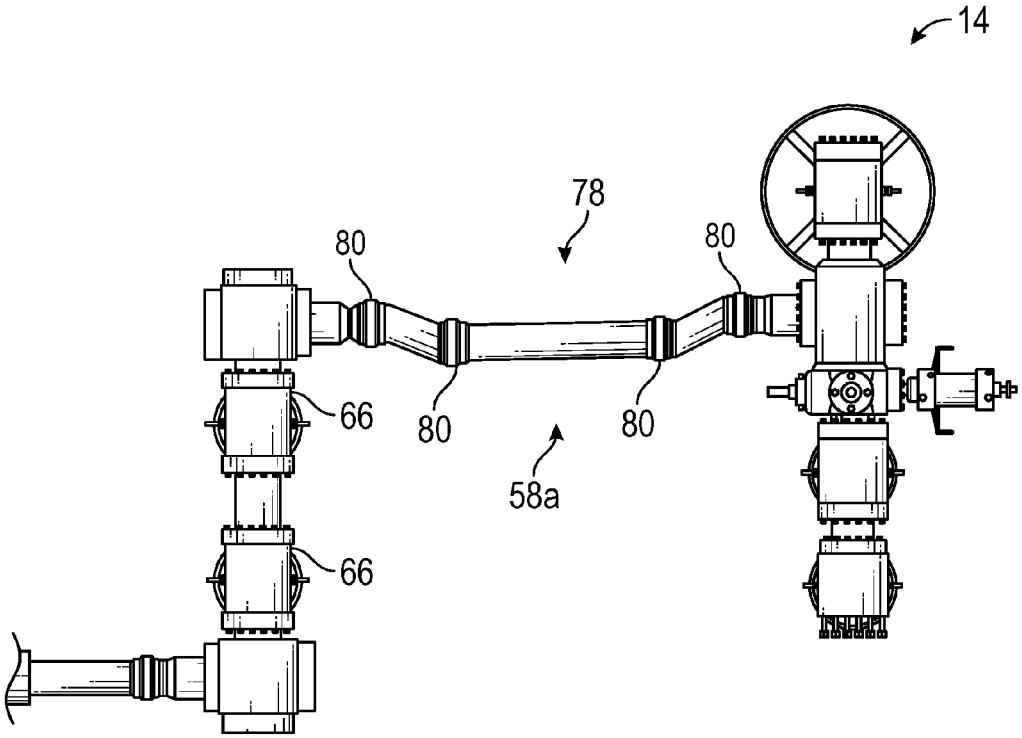

FIG. 9

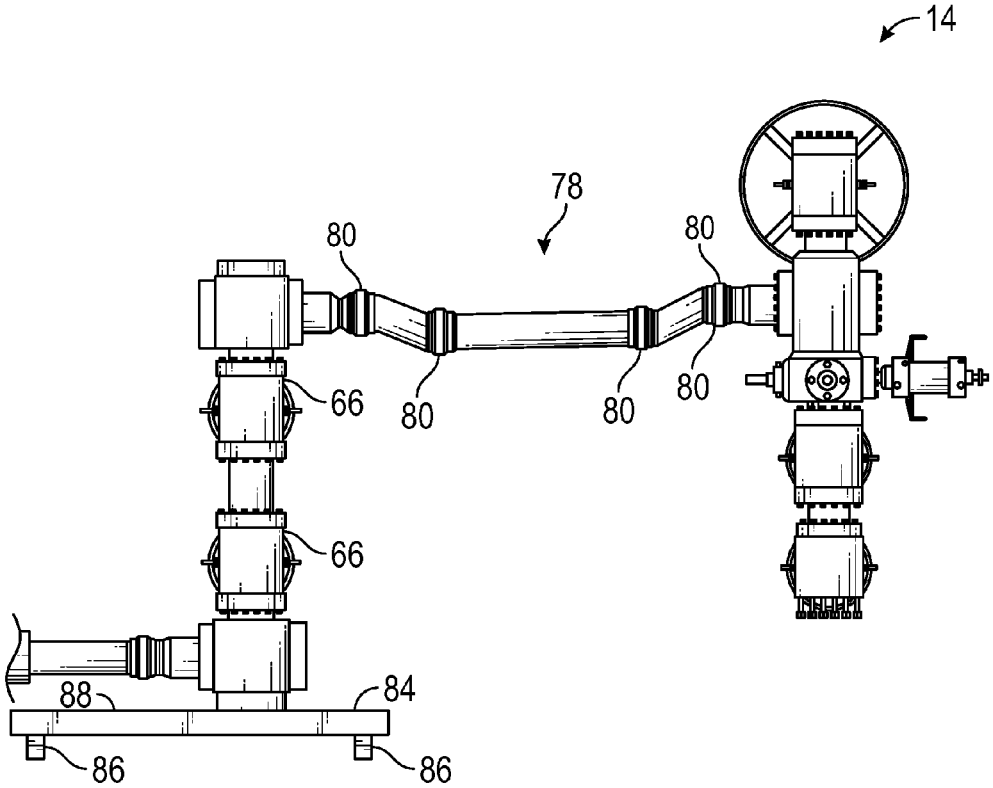

FIG. 10

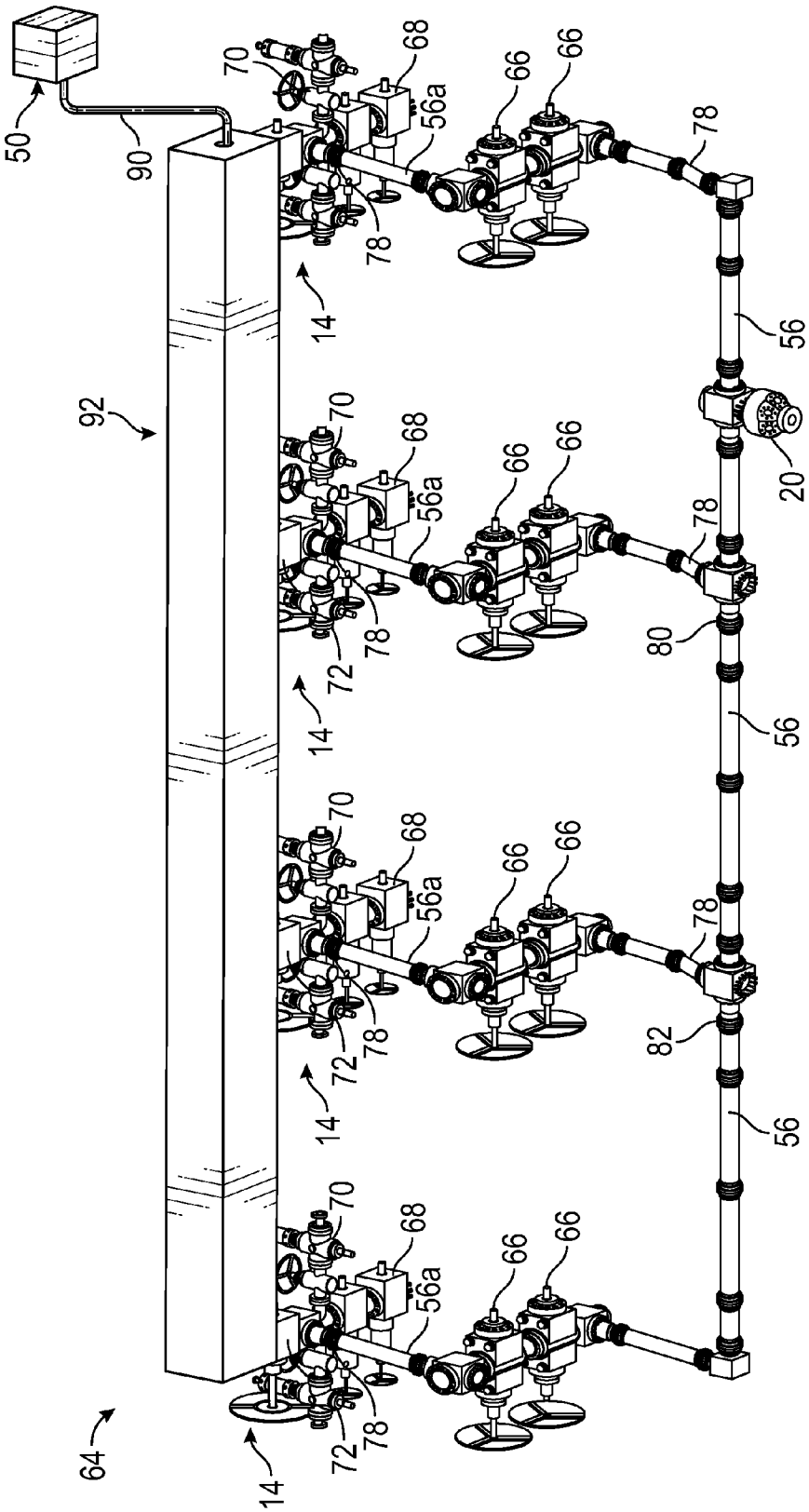

FIG. 11

SYSTEMS AND METHODS FOR FRACTURING A MULTIPLE WELL PAD

CROSS REFERENCE TO RELATED APPLICATIONS

[0001] This application claims priority to and the benefit of, co-pending U.S. Provisional Application Ser. No. 62/314,001, filed Mar. 28, 2016, the full disclosure of which is hereby incorporated herein by reference in its entirety for all purposes. This application is a continuation-in-part of co-pending U.S. patent application Ser. No. 15/343,463, titled "Systems and Methods for Fracturing a Multiple Well Pad," filed Nov. 4, 2016, the full disclosure of which is hereby incorporated by reference in its entirety for all purposes.

BACKGROUND

[0002] 1. Field of Invention

[0003] This invention relates in general to equipment used in the hydrocarbon industry, and in particular, to systems and methods for hydraulic fracturing operations.

[0004] 1. Description of the Prior Art

[0005] Hydraulic fracturing is a technique used to stimulate production from some hydrocarbon producing wells. The technique usually involves injecting fluid, or slurry, into a wellbore at a pressure sufficient to generate fissures in the formation surrounding the wellbore. The fracturing fluid slurry, whose primary component is usually water, includes proppant (such as sand or ceramic) that migrate into the fractures with the fracturing fluid slurry and remain to prop open the fractures after pressure is no longer applied to the wellbore. Typically hydraulic fracturing fleets include a data van unit, blender unit, hydration unit, chemical additive unit, hydraulic fracturing pump unit, sand equipment, and other equipment.

[0006] The fluid used to fracture the formation is typically pumped into the well by high-powered hydraulic fracturing pumps. The pumps in typical fracing operations pump the fluid to a frac pump output header, also known as a missile, which in turn passes the fluid to a hydraulic fracturing manifold. The hydraulic fracturing manifold is located between the missile and a tree (assortment of valves and controls) located above the opening of a well bore. A plurality of dedicated fluid supply lines can connect the hydraulic fracturing manifold to a plurality of wells, with one supply line connected to a tree corresponding to each well. With this arrangement, an operator can use the hydraulic Fracturing manifold to isolate wells as they complete a frac cycle, and to redirect fluid to a different well that is ready to begin a new frac cycle. In some instances, actuated valves can improve transition time, increasing efficiency. Use of a hydraulic fracturing manifold in this manner is known in the industry as "zip" fracking.

[0007] One disadvantage to typical hydraulic fracturing spreads is that, when servicing multiple wells, the hydraulic fracturing, or zipper manifold, is typically located near the missile, and some distance from some or all of the wells. Thus, piping connecting the manifold to the trees of individual wells can be lengthy, and include many turns and bends. Such turns and bends lead to inefficiencies, and often require couplings and fittings that add possible failure points to the system.

SUMMARY

[0008] One aspect of the present technology provides a flow system for use at a hydraulic fracturing well site. The flow system includes a tree attached to a wellhead, an inlet head in fluid communication with at least one hydraulic fracturing pump at the well site, and fluid conduit providing fluid communication between the inlet head and the tree. The flow system further includes a valve in the fluid conduit and having an open position and a closed position, the valve permitting fluid flow through the fluid conduit when in the open position, and preventing fluid flow through the fluid conduit when in the closed position, at least a portion of the fluid conduit positioned between the valve and the tree.

[0009] Another aspect of the present technology provides a flow system for use at a hydraulic fracturing well site. The flow system includes a plurality of trees, each tree attached to a wellhead, an inlet head in fluid communication with at least one hydraulic fracturing pump at the well site, and a fluid conduit providing fluid communication between the inlet head and the plurality of trees, and including expandable conduit segments joined by connectors. The flow system further includes a plurality of valves in the fluid conduit, each valve corresponding to one of the plurality of trees, each valve having an open position and a closed position, each valve permitting fluid flow through the fluid conduit when in the open position, and preventing fluid flow through the fluid conduit when in the closed position, at least a portion of the fluid conduit positioned between at least one of the plurality of valves and its corresponding tree.

[0010] Yet another aspect of the present technology provides a method of providing pressurized fluid to a plurality of wells at a hydraulic fracturing well site. The method includes the steps of pressurizing fluid with at least one hydraulic fracturing pump, directing the fluid from the at least one hydraulic fracturing pump to a fluid conduit through an inlet head, and selectively directing the fluid into a well via the fluid conduit by opening and closing fluid communication between the at least one hydraulic fracturing pump and the at least one of the wells using valves positioned in the fluid conduit and corresponding to each of the plurality of wells. The method further includes the step of directing the fluid into a tree attached to the wellhead by attachment of the fluid conduit to the tree at a location adjacent the master service valve of the tree.

BRIEF DESCRIPTION OF THE DRAWINGS

[0011] The present technology will be better understood on reading the following detailed description of non-limiting embodiments thereof, and on examining the accompanying drawings, in which:

[0012] FIG. **1** is a schematic environmental view of a hydraulic fracturing site, in accordance with an embodiment of the present technology;

[0013] FIG. **2** is a perspective view of a single wellhead fluid delivery system, in accordance with an embodiment of the present technology;

[0014] FIG. **3** is a side view of a wellhead fluid delivery system, in accordance with an embodiment of the present technology;

[0015] FIG. **4** is a perspective view of a multiple wellhead fluid delivery system, in accordance with an embodiment of the present technology;

[0016] FIG. **5** is a perspective view of an alternate embodiment of a multiple wellhead fluid delivery system, in accordance with an embodiment of the present technology;

[0017] FIG. **6** is a perspective view of another alternate embodiment of a multiple wellhead fluid delivery system, in accordance with an embodiment of the present technology;

[0018] FIG. **7** is a side view of a wellhead fluid delivery system, in accordance with an alternate embodiment of the present technology;

[0019] FIG. **8** is a perspective view of a wellhead fluid delivery system, in accordance with an embodiment of the present technology;

[0020] FIG. **9** is a side view of a wellhead fluid delivery system, in accordance with an embodiment of the present technology;

[0021] FIG. **10** is a side view of a wellhead fluid delivery system, in accordance with an embodiment of the present technology; and

[0022] FIG. **11** is a perspective view of another alternate embodiment of a multiple wellhead fluid delivery system, in accordance with an embodiment of the present technology.

DETAILED DESCRIPTION OF THE INVENTION

[0023] The foregoing aspects, features and advantages of the present technology will be further appreciated when considered with reference to the following description of preferred embodiments and accompanying drawings, wherein like reference numerals represent like elements. In describing the preferred embodiments of the technology illustrated in the appended drawings, specific terminology will be used for the sake of clarity. The invention, however, is not intended to be limited to the specific terms used, and it is to be understood that each specific term includes equivalents that operate in a similar manner to accomplish a similar purpose.

[0024] Embodiments of the present disclosure are directed to systems and methods for coupling manifolds to trees at well sites. Flow systems may include an inlet head to direct fluid toward a configuration that is coupled to one or more trees at the well site. Fluid conduits are positioned between valves to enable blocking of fluid flow to a particular tree of a plurality of trees, but to enable flow to other trees. In this manner, selective flow to the trees may be utilized to control, for example, fracturing operations. In embodiments, the fluid conduits include "S" spool configurations with rotating flanges to adjust a position of the flanges in an x, y, and z-direction, thereby enabling coupling of components when certain fittings are not exactly aligned and increasing flexibility at the well site. Moreover, the fluid conduits may include expansion joints to adjust a length of the fluid conduit for a given operation or line configuration. As such, increased flexibility for coupling connections at the well site may be provided.

[0025] FIG. **1** shows a schematic environmental view of equipment used in a hydraulic fracturing operation. Specifically, there is shown a plurality of pumps **10** mounted to vehicles **12**, such as trailers. The pumps **10** are fluidly connected to trees **14** attached to wellheads **16** via a missile **18**, which is in turn connected to an inlet head **20**. As shown, the vehicles **12** can be positioned near enough to the missile **18** to connect fracturing fluid lines **22** between the pumps **10** and the missile **18**.

[0026] FIG. **1** also shows equipment for transporting and combining the components of the hydraulic fracturing fluid or slurry used in the system of the present technology. In many wells, the fracturing fluid contains a mixture of water, sand or other proppant, acid, and other chemicals. A non-exclusive list of possible examples of fracturing fluid components includes acid, anti-bacterial agents, clay stabilizers, corrosion inhibitors, friction reducers, gelling agents, iron control agents, pH adjusting agents, scale inhibitors, and surfactants. Historically, diesel fuel has at times been used as a substitute for water in cold environments, or where a formation to be fractured is water sensitive, such as, for example, slay. The use of diesel, however, has been phased out over time because of price, and the development of newer, better technologies.

[0027] In FIG. **1**, there are specifically shown sand transporting containers **24**, an acid transporting vehicle **26**, vehicles for transporting other chemicals **28**, and a vehicle carrying a hydration unit **30**. Also shown is a fracturing fluid blender **32**, which can be configured to mix and blend the components of the hydraulic fracturing fluid, and to supply the hydraulic fracturing fluid to the pumps **10**. In the case of liquid components, such as water, acids, and at least some chemicals, the components can be supplied to the blender **32** via fluid lines (not shown) from the respective components vehicles, or from the hydration unit **30**. In the case of solid components, such as sand, the components can be delivered to the blender **32** by conveyors **34**. The water can be supplied to the hydration unit **30** from, for example, water tanks **36** onsite. Alternately, water can be provided directly from the water tanks **36** to the blender **32**, without first passing through the hydration unit **30**.

[0028] Monitoring equipment **38** can be mounted on a control vehicle **40**, and connected to, e.g., the pumps **10**, blender **32**, the trees **14**, and other downhole sensors and tools (not shown) to provide information to an operator, and to allow the operator to control different parameters of the fracturing operation. Other hydraulic fracturing well site equipment shown in FIG. **1** can include a greasing unit **42**, a flushing unit **44**, and RFOC **46**, accumulators **48**, Wireline **50**, a test unit **52**, trunk lines **54**, and fluid conduit **56**. The system may also include a crane **58**, and flow back equipment **60**, such as a choke manifold, plug catcher, desander, separator, and flares.

[0029] Referring now to FIG. **2**, there is shown more specifically the portion of the hydraulic fracturing system that delivers fluid from the hydraulic fracturing pumps **10** to each wellhead **16**. In particular, FIG. **2** shows the missile **18**, the inlet head **20**, and the fluid line connecting the missile **18** to the inlet head **20**. FIG. **2** also shows the tree **14** and fluid conduit **56** connecting the inlet head **20** to the tree **14**. One aspect of the present technology shown and described herein is the flow system **64**, which includes the fluid conduit **56** between the inlet head **20** and the tree **14**. In the embodiment of FIG. **2**, as well as other embodiments described herein and shown in the drawings, both the fluid line connecting the missile **18** to the inlet head **20**, the inlet head **20** itself, and the fluid conduit **56** connecting the inlet head **20** to each well is large enough to carry the entire fluid volume and flow required to fracture a well. Moreover, in the embodiments shown and described, only one conduit is required per well to provide the fluid needed to fracture the well.

[0030] FIG. **3** shows an enlarged side view of the flow system **64** according to one embodiment of the present

technology, including inlet head **20**, tree **14**, and fluid conduit **56**. Fluid conduit **56** connects, and provides a fluid conduit, between the inlet head **20** and the tree **14**. Fluid conduit **56** also includes at least one valve **66** capable of regulating fluid flow through the fluid conduit **56** between the inlet head **20** and the tree **14**. The at least one valve **66**, or combination of valves **66**, can alternate between an open position, a closed position, and a partially open position. When in the open position, fluid flow through the fluid conduit **56** is unrestricted. When in the closed position, fluid flow through the fluid conduit **56** is prevented by the valve **66**. When in the partially open position, fluid flow through the fluid conduit **56** is restricted, but not wholly prevented. The valves **66** can be controlled manually or remotely.

[0031] The tree **14** shown in FIG. **3** includes multiple parts, including a series of tree valves. Such tree valves may include, but are not limited to, a master valve **68**, wing valves **70**, and a swab valve **72**. Although a single master valve **68** is shown in FIG. **3**, some trees **14** may include both upper and lower master valves. Similarly, although details of the wing valves **70** are not shown in FIG. **3**, there may be multiple wing valves, including, for example, a kill wing valve and a production wing valve.

[0032] The flow system **64** of the present technology includes fluid conduit **56** and valves **66** that are separate and distinct from the tree **14** and tree valves **68**, **70**, and **72**. In fact, in many embodiments, at least a portion of the fluid conduit **56***a* is positioned between at least one of the valves **66** and the tree **14**. One advantage to this arrangement is that fluid flow through the fluid conduit **56** can be controlled and/or stopped, as desired by an operator, independent of the tree **14** before the flow reaches the tree **14**. This feature is especially advantageous at a wellsite containing multiple wells, as shown in FIG. **4**. Coupling **73** connects the fluid conduit **56***a* to the tree **14**, and can have the ability to rotate to allow rotation of the tree **14** relative to the well and the fluid conduit **56** as needed or desired by an operator. This allows the operator to adjust the radial alignment of the trees so that the planes of the flange faces are coincident or parallel to each other.

[0033] FIG. **4** depicts a flow system **64** that includes an inlet head **20**, and fluid conduit connecting the inlet head **20** to multiple trees **14**, each associated with a well. The particular portion of the fluid conduit **56** between the inlet head **20** and each tree **14** includes at least one valve **66** capable of regulating flow through the fluid conduit **56** between the inlet head **20** and that particular tree **14**. Similar to the embodiment shown in FIG. **3** and discussed above, the at least one valve **66**, or combination of valves **66**, associated with each tree **14** can alternate between an open position, a closed position, and a partially open position. When in the open position, fluid flow through the fluid conduit **56** is unrestricted, and will enter the well, as desired by the operator. When in the closed position, fluid flow through the fluid conduit **56** is prevented by the valve **66**. When in the partially open position, fluid flow through the fluid conduit **56** is restricted, but not wholly prevented.

[0034] The flow system **64** includes valves **66** that are separate and distinct from the trees **14** and from all valves associated with and/or attached to the trees **14**. In fact, in many embodiments, at least a portion of the fluid conduit **56***a* is positioned between at least one of the valves **66** and the corresponding tree **14** to that valve **66** or series of valves **66**. One advantage to this arrangement is that fluid flow through the fluid conduit **56** can be controlled and/or stopped, as desired by an operator, independent of the tree **14** before the flow reaches the tree **14**.

[0035] One reason the ability to allow or prevent flow before the flow reaches a particular tree **14** is advantageous is because it allows an operator to easily direct flow between wells at a multi-well site as needed in the course of operations. For example, different wells might operate on different cycles in a hydraulic fracturing operation. Thus, it may be desirable to provide pressurized fluid to a particular well at a particular time or place in the frac cycle, while simultaneously stopping the flow of fluid into another well that is in a different place in the frac cycle. With the flow system **64** of the present technology it is possible direct flow between wells continuously simply by opening or closing the valves **66** associated with individual wells. Thus, the flow of pressurized fluid into wells can be managed efficiently. In addition, while flow to a tree **14** is stopped, due to the closing of the corresponding valve **66**, valves on the tree can be operated to allow the operator to insert a line, frac isolation ball, etc. as needed.

[0036] Another advantage to the flow system **64** of the present technology is a reduction in the amount of piping and other iron needed to manage flow between the hydraulic fracturing pumps **10** and multiple wells. For example, at conventional hydraulic fracturing drilling sites, separate piping may be run all the way from the missile **18** to each individual well. Depending on the size of the operation and the number of wells at the site, this conventional arrangement can lead to a great quantity of piping, and each pipe may contain many bends, turns, and connections to accommodate an indirect path between the pumps **10** and a well.

[0037] In stark contrast, the flow system **64** of the present technology provides an inlet head **20** that can be connected to the missile **18** by a single pipe, and that can be located proximate a group of wells. The fluid conduit **56** of the flow system **64** is then required to connect the inlet head **20** and the individual trees **14** over a relatively short distance, and with a relatively low number of bends, turns, and connections. Although the corners of the fluid flow lines are shown in the figures as a single segment with an approximate 90 degree angle, bends in the fluid flow lines can be formed with single segments at angles other than 90 degrees, or can be made up of multiple segments that together form a bend or corner. This arrangement accordingly provides a decrease in set up time, as well as fewer maintenance issues.

[0038] Also shown in the flow system **64** of FIG. **4** is a fresh water inlet **74** and a flush port **76**. Such fresh water inlet **74** and flush port **76** can be located proximate to the valves **66** and the inlet head **20**. With the valves **66** closed and no pressurized fluid being delivered to the fluid conduit **56** from the inlet head **20**, fresh water can be injected through the fresh water inlet **74**, flow through the fluid conduit **56**, and exit at the flush port **76**. This process will replace the contents of the fluid conduit **56** with fresh water, flushing any sand and other solids and fluids from the fluid conduit **56**. In some alternate embodiments, the positions of the fresh water inlet **74** and the flush port **76** can be switched.

[0039] Referring now to FIG. **5**, there is shown an embodiment of the present technology where the flow system **64** includes multiple trees **14** attached to individual wells. As in embodiments described above, fluid conduit **56** connects the inlet head **20** with each tree **14**, and valves **66** are positioned

to isolate or connect each tree **14** to pressurized fluid in the fluid conduit **56** as desired by an operator.

[0040] FIG. **5** also shows the versatility of the present technology in servicing well sites having any formation. For example, the fluid conduit **56** may be tailored to any configuration necessary to connect the inlet head **20** to the trees **14**. The fluid conduit **56** may include expandable or telescoping segments **56***b*, capable of length adjustment to accommodate variable distances between trees **14** and between the inlet head **20** and trees **14**. The expandable joints can have a maximum length and minimum length and can be set at any of an infinite number of lengths between the maximum length and the minimum length. In addition, the fluid conduit **56** may include "S" spools **78** with rotating flanges **80** to accommodate height adjustments. Furthermore, in certain embodiments, the ends of the "S" spools **78** may not be flanged and could include quick connect fittings, for example. This feature may be useful when wells associated with a common flow system **64** are positioned at different elevations. Thus, the combination of telescoping segments **56***b* and "S" spools **78** with rotating flanges **80** compensates for variances between a site plan and actual spacing between the wells. In addition, these features add adjustability, modularity, and scalability to the system. Support structure, such as struts and braces, can be spaced at various locations along each of the fluid flow lines and used to support the fluid flow lines. Additional structure can be added to provide fall protection around the location of each of the wells.

[0041] Additional advantageous features of the flow system **64** include couplings and positioning of the inlet head **20** relative to the trees **14**. For example, the couplings **82** between fluid conduit **56** segments can consist of any appropriate type of connector, and are not required to be flange connectors. In some embodiments, the couplings **82** may be quick connect-type clamp connectors, thereby allowing for quick assembly and disassembly of the flow system **64**. In addition, in the embodiments shown in FIGS. **5** and **6**, the inlet head **20** is not linearly aligned with individual trees **14**. Specifically, the inlet head **20** is attached to individual fluid conduit sections that run perpendicular to the longitudinal axis of the inlet head **20**, so that the fluid within the fluid conduit **56** changes direction upon flow into the fluid conduit **56** from the inlet head **20**. This feature is useful to reduce or prevent packing in the conduits adjacent the valves **66** and trees **14**.

[0042] The embodiments of FIGS. **3-5** depict flow systems **64** having multiple valves **66** for each tree **14**, wherein the valves **66** are positioned in series on a common horizontal plane. Moreover, in each of these embodiments, the fluid conduit **56** is shown to intersect the tree **14** at a relatively low position, adjacent the lower master valve **68**. This configuration is beneficial because it slows easier access to the valves **66** for adjustment and management of the overall flow system **64**. For example, with the valves **66** located adjacent the lower master valve **68** of each tree **14**, an operator standing on the ground can typically access the valves **66** to make adjustments and to open and close valves. This allows operation of the flow system **66** without the need for scaffoldings or other platforms, thereby eliminating a safety risk to the operators. Additional embodiments of the present technology, however, contemplate alternative fluid conduit and valve arrangements.

[0043] For example, the flow system **64** of FIG. **6** includes valves **66** associated with each tree **14** that are not located on the same horizontal plane, but that are stacked one above another. As a result, the portion of the fluid conduit **56***a* positioned between the valves **66** and each tree **14** connects to the tree **14** at a position above the wing valves **70**, adjacent the swab valve **72**. Such a configuration may be desirable depending on the specific layout and/or geography of a well site. As discussed above with respect to alternate embodiments, the embodiment of FIG. **6** can include fluid conduit **56** having "S" spools **78** with rotating flanges **80** to accommodate height adjustments. This feature may be useful when wells associated with a common flow system **64** are positioned at different elevations. "S" spools **78** can also be used, for example, between the valves **66** and their respective trees **14**, to account for height differences between the a tree **14** and the uppermost valve **66**, as will be described below.

[0044] FIGS. **7** and **8** show yet another embodiment of the flow system **64** of the present technology. In this embodiment, the valves **66** are positioned in series **66** on the same horizontal plane, but the portion of the fluid conduit **56***a* between the valves **66** and the tree **14** is dogged upward so that it intersects the tree above the wing valves **70** adjacent the swab valve **72**. This embodiment may be advantageous where there is a need for the inlet of the fluid conduit **56** into the tree **14** to be positioned high, adjacent the swab valve **72**, but the valves **66** are desired to be located low, so they can be accessed by an operator without use of a scaffolding or platform. Also shown in FIGS. **7** and **8** is an optional skid **84** to support the flow system **64**. Such a skid **84** may be used in the flow systems **64** of any embodiment described herein, and may be useful to solidify the footing of the flow system **64** at a well site.

[0045] FIG. **9** illustrates another embodiment of the fluid conduit **56***a* arranged between a vertical fracturing manifold including a pair of valves **66**. However, it should be appreciated that the vertical fracturing manifold may include a single valve **66** or multiple valves, and may also include additional auxiliary components, such as tie ins for instrumentation, bleeder valves, and the like. The fluid conduit **58***a* includes the "S" spool **78** having the rotating flanges **80**. In embodiments where the inlet to the tree **14** is at a vertical position higher than the outlet to the vertical fracturing manifold, the rotating flanges **80** of the "S" spool **78** may be used to adjust the connection between the vertical fracturing manifold and the tree **14**. For example, if the inlet to the tree **14** is at a lower position, the flanges **80** may be rotated to reduce the vertical elevation of the "S" spool **78**, relative to a ground plane, to enable coupling of the fluid conduit **56***a* between the vertical fracturing manifold and the tree **14**. As described above, in certain embodiments the fluid conduit **56***a* may include expandable joint segments **56***b* describe above. Accordingly, the connection between the vertical fracturing manifold and the tree **14** may be adjusted in each of the x, y, and z directions in order to facilitate coupling of the fluid conduit **56***a*.

[0046] FIG. **10** illustrates another embodiment of the fluid conduit **56***a* connecting the vertical fracturing manifold to the tree **14**, when the vertical fracturing manifold is arranged on the skid **84**. In the embodiment illustrated in FIG. **10**, the skid **84** is an adjustable skid. The skid **84** includes legs **86** that are positioned on the ground plane to enable vertical adjustment of a top portion **88** of the skid **84**. In other words,

the legs **86** may be telescopic and expand and contract relative to the top portion **88**. In certain embodiments, the skid **86** includes an elevation adjustment device, such as a motor in the form of a linear actuator. Additionally, the legs **86** may include pins and apertures to enable individual adjustment of the top portion **88**. That is, the legs **86** may be arranged within a sleeve that includes a series of apertures at different relative elevations. In certain embodiments, the legs **86** include one or more corresponding apertures to align with the apertures on the sleeve such that a pin can be inserted through the apertures to lock the legs **86** in place. Also, in certain embodiments, the legs **86** may include the pin as a spring-loaded device that drives outwardly through the apertures when aligned with the apertures of the sleeve. As such, the vertical position of the outlet of the fracturing manifold may be adjusted to facilitate connection to the tree **14**.

[0047] FIG. **11** illustrates an embodiment of the flow system **64** including the wireline unit **50**. Certain features have been omitted for clarity, but in operation the wireline unit **50** may include a packoff/line wiper, grease head, head catcher, lubricator, and the like to direct the wireline into the wellhead **16**. In operation, hydraulic fracturing may be performed in several stages. A wire **90** may be introduced into the wellhead **16**. The wire **90** may be a braided wire that includes an electrical cable to enable transmission of information into and out of the wellbore. The wire **90** may be introduced into the wellhead **16** along with a plug. The wire **90** directs the plug to a specified location in the wellbore and then activates the plug to form a seal between other portions of the wellbore. Fracturing fluid may be introduced into the well and a ball or other mechanism may be dropped to block flow of the fracturing fluid past the plug. Thereafter, the high pressure fracturing fluid may fracture the well to provide improved flow characteristics and enable recovery of hard to reach or unconventional hydrocarbons. The wire **90** is removed from the wellbore after the plug or multiple plugs are in position. In certain embodiments, personnel are not positioned near the wellhead **16** when the fracturing operation is underway due to potential safety concerns. As such, operations at the well site may be slowed when several trees **14** are arranged adjacent one another, as operations are halted on adjacent trees **14** when one well is undergoing fracturing operations.

[0048] In the illustrated embodiment, the plurality of trees **14** include a wireline controller **92**. The wireline controller **92** enables remote operation of the wireline unit **50**. In the illustrated embodiment, the wireline controller **92** is positioned on each of the trees **14**. Accordingly, the wire **90** may be moved between adjacent trees **14** via the wireline controller **90**. It should be appreciated that in certain embodiments each tree **14** of the plurality of trees may have a separate wireline controller **92**. Advantageously, fracturing operations at one well can be performed while plugging operations are done in an adjacent well, via the wireline controller **92**. Moreover, because the wireline controller **90** may be controlled remotely, personnel will not be on site while the fracturing operations are being performed.

[0049] In embodiments, the wireline controller **90** may include a quick connect to couple at least a portion of the wireline unit to the wellhead. Moreover, in embodiments, the wireline controller **90** may also include a quick connect adapter. The quick connect and/or quick connect adapter may be coupled to the plurality of trees **14**. Additionally, the quick connect may enable remote connection and disconnection of at least a portion of the wireline unit **50** from the quick connect adapter to enable movement of the wireline unit **50** to an adjacent tree **14** of the plurality of trees **14**. In embodiments, the quick connect adapter includes a means to pressure test a portion of the wireline unit, such as a portable pressure testing unit, and to drain hydraulic fluids from at least a portion of the wireline unit.

[0050] Although the technology herein has been described with reference to particular embodiments, it is to be understood that these embodiments are merely illustrative of the principles and applications of the present technology. It is therefore to be understood that numerous modifications may be made to the illustrative embodiments and that other arrangements may be devised without departing from the spirit and scope of the present technology as defined by the appended claims.

That claimed is:

1. A flow system for use at a hydraulic fracturing well site, comprising:

a tree attached to a wellhead;

an inlet head in fluid communication with at least one hydraulic fracturing pump at the well site;

fluid conduit providing fluid communication between the inlet head and the tree; and

a valve in the fluid conduit and having an open position and a closed position, the valve permitting fluid flow through the fluid conduit when in the open position, and preventing fluid flow through the fluid conduit when in the closed position, at least a portion of the fluid conduit positioned between the valve and the tree having one or more connectors to adjust an elevation of the portion of fluid conduit relative to the tree.

2. The flow system of claim **1**, wherein the fluid conduit comprises expandable conduit segments joined by connectors, the expandable conduit sections increasing or decreasing a length of the fluid conduit along an axis.

3. The flow system of claim **1**, wherein the flow system further comprises rotatable couplings between the fluid conduit and the tree to allow for radial adjustment of the tree about an axis of the tree.

4. The flow system of claim **1**, wherein the valve is a pair of valves, and a portion of the fluid conduit is positioned between the tree and at least one of the valves.

5. The flow system of claim **4**, wherein the pair of valves are positioned in series in a common vertical plane.

6. The flow system of claim **5**, wherein the pair of valves are arranged to form a vertical fracturing manifold and an outlet of the vertical fracturing manifold is at a lower elevation than an inlet of the tree.

7. The flow system of claim **1**, wherein the pair of valves are arranged to form a vertical fracturing manifold and an outlet of the vertical fracturing manifold is at a higher elevation than an inlet of the tree.

8. The flow system of claim **1**, wherein the tree is a plurality of trees attached to a plurality of wellheads, and wherein the fluid conduit provides fluid communication between the inlet head and each of the plurality of trees.

9. A flow system for use at a hydraulic fracturing well site, comprising:

a plurality of trees, each tree attached to a wellhead;

an inlet head in fluid communication with at least one hydraulic fracturing pump at the well site;

a fluid conduit providing fluid communication between the inlet head and the plurality of trees, and including rotatable couplings between the fluid conduit and the plurality of trees to allow for vertical adjustment between connectors on a tree of the plurality of trees and connectors on the fluid conduit; and

a plurality of valves in the fluid conduit, each valve corresponding to one of the plurality of trees, each valve having an open position and a closed position, each valve permitting fluid flow through the fluid conduit when in the open position, and preventing fluid flow through the fluid conduit when in the closed position, at least a portion of the fluid conduit positioned between at least one of the plurality of valves and its corresponding tree.

10. The flow system of claim **9**, further comprising:

a wireline unit positioned at the well site, a portion of the wireline unit connected to the wellhead using a quick connect; and

a quick connect adapter coupled to the plurality of trees, the quick connect remotely connecting or disconnecting a portion of the wireline unit from the quick connect adapter attached to the plurality of trees enabling movement of the wireline unit to an adjacent tree of the plurality of trees; and

the quick connect adapter having means to pressure test a portion of the wireline unit and drain hydraulic fluids from a portion of the wireline unit.

11. The flow system of claim **9**, wherein the inlet head has a longitudinal axis, and the fluid conduit has a longitudinal axis, and the longitudinal axis of the fluid conduit adjacent the inlet head is not parallel to the longitudinal axis of the inlet head.

12. The flow system of claim **9**, wherein each valve is a pair of valves, and a portion of the fluid conduit is positioned between at least one of the pair of valves and its corresponding tree.

13. The flow system of claim **12**, wherein the pair of valves are positioned in series in a common vertical plane.

14. The flow system of claim **9**, wherein each tree includes a master service valve, at least one wing valve, and a swab valve, and wherein the fluid conduit attaches to each tree adjacent the master service valve.

15. The flow system of claim **9**, wherein each tree includes a master service valve, at least one wing valve, and a swab valve, and wherein the fluid conduit attaches to each tree adjacent the swab valve.

16. A flow system for use at a hydraulic fracturing well site, comprising:

a tree attached to a wellhead;

an inlet head in fluid communication with at least one hydraulic fracturing pump at the well site;

fluid conduit providing fluid communication between the inlet head and the tree, at least a portion of the fluid conduit coupled to the tree and including one or more components to adjust an elevation of the fluid conduit;

a valve in the fluid conduit having an open position and a closed position, the valve permitting fluid flow through the fluid conduit when in the open position, and preventing fluid flow through the fluid conduit when in the closed position; and

a skid positioned to support the valve, the skid having one or more legs to adjust an elevation of a top portion of the skid relative to a ground plane.

17. The flow system of claim **16**, wherein the skid comprises an elevation adjustment device, the elevation adjustment device including a motor, a pin and aperture arrangement, or a combination thereof.

18. The flow system of claim **16**, wherein the valve comprises at least two valves, the at least two valves positioned in series in a common vertical plane.

19. The flow system of claim **16**, wherein an outlet of the valve is positioned at a lower elevation than an inlet to the tree and the portion of the fluid conduit extends between the outlet of the valve and the inlet to the tree.

20. The flow system of claim **16**, wherein the fluid conduit comprises couplings at end portions, the couplings being rotatable about a longitudinal axis of the fluid conduit to allow for adjustment of a position of the fluid conduit in at least two directions.

* * * * *