UNITED STATES DISTRICT COURT
NORTHERN DISTRICT OF ILLINOIS
EASTERN DIVISION

HENGST SE, Plaintiff, v. CHAMPION LABORATORIES, INC., Defendant.	Case No. 23-cv-00794 Judge Sara L. Ellis Magistrate Judge Heather K. McShain

DEFENDANT CHAMPION LABORATORIES'
OPENING CLAIM CONSTRUCTION BRIEF

TABLE OF CONTENTS

I. INTRODUCTION 1

II. LEGAL STANDARDS 1

III. THE ’203 PATENT 2

IV. DISPUTED PHRASE: “ROTATING THE RING FILTER INSERT RELATIVE TO THE FILTER HOUSING” 4

V. CONCLUSION 7

TABLE OF AUTHORITIES

Page

Cases

ABS Global, Inc. v. Cytonome/ST, LLC,
84 F.4th 1034 (Fed. Cir. 2023) 5, 6

Baldwin Graphic Sys., Inc. v. Siebert, Inc.,
512 F.3d 1338 (Fed. Cir. 2008) 4

Innova/Pure Water, Inc. v. Safari Water Filtration Systems, Inc.,
381 F.3d 1111 (Fed. Cir. 2004) 1

Kara Tech. Inc. v. Stamps.com Inc.,
582 F.3d 1341 (Fed. Cir. 2009) 2

Markman v. Westview Instruments, Inc.,
517 U.S. 370 (1996) 1, 2

Phillips v. AWH Corp.,
415 F.3d 1303 (Fed. Cir. 2005) (*en banc*) 1, 2

Prima Tek II, L.L.C. v. Polypap, S.A.R.L.,
318 F.3d 1143 (Fed. Cir. 2003) 7

Summit 6 LLC v. Samsung Electronics, Co., Ltd.,
802 F.3d 1283 (Fed. Cir. 2015) 4

Teva Pharm. USA, Inc. v. Sandoz, Inc.,
574 U.S. 318 (2015) 1, 2

Vitronics Corp. v. Conceptronic, Inc.,
90 F.3d 1576 (Fed. Cir. 1996) 2

I. INTRODUCTION

The parties have reduced their claim construction dispute to a single phrase of claim 15 of the asserted '203 Patent[1]: "rotating the ring filter insert relative to the filter housing." Defendant Champion Laboratories' ("Champion") proposed construction for this phrase captures the claims' express requirement that "***the***" ring filter insert—the entire ring filter insert—rotates.

Plaintiff Hengst SE's ("Hengst") construction, in contrast, ignores the words of the claim—rewriting and broadening them to cover rotating "at least a portion of" the ring filter insert, when the claim says rotating "the" ring filter insert. Plaintiff is simply writing in a broadening phrase with no support in the intrinsic evidence. In so doing, Hengst ignores the black-letter requirement that the use of indefinite articles in claims such as the word "the" refers back to previous claim elements. Hengst's failure to do so is of no surprise, as its construction is results-oriented and attempts to distort the language of the claims in an attempt to ensnare the accused filter insert. The Court should reject Hengst's improper attempts to redraft the claims and adopt Champion's proposed construction.

II. LEGAL STANDARDS

A patent generally includes two portions—the claims and the specification. The claims define the invention: "[A] patent claim is that 'portion of the patent document that defines the scope of the patentee's rights.'" *Teva Pharm. USA, Inc. v. Sandoz, Inc.*, 574 U.S. 318, 321 (2015) (quoting *Markman v. Westview Instruments, Inc.*, 517 U.S. 370, 372 (1996)); *Phillips v. AWH Corp.*, 415 F.3d 1303, 1312 (Fed. Cir. 2005) (*en banc*) (quoting *Innova/Pure Water, Inc. v. Safari Water Filtration Systems, Inc.*, 381 F.3d 1111, 1115 (Fed. Cir. 2004)).

[1] U.S. Patent No. 9,023,203 (the "'203 Patent"), which is directed to a liquid (*i.e.*, motor oil) filter insert. *See* Ex. A ('203 Patent). Hengst asserts the following claims: 15-17, 19, 23-25, 28, and 30.

Claim construction is the process by which the meaning and scope of asserted claims is determined and that task "falls 'exclusively within the province of the court,' not that of the jury." *Id*. at 325 (quoting *Markman*, 517 U.S. at 372). Courts, therefore, first "look to the words of the claims themselves, both asserted and nonasserted, to define the scope of the patented invention." *Vitronics Corp. v. Conceptronic, Inc.*, 90 F.3d 1576, 1582 (Fed. Cir. 1996).

Claim construction begins with the ordinary meaning of the terms. *Phillips*, 415 F.3d at 1312 (quoting *id*.) ("[T]he words of a claim 'are generally given their ordinary and customary meaning.'"). Ordinary and customary meaning is "the meaning that the term would have to a person of ordinary skill in the art in question at the time of the invention, *i.e.*, as of the effective filing date of the patent application." *Phillips*, 415 F.3d at 1313.[2]

The specification is a written description of the invention that precedes the claims. Although "the claims themselves provide substantial guidance as to the meaning of particular claim terms," the specification provides the context for those claims. *Phillips*, 415 F.3d at 1314. However, claim terms should not be limited to disclosed embodiments in the specification. *Kara Tech. Inc. v. Stamps.com Inc.*, 582 F.3d 1341, 1348 (Fed. Cir. 2009) ("The claims, not specification embodiments, define the scope of patent protection.").

III. THE '203 PATENT

The '203 Patent is directed to "a liquid filter including a filter housing, a ring filter insert and a cover," wherein "the ring filter insert is rotated relative to the filter housing …" Ex. A ('203 Patent) at Abstract. According to the '203 Patent, prior art filters with ring filter inserts purportedly

[2] Champion proposes that a Person of Ordinary Skill in the Art would have at least a master's degree in chemical, electrical, mechanical, or automotive engineering, and at least two or more years of experience in the automotive industry designing, developing, testing, and engineering automotive components or practical experience servicing, assembling, repairing, and/or developing internal combustion engines and/or engine oil filters (or equivalent experience)."

required that "in response to the installation of the ring filter insert into the filter housing, an operator must actively establish the correct rotational position between these two parts, wherein experience shows that errors can be made easily." *Id.* at 1:44-47. Thus, the '203 Patent's purported solution is an arrangement of ramps and protrusions such that "[t]he ring filter insert can be inserted into the filter housing in any rotational position relative thereto" because "[b]y rotating the ring filter insert about itself, … the [ramps and protrusions] guide the blocking element [of the ring filter insert] to the outlet [of the filter housing]." *Id.* at 3:4-10.

Figures 13 and 14 of the '203 Patent depict the ring filter insert, including inclined planes on the outer circumference of the insert that cause the entire ring filter insert to be rotated when inserted into a housing. *Id.* At 9:28-40.

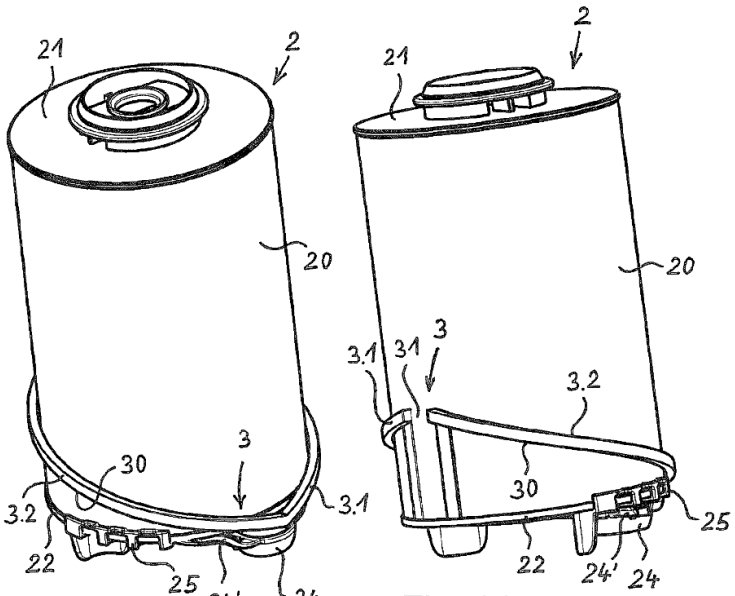

Fig. 13 Fig. 14

IV. DISPUTED PHRASE[3]: "ROTATING THE RING FILTER INSERT RELATIVE TO THE FILTER HOUSING"

Term/Phrase	Hengst's Construction	Champion's Construction
"rotating the ring filter insert relative to the filter housing" (asserted claim 15)	Twisting or spinning at least a portion of the ring filter insert relative to the filter housing	Rotating the ring filter insert, which comprises the hollow-cylindrical filter material body surrounded on front sides by top and bottom front panels, relative to the filter housing

The phrase "rotating the ring filter insert relative to the filter housing" appears in independent claim 15 of the '203 Patent. Every other asserted claim depends from claim 15.

The parties' dispute focuses on a discrete issue: whether the "rotating" phrase requires "***the***" ring filter insert to rotate (Champion's proposed construction) or allows rotating only a "***portion***" of the ring filter insert (Hengst's construction). At the outset, Champion's proposed construction is the only one that is consistent with the language of the claims. The disputed phrase requires "***the***" ring filter to rotate. The word "the" (like the word "said") is a term of art that refers back to a previously recited claim term. *Summit 6 LLC v. Samsung Electronics, Co., Ltd.*, 802 F.3d 1283, 1291 (Fed. Cir. 2015) ("[t]he use of the term 'said' [or 'the'] indicates that this portion of the claim limitation is a reference back to the previously claimed [term]"); *Baldwin Graphic Sys., Inc. v. Siebert, Inc.*, 512 F.3d 1338, 1342-43 (Fed. Cir. 2008) (the claim term "said" or "the" is an "anaphoric phrase[], referring to the initial antecedent phrase").[4] Claim 15 is reproduced below for reference, with relevant terms highlighted:

[3] The parties also disputed the meaning of the claim term "panel." While Champion maintains that its proposed construction is correct, as a compromise and in an effort to narrow the issues to be decided by the Court, it accepts for purposes of this case Plaintiff's proposed construction for panel: "covering structure formed from one or more elements."

[4] When used in a patent claim, the words "the" and "said" are synonymous and have the same antecedent impact. *Id.* at 1343 (noting that "said" and "the" are both definite articles and treating

> **15**. A ring filter insert for a liquid filter, comprising
> a hollow-cylindrical filter material body surrounded on front sides by top and bottom front panels and which can be replaceably arranged in a filter housing,
> an eccentric blocking element arranged on the bottom front panel for engaging an eccentric opening in the filter housing,
> first positioning means on the ring filter insert, which interact with second positioning means on the filter housing when the ring filter insert is inserted into the filter housing and which are arranged to bring the blocking element into engagement with the eccentric opening,
> the first positioning means being one of an inclined plane and a protruding nose, with the second positioning means being the other of the inclined plane and the protruding nose,
> the inclined plane and the nose arranged to be moved in relation to each other in such a way that they slide along each other and bring the blocking element into engagement with the eccentric opening, by rotating the ring filter insert relative to the filter housing,
> the first positioning means being one of embodied and arranged on an inner circumference of the ring filter insert.

Ex. A ('203 Patent) at 17:36-40. As is plain from the express claim language, the "ring filter insert" comprises a "hollow-cylindrical filter material body," an "eccentric blocking element," and "a first positioning means." The latter part of the claim recites rotating ***the*** ring filter insert, which refers back to the ring filter insert recited in the preamble. The claim does not recite rotating "at least a portion" of the ring filter. Thus, Hengst's proposed construction, which requires only a portion of the ring filter insert to rotate, would ignore that the claim requires ***the*** ring filter insert to rotate—not just any portion of the ring insert while the rest remains stationary.

The Federal Circuit's decision in *ABS Global* is instructive. In that case, the claim term at issue was "the sample stream." *ABS Global, Inc. v. Cytonome/ST, LLC*, 84 F.4th 1034, 1040 (Fed.

---

them synonymously, "[t]he subsequent use of definite articles 'the' or 'said' in a claim . . . refer back to the same claim term").

Cir. 2023). The parties' dispute revolved around whether that phrase was limited to a singular sample stream or multiple streams. *Id*. The Federal Circuit found that the use of the indefinite article "the" in the claims referred back to the original use of the term "sample" stream, and since that original phrase included multiple streams, the latter use likewise encompassed multiple streams—importantly, the Federal Circuit expressly found that latter use of the word "***takes its meaning*** from" the previous, antecedent use:

> The specific claim language at issue is "a fluid focusing region configured to focus the sample stream." ***The use of the definite article, "the," means that the phrase "the sample stream" refers back to earlier language as an antecedent.*** The antecedent language is "a sample stream" in the preceding limitation, and it is the singular-only or plural-allowing meaning of that limitation which is determinative. ***The reference-back "the" language takes its meaning from the meaning of the antecedent, so if "a sample stream" has a plural-allowing meaning, so does the reference-back "the sample stream" phrase.***

Id.

ABS compels the same result here—the disputed "rotating" phrase expressly recites "the" ring filter insert, which expressly comprises the hollow-cylindrical filter material body, eccentric blocking element, and the first positioning means. As in *ABS*, "the ring filter insert" ***takes its meaning*** from the antecedent use on the claim. Champion's proposed construction clarifies this basic tenant of claim construction concept: it adds a definition of the phrase "ring filter insert," clarifying that "***the***" filter is rotating, including the recited elements in the claim.[5] The definition of "ring filter insert," in turn, is specifically recited in the claim itself, as "a hollow-cylindrical filter material body surrounded on front sides by top and bottom front panels[.]" Ex. A ('203 Patent) at 17:37-39.[6] Placing this word-for-word definition of "ring filter insert" into the disputed

[5] Indeed, should the Court agree that "***the***" ring filter insert refers back to the ring filter insert in the preamble, no construction here is necessary as the claim requires the entire ring filter assembly to rotate, not just ***any*** "portion."

[6] The remaining elements of the ring filter assembly—the eccentric blocking element and the first positioning means—are required by the claim to be "on" the ring filter assembly.

phrase "rotating the ring filter insert relative to the filter housing" yields Champion's proposed construction.

Champion's proposed construction is also appropriate because it draws from the claim itself, which ***expressly*** defines the "ring filter insert." The express language of the asserted claim contains a definition of "ring filter insert," which provides the best evidence of how this term should be understood. *Prima Tek II, L.L.C. v. Polypap, S.A.R.L.*, 318 F.3d 1143, 1148 (Fed. Cir. 2003) ("Claim construction begins with the words of the claim."). The definition of "ring filter insert" appears not just in claim 15, but also in independent claim 1 and in the specification of the patent. Ex. A ('203 Patent) at 1:16-17 and 15:59-61.

Hengst, in contrast, makes no attempt to follow the Federal Circuit's guidance and express use of the indefinite article "the." Instead, Hengst improperly adds words to the claim that appear nowhere in the '203 Patent or the claims to manufacture a viable infringement theory. Claim 15 discloses "rotating the ring filter insert relative to the filter housing," while Hengst's proposed construction would broaden this claim to "rotating ***at least a portion of*** the ring filter insert relative to the filter housing." This strained construction is an attempt to advance an infringement theory that it at odds with the intrinsic evidence.

Because Champion's proposed construction is consistent with both the intrinsic evidence and the plain and ordinary meaning, it should be adopted.

V. CONCLUSION

For the reasons set forth above, the Court should adopt Champion's proposed constructions for the disputed claim terms.

Date: May 7, 2024

Respectfully submitted,

By: */s/ Dave A. Nelson*

Dave A. Nelson
Athena Dalton
Quinn Emanuel Urquhart & Sullivan, LLP
191 N. Wacker Drive, Suite 2700
Chicago, Illinois 60606
Tel: (312) 705-7400

James Glass (admitted *pro hac vice*)
Matthew D. Robson (admitted *pro hac vice*)
Quinn Emanuel Urquhart & Sullivan, LLP
51 Madison Avenue, 22nd Floor
New York, New York 10010
Tel.: (212) 849-7000

Counsel for Defendant
Champion Laboratories, Inc.

CERTIFICATE OF SERVICE

I hereby certify that on the 7th day of May, 2023, I electronically served the foregoing document on all counsel of record via CM/ECF.

By: */s/ Athena Dalton*
Athena Dalton