Exhibit 2021

US 20040144734A1

(19) United States

(12) Patent Application Publication

(10) Pub. No.: US 2004/0144734 A1

(43) Pub. Date: Jul. 29, 2004

Suzumori et al.

(54) **FLUID FILTER, DRAIN MECHANISM THEREOF, DRAINING JIG USED IN FLUID FILTER AND DRAINING METHOD OF FLUID FILTER**

(75) Inventors: **Kiichiro Suzumori**, Kariya-shi (JP); **Toshihiro Takahara**, Kariya-shi (JP); **Sadahito Fukumori**, Kariya-shi (JP); **Ryuichiro Kamioka**, Toyota-shi (JP); **Jin Hashioka**, Toyota-shi (JP); **Kenzo Kado**, Toyota-shi (JP)

Correspondence Address:
OBLON, SPIVAK, MCCLELLAND, MAIER & NEUSTADT, P.C.
1940 DUKE STREET
ALEXANDRIA, VA 22314 (US)

(73) Assignees: **TOYODA BOSHOKU CORPORATION**, Kariya-shi (JP); **TOYOTA JIDOSHA KABUSHIKI KAISHA**, Toyota-shi (JP); **DENSO CORPORATION**, Kariya-shi (JP)

(21) Appl. No.: **10/704,545**

(22) Filed: **Nov. 12, 2003**

(30) **Foreign Application Priority Data**

Nov. 12, 2002 (JP) 2002-328803

Publication Classification

(51) **Int. Cl.**[7] **B01D 35/16**

(52) **U.S. Cl.** **210/767**; 210/248

(57) **ABSTRACT**

The invention provides a drain mechanism of a fluid filter in which a heated fluid is not splashed on a worker at a time of discharging the fluid such as a time of exchanging an element, and can inhibit dusts or the like from being mixed from an external portion at a time of normal use. A drain mechanism **7** of the present invention is provided with a cap **3** engaged with a case **2** and having a drain hole **15**, a drain member (a drain plug **20**) detachably mounted to the cap from an outer side thereof and closing the drain hole, a valve member **25** provided in an inner side of the cap and closing the drain hole, and an elastic means (a spring **11**) for energizing the valve member in a direction of closing the drain hole. In a state in which the drain member is detached from the cap, a residual fluid within a housing is discharged by a tubular draining jig **30** inserted to the drain hole.

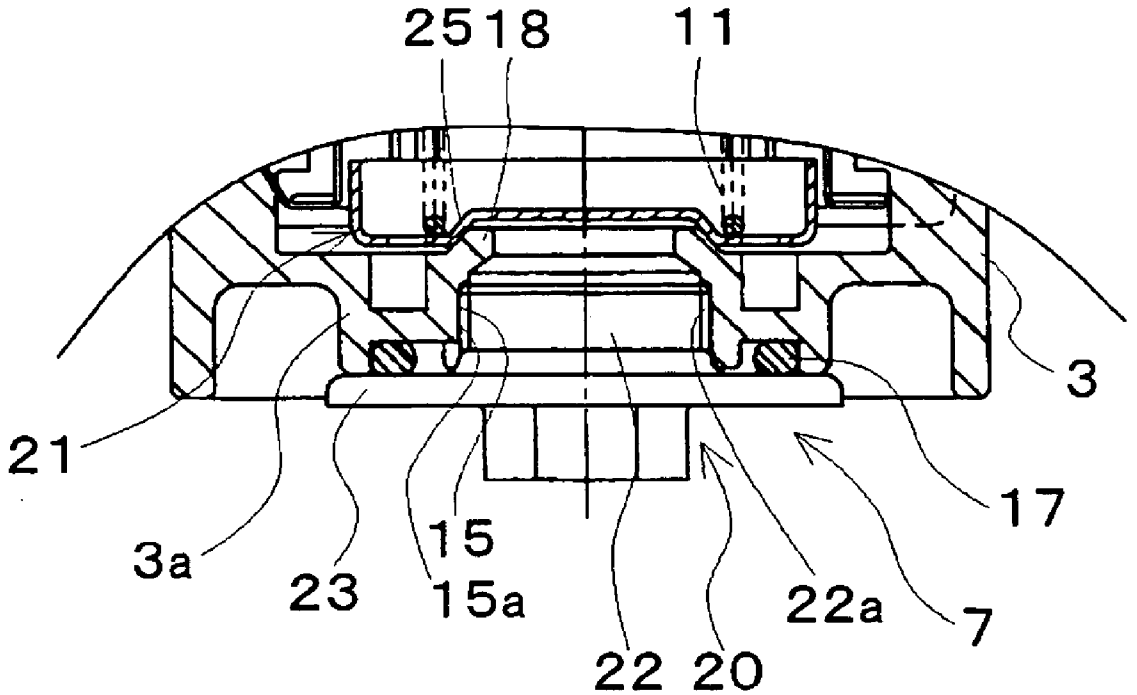

FIG.1

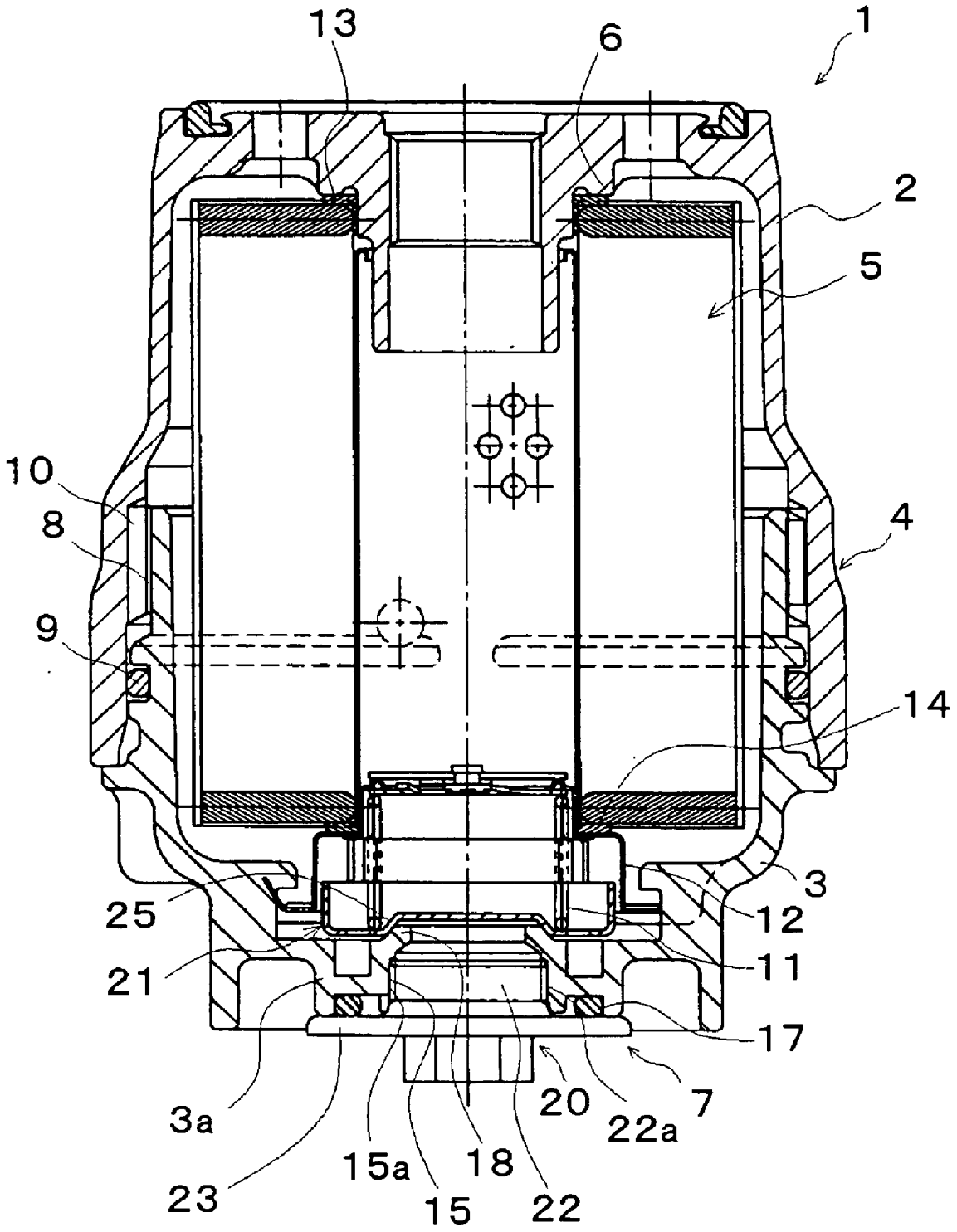

FIG.2

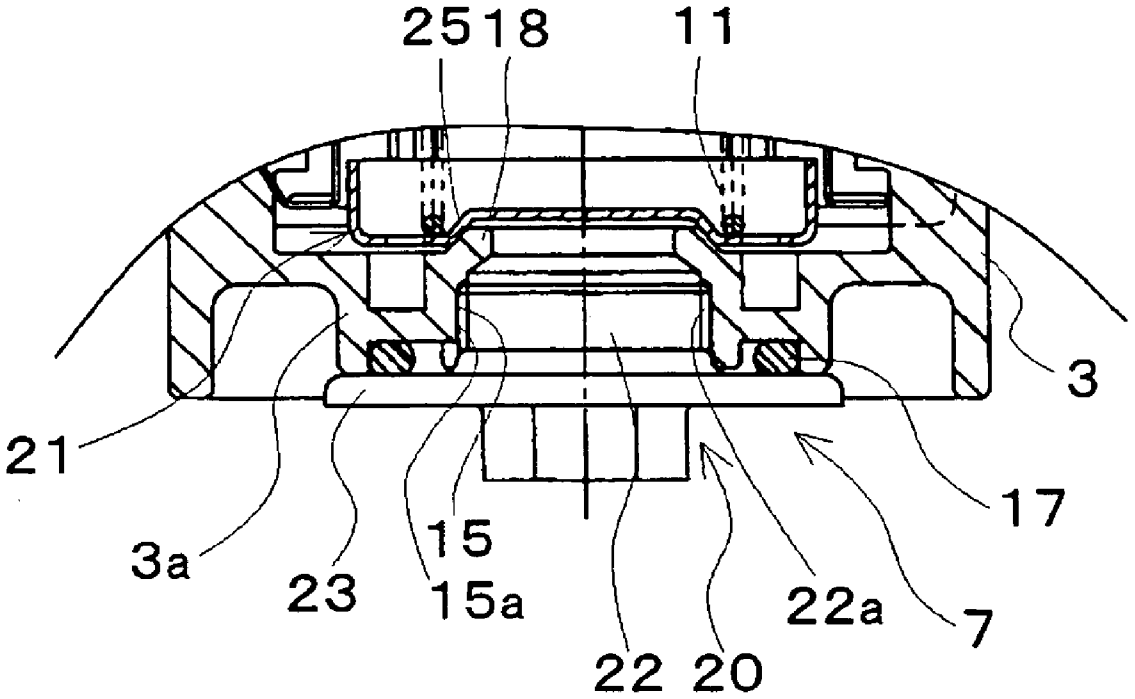

FIG.3

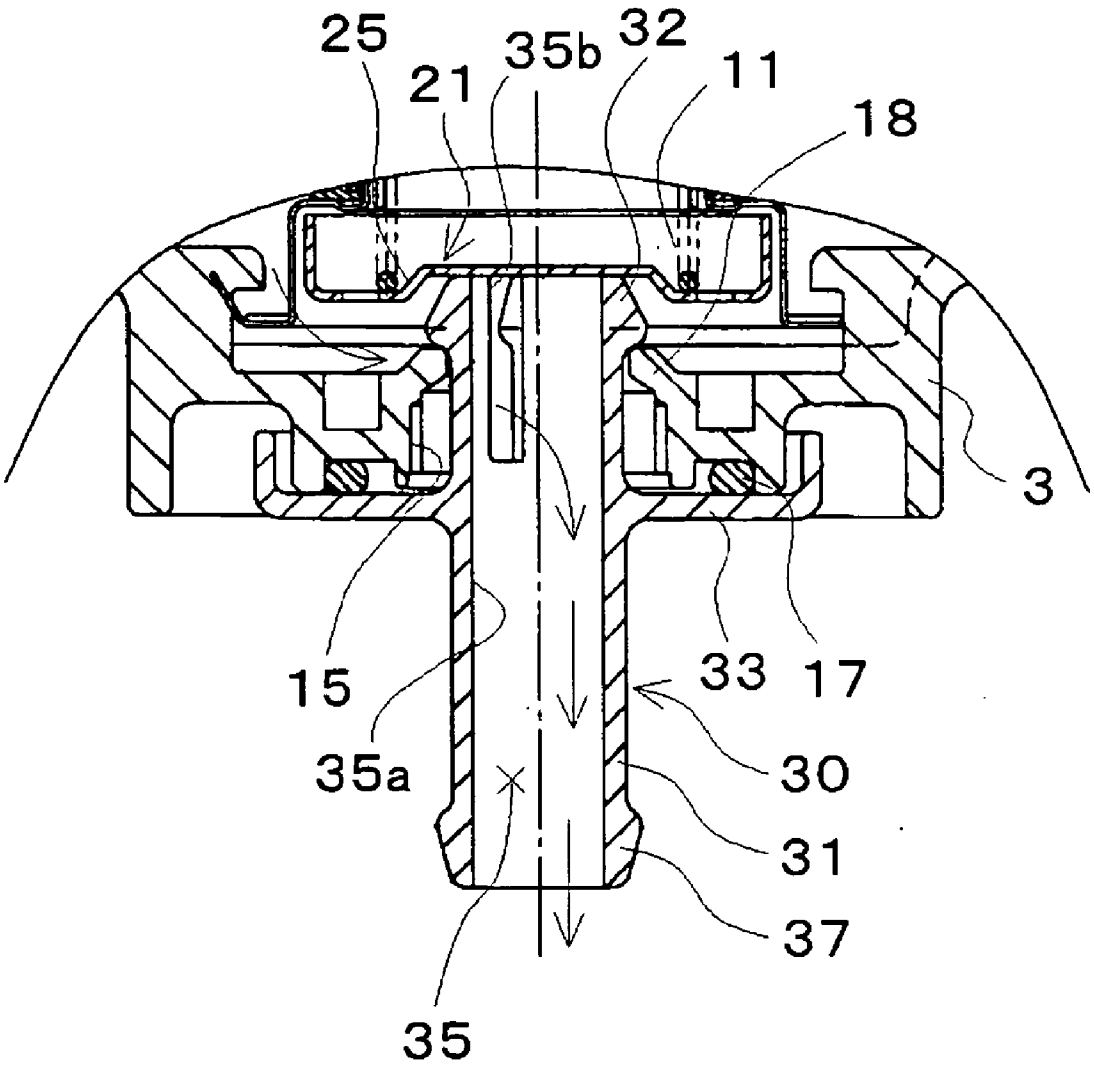

FIG.4

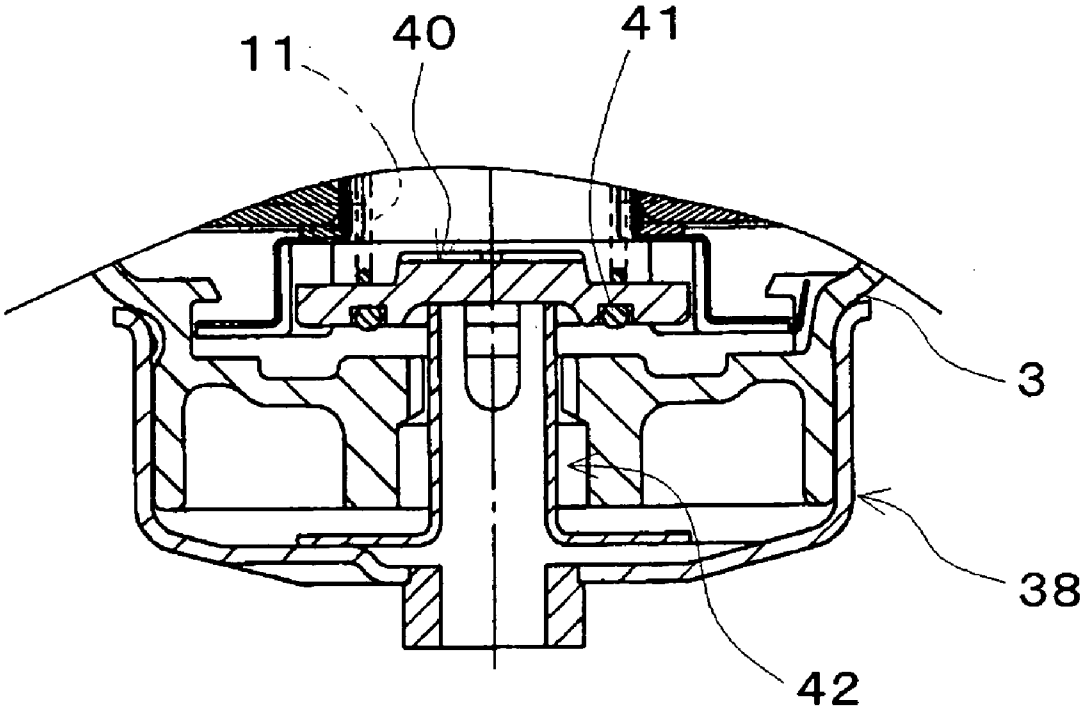

FLUID FILTER, DRAIN MECHANISM THEREOF, DRAINING JIG USED IN FLUID FILTER AND DRAINING METHOD OF FLUID FILTER

BACKGROUND OF THE INVENTION

[0001] 1. Field of the Invention

[0002] The present invention relates to a fluid filter, a drain mechanism thereof, a draining jig used in the fluid filter and a draining method of the fluid filter. The present invention more particularly relates to a fluid filter, a drain mechanism thereof, a draining jig used in the fluid filter and a draining method of the fluid filter, in which a heated fluid is not splashed on a worker at a time of discharging the fluid such as a time of exchanging an element, and can maintain a high reliability in sealing a drain hole for a long time period while inhibiting dusts or the like from being mixed from an external portion at a time of normal use.

[0003] The present invention can be widely used, for example, in an oil filter for filtering foreign materials, abraded powders, carbon and the like mixed in an oil lubricating an internal combustion engine, a fuel filter and a field relevant thereto.

[0004] 2. Description of Prior Art

[0005] Conventionally, as a fluid filter, there has been generally known, for example, an element replacement type fluid filter in which a filter element is replaced at a time when a filter media is clogged after a predetermined time has passed and reaches a service life.

[0006] As a drain mechanism of the element replacement type fluid filter, there has been known, for example, a structure in which a drain member (a drain plug **15**) is screwed with a drain hole formed in a cap (a lower case **12**) (refer to a patent document 1). Accordingly, it is possible to detach the drain member from the drain hole by loosening the drain member so as to leave open the drain hole prior to separating the case and the cap by canceling the engagement between both the elements, thereby discharging a residual oil in an inner portion of the housing from the drain hole.

[0007] In this case, in the fluid filter for filtering an engine oil for a vehicle, an engine is frequently warmed up at a time of replacing the filter element, and the oil is in a heated state.

[0008] However, in the conventional drain mechanism, discharging the residual oil at a time of replacing the filter element is performed by detaching the drain member from the cap. In other words, at the same time when the drain member is loosened, and a sealing of a seal member (a packing **15***a*) for the drain member is cancelled, discharging the residual oil is started. As a result, there is generated a disadvantage that the heated residual oil overflows during a detaching operation of the drain member, and is splashed on hands of the worker.

[0009] Consequently, as the conventional drain mechanism of the fluid filter for solving the problem mentioned above, there has been known, for example, a structure in which a tubular drain pipe member (a drain plug **15**) having a drain passage (a center hole **15***g* and a window hole **15***f*) is screwed with a drain hole formed in a cap (a lower case **12**) (refer to a patent document 2).

[0010] The drain passage of the drain pipe member and the inner portion of the housing are sealed by a pair of seal members (the packing **15***g*) attached to an outer periphery of the drain pipe member, at a time of normally using the fluid filter. Further, when replacing the filter element, the sealing of the upper seal member is cancelled by loosening the drain pipe member, the drain passage of the drain pipe member and the inner portion of the housing are communicated with each other, and the residual oil within the housing is discharged via the drain passage.

[0011] Since the residual oil is discharged via the drain passage of the drain pipe member in the manner mentioned above, it is possible to prevent the oil in the middle of the discharging from being splashed on the hands of the worker.

[0012] In this case, when the seal of the upper seal member is cancelled by loosening the drain pipe member, the seal of the lower seal member is maintained, so that the residual oil does not leak out from the other portions than the drain passage of the drain pipe member at a time of discharging the residual oil.

[0013] Patent Document 1

[0014] Japanese Unexamined Patent Publication No. 2000-42309

[0015] Patent Document 2

[0016] Japanese Unexamined Patent Publication No. 11-104408

[0017] However, in the drain mechanism of the conventional fluid filter, since the drain pipe member is formed in the hollow shape and is structured such as to have the drain passage, dusts or the like such as sediments or mud or the like is mixed into the inner portion of the cap through the drain passage of the drain pipe member from the external portion, during a normal use of the fluid filter, so that it is hard to secure a reliability of seal in the drain hole achieved by the seal member.

SUMMARY OF THE INVENTION

[0018] As mentioned above, the present invention is made by taking the actual condition mentioned above into consideration, and an object of the present invention is to provide a drain mechanism of a fluid filter in which a heated fluid is not splashed on a worker at a time of discharging the fluid such as a time of exchanging an element, and can maintain a high reliability in sealing a drain hole for a long time period while inhibiting dusts or the like from being mixed from an external portion at a time of normal use.

[0019] Further, another object of the present invention is to provide a fluid filter having the drain mechanism mentioned above, a draining jig preferably used in the fluid filter and a preferable draining method of the fluid filter.

[0020] The invention will now be described following

[0021] [1] A drain mechanism of a fluid filter comprising

[0022] a cap engaged with a case and having a drain hole;

[0023] a drain member detachably mounted to said cap from an outer side thereof and closing said drain hole;

[0024] a valve member provided in an inner side of said cap and closing said drain hole; and

[0025] an elastic means for energizing said valve member in a direction of closing said drain hole.

[0026] [2] A drain mechanism of a fluid filter as mentioned in above [1], wherein a seal member is interposed between said cap and said drain member attached to said drain hole.

[0027] [3] A drain mechanism of a fluid filter as mentioned in above [1], wherein a closure of said drain hole achieved by said valve member is cancelled by displacing said valve member against the energizing force of said elastic means by means of a tubular draining jig inserted to said drain hole, in a state in which said drain member is detached from said cap.

[0028] [4] A drain mechanism of a fluid filter as mentioned in above [3], wherein a seal structure is interposed between said cap and said draining jig inserted to said drain hole.

[0029] [5] A drain mechanism of a fluid filter as mentioned in above [3], wherein said cap is provided with an engaged portion which an engaging portion provided in said draining jig is allowed to be engaged with and disengaged from.

[0030] [6] A fluid filter comprising:

[0031] a drain mechanism comprising a cap engaged with a case and having a drain hole, a drain member detachably mounted to said cap from an outer side thereof and closing said drain hole, a valve member provided in an inner side of said cap and closing said drain hole, and an elastic means for energizing said valve member in a direction of closing said drain hole; and

[0032] a housing having said drain mechanism and constituted by said case and said cap.

[0033] [7] A fluid filter as mentioned in above [6], wherein a seal member is interposed between said cap and said drain member attached to said drain hole.

[0034] [8] A fluid filter as mentioned in above [6], wherein a closure of said drain hole achieved by said valve member is cancelled by displacing said valve member against the energizing force of said elastic means by means of a tubular draining jig inserted to said drain hole, in a state in which said drain member is detached from said cap.

[0035] [9] A fluid filter as mentioned in above [8], wherein a seal structure is interposed between said cap and said draining jig inserted to said drain hole.

[0036] [10] A fluid filter as mentioned in above [8], wherein said cap is provided with an engaged portion which an engaging portion provided in said draining jig is allowed to be engaged with and disengaged from.

[0037] [11] A draining jig used in a fluid filter comprising:

[0038] a drain mechanism comprising a cap engaged with a case and having a drain hole, a drain member detachably mounted to said cap from an outer side thereof and closing said drain hole, a valve member provided in an inner side of said cap and closing said drain hole, and an elastic means for energizing said valve member in a direction of closing said drain hole; and

[0039] a housing having said drain mechanism and constituted by said case and said cap,

[0040] wherein a drain passage of said draining jig is constituted by a center passage extending toward an axial direction of said draining jig, and a communication passage connected to said center passage and open to an outer periphery of said draining jig.

[0041] [12] A draining jig used in a fluid filter as mentioned in above [11], wherein said draining jig has a flange portion which is in contact with a seal member provided in a bottom portion of said cap.

[0042] [13] A draining jig used in a fluid filter as mentioned in above [11], wherein said draining jig has a connection portion capable of connecting to a fluid discharging hose.

[0043] [14] A draining jig used in a fluid filter as mentioned in above [11], wherein said draining jig is integrally provided with an attaching and detaching jig used for attaching and detaching said cap to and from said case.

[0044] [15] A draining method of a fluid filter comprising:

[0045] a drain mechanism comprising a cap engaged with a case and having a drain hole, a drain member detachably mounted to said cap from an outer side thereof and closing said drain hole, a valve member provided in an inner side of said cap and closing said drain hole, and an elastic means for energizing said valve member in a direction of closing said drain hole; and

[0046] a housing having said drain mechanism and constituted by said case and said cap,

[0047] wherein, said drain member is detached from said cap, and a closure of said drain hole by said drain member is cancelled, thereafter, a tubular draining jig is inserted to said drain hole, and said valve member is displaced against an energizing of said elastic means by said draining jig, thereby canceling a closure of said drain hole by said valve member, and discharging a fluid within a housing to an external portion via a drain passage provided in said draining jig.

[0048] [16] A draining method of a fluid filter as mentioned in above [15], wherein a seal member is interposed between said cap and said drain member attached to said drain hole.

[0049] [17] A draining method of a fluid filter as mentioned in above [15], wherein a seal structure is interposed between said cap and said draining jig inserted to said drain hole.

[0050] [18] A draining method of a fluid filter as mentioned in above [15], wherein said cap is provided with an engaged portion which an engaging portion provided in said draining jig is allowed to be engaged with and disengaged from.

[0051] In accordance with the drain mechanism of the fluid filter on the basis of the present invention, at a time of normally using the fluid filter, the drain hole is closed by the drain member. Further, the drain member is detached from the cap at a time of replacing the element or the like. At this

time, the closure of the drain hole achieved by the drain member is cancelled, however, the drain hole is closed by the valve member energized by the elastic member. The closure of the drain hole achieved by the valve member is cancelled by inserting the drain jig to the drain hole from this state, and displacing the valve member against the energizing force of the elastic member by means of the draining jig, and the fluid within the housing is discharged to the external portion via the drain passage provided in the draining jig.

[0052] As mentioned above, at a time of replacing the element or the like, it is possible to discharge the fluid by using the tubular draining jig, and it is possible to inhibit the heated fluid from being splashed on the worker at this fluid discharging time. Further, since the drain hole is closed by the drain member at a time of normal use, it is possible to prevent the dusts or the like from making an intrusion into the inner portion of the cap, and it is possible to maintain a high sealing reliability of the drain hole for a long time period.

[0053] Further, in the case that the seal member is interposed between the cap and the drain member attached to the drain hole, it is possible to improve a reliability in sealing the drain hole achieved by the drain member.

[0054] Further, in the case that the closure of the drain hole achieved by the valve member is cancelled by displacing the valve member against the energizing force of the elastic means by means of the tubular draining jig inserted to the drain hole, in a state in which the drain member is detached from the cap, it is possible to discharge the fluid within the housing to the external portion via the drain passage provided in the draining jig.

[0055] Further, in the case that the seal structure is interposed between the cap and the draining jig inserted to the drain hole, it is possible to more securely prevent the fluid from flowing out to the external portion from the other portions than the drain passage at a time of discharging the fluid.

[0056] Further, in the case that the cap is provided with the engaged portion which the engaging portion provided in the draining jig can be engaged with and disengaged from, it is possible to fix and detach the draining jig to and from the cap, and it is possible to improve a workability at a time of discharging the fluid.

[0057] In accordance with the fluid filter on the basis of the present invention, at a time of replacing the element or the like, it is possible to discharge the fluid by employing the tubular draining jig, and it is possible to inhibit the heated fluid from being splashed on the worker at a time of discharging the fluid. Further, since the drain hole is closed by the drain member at a time of normal use, it is possible to prevent the dusts or the like from making an intrusion into the inner portion of the cap, and it is possible to maintain a high reliability of seal in the drain hole for a long time period.

[0058] In accordance with the draining jig used in the fluid filter on the basis of the present invention, it is possible to provide the draining jig preferably used in the fluid filter having the drain mechanism mentioned above. In other words, it is possible to smoothly discharge the fluid within the housing to the external portion via the center passage and the communication passage structuring the drain passage of the draining jig, at a time of discharging the fluid.

[0059] Further, in the case that the draining jig has the flange portion which is in contact with the seal member provided in the bottom portion of the cap, it is possible to more securely prevent the fluid from flowing out to the external portion from the other portions than the drain passage of the draining jig, at a time of discharging the fluid.

[0060] Further, in the case that the draining jig has the connection portion capable of connecting to the fluid discharging hose, it is possible to inhibit the workability from being deteriorated due to the scattering of the fluid at a time of discharging the fluid.

[0061] Further, in the case that the draining jig is integrally provided with the attaching and detaching jig used for attaching and detaching the cap to and from the case, it is possible to perform the fluid discharging work by means of the attaching and detaching jig, and it is possible to perform the attaching and detaching work between the case and the cap following the fluid discharging work.

[0062] In accordance with the draining method of the fluid filter on the basis of the present invention, it is possible to provide a preferable draining method of the fluid filter mentioned above. In other words, first, the drain member is detached from the cap, and the closure of the drain hole achieved by the drain member is cancelled. Thereafter, the tubular draining jig is inserted to the drain hole, and the valve member is displaced against the energizing of the elastic means by the draining jig, whereby it is possible to cancel the closure of the drain hole by the valve member, and it is possible to smoothly discharge the fluid within the housing to the external portion via the drain passage provided in the draining jig.

MODE FOR CARRYING OUT THE INVENTION

[0063] <Fluid Filter>

[0064] The "fluid filter" in accordance with the present mode is provided with a drain mechanism and a housing mentioned below. The fluid filter can be provided, for example, with a filter element received in the housing.

[0065] The "housing" mentioned above is not particularly limited in a structure, a shape, a material and the like thereof as far as it is constituted by a cap and a case which can be engaged and disengaged with each other. As an engaging and disengaging mechanism between the cap and the case, for example, there can be listed up (1) a screwing mechanism constituted by male and female screw portions which can be screwed with each other, (2) a bayonet mechanism constituted by a groove portion and a convex portion which can be engaged and disengaged with each other, and the like. Further, an inflow port for taking in a liquid from an external portion and an outflow port for delivering the liquid to the external portion are normally formed in the case.

[0066] <Drain Mechanism>

[0067] The "drain mechanism" in accordance with the present mode is provided with a cap, a drain member, a valve member and an elastic means mentioned below.

[0068] The "cap" mentioned above is not particularly limited in a structure, a shape, a material and the like thereof

as far as it is engaged with the case mentioned above and has a drain hole. The cap can be provided, for example, with an engaged portion which an engaging portion of a draining jig mentioned below can be engaged to and disengaged from.

[0069] The "engaged portion" mentioned above is not particularly limited in a structure, a shape, a material and the like thereof as far as the engaging portion of the draining jig mentioned below can be engaged and disengaged. The engaged portion can be, for example, arranged in an inner side of the cap or arranged in an outer side of the cap. Further, the engaged portion can be, for example, integrally formed with the cap or formed by an independent member from the cap. Further, the engaged portion can be, for example, constituted by an elastically deformable structure.

[0070] The "drain member" mentioned above is not particularly limited in a structure, a shape, a material and the like thereof as far as it is detachably mounted to the cap mentioned above from an outer side thereof and can close the drain hole mentioned above. The drain member can, for example, have a plug portion in which a male screw capable of engaging with a female screw formed on an inner peripheral surface of the drain hole mentioned above is formed.

[0071] Further, in general, a seal member (for example, an O-ring or the like) can be provided between the drain member and the cap.

[0072] As an installing aspect of the "seal member" mentioned above, there can be listed up, for example, any one of or a combination of two or more of (1) an aspect that the seal member is interposed between the bottom portion of the cap mentioned above and the flange portion provided in the drain member, (2) an aspect that the seal member is interposed between the inner peripheral surface of the drain hole mentioned above and the outer peripheral surface of the drain member mentioned above (for example, an outer peripheral surface of the plug portion mentioned above, and the like), and the like.

[0073] Further, in general, the seal structure can be provided between the draining jig mentioned below inserted to the drain hole mentioned above and the cap mentioned above.

[0074] As the "seal structure" mentioned above, there can be listed up, for example, any one of or a combination of two or more of (1) a structure in which the seal member (for example, an O-ring or the like) is interposed between the bottom portion of the cap mentioned above and the flange portion provided in the drain member mentioned above, (2) a structure in which an outer peripheral surface of the draining jig is brought into contact with an inner peripheral surface of the drain hole, and (3) a structure in which the seal member is interposed between the inner peripheral surface of the drain hole and the outer peripheral surface of the drain member and the like.

[0075] In this case, the seal member used in this seal structure can be used, for example, as the seal member provided between the drain member and the cap.

[0076] The 'valve member' mentioned above is not particularly limited in a structure, a shape, a material and the like thereof as far as it is provided in the inner side of the cap and can close the drain hole. The valve member can, for example, have a contact portion brought into contact with a valve seat portion (for example, a cap projection portion or the like) provided in the cap. Accordingly, the drain hole can be closed by bringing the contact portion of the valve member into contact with the valve seat portion of the cap. Further, the contact portion can seal the drain hole, for example, by being brought into direct contact with the valve seat portion of the cap and being brought indirect contact with the valve seat portion of the cap via the seal member.

[0077] The "elastic means" mentioned above is not particularly limited in a structure, a shape, a material and the like thereof as far as it can energize the valve member in a direction of closing the drain hole. As the elastic means, there can be listed up, for example, elastic members such as rubber and spring, buffer mechanism, and the like. As the spring, there can be listed up, for example, a coil spring, a conical spring, a leaf spring and the like. The elastic means can be, for example, arranged between an element support body (for example, a plate or the like) for supporting the filter element, and the valve member. Further, the elastic member can, for example, achieve a function of energizing the filter element and the element support body so as to support the filter element together with the element support body.

[0078] <Draining Jig>

[0079] The "draining jig" in accordance with the present embodiment is not particularly limited in a structure, a shape, a material and the like thereof as far as it is formed in a tubular shape and has the drain passage. The draining jig can, for example, have any one of or a combination of two or more of the engagement portion, the flange portion, the connection portion and the like mentioned below.

[0080] The "drain passage" mentioned above can be constituted, for example, by a center passage extending along an axial direction of the draining jig, and a communication passage connected to the center passage and open to an outer periphery of the draining jig. As the center passage, there can be listed up, for example, a center hole open to both end sides of the draining jig, a center hole open only to one end side of the draining jig, and the like. Further, as the communication passage mentioned above, there can be listed up, for example, a slit notched from an axial end side of the draining jig, a through hole formed on the outer periphery of the draining jig in a penetrating manner, and the like.

[0081] The "engaging portion" mentioned above is not particularly limited in a structure, a shape, a material and the like thereof as far as it can be engaged with and disengaged from the engaged portion of the cap mentioned above. The engaging portion is normally engaged with and disengaged from the engaged portion accompanying with the elastic deformation. Further, the engaging portion can be, for example, arranged in the axial end side of the draining jig or arranged at a predetermined position of the draining jig in an axial direction. Further, the engaging portion can be, for example, integrally formed with the draining jig, or formed by an independent member from the draining jig. Further, the engaging portion can be, for example, formed as an elastically deformable structure. In particular, it is preferable that the engaging portion is formed as a structure which can be elastically deformed by a communication passage (for example, a slit or the like) structuring the drain passage mentioned above.

[0082] The "flange portion" mentioned above is not particularly limited in a structure, a shape, a material and the like thereof as far as it can be brought into contact with the seal member provided in the bottom portion of the cap.

[0083] The "connection portion" mentioned above is not particularly limited in a structure, a shape, a material and the like thereof as far as it can be connected to the fluid discharging hose.

[0084] The draining jig mentioned above can be, for example, integrally provided with an attaching and detaching jig used for attaching and detaching the cap with respect to the case. The attaching and detaching jig can be, for example, formed as a tubular jig having an engagement portion which can be engaged with and disengaged from the engaged portion formed on the outer periphery of the cap. Further, the draining jig can be, for example, integrally formed with the attaching and detaching jig, or formed by an independent member from the attaching and detaching jig.

[0085] <Draining Method>

[0086] A draining method in accordance with the present mode first taking out the drain member from the cap and cancels the closure of the drain hole achieved by the drain member.

[0087] Thereafter, the draining jig is inserted to the drain hole, and the valve member is displaced against the energizing force of the elastic means by the draining jig. The closure of the drain hole achieved by the valve member is cancelled and the fluid within the housing is discharged to the external portion via the drain passage of the draining jig.

BRIEF DESCRIPTION OF THE DRAWINGS

[0088] **FIG. 1** is a cross sectional view showing an entire structure of an oil filter in accordance with the present embodiment in a used state;

[0089] **FIG. 2** is an enlarged view of a main portion in **FIG. 1**;

[0090] **FIG. 3** is an enlarged cross sectional view of a main portion of an oil filter in an oil discharging state; and

[0091] **FIG. 4** is an enlarged cross sectional view of a main portion for explaining the other aspect of a draining jig.

DESCRIPTION OF THE PREFERRED EMBODIMENT

[0092] A particular description will be given below of the present invention on the basis of an embodiment with reference to the accompanying drawings. In this case, in the present embodiment, an element replacement type filter is exemplified by an oil filter attached to a cylinder block (not shown) of an internal combustion engine.

[0093] (1) Structure of Oil Filter

[0094] An oil filter **1** in accordance with the present embodiment is basically provided, as shown in **FIG. 1**, with a housing **4** constituted by metal case **2** and cap **3** which can be engaged with and disengaged from each other, a filter element **5** received within the housing **4** and a drain mechanism **7**.

[0095] A male screw portion **8** is formed on an outer peripheral surface of the cap **3**, and an O-ring **9** is attached to the outer peripheral surface of the cap **3**. A female screw portion **10** is formed on an inner peripheral surface of the case **2**. When screwing the male screw portion **8** with the female screw portion **10** so as to engage the case **2** with the cap **3** via the O-ring **9**, an inner portion of the housing **4** is sealed (held in a liquid tight manner). Upper and lower end portions of the filter element **5** are sealed by the plate **12** and the case projection portion **6** provided in the case **2** via the respective seal members **13** and **14** due to the energizing force of the spring **11**, in the inner portion of the housing, and a filtration of the oil is carried out by the filter element **5**.

[0096] A drain hole **15** having a female screw **15***a* formed in an inner periphery thereof is provided in a center of the bottom portion **3***a* in the cap **3**. Further, an O-ring **17** (exemplified as a seal member) is attached to a lower end portion of the bottom portion **3***a* in the cap **3** so as to surround the drain hole **15**. Further, an annular cap projection portion **18** (exemplified as an engaged portion) is provided in an upper end portion of the bottom portion **3***a* in the cap **3**.

[0097] Next, a description will be given of the drain mechanism **7**. The drain mechanism **7** is basically provided, as shown in **FIGS. 1 and 2**, with a metal drain bolt **20** (exemplified as a drain member), a metal valve member **21** and a spring **11** (exemplified as an elastic means). The drain bolt **20** has a plug portion **22** having a male screw **22***a* formed therein, and a flange portion **23** connected to a lower portion of the plug portion **22**. Further, when engaging a male screw **22***a* of the drain bolt **20** with the female screw **15***a* of the drain hole **15** so as to screw the drain bolt **20** into the drain hole **15**, the flange portion **23** of the drain bolt **20** is pressure contacted against the O-ring **17** and the drain hole **15** is sealed.

[0098] The valve member **21** is formed in a socket shape as a whole, and has a contact portion **25** brought into contact with an outer peripheral surface of the cap projection portion **18**. The contact portion **25** of the valve member **21** is normally brought into contact with the cap projection portion **18** on the basis of the energizing force of the spring **11**, and the drain hole **15** is sealed by metal. Accordingly, even in a state in which the drain bolt **20** is detached from the drain hole **15**, only a small amount of residual oil within the housing **4** is flowed out to the outer portion from the drain hole **15**.

[0099] (2) Structure of Draining Jig

[0100] Next, a description will be given of the draining jig **30**. The draining jig **30** is made of a synthetic resin and is formed in a tubular shape as a whole, as shown in **FIG. 3**. The draining jig **30** has a pipe-shaped portion **31** having both ends opened, an engaging portion **32** provided in an upper end portion of the pipe-shaped portion **31** and having an outward bulged shape, and a socket-shaped flange portion **33** provided in an intermediate portion of the pipe-shaped portion **31**.

[0101] In the pipe-shaped portion **31**, there is formed a drain passage **35** constituted by a center hole **35***a* (exemplified as a center passage), and a plurality of slits **35***b* (exemplified as a communication passage) notched from an upper end of the center hole **35***a* toward a lower side. Further, the engaging portion **32** can be engaged with and

disengaged from the cap projection portion **18** accompanying with an elastic deformation generated by the slits **35***b*, and can fix the draining jig **30** to the cap **3** and cancel the fixing. Further, the flange portion **33** of the draining jig **30** is pressure contacted with the O-ring **17** of the cap **3** so as to be sealed, under a state in which the draining jig **30** is fixed to the cap **3** (refer to **FIG. 3**).

[**0102**] (3) Operation of Oil Filter

[**0103**] Next, a description will be given of an operation of the oil filter **1**. At a time when the oil filter **1** is normally used, the drain bolt **20** is mounted to the drain hole **15** of the cap **3** via the O-ring **17**, and the drain hole **15** is sealed.

[**0104**] Further, at a time of replacing the filter element **5**, the O-rings **9** and **17** and the like, the worker first loosens the drain bolt **20** and detaches the drain bolt **20** from the drain hole **15**. At this time, since the contact portion **25** of the valve member **21** is brought into contact with the cap projection portion **18** on the basis of the energizing force of the spring **11** so as to be sealed by metal seal, the residual oil within the housing **4** does not flow out to the outer portion from the drain hole **15**.

[**0105**] Thereafter, the worker inserts the draining jig **30** to the drain hole **15**, and pushes up the valve member **21** by the upper end surface of the engaging portion **32** against the energizing force of the spring **11**. Accordingly, the seal of the drain hole **15** achieved by the valve member **21** is cancelled, and the residual oil within the housing **4** is discharged to the outer portion via the slits **35***b* and the center hole **35***a* in the draining jig **30**. In this case, the engaging portion **32** of the draining jig **30** is engaged with the cap projection portion **18** by inserting the draining jig **30** to the drain hole **15** accompanying with the elastic deformation, and the draining jig **30** is fixed to the cap **3**. Further, in this fixed state, the flange portion **33** of the draining jig **30** is pressure contacted with the O-ring **17** provided in the bottom portion **3***a* of the cap **3** (refer to **FIG. 3**).

[**0106**] Thereafter, the worker pulls out the cap **3** from the draining jig **30** at a time when the residual oil within the housing **4** is discharged, and loosens the cap **3** by using an attaching and detaching jig (not shown) so as to separate the cap **3** from the case **2**, whereby a replacing work of the filter element **5**, the O-rings **9** and **17** and the like is performed.

[**0107**] (4) Effect of Embodiments

[**0108**] As mentioned above, in accordance with the present embodiments, since the drain bolt **20** is screwed with the drain hole **15** and the drain hole **15** is completely closed at a time when the oil filter **1** is normally used, the dusts such as the sediment, the mud and the like are not mixed into the inner portion of the housing **4** via the drain hole **15** from the external portion, and it is possible to maintain a high sealing reliability of the O-ring **17** for a long time period. Further, at a time of replacing the element, since the residual oil is discharged by using the draining jig **30** prior to the separating work between the case **2** and the cap **3**, it is possible to prevent the heated oil from being splashed on the worker at a time of discharging the oil.

[**0109**] Further, in accordance with the present embodiment, since the draining jig **30** can be fixed to the cap **3** and cancelled the fixing on the basis of the attaching and detaching work between the engaging portion **32** of the draining jig **30** and the cap projection portion **18**, it is possible to fix the draining jig **30** to the cap **3** at a time of discharging the oil, and it is possible to improve a workability thereof.

[**0110**] Further, in accordance with the present embodiment, since the flange portion **33** of the draining jig **30** is pressure contacted with the O-ring **17** of the cap **3** so as to seal, in a state in which the draining jig **30** is fixed to the cap **3**, it is possible to more securely prevent the fluid from flowing out to the outer portion from the other portions than the drain passage **35** of the draining jig **30** at a time of discharging the oil.

[**0111**] In this case, the present invention is not limited to the embodiments mentioned above, and can be applied to variously modified embodiments within the scope of the present invention in correspondence to various objects and applications. In other words, in the embodiments mentioned above, the structure is made such that the oil is discharged to the oil receiving plate or the like placed below the draining jig **30** from the lower end opening of the draining jig **30**, however, the structure is not limited to this. For example, the structure is made such that a connection portion **37** (refer to **FIG. 3**) having an outward bulged shape and provided in the lower end portion of the draining jig **30** is connected to one end of an oil discharging hose (not shown), and the oil is discharged via the hose. Accordingly, it is possible to prevent the oil from being scattered at a time of discharging the oil.

[**0112**] Further, in the embodiments mentioned above, the draining jig **30** is exemplified as a jig having an exclusive use of draining, however, the structure is not limited. For example, as shown in **FIG. 4**, the structure may be made such that a draining jig **42** is integrally provided in an attaching and detaching jig **38** for attaching and detaching the cap **3** with respect to the case **2** so as to structure the draining jig. Accordingly, it is possible to discharge the oil and the separate the cap **3** from the case in accordance with a series of works.

[**0113**] Further, in the embodiment mentioned above, the metal seal caused by the contact between the contact portion **25** of the valve member **21** and the cap projection portion **18** is employed, however, the structure is not limited to this. For example, as shown in **FIG. 4**, an internal seal may be achieved by an O-ring **41** attached to the valve member **40**.

What is claimed is:

1. A drain mechanism of a fluid filter comprising

a cap engaged with a case and having a drain hole;

a drain member detachably mounted to said cap from an outer side thereof and closing said drain hole;

a valve member provided in an inner side of said cap and closing said drain hole; and

an elastic means for energizing said valve member in a direction of closing said drain hole.

2. A drain mechanism of a fluid filter as claimed in claim 1, wherein a seal member is interposed between said cap and said drain member attached to said drain hole.

3. A drain mechanism of a fluid filter as claimed in claim 1, wherein a closure of said drain hole achieved by said valve member is cancelled by displacing said valve member against the energizing force of said elastic means by means

of a tubular draining jig inserted to said drain hole, in a state in which said drain member is detached from said cap.

4. A drain mechanism of a fluid filter as claimed in claim 3, wherein a seal structure is interposed between said cap and said draining jig inserted to said drain hole.

5. A drain mechanism of a fluid filter as claimed in claim 3, wherein said cap is provided with an engaged portion which an engaging portion provided in said draining jig is allowed to be engaged with and disengaged from.

6. A fluid filter comprising:

a drain mechanism comprising a cap engaged with a case and having a drain hole, a drain member detachably mounted to said cap from an outer side thereof and closing said drain hole, a valve member provided in an inner side of said cap and closing said drain hole, and an elastic means for energizing said valve member in a direction of closing said drain hole; and

a housing having said drain mechanism and constituted by said case and said cap.

7. A fluid filter as claimed in claim 6, wherein a seal member is interposed between said cap and said drain member attached to said drain hole.

8. A fluid filter as claimed in claim 6, wherein a closure of said drain hole achieved by said valve member is cancelled by displacing said valve member against the energizing force of said elastic means by means of a tubular draining jig inserted to said drain hole, in a state in which said drain member is detached from said cap.

9. A fluid filter as claimed in claim 8, wherein a seal structure is interposed between said cap and said draining jig inserted to said drain hole.

10. A fluid filter as claimed in claim 8, wherein said cap is provided with an engaged portion which an engaging portion provided in said draining jig is allowed to be engaged with and disengaged from.

11. A draining jig used in a fluid filter comprising:

a drain mechanism comprising a cap engaged with a case and having a drain hole, a drain member detachably mounted to said cap from an outer side thereof and closing said drain hole, a valve member provided in an inner side of said cap and closing said drain hole, and an elastic means for energizing said valve member in a direction of closing said drain hole; and

a housing having said drain mechanism and constituted by said case and said cap,

wherein a drain passage of said draining jig is constituted by a center passage extending toward an axial direction of said draining jig, and a communication passage connected to said center passage and open to an outer periphery of said draining jig.

12. A draining jig used in a fluid filter as claimed in claim 11, wherein said draining jig has a flange portion which is in contact with a seal member provided in a bottom portion of said cap.

13. A draining jig used in a fluid filter as claimed in claim 11, wherein said draining jig has a connection portion capable of connecting to a fluid discharging hose.

14. A draining jig used in a fluid filter as claimed in claim 11, wherein said draining jig is integrally provided with an attaching and detaching jig used for attaching and detaching said cap to and from said case.

15. A draining method of a fluid filter comprising:

a drain mechanism comprising a cap engaged with a case and having a drain hole, a drain member detachably mounted to said cap from an outer side thereof and closing said drain hole, a valve member provided in an inner side of said cap and closing said drain hole, and an elastic means for energizing said valve member in a direction of closing said drain hole; and

a housing having said drain mechanism and constituted by said case and said cap,

wherein, said drain member is detached from said cap, and a closure of said drain hole by said drain member is cancelled, thereafter, a tubular draining jig is inserted to said drain hole, and said valve member is displaced against an energizing of said elastic means by said draining jig, thereby canceling a closure of said drain hole by said valve member, and discharging a fluid within a housing to an external portion via a drain passage provided in said draining jig.

16. A draining method of a fluid filter as claimed in claim 15, wherein a seal member is interposed between said cap and said drain member attached to said drain hole.

17. A draining method of a fluid filter as claimed in claim 15, wherein a seal structure is interposed between said cap and said draining jig inserted to said drain hole.

18. A draining method of a fluid filter as claimed in claim 15, wherein said cap is provided with an engaged portion which an engaging portion provided in said draining jig is allowed to be engaged with and disengaged from.

* * * * *