Doc Code: PA..
Document Description: Power of Attorney

PTO/AIA/82A (07-13)
Approved for use through 11/30/2014. OMB 0651-0051
U.S. Patent and Trademark Office; U.S. DEPARTMENT OF COMMERCE
Under the Paperwork Reduction Act of 1995, no persons are required to respond to a collection of information unless it displays a valid OMB control number.

# TRANSMITTAL FOR POWER OF ATTORNEY TO ONE OR MORE REGISTERED PRACTITIONERS

NOTE: This form is to be submitted with the Power of Attorney by Applicant form (PTO/AIA/82B) to identify the application to which the Power of Attorney is directed, in accordance with 37 CFR 1.5, unless the application number and filing date are identified in the Power of Attorney by Applicant form. If neither form PTO/AIA/82A nor form PTO/AIA82B identifies the application to which the Power of Attorney is directed, the Power of Attorney will not be recognized in the application.

| | |
|---|---|
| Application Number | TO BE ASSIGNED |
| Filing Date | Concurrently Herewith |
| First Named Inventor | Mehmet Oguz BICI et al. |
| Title | METHOD FOR CODING AND AN APPARATUS |
| Art Unit | |
| Examiner Name | |
| Attorney Docket Number | 042933/519745 |

**SIGNATURE of Applicant or Patent Practitioner**

| | | | |
|---|---|---|---|
| Signature | /Guy R. Gosnell/ | Date (Optional) | 03/18/2019 |
| Name | Guy R. Gosnell | Registration Number | 34,610 |
| Title (if Applicant is a juristic entity) | Patent Practitioner | | |
| Applicant Name (if Applicant is a juristic entity) | NOKIA TECHNOLOGIES OY | | |

**NOTE:** This form must be signed in accordance with 37 CFR 1.33. See 37 CFR 1.4(d) for signature requirements and certifications. If more than one applicant, use multiple forms.

☐ *Total of _____ forms are submitted.

This collection of information is required by 37 CFR 1.131, 1.32, and 1.33. The information is required to obtain or retain a benefit by the public which is to file (and by the USPTO to process) an application. Confidentiality is governed by 35 U.S.C. 122 and 37 CFR 1.11 and 1.14. This collection is estimated to take 3 minutes to complete, including gathering, preparing, and submitting the completed application form to the USPTO. Time will vary depending upon the individual case. Any comments on the amount of time you require to complete this form and/or suggestions for reducing this burden, should be sent to the Chief Information Officer, U.S. Patent and Trademark Office, U.S. Department of Commerce, P.O. Box 1450, Alexandria, VA 22313-1450. DO NOT SEND FEES OR COMPLETED FORMS TO THIS ADDRESS. **SEND TO: Commissioner for Patents, P.O. Box 1450, Alexandria, VA 22313-1450.**

*If you need assistance in completing the form, call 1-800-PTO-9199 and select option 2.*

Doc Code: PA..
Document Description: Power of Attorney

PTO/AIA/82B (07-13)
Approved for use through 11/30/2014. OMB 0651-0051
U.S. Patent and Trademark Office; U.S. DEPARTMENT OF COMMERCE
Under the Paperwork Reduction Act of 1995, no persons are required to respond to a collection of information unless it displays a valid OMB control number

# POWER OF ATTORNEY BY APPLICANT

I hereby revoke all previous powers of attorney given in the application identified in either the attached transmittal letter or the boxes below.

| Application Number | Filing Date |
|---|---|
| | |

(Note: The boxes above may be left blank if information is provided on form PTO/AIA/82A.)

☑ I hereby appoint the Patent Practitioner(s) associated with the following Customer Number as my/our attorney(s) or agent(s), and to transact all business in the United States Patent and Trademark Office connected therewith for the application referenced in the attached transmittal letter (form PTO/AIA/82A) or identified above: 10949

**OR**

☐ I hereby appoint Practitioner(s) named in the attached list (form PTO/AIA/82C) as my/our attorney(s) or agent(s), and to transact all business in the United States Patent and Trademark Office connected therewith for the patent application referenced in the attached transmittal letter (form PTO/AIA/82A) or identified above. (Note: Complete form PTO/AIA/82C.)

**Please recognize or change the correspondence address for the application identified in the attached transmittal letter or the boxes above to:**

☑ The address associated with the above-mentioned Customer Number

**OR**

☐ The address associated with Customer Number:

**OR**

| | | | | | |
|---|---|---|---|---|---|
| Firm or Individual Name | | | | | |
| Address | | | | | |
| City | | State | | Zip | |
| Country | | | | | |
| Telephone | | Email | | | |

I am the Applicant (if the Applicant is a juristic entity, list the Applicant name in the box):

NOKIA TECHNOLOGIES OY

☐ Inventor or Joint Inventor (title not required below)

☐ Legal Representative of a Deceased or Legally Incapacitated Inventor (title not required below)

☑ Assignee or Person to Whom the Inventor is Under an Obligation to Assign (provide signer's title if applicant is a juristic entity)

☐ Person Who Otherwise Shows Sufficient Proprietary Interest (e.g., a petition under 37 CFR 1.46(b)(2) was granted in the application or is concurrently being filed with this document) (provide signer's title if applicant is a juristic entity)

**SIGNATURE of Applicant for Patent**

The undersigned (whose title is supplied below) is authorized to act on behalf of the applicant (e.g., where the applicant is a juristic entity).

| | | | |
|---|---|---|---|
| Signature | | Date (Optional) | 23 January 2015 |
| Name | Director | | |
| Title | Legal and Intellectual Property | | |

NOTE: Signature - This form must be signed by the applicant in accordance with 37 CFR 1.33. See 37 CFR 1.4 for signature requirements and certifications. If more than one applicant, use multiple forms.

☐ Total of forms are submitted.

This collection of information is required by 37 CFR 1.131, 1.32, and 1.33. The information is required to obtain or retain a benefit by the public which is to file (and by the USPTO to process) an application. Confidentiality is governed by 35 U.S.C. 122 and 37 CFR 1.11 and 1.14. This collection is estimated to take 3 minutes to complete, including gathering, preparing, and submitting the completed application form to the USPTO. Time will vary depending upon the individual case. Any comments on the amount of time you require to complete this form and/or suggestions for reducing this burden, should be sent to the Chief Information Officer, U.S. Patent and Trademark Office, U.S. Department of Commerce, P.O. Box 1450, Alexandria, VA 22313-1450. DO NOT SEND FEES OR COMPLETED FORMS TO THIS ADDRESS. **SEND TO: Commissioner for Patents, P.O. Box 1450, Alexandria, VA 22313-1450.**

*If you need assistance in completing the form, call 1-800-PTO-9199 and select option 2.*

Jukka Nihtilä
Head, Business Development
Legal & IP

# Electronic Patent Application Fee Transmittal

| | |
|---|---|
| **Application Number:** | |
| **Filing Date:** | |
| **Title of Invention:** | METHOD FOR CODING AND AN APPARATUS |
| **First Named Inventor/Applicant Name:** | Mehmet Oguz BICI |
| **Filer:** | Guy Randall Gosnell/Janet Snider |
| **Attorney Docket Number:** | 042933/519745 |

Filed as Large Entity

**Filing Fees for Utility under 35 USC 111(a)**

| Description | Fee Code | Quantity | Amount | Sub-Total in USD($) |
|---|---|---|---|---|
| **Basic Filing:** | | | | |
| UTILITY APPLICATION FILING | 1011 | 1 | 300 | 300 |
| UTILITY SEARCH FEE | 1111 | 1 | 660 | 660 |
| UTILITY EXAMINATION FEE | 1311 | 1 | 760 | 760 |
| **Pages:** | | | | |
| **Claims:** | | | | |
| CLAIMS IN EXCESS OF 20 | 1202 | 10 | 100 | 1000 |
| INDEPENDENT CLAIMS IN EXCESS OF 3 | 1201 | 3 | 460 | 1380 |
| **Miscellaneous-Filing:** | | | | |

| Description | Fee Code | Quantity | Amount | Sub-Total in USD($) |
|---|---|---|---|---|
| **Petition:** | | | | |
| **Patent-Appeals-and-Interference:** | | | | |
| **Post-Allowance-and-Post-Issuance:** | | | | |
| **Extension-of-Time:** | | | | |
| **Miscellaneous:** | | | | |
| | | | **Total in USD ($)** | **4100** |

# Electronic Acknowledgement Receipt

| | |
|---|---|
| **EFS ID:** | 35455593 |
| **Application Number:** | 16356733 |
| **International Application Number:** | |
| **Confirmation Number:** | 3483 |
| **Title of Invention:** | METHOD FOR CODING AND AN APPARATUS |
| **First Named Inventor/Applicant Name:** | Mehmet Oguz BICI |
| **Customer Number:** | 10949 |
| **Filer:** | Guy Randall Gosnell/Janet Snider |
| **Filer Authorized By:** | Guy Randall Gosnell |
| **Attorney Docket Number:** | 042933/519745 |
| **Receipt Date:** | 18-MAR-2019 |
| **Filing Date:** | |
| **Time Stamp:** | 16:43:47 |
| **Application Type:** | Utility under 35 USC 111(a) |

## Payment information:

| | |
|---|---|
| Submitted with Payment | yes |
| Payment Type | DA |
| Payment was successfully received in RAM | $4100 |
| RAM confirmation Number | 031919INTEFSW00004120160605 |
| Deposit Account | |
| Authorized User | |

The Director of the USPTO is hereby authorized to charge indicated fees and credit any overpayment as follows:

## File Listing:

| Document Number | Document Description | File Name | File Size(Bytes)/ Message Digest | Multi Part /.zip | Pages (if appl.) |
|---|---|---|---|---|---|
| 1 | Application Data Sheet | 519745_ADS.PDF | 1828635<br>eef709681ff88df14d2233a6d94020d389acbe81 | no | 9 |
| **Warnings:** | | | | | |
| **Information:** | | | | | |
| 2 | | 519745_Application.pdf | 292170<br>e38fd8a6ef43f58648c274ae4aced8e376018f18 | yes | 60 |

**Multipart Description/PDF files in .zip description**

| Document Description | Start | End |
|---|---|---|
| Abstract | 60 | 60 |
| Claims | 46 | 59 |
| Specification | 1 | 45 |

| | | | | | |
|---|---|---|---|---|---|
| **Warnings:** | | | | | |
| **Information:** | | | | | |
| 3 | Drawings-only black and white line drawings | 519745_Drawings.PDF | 257901<br>68dce893aba7cd5c3f4f434c98400f743bcf0ede | no | 13 |
| **Warnings:** | | | | | |
| **Information:** | | | | | |
| 4 | Oath or Declaration filed | 519745_Declaration.PDF | 327213<br>73b74c8a6c4c004618a63bdc3ee8f3791f1e987e | no | 3 |
| **Warnings:** | | | | | |
| **Information:** | | | | | |
| 5 | Power of Attorney | 519745_POA.pdf | 558171<br>e3d9ac9c38cd1eb15e507ddac7a55ce0ad31e8ca | no | 2 |

| | | | | | |
|---|---|---|---|---|---|
| **Warnings:** | | | | | |
| **Information:** | | | | | |
| 6 | Fee Worksheet (SB06) | fee-info.pdf | 38095<br>09a0fbb89900a04af40245d874c6126f38b6c073 | no | 2 |
| **Warnings:** | | | | | |
| **Information:** | | | | | |
| | | **Total Files Size (in bytes):** | 3302185 | | |

**This Acknowledgement Receipt evidences receipt on the noted date by the USPTO of the indicated documents, characterized by the applicant, and including page counts, where applicable. It serves as evidence of receipt similar to a Post Card, as described in MPEP 503.**

**New Applications Under 35 U.S.C. 111**
**If a new application is being filed and the application includes the necessary components for a filing date (see 37 CFR 1.53(b)-(d) and MPEP 506), a Filing Receipt (37 CFR 1.54) will be issued in due course and the date shown on this Acknowledgement Receipt will establish the filing date of the application.**
**National Stage of an International Application under 35 U.S.C. 371**
**If a timely submission to enter the national stage of an international application is compliant with the conditions of 35 U.S.C. 371 and other applicable requirements a Form PCT/DO/EO/903 indicating acceptance of the application as a national stage submission under 35 U.S.C. 371 will be issued in addition to the Filing Receipt, in due course.**
**New International Application Filed with the USPTO as a Receiving Office**
**If a new international application is being filed and the international application includes the necessary components for an international filing date (see PCT Article 11 and MPEP 1810), a Notification of the International Application Number and of the International Filing Date (Form PCT/RO/105) will be issued in due course, subject to prescriptions concerning national security, and the date shown on this Acknowledgement Receipt will establish the international filing date of the application.**

PTO/AIA/14 (02-18)
Approved for use through 11/30/2020. OMB 0651-0032
U.S. Patent and Trademark Office; U.S. DEPARTMENT OF COMMERCE
Under the Paperwork Reduction Act of 1995, no persons are required to respond to a collection of information unless it contains a valid OMB control number.

| Application Data Sheet 37 CFR 1.76 | Attorney Docket Number | 042933/519745 |
|---|---|---|
| | Application Number | |
| Title of Invention | METHOD FOR CODING AND AN APPARATUS | |

The application data sheet is part of the provisional or nonprovisional application for which it is being submitted. The following form contains the bibliographic data arranged in a format specified by the United States Patent and Trademark Office as outlined in 37 CFR 1.76.
This document may be completed electronically and submitted to the Office in electronic format using the Electronic Filing System (EFS) or the document may be printed and included in a paper filed application.

## Secrecy Order 37 CFR 5.2:

☐ Portions or all of the application associated with this Application Data Sheet may fall under a Secrecy Order pursuant to 37 CFR 5.2 (Paper filers only. Applications that fall under Secrecy Order may not be filed electronically.)

## Inventor Information:

**Inventor 1** Remove

**Legal Name**

| Prefix | Given Name | Middle Name | Family Name | Suffix |
|---|---|---|---|---|
| | Mehmet | Oguz | BICI | |

**Residence Information (Select One)** US Residency ● Non US Residency Active US Military Service

| City | Tampere | Country of Residence i | FI |
|---|---|---|---|

**Mailing Address of Inventor:**

| | | | |
|---|---|---|---|
| Address 1 | Tammelan puistokatu 1-3 D 46 | | |
| Address 2 | | | |
| City | Tampere | State/Province | |
| Postal Code | 33500 | Country i | FI |

**Inventor 2** Remove

**Legal Name**

| Prefix | Given Name | Middle Name | Family Name | Suffix |
|---|---|---|---|---|
| | Jani | | LAINEMA | |

**Residence Information (Select One)** US Residency ◉ Non US Residency Active US Military Service

| City | Tampere | Country of Residence i | FI |
|---|---|---|---|

**Mailing Address of Inventor:**

| | | | |
|---|---|---|---|
| Address 1 | Kisakentankatu 12 B 6 | | |
| Address 2 | | | |
| City | Tampere | State/Province | |
| Postal Code | 33230 | Country i | FI |

**Inventor 3** Remove

**Legal Name**


Amazon.com, Inc., Amazon.com Services LLC - Ex. 1002, Page 000008

Under the Paperwork Reduction Act of 1995, no persons are required to respond to a collection of information unless it contains a valid OMB control number.

| **Application Data Sheet 37 CFR 1.76** | Attorney Docket Number | 042933/519745 |
|---|---|---|
| | Application Number | |
| Title of Invention | METHOD FOR CODING AND AN APPARATUS | |

| Prefix | Given Name | Middle Name | Family Name | Suffix |
|---|---|---|---|---|
| | Kemal | | UGUR | |

**Residence Information (Select One)** US Residency ◉ Non US Residency Active US Military Service

| City | Tampere | Country of Residence i | FI |
|---|---|---|---|

**Mailing Address of Inventor:**

| | | | |
|---|---|---|---|
| **Address 1** | Lapintie 6D 25 | | |
| **Address 2** | | | |
| **City** | Tampere | **State/Province** | |
| **Postal Code** | 33100 | **Country** i | FI |

All Inventors Must Be Listed - Additional Inventor Information blocks may be generated within this form by selecting the **Add** button. Add

## Correspondence Information:

**Enter either Customer Number or complete the Correspondence Information section below. For further information see 37 CFR 1.33(a).**

☐ **An Address is being provided for the correspondence Information of this application.**

| | | | |
|---|---|---|---|
| **Customer Number** | 10949 | | |
| **Email Address** | | Add Email | Remove Email |

## Application Information:

| | | | |
|---|---|---|---|
| **Title of the Invention** | METHOD FOR CODING AND AN APPARATUS | | |
| **Attorney Docket Number** | 042933/519745 | **Small Entity Status Claimed** | ☐ |
| **Application Type** | Nonprovisional | | |
| **Subject Matter** | Utility | | |
| **Total Number of Drawing Sheets (if any)** | 13 | **Suggested Figure for Publication (if any)** | |

## Filing By Reference:

Only complete this section when filing an application by reference under 35 U.S.C. 111(c) and 37 CFR 1.57(a). Do not complete this section if application papers including a specification and any drawings are being filed. Any domestic benefit or foreign priority information must be provided in the appropriate section(s) below (i.e., "Domestic Benefit/National Stage Information" and "Foreign Priority Information").

For the purposes of a filing date under 37 CFR 1.53(b), the description and any drawings of the present application are replaced by this reference to the previously filed application, subject to conditions and requirements of 37 CFR 1.57(a).

| Application number of the previously filed application | Filing date (YYYY-MM-DD) | Intellectual Property Authority or Country i |
|---|---|---|
| | | |


Amazon.com, Inc., Amazon.com Services LLC - Ex. 1002, Page 000009

Under the Paperwork Reduction Act of 1995, no persons are required to respond to a collection of information unless it contains a valid OMB control number.

| **Application Data Sheet 37 CFR 1.76** | Attorney Docket Number | 042933/519745 |
|---|---|---|
| | Application Number | |
| Title of Invention | METHOD FOR CODING AND AN APPARATUS | |

## Publication Information:

☐ Request Early Publication (Fee required at time of Request 37 CFR 1.219)

☐ **Request Not to Publish.** I hereby request that the attached application not be published under 35 U.S.C. 122(b) and certify that the invention disclosed in the attached application **has not and will not** be the subject of an application filed in another country, or under a multilateral international agreement, that requires publication at eighteen months after filing.

## Representative Information:

Representative information should be provided for all practitioners having a power of attorney in the application. Providing this information in the Application Data Sheet does not constitute a power of attorney in the application (see 37 CFR 1.32).
Either enter Customer Number or complete the Representative Name section below. If both sections are completed the customer Number will be used for the Representative Information during processing.

| Please Select One: | ● Customer Number | US Patent Practitioner | ○ Limited Recognition (37 CFR 11.9) |
|---|---|---|---|
| Customer Number | 10949 | | |

## Domestic Benefit/National Stage Information:

This section allows for the applicant to either claim benefit under 35 U.S.C. 119(e), 120, 121, 365(c), or 386(c) or indicate National Stage entry from a PCT application. Providing benefit claim information in the Application Data Sheet constitutes the specific reference required by 35 U.S.C. 119(e) or 120, and 37 CFR 1.78.
When referring to the current application, please leave the "Application Number" field blank.

| Prior Application Status | | | Remove |
|---|---|---|---|
| Application Number | Continuity Type | Prior Application Number | Filing or 371(c) Date (YYYY-MM-DD) |
| | Continuation of | 15/681725 | 2017-08-21 |
| Prior Application Status | | | Remove |
| Application Number | Continuity Type | Prior Application Number | Filing or 371(c) Date (YYYY-MM-DD) |
| 15/681725 | Continuation of | 15/426822 | 2017-02-07 |
| Prior Application Status | | | Remove |
| Application Number | Continuity Type | Prior Application Number | Filing or 371(c) Date (YYYY-MM-DD) |
| 15/426822 | Continuation of | 13/666680 | 2012-11-01 |

Under the Paperwork Reduction Act of 1995, no persons are required to respond to a collection of information unless it contains a valid OMB control number.

| Application Data Sheet 37 CFR 1.76 | Attorney Docket Number | 042933/519745 |
|---|---|---|
| | Application Number | |
| Title of Invention | METHOD FOR CODING AND AN APPARATUS | |

| Prior Application Status | | | Remove |
|---|---|---|---|
| Application Number | Continuity Type | Prior Application Number | Filing or 371(c) Date (YYYY-MM-DD) |
| 13/666680 | Claims benefit of provisional | 61/555703 | 2011-11-04 |
| Additional Domestic Benefit/National Stage Data may be generated within this form by selecting the **Add** button. | | | Add |

## Foreign Priority Information:

This section allows for the applicant to claim priority to a foreign application. Providing this information in the application data sheet constitutes the claim for priority as required by 35 U.S.C. 119(b) and 37 CFR 1.55. When priority is claimed to a foreign application that is eligible for retrieval under the priority document exchange program (PDX)[i] the information will be used by the Office to automatically attempt retrieval pursuant to 37 CFR 1.55(i)(1) and (2). Under the PDX program, applicant bears the ultimate responsibility for ensuring that a copy of the foreign application is received by the Office from the participating foreign intellectual property office, or a certified copy of the foreign priority application is filed, within the time period specified in 37 CFR 1.55(g)(1).

| | | | Remove |
|---|---|---|---|
| Application Number | Country[i] | Filing Date (YYYY-MM-DD) | Access Code[i] (if applicable) |
| | | | |
| Additional Foreign Priority Data may be generated within this form by selecting the **Add** button. | | | Add |

## Statement under 37 CFR 1.55 or 1.78 for AIA (First Inventor to File) Transition Applications

☐ This application (1) claims priority to or the benefit of an application filed before March 16, 2013 and (2) also contains, or contained at any time, a claim to a claimed invention that has an effective filing date on or after March 16, 2013.
NOTE: By providing this statement under 37 CFR 1.55 or 1.78, this application, with a filing date on or after March 16, 2013, will be examined under the first inventor to file provisions of the AIA.

| Application Data Sheet 37 CFR 1.76 | Attorney Docket Number | 042933/519745 |
|---|---|---|
| | Application Number | |
| Title of Invention | METHOD FOR CODING AND AN APPARATUS | |

## Authorization or Opt-Out of Authorization to Permit Access:

When this Application Data Sheet is properly signed and filed with the application, applicant has provided written authority to permit a participating foreign intellectual property (IP) office access to the instant application-as-filed (see paragraph A in subsection 1 below) and the European Patent Office (EPO) access to any search results from the instant application (see paragraph B in subsection 1 below).

Should applicant choose not to provide an authorization identified in subsection 1 below, applicant **must opt-out** of the authorization by checking the corresponding box A or B or both in subsection 2 below.

**NOTE**: This section of the Application Data Sheet is **ONLY** reviewed and processed with the **INITIAL** filing of an application. After the initial filing of an application, an Application Data Sheet cannot be used to provide or rescind authorization for access by a foreign IP office(s). Instead, Form PTO/SB/39 or PTO/SB/69 must be used as appropriate.

**1. Authorization to Permit Access by a Foreign Intellectual Property Office(s)**

**A. Priority Document Exchange (PDX)** - Unless box A in subsection 2 (opt-out of authorization) is checked, the undersigned hereby **grants the USPTO authority** to provide the European Patent Office (EPO), the Japan Patent Office (JPO), the Korean Intellectual Property Office (KIPO), the State Intellectual Property Office of the People's Republic of China (SIPO), the World Intellectual Property Organization (WIPO), and any other foreign intellectual property office participating with the USPTO in a bilateral or multilateral priority document exchange agreement in which a foreign application claiming priority to the instant patent application is filed, access to: (1) the instant patent application-as-filed and its related bibliographic data, (2) any foreign or domestic application to which priority or benefit is claimed by the instant application and its related bibliographic data, and (3) the date of filing of this Authorization. See 37 CFR 1.14(h)(1).

**B. Search Results from U.S. Application to EPO** - Unless box B in subsection 2 (opt-out of authorization) is checked, the undersigned hereby **grants the USPTO authority** to provide the EPO access to the bibliographic data and search results from the instant patent application when a European patent application claiming priority to the instant patent application is filed. See 37 CFR 1.14(h)(2).

The applicant is reminded that the EPO's Rule 141(1) EPC (European Patent Convention) requires applicants to submit a copy of search results from the instant application without delay in a European patent application that claims priority to the instant application.

**2. Opt-Out of Authorizations to Permit Access by a Foreign Intellectual Property Office(s)**

☐ A. Applicant **DOES NOT** authorize the USPTO to permit a participating foreign IP office access to the instant application-as-filed. If this box is checked, the USPTO will not be providing a participating foreign IP office with any documents and information identified in subsection 1A above.

☐ B. Applicant **DOES NOT** authorize the USPTO to transmit to the EPO any search results from the instant patent application. If this box is checked, the USPTO will not be providing the EPO with search results from the instant application.

**NOTE:** Once the application has published or is otherwise publicly available, the USPTO may provide access to the application in accordance with 37 CFR 1.14.

Under the Paperwork Reduction Act of 1995, no persons are required to respond to a collection of information unless it contains a valid OMB control number.

| Application Data Sheet 37 CFR 1.76 | Attorney Docket Number | 042933/519745 |
|---|---|---|
| | Application Number | |
| Title of Invention | METHOD FOR CODING AND AN APPARATUS | |

## Applicant Information:

Providing assignment information in this section does not substitute for compliance with any requirement of part 3 of Title 37 of CFR to have an assignment recorded by the Office.

**Applicant** 1 Remove

If the applicant is the inventor (or the remaining joint inventor or inventors under 37 CFR 1.45), this section should not be completed. The information to be provided in this section is the name and address of the legal representative who is the applicant under 37 CFR 1.43; or the name and address of the assignee, person to whom the inventor is under an obligation to assign the invention, or person who otherwise shows sufficient proprietary interest in the matter who is the applicant under 37 CFR 1.46. If the applicant is an applicant under 37 CFR 1.46 (assignee, person to whom the inventor is obligated to assign, or person who otherwise shows sufficient proprietary interest) together with one or more joint inventors, then the joint inventor or inventors who are also the applicant should be identified in this section.

Clear

| ● Assignee | Legal Representative under 35 U.S.C. 117 | Joint Inventor |
|---|---|---|
| Person to whom the inventor is obligated to assign. | Person who shows sufficient proprietary interest | |

If applicant is the legal representative, indicate the authority to file the patent application, the inventor is:

Name of the Deceased or Legally Incapacitated Inventor:

If the Applicant is an Organization check here. ☒

| Organization Name | NOKIA TECHNOLOGIES OY | | |
|---|---|---|---|
| **Mailing Address Information For Applicant:** | | | |
| **Address 1** | Karaportti 3 | | |
| Address 2 | | | |
| **City** | Espoo | **State/Province** | |
| **Country** | FI | Postal Code | 02610 |
| Phone Number | | Fax Number | |
| Email Address | | | |

Additional Applicant Data may be generated within this form by selecting the Add button. Add

## Assignee Information including Non-Applicant Assignee Information:

Providing assignment information in this section does not substitute for compliance with any requirement of part 3 of Title 37 of CFR to have an assignment recorded by the Office.


Amazon.com, Inc., Amazon.com Services LLC - Ex. 1002, Page 000013

Under the Paperwork Reduction Act of 1995, no persons are required to respond to a collection of information unless it contains a valid OMB control number.

| **Application Data Sheet 37 CFR 1.76** | Attorney Docket Number | 042933/519745 |
|---|---|---|
| | Application Number | |
| Title of Invention | METHOD FOR CODING AND AN APPARATUS | |

**Assignee 1**

Complete this section if assignee information, including non-applicant assignee information, is desired to be included on the patent application publication. An assignee-applicant identified in the "Applicant Information" section will appear on the patent application publication as an applicant. For an assignee-applicant, complete this section only if identification as an assignee is also desired on the patent application publication.

Remove

If the Assignee or Non-Applicant Assignee is an Organization check here. ☒

| Organization Name | NOKIA TECHNOLOGIES OY |
|---|---|

**Mailing Address Information For Assignee including Non-Applicant Assignee:**

| | | | |
|---|---|---|---|
| **Address 1** | Karaportti 3 | | |
| Address 2 | | | |
| **City** | Espoo | **State/Province** | |
| **Country** i | FI | Postal Code | 02610 |
| Phone Number | | Fax Number | |
| Email Address | | | |

Additional Assignee or Non-Applicant Assignee Data may be generated within this form by selecting the Add button. Add

## Signature:

Remove

**NOTE:** This Application Data Sheet must be signed in accordance with 37 CFR 1.33(b). **However, if this Application Data Sheet is submitted with the INITIAL filing of the application and either box A or B is not checked in subsection 2 of the "Authorization or Opt-Out of Authorization to Permit Access" section, then this form must also be signed in accordance with 37 CFR 1.14(c).**

This Application Data Sheet **must** be signed by a patent practitioner if one or more of the applicants is a **juristic entity** (e.g., corporation or association). If the applicant is two or more joint inventors, this form must be signed by a patent practitioner, **all** joint inventors who are the applicant, or one or more joint inventor-applicants who have been given power of attorney (e.g., see USPTO Form PTO/AIA/81) on behalf of **all** joint inventor-applicants.

See 37 CFR 1.4(d) for the manner of making signatures and certifications.

| **Signature** | /Guy R. Gosnell/ | | | Date (YYYY-MM-DD) | 2019-03-18 |
|---|---|---|---|---|---|
| First Name | Guy | Last Name | Gosnell | Registration Number | 34,610 |

Additional Signature may be generated within this form by selecting the Add button. Add


Amazon.com, Inc., Amazon.com Services LLC - Ex. 1002, Page 000014

Under the Paperwork Reduction Act of 1995, no persons are required to respond to a collection of information unless it contains a valid OMB control number.

| **Application Data Sheet 37 CFR 1.76** | Attorney Docket Number | 042933/519745 |
|---|---|---|
| | Application Number | |
| Title of Invention | METHOD FOR CODING AND AN APPARATUS | |

This collection of information is required by 37 CFR 1.76. The information is required to obtain or retain a benefit by the public which is to file (and by the USPTO to process) an application. Confidentiality is governed by 35 U.S.C. 122 and 37 CFR 1.14. This collection is estimated to take 23 minutes to complete, including gathering, preparing, and submitting the completed application data sheet form to the USPTO. Time will vary depending upon the individual case. Any comments on the amount of time you require to complete this form and/or suggestions for reducing this burden, should be sent to the Chief Information Officer, U.S. Patent and Trademark Office, U.S. Department of Commerce, P.O. Box 1450, Alexandria, VA 22313-1450. DO NOT SEND FEES OR COMPLETED FORMS TO THIS ADDRESS. **SEND TO: Commissioner for Patents, P.O. Box 1450, Alexandria, VA 22313-1450.**

# Privacy Act Statement

The Privacy Act of 1974 (P.L. 93-579) requires that you be given certain information in connection with your submission of the attached form related to a patent application or patent. Accordingly, pursuant to the requirements of the Act, please be advised that: (1) the general authority for the collection of this information is 35 U.S.C. 2(b)(2); (2) furnishing of the information solicited is voluntary; and (3) the principal purpose for which the information is used by the U.S. Patent and Trademark Office is to process and/or examine your submission related to a patent application or patent. If you do not furnish the requested information, the U.S. Patent and Trademark Office may not be able to process and/or examine your submission, which may result in termination of proceedings or abandonment of the application or expiration of the patent.

The information provided by you in this form will be subject to the following routine uses:

1 The information on this form will be treated confidentially to the extent allowed under the Freedom of Information Act (5 U.S.C. 552) and the Privacy Act (5 U.S.C. 552a). Records from this system of records may be disclosed to the Department of Justice to determine whether the Freedom of Information Act requires disclosure of these records.

2. A record from this system of records may be disclosed, as a routine use, in the course of presenting evidence to a court, magistrate, or administrative tribunal, including disclosures to opposing counsel in the course of settlement negotiations.

3 A record in this system of records may be disclosed, as a routine use, to a Member of Congress submitting a request involving an individual, to whom the record pertains, when the individual has requested assistance from the Member with respect to the subject matter of the record.

4. A record in this system of records may be disclosed, as a routine use, to a contractor of the Agency having need for the information in order to perform a contract. Recipients of information shall be required to comply with the requirements of the Privacy Act of 1974, as amended, pursuant to 5 U.S.C. 552a(m).

5. A record related to an International Application filed under the Patent Cooperation Treaty in this system of records may be disclosed, as a routine use, to the International Bureau of the World Intellectual Property Organization, pursuant to the Patent CooperationTreaty.

6. A record in this system of records may be disclosed, as a routine use, to another federal agency for purposes of National Security review (35 U.S.C. 181) and for review pursuant to the Atomic Energy Act (42 U.S.C. 218(c)).

7. A record from this system of records may be disclosed, as a routine use, to the Administrator, General Services, or his/her designee, during an inspection of records conducted by GSA as part of that agency's responsibility to recommend improvements in records management practices and programs, under authority of 44 U.S.C. 2904 and 2906. Such disclosure shall be made in accordance with the GSA regulations governing inspection of records for this purpose, and any other relevant (i.e., GSA or Commerce) directive. Such disclosure shall not be used to make determinations about individuals.

8. A record from this system of records may be disclosed, as a routine use, to the public after either publication of the application pursuant to 35 U.S.C. 122(b) or issuance of a patent pursuant to 35 U.S.C. 151. Further, a record may be disclosed, subject to the limitations of 37 CFR 1.14, as a routine use, to the public if the record was filed in an application which became abandoned or in which the proceedings were terminated and which application is referenced by either a published application, an application open to public inspections or an issued patent.

9. A record from this system of records may be disclosed, as a routine use, to a Federal, State, or local law enforcement agency, if the USPTO becomes aware of a violation or potential violation of law or regulation.

## ABSTRACT

The invention relates to a method for encoding, a method for decoding, an apparatus, computer program products, an encoder and a decoder for video information. The motion vector for a block in a video image is predicted from a set of motion vector prediction candidates determined based on previously-coded motion vectors. A motion vector prediction candidate is included in the set based on the location of the block associated with the first spatial motion vector prediction candidate and in comparison with motion vector prediction candidates already in the set.





Amazon.com, Inc., Amazon.com Services LLC - Ex. 1002, Page 000017

Claims:

1. A method comprising:

selecting a first spatial motion vector prediction candidate from a set of spatial motion vector prediction candidates for a block of pixels as a potential spatial motion vector prediction candidate to be included in a motion vector prediction list for a prediction unit of the block of pixels, where the motion vector prediction list comprises motion information of the spatial motion vector prediction candidates and is utilized to identify motion vector prediction candidates of which one spatial motion vector prediction candidate from the motion vector prediction list is signaled as the motion information for the prediction unit;

determining a subset of spatial motion vector prediction candidates based on a location of the block associated with the first spatial motion vector prediction candidate;

comparing motion information of the first spatial motion vector prediction candidate with motion information of spatial motion vector prediction candidates in the determined subset of spatial motion vector prediction candidates without making a comparison of each pair from the set of spatial motion vector prediction candidates;

determining to include or exclude the first spatial motion vector prediction candiate in the motion vector prediction list based on the comparing; and

causing information identifying the one spatial motion vector prediction candidate from the motion vector prediction list to be transmitted to a decoder or to be stored.

2. The method according to claim 1 further comprising selecting spatial motion vector prediction candidates from the set of spatial motion vector prediction candidates as the potential spatial motion vector prediction candidate in a predetermined order.

3. The method according to claim 1, further comprising comparing motion information of the potential spatial motion vector prediction candidate with motion information of at most one other spatial motion vector prediction candidate of the set of spatial motion vector prediction candidates.



Amazon.com, Inc., Amazon.com Services LLC - Ex. 1002, Page 000018

4. The method according to claim 1 further comprising examining whether the block of pixels is divided into a first prediction unit and a second prediction unit; and if so, excluding the potential spatial motion vector prediction candidate from the motion vector prediction list if the prediction unit is the second prediction unit.

5. The method according to claim 1, further comprising

determining a maximum number of spatial motion vector prediction candidates to be included in the motion vector prediction list; and

limiting the number of spatial motion vector prediction candidates in the motion vector prediction list smaller or equal to the maximum number.

6. The method according to claim 5 comprising:

examining, if the number of spatial motion vector prediction candidates in the motion vector prediction list smaller than the maximum number;

if so, examining whether the prediction unit to which the potential spatial motion vector prediction candidate belongs is available for motion prediction;

if so, performing at least one of the following:

for a potential spatial motion vector prediction candidate on a left side of the prediction unit, excluding the potential spatial motion vector prediction candidate from the motion vector prediction list if any of the following conditions are fulfilled:

- the received block of pixels is vertically divided into a first prediction unit and a second prediction unit;
- the received block of pixels is horizontally divided into a first prediction unit and a second prediction unit, and if the prediction unit is the second prediction unit, and the potential spatial motion vector prediction candidate has essentially similar motion information than a spatial motion vector prediction candidate above the prediction unit;

for a potential spatial motion vector prediction candidate above the prediction unit, excluding the potential spatial motion vector prediction candidate from the motion vector prediction list if any of the following conditions are fulfilled:

- the received block of pixels is horizontally divided into a first prediction unit and a second prediction unit, and the prediction unit is the second prediction unit;



Amazon.com, Inc., Amazon.com Services LLC - Ex. 1002, Page 000019

– the potential spatial motion vector prediction candidate has essentially similar motion information than the spatial motion vector prediction candidate on the left side of the prediction unit;

for a potential spatial motion vector prediction candidate, which is on a right side of the potential spatial motion vector prediction candidate above the prediction unit, excluding the potential spatial motion vector prediction candidate from the motion vector prediction list if the potential spatial motion vector prediction candidate has essentially similar motion information than the spatial motion vector prediction candidate above the prediction unit;

for a potential spatial motion vector prediction candidate, which is below the potential spatial motion vector prediction candidate on the left side of the prediction unit, excluding the potential spatial motion vector prediction candidate from the motion vector prediction list if the potential spatial motion vector prediction candidate has essentially similar motion information than the spatial motion vector prediction candidate on the left side of the prediction unit;

for a potential spatial motion vector prediction candidate cornerwise neighbouring the prediction unit, excluding the potential spatial motion vector prediction candidate from the motion vector prediction list if any of the following conditions are fulfilled:

– all the other potential spatial motion vector prediction candidates have been included in the motion vector prediction list;

– the potential spatial motion vector prediction candidate has essentially similar motion information than the spatial motion vector prediction candidate above the prediction unit;

– the potential spatial motion vector prediction candidate has essentially similar motion information than the spatial motion vector prediction candidate on the left side of the prediction unit.

7. The method according to claim 1 further comprising including a temporal motion prediction candidate into the motion vector prediction list.

8. The method according to claim 1 further comprising selecting one motion vector prediction candidate from the motion vector prediction list to represent a motion vector prediction for the block of pixels.



Amazon.com, Inc., Amazon.com Services LLC - Ex. 1002, Page 000020

9. A method comprising:

selecting a first spatial motion vector prediction candidate from a set of spatial motion vector prediction candidates for an encoded block of pixels as a potential spatial motion vector prediction candidate to be included in a motion vector prediction list for a prediction unit of the encoded block of pixels, where the motion vector prediction list comprises motion information of the spatial motion vector prediction candidates;

determining a subset of spatial motion vector prediction candidates based on the location of the block associated with the first spatial motion vector prediction candidate;

comparing motion information of the first spatial motion vector prediction candidate with motion information of another spatial motion vector prediction candidate of the set of spatial motion vector prediction candidates without making a comparison of each possible candidate pair from the set of spatial motion vector prediction candidates;

determining to include or exclude the first spatial motion vector prediction candiate in the motion vector prediction list based on the comparing; and

selecting a spatial motion vector prediction candidate from the motion vector prediction list for use in decoding the encoded block of pixels, wherein the spatial motion vector prediction candidate is selected from the motion vector prediction list using information that was received identifying a respective spatial motion vector prediction candidate from the motion vector prediction list constructed by an encoder.

10. The method according to claim 9 further comprising comparing motion information of the potential spatial motion vector prediction candidate with motion information of at most one other spatial motion vector prediction candidate of the set of spatial motion vector prediction candidates.

11. The method according to claim 9 further comprising examining whether the received encoded block of pixels is divided into a first prediction unit and a second prediction unit; and if so, excluding the potential spatial motion vector prediction candidate from the motion vector prediction list if the prediction unit is the second prediction unit.



Amazon.com, Inc., Amazon.com Services LLC - Ex. 1002, Page 000021

12. The method according to claim 9 further comprising

determining a maximum number of spatial motion vector prediction candidates to be included in the motion vector prediction list; and

limiting the number of spatial motion vector prediction candidates in the motion vector prediction list smaller or equal to the maximum number.

13. The method according to claim 12 further comprising:

examining, if the number of spatial motion vector prediction candidates in the motion vector prediction list smaller than the maximum number;

if so, examining whether the prediction unit to which the potential spatial motion vector prediction candidate belongs is available for motion prediction;

if so, performing at least one of the following:

for a potential spatial motion vector prediction candidate on a left side of the prediction unit, excluding the potential spatial motion vector prediction candidate from the motion vector prediction list if any of the following conditions are fulfilled:

- the received encoded block of pixels is vertically divided into a first prediction unit and a second prediction unit;
- the received encoded block of pixels is horizontally divided into a first prediction unit and a second prediction unit, and if the prediction unit is the second prediction unit, and the potential spatial motion vector prediction candidate has essentially similar motion information than a spatial motion vector prediction candidate above the prediction unit;

for a potential spatial motion vector prediction candidate above the prediction unit, excluding the potential spatial motion vector prediction candidate from the motion vector prediction list if any of the following conditions are fulfilled:

- the received encoded block of pixels is horizontally divided into a first prediction unit and a second prediction unit, and the prediction unit is the second prediction unit;
- the potential spatial motion vector prediction candidate has essentially similar motion information than the spatial motion vector prediction candidate on the left side of the prediction unit;



Amazon.com, Inc., Amazon.com Services LLC - Ex. 1002, Page 000022

for a potential spatial motion vector prediction candidate, which is on a right side of the potential spatial motion vector prediction candidate above the prediction unit, excluding the potential spatial motion vector prediction candidate from the motion vector prediction list if the potential spatial motion vector prediction candidate has essentially similar motion information than the spatial motion vector prediction candidate above the prediction unit;

for a potential spatial motion vector prediction candidate, which is below the potential spatial motion vector prediction candidate on the left side of the prediction unit, excluding the potential spatial motion vector prediction candidate from the motion vector prediction list if the potential spatial motion vector prediction candidate has essentially similar motion information than the spatial motion vector prediction candidate on the left side of the prediction unit; and

for a potential spatial motion vector prediction candidate cornerwise neighbouring the prediction unit, excluding the potential spatial motion vector prediction candidate from the motion vector prediction list if any of the following conditions are fulfilled:

- all the other potential spatial motion vector prediction candidates have been included in the motion vector prediction list;
- the potential spatial motion vector prediction candidate has essentially similar motion information than the spatial motion vector prediction candidate above the prediction unit;
- the potential spatial motion vector prediction candidate has essentially similar motion information than the spatial motion vector prediction candidate on the left side of the prediction unit.

14. The method according to claim 9 further comprising selecting one motion vector prediction candidate from the motion vector prediction list to represent a motion vector prediction for the encoded block of pixels.

15. An apparatus comprising a processor and a memory including computer program code, the memory and the computer program code configured to, with the processor, cause the apparatus to:

select a first spatial motion vector prediction candidate from a set of spatial motion vector prediction candidates for a block of pixels as a potential spatial motion vector prediction



Amazon.com, Inc., Amazon.com Services LLC - Ex. 1002, Page 000023

candidate to be included in a motion vector prediction list for a prediction unit of the block of pixels, where the motion vector prediction list comprises motion information of the spatial motion vector prediction candidates and is utilized to identify motion vector prediction candidates of which one spatial motion vector prediction candidate from the motion vector prediction list is signaled as the motion information for the prediction unit;

determine a subset of spatial motion vector prediction candidates based on the location of the block associated with the first spatial motion vector prediction candidate;

compare motion information of the first spatial motion vector prediction candidate with motion information of the spatial motion vector prediction candidate in the determined subset of spatial motion vector prediction candidates without making a comparison of each possible candidate pair from the set of spatial motion vector prediction candidates;

determine to include or exclude the first spatial motion vector prediction candiate in the motion vector prediction list based on comparison of the motion information of the first spatial motion vector candidate with motion information of the spatial motion vector prediction candidate; and

cause information identifying the one spatial motion vector prediction candidate from the motion vector prediction list to be transmitted to a decoder or to be stored.

16. The apparatus according to claim 15 wherein the apparatus is further caused to select spatial motion vector prediction candidates from the set of spatial motion vector prediction candidates as the potential spatial motion vector prediction candidate in a predetermined order.

17. The apparatus according to claim 15, wherein the apparatus is further caused to compare motion information of the potential spatial motion vector prediction candidate with motion information of at most one other spatial motion vector prediction candidate of the set of spatial motion vector prediction candidates.

18. The apparatus according to claim 15 wherein the apparatus is further caused to examine whether the block of pixels is divided into a first prediction unit and a second prediction unit; and if so, exclude the potential spatial motion vector prediction candidate from the motion vector prediction list if the prediction unit is the second prediction unit.



Amazon.com, Inc., Amazon.com Services LLC - Ex. 1002, Page 000024

19. The apparatus according to claim 15, wherein the apparatus is further caused to:

determine a maximum number of spatial motion vector prediction candidates to be included in the motion vector prediction list; and

limit the number of spatial motion vector prediction candidates in the motion vector prediction list smaller or equal to the maximum number .

20. The apparatus according to claim 19 wherein the apparatus is further caused to:

examine, if the number of spatial motion vector prediction candidates in the motion vector prediction list smaller than the maximum number;

if so, examine whether the prediction unit to which the potential spatial motion vector prediction candidate belongs is available for motion prediction;

if so, perform at least one of the following:

for a potential spatial motion vector prediction candidate on a left side of the prediction unit, exclude the potential spatial motion vector prediction candidate from the motion vector prediction list if any of the following conditions are fulfilled:

- the received block of pixels is vertically divided into a first prediction unit and a second prediction unit;
- the received block of pixels is horizontally divided into a first prediction unit and a second prediction unit, and if the prediction unit is the second prediction unit, and the potential spatial motion vector prediction candidate has essentially similar motion information than a spatial motion vector prediction candidate above the prediction unit;

for a potential spatial motion vector prediction candidate above the prediction unit, exclude the potential spatial motion vector prediction candidate from the motion vector prediction list if any of the following conditions are fulfilled:

- the received block of pixels is horizontally divided into a first prediction unit and a second prediction unit, and the prediction unit is the second prediction unit;
- the potential spatial motion vector prediction candidate has essentially similar motion information than the spatial motion vector prediction candidate on the left side of the prediction unit;



Amazon.com, Inc., Amazon.com Services LLC - Ex. 1002, Page 000025

for a potential spatial motion vector prediction candidate, which is on a right side of the potential spatial motion vector prediction candidate above the prediction unit, exclude the potential spatial motion vector prediction candidate from the motion vector prediction list if the potential spatial motion vector prediction candidate has essentially similar motion information than the spatial motion vector prediction candidate above the prediction unit;

for a potential spatial motion vector prediction candidate, which is below the potential spatial motion vector prediction candidate on the left side of the prediction unit, exclude the potential spatial motion vector prediction candidate from the motion vector prediction list if the potential spatial motion vector prediction candidate has essentially similar motion information than the spatial motion vector prediction candidate on the left side of the prediction unit;

for a potential spatial motion vector prediction candidate cornerwise neighbouring the prediction unit, exclude the potential spatial motion vector prediction candidate from the motion vector prediction list if any of the following conditions are fulfilled:

- all the other potential spatial motion vector prediction candidates have been included in the motion vector prediction list;
- the potential spatial motion vector prediction candidate has essentially similar motion information than the spatial motion vector prediction candidate above the prediction unit;
- the potential spatial motion vector prediction candidate has essentially similar motion information than the spatial motion vector prediction candidate on the left side of the prediction unit.

21. The apparatus according to claim 15 wherein the apparatus is further caused to include a temporal motion prediction candidate into the motion vector prediction list.

22. The apparatus according to claim 15 wherein the apparatus is further caused to select one motion vector prediction candidate from the motion vector prediction list to represent a motion vector prediction for the block of pixels.



Amazon.com, Inc., Amazon.com Services LLC - Ex. 1002, Page 000026

23. An apparatus comprising a processor and a memory including computer program code, the memory and the computer program code configured to, with the processor, cause the apparatus to:

select a first spatial motion vector prediction candidate from a set of spatial motion vector prediction candidates for an encoded block of pixels as a potential spatial motion vector prediction candidate to be included in a motion vector prediction list for a prediction unit of the encoded block of pixels, where the motion vector prediction list comprises motion information of the spatial motion vector prediction candidates;

determine a subset of spatial motion vector prediction candidates based on the location of the block associated with the first spatial motion vector prediction candidate;

compare motion information of the first spatial motion vector prediction candidate with motion information of the spatial motion vector prediction candidate in the determined subset of spatial motion vector prediction candidates without making a comparison of each possible candidate pair from the set of spatial motion vector prediction candidates;

determine to include or exclude the first spatial motion vector prediction candiate in the motion vector prediction list based on comparison of the motion information of the first spatial motion vector candidate with motion information of the spatial motion vector prediction candidate; and

select a spatial motion vector prediction candidate from the motion vector prediction list for use in decoding the encoded block of pixels, wherein the spatial motion vector prediction candidate is selected from the motion vector prediction list using information that was received identifying a respective spatial motion vector prediction candidate from the motion vector prediction list constructed by an encoder.

24. The apparatus according to claim 23 wherein the apparatus is further caused to compare motion information of the potential spatial motion vector prediction candidate with motion information of at most one other spatial motion vector prediction candidate of the set of spatial motion vector prediction candidates.

25. The apparatus according to claim 23 wherein the apparatus is further caused to examine whether the received encoded block of pixels is divided into a first prediction unit and a



Amazon.com, Inc., Amazon.com Services LLC - Ex. 1002, Page 000027

second prediction unit; and if so, exclude the potential spatial motion vector prediction candidate from the motion vector prediction list if the prediction unit is the second prediction unit.

26. The apparatus according to claim 23 wherein the apparatus is further caused to:

determine a maximum number of spatial motion vector prediction candidates to be included in the motion vector prediction list; and

limit the number of spatial motion vector prediction candidates in the motion vector prediction list smaller or equal to the maximum number.

27. The apparatus according to claim 26 wherein the apparatus is further caused to:

examine if the number of spatial motion vector prediction candidates in the motion vector prediction list smaller than the maximum number;

if so, examine whether the prediction unit to which the potential spatial motion vector prediction candidate belongs is available for motion prediction;

if so, perform at least one of the following:

for a potential spatial motion vector prediction candidate on a left side of the prediction unit, exclude the potential spatial motion vector prediction candidate from the motion vector prediction list if any of the following conditions are fulfilled:

- the received encoded block of pixels is vertically divided into a first prediction unit and a second prediction unit;
- the received encoded block of pixels is horizontally divided into a first prediction unit and a second prediction unit, and if the prediction unit is the second prediction unit, and the potential spatial motion vector prediction candidate has essentially similar motion information than a spatial motion vector prediction candidate above the prediction unit;

for a potential spatial motion vector prediction candidate above the prediction unit, exclude the potential spatial motion vector prediction candidate from the motion vector prediction list if any of the following conditions are fulfilled:

- the received encoded block of pixels is horizontally divided into a first prediction unit and a second prediction unit, and the prediction unit is the second prediction unit;



Amazon.com, Inc., Amazon.com Services LLC - Ex. 1002, Page 000028

– the potential spatial motion vector prediction candidate has essentially similar motion information than the spatial motion vector prediction candidate on the left side of the prediction unit;

for a potential spatial motion vector prediction candidate, which is on a right side of the potential spatial motion vector prediction candidate above the prediction unit, exclude the potential spatial motion vector prediction candidate from the motion vector prediction list if the potential spatial motion vector prediction candidate has essentially similar motion information than the spatial motion vector prediction candidate above the prediction unit;

for a potential spatial motion vector prediction candidate, which is below the potential spatial motion vector prediction candidate on the left side of the prediction unit, exclude the potential spatial motion vector prediction candidate from the motion vector prediction list if the potential spatial motion vector prediction candidate has essentially similar motion information than the spatial motion vector prediction candidate on the left side of the prediction unit; and

for a potential spatial motion vector prediction candidate cornerwise neighbouring the prediction unit, exclude the potential spatial motion vector prediction candidate from the motion vector prediction list if any of the following conditions are fulfilled:

– all the other potential spatial motion vector prediction candidates have been included in the motion vector prediction list;

– the potential spatial motion vector prediction candidate has essentially similar motion information than the spatial motion vector prediction candidate above the prediction unit;

– the potential spatial motion vector prediction candidate has essentially similar motion information than the spatial motion vector prediction candidate on the left side of the prediction unit.

28. The apparatus according to claim 23 wherein the apparatus is further caused to select one motion vector prediction candidate from the motion vector prediction list to represent a motion vector prediction for the received encoded block of pixels.



Amazon.com, Inc., Amazon.com Services LLC - Ex. 1002, Page 000029

29. A non-transitory computer readable medium having stored thereon a computer executable program code for use by an encoder, said program codes comprising instructions for:

selecting a first spatial motion vector prediction candidate from a set of spatial motion vector prediction candidates for a block of pixels as a potential spatial motion vector prediction candidate to be included in a motion vector prediction list for a prediction unit of the block of pixels, where the motion vector prediction list comprises motion information of the spatial motion vector prediction candidates and is utilized to identify motion vector prediction candidates of which one spatial motion vector prediction candidate from the motion vector prediction list is signaled as the motion information for the prediction unit;

determining a subset of spatial motion vector prediction candidates based on the location of the block associated with the first spatial motion vector prediction candidate;

comparing motion information of the first spatial motion vector prediction candidate with motion information of the spatial motion vector prediction candidate in the determined subset of spatial motion vector prediction candidates without making a comparison of each possible candidate pair from the set of spatial motion vector prediction candidates;

determining to include or exclude the first spatial motion vector prediction candiate in the motion vector prediction list based on the comparing; and

causing information identifying the one spatial motion vector prediction candidate from the motion vector prediction list to be transmitted to a decoder or to be stored.

30. A non-transitory computer readable medium having stored thereon a computer executable program code for use by an encoder, said program codes comprising instructions for:

selecting a first spatial motion vector prediction candidate from a set of spatial motion vector prediction candidates for an encoded block of pixels as a potential spatial motion vector prediction candidate to be included in a motion vector prediction list for a prediction unit of the encoded block of pixels, where the motion vector prediction list comprises motion information of the spatial motion vector prediction candidates;

determining a subset of spatial motion vector prediction candidates based on the location of the block associated with the first spatial motion vector prediction candidate;

comparing motion information of the first spatial motion vector prediction candidate with motion information of the spatial motion vector prediction candidate in the determined subset of



Amazon.com, Inc., Amazon.com Services LLC - Ex. 1002, Page 000030

spatial motion vector prediction candidates without making a comparison of each possible candidate pair from the set of spatial motion vector prediction candidates;

determining to include or exclude the first spatial motion vector prediction candiate in the motion vector prediction list based on the comparing; and

selecting a spatial motion vector prediction candidate from the motion vector prediction list for use in decoding the encoded block of pixels, wherein the spatial motion vector prediction candidate is selected from the motion vector prediction list using information that was received identifying a respective spatial motion vector prediction candidate from the motion vector prediction list constructed by an encoder.



Amazon.com, Inc., Amazon.com Services LLC - Ex. 1002, Page 000031

# METHOD FOR CODING AND AN APPARATUS

## CROSS-REFERENCE TO RELATED APPLICATIONS

**[0001]** This application is a continuation of U.S. Application No. 15/681,725, filed August 21, 2017, which is a continuation of U.S. Application No. 15/426,822, filed February 7, 2017, which is a continuation of U.S. Application No. 13/666,680, filed November 1, 2012, which claims priority to U.S. Provisional Application No. 61/555,703, filed November 4, 2011, the entire contents of which are incorporated herein by reference.

## TECHNICAL FIELD

**[0002]** There is provided a method for encoding, a method for decoding, an apparatus, computer program products, an encoder and a decoder.

## BACKGROUND INFORMATION

**[0003]** This section is intended to provide a background or context to the invention that is recited in the claims. The description herein may include concepts that could be pursued, but are not necessarily ones that have been previously conceived or pursued. Therefore, unless otherwise indicated herein, what is described in this section is not prior art to the description and claims in this application and is not admitted to be prior art by inclusion in this section

**[0004]** A video codec may comprise an encoder which transforms input video into a compressed representation suitable for storage and/or transmission and a decoder that can uncompress the compressed video representation back into a viewable form, or either one of them. The encoder may discard some information in the original video sequence in order to represent the video in a more compact form, for example at a lower bit rate.

**[0005]** Many hybrid video codecs, operating for example according to the International Telecommunication Union's ITU-T H.263 and H.264 coding standards, encode video information in two phases. In the first phase, pixel values in a certain picture area or "block" are predicted. These pixel values can be predicted, for example, by motion compensation mechanisms, which involve finding and indicating an area in one of the previously encoded video frames (or a later coded video frame) that corresponds closely to the block being coded. Additionally, pixel values can be predicted by spatial mechanisms which involve finding and



Amazon.com, Inc., Amazon.com Services LLC - Ex. 1002, Page 000032

indicating a spatial region relationship, for example by using pixel values around the block to be coded in a specified manner.

**[0006]** Prediction approaches using image information from a previous (or a later) image can also be called as Inter prediction methods, and prediction approaches using image information within the same image can also be called as Intra prediction methods.

**[0007]** The second phase is one of coding the error between the predicted block of pixels and the original block of pixels. This may be accomplished by transforming the difference in pixel values using a specified transform. This transform may be e.g. a Discrete Cosine Transform (DCT) or a variant thereof. After transforming the difference, the transformed difference may be quantized and entropy encoded.

**[0008]** By varying the fidelity of the quantization process, the encoder can control the balance between the accuracy of the pixel representation, (in other words, the quality of the picture) and the size of the resulting encoded video representation (in other words, the file size or transmission bit rate).

**[0009]** The decoder reconstructs the output video by applying a prediction mechanism similar to that used by the encoder in order to form a predicted representation of the pixel blocks (using the motion or spatial information created by the encoder and stored in the compressed representation of the image) and prediction error decoding (the inverse operation of the prediction error coding to recover the quantized prediction error signal in the spatial domain).

**[0010]** After applying pixel prediction and error decoding processes the decoder combines the prediction and the prediction error signals (the pixel values) to form the output video frame.

**[0011]** The decoder (and encoder) may also apply additional filtering processes in order to improve the quality of the output video before passing it for display and/or storing as a prediction reference for the forthcoming frames in the video sequence.

**[0012]** In some video codecs, such as High Efficiency Video Coding Working Draft 4, video pictures may be divided into coding units (CU) covering the area of a picture. A coding unit consists of one or more prediction units (PU) defining the prediction process for the samples within the coding unit and one or more transform units (TU) defining the prediction error coding process for the samples in the coding unit. A coding unit may consist of a square block of samples with a size selectable from a predefined set of possible coding unit sizes. A coding unit with the maximum allowed size can be named as a largest coding unit (LCU) and the video



Amazon.com, Inc., Amazon.com Services LLC - Ex. 1002, Page 000033

picture may be divided into non-overlapping largest coding units. A largest coding unit can further be split into a combination of smaller coding units, e.g. by recursively splitting the largest coding unit and resultant coding units. Each resulting coding unit may have at least one prediction unit and at least one transform unit associated with it. Each prediction unit and transform unit can further be split into smaller prediction units and transform units in order to increase granularity of the prediction and prediction error coding processes, respectively. Each prediction unit may have prediction information associated with it defining what kind of a prediction is to be applied for the pixels within that prediction unit (e.g. motion vector information for inter predicted prediction units and intra prediction directionality information for intra predicted prediction units). Similarly, each transform unit may be associated with information describing the prediction error decoding process for samples within the transform unit (including e.g. discrete cosine transform (DCT) coefficient information). It may be signalled at coding unit level whether prediction error coding is applied or not for each coding unit. In the case there is no prediction error residual associated with the coding unit, it can be considered there are no transform units for the coding unit. The division of the image into coding units, and division of coding units into prediction units and transform units may be signalled in the bitstream allowing the decoder to reproduce the intended structure of these units.

**[0013]** In some video codecs, motion information is indicated by motion vectors associated with each motion compensated image block. These motion vectors represent the displacement of the image block in the picture to be coded (in the encoder) or decoded (at the decoder) and the prediction source block in one of the previously coded or decoded images (or pictures). In order to represent motion vectors efficiently, motion vectors may be coded differentially with respect to block specific predicted motion vector. In some video codecs, the predicted motion vectors are created in a predefined way, for example by calculating the median of the encoded or decoded motion vectors of the adjacent blocks.

**[0014]** Another way to create motion vector predictions is to generate a list or a set of candidate predictions from blocks in the current frame and/or co-located or other blocks in temporal reference pictures and signalling the chosen candidate as the motion vector prediction. A spatial motion vector prediction is a prediction obtained only on the basis of information of one or more blocks of the same frame than the current frame whereas temporal motion vector prediction is a prediction obtained on the basis of information of one or more blocks of a frame



Amazon.com, Inc., Amazon.com Services LLC - Ex. 1002, Page 000034

different from the current frame. It may also be possible to obtain motion vector predictions by combining both spatial and temporal prediction information of one or more encoded blocks. These kinds of motion vector predictions are called as spatio-temporal motion vector predictions.

**[0015]** In addition to predicting the motion vector values, the reference index in the reference picture list can be predicted. The reference index may be predicted from blocks in the current frame and/or co-located or other blocks in a temporal reference picture. Moreover, some high efficiency video codecs employ an additional motion information coding/decoding mechanism, often called merging/merge mode, where all the motion field information, which includes motion vector and corresponding reference picture index for each available reference picture list, may be predicted and used without any modification or correction. Similarly, predicting the motion field information may be carried out using the motion field information of blocks in the current frame and/or co-located or other blocks in temporal reference pictures and the used motion field information is signalled among a list of motion field candidate list filled with motion field information of available blocks in the current frame and/or co-located or other blocks in temporal reference pictures.

**[0016]** In some video codecs the prediction residual after motion compensation is first transformed with a transform kernel (like DCT) and then coded. The reason for this is that often there still exists some correlation among the residual and transform can in many cases help reduce this correlation and provide more efficient coding.

**[0017]** Some video encoders utilize Lagrangian cost functions to find optimal coding modes, e.g. the desired Macroblock mode and associated motion vectors. This kind of cost function uses a weighting factor $\lambda$ to tie together the (exact or estimated) image distortion due to lossy coding methods and the (exact or estimated) amount of information that is required to represent the pixel values in an image area:

$$C = D + \lambda R \quad (1)$$

where C is the Lagrangian cost to be minimized, D is the image distortion (e.g. Mean Squared Error) with the mode and motion vectors considered, and R the number of bits needed to represent the required data to reconstruct the image block in the decoder (including the amount of data to represent the candidate motion vectors).

**[0018]** Some video codecs such as hybrid video codecs may generate a list of motion vector predictions (MVP) consisting of motion vectors of spatial adjacent blocks (spatial MVP) and/or



Amazon.com, Inc., Amazon.com Services LLC - Ex. 1002, Page 000035

motion vectors of blocks in a previously decoded frame (temporal MVP). One of the candidate motion vectors in the list is signalled to be used as the motion vector prediction of the current block. After the list is generated, some of the motion vector prediction candidates may have the same motion information. In this case, the identical motion vector prediction candidates may be removed to reduce redundancy. During the decoding, if the temporal motion vector prediction information is unavailable due to e.g. loss of reference frame, the decoder may not know if the temporal motion vector prediction candidate in the list is to be removed. This may lead to uncertainty for mapping the decoded candidate index to the candidates whose removal decision is based on comparing motion information with the temporal motion vector prediction. As a result, false assignment of motion vector prediction candidates may occur which may lead to degradation in the picture quality and drift of false motion information throughout the decoding process.

## SUMMARY

**[0019]** The present invention introduces a method for generating a motion vector prediction list for an image block. In some embodiments video codecs employ in a motion prediction candidate list construction a way to reduce the complexity of the implementation. This can be achieved by performing a limited number of motion information comparisons between candidate pairs to remove the redundant candidates rather than comparing every available candidate pair. The decision of whether comparing two candidates may depend on the order of the candidates to be considered for the list and/or coding/prediction mode and/or location of the blocks associated with the candidates. In some embodiments a video codec employs a merge process for motion information coding and creates a list of motion prediction candidates from which one of the candidates is to be signalled as the motion information for the current coding or prediction unit. The motion prediction candidates may consist of several spatial motion predictions and a temporal motion prediction. The spatial candidates are obtained from the motion information of e.g. spatial neighbour blocks.

**[0020]** According to a first aspect of the present invention there is provided a method comprising:



Amazon.com, Inc., Amazon.com Services LLC - Ex. 1002, Page 000036

receiving a block of pixels including a prediction unit; determining a set of spatial motion vector prediction candidates for the block of pixels; the spatial motion vector prediction candidates being provided with motion information;

selecting a first spatial motion vector prediction candidate from the set of spatial motion vector prediction candidates as a potential spatial motion vector prediction candidate to be included in a merge list for the prediction unit;

determining a subset of spatial motion vector predictions based on the location of the block associated with the first spatial motion vector prediction candidate;

comparing motion information of the first spatial motion vector prediction candidate with motion information of the spatial motion vector prediction candidate in the determined subset of spatial motion vector prediction candidates;

if at least one of the comparisons indicates that the motion vector information of the spatial motion vector prediction candidates correspond with each other, excluding the first spatial motion vector prediction candidate from the merge list.

**[0021]** According to a second aspect of the present invention there is provided a method comprising:

receiving an encoded block of pixels including a prediction unit;

determining a set of spatial motion vector prediction candidates for the encoded block of pixels; the spatial motion vector prediction candidates being provided with motion information;

selecting a first spatial motion vector prediction candidate from the set of spatial motion vector prediction candidates as a potential spatial motion vector prediction candidate to be included in a merge list for the prediction unit;

determining a subset of spatial motion vector predictions based on the location of the block associated with the first spatial motion vector prediction candidate;

comparing motion information of the first spatial motion vector prediction candidate with motion information of another spatial motion vector prediction candidate of the set of spatial motion vector prediction candidates;

if at least one of the comparisons indicates that the motion vector information of the spatial motion vector prediction candidates correspond with each other, excluding the first spatial motion vector prediction candidate from the merge list.



Amazon.com, Inc., Amazon.com Services LLC - Ex. 1002, Page 000037

**[0022]** According to a third aspect of the present invention there is provided an apparatus comprising a processor and a memory including computer program code, the memory and the computer program code configured to, with the processor, cause the apparatus to:

receive a block of pixels

including a prediction unit;

determining a set of spatial motion vector prediction candidates for the block of pixels; the spatial motion vector prediction candidates being provided with motion information;

selecting a first spatial motion vector prediction candidate from the set of spatial motion vector prediction candidates as a potential spatial motion vector prediction candidate to be included in a merge list for the prediction unit;

determining a subset of spatial motion vector predictions based on the location of the block associated with the first spatial motion vector prediction candidate;

comparing motion information of the first spatial motion vector prediction candidate with motion information of the spatial motion vector prediction candidate in the determined subset of spatial motion vector prediction candidates;

if at least one the comparisons indicates that the motion vector information of the spatial motion vector prediction candidates correspond with each other, excluding the first spatial motion vector prediction candidate from the merge list.

**[0023]** According to a fourth aspect of the present invention there is provided an apparatus comprising a processor and a memory including computer program code, the memory and the computer program code configured to, with the processor, cause the apparatus to:

receive an encoded block of pixels

including a prediction unit;

determining a set of spatial motion vector prediction candidates for the encoded block of pixels; the spatial motion vector prediction candidates being provided with motion information;

selecting a first spatial motion vector prediction candidate from the set of spatial motion vector prediction candidates as a potential spatial motion vector prediction candidate to be included in a merge list for the prediction unit;

determining a subset of spatial motion vector predictions based on the location of the block associated with the first spatial motion vector prediction candidate;



Amazon.com, Inc., Amazon.com Services LLC - Ex. 1002, Page 000038

comparing motion information of the first spatial motion vector prediction candidate with motion information of another spatial motion vector prediction candidate of the set of spatial motion vector prediction candidates;

if at least one of the comparisons indicates that the motion vector information of the spatial motion vector prediction candidates correspond with each other, excluding the first spatial motion vector prediction candidate from the merge list.

**[0024]** According to a fifth aspect of the present invention there is provided a storage medium having stored thereon a computer executable program code for use by an encoder, said program code comprises instructions for:

receiving a block of pixels including a prediction unit;

determining a set of spatial motion vector prediction candidates for the block of pixels; the spatial motion vector prediction candidates being provided with motion information;

select a first spatial motion vector prediction candidate from the set of spatial motion vector prediction candidates as a potential spatial motion vector prediction candidate to be included in a merge list for the prediction unit;

determine a subset of spatial motion vector predictions based on the location of the block associated with the first spatial motion vector prediction candidate;

compare motion information of the first spatial motion vector prediction candidate with motion information of the spatial motion vector prediction candidate in the determined subset of spatial motion vector prediction candidates;

exclude the first spatial motion vector prediction candidate from the merge list, if at least one of the comparisons indicates that the motion vector information of the spatial motion vector prediction candidates correspond with each other

**[0025]** According to a sixth aspect of the present invention there is provided a storage medium having stored thereon a computer executable program code for use by a decoder, said program code comprises instructions for:

receiving an encoded block of pixels including a prediction unit;

determining a set of spatial motion vector prediction candidates for the encoded block of pixels; the spatial motion vector prediction candidates being provided with motion information;



Amazon.com, Inc., Amazon.com Services LLC - Ex. 1002, Page 000039

selecting a first spatial motion vector prediction candidate from the set of spatial motion vector prediction candidates as a potential spatial motion vector prediction candidate to be included in a merge list for the prediction unit;

determining a subset of spatial motion vector predictions based on the location of the block associated with the first spatial motion vector prediction candidate;

comparing motion information of the first spatial motion vector prediction candidate with motion information of the spatial motion vector prediction candidate in the determined subset of spatial motion vector prediction candidates;

if at least one of the comparisons indicates that the motion vector information of the spatial motion vector prediction candidates correspond with each other, excluding the first spatial motion vector prediction candidate from the merge list.

**[0026]** According to a seventh aspect of the present invention there is provided an apparatus comprising:

means for receiving a block of pixels including a prediction unit;

means for determining a set of spatial motion vector prediction candidates for the block of pixels; the spatial motion vector prediction candidates being provided with motion information;

selecting a first spatial motion vector prediction candidate from the set of spatial motion vector prediction candidates as a potential spatial motion vector prediction candidate to be included in a merge list for the prediction unit;

determining a subset of spatial motion vector predictions based on the location of the block associated with the first spatial motion vector prediction candidate;

comparing motion information of the first spatial motion vector prediction candidate with motion information of the spatial motion vector prediction candidate in the determined subset of spatial motion vector prediction candidates;

if at least one of the comparisons indicates that the motion vector information of the spatial motion vector prediction candidates correspond with each other, excluding the first spatial motion vector prediction candidate from the merge list.

**[0027]** According to an eighth aspect of the present invention there is provided an apparatus comprising:

means for receiving an encoded block of pixels including a prediction unit;



Amazon.com, Inc., Amazon.com Services LLC - Ex. 1002, Page 000040

means for determining a set of spatial motion vector prediction candidates for the encoded block of pixels; the spatial motion vector prediction candidates being provided with motion information;

means for selecting a first spatial motion vector prediction candidate from the set of spatial motion vector prediction candidates as a potential spatial motion vector prediction candidate to be included in a merge list for the prediction unit;

means for determining a subset of spatial motion vector predictions based on the location of the block associated with the first spatial motion vector prediction candidate;

means for comparing motion information of the first spatial motion vector prediction candidate with motion information of the spatial motion vector prediction candidate in the determined subset of spatial motion vector prediction candidates;

means for excluding the first spatial motion vector prediction candidate from the merge list, if at least one of the comparisons indicates that the motion vector information of the spatial motion vector prediction candidates correspond with each other.

## DESCRIPTION OF THE DRAWINGS

**[0028]** For better understanding of the present invention, reference will now be made by way of example to the accompanying drawings in which:

**[0029]** Figure 1 shows schematically an electronic device employing some embodiments of the invention;

**[0030]** Figure 2 shows schematically a user equipment suitable for employing some embodiments of the invention;

**[0031]** Figure 3 further shows schematically electronic devices employing embodiments of the invention connected using wireless and wired network connections;

**[0032]** Figure 4a shows schematically an embodiment of the invention as incorporated within an encoder;

**[0033]** Figure 4b shows schematically an embodiment of a prediction reference list generation and modification according to some embodiments of the invention;

**[0034]** Figures 5a and 5b show a flow diagram showing the operation of an embodiment of the invention with respect to the encoder as shown in figure 4a;



Amazon.com, Inc., Amazon.com Services LLC - Ex. 1002, Page 000041

**[0035]** Figure 6a illustrates an example of spatial and temporal prediction of a prediction unit;

**[0036]** Figure 6b illustrates another example of spatial and temporal prediction of a prediction unit;

**[0037]** Figure 7 shows schematically an embodiment of the invention as incorporated within a decoder;

**[0038]** Figures 8a and 8b show a flow diagram of showing the operation of an embodiment of the invention with respect to the decoder shown in figure 7;

**[0039]** Figure 9 illustrates an example of a coding unit and some neighbour blocks of the coding unit;

**[0040]** Figure 10a illustrates an example of a horizontal division of the coding unit;

**[0041]** Figure 10b illustrates an example of a vertical division of the coding unit;

**[0042]** Figure 11a illustrates locations of five spatial neighbours A0, A1, B0, B1, B2 for a prediction unit generated as the second prediction unit of a horizontally divided coding unit;

**[0043]** Figure 11b illustrates locations of five spatial neighbours for a prediction unit generated as the second prediction unit of a vertically divided coding unit; and

**[0044]** Figure 12 illustrates an example of blocks between some spatial neighbours of a coding unit.

## DETAILED DESCRIPTION OF SOME EXAMPLE EMBODIMENTS

**[0045]** The following describes in further detail suitable apparatus and possible mechanisms for the provision of improving the prediction accuracy and hence possibly reducing information to be transmitted in video coding systems. In this regard reference is first made to Figure 1 which shows a schematic block diagram of an exemplary apparatus or electronic device 50, which may incorporate a codec according to an embodiment of the invention.

**[0046]** The electronic device 50 may for example be a mobile terminal or user equipment of a wireless communication system. However, it would be appreciated that embodiments of the invention may be implemented within any electronic device or apparatus which may require encoding and decoding or encoding or decoding video images.

**[0047]** The apparatus 50 may comprise a housing 30 for incorporating and protecting the device. The apparatus 50 further may comprise a display 32 in the form of a liquid crystal



Amazon.com, Inc., Amazon.com Services LLC - Ex. 1002, Page 000042

display. In other embodiments of the invention the display may be any suitable display technology suitable to display an image or video. The apparatus 50 may further comprise a keypad 34. In other embodiments of the invention any suitable data or user interface mechanism may be employed. For example the user interface may be implemented as a virtual keyboard or data entry system as part of a touch-sensitive display. The apparatus may comprise a microphone 36 or any suitable audio input which may be a digital or analogue signal input. The apparatus 50 may further comprise an audio output device which in embodiments of the invention may be any one of: an earpiece 38, speaker, or an analogue audio or digital audio output connection. The apparatus 50 may also comprise a battery 40 (or in other embodiments of the invention the device may be powered by any suitable mobile energy device such as solar cell, fuel cell or clockwork generator). The apparatus may further comprise an infrared port 42 for short range line of sight communication to other devices. In other embodiments the apparatus 50 may further comprise any suitable short range communication solution such as for example a Bluetooth wireless connection or a USB/firewire wired connection.

**[0048]** The apparatus 50 may comprise a controller 56 or processor for controlling the apparatus 50. The controller 56 may be connected to memory 58 which in embodiments of the invention may store both data in the form of image and audio data and/or may also store instructions for implementation on the controller 56. The controller 56 may further be connected to codec circuitry 54 suitable for carrying out coding and decoding of audio and/or video data or assisting in coding and decoding carried out by the controller 56.

**[0049]** The apparatus 50 may further comprise a card reader 48 and a smart card 46, for example a UICC and UICC reader for providing user information and being suitable for providing authentication information for authentication and authorization of the user at a network.

**[0050]** The apparatus 50 may comprise radio interface circuitry 52 connected to the controller and suitable for generating wireless communication signals for example for communication with a cellular communications network, a wireless communications system or a wireless local area network. The apparatus 50 may further comprise an antenna 44 connected to the radio interface circuitry 52 for transmitting radio frequency signals generated at the radio interface circuitry 52 to other apparatus(es) and for receiving radio frequency signals from other apparatus(es).



Amazon.com, Inc., Amazon.com Services LLC - Ex. 1002, Page 000043

**[0051]** In some embodiments of the invention, the apparatus 50 comprises a camera capable of recording or detecting individual frames which are then passed to the codec 54 or controller for processing. In some embodiments of the invention, the apparatus may receive the video image data for processing from another device prior to transmission and/or storage. In some embodiments of the invention, the apparatus 50 may receive either wirelessly or by a wired connection the image for coding/decoding.

**[0052]** With respect to Figure 3, an example of a system within which embodiments of the present invention can be utilized is shown. The system 10 comprises multiple communication devices which can communicate through one or more networks. The system 10 may comprise any combination of wired or wireless networks including, but not limited to a wireless cellular telephone network (such as a GSM, UMTS, CDMA network etc), a wireless local area network (WLAN) such as defined by any of the IEEE 802.x standards, a Bluetooth personal area network, an Ethernet local area network, a token ring local area network, a wide area network, and the Internet.

**[0053]** The system 10 may include both wired and wireless communication devices or apparatus 50 suitable for implementing embodiments of the invention.

**[0054]** For example, the system shown in Figure 3 shows a mobile telephone network 11 and a representation of the internet 28. Connectivity to the internet 28 may include, but is not limited to, long range wireless connections, short range wireless connections, and various wired connections including, but not limited to, telephone lines, cable lines, power lines, and similar communication pathways.

**[0055]** The example communication devices shown in the system 10 may include, but are not limited to, an electronic device or apparatus 50, a combination of a personal digital assistant (PDA) and a mobile telephone 14, a PDA 16, an integrated messaging device (IMD) 18, a desktop computer 20, a notebook computer 22. The apparatus 50 may be stationary or mobile when carried by an individual who is moving. The apparatus 50 may also be located in a mode of transport including, but not limited to, a car, a truck, a taxi, a bus, a train, a boat, an airplane, a bicycle, a motorcycle or any similar suitable mode of transport.

**[0056]** Some or further apparatuses may send and receive calls and messages and communicate with service providers through a wireless connection 25 to a base station 24. The base station 24 may be connected to a network server 26 that allows communication between the



Amazon.com, Inc., Amazon.com Services LLC - Ex. 1002, Page 000044

mobile telephone network 11 and the internet 28. The system may include additional communication devices and communication devices of various types.

**[0057]** The communication devices may communicate using various transmission technologies including, but not limited to, code division multiple access (CDMA), global systems for mobile communications (GSM), universal mobile telecommunications system (UMTS), time divisional multiple access (TDMA), frequency division multiple access (FDMA), transmission control protocol-internet protocol (TCP-IP), short messaging service (SMS), multimedia messaging service (MMS), email, instant messaging service (IMS), Bluetooth, IEEE 802.11 and any similar wireless communication technology. A communications device involved in implementing various embodiments of the present invention may communicate using various media including, but not limited to, radio, infrared, laser, cable connections, and any suitable connection.

**[0058]** With respect to Figure 4a, a block diagram of a video encoder suitable for carrying out embodiments of the invention is shown. Furthermore, with respect to Figures 5a and 5b, the operation of the encoder exemplifying embodiments of the invention specifically with respect to construction of the list of candidate predictions is shown as a flow diagram.

**[0059]** Figure 4a shows the encoder as comprising a pixel predictor 302, prediction error encoder 303 and prediction error decoder 304. Figure 4a also shows an embodiment of the pixel predictor 302 as comprising an inter-predictor 306, an intra-predictor 308, a mode selector 310, a filter 316, and a reference frame memory 318. In this embodiment the mode selector 310 comprises a block processor 381 and a cost evaluator 382. The encoder may further comprise an entropy encoder 330 for entropy encoding the bit stream.

**[0060]** Figure 4b depicts an embodiment of the inter predictor 306. The inter predictor 306 comprises a reference frame selector 360 for selecting reference frame or frames, a motion vector definer 361, a prediction list modifier 363 and a motion vector selector 364. These elements or some of them may be part of a prediction processor 362 or they may be implemented by using other means.

**[0061]** The pixel predictor 302 receives the image 300 to be encoded at both the inter-predictor 306 (which determines the difference between the image and a motion compensated reference frame 318) and the intra-predictor 308 (which determines a prediction for an image block based only on the already processed parts of the current frame or picture). The output of



Amazon.com, Inc., Amazon.com Services LLC - Ex. 1002, Page 000045

both the inter-predictor and the intra-predictor may be passed to the mode selector 310. The intra-predictor 308 may have more than one intra-prediction modes. Hence, each mode may perform the intra-prediction and provide the predicted signal to the mode selector 310. The mode selector 310 also receives a copy of the image 300.

**[0062]** The mode selector 310 determines which encoding mode to use to encode the current block. If the mode selector 310 decides to use an inter-prediction mode it will pass the output of the inter-predictor 306 to the output of the mode selector 310. If the mode selector 310 decides to use an intra-prediction mode it will pass the output of one of the intra-predictor modes to the output of the mode selector 310.

**[0063]** The output of the mode selector is passed to a first summing device 321. The first summing device may subtract the pixel predictor 302 output from the image 300 to produce a first prediction error signal 320 which is input to the prediction error encoder 303.

**[0064]** The pixel predictor 302 further receives from a preliminary reconstructor 339 the combination of the prediction representation of the image block 312 and the output 338 of the prediction error decoder 304. The preliminary reconstructed image 314 may be passed to the intra-predictor 308 and to a filter 316. The filter 316 receiving the preliminary representation may filter the preliminary representation and output a final reconstructed image 340 which may be saved in a reference frame memory 318. The reference frame memory 318 may be connected to the inter-predictor 306 to be used as the reference image against which the future image 300 is compared in inter-prediction operations.

**[0065]** The operation of the pixel predictor 302 may be configured to carry out any known pixel prediction algorithm known in the art.

**[0066]** The pixel predictor 302 may also comprise a filter 385 to filter the predicted values before outputting them from the pixel predictor 302.

**[0067]** The operation of the prediction error encoder 302 and prediction error decoder 304 will be described hereafter in further detail. In the following examples the encoder generates images in terms of 16x16 pixel macroblocks which go to form the full image or picture. Thus, for the following examples the pixel predictor 302 outputs a series of predicted macroblocks of size 16x16 pixels and the first summing device 321 outputs a series of 16x16 pixel residual data macroblocks which may represent the difference between a first macro-block in the image 300



Amazon.com, Inc., Amazon.com Services LLC - Ex. 1002, Page 000046

against a predicted macro-block (output of pixel predictor 302). It would be appreciated that other size macro blocks may be used.

**[0068]** The prediction error encoder 303 comprises a transform block 342 and a quantizer 344. The transform block 342 transforms the first prediction error signal 320 to a transform domain. The transform is, for example, the DCT transform. The quantizer 344 quantizes the transform domain signal, e.g. the DCT coefficients, to form quantized coefficients.

**[0069]** The prediction error decoder 304 receives the output from the prediction error encoder 303 and performs the opposite processes of the prediction error encoder 303 to produce a decoded prediction error signal 338 which when combined with the prediction representation of the image block 312 at the second summing device 339 produces the preliminary reconstructed image 314. The prediction error decoder may be considered to comprise a dequantizer 346, which dequantizes the quantized coefficient values, e.g. DCT coefficients, to reconstruct the transform signal and an inverse transformation block 348, which performs the inverse transformation to the reconstructed transform signal wherein the output of the inverse transformation block 348 contains reconstructed block(s). The prediction error decoder may also comprise a macroblock filter (not shown) which may filter the reconstructed macroblock according to further decoded information and filter parameters.

**[0070]** In the following the operation of an example embodiment of the inter predictor 306 will be described in more detail. The inter predictor 306 receives the current block for inter prediction. It is assumed that for the current block there already exists one or more neighbouring blocks which have been encoded and motion vectors have been defined for them. For example, the block on the left side and/or the block above the current block may be such blocks. Spatial motion vector predictions for the current block can be formed e.g. by using the motion vectors of the encoded neighbouring blocks and/or of non-neighbour blocks in the same slice or frame, using linear or non-linear functions of spatial motion vector predictions, using a combination of various spatial motion vector predictors with linear or non-linear operations, or by any other appropriate means that do not make use of temporal reference information. It may also be possible to obtain motion vector predictors by combining both spatial and temporal prediction information of one or more encoded blocks. These kinds of motion vector predictors may also be called as spatio-temporal motion vector predictors.



Amazon.com, Inc., Amazon.com Services LLC - Ex. 1002, Page 000047

**[0071]** Reference frames used in encoding the neighbouring blocks have been stored to the reference frame memory 404. The reference frames may be short term references or long term references and each reference frame may have a unique index indicative of the location of the reference frame in the reference frame memory. When a reference frame is no longer used as a reference frame it may be removed from the reference frame memory or marked as a non-reference frame wherein the storage location of that reference frame may be occupied for a new reference frame. In addition to the reference frames of the neighbouring blocks the reference frame selector 360 may also select one or more other frames as potential reference frames and store them to the reference frame memory.

**[0072]** Motion vector information of encoded blocks is also stored into the memory so that the inter predictor 306 is able to retrieve the motion vector information when processing motion vector candidates for the current block.

**[0073]** In some embodiments the motion vectors are stored into one or more lists. For example, motion vectors of uni-directionally predicted frames (e.g. P-frames) may be stored to a list called as list 0. For bi-directionally predicted frames (e.g. B-frames) there may be two lists (list 0 and list 1) and for multi-predicted frames there may be more than two lists. Reference frame indices possibly associated with the motion vectors may also be stored in one or more lists.

**[0074]** In some embodiments there may be two or more motion vector prediction procedures and each procedure may have its own candidate set creation process. In one procedure, only the motion vector values are used. In another procedure, which may be called as a Merge Mode, each candidate element may comprise 1) The information whether 'block was uni-predicted using only list0' or 'block was uni-predicted using only list1' or 'block was bi-predicted using list0 and list1' 2) motion vector value for list0 3) Reference picture index in list0 4) motion vector value for list1 5) Reference picture index list1. Therefore, whenever two prediction candidates are to be compared, not only the motion vector values are compared, but also the five values mentioned above may be compared to determine whether they correspond with each other or not. On the other hand, if any of the comparisons indicate that the prediction candidates do not have equal motion information, no further comparisons need be performed.

**[0075]** The motion vector definer 361 defines candidate motion vectors for the current frame by using one or more of the motion vectors of one or more neighbour blocks and/or other blocks



Amazon.com, Inc., Amazon.com Services LLC - Ex. 1002, Page 000048

of the current block in the same frame and/or co-located blocks and/or other blocks of the current block in one or more other frames. These candidate motion vectors can be called as a set of candidate predictors or a predictor set. Each candidate predictor thus represents the motion vector of one or more already encoded block. In some embodiments the motion vector of the candidate predictor is set equal to the motion vector of a neighbour block for the same list if the current block and the neighbour block refer to the same reference frames for that list. Also for temporal prediction there may be one or more previously encoded frames wherein motion vectors of a co-located block or other blocks in a previously encoded frame can be selected as candidate predictors for the current block. The temporal motion vector predictor candidate can be generated by any means that make use of the frames other than the current frame.

**[0076]** The candidate motion vectors can also be obtained by using more than one motion vector of one or more other blocks such as neighbour blocks of the current block and/or co-located blocks in one or more other frames. As an example, any combination of the motion vector of the block to the left of the current block, the motion vector of the block above the current block, and the motion vector of the block at the up-right corner of the current block may be used (i.e. the block to the right of the block above the current block). The combination may be a median of the motion vectors or calculated by using other formulas. For example, one or more of the motion vectors to be used in the combination may be scaled by a scaling factor, an offset may be added, and/or a constant motion vector may be added. In some embodiments the combined motion vector is based on both temporal and spatial motion vectors, e.g. the motion vector of one or more of the neighbour block or other block of the current block and the motion vector of a co-located block or other block in another frame.

**[0077]** If a neighbour block does not have any motion vector information a default motion vector such as a zero motion vector may be used instead.

**[0078]** Figure 9 illustrates an example of a coding unit 900 and some neighbour blocks 901—905 of the coding unit. As can be seen from Figure 9, if the coding unit 900 represents the current block, the neighbouring blocks 901—905 labelled A0, A1, B0, B1 and B2 could be such neighbour blocks which may be used when obtaining the candidate motion vectors.

**[0079]** Creating additional or extra motion vector predictions based on previously added predictors may be needed when the current number of candidates is limited or insufficient. This kind of creating additional candidates can be performed by combining previous two predictions



Amazon.com, Inc., Amazon.com Services LLC - Ex. 1002, Page 000049

and/or processing one previous candidate by scaling or adding offset and/or adding a zero motion vector with various reference indices. Hence, the motion vector definer 361 may examine how many motion vector candidates can be defined and how many potential candidate motion vectors exist for the current block. If the number of potential motion vector candidates is smaller than a threshold, the motion vector definer 361 may create additional motion vector predictions.

**[0080]** In some embodiments the combined motion vector can be based on motion vectors in different lists. For example, one motion vector may be defined by combining one motion vector from the list 0 and one motion vector from the list 1 e.g. when the neighbouring or co-located block is a bi-directionally predicted block and there exists one motion vector in the list 0 and one motion vector in the list 1 for the bi-directionally predicted block.

**[0081]** To distinguish the current block from the encoded/decoded blocks the motion vectors of which are used as candidate motion vectors, those encoded/decoded blocks are also called as reference blocks in this application.

**[0082]** In some embodiments not only the motion vector information of the reference block(s) is obtained (e.g. by copying) but also a reference index of the reference block in the reference picture list may be copied to the candidate list. The information whether the block was uni-predicted using only list0 or the block was uni-predicted using only list1 or the block was bi-predicted using list0 and list1 may also be copied. The candidate list may also be called as a candidate set or a set of motion vector prediction candidates.

**[0083]** Figure 6a illustrates an example of spatial and temporal prediction of a prediction unit. There is depicted the current block 601 in the frame 600 and a neighbour block 602 which already has been encoded. The motion vector definer 361 has defined a motion vector 603 for the neighbour block 602 which points to a block 604 in the previous frame 605. This motion vector can be used as a potential spatial motion vector prediction 610 for the current block. Figure 6a depicts that a co-located block 606 in the previous frame 605, i.e. the block at the same location than the current block but in the previous frame, has a motion vector 607 pointing to a block 609 in another frame 608. This motion vector 607 can be used as a potential temporal motion vector prediction-611 for the current frame.

**[0084]** Figure 6b illustrates another example of spatial and temporal prediction of a prediction unit. In this example the block 606 of the previous frame 605 uses bi-directional prediction based on the block 609 of the frame preceding the frame 605 and on the block 612



Amazon.com, Inc., Amazon.com Services LLC - Ex. 1002, Page 000050

succeeding the current frame 600. The temporal motion vector prediction for the current block 601 may be formed by using both the motion vectors 607, 614 or either of them.

**[0085]** The operation of the prediction list modifier 363 will now be described in more detail with reference to the flow diagram of Figures 5a and 5b. The prediction list modifier 363 initializes a motion vector prediction list to default values in block 500 of Figure 5a. The prediction list modifier 363 may also initialize a list index to an initial value such as zero. Then, in block 501 the prediction list modifier checks whether there are any motion vector candidates to process. If there is at least one motion vector candidate in the predictor set for processing, the prediction list modifier 363 generates the next motion vector candidate which may be a temporal motion vector or a spatial motion vector. The comparison can be an identicality/equivalence check or comparing the (absolute) difference against a threshold or any other similarity metric.

**[0086]** In the following, a merge process for motion information coding according to an example embodiment will be described in more detail. The encoder creates a list of motion prediction candidates from which one of the candidates is to be signalled as the motion information for the current coding unit or prediction unit. The motion prediction candidates may consist of several spatial motion predictions and a temporal motion prediction. The spatial candidates can be obtained from the motion information of e.g. the spatial neighbour blocks A0, A1, B0, B1, B2, whose motion information is used as spatial candidate motion predictions. The temporal motion prediction candidate may be obtained by processing the motion of a block in a frame other than the current frame. In this example embodiment, the encoder operations to construct the merge list for the spatial candidates may include the following. The operations may be carried out by the prediction list modifier 363, for example.

**[0087]** A maximum number of spatial motion prediction candidates to be included in the merge list may be defined. This maximum number may have been stored, for example, to the memory 58 of the apparatus 50, or to another appropriate place. It is also possible to determine the maximum number by using other means, or it may be determined in the software of the encoder of the apparatus 50.

**[0088]** In some embodiments the maximum number of spatial motion prediction candidates to be included in the merge list is four but in some embodiments the maximum number may be less than four or greater than four.



Amazon.com, Inc., Amazon.com Services LLC - Ex. 1002, Page 000051

**[0089]** In this example the spatial motion prediction candidates are the spatial neighbour blocks A0, A1, B0, B1, B2. The spatial motion vector prediction candidate A1 is located on the left side of the prediction unit when the encoding/decoding order is from left to right and from top to bottom of the frame, slice or another entity to be encoded/decoded. Respectively, the spatial motion vector prediction candidate B1 is located above the prediction unit. third; the spatial motion vector prediction candidate B0 is on the right side of the spatial motion vector prediction candidate B1; the spatial motion vector prediction candidate A0 is below the spatial motion vector prediction candidate A1; and the spatial motion vector prediction candidate B2 is located on the same column than spatial motion vector prediction candidate A1 and on the same row than the spatial motion vector prediction candidate B1. In other words, the spatial motion vector prediction candidate B2 is cornerwise neighbouring the prediction unit as can be seen e.g. from Figure 9.

**[0090]** These spatial motion prediction candidates can be processed in a predetermined order, for example, A1, B1, B0, A0 and B2. The first spatial motion prediction candidate to be selected for further examination is thus A1. Before further examination is performed for the selected spatial motion prediction candidate, it may be determined whether the merge list already contains a maximum number of spatial motion prediction candidates. Hence, the prediction list modifier 363 compares 502 the number of spatial motion prediction candidates in the merge list with the maximum number, and if the number of spatial motion prediction candidates in the merge list is not less than the maximum number, the selected spatial motion prediction candidate is not included in the merge list and the process of constructing the merge list can be stopped 526. On the other hand, if the number of spatial motion prediction candidates in the merge list is less than the maximum number, a further analyses of the selected spatial motion prediction candidate is performed (blocks 504-522).

**[0091]** For all the spatial motion prediction candidates for which the further analyses is to be performed, some or all of the following conditions below may be tested for determining whether to include the spatial motion prediction candidate in the merge list.

**[0092]** The prediction list modifier 363 examines 504 if the prediction unit or block covering the spatial motion prediction candidate block is not available for motion prediction. If so, the candidate is not included in the merge list. The reason that the block is not available may be that the block is either coded in intra mode or resides in a different slice or outside of the picture area.



Amazon.com, Inc., Amazon.com Services LLC - Ex. 1002, Page 000052

**[0093]** In addition to the common conditions above, for each spatial motion prediction candidate, if any of the following conditions holds, then the candidate is not included in the merge list, otherwise, it is included.

**[0094]** The prediction list modifier 363 determines 506 which spatial motion prediction candidate of the set of spatial motion prediction candidates is in question. If the spatial motion prediction candidate is the block A1, one or more of the following conditions may be examined 508, 510 to determine whether to include this spatial motion prediction candidate in the merge list or not. If the current coding unit 100 is vertically split into two rectangle prediction units 103, 104 as depicted in Figure 10b and the current prediction unit is the second prediction unit 104 in the coding/decoding order (508), this spatial motion prediction candidate is not included in the merge list. If the current coding unit 100 is not vertically split into two rectangle prediction units but it is horizontally split into two rectangle prediction units 101, 102 as depicted in Figure 10a and the current prediction unit is the second prediction unit in the coding/decoding order and the block A1 has the same motion information as the block B1 (510), this spatial motion prediction candidate (block A1) is not included in the merge list. In the example of Figure 10a the second prediction unit is the lower prediction unit 102 of the coding unit 100 and in the example of Figure 10b the second prediction unit is the rightmost prediction unit 104 of the coding unit 100. If none of the conditions above is fulfilled the block A1 is included in the merge list as a spatial motion prediction candidate (524).

**[0095]** If the spatial motion prediction candidate is the block B1, one or more of the following conditions may be examined 512, 514 to determine whether to include this spatial motion prediction candidate in the merge list or not. If the current coding unit 100 is horizontally split into two rectangle prediction units 101, 102 as depicted in Figure 10a and the current prediction unit is the second prediction unit 104 in the coding/decoding order (512), this spatial motion prediction candidate is not included in the merge list. If the current coding unit 100 is not horizontally split into two rectangle prediction units and if the block B1 has the same motion information than the block A1 (514), this spatial motion prediction candidate (block B1) is not included in the merge list. If none of the conditions above is fulfilled the block B1 is included in the merge list as a spatial motion prediction candidate (524).

**[0096]** If the spatial motion prediction candidate is the block B0, this spatial motion prediction candidate is not included in the merge list if the block B0 has the same motion



Amazon.com, Inc., Amazon.com Services LLC - Ex. 1002, Page 000053

information than the block B1 (516). Otherwise, if the number of spatial motion prediction candidates in the merge list is less than the maximum number of spatial motion prediction candidates, this spatial motion prediction candidate (block B0) is included in the merge list (524).

**[0097]** If the spatial motion prediction candidate is the block A0, this spatial motion prediction candidate is not included in the merge list if the block A0 has the same motion information than the block A1 (518). Otherwise, if the number of spatial motion prediction candidates in the merge list is less than the maximum number of spatial motion prediction candidates, this spatial motion prediction candidate (block A0) is included in the merge list (524).

**[0098]** If the spatial motion prediction candidate is the block B2, this spatial motion prediction candidate is not included in the merge list if the maximum number of spatial motion prediction candidates is four and the other blocks A0, A1, B0, and B1 are all decided to be included in the merge list (520). Otherwise, if the number of spatial motion prediction candidates in the merge list is less than the maximum number of spatial motion prediction candidates, the block B2 is not included in the merge list if the block B2 has the same motion information than the block B1 or the block A1 (522).

**[0099]** Then, after processing the blocks A1, B1, B0, A0 and B2 and including a subset of them in the merge list based on the above described conditions, no more redundancy check between these candidates are performed and remaining temporal motion prediction candidate and/or other possible additional candidates may be processed.

**[00100]** Comparing two blocks whether they have the same motion may be performed by comparing all the elements of the motion information, namely 1) The information whether 'the prediction unit is uni-predicted using only reference picture list0' or 'the prediction unit is uni-predicted using only reference picture list1' or 'the prediction unit is bi-predicted using both reference picture list0 and list1' 2) Motion vector value corresponding to the reference picture list0 3) Reference picture index in the reference picture list0 4) Motion vector value corresponding to the reference picture list1 5) Reference picture index in the reference picture list1.



Amazon.com, Inc., Amazon.com Services LLC - Ex. 1002, Page 000054

**[00101]** In some embodiments similar restrictions for comparing candidate pairs can be applied if the current coding unit is coded/decoded by splitting into four or any number of prediction units.

**[00102]** The maximum number of merge list candidates can be any non-zero value. In the example above the merger list candidates were the spatial neighbour blocks A0, A1, B0, B1, B2 and the temporal motion prediction candidate, but there may be more than one temporal motion prediction candidate and also other spatial motion prediction candidates than the spatial neighbour blocks. In some embodiments there may also be other spatial neighbour blocks than the blocks A0, A1, B0, B1, B2.

**[00103]** It is also possible that the maximum number of spatial motion prediction candidates included in the list can be different than four.

**[00104]** In some embodiments the maximum number of merge list candidates and maximum number of spatial motion prediction candidates included in the list can depend on whether a temporal motion vector candidate is included in the list or not.

**[00105]** A different number of spatial motion prediction candidates located at various locations in the current frame can be processed. The locations can be the same as or different than A1, B1, B0, A0 and B2.

**[00106]** The decision of including which spatial motion prediction candidates in the list can be realized in two steps. In the first step, some of the candidates are eliminated by checking whether the candidate block is available and/or the candidate block's prediction mode is intra and/or whether the current block is a second prediction unit of a coding unit coded with two prediction units and the candidate has the same motion with the first prediction unit. In the second step, remaining candidates are examined and some or all of them are included in the merge list. The examination in the second step does not include comparing motion information of each possible candidate pair but includes a subset of the possible comparison combinations.

**[00107]** The decisions for the candidates can be taken in any order of A1, B1, B0, A0 and B2 or independently in parallel.

**[00108]** For each candidate and/or a subset of the candidates, the following conditions may also be checked: Whether the candidate block has the same motion as the first prediction unit of the current coding unit when the current coding unit is split into two rectangle prediction units and the current prediction unit is the second prediction unit in the coding/decoding order.



Amazon.com, Inc., Amazon.com Services LLC - Ex. 1002, Page 000055

**[00109]** Additional conditions related to various properties of current and/or previous slices and/or current and/or neighbour blocks can be utilized for determining whether to include a candidate in the list.

**[00110]** Motion comparison can be realized by comparing a subset of the whole motion information. For example, only the motion vector values for some or all reference picture lists and/or reference indices for some or all reference picture lists and/or an identifier value assigned to each block to represent its motion information can be compared. The comparison can be an identicality or an equivalence check or comparing the (absolute) difference against a threshold or any other similarity metric.

**[00111]** Conditions for deciding whether a candidate is to be included in the list can include motion information comparison with any subset of the candidates as long as not all possible candidate pairs are compared eventually.

**[00112]** Deciding whether a temporal motion vector candidate is to be included in the list can be based on comparing its motion information with motion information of a subset of the spatial motion vector prediction candidates.

**[00113]** When comparing motion information of two blocks, motion information of additional blocks can be considered too. For example, when comparing the block B2 and the block A1, all the blocks between the block B2 and the block A1 (illustrated in Figure 12) are checked whether they have the same motion; and when comparing the block B2 and the block B1, all the blocks between the block B2 and the block B1 (illustrated in Figure 12) are checked whether they have the same motion. This embodiment can be implemented so that the right-most block of each prediction unit or all blocks of each prediction unit may store the information of how many consecutive blocks to the above have the same motion information. Also the bottom-most block of each prediction unit or all blocks of each prediction unit may store the information of how many consecutive blocks to the left have the same motion information. Using this information the condition for not including B0 in the list can be realized by checking if the number of consecutive blocks with the same motion to the left of B0 is greater than 0. The condition for not including A0 in the list can be realized by checking if the number of consecutive blocks with same motion to the above of A0 is greater than 0. The conditions for not including B2 can be modified as follows:



Amazon.com, Inc., Amazon.com Services LLC - Ex. 1002, Page 000056

**[00114]** It is not examined whether the block B2 has same motion as the block B1 or whether the block B2 has same motion as the block A1, but how many consecutive blocks exists to the left of the block B1 with the same motion than the block B1 and/or how many consecutive blocks exist above the block A1 with the same motion. If the number of consecutive blocks with the same motion to the left of the block B1 is greater than the number of blocks between B2 and B1, or if the number of consecutive blocks with the same motion above the block A1 is greater than the number of blocks between the block B2 and the block A1, the block B2 is not included in the merge list.

**[00115]** If the above implementation is used, the value of how many consecutive blocks to the left/above have the same motion information can be determined by direct comparison of motion information or checking the prediction mode and/or the merge index if the block employs a merge process.

**[00116]** When coding/decoding the selected merge index, the information whether the merge process is employed for coding/decoding a Skip mode coding unit or an Inter Merge mode prediction unit can be taken into account. For example, if a context adaptive binary arithmetic coder (CABAC) is used for entropy coding/decoding, different contexts can be used for the bins depending on the coding mode (Skip mode or inter merge mode) of the current block. Furthermore, assigning two contexts depending on whether the merge process is employed in a Skip mode coding unit or an inter Merge mode prediction unit can be applied for only the most significant bin of the merge index.

**[00117]** During the process of removal of redundant candidates, comparison between motion vector predictor candidates can also be based on any other information than the motion vector values. For example, it can be based on linear or non-linear functions of motion vector values, coding or prediction types of the blocks used to obtain the motion information, block size, the spatial location in the frame/(largest) coding unit/macroblock, the information whether blocks share the same motion with a block, the information whether blocks are in the same coding/prediction unit, etc.

**[00118]** The following pseudo code illustrates an example embodiment of the invention for constructing the merging list.

**[00119]** Inputs to this process are



Amazon.com, Inc., Amazon.com Services LLC - Ex. 1002, Page 000057

– a luma location (xP, yP) specifying the top-left luma sample of the current prediction unit relative to the top-left sample of the current picture;

– variables specifying the width and the height of the prediction unit for luma, nPSW and nPSH; and

– a variable PartIdx specifying the index of the current prediction unit within the current coding unit.

**[00120]** Outputs of this process are (with N being replaced by $A_0$, $A_1$, $B_0$, $B_1$ or $B_2$ and with X being replaced by 0 or 1)

– the availability flags availableFlagN of the neighbouring prediction units,

– the reference indices refIdxLXN of the neighbouring prediction units,

– the prediction list utilization flags predFlagLXN of the neighbouring prediction units,

– the motion vectors mvLXN of the neighbouring prediction units.

**[00121]** For the derivation of availableFlagN, with N being $A_0$, $A_1$, $B_0$, $B_1$ or $B_2$ and (xN, yN) being (xP−1, yP + nPSH), (xP−1, yP + nPSH−1), (xP + nPSW, yP−1), (xP+nPSW−1, yP−1) or (xP−1, yP−1), the following applies.

– If one of the following conditions is true, the availableFlagN is set equal to 0, both components mvLXN are set equal to 0, refIdxLXN and predFlagLX[xN, yN] of the prediction unit covering luma location (xN, yN) are assigned respectively to mvLXN, refIdxLXN and predFlagLXN.

– N is equal to $B_2$ and $availableFlagA_0$ + $availableFlagA_1$ + $availableFlagB_0$ + $availableFlagB_1$ is equal to 4.

– The prediction unit covering luma location (xN, yN) is not available or PredMode is MODE_INTRA.

– N is equal to A1 and PartMode of the current prediction unit is PART_Nx2N or PART_nLx2N or PART_nRx2N and PartIdx is equal to 1.

– N is equal to A1 and PartMode of the current prediction unit is PART_2NxN or PART_2NxnU or PART_2NxnD and PartIdx is equal to 1 and the prediction units covering luma location (xP+nPSW−1, yP−1) (N = B1) and luma location (xN, yN) (Cand. N) have identical motion parameters:

– mvLX[xP+nPSW−1, yP−1] == mvLX[xN, yN]

– refIdxLX[xP+nPSW−1, yP−1] == refIdxLX[xN, yN]



Amazon.com, Inc., Amazon.com Services LLC - Ex. 1002, Page 000058

– predFlagLX[xP+nPSW−1, yP−1] == predFlagLX[xN, yN]

– N is equal to B1 and PartMode of the current prediction unit is 2NxN or PART_2NxnU or PART_2NxnD and PartIdx is equal to 1.

– N is equal to B1 and the prediction units covering luma location (xP−1, yP+nPSH−1) (N = A1) and luma location (xN, yN) (Cand. N) have identical motion parameters:

– mvLX[xP−1, yP+nPSH−1] == mvLX[xN, yN]

– refIdxLX[xP−1, yP+nPSH−1] == refIdxLX[xN, yN]

– predFlagLX[xP−1, yP+nPSH−1] == predFlagLX[xN, yN]

– N is equal to B0 and the prediction units covering luma location (xP+nPSW−1, yP−1) (N = B1) and luma location (xN, yN) (Cand. N) have identical motion parameters:

– mvLX[xP+nPSW−1, yP−1] == mvLX[xN, yN]

– refIdxLX[xP+nPSW−1, yP−1] == refIdxLX[xN, yN]

– predFlagLX[xP+nPSW−1, yP−1] == predFlagLX[xN, yN]

– N is equal to A0 and the prediction units covering luma location (xP−1, yP+nPSH−1) (N = A1) and luma location (xN, yN) (Cand. N) have identical motion parameters:

– mvLX[xP−1, yP+nPSH−1] == mvLX[xN, yN]

– refIdxLX[xP−1, yP+nPSH−1] == refIdxLX[xN, yN]

– predFlagLX[xP−1, yP+nPSH−1] == predFlagLX[xN, yN]

– N is equal to B2 and the prediction units covering luma location (xP+nPSW−1, yP−1) (N = B1) and luma location (xN, yN) (Cand. N) have identical motion parameters:

– mvLX[xP+nPSW−1, yP−1] == mvLX[xN, yN]

– refIdxLX[xP+nPSW−1, yP−1] == refIdxLX[xN, yN]

– predFlagLX[xP+nPSW−1, yP−1] == predFlagLX[xN, yN]

– N is equal to B2 and the prediction units covering luma location (xP−1, yP+nPSH−1) (N = A1) and luma location (xN, yN) (Cand. N) have identical motion parameters:

– mvLX[xP−1, yP+nPSH−1] == mvLX[xN, yN]

– refIdxLX[xP−1, yP+nPSH−1] == refIdxLX[xN, yN]

– predFlagLX[xP−1, yP+nPSH−1] == predFlagLX[xN, yN]

– PartMode of the current prediction unit is PART_NxN and PartIdx is equal to 3 and the prediction units covering luma location (xP−1, yP) (PartIdx = 2) and luma location (xP−1, yP−1) (PartIdx = 0) have identical motion parameters:



Amazon.com, Inc., Amazon.com Services LLC - Ex. 1002, Page 000059

– mvLX[xP−1, yP] == mvLX[xP−1, yP−1]

– refIdxLX[xP−1, yP] == refIdxLX[xP−1, yP−1]

– predFlagLX[xP−1, yP] == predFlagLX[xP−1, yP−1]

and the prediction units covering luma location (xP, yP−1) (PartIdx = 1) and luma location (xN, yN) (Cand. N) have identical motion parameters:

– mvLX[xP, yP−1] == mvLX[xN, yN]

– refIdxLX[xP, yP−1] == refIdxLX[xN, yN]

– predFlagLX[xP, yP−1] == predFlagLX[xN, yN]

– PartMode of the current prediction unit is PART_NxN and PartIdx is equal to 3 and the prediction units covering luma location (xP, yP−1) (PartIdx = 1) and luma location (xP−1, yP−1) (PartIdx = 0) have identical motion parameters:

– mvLX[xP, yP−1] == mvLX[xP−1, yP−1]

– refIdxLX[xP, yP−1] == refIdxLX[xP−1, yP−1]

– predFlagLX[xP, yP−1] == predFlagLX[xP−1, yP−1]

and the prediction units covering luma location (xP−1, yP) (PartIdx = 2) and luma location (xN, yN) (Cand. N) have identical motion parameters:

– mvLX[xP−1, yP] == mvLX[xN, yN]

– refIdxLX[xP−1, yP] == refIdxLX[xN, yN]

– predFlagLX[xP−1, yP] == predFlagLX[xN, yN]

– Otherwise, availableFlagN is set equal to 1 and the variables mvLX[xN, yN], refIdxLX[xN, yN] and predFlagLX[xN, yN] of the prediction unit covering luma location (xN, yN) are assigned respectively to mvLXN, refIdxLXN and predFlagLXN.

**[00122]** For the motion vector predictor candidate list generation process, each list candidate can include more information than the motion vector value, such as the reference lists used, the reference frames used in each list and motion vector for each list.

**[00123]** When all motion vector candidates have been examined, one motion vector is selected to be used as the motion vector for the current block. The motion vector selector 364 may examine different motion vectors in the list and determine which motion vector provides the most efficient encoding result, or the selection of the motion vector may be based on to other criteria as well. Information of the selected motion vector is provided for the mode selector for encoding and transmission to the decoder or for storage when the mode selector determines to



Amazon.com, Inc., Amazon.com Services LLC - Ex. 1002, Page 000060

use inter prediction for the current block. The information may include the index of the motion vector in the list, and/or motion vector parameters or other appropriate information.

**[00124]** The selected motion vector and the block relating to the motion vector is used to generate the prediction representation of the image block 312 which is provided as the output of the mode selector. The output may be used by the first summing device 321 to produce the first prediction error signal 320, as was described above.

**[00125]** The selected motion vector predictor candidate can be modified by adding a motion vector difference or can be used directly as the motion vector of the block. Moreover, after the motion compensation is performed by using the selected motion vector predictor candidate, the residual signal of the block can be transform coded or skipped to be coded.

**[00126]** Although the embodiments above have been described with respect to the size of the macroblock being 16x16 pixels, it would be appreciated that the methods and apparatus described may be configured to handle macroblocks of different pixel sizes.

**[00127]** In the following the operation of an example embodiment of the decoder 600 is depicted in more detail with reference to Figure 7.

**[00128]** At the decoder side similar operations are performed to reconstruct the image blocks. Figure 7 shows a block diagram of a video decoder 700 suitable for employing embodiments of the invention and Figures 8a and 8b show a flow diagram of an example of a method in the video decoder. The bitstream to be decoded may be received from the encoder, from a network element, from a storage medium or from another source. The decoder is aware of the structure of the bitstream so that it can determine the meaning of the entropy coded codewords and may decode the bitstream by an entropy decoder 701 which performs entropy decoding on the received signal. The entropy decoder thus performs the inverse operation to the entropy encoder 330 of the encoder described above. The entropy decoder 701 outputs the results of the entropy decoding to a prediction error decoder 702 and a pixel predictor 704.

**[00129]** In some embodiments the entropy coding may not be used but another channel encoding may be in use, or the encoded bitstream may be provided to the decoder 700 without channel encoding. The decoder 700 may comprise a corresponding channel decoder to obtain the encoded codewords from the received signal.

**[00130]** The pixel predictor 704 receives the output of the entropy decoder 701. The output of the entropy decoder 701 may include an indication on the prediction mode used in encoding the



Amazon.com, Inc., Amazon.com Services LLC - Ex. 1002, Page 000061

current block. A predictor selector 714 within the pixel predictor 704 determines that an intra-prediction or an inter-prediction is to be carried out. The predictor selector 714 may furthermore output a predicted representation of an image block 716 to a first combiner 713. The predicted representation of the image block 716 is used in conjunction with the reconstructed prediction error signal 712 to generate a preliminary reconstructed image 718. The preliminary reconstructed image 718 may be used in the predictor 714 or may be passed to a filter 720. The filter 720, if used, applies a filtering which outputs a final reconstructed signal 722. The final reconstructed signal 722 may be stored in a reference frame memory 724, the reference frame memory 724 further being connected to the predictor 714 for prediction operations.

**[00131]** Also the prediction error decoder 702 receives the output of the entropy decoder 701. A dequantizer 792 of the prediction error decoder 702 may dequantize the output of the entropy decoder 701 and the inverse transform block 793 may perform an inverse transform operation to the dequantized signal output by the dequantizer 792. The output of the entropy decoder 701 may also indicate that prediction error signal is not to be applied and in this case the prediction error decoder produces an all zero output signal.

**[00132]** The decoder selects the 16x16 pixel residual macroblock to reconstruct. This residual macroblock is also called as a current block.

**[00133]** The decoder may receive information on the encoding mode used in encoding of the current block. The indication is decoded, when necessary, and provided to the reconstruction processor 791 of the prediction selector 714. The reconstruction processor 791 examines the indication and selects one of the intra-prediction mode(s), if the indication indicates that the block has been encoded using intra-prediction, or the inter-prediction mode, if the indication indicates that the block has been encoded using inter-prediction.

**[00134]** For inter-prediction mode the reconstruction processor 791 may comprise one or more elements corresponding to the prediction processor 362 of the encoder, such as a motion vector definer, a prediction list modifier and/or a motion vector selector.

**[00135]** The reconstruction processor 791 initializes a motion vector prediction list to default values in block 800. As was the case in the encoding part, in this example the spatial motion prediction candidates are the spatial neighbour blocks A0, A1, B0, B1, B2 and these spatial motion prediction candidates are processed in the same predetermined order than in the encoder: A1, B1, B0, A0 and B2. The first spatial motion prediction candidate to be selected for further



Amazon.com, Inc., Amazon.com Services LLC - Ex. 1002, Page 000062

examination is thus A1. Before further examination is performed for the selected spatial motion prediction candidate, it is examined whether the merge list already contains a maximum number of spatial motion prediction candidates. If the number of spatial motion prediction candidates in the merge list is not less than the maximum number, the selected spatial motion prediction candidate is not included in the merge list and the process of constructing the merge list can be stopped 826. On the other hand, if the number of spatial motion prediction candidates in the merge list is less than the maximum number, a further analyses of the selected spatial motion prediction candidate is performed (blocks 804-822).

**[00136]** The decoder examines 804 if the prediction unit or block covering the spatial motion prediction candidate block is not available for motion prediction. If so, the candidate is not included in the merge list. The reason that the block is not available may be that the block is either coded in intra mode or resides in a different slice or outside of the picture area.

**[00137]** In addition to the common conditions above, for each spatial motion prediction candidate, if any of the following conditions holds, then the candidate is not included in the merge list, otherwise, it is included.

**[00138]** The decoder determines 806 which spatial motion prediction candidate of the set of spatial motion prediction candidates is in question. If the spatial motion prediction candidate is the block A1, one or more of the following conditions may be examined 808, 810 to determine whether to include this spatial motion prediction candidate in the merge list or not. If the current coding unit 100 is vertically split into two rectangle prediction units 103, 104 as depicted in Figure 10b and the current prediction unit is the second prediction unit 104 in the coding/decoding order (808), this spatial motion prediction candidate is not included in the merge list. If the current coding unit 100 is not vertically split into two rectangle prediction units but it is horizontally split into two rectangle prediction units 101, 102 as depicted in Figure 10a and the current prediction unit is the second prediction unit in the coding/decoding order and the block A1 has the same motion information as the block B1 (810), this spatial motion prediction candidate (block A1) is not included in the merge list. In the example of Figure 10a the second prediction unit is the lower prediction unit 102 of the coding unit 100 and in the example of Figure 10b the second prediction unit is the rightmost prediction unit 104 of the coding unit 100. If none of the conditions above is fulfilled the block A1 is included in the merge list as a spatial motion prediction candidate (824).



Amazon.com, Inc., Amazon.com Services LLC - Ex. 1002, Page 000063

**[00139]** If the spatial motion prediction candidate is the block B1, one or more of the following conditions may be examined 812, 814 to determine whether to include this spatial motion prediction candidate in the merge list or not. If the current coding unit 100 is horizontally split into two rectangle prediction units 101, 102 as depicted in Figure 10a and the current prediction unit is the second prediction unit 104 in the coding/decoding order (812), this spatial motion prediction candidate is not included in the merge list. If the current coding unit 100 is not horizontally split into two rectangle prediction units and if the block B1 has the same motion information than the block A1 (814), this spatial motion prediction candidate (block B1) is not included in the merge list. If none of the conditions above is fulfilled the block B1 is included in the merge list as a spatial motion prediction candidate (824).

**[00140]** If the spatial motion prediction candidate is the block B0, this spatial motion prediction candidate is not included in the merge list if the block B0 has the same motion information than the block B1 (816). Otherwise, if the number of spatial motion prediction candidates in the merge list is less than the maximum number of spatial motion prediction candidates, this spatial motion prediction candidate (block B0) is included in the merge list (824).

**[00141]** If the spatial motion prediction candidate is the block A0, this spatial motion prediction candidate is not included in the merge list if the block A0 has the same motion information than the block A1 (818). Otherwise, if the number of spatial motion prediction candidates in the merge list is less than the maximum number of spatial motion prediction candidates, this spatial motion prediction candidate (block A0) is included in the merge list (824).

**[00142]** If the spatial motion prediction candidate is the block B2, this spatial motion prediction candidate is not included in the merge list if the maximum number of spatial motion prediction candidates is four and the other blocks A0, A1, B0, and B1 are all decided to be included in the merge list (820). Otherwise, if the number of spatial motion prediction candidates in the merge list is less than the maximum number of spatial motion prediction candidates, the block B2 is not included in the merge list if the block B2 has the same motion information than the block B1 or the block A1 (822).

**[00143]** Then, after processing the blocks A1, B1, B0, A0 and B2 and including a subset of them in the merge list based on the above described conditions, no more redundancy check



Amazon.com, Inc., Amazon.com Services LLC - Ex. 1002, Page 000064

between these candidates are performed and remaining temporal motion prediction candidate and/or other possible additional candidates may be processed.

**[00144]** When the merge list has been constructed the decoder may use 828 the indication of the motion vector received from the encoder to select the motion vector for decoding the current block. The indication may be, for example, an index to the merge list.

**[00145]** Basically, after the reconstruction processor 791 has constructed the merge list, it would correspond with the merge list constructed by the encoder if the reconstruction processor 791 has the same information available than the encoder had. If some information has been lost during transmission the information from the encoder to the decoder, it may affect the generation of the merge list in the decoder 700.

**[00146]** The above examples describe the operation mainly in the merge mode but the encoder and decoder may also operate in other modes.

**[00147]** The embodiments of the invention described above describe the codec in terms of separate encoder and decoder apparatus in order to assist the understanding of the processes involved. However, it would be appreciated that the apparatus, structures and operations may be implemented as a single encoder-decoder apparatus/structure/operation. Furthermore in some embodiments of the invention the coder and decoder may share some or all common elements.

**[00148]** Although the above examples describe embodiments of the invention operating within a codec within an electronic device, it would be appreciated that the invention as described below may be implemented as part of any video codec. Thus, for example, embodiments of the invention may be implemented in a video codec which may implement video coding over fixed or wired communication paths.

**[00149]** Thus, user equipment may comprise a video codec such as those described in embodiments of the invention above.

**[00150]** It shall be appreciated that the term user equipment is intended to cover any suitable type of wireless user equipment, such as mobile telephones, portable data processing devices or portable web browsers.

**[00151]** Furthermore elements of a public land mobile network (PLMN) may also comprise video codecs as described above.

**[00152]** In general, the various embodiments of the invention may be implemented in hardware or special purpose circuits, software, logic or any combination thereof. For example,



Amazon.com, Inc., Amazon.com Services LLC - Ex. 1002, Page 000065

some aspects may be implemented in hardware, while other aspects may be implemented in firmware or software which may be executed by a controller, microprocessor or other computing device, although the invention is not limited thereto. While various aspects of the invention may be illustrated and described as block diagrams, flow charts, or using some other pictorial representation, it is well understood that these blocks, apparatus, systems, techniques or methods described herein may be implemented in, as non-limiting examples, hardware, software, firmware, special purpose circuits or logic, general purpose hardware or controller or other computing devices, or some combination thereof.

**[00153]** The embodiments of this invention may be implemented by computer software executable by a data processor of the mobile device, such as in the processor entity, or by hardware, or by a combination of software and hardware. Further in this regard it should be noted that any blocks of the logic flow as in the Figures may represent program steps, or interconnected logic circuits, blocks and functions, or a combination of program steps and logic circuits, blocks and functions. The software may be stored on such physical media as memory chips, or memory blocks implemented within the processor, magnetic media such as hard disk or floppy disks, and optical media such as for example DVD and the data variants thereof, CD.

**[00154]** The memory may be of any type suitable to the local technical environment and may be implemented using any suitable data storage technology, such as semiconductor based memory devices, magnetic memory devices and systems, optical memory devices and systems, fixed memory and removable memory. The data processors may be of any type suitable to the local technical environment, and may include one or more of general purpose computers, special purpose computers, microprocessors, digital signal processors (DSPs) and processors based on multi core processor architecture, as non limiting examples.

**[00155]** Embodiments of the inventions may be practiced in various components such as integrated circuit modules. The design of integrated circuits is by and large a highly automated process. Complex and powerful software tools are available for converting a logic level design into a semiconductor circuit design ready to be etched and formed on a semiconductor substrate.

**[00156]** Programs, such as those provided by Synopsys, Inc. of Mountain View, California and Cadence Design, of San Jose, California automatically route conductors and locate components on a semiconductor chip using well established rules of design as well as libraries of pre stored design modules. Once the design for a semiconductor circuit has been completed, the



Amazon.com, Inc., Amazon.com Services LLC - Ex. 1002, Page 000066

resultant design, in a standardized electronic format (e.g., Opus, GDSII, or the like) may be transmitted to a semiconductor fabrication facility or "fab" for fabrication.

**[00157]** The foregoing description has provided by way of exemplary and non-limiting examples a full and informative description of the exemplary embodiment of this invention. However, various modifications and adaptations may become apparent to those skilled in the relevant arts in view of the foregoing description, when read in conjunction with the accompanying drawings and the appended claims. However, all such and similar modifications of the teachings of this invention will still fall within the scope of this invention.

**[00158]** In the following some examples will be provided.

**[00159]** In some embodiments a method comprises:

receiving a block of pixels including a prediction unit; determining a set of spatial motion vector prediction candidates for the block of pixels; the spatial motion vector prediction candidates being provided with motion information;

selecting a first spatial motion vector prediction candidate from the set of spatial motion vector prediction candidates as a potential spatial motion vector prediction candidate to be included in a merge list for the prediction unit;

determining a subset of spatial motion vector predictions based on the location of the block associated with the first spatial motion vector prediction candidate;

comparing motion information of the first spatial motion vector prediction candidate with motion information of the spatial motion vector prediction candidate in the determined subset of spatial motion vector prediction candidates;

if at least one of the comparisons indicates that the motion vector information of the spatial motion vector prediction candidates correspond with each other, excluding the first spatial motion vector prediction candidate from the merge list.

**[00160]** In some embodiments the method comprises including neighbouring blocks of the received block of pixels in the set of spatial motion vector prediction candidates.

**[00161]** In some embodiments the method comprises constructing the set of spatial motion vector predictions by using motion vectors of one or more encoded blocks in a same frame than the block of pixels.



Amazon.com, Inc., Amazon.com Services LLC - Ex. 1002, Page 000067

**[00162]** In some embodiments the method comprises selecting spatial motion vector prediction candidates from the set of spatial motion vector prediction candidates as the potential spatial motion vector prediction candidate in a predetermined order.

**[00163]** In some embodiments the method comprises comparing motion information of the potential spatial motion vector prediction candidate with motion information of at most one other spatial motion vector prediction candidate of the set of spatial motion vector prediction candidates.

**[00164]** In some embodiments the method comprises prediction unit and a second prediction unit; and if so, excluding the potential spatial motion vector prediction candidate from the merge list if the prediction unit is the second prediction unit.

**[00165]** In some embodiments the method comprises

determining a maximum number of spatial motion vector prediction candidates to be included in a merge list; and

limiting the number of spatial motion vector prediction candidates in the merge list smaller or equal to the maximum number .

**[00166]** In some embodiments the method comprises

examining, if the number of spatial motion vector prediction candidates in the merge list smaller than the maximum number;

if so, examining whether a prediction unit to which the potential spatial motion vector prediction candidate belongs is available for motion prediction;

if so, performing at least one of the following:

for the potential spatial motion vector prediction candidate on the left side of the prediction unit, excluding the potential spatial motion vector prediction candidate from the merge list if any of the following conditions are fulfilled:

– the received block of pixels is vertically divided into a first prediction unit and a second prediction unit, and the prediction unit is the second prediction unit;

– the received block of pixels is horizontally divided into a first prediction unit and a second prediction unit, and if the prediction unit is the second prediction unit, and the potential spatial motion vector prediction candidate has essentially similar motion information than the spatial motion vector prediction candidate above the prediction unit;



Amazon.com, Inc., Amazon.com Services LLC - Ex. 1002, Page 000068

for the potential spatial motion vector prediction candidate above the prediction unit, excluding the potential spatial motion vector prediction candidate from the merge list if any of the following conditions are fulfilled:

– the received block of pixels is horizontally divided into a first prediction unit and a second prediction unit, and the prediction unit is the second prediction unit;

– the potential spatial motion vector prediction candidate has essentially similar motion information than the spatial motion vector prediction candidate on the left side of the prediction unit;

for the potential spatial motion vector prediction candidate, which is on the right side of the potential spatial motion vector prediction candidate above the prediction unit, excluding the potential spatial motion vector prediction candidate from the merge list if the potential spatial motion vector prediction candidate has essentially similar motion information than the spatial motion vector prediction candidate above the prediction unit;

for the potential spatial motion vector prediction candidate, which is below the potential spatial motion vector prediction candidate on the left side of the prediction unit, excluding the potential spatial motion vector prediction candidate from the merge list if the potential spatial motion vector prediction candidate has essentially similar motion information than the spatial motion vector prediction candidate on the left side of the prediction unit;

for the potential spatial motion vector prediction candidate cornerwise neighbouring the prediction unit, excluding the potential spatial motion vector prediction candidate from the merge list if any of the following conditions are fulfilled:

– all the other potential spatial motion vector prediction candidates have been included in the merge list;

– the potential spatial motion vector prediction candidate has essentially similar motion information than the spatial motion vector prediction candidate above the prediction unit;

– the potential spatial motion vector prediction candidate has essentially similar motion information than the spatial motion vector prediction candidate on the left side of the prediction unit.

**[00167]** In some embodiments the method comprises including a temporal motion prediction candidate into the merge list.



Amazon.com, Inc., Amazon.com Services LLC - Ex. 1002, Page 000069

**[00168]** In some embodiments the method comprises selecting one motion vector prediction candidate from the merge list to represent a motion vector prediction for the block of pixels.

**[00169]** In some embodiments a method according to the second aspect comprises:

receiving an encoded block of pixels including a prediction unit;

determining a set of spatial motion vector prediction candidates for the encoded block of pixels; the spatial motion vector prediction candidates being provided with motion information;

selecting a first spatial motion vector prediction candidate from the set of spatial motion vector prediction candidates as a potential spatial motion vector prediction candidate to be included in a merge list for the prediction unit;

determining a subset of spatial motion vector predictions based on the location of the block associated with the first spatial motion vector prediction candidate;

comparing motion information of the first spatial motion vector prediction candidate with motion information of another spatial motion vector prediction candidate of the set of spatial motion vector prediction candidates;

if at least one of the comparisons indicates that the motion vector information of the spatial motion vector prediction candidates correspond with each other, excluding the first spatial motion vector prediction candidate from the merge list.

**[00170]** In some embodiments the method comprises including neighbouring blocks of the received encoded block of pixels in the set of spatial motion vector prediction candidates.

**[00171]** In some embodiments the method comprises constructing the set of spatial motion vector predictions by using motion vectors of one or more decoded blocks in a same frame than the received encoded block of pixels.

**[00172]** In some embodiments the method comprises selecting spatial motion vector prediction candidates from the set of spatial motion vector prediction candidates as the potential spatial motion vector prediction candidate in a predetermined order.

**[00173]** In some embodiments the method comprises comparing motion information of the potential spatial motion vector prediction candidate with motion information of at most one other spatial motion vector prediction candidate of the set of spatial motion vector prediction candidates.



Amazon.com, Inc., Amazon.com Services LLC - Ex. 1002, Page 000070

**[00174]** In some embodiments the method comprises examining whether the received encoded block of pixels is divided into a first prediction unit and a second prediction unit; and if so, excluding the potential spatial motion vector prediction candidate from the merge list if the prediction unit is the second prediction unit.

**[00175]** In some embodiments the method comprises

determining a maximum number of spatial motion vector prediction candidates to be included in a merge list; and

limiting the number of spatial motion vector prediction candidates in the merge list smaller or equal to the maximum number.

**[00176]** In some embodiments the method comprises

examining, if the number of spatial motion vector prediction candidates in the merge list smaller than the maximum number;

if so, examining whether a prediction unit to which the potential spatial motion vector prediction candidate belongs is available for motion prediction;

if so, performing at least one of the following:

for the potential spatial motion vector prediction candidate on the left side of the prediction unit, excluding the potential spatial motion vector prediction candidate from the merge list if any of the following conditions are fulfilled:

– the received encoded block of pixels is vertically divided into a first prediction unit and a second prediction unit, and the prediction unit is the second prediction unit;

– the received encoded block of pixels is horizontally divided into a first prediction unit and a second prediction unit, and if the prediction unit is the second prediction unit, and the potential spatial motion vector prediction candidate has essentially similar motion information than the spatial motion vector prediction candidate above the prediction unit;

for the potential spatial motion vector prediction candidate above the prediction unit, excluding the potential spatial motion vector prediction candidate from the merge list if any of the following conditions are fulfilled:

– the received encoded block of pixels is horizontally divided into a first prediction unit and a second prediction unit, and the prediction unit is the second prediction unit;



Amazon.com, Inc., Amazon.com Services LLC - Ex. 1002, Page 000071

– the potential spatial motion vector prediction candidate has essentially similar motion information than the spatial motion vector prediction candidate on the left side of the prediction unit;

for the potential spatial motion vector prediction candidate, which is on the right side of the potential spatial motion vector prediction candidate above the prediction unit, excluding the potential spatial motion vector prediction candidate from the merge list if the potential spatial motion vector prediction candidate has essentially similar motion information than the spatial motion vector prediction candidate above the prediction unit;

for the potential spatial motion vector prediction candidate, which is below the potential spatial motion vector prediction candidate on the left side of the prediction unit, excluding the potential spatial motion vector prediction candidate from the merge list if the potential spatial motion vector prediction candidate has essentially similar motion information than the spatial motion vector prediction candidate on the left side of the prediction unit;

for the potential spatial motion vector prediction candidate cornerwise neighbouring the prediction unit, excluding the potential spatial motion vector prediction candidate from the merge list if any of the following conditions are fulfilled:

– all the other potential spatial motion vector prediction candidates have been included in the merge list;

– the potential spatial motion vector prediction candidate has essentially similar motion information than the spatial motion vector prediction candidate above the prediction unit;

– the potential spatial motion vector prediction candidate has essentially similar motion information than the spatial motion vector prediction candidate on the left side of the prediction unit.

**[00177]** In some embodiments the method comprises including a temporal motion prediction candidate into the merge list.

**[00178]** In some embodiments the method comprises selecting one motion vector prediction candidate from the merge list to represent a motion vector prediction for the received encoded block of pixels.

**[00179]** In some embodiments an apparatus according to the third aspect comprises a processor and a memory including computer program code, the memory and the computer program code configured to, with the processor, cause the apparatus to:



Amazon.com, Inc., Amazon.com Services LLC - Ex. 1002, Page 000072

receive a block of pixels

including a prediction unit;

determining a set of spatial motion vector prediction candidates for the block of pixels; the spatial motion vector prediction candidates being provided with motion information;

selecting a first spatial motion vector prediction candidate from the set of spatial motion vector prediction candidates as a potential spatial motion vector prediction candidate to be included in a merge list for the prediction unit;

determining a subset of spatial motion vector predictions based on the location of the block associated with the first spatial motion vector prediction candidate;

comparing motion information of the first spatial motion vector prediction candidate with motion information of the spatial motion vector prediction candidate in the determined subset of spatial motion vector prediction candidates;

if at least one the comparisons indicates that the motion vector information of the spatial motion vector prediction candidates correspond with each other, excluding the first spatial motion vector prediction candidate from the merge list.

**[00180]** In some embodiments an apparatus according to the fourth aspect comprises a processor and a memory including computer program code, the memory and the computer program code configured to, with the processor, cause the apparatus to:

receive an encoded block of pixels including a prediction unit;

determine a set of spatial motion vector prediction candidates for the encoded block of pixels; the spatial motion vector prediction candidates being provided with motion information;

select a first spatial motion vector prediction candidate from the set of spatial motion vector prediction candidates as a potential spatial motion vector prediction candidate to be included in a merge list for the prediction unit;

determine a subset of spatial motion vector predictions based on the location of the block associated with the first spatial motion vector prediction candidate;

compare motion information of the first spatial motion vector prediction candidate with motion information of the spatial motion vector prediction candidate in the determined subset of spatial motion vector prediction candidates;



Amazon.com, Inc., Amazon.com Services LLC - Ex. 1002, Page 000073

exclude the first spatial motion vector prediction candidate from the merge list, if at least one of the comparisons indicates that the motion vector information of the spatial motion vector prediction candidates correspond with each other

**[00181]** In some embodiments a storage medium having stored thereon a computer program code a computer executable program code for use by an encoder, said program codes comprise instructions for use by an encoder, said program code comprises instructions for:

receiving a block of pixels including a prediction unit;

determining a set of spatial motion vector prediction candidates for the block of pixels; the spatial motion vector prediction candidates being provided with motion information;

selecting a first spatial motion vector prediction candidate from the set of spatial motion vector prediction candidates as a potential spatial motion vector prediction candidate to be included in a merge list for the prediction unit;

determining a subset of spatial motion vector predictions based on the location of the block associated with the first spatial motion vector prediction candidate;

comparing motion information of the first spatial motion vector prediction candidate with motion information of the spatial motion vector prediction candidate in the determined subset of spatial motion vector prediction candidates;

if at least one of the comparisons indicates that the motion vector information of the spatial motion vector prediction candidates correspond with each other, excluding the first spatial motion vector prediction candidate from the merge list.

**[00182]** In some embodiments a storage medium having stored thereon a computer program code a computer executable program code for use by an encoder, said program codes comprise instructions for use by an encoder, said program code comprises instructions for:

receiving an encoded block of pixels including a prediction unit;

determining a set of spatial motion vector prediction candidates for the encoded block of pixels; the spatial motion vector prediction candidates being provided with motion information;

selecting a first spatial motion vector prediction candidate from the set of spatial motion vector prediction candidates as a potential spatial motion vector prediction candidate to be included in a merge list for the prediction unit;



Amazon.com, Inc., Amazon.com Services LLC - Ex. 1002, Page 000074

determining a subset of spatial motion vector predictions based on the location of the block associated with the first spatial motion vector prediction candidate;

comparing motion information of the first spatial motion vector prediction candidate with motion information of the spatial motion vector prediction candidate in the determined subset of spatial motion vector prediction candidates;

if at least one of the comparisons indicates that the motion vector information of the spatial motion vector prediction candidates correspond with each other, excluding the first spatial motion vector prediction candidate from the merge list.

**[00183]** In some embodiments an apparatus comprises:

means for receiving a block of pixels including a prediction unit;

means for selecting a first spatial motion vector prediction candidate from the set of spatial motion vector prediction candidates as a potential spatial motion vector prediction candidate to be included in a merge list for the prediction unit;

means for determining a subset of spatial motion vector predictions based on the location of the block associated with the first spatial motion vector prediction candidate;

means for comparing motion information of the first spatial motion vector prediction candidate with motion information of the spatial motion vector prediction candidate in the determined subset of spatial motion vector prediction candidates;

means for excluding the first spatial motion vector prediction candidate from the merge list, if at least one of the comparisons indicates that the motion vector information of the spatial motion vector prediction candidates correspond with each other.

**[00184]** In some embodiments an apparatus comprises:

means for receiving an encoded block of pixels including a prediction unit;

means for determining a set of spatial motion vector prediction candidates for the encoded block of pixels; the spatial motion vector prediction candidates being provided with motion information;

means for selecting a first spatial motion vector prediction candidate from the set of spatial motion vector prediction candidates as a potential spatial motion vector prediction candidate to be included in a merge list for the prediction unit;

means for determining a subset of spatial motion vector predictions based on the 58location of the block associated with the first spatial motion vector prediction candidate;



Amazon.com, Inc., Amazon.com Services LLC - Ex. 1002, Page 000075

means for comparing motion information of the first spatial motion vector prediction candidate with motion information of the spatial motion vector prediction candidate in the determined subset of spatial motion vector prediction candidates;

means for excluding the first spatial motion vector prediction candidate from the merge list, if at least one of the comparisons indicates that the motion vector information of the spatial motion vector prediction candidates correspond with each other.



Amazon.com, Inc., Amazon.com Services LLC - Ex. 1002, Page 000076

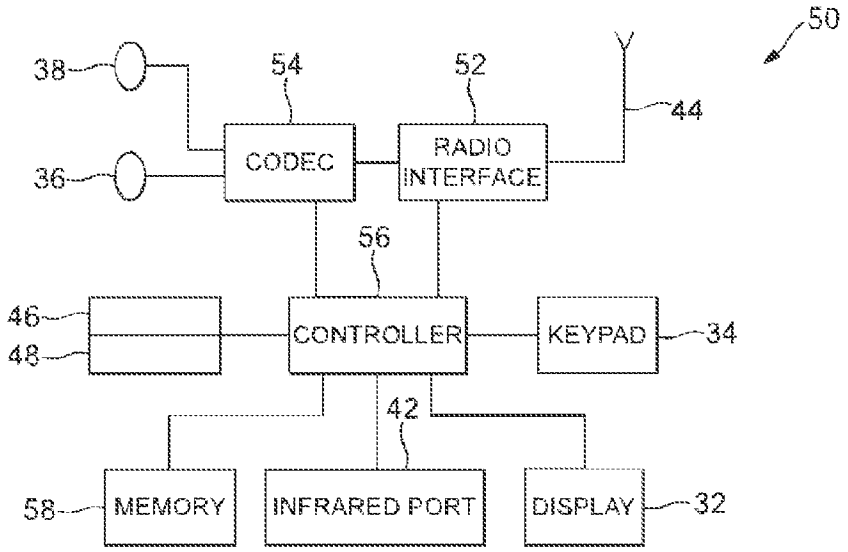
50
38
54
52
44
36
CODEC
RADIO INTERFACE
56
46
48
CONTROLLER
KEYPAD
34
42
58
MEMORY
INFRARED PORT
DISPLAY
32

FIG.1

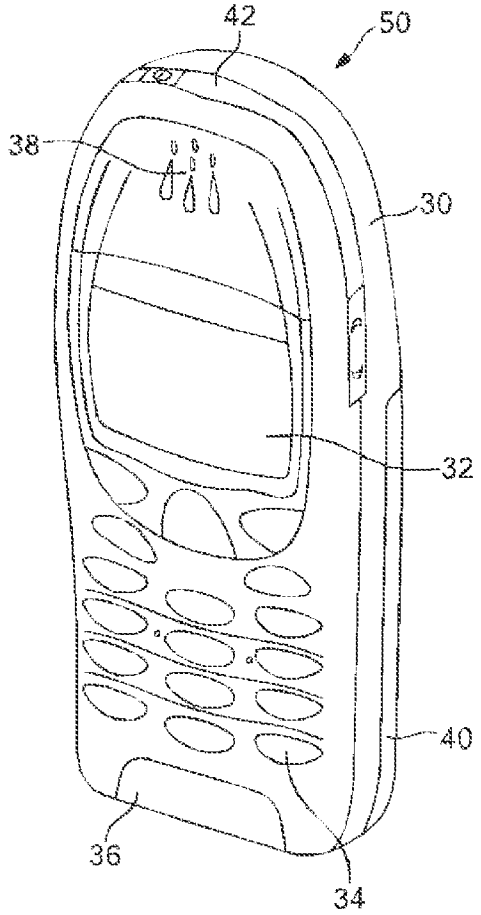
42
50
38
30
32
40
36
34

FIG. 2

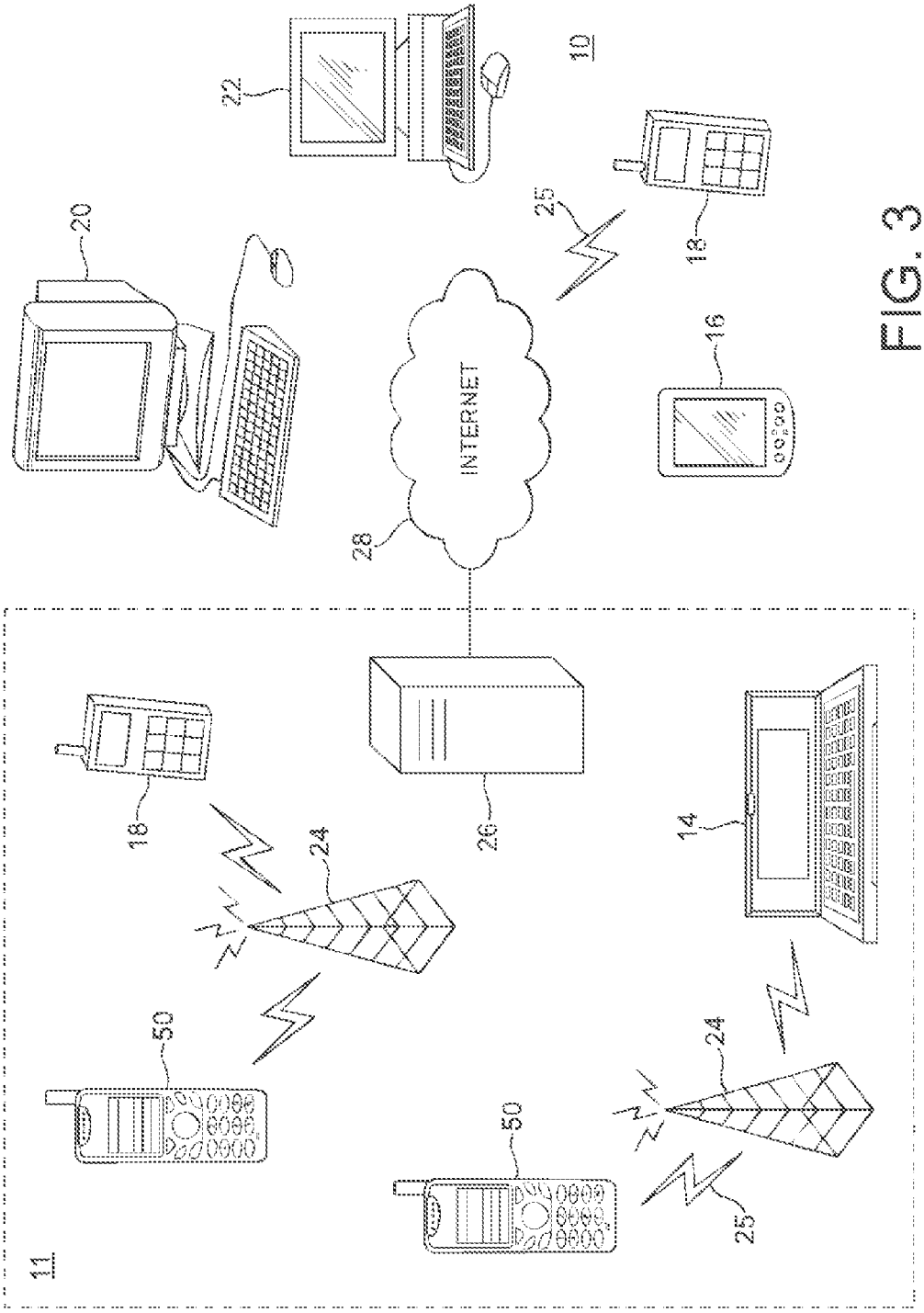


FIG. 3

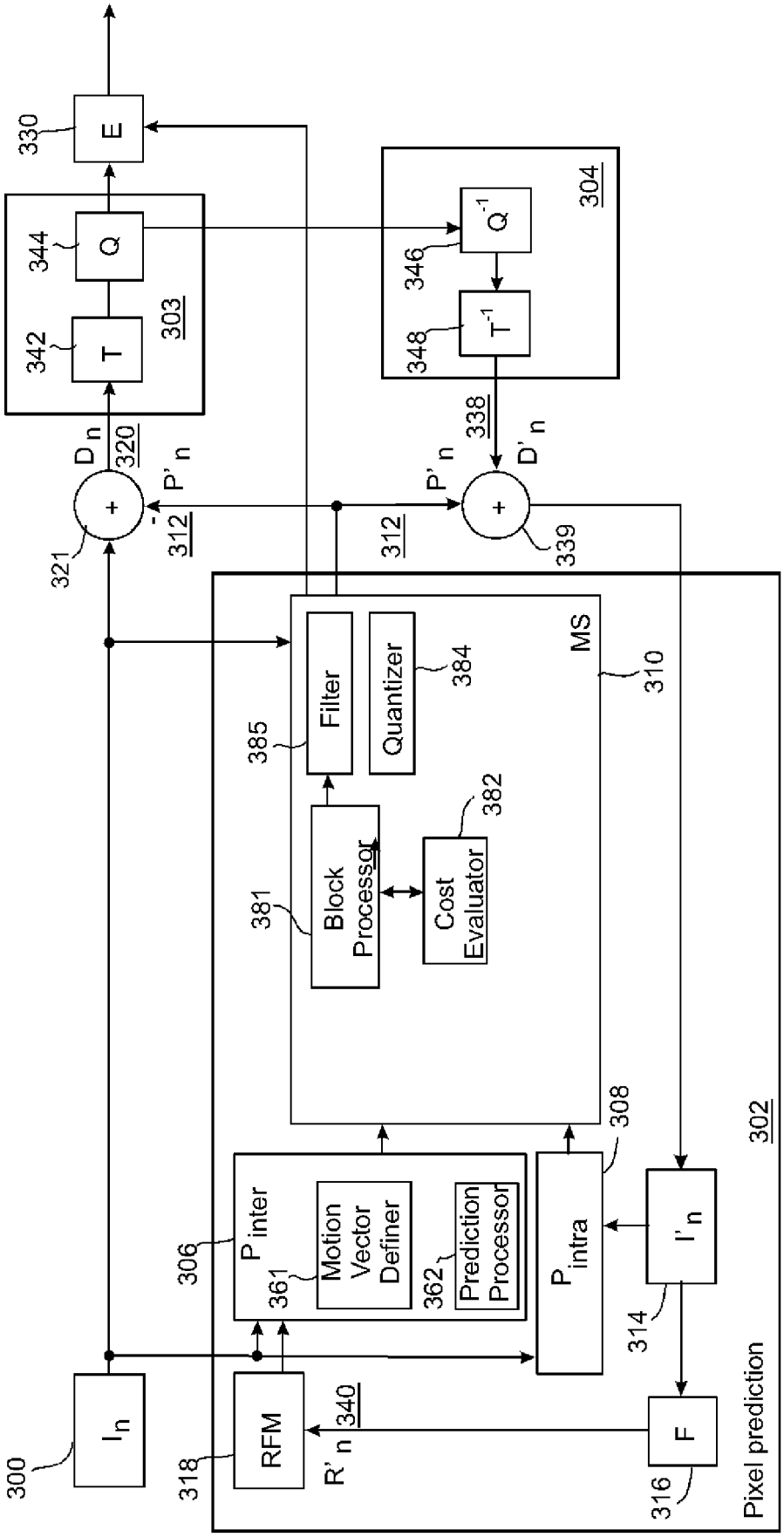
300
$I_n$
318
RFM
$R'_n$ 340
$P_{inter}$
306
361
Motion Vector Definer
362
Prediction Processor
$P_{intra}$
308
$I'_n$
314
F
316
Pixel prediction
302
Filter
385
Quantizer
384
MS
310
Block Processor
381
Cost Evaluator
382
321
$D_n$
320
$P'_n$
312
342
T
344
Q
303
330
E
$P'_n$
312
338
$D'_n$
339
348
$T^{-1}$
346
$Q^{-1}$
304

Fig. 4a

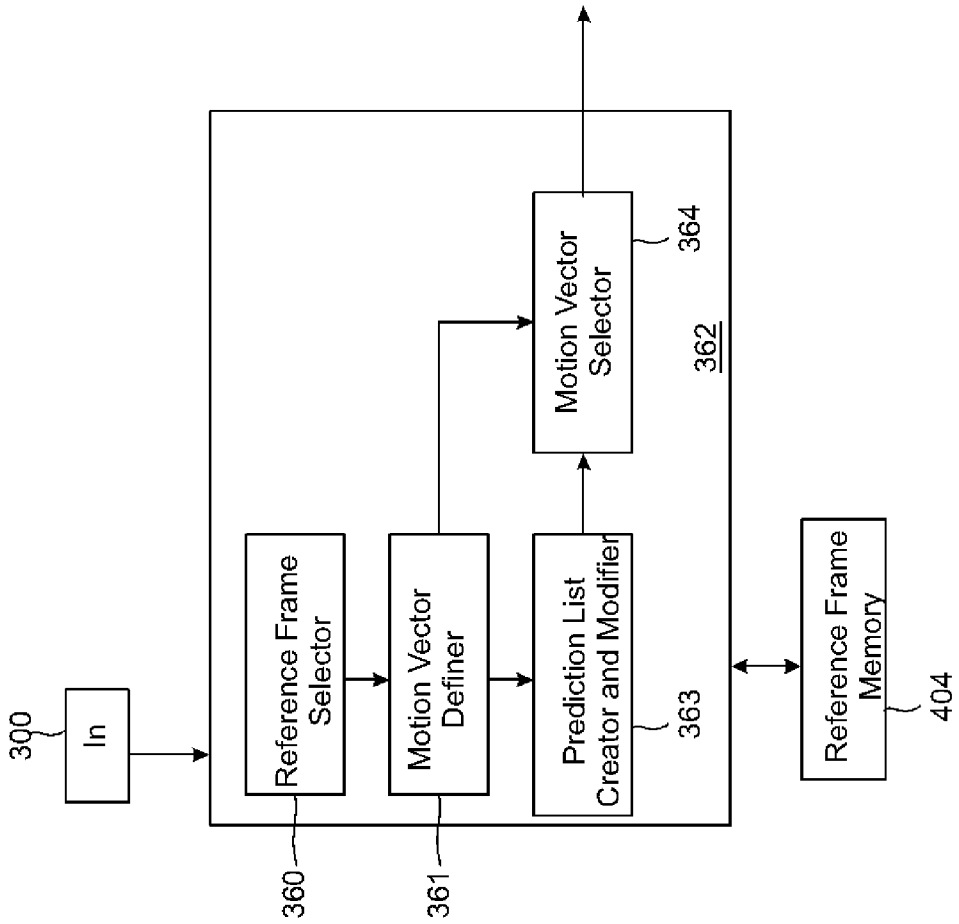
300
In
360
Reference Frame Selector
361
Motion Vector Definer
363
Prediction List Creator and Modifier
364
Motion Vector Selector
362
Reference Frame Memory
404

Fig. 4b

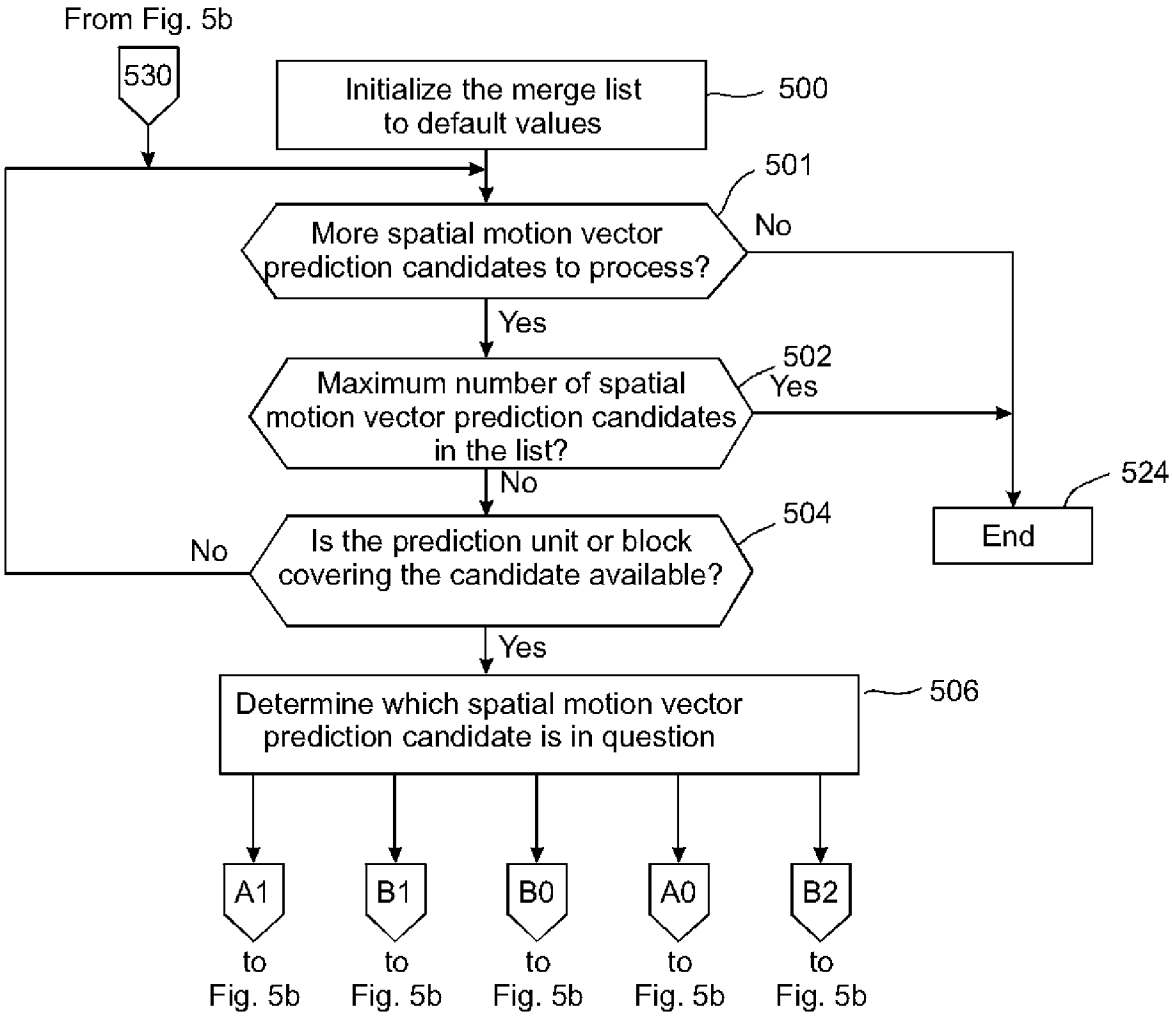
From Fig. 5b
530
Initialize the merge list to default values
500
501
More spatial motion vector prediction candidates to process?
No
Yes
502
Maximum number of spatial motion vector prediction candidates in the list?
Yes
No
524
End
504
Is the prediction unit or block covering the candidate available?
No
Yes
506
Determine which spatial motion vector prediction candidate is in question
A1
B1
B0
A0
B2
to Fig. 5b
to Fig. 5b
to Fig. 5b
to Fig. 5b
to Fig. 5b

Fig. 5a

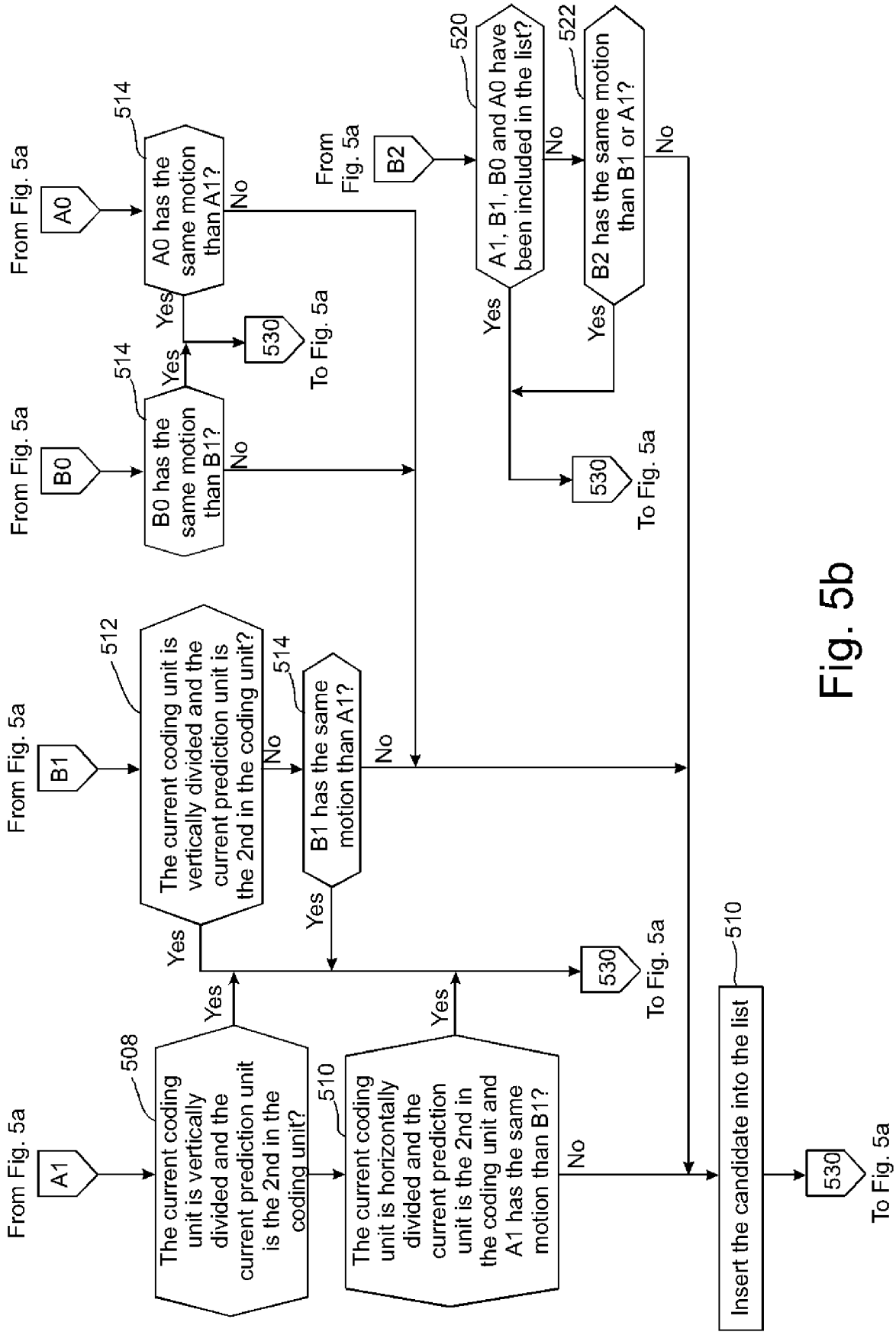
From Fig. 5a
A1
508
The current coding unit is vertically divided and the current prediction unit is the 2nd in the coding unit?
Yes
510
The current coding unit is horizontally divided and the current prediction unit is the 2nd in the coding unit and A1 has the same motion than B1?
Yes
No
From Fig. 5a
B1
512
The current coding unit is vertically divided and the current prediction unit is the 2nd in the coding unit?
Yes
No
514
B1 has the same motion than A1?
Yes
No
530
To Fig. 5a
From Fig. 5a
B0
514
B0 has the same motion than B1?
Yes
No
From Fig. 5a
A0
514
A0 has the same motion than A1?
Yes
No
530
To Fig. 5a
From Fig. 5a
B2
520
A1, B1, B0 and A0 have been included in the list?
Yes
No
522
B2 has the same motion than B1 or A1?
Yes
No
530
To Fig. 5a
510
Insert the candidate into the list
530
To Fig. 5a

Fig. 5b

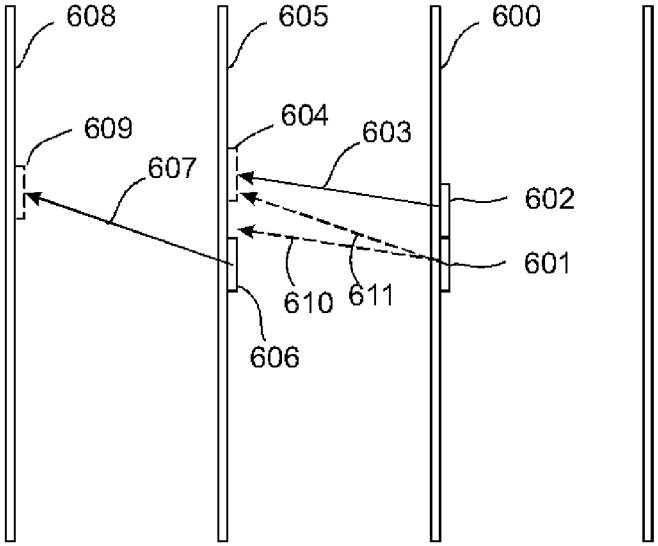
608
605
600
609
604
603
607
602
601
610
611
606

Fig. 6a

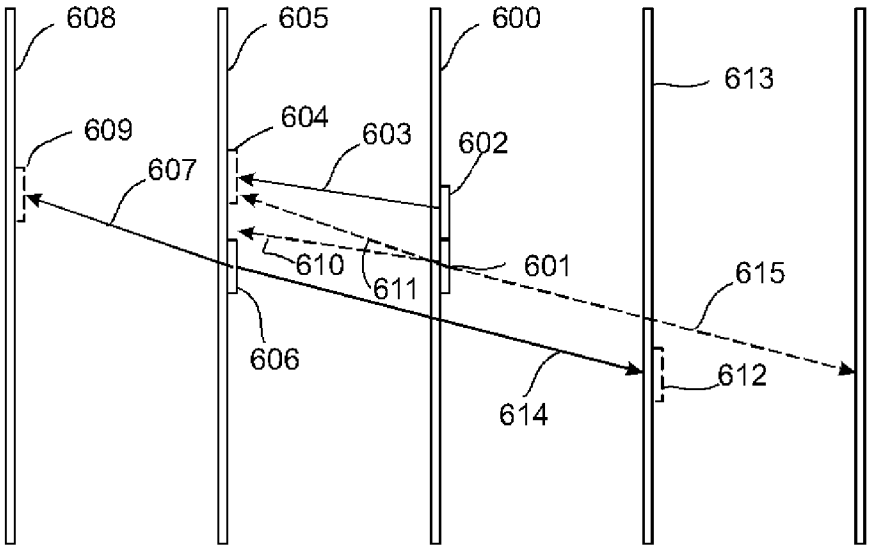
608
605
600
613
609
604
603
602
607
610
601
611
615
606
612
614

Fig. 6b

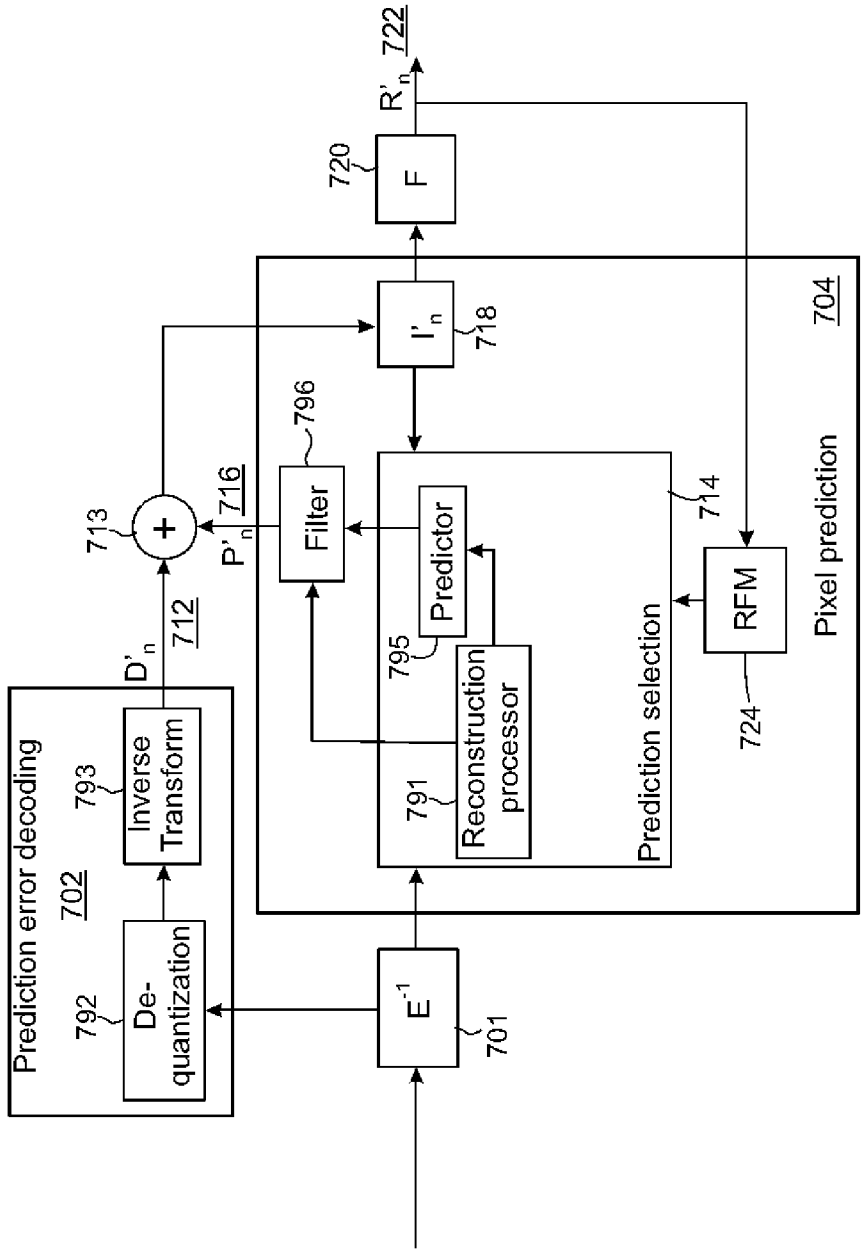
Prediction error decoding
702
792
De-quantization
793
Inverse Transform
D'n
712
713
+
P'n
716
Filter
796
E-1
701
I'n
718
F
720
R'n
722
Predictor
795
Reconstruction processor
791
Prediction selection
714
RFM
724
Pixel prediction
704

Fig. 7

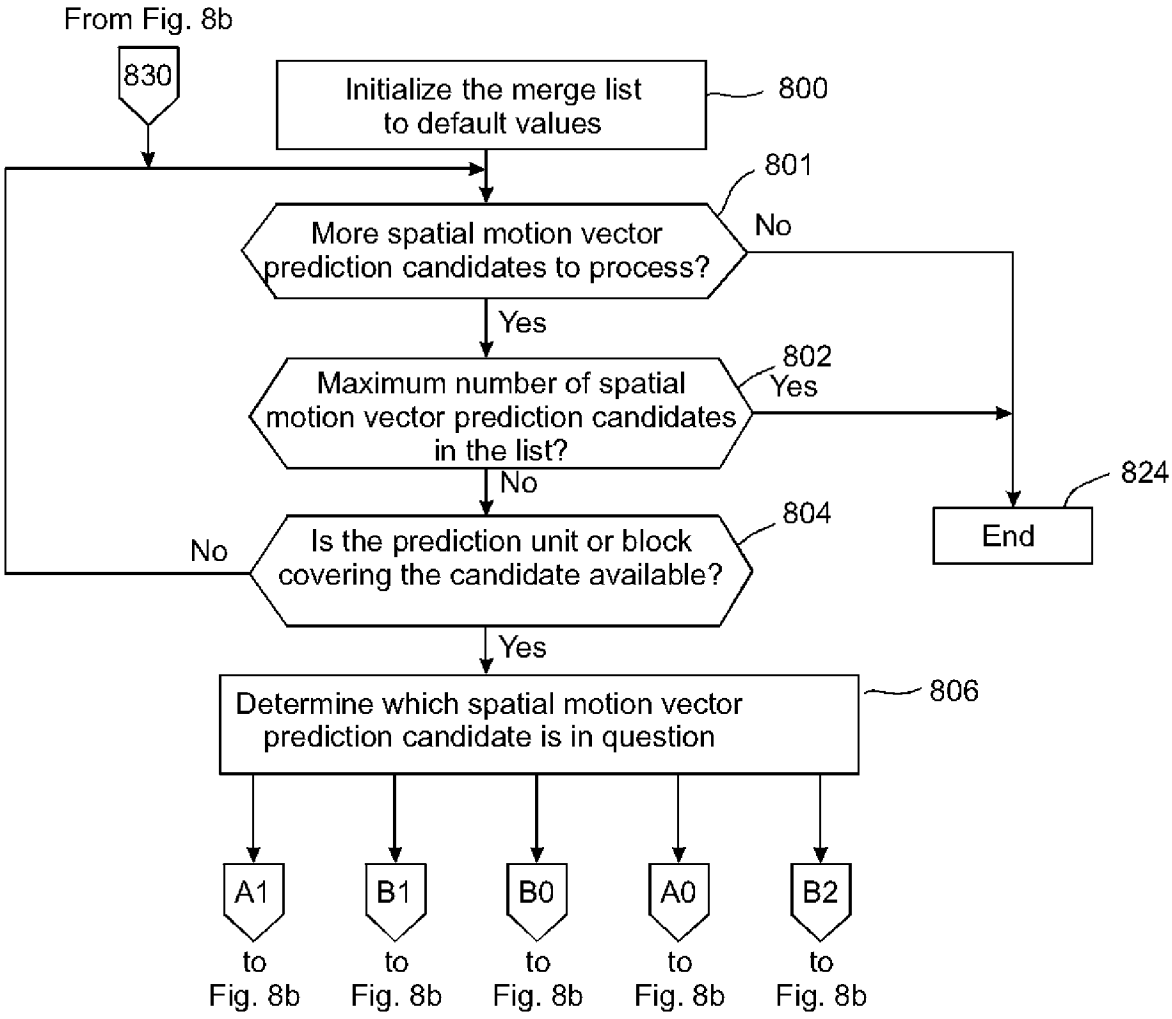
From Fig. 8b
830
Initialize the merge list to default values
800
801
More spatial motion vector prediction candidates to process?
No
Yes
802
Maximum number of spatial motion vector prediction candidates in the list?
Yes
No
824
End
804
Is the prediction unit or block covering the candidate available?
No
Yes
806
Determine which spatial motion vector prediction candidate is in question
A1
B1
B0
A0
B2
to Fig. 8b
to Fig. 8b
to Fig. 8b
to Fig. 8b
to Fig. 8b

Fig. 8a

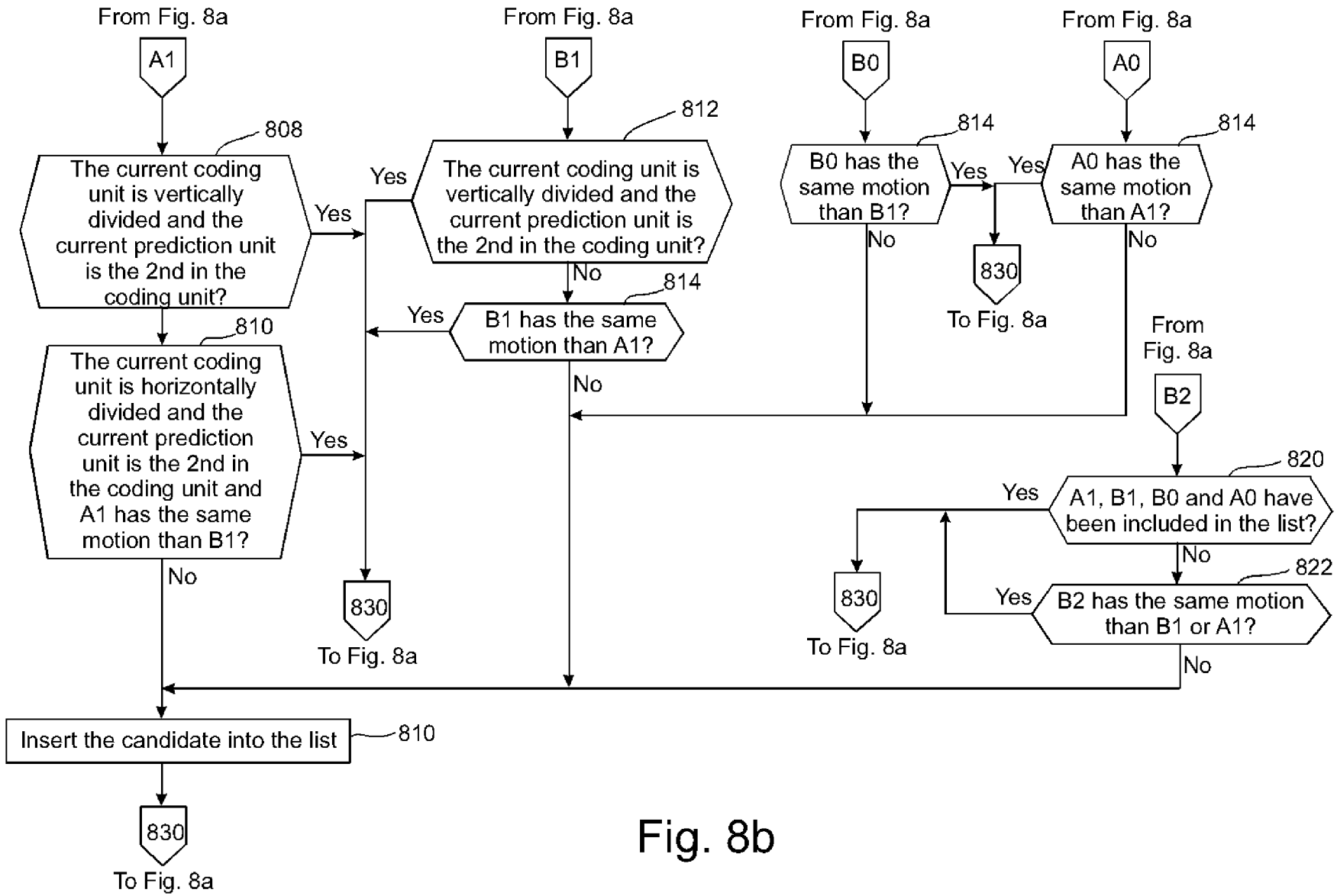


Fig. 8b

Amazon.com, Inc., Amazon.com Services LLC - Ex. 1002, Page 000086

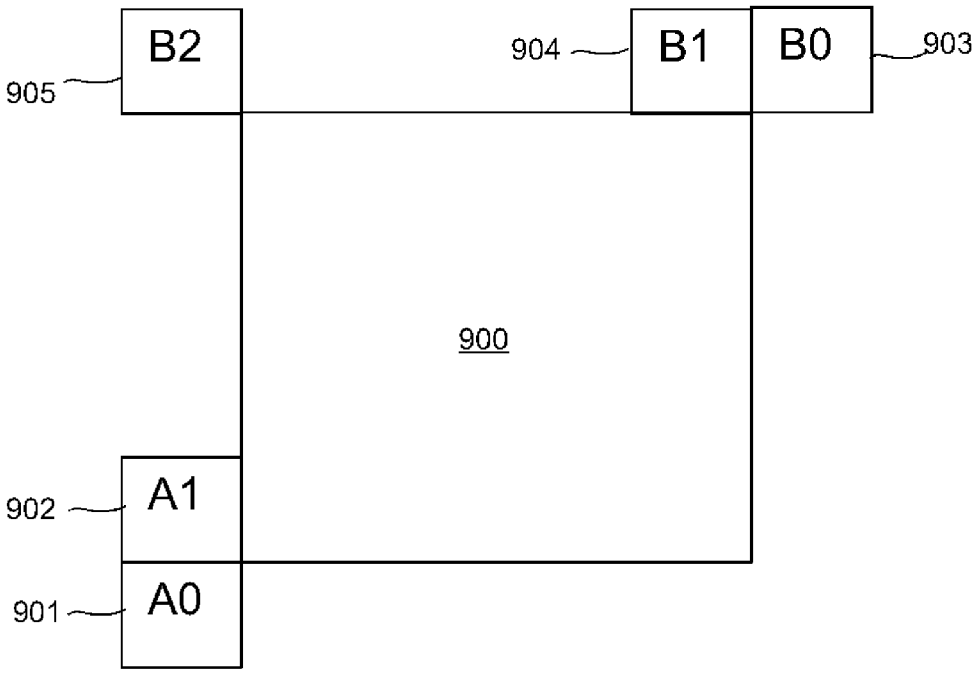


Fig. 9

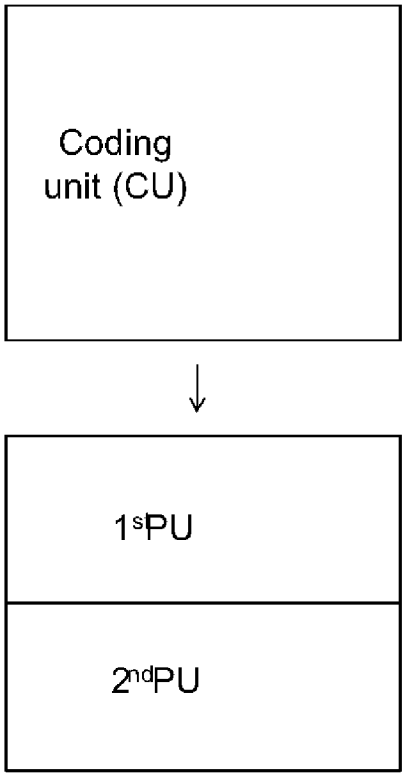


Fig. 10a

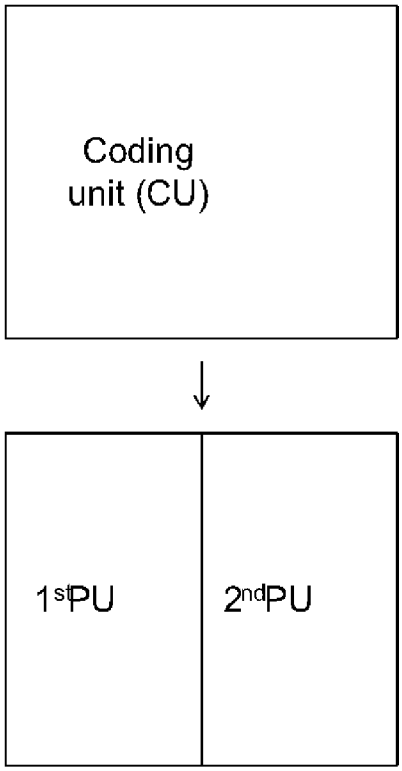


Fig. 10b

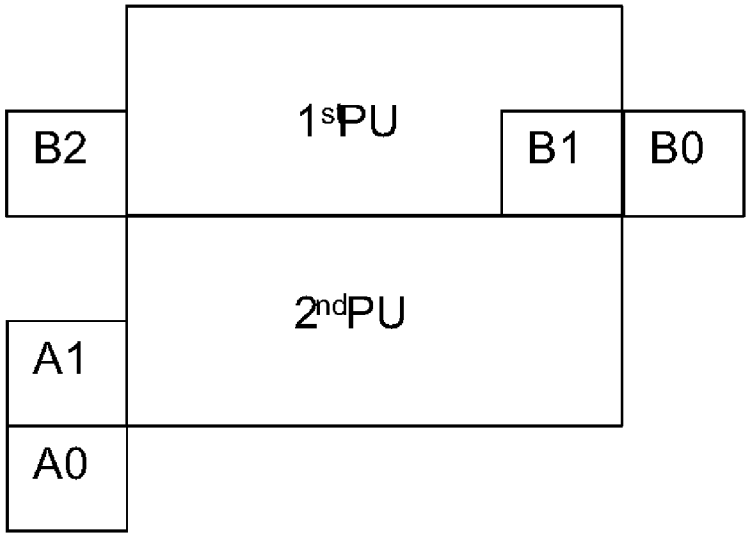


Fig. 11a

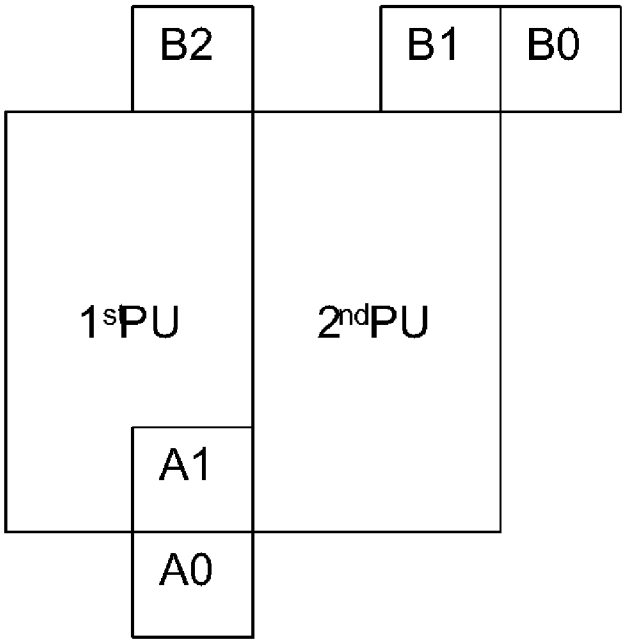


Fig. 11b

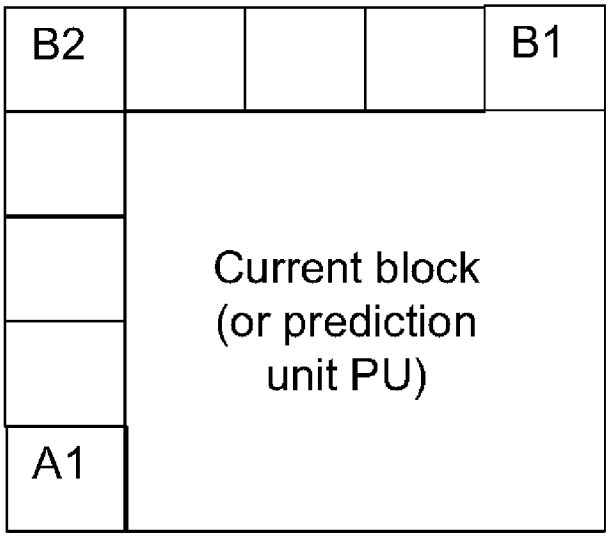


Fig. 12

PTO/AIA/01 (06-12)
Approved for use through 01/31/2014. OMB 0651-0032
U.S. Patent and Trademark Office; U.S. DEPARTMENT OF COMMERCE
Under the Paperwork Reduction Act of 1995, no persons are required to respond to a collection of information unless it displays a valid OMB control number.

# DECLARATION (37 CFR 1.63) FOR UTILITY OR DESIGN APPLICATION USING AN APPLICATION DATA SHEET (37 CFR 1.76)

| | |
|---|---|
| **Title of Invention** | METHOD FOR CODING AND AN APPARATUS |

As the below named inventor, I hereby declare that:

This declaration is directed to:

☐ The attached application, or

☒ United States application or PCT international application number 13/666680

filed on November 1, 2012.

The above-identified application was made or authorized to be made by me.

I believe that I am the original inventor or an original joint inventor of a claimed invention in the application.

I hereby acknowledge that any willful false statement made in this declaration is punishable under 18 U.S.C. 1001 by fine or imprisonment of not more than five (5) years, or both.

## WARNING:

Petitioner/applicant is cautioned to avoid submitting personal information in documents filed in a patent application that may contribute to identity theft. Personal information such as social security numbers, bank account numbers, or credit card numbers (other than a check or credit card authorization form PTO-2038 submitted for payment purposes) is never required by the USPTO to support a petition or an application. If this type of personal information is included in documents submitted to the USPTO, petitioners/applicants should consider redacting such personal information from the documents before submitting them to the USPTO. Petitioner/applicant is advised that the record of a patent application is available to the public after publication of the application (unless a non-publication request in compliance with 37 CFR 1.213(a) is made in the application) or issuance of a patent. Furthermore, the record from an abandoned application may also be available to the public if the application is referenced in a published application or an issued patent (see 37 CFR 1.14). Checks and credit card authorization forms PTO-2038 submitted for payment purposes are not retained in the application file and therefore are not publicly available.

LEGAL NAME OF INVENTOR

Inventor: Mehmet Oguz BICI Date (Optional): NOV - 05 - 2012

Signature: MOBici

Note: An application data sheet (PTO/SB/14 or equivalent), including naming the entire inventive entity, must accompany this form. Use an additional PTO/AIA/01 form for each additional inventor.

This collection of information is required by 35 U.S.C. 115 and 37 CFR 1.63. The information is required to obtain or retain a benefit by the public which is to file (and by the USPTO to process) an application. Confidentiality is governed by 35 U.S.C. 122 and 37 CFR 1.11 and 1.14. This collection is estimated to take 1 minute to complete, including gathering, preparing, and submitting the completed application form to the USPTO. Time will vary depending upon the individual case. Any comments on the amount of time you require to complete this form and/or suggestions for reducing this burden, should be sent to the Chief Information Officer, U.S. Patent and Trademark Office, U.S. Department of Commerce, P.O. Box 1450, Alexandria, VA 22313-1450. DO NOT SEND FEES OR COMPLETED FORMS TO THIS ADDRESS. **SEND TO: Commissioner for Patents, P.O. Box 1450, Alexandria, VA 22313-1450.**

*If you need assistance in completing the form, call 1-800-PTO-9199 and select option 2.*

PTO/AIA/01 (06-12)
Approved for use through 01/31/2014. OMB 0651-0032
U.S. Patent and Trademark Office; U.S. DEPARTMENT OF COMMERCE
Under the Paperwork Reduction Act of 1995, no persons are required to respond to a collection of information unless it displays a valid OMB control number.

# DECLARATION (37 CFR 1.63) FOR UTILITY OR DESIGN APPLICATION USING AN APPLICATION DATA SHEET (37 CFR 1.76)

| | |
|---|---|
| **Title of Invention** | METHOD FOR CODING AND AN APPARATUS |

As the below named inventor, I hereby declare that:

This declaration is directed to:

☐ The attached application, or

☒ United States application or PCT international application number 13/666680

filed on November 1, 2012.

The above-identified application was made or authorized to be made by me.

I believe that I am the original inventor or an original joint inventor of a claimed invention in the application.

I hereby acknowledge that any willful false statement made in this declaration is punishable under 18 U.S.C. 1001 by fine or imprisonment of not more than five (5) years, or both.

## WARNING:

Petitioner/applicant is cautioned to avoid submitting personal information in documents filed in a patent application that may contribute to identity theft. Personal information such as social security numbers, bank account numbers, or credit card numbers (other than a check or credit card authorization form PTO-2038 submitted for payment purposes) is never required by the USPTO to support a petition or an application. If this type of personal information is included in documents submitted to the USPTO, petitioners/applicants should consider redacting such personal information from the documents before submitting them to the USPTO. Petitioner/applicant is advised that the record of a patent application is available to the public after publication of the application (unless a non-publication request in compliance with 37 CFR 1.213(a) is made in the application) or issuance of a patent. Furthermore, the record from an abandoned application may also be available to the public if the application is referenced in a published application or an issued patent (see 37 CFR 1.14). Checks and credit card authorization forms PTO-2038 submitted for payment purposes are not retained in the application file and therefore are not publicly available.

LEGAL NAME OF INVENTOR

Inventor: Jani LAINEMA Date (Optional): NOV-02-2012

Signature:

Note: An application data sheet (PTO/SB/14 or equivalent), including naming the entire inventive entity, must accompany this form. Use an additional PTO/AIA/01 form for each additional inventor.

This collection of information is required by 35 U.S.C. 115 and 37 CFR 1.63. The information is required to obtain or retain a benefit by the public which is to file (and by the USPTO to process) an application. Confidentiality is governed by 35 U.S.C. 122 and 37 CFR 1.11 and 1.14. This collection is estimated to take 1 minute to complete, including gathering, preparing, and submitting the completed application form to the USPTO. Time will vary depending upon the individual case. Any comments on the amount of time you require to complete this form and/or suggestions for reducing this burden, should be sent to the Chief Information Officer, U.S. Patent and Trademark Office, U.S. Department of Commerce, P.O. Box 1450, Alexandria, VA 22313-1450. DO NOT SEND FEES OR COMPLETED FORMS TO THIS ADDRESS. **SEND TO: Commissioner for Patents, P.O. Box 1450, Alexandria, VA 22313-1450.**

*If you need assistance in completing the form, call 1-800-PTO-9199 and select option 2.*

PTO/AIA/01 (06-12)
Approved for use through 01/31/2014. OMB 0651-0032
U.S. Patent and Trademark Office; U.S. DEPARTMENT OF COMMERCE
Under the Paperwork Reduction Act of 1995, no persons are required to respond to a collection of information unless it displays a valid OMB control number.

# DECLARATION (37 CFR 1.63) FOR UTILITY OR DESIGN APPLICATION USING AN APPLICATION DATA SHEET (37 CFR 1.76)

**Title of Invention** METHOD FOR CODING AND AN APPARATUS

As the below named inventor, I hereby declare that:

This declaration is directed to:

☐ The attached application, or

☒ United States application or PCT international application number 13/666680

filed on November 1, 2012.

The above-identified application was made or authorized to be made by me.

I believe that I am the original inventor or an original joint inventor of a claimed invention in the application.

I hereby acknowledge that any willful false statement made in this declaration is punishable under 18 U.S.C. 1001 by fine or imprisonment of not more than five (5) years, or both.

## WARNING:

Petitioner/applicant is cautioned to avoid submitting personal information in documents filed in a patent application that may contribute to identity theft. Personal information such as social security numbers, bank account numbers, or credit card numbers (other than a check or credit card authorization form PTO-2038 submitted for payment purposes) is never required by the USPTO to support a petition or an application. If this type of personal information is included in documents submitted to the USPTO, petitioners/applicants should consider redacting such personal information from the documents before submitting them to the USPTO. Petitioner/applicant is advised that the record of a patent application is available to the public after publication of the application (unless a non-publication request in compliance with 37 CFR 1.213(a) is made in the application) or issuance of a patent. Furthermore, the record from an abandoned application may also be available to the public if the application is referenced in a published application or an issued patent (see 37 CFR 1.14). Checks and credit card authorization forms PTO-2038 submitted for payment purposes are not retained in the application file and therefore are not publicly available.

LEGAL NAME OF INVENTOR

Inventor: Kemal UGUR Date (Optional): Nov-02-2012

Signature:

Note: An application data sheet (PTO/SB/14 or equivalent), including naming the entire inventive entity, must accompany this form. Use an additional PTO/AIA/01 form for each additional inventor.

This collection of information is required by 35 U.S.C. 115 and 37 CFR 1.63. The information is required to obtain or retain a benefit by the public which is to file (and by the USPTO to process) an application. Confidentiality is governed by 35 U.S.C. 122 and 37 CFR 1.11 and 1.14. This collection is estimated to take 1 minute to complete, including gathering, preparing, and submitting the completed application form to the USPTO. Time will vary depending upon the individual case. Any comments on the amount of time you require to complete this form and/or suggestions for reducing this burden, should be sent to the Chief Information Officer, U.S. Patent and Trademark Office, U.S. Department of Commerce, P.O. Box 1450, Alexandria, VA 22313-1450. DO NOT SEND FEES OR COMPLETED FORMS TO THIS ADDRESS. **SEND TO: Commissioner for Patents, P.O. Box 1450, Alexandria, VA 22313-1450.**

*If you need assistance in completing the form, call 1-800-PTO-9199 and select option 2.*

# PATENT APPLICATION FEE DETERMINATION RECORD

Substitute for Form PTO-875

Application or Docket Number
16/356,733

## APPLICATION AS FILED - PART I

| FOR | (Column 1) NUMBER FILED | (Column 2) NUMBER EXTRA | SMALL ENTITY RATE($) | SMALL ENTITY FEE($) | OR | OTHER THAN SMALL ENTITY RATE($) | OTHER THAN SMALL ENTITY FEE($) |
|---|---|---|---|---|---|---|---|
| BASIC FEE (37 CFR 1.16(a), (b), or (c)) | N/A | N/A | N/A | | | N/A | 300 |
| SEARCH FEE (37 CFR 1.16(k), (i), or (m)) | N/A | N/A | N/A | | | N/A | 660 |
| EXAMINATION FEE (37 CFR 1.16(o), (p), or (q)) | N/A | N/A | N/A | | | N/A | 760 |
| TOTAL CLAIMS (37 CFR 1.16(i)) | 30 minus 20 = | * 10 | | | OR | x 100 = | 1000 |
| INDEPENDENT CLAIMS (37 CFR 1.16(h)) | 6 minus 3 = | * 3 | | | | x 460 = | 1380 |
| APPLICATION SIZE FEE (37 CFR 1.16(s)) | If the specification and drawings exceed 100 sheets of paper, the application size fee due is $310 ($155 for small entity) for each additional 50 sheets or fraction thereof. See 35 U.S.C. 41(a)(1)(G) and 37 CFR 1.16(s). | | | | | | 0.00 |
| MULTIPLE DEPENDENT CLAIM PRESENT (37 CFR 1.16(j)) | | | | | | | 0.00 |
| * If the difference in column 1 is less than zero, enter "0" in column 2. | | | TOTAL | | | TOTAL | 4100 |

## APPLICATION AS AMENDED - PART II

| | | (Column 1) CLAIMS REMAINING AFTER AMENDMENT | | (Column 2) HIGHEST NUMBER PREVIOUSLY PAID FOR | (Column 3) PRESENT EXTRA | SMALL ENTITY RATE($) | SMALL ENTITY ADDITIONAL FEE($) | OR | OTHER THAN SMALL ENTITY RATE($) | OTHER THAN SMALL ENTITY ADDITIONAL FEE($) |
|---|---|---|---|---|---|---|---|---|---|---|
| AMENDMENT A | Total (37 CFR 1.16(i)) | * | Minus | ** | = | x = | | OR | x = | |
| AMENDMENT A | Independent (37 CFR 1.16(h)) | * | Minus | *** | = | x = | | OR | x = | |
| AMENDMENT A | Application Size Fee (37 CFR 1.16(s)) | | | | | | | | | |
| AMENDMENT A | FIRST PRESENTATION OF MULTIPLE DEPENDENT CLAIM (37 CFR 1.16(j)) | | | | | | | OR | | |
| | | | | | | TOTAL ADD'L FEE | | OR | TOTAL ADD'L FEE | |

| | | (Column 1) CLAIMS REMAINING AFTER AMENDMENT | | (Column 2) HIGHEST NUMBER PREVIOUSLY PAID FOR | (Column 3) PRESENT EXTRA | SMALL ENTITY RATE($) | SMALL ENTITY ADDITIONAL FEE($) | OR | OTHER THAN SMALL ENTITY RATE($) | OTHER THAN SMALL ENTITY ADDITIONAL FEE($) |
|---|---|---|---|---|---|---|---|---|---|---|
| AMENDMENT B | Total (37 CFR 1.16(i)) | * | Minus | ** | = | x = | | OR | x = | |
| AMENDMENT B | Independent (37 CFR 1.16(h)) | * | Minus | *** | = | x = | | OR | x = | |
| AMENDMENT B | Application Size Fee (37 CFR 1.16(s)) | | | | | | | | | |
| AMENDMENT B | FIRST PRESENTATION OF MULTIPLE DEPENDENT CLAIM (37 CFR 1.16(j)) | | | | | | | OR | | |
| | | | | | | TOTAL ADD'L FEE | | OR | TOTAL ADD'L FEE | |

* If the entry in column 1 is less than the entry in column 2, write "0" in column 3.
** If the "Highest Number Previously Paid For" IN THIS SPACE is less than 20, enter "20".
*** If the "Highest Number Previously Paid For" IN THIS SPACE is less than 3, enter "3".
The "Highest Number Previously Paid For" (Total or Independent) is the highest found in the appropriate box in column 1.

UNITED STATES PATENT AND TRADEMARK OFFICE

UNITED STATES DEPARTMENT OF COMMERCE
United States Patent and Trademark Office
Address: COMMISSIONER FOR PATENTS
P.O. Box 1450
Alexandria, Virginia 22313-1450
www.uspto.gov

| APPLICATION NUMBER | FILING or 371(c) DATE | GRP ART UNIT | FIL FEE REC'D | ATTY.DOCKET.NO | TOT CLAIMS | IND CLAIMS |
|---|---|---|---|---|---|---|
| 16/356,733 | 03/18/2019 | 2482 | 4100 | 042933/519745 | 30 | 6 |

**CONFIRMATION NO. 3483**

**FILING RECEIPT**

OC000000107107064

10949
Nokia Corporation and Alston & Bird LLP
c/o Alston & Bird LLP
Bank of America Plaza, 101 South Tryon Street
Suite 4000
Charlotte, NC 28280-4000

Date Mailed: 04/04/2019

Receipt is acknowledged of this non-provisional patent application. The application will be taken up for examination in due course. Applicant will be notified as to the results of the examination. Any correspondence concerning the application must include the following identification information: the U.S. APPLICATION NUMBER, FILING DATE, NAME OF APPLICANT, and TITLE OF INVENTION. Fees transmitted by check or draft are subject to collection. Please verify the accuracy of the data presented on this receipt. **If an error is noted on this Filing Receipt, please submit a written request for a Filing Receipt Correction. Please provide a copy of this Filing Receipt with the changes noted thereon. If you received a "Notice to File Missing Parts" for this application, please submit any corrections to this Filing Receipt with your reply to the Notice. When the USPTO processes the reply to the Notice, the USPTO will generate another Filing Receipt incorporating the requested corrections**

**Inventor(s)**

Mehmet Oguz BICI, Tampere, FINLAND;
Jani LAINEMA, Tampere, FINLAND;
Kemal UGUR, Tampere, FINLAND;

**Applicant(s)**

NOKIA TECHNOLOGIES OY, Espoo, FINLAND;

**Assignment For Published Patent Application**

NOKIA TECHNOLOGIES OY, Espoo, FINLAND

**Power of Attorney:** The patent practitioners associated with Customer Number 10949

**Domestic Priority data as claimed by applicant**

This application is a CON of 15/681,725 08/21/2017 PAT 10237574
which is a CON of 15/426,822 02/07/2017 PAT 9743105
which is a CON of 13/666,680 11/01/2012 PAT 9571833
which claims benefit of 61/555,703 11/04/2011

**Foreign Applications** for which priority is claimed (You may be eligible to benefit from the **Patent Prosecution Highway** program at the USPTO. Please see http://www.uspto.gov for more information.) - None.
*Foreign application information must be provided in an Application Data Sheet in order to constitute a claim to foreign priority. See 37 CFR 1.55 and 1.76.*

**Permission to Access Application via Priority Document Exchange:** Yes

**Permission to Access Search Results:** Yes



Amazon.com, Inc., Amazon.com Services LLC - Ex. 1002, Page 000094

Applicant may provide or rescind an authorization for access using Form PTO/SB/39 or Form PTO/SB/69 as appropriate.

**If Required, Foreign Filing License Granted:** 04/03/2019

The country code and number of your priority application, to be used for filing abroad under the Paris Convention, is **US 16/356,733**

**Projected Publication Date:** 07/11/2019

**Non-Publication Request:** No

**Early Publication Request:** No
**Title**

METHOD FOR CODING AND AN APPARATUS

**Preliminary Class**

375

**Statement under 37 CFR 1.55 or 1.78 for AIA (First Inventor to File) Transition Applications:** No

## PROTECTING YOUR INVENTION OUTSIDE THE UNITED STATES

Since the rights granted by a U.S. patent extend only throughout the territory of the United States and have no effect in a foreign country, an inventor who wishes patent protection in another country must apply for a patent in a specific country or in regional patent offices. Applicants may wish to consider the filing of an international application under the Patent Cooperation Treaty (PCT). An international (PCT) application generally has the same effect as a regular national patent application in each PCT-member country. The PCT process **simplifies** the filing of patent applications on the same invention in member countries, but **does not result** in a grant of "an international patent" and does not eliminate the need of applicants to file additional documents and fees in countries where patent protection is desired.

Almost every country has its own patent law, and a person desiring a patent in a particular country must make an application for patent in that country in accordance with its particular laws. Since the laws of many countries differ in various respects from the patent law of the United States, applicants are advised to seek guidance from specific foreign countries to ensure that patent rights are not lost prematurely.

Applicants also are advised that in the case of inventions made in the United States, the Director of the USPTO must issue a license before applicants can apply for a patent in a foreign country. The filing of a U.S. patent application serves as a request for a foreign filing license. The application's filing receipt contains further information and guidance as to the status of applicant's license for foreign filing.

Applicants may wish to consult the USPTO booklet, "General Information Concerning Patents" (specifically, the section entitled "Treaties and Foreign Patents") for more information on timeframes and deadlines for filing foreign patent applications. The guide is available either by contacting the USPTO Contact Center at 800-786-9199, or it can be viewed on the USPTO website at http://www.uspto.gov/web/offices/pac/doc/general/index.html.

For information on preventing theft of your intellectual property (patents, trademarks and copyrights), you may wish to consult the U.S. Government website, http://www.stopfakes.gov. Part of a Department of Commerce initiative, this website includes self-help "toolkits" giving innovators guidance on how to protect intellectual property in specific



Amazon.com, Inc., Amazon.com Services LLC - Ex. 1002, Page 000095

countries such as China, Korea and Mexico. For questions regarding patent enforcement issues, applicants may call the U.S. Government hotline at 1-866-999-HALT (1-866-999-4258).

## LICENSE FOR FOREIGN FILING UNDER

## Title 35, United States Code, Section 184

## Title 37, Code of Federal Regulations, 5.11 & 5.15

**GRANTED**

The applicant has been granted a license under 35 U.S.C. 184, if the phrase "IF REQUIRED, FOREIGN FILING LICENSE GRANTED" followed by a date appears on this form. Such licenses are issued in all applications where the conditions for issuance of a license have been met, regardless of whether or not a license may be required as set forth in 37 CFR 5.15. The scope and limitations of this license are set forth in 37 CFR 5.15(a) unless an earlier license has been issued under 37 CFR 5.15(b). The license is subject to revocation upon written notification. The date indicated is the effective date of the license, unless an earlier license of similar scope has been granted under 37 CFR 5.13 or 5.14.

This license is to be retained by the licensee and may be used at any time on or after the effective date thereof unless it is revoked. This license is automatically transferred to any related applications(s) filed under 37 CFR 1.53(d). This license is not retroactive.

The grant of a license does not in any way lessen the responsibility of a licensee for the security of the subject matter as imposed by any Government contract or the provisions of existing laws relating to espionage and the national security or the export of technical data. Licensees should apprise themselves of current regulations especially with respect to certain countries, of other agencies, particularly the Office of Defense Trade Controls, Department of State (with respect to Arms, Munitions and Implements of War (22 CFR 121-128)); the Bureau of Industry and Security, Department of Commerce (15 CFR parts 730-774); the Office of Foreign AssetsControl, Department of Treasury (31 CFR Parts 500+) and the Department of Energy.

**NOT GRANTED**

No license under 35 U.S.C. 184 has been granted at this time, if the phrase "IF REQUIRED, FOREIGN FILING LICENSE GRANTED" DOES NOT appear on this form. Applicant may still petition for a license under 37 CFR 5.12, if a license is desired before the expiration of 6 months from the filing date of the application. If 6 months has lapsed from the filing date of this application and the licensee has not received any indication of a secrecy order under 35 U.S.C. 181, the licensee may foreign file the application pursuant to 37 CFR 5.15(b).

---

## *SelectUSA*

The United States represents the largest, most dynamic marketplace in the world and is an unparalleled location for business investment, innovation, and commercialization of new technologies. The U.S. offers tremendous resources and advantages for those who invest and manufacture goods here. Through SelectUSA, our nation works to promote and facilitate business investment. SelectUSA provides information assistance to the international investor community; serves as an ombudsman for existing and potential investors; advocates on behalf of U.S. cities, states, and regions competing for global investment; and counsels U.S. economic development organizations on investment attraction best practices. To learn more about why the United States is the best country in the world to develop



Amazon.com, Inc., Amazon.com Services LLC - Ex. 1002, Page 000096

technology, manufacture products, deliver services, and grow your business, visit http://www.SelectUSA.gov or call +1-202-482-6800.

Substitute for form SB08
(Revised 07/09)

# INFORMATION DISCLOSURE STATEMENT BY APPLICANT

*(Use as many sheets as necessary)*

| Complete if Known | |
|---|---|
| Application Number | 16/356,733 |
| Filing Date | March 18, 2019 |
| First Named Inventor | Bici et al. |
| Art Unit | 2488 |
| Examiner Name | S. V. Perungavoor |
| Attorney Docket Number | 042933/519745 |

| Sheet | 1 | of | 4 |
|---|---|---|---|

## U. S. PATENT DOCUMENTS

| Examiner Initials* | Cite No. | Document Number Number - Kind Code (if known) | Publication Date MM-DD-YYYY | Name of Patentee or Applicant of Cited Document | Pages, Columns, Lines, Where Relevant Passages of Relevant Figures Appear |
|---|---|---|---|---|---|
| | 1 | US-2004/0234144 A1 | 11-25-2004 | Sugimoto et al. | |
| | 2 | US-2007/0189389 A1 | 08-16-2007 | Boisson et al. | |
| | 3 | US-2008/0159401 A1 | 07-03-2008 | Lee et al. | |
| | 4 | US-2008/0232642 A1 | 09-25-2008 | Chang | |
| | 5 | US-2011/0170602 A1 | 07-14-2011 | Lee et al. | |
| | 6 | US-2011/0176013 A1 | 07-21-2011 | Robertson et al. | |
| | 7 | US-2011/0176612 A1 | 07-21-2011 | Tsai et al. | |
| | 8 | US-2011/0182362 A1 | 07-28-2011 | Kim et al. | |
| | 9 | US-2012/0230408 A1 | 09-13-2012 | Zhou | |
| | 10 | US-2012/0257678 A1 | 10-11-2012 | Zhou et al. | |
| | 11 | US-2012/0269270 A1 | 10-25-2012 | Chen et al. | |
| | 12 | US-2012/0300846 A1 | 11-29-2012 | Sugio et al. | |
| | 13 | US-2012/0307905 A1 | 12-06-2012 | Kim et al. | |
| | 14 | US-2012/0320984 A1 | 12-20-2012 | Zhou | |
| | 15 | US-2013/0003850 A1 | 01-03-2013 | Sugio et al. | |
| | 16 | US-2013/0004092 A1 | 01-03-2013 | Sasai et al. | |
| | 17 | US-2013/0070855 A1 | 03-21-2013 | Zheng et al. | |
| | 18 | US-2013/0083853 A1 | 04-04-2013 | Coban et al. | |
| | 19 | US-2013/0272408 A1 | 10-17-2013 | Chen et al. | |
| | | | | | |

## FOREIGN PATENT DOCUMENTS

| Examiner Initials | Cite No. | Foreign Patent Document Country Code - Number Kind Code (if known) | Publication Date MM-DD-YYYY | Name of Patentee or Applicant of Cited Document | Pages, Columns, Lines, Where Relevant Passages or Relevant Figures Appear | English Language Translation Attached |
|---|---|---|---|---|---|---|
| | 20 | CN 101271580 A | 09-24-2008 | HIMAX Tech Ltd | | |

| Examiner Signature | | Date Considered | |
|---|---|---|---|

*Examiner: Initial if reference considered, whether or not citation is in conformance with MPEP 609. Draw line through citation if not in conformance and not considered. Include copy of this form with next communication to applicant.

**Submitted June 17, 2019**

| Substitute for form SB08 (Revised 07/09) | Complete if Known | |
|---|---|---|
| **INFORMATION DISCLOSURE STATEMENT BY APPLICANT** *(Use as many sheets as necessary)* | Application Number | 16/356,733 |
| | Filing Date | March 18, 2019 |
| | First Named Inventor | Bici et al. |
| | Art Unit | 2488 |
| | Examiner Name | S. V. Perungavoor |
| Sheet 2 of 4 | Attorney Docket Number | 042933/519745 |

## FOREIGN PATENT DOCUMENTS

| Examiner Initials | Cite No. | Foreign Patent Document Country Code - Number Kind Code (if known) | Publication Date MM-DD-YYYY | Name of Patentee or Applicant of Cited Document | Pages, Columns, Lines, Where Relevant Passages or Relevant Figures Appear | English Language Translation Attached |
|---|---|---|---|---|---|---|
| | 21 | CN 101605255 B | 05-04-2011 | Huawei Tech Co Ltd | | |
| | 22 | CN 1757238 A | 04-05-2006 | Thomson Licensing | | |
| | 23 | WO 2011 115659 A1 | 09-22-2011 | Thomson Licensing | | |
| | 24 | WO 2011/062392 A2 | 05-26-2011 | SK Telecom Co. Ltd. | | |
| | | | | | | |

## OTHER DOCUMENTS

| Examiner Initials* | Cite No. | Include name of the author (in CAPITAL LETTERS), title of the article (when appropriate), title of the item (book, magazine, journal, serial, symposium, catalog, etc.), date, page(s), volume-issue number(s), publisher, city and/or country where published. | English Language Translation Attached |
|---|---|---|---|
| | 25 | Advisory Action for U.S. Patent Application No. 13/666,680 dated November 7, 2016, 4 pages. | |
| | 26 | **Bici, O. et al.**, *Non-CE13: Simplification of merge mode*, Joint Collaborative Team on Video Coding (JCT-VC) of ITU-T SG16 WP3 and ISO/IEC JTC1/SC29/WG11, 7th Meeting: Geneva, CH, 21-30 November, 2011, Document JCTVC-G593; URL: HTTP://WFTP3.ITU.INT/AV-ARCH/JCTVC-SITE/, 13 pages | |
| | 27 | **Bross, B. et al.**, *Core Experiment 9: MV Coding and Skip/Merge Operations*, Joint Collaborative Team on Video Coding (JCT-VC) of ITU-T SG16 WP3 and ISO/IEC JTC1/SC29/WG11, 6th Meeting, Torino, IT, 14-22 July, 2011; Document JCTVC-F909, 13 pages | |
| | 28 | **Bross, Benjamin, et al.**; *"WD4: Working Draft 4 of High-Efficiency Video Coding"*; Joint Collaborative Team on Video Coding (JCT-VC) of ITU-T SG16 WP3 and ISO/IEC JTC1/SC29/WG11; 6th Meeting; Torino, IT; 14-22 July 2011; Document JCTVC-F803_d; 232 pages | |
| | 29 | Extended European Search Report for corresponding European Application No. 12845839.5 dated March 21, 2016, 10 pages | |
| | 30 | Final Office Action for U.S. Patent Application No. 13/666,680 dated March 1, 2016, 35 pages. | |
| | 31 | **Han, Woo-Jin, et al.**; *"Improved Video Compression Efficiency Through Flexible Unit Representation and Corresponding Extension of Coding Tools"*; Circuits and Systems for Video Technology; IEEE Transactions on 20.12 (2010); 1709-1720 | |

| Examiner Signature | | Date Considered | |
|---|---|---|---|

*Examiner: Initial if reference considered, whether or not citation is in conformance with MPEP 609. Draw line through citation if not in conformance and not considered. Include copy of this form with next communication to applicant.

**Submitted June 17, 2019**

Substitute for form SB08
(Revised 07/09)

# INFORMATION DISCLOSURE STATEMENT BY APPLICANT

*(Use as many sheets as necessary)*

| Complete if Known | |
|---|---|
| Application Number | 16/356,733 |
| Filing Date | March 18, 2019 |
| First Named Inventor | Bici et al. |
| Art Unit | 2488 |
| Examiner Name | S. V. Perungavoor |
| Attorney Docket Number | 042933/519745 |

| Sheet | 3 | of | 4 |
|---|---|---|---|

## OTHER DOCUMENTS

| Examiner Initials* | Cite No. | Include name of the author (in CAPITAL LETTERS), title of the article (when appropriate), title of the item (book, magazine, journal, serial, symposium, catalog, etc.), date, page(s), volume-issue number(s), publisher, city and/or country where published. | English Language Translation Attached |
|---|---|---|---|
| | 32 | **Huang, Ai-Mei et al.**, *A multistage motion vector processing method for motion-compensated frame interpolation*, Image Processing, IEEE Transactions on 17.5 (2008) 694-708 | |
| | 33 | International Search Report and Written Opinion from corresponding International Application No. PCT/FI2012/051070, dated March 27, 2013 | |
| | 34 | **J.-L. Lin, Y.-W. Chen, Y.-W. Huang, S. Lei**; *"CE9: Results of Experiment ROB04"*; JCT-VC Doc. JCTVC-F052, Turin; Jul 2011 | |
| | 35 | **Jeon, Y. et al.**, *On MVP list pruning process*, Joint Collaborative Team on Video Coding (JCT-VC) of ITU-T SG16 WP3 and ISO/IEC JTC1/SC29/WG11, 6th Meeting, Torino, IT, 14-22 July, 2011, Document JCTVC-F105, 7 pages | |
| | 36 | **Nakamura, H. et al.**, *Unification of derivation process for merge mode and MVP*, Joint Collaborative Team on Video Coding (JCT-VC) of ITU-T SG16 WP3 and ISO/IEC JTC1/SC29/WG11, 6th Meeting; Torino, IT, 14-22 July, 2011; Document JCTVC-F419; URL: http://wftp3.itu.int/AV-ARCH/JCTVC-SITE/2011_07_F_Torino/, 10 pages | |
| | 37 | Notice of Allowance for U.S. Patent Application No. 13/666,680 dated September 30, 2016, 17 pages. | |
| | 38 | Notice of Allowance for U.S. Patent Application No. 15/426,822 dated March 10, 2017, 8 pages | |
| | 39 | Office Action for Canadian Application No. 2,854,495 dated September 6, 2016 | |
| | 40 | Office Action for Chinese Application No. 201280065777.5 dated October25, 2017 with English Translation, 8 pages | |
| | 41 | Office Action for Chinese Application No. 2012800657775 dated October 9, 2016 | |
| | 42 | Office Action for corresponding Indian Application No. 4092/CHENP/2014 dated April 11, 2018 with English Translation, 7 pages | |
| | 43 | Office Action for U.S. Patent Application No. 13/666,680 dated July 6, 2015, 25 pages. | |
| | 44 | Office Action for U.S. Patent Application No. 15/681,725 dated September 21, 2017 | |
| | 45 | Office Action from corresponding Canadian Patent Application No. 2,854,495, dated October 7, 2015 | |
| | 46 | Office Action from corresponding Korean Patent Application No. 2014-7015093, dated August 21, 2015 | |
| | 47 | Office Action from Korean Patent Application No. 2014-7015093 dated August 22, 2016 | |
| | 48 | **Oudin, S. et al.**; *"Block Merging for Quadtree-Based Video Coding"*; IEEE Int. Conf. on Multimedia and Expo; July 11-15; 2011; 6 pages | |

| Examiner Signature | | Date Considered | |
|---|---|---|---|

*Examiner: Initial if reference considered, whether or not citation is in conformance with MPEP 609. Draw line through citation if not in conformance and not considered. Include copy of this form with next communication to applicant.

**Submitted June 17, 2019**

| Substitute for form SB08 (Revised 07/09) | | | | Complete if Known | |
|---|---|---|---|---|---|
| **INFORMATION DISCLOSURE STATEMENT BY APPLICANT** *(Use as many sheets as necessary)* | | | | Application Number | 16/356,733 |
| | | | | Filing Date | March 18, 2019 |
| | | | | First Named Inventor | Bici et al. |
| | | | | Art Unit | 2488 |
| | | | | Examiner Name | S. V. Perungavoor |
| Sheet | 4 | of | 4 | Attorney Docket Number | 042933/519745 |

## OTHER DOCUMENTS

| Examiner Initials* | Cite No. | Include name of the author (in CAPITAL LETTERS), title of the article (when appropriate), title of the item (book, magazine, journal, serial, symposium, catalog, etc.), date, page(s), volume-issue number(s), publisher, city and/or country where published. | English Language Translation Attached |
|---|---|---|---|
| | 49 | **Sullivan, G.J.**; *"Overview of the High Efficiency Video Coding (HEVC) Standard"*; IEEE Trans. On Circuits and Systems for Video Technology; Vol. 22, No. 12; December 2012; pp. 1649-1668 | |
| | 50 | **Tai, Shen-Chuan, et al.**; *"A Multi-Pass True Motion Estimation Scheme with Motion Vector Propagation for Frame Rate Up-Conversion Applications"*; Journal of Display Technology; 4.2 (2008): 188-197 | |
| | 51 | Taiwanese Office Action and Search Report from Taiwanese Patent Application No. 101140777 dated December 2, 2015 | |
| | 52 | **Wiegand, Tomas, et al.**; *"WD3: Working Draft 3 of High-Efficiency Video Coding"*; Joint Collaborative Team on Video Coding (JCT-VC) of ITU-T SG16 WP3 and ISO/IEC JTC1/SC29/WG11; 5th Meeting; Geneva, CH, 16-23 March, 2011; Document JCTVC-E603; 239 pages | |
| | 53 | **Zheng, Y. et al.**, *Merge Candidate Selection in 2NxN, Nx2N, and NxN Mode*, Joint Collaborative Team on Video Coding (JCT-VC) of ITU-T SG16 WP3 and ISO/IEC JTC1/SC29/WG11, 6th Meeting, Torino, IT, 14-22 July, 2011; Document JCTVC-F302, 6 pages | |
| | 54 | Notice of Allowance for U.S. Application No. 15/681,725 dated May 30, 2018 | |
| | 55 | Notice of Allowance for U.S. Application No. 15/681,725 dated October 25, 2018 | |
| | 56 | Office Action for U.S. Application No. 13/666,680 dated March 1, 2016 | |
| | 57 | Office Action for European Application No. EP 12 845 839.5 dated June 6, 2019, 9 pages | |
| | | | |
| | | | |

| Examiner Signature | | Date Considered | |
|---|---|---|---|

*Examiner: Initial if reference considered, whether or not citation is in conformance with MPEP 609. Draw line through citation if not in conformance and not considered. Include copy of this form with next communication to applicant.

**Submitted June 17, 2019**

# Electronic Acknowledgement Receipt

| | |
|---|---|
| **EFS ID:** | 36316713 |
| **Application Number:** | 16356733 |
| **International Application Number:** | |
| **Confirmation Number:** | 3483 |
| **Title of Invention:** | METHOD FOR CODING AND AN APPARATUS |
| **First Named Inventor/Applicant Name:** | Mehmet Oguz BICI |
| **Customer Number:** | 10949 |
| **Filer:** | Guy Randall Gosnell/Joyce Smith |
| **Filer Authorized By:** | Guy Randall Gosnell |
| **Attorney Docket Number:** | 042933/519745 |
| **Receipt Date:** | 17-JUN-2019 |
| **Filing Date:** | 18-MAR-2019 |
| **Time Stamp:** | 13:42:43 |
| **Application Type:** | Utility under 35 USC 111(a) |

## Payment information:

| | |
|---|---|
| Submitted with Payment | no |

## File Listing:

| Document Number | Document Description | File Name | File Size(Bytes)/ Message Digest | Multi Part /.zip | Pages (if appl.) |
|---|---|---|---|---|---|
| 1 | | IDS519745.PDF | 434732<br>528ad61e0922c1fc76319e175ede598c46a9476b | yes | 5 |

| | Multipart Description/PDF files in .zip description | | |
|---|---|---|---|
| | **Document Description** | **Start** | **End** |
| | Transmittal Letter | 1 | 1 |
| | Information Disclosure Statement (IDS) Form (SB08) | 2 | 5 |

**Warnings:**

**Information:**

| | | | | | |
|---|---|---|---|---|---|
| 2 | Non Patent Literature | 519745_EPOA.PDF | 414838<br>7f9a84aa7fae298e3fa0f58f930d0af4b7ace795 | no | 9 |

**Warnings:**

**Information:**

| | |
|---|---|
| **Total Files Size (in bytes):** | 849570 |

**This Acknowledgement Receipt evidences receipt on the noted date by the USPTO of the indicated documents, characterized by the applicant, and including page counts, where applicable. It serves as evidence of receipt similar to a Post Card, as described in MPEP 503.**

**New Applications Under 35 U.S.C. 111**
**If a new application is being filed and the application includes the necessary components for a filing date (see 37 CFR 1.53(b)-(d) and MPEP 506), a Filing Receipt (37 CFR 1.54) will be issued in due course and the date shown on this Acknowledgement Receipt will establish the filing date of the application.**
**National Stage of an International Application under 35 U.S.C. 371**
**If a timely submission to enter the national stage of an international application is compliant with the conditions of 35 U.S.C. 371 and other applicable requirements a Form PCT/DO/EO/903 indicating acceptance of the application as a national stage submission under 35 U.S.C. 371 will be issued in addition to the Filing Receipt, in due course.**
**New International Application Filed with the USPTO as a Receiving Office**
**If a new international application is being filed and the international application includes the necessary components for an international filing date (see PCT Article 11 and MPEP 1810), a Notification of the International Application Number and of the International Filing Date (Form PCT/RO/105) will be issued in due course, subject to prescriptions concerning national security, and the date shown on this Acknowledgement Receipt will establish the international filing date of the application.**

Attorney's Docket No. 042933/519745 PATENT

**IN THE UNITED STATES PATENT AND TRADEMARK OFFICE**

| | | | |
|---|---|---|---|
| In re: | Bici et al. | Confirmation No.: | 3483 |
| Appl. No.: | 16/356,733 | Art Unit: | 2488 |
| Filed: | March 18, 2019 | Examiner: | S.V. Perungavoor |
| For: | METHOD FOR CODING AND AN APPARATUS | | |

Submitted via EFS-Web
Commissioner for Patents
P.O. Box 1450
Alexandria, VA 22313-1450

**INFORMATION DISCLOSURE STATEMENT**
**CITATION UNDER 37 C.F.R. § 1.97**

Attached is a list of documents on form PTO-SB08.

It is requested that the Examiner consider these documents and officially make them of record in accordance with the provisions of 37 C.F.R. § 1.97 and Section 609 of the MPEP. By identifying the listed documents, Applicant in no way makes any admission as to the prior art status of the listed documents, but is instead identifying the listed documents for the sake of full disclosure.

Copies of all listed documents (other than U.S. patents, U.S. patent application publications, or patents or publications otherwise determined cumulative) are attached, except those (if any) that were previously submitted to, or cited by, the Office during the prosecution of any application(s) upon which the present application directly relies for an earlier effective filing date under 35 U.S.C. § 120. It is noted that 37 C.F.R. § 1.98(d) establishes that copies of documents previously submitted to, or cited by, the Office during prosecution of said application(s) are not required to be furnished; however, copies of such documents will be furnished upon request.

In accordance with 37 C.F.R. § 1.98(d) the reference above to said application(s) includes those application(s) properly identified in the table below:

| Application No. | Filing Date | Pub./Patent No. | Status |
|---|---|---|---|
| 15/681,725 | August 21, 2017 | 10,237,574 | Patented |
| 15/426,822 | February 7, 2017 | 9,743,105 | Patented |
| 13/666,680 | November 1, 2012 | 9,571,833 | Patented |
| | | | |

Respectfully submitted,

Guy R. Gosnell
Registration No. 34,610

**Customer No. 10949**
**ALSTON & BIRD LLP**
Bank of America Plaza
101 South Tryon Street, Suite 4000
Charlotte, NC 28280-4000
Tel Charlotte Office (704) 444-1000
Fax Charlotte Office (704) 444-1111

LEGAL02/39034874v1

UNITED STATES PATENT AND TRADEMARK OFFICE

UNITED STATES DEPARTMENT OF COMMERCE
**United States Patent and Trademark Office**
Address: COMMISSIONER FOR PATENTS
P.O. Box 1450
Alexandria, Virginia 22313-1450
www.uspto.gov

| APPLICATION NUMBER | FILING OR 371(C) DATE | FIRST NAMED APPLICANT | ATTY. DOCKET NO./TITLE |
|---|---|---|---|
| 16/356,733 | 03/18/2019 | Mehmet Oguz BICI | 042933/519745 |

**CONFIRMATION NO. 3483**

**PUBLICATION NOTICE**

*OC000000109566388*

10949
Nokia Corporation and Alston & Bird LLP
c/o Alston & Bird LLP
Bank of America Plaza, 101 South Tryon Street
Suite 4000
Charlotte, NC 28280-4000

**Title:**METHOD FOR CODING AND AN APPARATUS

**Publication No.**US-2019-0215530-A1
**Publication Date:**07/11/2019

## NOTICE OF PUBLICATION OF APPLICATION

The above-identified application will be electronically published as a patent application publication pursuant to 37 CFR 1.211, et seq. The patent application publication number and publication date are set forth above.

The publication may be accessed through the USPTO's publically available Searchable Databases via the Internet at www.uspto.gov. The direct link to access the publication is currently http://www.uspto.gov/patft/.

The publication process established by the Office does not provide for mailing a copy of the publication to applicant. A copy of the publication may be obtained from the Office upon payment of the appropriate fee set forth in 37 CFR 1.19(a)(1). Orders for copies of patent application publications are handled by the USPTO's Public Records Division. The Public Records Division can be reached by telephone at (571) 272-3150 or (800) 972-6382, by facsimile at (571) 273-3250, by mail addressed to the United States Patent and Trademark Office, Public Records Division, Alexandria, VA 22313-1450 or via the Internet.

In addition, information on the status of the application, including the mailing date of Office actions and the dates of receipt of correspondence filed in the Office, may also be accessed via the Internet through the Patent Electronic Business Center at www.uspto.gov using the public side of the Patent Application Information and Retrieval (PAIR) system. The direct link to access this status information is currently https://portal.uspto.gov/pair/PublicPair. Prior to publication, such status information is confidential and may only be obtained by applicant using the private side of PAIR.

Further assistance in electronically accessing the publication, or about PAIR, is available by calling the Patent Electronic Business Center at 1-866-217-9197.

Office of Data Managment, Application Assistance Unit (571) 272-4000, or (571) 272-4200, or 1-888-786-0101



Amazon.com, Inc., Amazon.com Services LLC - Ex. 1002, Page 000105

| **Doc Code: DIST.E.FILE**<br>**Document Description: Electronic Terminal Disclaimer - Filed** | PTO/SB/26<br>U.S. Patent and Trademark Office<br>Department of Commerce |
|---|---|

| | |
|---|---|
| Electronic Petition Request | **TERMINAL DISCLAIMER TO OBVIATE A DOUBLE PATENTING REJECTION OVER A "PRIOR" PATENT** |
| Application Number | 16356733 |
| Filing Date | 18-Mar-2019 |
| First Named Inventor | Mehmet BICI |
| Attorney Docket Number | 042933/519745 |
| Title of Invention | METHOD FOR CODING AND AN APPARATUS |

☒ Filing of terminal disclaimer does not obviate requirement for response under 37 CFR 1.111 to outstanding Office Action

☒ This electronic Terminal Disclaimer is not being used for a Joint Research Agreement.

| Owner | Percent Interest |
|---|---|
| Nokia Technologies Oy | 100% |

The owner(s) with percent interest listed above in the instant application hereby disclaims, except as provided below, the terminal part of the statutory term of any patent granted on the instant application which would extend beyond the expiration date of the full statutory term of prior patent number(s)

10237574

9743105

9571833

as the term of said prior patent is presently shortened by any terminal disclaimer. The owner hereby agrees that any patent so granted on the instant application shall be enforceable only for and during such period that it and the prior patent are commonly owned. This agreement runs with any patent granted on the instant application and is binding upon the grantee, its successors or assigns.

In making the above disclaimer, the owner does not disclaim the terminal part of the term of any patent granted on the instant application that would extend to the expiration date of the full statutory term of the prior patent, "as the term of said prior patent is presently shortened by any terminal disclaimer," in the event that said prior patent later:
- expires for failure to pay a maintenance fee;
- is held unenforceable;
- is found invalid by a court of competent jurisdiction;
- is statutorily disclaimed in whole or terminally disclaimed under 37 CFR 1.321;
- has all claims canceled by a reexamination certificate;
- is reissued; or
- is in any manner terminated prior to the expiration of its full statutory term as presently shortened by any terminal disclaimer.

- [x] Terminal disclaimer fee under 37 CFR 1.20(d) is included with Electronic Terminal Disclaimer request.
- [ ] I certify, in accordance with 37 CFR 1.4(d)(4), that the terminal disclaimer fee under 37 CFR 1.20(d) required for this terminal disclaimer has already been paid in the above-identified application.

Applicant claims the following fee status:

- [ ] Small Entity
- [ ] Micro Entity
- [x] Regular Undiscounted

I hereby declare that all statements made herein of my own knowledge are true and that all statements made on information and belief are believed to be true; and further that these statements were made with the knowledge that willful false statements and the like so made are punishable by fine or imprisonment, or both, under Section 1001 of Title 18 of the United States Code and that such willful false statements may jeopardize the validity of the application or any patent issued thereon.

THIS PORTION MUST BE COMPLETED BY THE SIGNATORY OR SIGNATORIES

I certify, in accordance with 37 CFR 1.4(d)(4) that I am:

- [x] An attorney or agent registered to practice before the Patent and Trademark Office who is of record in this application

  Registration Number 34610

- [ ] A sole inventor
- [ ] A joint inventor; I certify that I am authorized to sign this submission on behalf of all of the inventors as evidenced by the power of attorney in the application
- [ ] A joint inventor; all of whom are signing this request

| | |
|---|---|
| Signature | /Guy R. Gosnell/ |
| Name | Guy R. Gosnell |

*Statement under 37 CFR 3.73(b) is required if terminal disclaimer is signed by the assignee (owner).
Form PTO/SB/96 may be used for making this certification. See MPEP § 324.

# Electronic Patent Application Fee Transmittal

| | |
|---|---|
| **Application Number:** | 16356733 |
| **Filing Date:** | 18-Mar-2019 |
| **Title of Invention:** | METHOD FOR CODING AND AN APPARATUS |
| **First Named Inventor/Applicant Name:** | Mehmet Oguz BICI |
| **Filer:** | Guy Randall Gosnell/Janet Snider |
| **Attorney Docket Number:** | 042933/519745 |

Filed as Large Entity

**Filing Fees for Utility under 35 USC 111(a)**

| Description | Fee Code | Quantity | Amount | Sub-Total in USD($) |
|---|---|---|---|---|
| **Basic Filing:** | | | | |
| STATUTORY OR TERMINAL DISCLAIMER | 1814 | 1 | 160 | 160 |
| **Pages:** | | | | |
| **Claims:** | | | | |
| **Miscellaneous-Filing:** | | | | |
| **Petition:** | | | | |
| **Patent-Appeals-and-Interference:** | | | | |
| **Post-Allowance-and-Post-Issuance:** | | | | |

| Description | Fee Code | Quantity | Amount | Sub-Total in USD($) |
|---|---|---|---|---|
| **Extension-of-Time:** | | | | |
| **Miscellaneous:** | | | | |
| | | | **Total in USD ($)** | **160** |

Doc Code: DISQ.E.FILE
Document Description: Electronic Terminal Disclaimer – Approved

Application No.: 16356733

Filing Date: 18-Mar-2019

Applicant/Patent under Reexamination: BICI

Electronic Terminal Disclaimer filed on August 8, 2019

☒ APPROVED

**This patent is subject to a terminal disclaimer**

☐ DISAPPROVED

Approved/Disapproved by: Electronic Terminal Disclaimer automatically approved by EFS-Web

U.S. Patent and Trademark Office

# Electronic Acknowledgement Receipt

| | |
|---|---|
| **EFS ID:** | 36825625 |
| **Application Number:** | 16356733 |
| **International Application Number:** | |
| **Confirmation Number:** | 3483 |
| **Title of Invention:** | METHOD FOR CODING AND AN APPARATUS |
| **First Named Inventor/Applicant Name:** | Mehmet Oguz BICI |
| **Customer Number:** | 10949 |
| **Filer:** | Guy Randall Gosnell/Janet Snider |
| **Filer Authorized By:** | Guy Randall Gosnell |
| **Attorney Docket Number:** | 042933/519745 |
| **Receipt Date:** | 08-AUG-2019 |
| **Filing Date:** | 18-MAR-2019 |
| **Time Stamp:** | 16:42:52 |
| **Application Type:** | Utility under 35 USC 111(a) |

## Payment information:

| | |
|---|---|
| Submitted with Payment | yes |
| Payment Type | DA |
| Payment was successfully received in RAM | $160 |
| RAM confirmation Number | E201988G42505250 |
| Deposit Account | |
| Authorized User | |

The Director of the USPTO is hereby authorized to charge indicated fees and credit any overpayment as follows:

## File Listing:

| Document Number | Document Description | File Name | File Size(Bytes)/ Message Digest | Multi Part /.zip | Pages (if appl.) |
|---|---|---|---|---|---|
| 1 | Terminal Disclaimer-Filed (Electronic) | eTerminal-Disclaimer.pdf | 33755<br>0d90cf4e90707fbb131493ed061dd0bff4b1e21c | no | 2 |
| **Warnings:** | | | | | |
| **Information:** | | | | | |
| 2 | Fee Worksheet (SB06) | fee-info.pdf | 30505<br>2539a59c7a397e7c5c2e7d162a3cb84e027be1b2 | no | 2 |
| **Warnings:** | | | | | |
| **Information:** | | | | | |
| | | **Total Files Size (in bytes):** | 64260 | | |

**This Acknowledgement Receipt evidences receipt on the noted date by the USPTO of the indicated documents, characterized by the applicant, and including page counts, where applicable. It serves as evidence of receipt similar to a Post Card, as described in MPEP 503.**

**New Applications Under 35 U.S.C. 111**
**If a new application is being filed and the application includes the necessary components for a filing date (see 37 CFR 1.53(b)-(d) and MPEP 506), a Filing Receipt (37 CFR 1.54) will be issued in due course and the date shown on this Acknowledgement Receipt will establish the filing date of the application.**
**National Stage of an International Application under 35 U.S.C. 371**
**If a timely submission to enter the national stage of an international application is compliant with the conditions of 35 U.S.C. 371 and other applicable requirements a Form PCT/DO/EO/903 indicating acceptance of the application as a national stage submission under 35 U.S.C. 371 will be issued in addition to the Filing Receipt, in due course.**
**New International Application Filed with the USPTO as a Receiving Office**
**If a new international application is being filed and the international application includes the necessary components for an international filing date (see PCT Article 11 and MPEP 1810), a Notification of the International Application Number and of the International Filing Date (Form PCT/RO/105) will be issued in due course, subject to prescriptions concerning national security, and the date shown on this Acknowledgement Receipt will establish the international filing date of the application.**

UNITED STATES PATENT AND TRADEMARK OFFICE

UNITED STATES DEPARTMENT OF COMMERCE
**United States Patent and Trademark Office**
Address: COMMISSIONER FOR PATENTS
P.O. Box 1450
Alexandria, Virginia 22313-1450
www.uspto.gov

# NOTICE OF ALLOWANCE AND FEE(S) DUE

10949 7590 08/30/2019
Nokia Corporation and Alston & Bird LLP
c/o Alston & Bird LLP
Bank of America Plaza, 101 South Tryon Street
Suite 4000
Charlotte, NC 28280-4000

| EXAMINER |
|---|
| AYNALEM, NATHNAEL B |

| ART UNIT | PAPER NUMBER |
|---|---|
| 2488 | |

DATE MAILED: 08/30/2019

| APPLICATION NO. | FILING DATE | FIRST NAMED INVENTOR | ATTORNEY DOCKET NO. | CONFIRMATION NO. |
|---|---|---|---|---|
| 16/356,733 | 03/18/2019 | Mehmet Oguz BICI | 042933/519745 | 3483 |

TITLE OF INVENTION: METHOD FOR CODING AND AN APPARATUS

| APPLN. TYPE | ENTITY STATUS | ISSUE FEE DUE | PUBLICATION FEE DUE | PREV. PAID ISSUE FEE | TOTAL FEE(S) DUE | DATE DUE |
|---|---|---|---|---|---|---|
| nonprovisional | UNDISCOUNTED | $1000 | $0.00 | $0.00 | $1000 | 12/02/2019 |

**THE APPLICATION IDENTIFIED ABOVE HAS BEEN EXAMINED AND IS ALLOWED FOR ISSUANCE AS A PATENT. PROSECUTION ON THE MERITS IS CLOSED. THIS NOTICE OF ALLOWANCE IS NOT A GRANT OF PATENT RIGHTS. THIS APPLICATION IS SUBJECT TO WITHDRAWAL FROM ISSUE AT THE INITIATIVE OF THE OFFICE OR UPON PETITION BY THE APPLICANT. SEE 37 CFR 1.313 AND MPEP 1308.**

**THE ISSUE FEE AND PUBLICATION FEE (IF REQUIRED) MUST BE PAID WITHIN THREE MONTHS FROM THE MAILING DATE OF THIS NOTICE OR THIS APPLICATION SHALL BE REGARDED AS ABANDONED. THIS STATUTORY PERIOD CANNOT BE EXTENDED. SEE 35 U.S.C. 151. THE ISSUE FEE DUE INDICATED ABOVE DOES NOT REFLECT A CREDIT FOR ANY PREVIOUSLY PAID ISSUE FEE IN THIS APPLICATION. IF AN ISSUE FEE HAS PREVIOUSLY BEEN PAID IN THIS APPLICATION (AS SHOWN ABOVE), THE RETURN OF PART B OF THIS FORM WILL BE CONSIDERED A REQUEST TO REAPPLY THE PREVIOUSLY PAID ISSUE FEE TOWARD THE ISSUE FEE NOW DUE.**

**HOW TO REPLY TO THIS NOTICE:**

I. Review the ENTITY STATUS shown above. If the ENTITY STATUS is shown as SMALL or MICRO, verify whether entitlement to that entity status still applies.

If the ENTITY STATUS is the same as shown above, pay the TOTAL FEE(S) DUE shown above.

If the ENTITY STATUS is changed from that shown above, on PART B - FEE(S) TRANSMITTAL, complete section number 5 titled "Change in Entity Status (from status indicated above)".

For purposes of this notice, small entity fees are 1/2 the amount of undiscounted fees, and micro entity fees are 1/2 the amount of small entity fees.

II. PART B - FEE(S) TRANSMITTAL, or its equivalent, must be completed and returned to the United States Patent and Trademark Office (USPTO) with your ISSUE FEE and PUBLICATION FEE (if required). If you are charging the fee(s) to your deposit account, section "4b" of Part B - Fee(s) Transmittal should be completed and an extra copy of the form should be submitted. If an equivalent of Part B is filed, a request to reapply a previously paid issue fee must be clearly made, and delays in processing may occur due to the difficulty in recognizing the paper as an equivalent of Part B.

III. All communications regarding this application must give the application number. Please direct all communications prior to issuance to Mail Stop ISSUE FEE unless advised to the contrary.

**IMPORTANT REMINDER: Maintenance fees are due in utility patents issuing on applications filed on or after Dec. 12, 1980. It is patentee's responsibility to ensure timely payment of maintenance fees when due. More information is available at www.uspto.gov/PatentMaintenanceFees.**





Amazon.com, Inc., Amazon.com Services LLC - Ex. 1002, Page 000113

# PART B - FEE(S) TRANSMITTAL

Complete and send this form, together with applicable fee(s), by mail or fax, or via EFS-Web.

By mail, send to: Mail Stop ISSUE FEE
Commissioner for Patents
P.O. Box 1450
Alexandria, Virginia 22313-1450

By fax, send to: (571)-273-2885

INSTRUCTIONS: This form should be used for transmitting the ISSUE FEE and PUBLICATION FEE (if required). Blocks 1 through 5 should be completed where appropriate. All further correspondence including the Patent, advance orders and notification of maintenance fees will be mailed to the current correspondence address as indicated unless corrected below or directed otherwise in Block 1, by (a) specifying a new correspondence address; and/or (b) indicating a separate "FEE ADDRESS" for maintenance fee notifications.

CURRENT CORRESPONDENCE ADDRESS (Note: Use Block 1 for any change of address)

10949 7590 08/30/2019
Nokia Corporation and Alston & Bird LLP
c/o Alston & Bird LLP
Bank of America Plaza, 101 South Tryon Street
Suite 4000
Charlotte, NC 28280-4000

Note: A certificate of mailing can only be used for domestic mailings of the Fee(s) Transmittal. This certificate cannot be used for any other accompanying papers. Each additional paper, such as an assignment or formal drawing, must have its own certificate of mailing or transmission.

**Certificate of Mailing or Transmission**

I hereby certify that this Fee(s) Transmittal is being deposited with the United States Postal Service with sufficient postage for first class mail in an envelope addressed to the Mail Stop ISSUE FEE address above, or being transmitted to the USPTO via EFS-Web or by facsimile to (571) 273-2885, on the date below.

(Typed or printed name)
(Signature)
(Date)

| APPLICATION NO. | FILING DATE | FIRST NAMED INVENTOR | ATTORNEY DOCKET NO. | CONFIRMATION NO. |
|---|---|---|---|---|
| 16/356,733 | 03/18/2019 | Mehmet Oguz BICI | 042933/519745 | 3483 |

TITLE OF INVENTION: METHOD FOR CODING AND AN APPARATUS

| APPLN. TYPE | ENTITY STATUS | ISSUE FEE DUE | PUBLICATION FEE DUE | PREV. PAID ISSUE FEE | TOTAL FEE(S) DUE | DATE DUE |
|---|---|---|---|---|---|---|
| nonprovisional | UNDISCOUNTED | $1000 | $0.00 | $0.00 | $1000 | 12/02/2019 |

| EXAMINER | ART UNIT | CLASS-SUBCLASS |
|---|---|---|
| AYNALEM, NATHNAEL B | 2488 | 375-240160 |

1. Change of correspondence address or indication of "Fee Address" (37 CFR 1.363).

❑ Change of correspondence address (or Change of Correspondence Address form PTO/SB/122) attached.

❑ "Fee Address" indication (or "Fee Address" Indication form PTO/SB/47; Rev 03-09 or more recent) attached. **Use of a Customer Number is required.**

2. For printing on the patent front page, list
(1) The names of up to 3 registered patent attorneys or agents OR, alternatively,
(2) The name of a single firm (having as a member a registered attorney or agent) and the names of up to 2 registered patent attorneys or agents. If no name is listed, no name will be printed.

1_____
2_____
3_____

3. ASSIGNEE NAME AND RESIDENCE DATA TO BE PRINTED ON THE PATENT (print or type)

PLEASE NOTE: Unless an assignee is identified below, no assignee data will appear on the patent. If an assignee is identified below, the document must have been previously recorded, or filed for recordation, as set forth in 37 CFR 3.11 and 37 CFR 3.81(a). Completion of this form is NOT a substitute for filing an assignment.

(A) NAME OF ASSIGNEE (B) RESIDENCE: (CITY and STATE OR COUNTRY)

Please check the appropriate assignee category or categories (will not be printed on the patent) : ❑ Individual ❑ Corporation or other private group entity ❑ Government

4a. Fees submitted: ❑Issue Fee ❑Publication Fee (if required) ❑Advance Order - # of Copies _____

4b. Method of Payment: *(Please first reapply any previously paid fee shown above)*

❑ Electronic Payment via EFS-Web ❑ Enclosed check ❑ Non-electronic payment by credit card (Attach form PTO-2038)

❑ The Director is hereby authorized to charge the required fee(s), any deficiency, or credit any overpayment to Deposit Account No. _____

5. **Change in Entity Status** (from status indicated above)

❑ Applicant certifying micro entity status. See 37 CFR 1.29

❑ Applicant asserting small entity status. See 37 CFR 1.27

❑ Applicant changing to regular undiscounted fee status.

NOTE: Absent a valid certification of Micro Entity Status (see forms PTO/SB/15A and 15B), issue fee payment in the micro entity amount will not be accepted at the risk of application abandonment.
NOTE: If the application was previously under micro entity status, checking this box will be taken to be a notification of loss of entitlement to micro entity status.
NOTE: Checking this box will be taken to be a notification of loss of entitlement to small or micro entity status, as applicable.

NOTE: This form must be signed in accordance with 37 CFR 1.31 and 1.33. See 37 CFR 1.4 for signature requirements and certifications.

Authorized Signature _____ Date _____

Typed or printed name _____ Registration No. _____


Amazon.com, Inc., Amazon.com Services LLC - Ex. 1002, Page 000114

UNITED STATES DEPARTMENT OF COMMERCE
United States Patent and Trademark Office
Address: COMMISSIONER FOR PATENTS
P.O. Box 1450
Alexandria, Virginia 22313-1450
www.uspto.gov

| APPLICATION NO. | FILING DATE | FIRST NAMED INVENTOR | ATTORNEY DOCKET NO. | CONFIRMATION NO. |
|---|---|---|---|---|
| 16/356,733 | 03/18/2019 | Mehmet Oguz BICI | 042933/519745 | 3483 |

10949 7590 08/30/2019
Nokia Corporation and Alston & Bird LLP
c/o Alston & Bird LLP
Bank of America Plaza, 101 South Tryon Street
Suite 4000
Charlotte, NC 28280-4000

| EXAMINER |
|---|
| AYNALEM, NATHNAEL B |

| ART UNIT | PAPER NUMBER |
|---|---|
| 2488 | |

DATE MAILED: 08/30/2019

**Determination of Patent Term Adjustment under 35 U.S.C. 154 (b)**
(Applications filed on or after May 29, 2000)

The Office has discontinued providing a Patent Term Adjustment (PTA) calculation with the Notice of Allowance.

Section 1(h)(2) of the AIA Technical Corrections Act amended 35 U.S.C. 154(b)(3)(B)(i) to eliminate the requirement that the Office provide a patent term adjustment determination with the notice of allowance. See Revisions to Patent Term Adjustment, 78 Fed. Reg. 19416, 19417 (Apr. 1, 2013). Therefore, the Office is no longer providing an initial patent term adjustment determination with the notice of allowance. The Office will continue to provide a patent term adjustment determination with the Issue Notification Letter that is mailed to applicant approximately three weeks prior to the issue date of the patent, and will include the patent term adjustment on the patent. Any request for reconsideration of the patent term adjustment determination (or reinstatement of patent term adjustment) should follow the process outlined in 37 CFR 1.705.

Any questions regarding the Patent Term Extension or Adjustment determination should be directed to the Office of Patent Legal Administration at (571)-272-7702. Questions relating to issue and publication fee payments should be directed to the Customer Service Center of the Office of Patent Publication at 1-(888)-786-0101 or (571)-272-4200.





Amazon.com, Inc., Amazon.com Services LLC - Ex. 1002, Page 000115

## OMB Clearance and PRA Burden Statement for PTOL-85 Part B

The Paperwork Reduction Act (PRA) of 1995 requires Federal agencies to obtain Office of Management and Budget approval before requesting most types of information from the public. When OMB approves an agency request to collect information from the public, OMB (i) provides a valid OMB Control Number and expiration date for the agency to display on the instrument that will be used to collect the information and (ii) requires the agency to inform the public about the OMB Control Number's legal significance in accordance with 5 CFR 1320.5(b).

The information collected by PTOL-85 Part B is required by 37 CFR 1.311. The information is required to obtain or retain a benefit by the public which is to file (and by the USPTO to process) an application. Confidentiality is governed by 35 U.S.C. 122 and 37 CFR 1.14. This collection is estimated to take 30 minutes to complete, including gathering, preparing, and submitting the completed application form to the USPTO. Time will vary depending upon the individual case. Any comments on the amount of time you require to complete this form and/or suggestions for reducing this burden, should be sent to the Chief Information Officer, U.S. Patent and Trademark Office, U.S. Department of Commerce, P.O. Box 1450, Alexandria, Virginia 22313-1450. DO NOT SEND FEES OR COMPLETED FORMS TO THIS ADDRESS. SEND TO: Commissioner for Patents, P.O. Box 1450, Alexandria, Virginia 22313-1450. Under the Paperwork Reduction Act of 1995, no persons are required to respond to a collection of information unless it displays a valid OMB control number.

## Privacy Act Statement

**The Privacy Act of 1974 (P.L. 93-579)** requires that you be given certain information in connection with your submission of the attached form related to a patent application or patent. Accordingly, pursuant to the requirements of the Act, please be advised that: (1) the general authority for the collection of this information is 35 U.S.C. 2(b)(2); (2) furnishing of the information solicited is voluntary; and (3) the principal purpose for which the information is used by the U.S. Patent and Trademark Office is to process and/or examine your submission related to a patent application or patent. If you do not furnish the requested information, the U.S. Patent and Trademark Office may not be able to process and/or examine your submission, which may result in termination of proceedings or abandonment of the application or expiration of the patent.

The information provided by you in this form will be subject to the following routine uses:

1. The information on this form will be treated confidentially to the extent allowed under the Freedom of Information Act (5 U.S.C. 552) and the Privacy Act (5 U.S.C 552a). Records from this system of records may be disclosed to the Department of Justice to determine whether disclosure of these records is required by the Freedom of Information Act.
2. A record from this system of records may be disclosed, as a routine use, in the course of presenting evidence to a court, magistrate, or administrative tribunal, including disclosures to opposing counsel in the course of settlement negotiations.
3. A record in this system of records may be disclosed, as a routine use, to a Member of Congress submitting a request involving an individual, to whom the record pertains, when the individual has requested assistance from the Member with respect to the subject matter of the record.
4. A record in this system of records may be disclosed, as a routine use, to a contractor of the Agency having need for the information in order to perform a contract. Recipients of information shall be required to comply with the requirements of the Privacy Act of 1974, as amended, pursuant to 5 U.S.C. 552a(m).
5. A record related to an International Application filed under the Patent Cooperation Treaty in this system of records may be disclosed, as a routine use, to the International Bureau of the World Intellectual Property Organization, pursuant to the Patent Cooperation Treaty.
6. A record in this system of records may be disclosed, as a routine use, to another federal agency for purposes of National Security review (35 U.S.C. 181) and for review pursuant to the Atomic Energy Act (42 U.S.C. 218(c)).
7. A record from this system of records may be disclosed, as a routine use, to the Administrator, General Services, or his/her designee, during an inspection of records conducted by GSA as part of that agency's responsibility to recommend improvements in records management practices and programs, under authority of 44 U.S.C. 2904 and 2906. Such disclosure shall be made in accordance with the GSA regulations governing inspection of records for this purpose, and any other relevant (i.e., GSA or Commerce) directive. Such disclosure shall not be used to make determinations about individuals.
8. A record from this system of records may be disclosed, as a routine use, to the public after either publication of the application pursuant to 35 U.S.C. 122(b) or issuance of a patent pursuant to 35 U.S.C. 151. Further, a record may be disclosed, subject to the limitations of 37 CFR 1.14, as a routine use, to the public if the record was filed in an application which became abandoned or in which the proceedings were terminated and which application is referenced by either a published application, an application open to public inspection or an issued patent.
9. A record from this system of records may be disclosed, as a routine use, to a Federal, State, or local law enforcement agency, if the USPTO becomes aware of a violation or potential violation of law or regulation.

| Notice of Allowability | Application No. 16/356,733 | Applicant(s) BICI et al. | |
|---|---|---|---|
| | Examiner NATHNAEL AYNALEM | Art Unit 2488 | AIA (FITF) Status No |

***-- The MAILING DATE of this communication appears on the cover sheet with the correspondence address--***

All claims being allowable, PROSECUTION ON THE MERITS IS (OR REMAINS) CLOSED in this application. If not included herewith (or previously mailed), a Notice of Allowance (PTOL-85) or other appropriate communication will be mailed in due course. **THIS NOTICE OF ALLOWABILITY IS NOT A GRANT OF PATENT RIGHTS.** This application is subject to withdrawal from issue at the initiative of the Office or upon petition by the applicant. See 37 CFR 1.313 and MPEP 1308.

1. ☑ This communication is responsive to application filed on 03/18/2019.
   ☐ A declaration(s)/affidavit(s) under **37 CFR 1.130(b)** was/were filed on _____.

2. ☐ An election was made by the applicant in response to a restriction requirement set forth during the interview on _____; the restriction requirement and election have been incorporated into this action.

3. ☑ The allowed claim(s) is/are 1-30 . As a result of the allowed claim(s), you may be eligible to benefit from the **Patent Prosecution Highway** program at a participating intellectual property office for the corresponding application. For more information, please see **http://www.uspto.gov/patents/init_events/pph/index.jsp** or send an inquiry to **PPHfeedback@uspto.gov.**

4. ☐ Acknowledgment is made of a claim for foreign priority under 35 U.S.C. § 119(a)-(d) or (f).

   **Certified copies:**

   a) ☐ All  b) ☐ Some  *c) ☐ None of the:

   1. ☐ Certified copies of the priority documents have been received.
   2. ☐ Certified copies of the priority documents have been received in Application No. _____ .
   3. ☐ Copies of the certified copies of the priority documents have been received in this national stage application from the International Bureau (PCT Rule 17.2(a)).

   * Certified copies not received: _____ .

Applicant has THREE MONTHS FROM THE "MAILING DATE" of this communication to file a reply complying with the requirements noted below. Failure to timely comply will result in ABANDONMENT of this application.
**THIS THREE-MONTH PERIOD IS NOT EXTENDABLE.**

5. ☐ CORRECTED DRAWINGS (as "replacement sheets") must be submitted.
   ☐ including changes required by the attached Examiner's Amendment / Comment or in the Office action of Paper No./Mail Date _____ .

   **Identifying indicia such as the application number (see 37 CFR 1.84(c)) should be written on the drawings in the front (not the back) of each sheet. Replacement sheet(s) should be labeled as such in the header according to 37 CFR 1.121(d).**

6. ☐ DEPOSIT OF and/or INFORMATION about the deposit of BIOLOGICAL MATERIAL must be submitted. Note the attached Examiner's comment regarding REQUIREMENT FOR THE DEPOSIT OF BIOLOGICAL MATERIAL.

**Attachment(s)**

1. ☑ Notice of References Cited (PTO-892)
2. ☑ Information Disclosure Statements (PTO/SB/08), Paper No./Mail Date _____.
3. ☐ Examiner's Comment Regarding Requirement for Deposit of Biological Material _____.
4. ☐ Interview Summary (PTO-413), Paper No./Mail Date. _____.
5. ☐ Examiner's Amendment/Comment
6. ☑ Examiner's Statement of Reasons for Allowance
7. ☐ Other _____.

/NATHNAEL AYNALEM/
Primary Examiner, Art Unit 2488



Amazon.com, Inc., Amazon.com Services LLC - Ex. 1002, Page 000117

## DETAILED ACTION

### *Notice of Pre-AIA or AIA Status*

This is in response to Application No. 16/356,733 filed on March 18, 2019. The present application is being examined under the pre-AIA first to invent provisions.

### *Allowable Subject Matter*

Claims 1-30 are allowed.

The following is an examiner's statement of reasons for allowance:

Regarding claim 1, the current application is a continuation of patent issued application no. 13/666,680 and includes limitations analogous to the claims of the patented application. Therefore, claim 1 is allowable in view of applicant's arguments submitted with the patented application (*See* Appl. No. 13/666,680, Remarks dated 06/01/2016, pp. 17-18). Specifically, the arguments regarding the difference between the prior arts of record and the feature of "comparing motion information of the first spatial motion vector prediction candidate with motion information of spatial motion vector prediction candidates in the determined subset of spatial motion vector prediction candidates without making a comparison of each pair from the set of spatial motion vector prediction candidates," as recited in claim 1 and similarly recited in the independent claims 9, 15, 23, 29 and 30.

Furthermore, none of the cited prior arts (See PTO-892) teach the above feature of the independent claims.

The rest of the dependent claims are allowed based on their dependency from allowed claims 1, 9, 15 and 23.

Any comments considered necessary by applicant must be submitted no later than the payment of the issue fee and, to avoid processing delays, should preferably accompany the issue fee. Such submissions should be clearly labeled "Comments on Statement of Reasons for Allowance."

***Conclusion***

Any inquiry concerning this communication or earlier communications from the examiner should be directed to NATHNAEL AYNALEM whose telephone number is (571)270-1482. The examiner can normally be reached on M-F 9AM-5:30 PM ET.

Examiner interviews are available via telephone, in-person, and video conferencing using a USPTO supplied web-based collaboration tool. To schedule an interview, applicant is encouraged to use the USPTO Automated Interview Request (AIR) at http://www.uspto.gov/interviewpractice.

If attempts to reach the examiner by telephone are unsuccessful, the examiner's supervisor, SATH PERUNGAVOOR can be reached on 571-272-7455. The fax phone number for the organization where this application or proceeding is assigned is 571-273-8300.

Information regarding the status of an application may be obtained from the Patent Application Information Retrieval (PAIR) system. Status information for published applications may be obtained from either Private PAIR or Public PAIR. Status information for unpublished applications is available through Private PAIR only. For more information about the PAIR system, see http://pair-direct.uspto.gov. Should you have questions on access to the Private PAIR system, contact the Electronic Business Center (EBC) at 866-217-9197 (toll-free). If you would

like assistance from a USPTO Customer Service Representative or access to the automated information system, call 800-786-9199 (IN USA OR CANADA) or 571-272-1000.

/NATHNAEL AYNALEM/
Primary Examiner, Art Unit 2488

| Notice of References Cited | Application/Control No. 16/356,733 | Applicant(s)/Patent Under Reexamination BICI et al. | |
|---|---|---|---|
| | Examiner NATHNAEL AYNALEM | Art Unit 2488 | Page 1 of 1 |

**U.S. PATENT DOCUMENTS**

| * | | Document Number Country Code-Number-Kind Code | Date MM-YYYY | Name | CPC Classification | US Classification |
|---|---|---|---|---|---|---|
| * | A | US-20110176013-A1 | 07-2011 | Robertson; Mark | H04N5/145 | 348/208.4 |
| * | B | US-20120230408-A1 | 09-2012 | Zhou; Minhua | H04N19/105 | 375/240.15 |
| * | C | US-20120257678-A1 | 10-2012 | Zhou; Minhua | H04N19/52 | 375/240.16 |
| * | D | US-20120269270-A1 | 10-2012 | Chen; Ying | H04N19/597 | 375/240.16 |
| * | E | US-20120300846-A1 | 11-2012 | SUGIO; Toshiyasu | H04N19/521 | 375/240.16 |
| * | F | US-20120320984-A1 | 12-2012 | Zhou; Minhua | H04N19/50 | 375/240.16 |
| * | G | US-20130003850-A1 | 01-2013 | SUGIO; Toshiyasu | H04N19/105 | 375/240.16 |
| * | H | US-20130004092-A1 | 01-2013 | SASAI; Hisao | H04N19/70 | 382/233 |
| * | I | US-20130070855-A1 | 03-2013 | Zheng; Yunfei | H04N19/105 | 375/240.16 |
| * | J | US-20130083853-A1 | 04-2013 | Coban; Muhammed Zeyd | H04N19/563 | 375/240.16 |
| * | K | US-20130272408-A1 | 10-2013 | CHEN; Ying | H04N19/597 | 375/240.16 |
| | L | | | | | |
| | M | | | | | |

**FOREIGN PATENT DOCUMENTS**

| * | | Document Number Country Code-Number-Kind Code | Date MM-YYYY | Country | Name | CPC Classification |
|---|---|---|---|---|---|---|
| | N | | | | | |
| | O | | | | | |
| | P | | | | | |
| | Q | | | | | |
| | R | | | | | |
| | S | | | | | |
| | T | | | | | |

**NON-PATENT DOCUMENTS**

| * | | Include as applicable: Author, Title Date, Publisher, Edition or Volume, Pertinent Pages) |
|---|---|---|
| | U | |
| | V | |
| | W | |
| | X | |

*A copy of this reference is not being furnished with this Office action. (See MPEP § 707.05(a).)
Dates in MM-YYYY format are publication dates. Classifications may be US or foreign.

| Search Notes | Application/Control No. | Applicant(s)/Patent Under Reexamination |
|---|---|---|
| | 16/356,733 | BICI et al. |
| | **Examiner** | **Art Unit** |
| | NATHNAEL AYNALEM | 2488 |

| CPC - Searched* | | |
|---|---|---|
| **Symbol** | **Date** | **Examiner** |
| H04N19/52 , H04N19/00684 , H04N19/00703 , H04N19/147 , H04N19/30 , H04N19/597 , H04N19/105 , H04N19/11 , H04N19/119 , H04N19/174 , H04N19/176 , H04N19/187 , H04N19/513 , H04N19/58 , H04N19/70 | 08/10/2019 | NA |

| CPC Combination Sets - Searched* | | |
|---|---|---|
| **Symbol** | **Date** | **Examiner** |
| | | |

| US Classification - Searched* | | | |
|---|---|---|---|
| **Class** | **Subclass** | **Date** | **Examiner** |
| 375 | 240.01-240.29 | 08/09/2019 | NA |

* See search history printout included with this form or the SEARCH NOTES box below to determine the scope of the search.

| Search Notes | | |
|---|---|---|
| **Search Notes** | **Date** | **Examiner** |
| Inventor's name search | 08/10/2019 | NA |
| Assignee search | 08/10/2019 | NA |
| East keyword search | 08/10/2019 | NA |
| NPL search on ip.com | 08/10/2019 | NA |

| Interference Search | | | |
|---|---|---|---|
| **US Class/CPC Symbol** | **US Subclass/CPC Group** | **Date** | **Examiner** |
| | Interference search of the claims (USPGPUB,USPAT) | 08/09/2019 | NA |


Amazon.com, Inc., Amazon.com Services LLC - Ex. 1002, Page 000122

| Issue Classification | Application/Control No. | Applicant(s)/Patent Under Reexamination |
|---|---|---|
| | 16/356,733 | BICI et al. |
| | **Examiner** | **Art Unit** |
| | NATHNAEL AYNALEM | 2488 |

| CPC | | | | | | |
|---|---|---|---|---|---|---|
| **Symbol** | | | | | **Type** | **Version** |
| H04N | / | 19 | / | 521 | F | 2014-11-01 |
| H04N | / | 19 | / | 52 | I | 2014-11-01 |
| H04N | / | 19 | / | 176 | A | 2014-11-01 |
| H04N | / | 19 | / | 182 | A | 2014-11-01 |

| CPC Combination Sets | | | | | | | | |
|---|---|---|---|---|---|---|---|---|
| **Symbol** | | | | | **Type** | **Set** | **Ranking** | **Version** |
| | / | | / | | | | | |

| | | | |
|---|---|---|---|
| NONE<br>(Assistant Examiner) | (Date) | **Total Claims Allowed:**<br>30 | |
| /NATHNAEL AYNALEM/<br>Primary Examiner, Art Unit 2488<br>(Primary Examiner) | 09 August 2019<br>(Date) | O.G. Print Claim(s)<br>1 | O.G. Print Figure<br>1 |

U.S. Patent and Trademark Office

Part of Paper No.: 20190808



Amazon.com, Inc., Amazon.com Services LLC - Ex. 1002, Page 000123

| Issue Classification | Application/Control No. | Applicant(s)/Patent Under Reexamination |
|---|---|---|
| | 16/356,733 | BICI et al. |
| | **Examiner** | **Art Unit** |
| | NATHNAEL AYNALEM | 2488 |

| INTERNATIONAL CLASSIFICATION | | | | |
|---|---|---|---|---|
| **CLAIMED** | | | | |
| H04N19/513 | / | 19 | / | 513 |
| H04N19/52 | / | 19 | / | 52 |
| H04N19/176 | / | 19 | / | 176 |
| H04N19/182 | / | 19 | / | 182 |

| NON-CLAIMED | | | | |
|---|---|---|---|---|
| | / | | / | |

| US ORIGINAL CLASSIFICATION | |
|---|---|
| **CLASS** | **SUBCLASS** |
| | |

| CROSS REFERENCES(S) | | | | | | |
|---|---|---|---|---|---|---|
| **CLASS** | **SUBCLASS (ONE SUBCLASS PER BLOCK)** | | | | | |
| | | | | | | |

| NONE<br>(Assistant Examiner) (Date) | | **Total Claims Allowed:**<br>30 | |
|---|---|---|---|
| /NATHNAEL AYNALEM/<br>Primary Examiner, Art Unit 2488<br>(Primary Examiner) | 09 August 2019<br>(Date) | O.G. Print Claim(s)<br>1 | O.G. Print Figure<br>1 |

U.S. Patent and Trademark Office Part of Paper No.: 20190808



Amazon.com, Inc., Amazon.com Services LLC - Ex. 1002, Page 000124

| Issue Classification | Application/Control No. | Applicant(s)/Patent Under Reexamination |
|---|---|---|
| | 16/356,733 | BICI et al. |
| | **Examiner** | **Art Unit** |
| | NATHNAEL AYNALEM | 2488 |

☑ Claims renumbered in the same order as presented by applicant ☐ CPA ☐ T.D. ☐ R.1.47

**CLAIMS**

| Final | Original | Final | Original | Final | Original | Final | Original | Final | Original | Final | Original | Final | Original | Final | Original |
|---|---|---|---|---|---|---|---|---|---|---|---|---|---|---|---|
| | | | | | | | | | | | | | | | |
| | | | | | | | | | | | | | | | |
| | | | | | | | | | | | | | | | |
| | | | | | | | | | | | | | | | |
| | | | | | | | | | | | | | | | |
| | | | | | | | | | | | | | | | |
| | | | | | | | | | | | | | | | |
| | | | | | | | | | | | | | | | |
| | | | | | | | | | | | | | | | |

| | | | |
|---|---|---|---|
| NONE<br>(Assistant Examiner) | (Date) | **Total Claims Allowed:**<br>30 | |
| /NATHNAEL AYNALEM/<br>Primary Examiner, Art Unit 2488<br>(Primary Examiner) | 09 August 2019<br>(Date) | O.G. Print Claim(s)<br>1 | O.G. Print Figure<br>1 |

U.S. Patent and Trademark Office

Part of Paper No.: 20190808



Amazon.com, Inc., Amazon.com Services LLC - Ex. 1002, Page 000125

Substitute for form SB08
(Revised 07/09)

# INFORMATION DISCLOSURE STATEMENT BY APPLICANT

*(Use as many sheets as necessary)*

| Complete if Known | |
|---|---|
| Application Number | 16/356,733 |
| Filing Date | March 18, 2019 |
| First Named Inventor | Bici et al. |
| Art Unit | 2488 |
| Examiner Name | S. V. Perungavoor |
| Attorney Docket Number | 042933/519745 |

| Sheet | 1 | of | 4 |
|---|---|---|---|

## U. S. PATENT DOCUMENTS

| Examiner Initials* | Cite No. | Document Number Number - Kind Code (if known) | Publication Date MM-DD-YYYY | Name of Patentee or Applicant of Cited Document | Pages, Columns, Lines, Where Relevant Passages of Relevant Figures Appear |
|---|---|---|---|---|---|
| | 1 | US-2004/0234144 A1 | 11-25-2004 | Sugimoto et al. | |
| | 2 | US-2007/0189389 A1 | 08-16-2007 | Boisson et al. | |
| | 3 | US-2008/0159401 A1 | 07-03-2008 | Lee et al. | |
| | 4 | US-2008/0232642 A1 | 09-25-2008 | Chang | |
| | 5 | US-2011/0170602 A1 | 07-14-2011 | Lee et al. | |
| | 6 | US-2011/0176013 A1 | 07-21-2011 | Robertson et al. | |
| | 7 | US-2011/0176612 A1 | 07-21-2011 | Tsai et al. | |
| | 8 | US-2011/0182362 A1 | 07-28-2011 | Kim et al. | |
| | 9 | US-2012/0230408 A1 | 09-13-2012 | Zhou | |
| | 10 | US-2012/0257678 A1 | 10-11-2012 | Zhou et al. | |
| | 11 | US-2012/0269270 A1 | 10-25-2012 | Chen et al. | |
| | 12 | US-2012/0300846 A1 | 11-29-2012 | Sugio et al. | |
| | 13 | US-2012/0307905 A1 | 12-06-2012 | Kim et al. | |
| | 14 | US-2012/0320984 A1 | 12-20-2012 | Zhou | |
| | 15 | US-2013/0003850 A1 | 01-03-2013 | Sugio et al. | |
| | 16 | US-2013/0004092 A1 | 01-03-2013 | Sasai et al. | |
| | 17 | US-2013/0070855 A1 | 03-21-2013 | Zheng et al. | |
| | 18 | US-2013/0083853 A1 | 04-04-2013 | Coban et al. | |
| | 19 | US-2013/0272408 A1 | 10-17-2013 | Chen et al. | |
| | | | | | |

## FOREIGN PATENT DOCUMENTS

| Examiner Initials | Cite No. | Foreign Patent Document Country Code - Number Kind Code (if known) | Publication Date MM-DD-YYYY | Name of Patentee or Applicant of Cited Document | Pages, Columns, Lines, Where Relevant Passages or Relevant Figures Appear | English Language Translation Attached |
|---|---|---|---|---|---|---|
| | 20 | CN 101271580 A | 09-24-2008 | HIMAX Tech Ltd | | |

| Examiner Signature | /NATHNAEL AYNALEM/ | Date Considered | 08/09/2019 |
|---|---|---|---|

*Examiner: Initial if reference considered, whether or not citation is in conformance with MPEP 609. Draw line through citation if not in conformance and not considered. Include copy of this form with next communication to applicant.

**Submitted June 17, 2019**

| Substitute for form SB08 (Revised 07/09) | Complete if Known | |
|---|---|---|
| **INFORMATION DISCLOSURE STATEMENT BY APPLICANT** *(Use as many sheets as necessary)* | Application Number | 16/356,733 |
| | Filing Date | March 18, 2019 |
| | First Named Inventor | Bici et al. |
| | Art Unit | 2488 |
| | Examiner Name | S. V. Perungavoor |
| Sheet 2 of 4 | Attorney Docket Number | 042933/519745 |

## FOREIGN PATENT DOCUMENTS

| Examiner Initials | Cite No. | Foreign Patent Document Country Code - Number Kind Code (if known) | Publication Date MM-DD-YYYY | Name of Patentee or Applicant of Cited Document | Pages, Columns, Lines, Where Relevant Passages or Relevant Figures Appear | English Language Translation Attached |
|---|---|---|---|---|---|---|
| | 21 | CN 101605255 B | 05-04-2011 | Huawei Tech Co Ltd | | |
| | 22 | CN 1757238 A | 04-05-2006 | Thomson Licensing | | |
| | 23 | WO 2011 115659 A1 | 09-22-2011 | Thomson Licensing | | |
| | 24 | WO 2011/062392 A2 | 05-26-2011 | SK Telecom Co. Ltd. | | |
| | | | | | | |

## OTHER DOCUMENTS

| Examiner Initials* | Cite No. | Include name of the author (in CAPITAL LETTERS), title of the article (when appropriate), title of the item (book, magazine, journal, serial, symposium, catalog, etc.), date, page(s), volume-issue number(s), publisher, city and/or country where published. | English Language Translation Attached |
|---|---|---|---|
| | 25 | Advisory Action for U.S. Patent Application No. 13/666,680 dated November 7, 2016, 4 pages. | |
| | 26 | **Bici, O. et al.**, *Non-CE13: Simplification of merge mode*, Joint Collaborative Team on Video Coding (JCT-VC) of ITU-T SG16 WP3 and ISO/IEC JTC1/SC29/WG11, 7th Meeting: Geneva, CH, 21-30 November, 2011, Document JCTVC-G593; URL: HTTP://WFTP3.ITU.INT/AV-ARCH/JCTVC-SITE/, 13 pages | |
| | 27 | **Bross, B. et al.**, *Core Experiment 9: MV Coding and Skip/Merge Operations*, Joint Collaborative Team on Video Coding (JCT-VC) of ITU-T SG16 WP3 and ISO/IEC JTC1/SC29/WG11, 6th Meeting, Torino, IT, 14-22 July, 2011; Document JCTVC-F909, 13 pages | |
| | 28 | **Bross, Benjamin, et al.**; *"WD4: Working Draft 4 of High-Efficiency Video Coding"*; Joint Collaborative Team on Video Coding (JCT-VC) of ITU-T SG16 WP3 and ISO/IEC JTC1/SC29/WG11; 6th Meeting; Torino, IT; 14-22 July 2011; Document JCTVC-F803_d; 232 pages | |
| | 29 | Extended European Search Report for corresponding European Application No. 12845839.5 dated March 21, 2016, 10 pages | |
| | 30 | Final Office Action for U.S. Patent Application No. 13/666,680 dated March 1, 2016, 35 pages. | |
| | 31 | **Han, Woo-Jin, et al.**; *"Improved Video Compression Efficiency Through Flexible Unit Representation and Corresponding Extension of Coding Tools"*; Circuits and Systems for Video Technology; IEEE Transactions on 20.12 (2010); 1709-1720 | |

| Examiner Signature | /NATHNAEL AYNALEM/ | Date Considered | 08/09/2019 |
|---|---|---|---|

*Examiner: Initial if reference considered, whether or not citation is in conformance with MPEP 609. Draw line through citation if not in conformance and not considered. Include copy of this form with next communication to applicant.

**Submitted June 17, 2019**

Substitute for form SB08
(Revised 07/09)

# INFORMATION DISCLOSURE STATEMENT BY APPLICANT

*(Use as many sheets as necessary)*

| Complete if Known | |
|---|---|
| Application Number | 16/356,733 |
| Filing Date | March 18, 2019 |
| First Named Inventor | Bici et al. |
| Art Unit | 2488 |
| Examiner Name | S. V. Perungavoor |
| Attorney Docket Number | 042933/519745 |

| Sheet | 3 | of | 4 |
|---|---|---|---|

## OTHER DOCUMENTS

| Examiner Initials* | Cite No. | Include name of the author (in CAPITAL LETTERS), title of the article (when appropriate), title of the item (book, magazine, journal, serial, symposium, catalog, etc.), date, page(s), volume-issue number(s), publisher, city and/or country where published. | English Language Translation Attached |
|---|---|---|---|
| | 32 | **Huang, Ai-Mei et al.**, *A multistage motion vector processing method for motion-compensated frame interpolation*, Image Processing, IEEE Transactions on 17.5 (2008) 694-708 | |
| | 33 | International Search Report and Written Opinion from corresponding International Application No. PCT/FI2012/051070, dated March 27, 2013 | |
| | 34 | **J.-L. Lin, Y.-W. Chen, Y.-W. Huang, S. Lei**; *"CE9: Results of Experiment ROB04"*; JCT-VC Doc. JCTVC-F052, Turin; Jul 2011 | |
| | 35 | **Jeon, Y. et al.**, *On MVP list pruning process*, Joint Collaborative Team on Video Coding (JCT-VC) of ITU-T SG16 WP3 and ISO/IEC JTC1/SC29/WG11, 6th Meeting, Torino, IT, 14-22 July, 2011, Document JCTVC-F105, 7 pages | |
| | 36 | **Nakamura, H. et al.**, *Unification of derivation process for merge mode and MVP*, Joint Collaborative Team on Video Coding (JCT-VC) of ITU-T SG16 WP3 and ISO/IEC JTC1/SC29/WG11, 6th Meeting; Torino, IT, 14-22 July, 2011; Document JCTVC-F419; URL: http://wftp3.itu.int/AV-ARCH/JCTVC-SITE/2011_07_F_Torino/, 10 pages | |
| | 37 | Notice of Allowance for U.S. Patent Application No. 13/666,680 dated September 30, 2016, 17 pages. | |
| | 38 | Notice of Allowance for U.S. Patent Application No. 15/426,822 dated March 10, 2017, 8 pages | |
| | 39 | Office Action for Canadian Application No. 2,854,495 dated September 6, 2016 | |
| | 40 | Office Action for Chinese Application No. 201280065777.5 dated October25, 2017 with English Translation, 8 pages | |
| | 41 | Office Action for Chinese Application No. 2012800657775 dated October 9, 2016 | |
| | 42 | Office Action for corresponding Indian Application No. 4092/CHENP/2014 dated April 11, 2018 with English Translation, 7 pages | |
| | 43 | Office Action for U.S. Patent Application No. 13/666,680 dated July 6, 2015, 25 pages. | |
| | 44 | Office Action for U.S. Patent Application No. 15/681,725 dated September 21, 2017 | |
| | 45 | Office Action from corresponding Canadian Patent Application No. 2,854,495, dated October 7, 2015 | |
| | 46 | Office Action from corresponding Korean Patent Application No. 2014-7015093, dated August 21, 2015 | |
| | 47 | Office Action from Korean Patent Application No. 2014-7015093 dated August 22, 2016 | |
| | 48 | **Oudin, S. et al.**; *"Block Merging for Quadtree-Based Video Coding"*; IEEE Int. Conf. on Multimedia and Expo; July 11-15; 2011; 6 pages | |

| Examiner Signature | /NATHNAEL AYNALEM/ | Date Considered | 08/09/2019 |
|---|---|---|---|

*Examiner: Initial if reference considered, whether or not citation is in conformance with MPEP 609. Draw line through citation if not in conformance and not considered. Include copy of this form with next communication to applicant.

**Submitted June 17, 2019**

| Substitute for form SB08 (Revised 07/09) | | | | Complete if Known | |
|---|---|---|---|---|---|
| **INFORMATION DISCLOSURE STATEMENT BY APPLICANT** *(Use as many sheets as necessary)* | | | | Application Number | 16/356,733 |
| | | | | Filing Date | March 18, 2019 |
| | | | | First Named Inventor | Bici et al. |
| | | | | Art Unit | 2488 |
| | | | | Examiner Name | S. V. Perungavoor |
| Sheet | 4 | of | 4 | Attorney Docket Number | 042933/519745 |

## OTHER DOCUMENTS

| Examiner Initials* | Cite No. | Include name of the author (in CAPITAL LETTERS), title of the article (when appropriate), title of the item (book, magazine, journal, serial, symposium, catalog, etc.), date, page(s), volume-issue number(s), publisher, city and/or country where published. | English Language Translation Attached |
|---|---|---|---|
| | 49 | **Sullivan, G.J.**; *"Overview of the High Efficiency Video Coding (HEVC) Standard"*; IEEE Trans. On Circuits and Systems for Video Technology; Vol. 22, No. 12; December 2012; pp. 1649-1668 | |
| | 50 | **Tai, Shen-Chuan, et al.**; *"A Multi-Pass True Motion Estimation Scheme with Motion Vector Propagation for Frame Rate Up-Conversion Applications"*; Journal of Display Technology; 4.2 (2008): 188-197 | |
| | 51 | Taiwanese Office Action and Search Report from Taiwanese Patent Application No. 101140777 dated December 2, 2015 | |
| | 52 | **Wiegand, Tomas, et al.**; *"WD3: Working Draft 3 of High-Efficiency Video Coding"*; Joint Collaborative Team on Video Coding (JCT-VC) of ITU-T SG16 WP3 and ISO/IEC JTC1/SC29/WG11; 5th Meeting; Geneva, CH, 16-23 March, 2011; Document JCTVC-E603; 239 pages | |
| | 53 | **Zheng, Y. et al.**, *Merge Candidate Selection in 2NxN, Nx2N, and NxN Mode*, Joint Collaborative Team on Video Coding (JCT-VC) of ITU-T SG16 WP3 and ISO/IEC JTC1/SC29/WG11, 6th Meeting, Torino, IT, 14-22 July, 2011; Document JCTVC-F302, 6 pages | |
| | 54 | Notice of Allowance for U.S. Application No. 15/681,725 dated May 30, 2018 | |
| | 55 | Notice of Allowance for U.S. Application No. 15/681,725 dated October 25, 2018 | |
| | 56 | Office Action for U.S. Application No. 13/666,680 dated March 1, 2016 | |
| | 57 | Office Action for European Application No. EP 12 845 839.5 dated June 6, 2019, 9 pages | |
| | | | |
| | | | |

| Examiner Signature | /NATHNAEL AYNALEM/ | Date Considered | 08/09/2019 |
|---|---|---|---|

*Examiner: Initial if reference considered, whether or not citation is in conformance with MPEP 609. Draw line through citation if not in conformance and not considered. Include copy of this form with next communication to applicant.

**Submitted June 17, 2019**

**EAST Search History**

**EAST Search History (Prior Art)**

| Ref # | Hits | Search Query | DBs | Default Operator | Plurals | Time Stamp |
|---|---|---|---|---|---|---|
| L1 | 63216 | (spatial or intra) with predict$3 | US-PGPUB; USPAT; USOCR; FPRS; EPO; JPO; DERWENT; IBM_TDB | OR | ON | 2019/08/10 12:14 |
| L2 | 12150 | (compar$3 or evaluat$3 or verif$7 or check$3 or examin$3 or comparison or match$3) with (predict$3 or candidate$1 or mv$1 or vector$1 or mvp$1 or imvc$1 or pmvc$1) with (subset$1 or sub adj1 set$1 or sub or limit$2) with (available or candidate$1) | US-PGPUB; USPAT; USOCR; FPRS; EPO; JPO; DERWENT; IBM_TDB | OR | ON | 2019/08/10 12:14 |
| L3 | 512 | L2 and L1 | US-PGPUB; USPAT; USOCR; FPRS; EPO; JPO; DERWENT; IBM_TDB | OR | ON | 2019/08/10 12:14 |
| L4 | 395 | L3 AND ( (H04N19/52 OR H04N19/00684 OR H04N19/00703 OR H04N19/147 OR H04N19/30 OR H04N19/597 OR H04N19/105 OR H04N19/11 OR H04N19/119 OR H04N19/174 OR H04N19/176 OR H04N19/187 OR H04N19/513 OR H04N19/58 OR H04N19/70).CPC. OR (375/240.01-240.29).CCLS. ) | US-PGPUB; USPAT; USOCR; FPRS; EPO; JPO; DERWENT; IBM_TDB | OR | ON | 2019/08/10 12:14 |
| L5 | 63647 | (spatial or intra or spatio) with predict$3 | US-PGPUB; USPAT; USOCR; FPRS; EPO; JPO; DERWENT; IBM_TDB | OR | ON | 2019/08/10 12:16 |
| L6 | 100 | 5 same 2 | US-PGPUB; USPAT; USOCR; FPRS; EPO; JPO; DERWENT; IBM_TDB | OR | ON | 2019/08/10 12:17 |
| L7 | 19498 | (select$3 or choos$3 or chos$2 or determin$3 or calculat$3 or elect$3 or pick$3 or decid$3) with (vector or mv or mvp$1 or mvc$1) with (spatial$2 or intra or spatio) | US-PGPUB; USPAT; USOCR; FPRS; EPO; JPO; DERWENT; IBM_TDB | OR | ON | 2019/08/10 12:17 |

| | | | | | | |
|---|---|---|---|---|---|---|
| L8 | 38 | 6 and 7 | US-PGPUB; USPAT; USOCR; FPRS; EPO; JPO; DERWENT; IBM_TDB | OR | ON | 2019/08/10 12:18 |
| L9 | 964122 | (includ$3 or add$3 or merg$3) with (list) | US-PGPUB; USPAT; USOCR; FPRS; EPO; JPO; DERWENT; IBM_TDB | OR | ON | 2019/08/10 12:19 |
| L10 | 19299 | (select$3 or choos$3 or chos$2 or determin$3 or calculat$3 or elect$3 or pick$3 or decid$3) with (vector or mv or mvp$1 or mvc$1) with (spatial$2 or intra) | US-PGPUB; USPAT; USOCR; FPRS; EPO; JPO; DERWENT; IBM_TDB | OR | ON | 2019/08/10 12:20 |
| L11 | 708 | 9 same 10 | US-PGPUB; USPAT; USOCR; FPRS; EPO; JPO; DERWENT; IBM_TDB | OR | ON | 2019/08/10 12:20 |
| L12 | 21431 | (select$3 or choos$3 or chos$2 or determin$3 or calculat$3 or elect$3 or pick$3 or decid$3) with (vector or mv or mvp$1 or mvc$1) with (candidate$1) | US-PGPUB; USPAT; USOCR; FPRS; EPO; JPO; DERWENT; IBM_TDB | OR | ON | 2019/08/10 12:20 |
| L13 | 959908 | (includ$3 or add$3) with (list) | US-PGPUB; USPAT; USOCR; FPRS; EPO; JPO; DERWENT; IBM_TDB | OR | ON | 2019/08/10 12:20 |
| L14 | 1992 | L12 same L13 | US-PGPUB; USPAT; USOCR; FPRS; EPO; JPO; DERWENT; IBM_TDB | OR | ON | 2019/08/10 12:20 |
| L15 | 218 | ((("BICI") near3 ("Mehmet")) OR (("LAINEMA") near3 ("Jani")) OR (("UGUR") near3 ("Kemal"))).INV. | US-PGPUB; USPAT; USOCR; EPO; JPO; DERWENT | OR | ON | 2019/08/10 12:20 |
| L16 | 47 | L14 and L15 | US-PGPUB; USPAT; USOCR; FPRS; EPO; JPO; DERWENT; IBM_TDB | OR | ON | 2019/08/10 12:20 |

| | | | | | | |
|---|---|---|---|---|---|---|
| L17 | 1930 | (select$3 or choos$3 or chos$2 or determin$3 or calculat$3 or elect$3 or pick$3 or decid$3) with (vector or mv or mvp$1 or mvc$1) with (candidate$1) with (spatial$2 or intra) | US-PGPUB; USPAT; USOCR; FPRS; EPO; JPO; DERWENT; IBM_TDB | OR | ON | 2019/08/10 12:20 |
| L18 | 411 | L17 same L13 | US-PGPUB; USPAT; USOCR; FPRS; EPO; JPO; DERWENT; IBM_TDB | OR | ON | 2019/08/10 12:20 |
| L19 | 16910 | (select$3 or choos$3 or chos$2 or determin$3 or calculat$3 or elect$3 or pick$3 or decid$3) with (vector or mv or mvp$1 or mvc$1) with (location or position or coordinate) with (block or macroblock or picture or frame) | US-PGPUB; USPAT; USOCR; FPRS; EPO; JPO; DERWENT; IBM_TDB | OR | ON | 2019/08/10 12:20 |
| L20 | 74 | L18 same L19 | US-PGPUB; USPAT; USOCR; FPRS; EPO; JPO; DERWENT; IBM_TDB | OR | ON | 2019/08/10 12:20 |
| L21 | 72 | L20 AND ( (H04N19/52 OR H04N19/00684 OR H04N19/00703 OR H04N19/147 OR H04N19/30 OR H04N19/597 OR H04N19/105 OR H04N19/11 OR H04N19/119 OR H04N19/174 OR H04N19/176 OR H04N19/187 OR H04N19/513 OR H04N19/58 OR H04N19/70).CPC. OR (375/240.01-240.29).CCLS. ) | US-PGPUB; USPAT; USOCR; FPRS; EPO; JPO; DERWENT; IBM_TDB | OR | ON | 2019/08/10 12:20 |
| L22 | 13 | (US-20130070855-$ or US-20130004092-$ or US-20130016782-$ or US-20130077689-$ or US-20120230408-$ or US-20120257678-$ or US-20120269270-$ or US-20120300846-$ or US-20110176013-$ or US-20130003850-$ or US-20120320984-$).did. or (US-9473787-$ or US-9635383-$).did. | US-PGPUB; USPAT | OR | ON | 2019/08/10 12:22 |
| L23 | 1 | L22 and L18 | US-PGPUB; USPAT; USOCR; FPRS; EPO; JPO; DERWENT; IBM_TDB | OR | ON | 2019/08/10 12:22 |
| L46 | 2413 | ((("NOKIA") near3 ("TECHNOLOGIES") near3 ("OY"))).AS,AANM. | USPAT | OR | ON | 2019/08/10 12:40 |
| L47 | 29744 | (select$3 or choos$3 or chos$2 or determin$3 or calculat$3 or elect$3 or pick$3 or decid$3) with (vector or mv or mvp$1 or mvc$1) with (list$3 or candidate$1) | US-PGPUB; USPAT; USOCR; FPRS; EPO; JPO; DERWENT; | OR | ON | 2019/08/10 12:40 |

| | | | | | | |
|---|---|---|---|---|---|---|
| | | | IBM_TDB | | | |
| L48 | 41402 | (compar$3 or evaluat$3 or verif$7 or check$3 or examin$3 or comparison or match$3) with (predict$3 or candidate$1 or mv$1 or vector$1 or mvp$1 or imvc$1 or pmvc$1 or motion$1) with (subset$1 or sub adj1 set$1 or sub or limit$2) | US-PGPUB; USPAT; USOCR; FPRS; EPO; JPO; DERWENT; IBM_TDB | OR | ON | 2019/08/10 12:40 |
| L49 | 2252 | L47 and L48 | US-PGPUB; USPAT; USOCR; FPRS; EPO; JPO; DERWENT; IBM_TDB | OR | ON | 2019/08/10 12:40 |
| L50 | 8 | L46 and L49 | US-PGPUB; USPAT; USOCR; FPRS; EPO; JPO; DERWENT; IBM_TDB | OR | ON | 2019/08/10 12:40 |

**EAST Search History (Interference)**

| Ref # | Hits | Search Query | DBs | Default Operator | Plurals | Time Stamp |
|---|---|---|---|---|---|---|
| L24 | 94725 | ((compar$3 or evaluat$3 or verif$7 or check$3 or search$3 or differenc$2 or examin$3 or comparison) with (predict$3 or candidate$1 or mv or vector$1)).clm. | US-PGPUB; USPAT | OR | ON | 2019/08/10 12:23 |
| L25 | 5544 | ((select$3 or choos$3 or chos$2 or determin$3 or calculat$3 or elect$3 or pick$3 or decid$3 or identify$3 or estimat$3 or recogni$5) with predict$3 with (list$3 or candidate$1)).clm. | US-PGPUB; USPAT | OR | ON | 2019/08/10 12:23 |
| L26 | 2243 | L24 and L25 | US-PGPUB; USPAT | OR | ON | 2019/08/10 12:23 |
| L27 | 2243 | L24 and L25 | US-PGPUB; USPAT | OR | ON | 2019/08/10 12:24 |
| L28 | 900 | (candidate$1 with list with (exclud$3 or without or eliminat$3 or remov$3)).clm. | US-PGPUB; USPAT | OR | ON | 2019/08/10 12:24 |
| L29 | 67 | L28 and L27 | US-PGPUB; USPAT | OR | ON | 2019/08/10 12:24 |
| L30 | 5113 | ((select$3 or choos$3 or chos$2 or determin$3 or calculat$3 or elect$3 or pick$3 or decid$3) with predict$3 with (list$3 or candidate$1)).clm. | US-PGPUB; USPAT | OR | ON | 2019/08/10 12:24 |
| L31 | 94725 | ((compar$3 or evaluat$3 or verif$7 or check$3 or search$3 or differenc$2 or examin$3 or comparison) with (predict$3 or candidate$1 or mv or vector$1)).clm. | US-PGPUB; USPAT | OR | ON | 2019/08/10 12:24 |
| L32 | 2070 | L30 and L31 | US-PGPUB; USPAT | OR | ON | 2019/08/10 12:24 |

| | | | | | | |
|---|---|---|---|---|---|---|
| L33 | 1440 | (candidat$1 with merg$3).clm. | US-PGPUB; USPAT | OR | ON | 2019/08/10 12:24 |
| L34 | 142 | L33 and L32 | US-PGPUB; USPAT | OR | ON | 2019/08/10 12:24 |
| L35 | 108139 | ((includ$3 or add$3 or merg$3) with list).clm. | US-PGPUB; USPAT | OR | ON | 2019/08/10 12:24 |
| L36 | 371 | ((select$3 or choos$3 or chos$2 or determin$3 or calculat$3 or elect$3 or pick$3 or decid$3) with (vector or mv or mvp$1 or mvc$1) with (candidate$1) with (spatial$2 or intra)).clm. | US-PGPUB; USPAT | OR | ON | 2019/08/10 12:24 |
| L37 | 94725 | ((compar$3 or evaluat$3 or verif$7 or check$3 or search$3 or differenc$2 or examin$3 or comparison) with (predict$3 or candidate$1 or mv or vector$1)).clm. | US-PGPUB; USPAT | OR | ON | 2019/08/10 12:24 |
| L38 | 86 | L35 same L36 | US-PGPUB; USPAT | OR | ON | 2019/08/10 12:24 |
| L39 | 40 | L37 and L38 | US-PGPUB; USPAT | OR | ON | 2019/08/10 12:24 |
| L40 | 40 | L37 and L38 | US-PGPUB; USPAT | OR | ON | 2019/08/10 12:24 |
| L41 | 128323 | ((transmit$4 or transmission or send$3 or signaling or signaled or output$4) with (predict$3 or mv or vector or candidate or list or merg$3)).clm. | US-PGPUB; USPAT | OR | ON | 2019/08/10 12:24 |
| L42 | 9 | L41 and L40 | US-PGPUB; USPAT | OR | ON | 2019/08/10 12:24 |
| L43 | 1135 | ((compar$3 or evaluat$3 or verif$7 or check$3 or search$3 or differenc$2 or examin$3) with predict$3 with candidat$1).clm. | US-PGPUB; USPAT | OR | ON | 2019/08/10 12:40 |
| L44 | 900 | (candidate$1 with list with (exclud$3 or without or eliminat$3 or remov$3)).clm. | US-PGPUB; USPAT | OR | ON | 2019/08/10 12:40 |
| L45 | 40 | L43 and L44 | US-PGPUB; USPAT | OR | ON | 2019/08/10 12:40 |

**8/10/2019 12:42:15 PM**
**C:\Users\naynalem\Documents\EAST\Workspaces\13666680.wsp**

Complete Main Concept Text
==========
selecting a first spatial motion vector prediction candidate from a set of spatial motion vector prediction candidates for a block of pixels as a potential spatial motion vector prediction candidate to be included in a motion vector prediction list for a prediction unit of the block of pixels, where the motion vector prediction list comprises motion information of the spatial motion vector prediction candidates and is utilized to identify motion vector prediction candidates of which one spatial motion vector prediction candidate from the motion vector prediction list is signaled as the motion information for the prediction unit; determining a subset of spatial motion vector prediction candidates based on a location of the block associated with the first spatial motion vector prediction candidate; comparing motion information of the first spatial motion vector prediction candidate with motion information of spatial motion vector prediction candidates in the determined subset of spatial motion vector prediction candidates without making a comparison of each pair from the set of spatial motion vector prediction candidates; determining to include or exclude the first spatial motion vector prediction candiate in the motion vector prediction list based on the comparing

(No Concept Modifiers)
==========

(No Filters)
==========

Options
==========
De-dup: None
Cut-off: None
Sort: Relevance

Collections (25)
==========
IEEE Xplore Publications: IEEE Periodicals
IEEE Xplore Publications: IEEE Conferences
IEEE Xplore Publications: IEEE Standards
IEEE Xplore Publications: IEEE Early Access
IEEE Xplore Publications: IET Periodicals
IEEE Xplore Publications: IET Conferences
IEEE Xplore Publications: SMPTE Periodicals
IEEE Xplore Publications: SMPTE Conferences
IEEE Xplore Publications: SMPTE Standards
IEEE Xplore Publications: MIT Press eBooks

IEEE Xplore Publications: Wiley-IEEE eBooks
IEEE Xplore Publications: IBM Periodicals
IEEE Xplore Publications: URSI Periodicals
IEEE Xplore Publications: VDE Conferences
IEEE Xplore Publications: Periodicals from China
IP.com Prior Art Database: The IP.com Journal
IP.com Prior Art Database: Internet Society RFC
IP.com Prior Art Database: IBM TDB Archive
IP.com Prior Art Database: Legacy Journals
IP.com Prior Art Database: Software Patent Institute
OnePetro.org: Periodicals at OnePetro.org
OnePetro.org: Conferences at OnePetro.org
OnePetro.org: Standards at OnePetro.org
Other Literature: IBM Redbooks
Other Literature: PubMed Central



Amazon.com, Inc., Amazon.com Services LLC - Ex. 1002, Page 000136

# Bibliographic Data

Application No: 16/356,733

Foreign Priority claimed: ○ Yes ◉ No

35 USC 119 (a-d) conditions met: ☐ Yes ☐ No ☐ Met After Allowance

Verified and Acknowledged: /NATHNAEL AYNALEM/ [ ]

Examiner's Signature Initials

Title: METHOD FOR CODING AND AN APPARATUS

---

| FILING or 371(c) DATE | CLASS | GROUP ART UNIT | ATTORNEY DOCKET NO. |
|---|---|---|---|
| 03/18/2019 | 375 | 2488 | 042933/519745 |
| **RULE** | | | |

**APPLICANTS**

NOKIA TECHNOLOGIES OY, Espoo, FINLAND

**INVENTORS**

Mehmet Oguz BICI Tampere, FINLAND

Jani LAINEMA Tampere, FINLAND

Kemal UGUR Tampere, FINLAND

**CONTINUING DATA**

This application is a CON of 15681725 08/21/2017 PAT 10237574

15681725 is a CON of 15426822 02/07/2017 PAT 9743105

15426822 is a CON of 13666680 11/01/2012 PAT 9571833

13666680 has PRO of 61555703 11/04/2011

**FOREIGN APPLICATIONS**

**IF REQUIRED, FOREIGN LICENSE GRANTED****

04/03/2019

**STATE OR COUNTRY**

FINLAND

**ADDRESS**

Nokia Corporation and Alston & Bird LLP
c/o Alston & Bird LLP
Bank of America Plaza, 101 South Tryon Street
Suite 4000
Charlotte, NC 28280-4000
UNITED STATES

**FILING FEE RECEIVED**

$4,100

Substitute for form SB08
(Revised 07/09)

# INFORMATION DISCLOSURE STATEMENT BY APPLICANT

*(Use as many sheets as necessary)*

| Complete if Known | |
|---|---|
| Application Number | 16/356,733 |
| Filing Date | March 18, 2019 |
| First Named Inventor | Bici et al. |
| Art Unit | 2488 |
| Examiner Name | S. V. Perungavoor |
| Attorney Docket Number | 042933/519745 |

Sheet 1 of 4

## U. S. PATENT DOCUMENTS

| Examiner Initials* | Cite No. | Document Number Number - Kind Code (if known) | Publication Date MM-DD-YYYY | Name of Patentee or Applicant of Cited Document | Pages, Columns, Lines, Where Relevant Passages of Relevant Figures Appear |
|---|---|---|---|---|---|
| | 1 | US-2004/0234144 A1 | 11-25-2004 | Sugimoto et al. | |
| | 2 | US-2007/0189389 A1 | 08-16-2007 | Boisson et al. | |
| | 3 | US-2008/0159401 A1 | 07-03-2008 | Lee et al. | |
| | 4 | US-2008/0232642 A1 | 09-25-2008 | Chang | |
| | 5 | US-2011/0170602 A1 | 07-14-2011 | Lee et al. | |
| | 6 | US-2011/0176013 A1 | 07-21-2011 | Robertson et al. | |
| | 7 | US-2011/0176612 A1 | 07-21-2011 | Tsai et al. | |
| | 8 | US-2011/0182362 A1 | 07-28-2011 | Kim et al. | |
| | 9 | US-2012/0230408 A1 | 09-13-2012 | Zhou | |
| | 10 | US-2012/0257678 A1 | 10-11-2012 | Zhou et al. | |
| | 11 | US-2012/0269270 A1 | 10-25-2012 | Chen et al. | |
| | 12 | US-2012/0300846 A1 | 11-29-2012 | Sugio et al. | |
| | 13 | US-2012/0307905 A1 | 12-06-2012 | Kim et al. | |
| | 14 | US-2012/0320984 A1 | 12-20-2012 | Zhou | |
| | 15 | US-2013/0003850 A1 | 01-03-2013 | Sugio et al. | |
| | 16 | US-2013/0004092 A1 | 01-03-2013 | Sasai et al. | |
| | 17 | US-2013/0070855 A1 | 03-21-2013 | Zheng et al. | |
| | 18 | US-2013/0083853 A1 | 04-04-2013 | Coban et al. | |
| | 19 | US-2013/0272408 A1 | 10-17-2013 | Chen et al. | |
| | | | | | |

## FOREIGN PATENT DOCUMENTS

| Examiner Initials | Cite No. | Foreign Patent Document Country Code - Number Kind Code (if known) | Publication Date MM-DD-YYYY | Name of Patentee or Applicant of Cited Document | Pages, Columns, Lines, Where Relevant Passages or Relevant Figures Appear | English Language Translation Attached |
|---|---|---|---|---|---|---|
| | 20 | CN 101271580 A | 09-24-2008 | HIMAX Tech Ltd | | |

| Examiner Signature | /NATHNAEL AYNALEM/ | Date Considered | 08/09/2019 |
|---|---|---|---|

*Examiner: Initial if reference considered, whether or not citation is in conformance with MPEP 609. Draw line through citation if not in conformance and not considered. Include copy of this form with next communication to applicant.

**Submitted June 17, 2019**

ALL REFERENCES CONSIDERED EXCEPT WHERE LINED THROUGH. /N.A./

Substitute for form SB08
(Revised 07/09)

# INFORMATION DISCLOSURE STATEMENT BY APPLICANT

*(Use as many sheets as necessary)*

| Complete if Known | |
|---|---|
| Application Number | 16/356,733 |
| Filing Date | March 18, 2019 |
| First Named Inventor | Bici et al. |
| Art Unit | 2488 |
| Examiner Name | S. V. Perungavoor |
| Attorney Docket Number | 042933/519745 |

| Sheet | 2 | of | 4 |
|---|---|---|---|

## FOREIGN PATENT DOCUMENTS

| Examiner Initials | Cite No. | Foreign Patent Document Country Code - Number Kind Code (if known) | Publication Date MM-DD-YYYY | Name of Patentee or Applicant of Cited Document | Pages, Columns, Lines, Where Relevant Passages or Relevant Figures Appear | English Language Translation Attached |
|---|---|---|---|---|---|---|
| | 21 | CN 101605255 B | 05-04-2011 | Huawei Tech Co Ltd | | |
| | 22 | CN 1757238 A | 04-05-2006 | Thomson Licensing | | |
| | 23 | WO 2011 115659 A1 | 09-22-2011 | Thomson Licensing | | |
| | 24 | WO 2011/062392 A2 | 05-26-2011 | SK Telecom Co. Ltd. | | |
| | | | | | | |

## OTHER DOCUMENTS

| Examiner Initials* | Cite No. | Include name of the author (in CAPITAL LETTERS), title of the article (when appropriate), title of the item (book, magazine, journal, serial, symposium, catalog, etc.), date, page(s), volume-issue number(s), publisher, city and/or country where published. | English Language Translation Attached |
|---|---|---|---|
| | 25 | Advisory Action for U.S. Patent Application No. 13/666,680 dated November 7, 2016, 4 pages. | |
| | 26 | **Bici, O. et al.**, *Non-CE13: Simplification of merge mode*, Joint Collaborative Team on Video Coding (JCT-VC) of ITU-T SG16 WP3 and ISO/IEC JTC1/SC29/WG11, 7th Meeting: Geneva, CH, 21-30 November, 2011, Document JCTVC-G593; URL: HTTP://WFTP3.ITU.INT/AV-ARCH/JCTVC-SITE/, 13 pages | |
| | 27 | **Bross, B. et al.**, *Core Experiment 9: MV Coding and Skip/Merge Operations*, Joint Collaborative Team on Video Coding (JCT-VC) of ITU-T SG16 WP3 and ISO/IEC JTC1/SC29/WG11, 6th Meeting, Torino, IT, 14-22 July, 2011; Document JCTVC-F909, 13 pages | |
| | 28 | **Bross, Benjamin, et al.**; *"WD4: Working Draft 4 of High-Efficiency Video Coding"*; Joint Collaborative Team on Video Coding (JCT-VC) of ITU-T SG16 WP3 and ISO/IEC JTC1/SC29/WG11; 6th Meeting; Torino, IT; 14-22 July 2011; Document JCTVC-F803_d; 232 pages | |
| | 29 | Extended European Search Report for corresponding European Application No. 12845839.5 dated March 21, 2016, 10 pages | |
| | 30 | Final Office Action for U.S. Patent Application No. 13/666,680 dated March 1, 2016, 35 pages. | |
| | 31 | **Han, Woo-Jin, et al.**; *"Improved Video Compression Efficiency Through Flexible Unit Representation and Corresponding Extension of Coding Tools"*; Circuits and Systems for Video Technology; IEEE Transactions on 20.12 (2010); 1709-1720 | |

| Examiner Signature | /NATHNAEL AYNALEM/ | Date Considered | 08/09/2019 |
|---|---|---|---|

*Examiner: Initial if reference considered, whether or not citation is in conformance with MPEP 609. Draw line through citation if not in conformance and not considered. Include copy of this form with next communication to applicant.

**Submitted June 17, 2019**

ALL REFERENCES CONSIDERED EXCEPT WHERE LINED THROUGH. /N.A./

Substitute for form SB08
(Revised 07/09)

# INFORMATION DISCLOSURE STATEMENT BY APPLICANT

*(Use as many sheets as necessary)*

| Complete if Known | |
|---|---|
| Application Number | 16/356,733 |
| Filing Date | March 18, 2019 |
| First Named Inventor | Bici et al. |
| Art Unit | 2488 |
| Examiner Name | S. V. Perungavoor |
| Attorney Docket Number | 042933/519745 |

| Sheet | 3 | of | 4 |
|---|---|---|---|

## OTHER DOCUMENTS

| Examiner Initials* | Cite No. | Include name of the author (in CAPITAL LETTERS), title of the article (when appropriate), title of the item (book, magazine, journal, serial, symposium, catalog, etc.), date, page(s), volume-issue number(s), publisher, city and/or country where published. | English Language Translation Attached |
|---|---|---|---|
| | 32 | **Huang, Ai-Mei et al.**, *A multistage motion vector processing method for motion-compensated frame interpolation*, Image Processing, IEEE Transactions on 17.5 (2008) 694-708 | |
| | 33 | International Search Report and Written Opinion from corresponding International Application No. PCT/FI2012/051070, dated March 27, 2013 | |
| | 34 | **J.-L. Lin, Y.-W. Chen, Y.-W. Huang, S. Lei**; *"CE9: Results of Experiment ROB04"*; JCT-VC Doc. JCTVC-F052, Turin; Jul 2011 | |
| | 35 | **Jeon, Y. et al.**, *On MVP list pruning process*, Joint Collaborative Team on Video Coding (JCT-VC) of ITU-T SG16 WP3 and ISO/IEC JTC1/SC29/WG11, 6th Meeting, Torino, IT, 14-22 July, 2011, Document JCTVC-F105, 7 pages | |
| | 36 | **Nakamura, H. et al.**, *Unification of derivation process for merge mode and MVP*, Joint Collaborative Team on Video Coding (JCT-VC) of ITU-T SG16 WP3 and ISO/IEC JTC1/SC29/WG11, 6th Meeting; Torino, IT, 14-22 July, 2011; Document JCTVC-F419; URL: http://wftp3.itu.int/AV-ARCH/JCTVC-SITE/2011_07_F_Torino/, 10 pages | |
| | 37 | Notice of Allowance for U.S. Patent Application No. 13/666,680 dated September 30, 2016, 17 pages. | |
| | 38 | Notice of Allowance for U.S. Patent Application No. 15/426,822 dated March 10, 2017, 8 pages | |
| | 39 | Office Action for Canadian Application No. 2,854,495 dated September 6, 2016 | |
| | 40 | Office Action for Chinese Application No. 201280065777.5 dated October25, 2017 with English Translation, 8 pages | |
| | 41 | Office Action for Chinese Application No. 2012800657775 dated October 9, 2016 | |
| | 42 | Office Action for corresponding Indian Application No. 4092/CHENP/2014 dated April 11, 2018 with English Translation, 7 pages | |
| | 43 | Office Action for U.S. Patent Application No. 13/666,680 dated July 6, 2015, 25 pages. | |
| | 44 | Office Action for U.S. Patent Application No. 15/681,725 dated September 21, 2017 | |
| | 45 | Office Action from corresponding Canadian Patent Application No. 2,854,495, dated October 7, 2015 | |
| | 46 | Office Action from corresponding Korean Patent Application No. 2014-7015093, dated August 21, 2015 | |
| | 47 | Office Action from Korean Patent Application No. 2014-7015093 dated August 22, 2016 | |
| | 48 | **Oudin, S. et al.**; *"Block Merging for Quadtree-Based Video Coding"*; IEEE Int. Conf. on Multimedia and Expo; July 11-15; 2011; 6 pages | |

| Examiner Signature | /NATHNAEL AYNALEM/ | Date Considered | 08/09/2019 |
|---|---|---|---|

*Examiner: Initial if reference considered, whether or not citation is in conformance with MPEP 609. Draw line through citation if not in conformance and not considered. Include copy of this form with next communication to applicant.

**Submitted June 17, 2019**

ALL REFERENCES CONSIDERED EXCEPT WHERE LINED THROUGH. /N.A./

Substitute for form SB08
(Revised 07/09)

# INFORMATION DISCLOSURE STATEMENT BY APPLICANT

*(Use as many sheets as necessary)*

| Complete if Known | |
|---|---|
| Application Number | 16/356,733 |
| Filing Date | March 18, 2019 |
| First Named Inventor | Bici et al. |
| Art Unit | 2488 |
| Examiner Name | S. V. Perungavoor |
| Attorney Docket Number | 042933/519745 |

| Sheet | 4 | of | 4 |
|---|---|---|---|

## OTHER DOCUMENTS

| Examiner Initials* | Cite No. | Include name of the author (in CAPITAL LETTERS), title of the article (when appropriate), title of the item (book, magazine, journal, serial, symposium, catalog, etc.), date, page(s), volume-issue number(s), publisher, city and/or country where published. | English Language Translation Attached |
|---|---|---|---|
| | 49 | **Sullivan, G.J.**; *"Overview of the High Efficiency Video Coding (HEVC) Standard"*; IEEE Trans. On Circuits and Systems for Video Technology; Vol. 22, No. 12; December 2012; pp. 1649-1668 | |
| | 50 | **Tai, Shen-Chuan, et al.**; *"A Multi-Pass True Motion Estimation Scheme with Motion Vector Propagation for Frame Rate Up-Conversion Applications"*; Journal of Display Technology; 4.2 (2008): 188-197 | |
| | 51 | Taiwanese Office Action and Search Report from Taiwanese Patent Application No. 101140777 dated December 2, 2015 | |
| | 52 | **Wiegand, Tomas, et al.**; *"WD3: Working Draft 3 of High-Efficiency Video Coding"*; Joint Collaborative Team on Video Coding (JCT-VC) of ITU-T SG16 WP3 and ISO/IEC JTC1/SC29/WG11; 5th Meeting; Geneva, CH, 16-23 March, 2011; Document JCTVC-E603; 239 pages | |
| | 53 | **Zheng, Y. et al.**, *Merge Candidate Selection in 2NxN, Nx2N, and NxN Mode*, Joint Collaborative Team on Video Coding (JCT-VC) of ITU-T SG16 WP3 and ISO/IEC JTC1/SC29/WG11, 6th Meeting, Torino, IT, 14-22 July, 2011; Document JCTVC-F302, 6 pages | |
| | 54 | Notice of Allowance for U.S. Application No. 15/681,725 dated May 30, 2018 | |
| | 55 | Notice of Allowance for U.S. Application No. 15/681,725 dated October 25, 2018 | |
| | 56 | Office Action for U.S. Application No. 13/666,680 dated March 1, 2016 | |
| | 57 | Office Action for European Application No. EP 12 845 839.5 dated June 6, 2019, 9 pages | |
| | | | |
| | | | |

| Examiner Signature | /NATHNAEL AYNALEM/ | Date Considered | 08/09/2019 |
|---|---|---|---|

*Examiner: Initial if reference considered, whether or not citation is in conformance with MPEP 609. Draw line through citation if not in conformance and not considered. Include copy of this form with next communication to applicant.

**Submitted June 17, 2019**

LEGAL02/39034865v1

ALL REFERENCES CONSIDERED EXCEPT WHERE LINED THROUGH. /N.A./

## PART B - FEE(S) TRANSMITTAL

Complete and send this form, together with applicable fee(s), by mail or fax, or via EFS-Web.

By mail, send to: Mail Stop ISSUE FEE
Commissioner for Patents
P.O. Box 1450
Alexandria, Virginia 22313-1450

By fax, send to: (571)-273-2885

INSTRUCTIONS: This form should be used for transmitting the ISSUE FEE and PUBLICATION FEE (if required). Blocks 1 through 5 should be completed where appropriate. All further correspondence including the Patent, advance orders and notification of maintenance fees will be mailed to the current correspondence address as indicated unless corrected below or directed otherwise in Block 1, by (a) specifying a new correspondence address, and/or (b) indicating a separate "FEE ADDRESS" for maintenance fee notifications.

CURRENT CORRESPONDENCE ADDRESS (Note: Use Block 1 for any change of address)

10949 7590 08/30/2019
Nokia Corporation and Alston & Bird LLP
c/o Alston & Bird LLP
Bank of America Plaza, 101 South Tryon Street
Suite 4000
Charlotte, NC 28280-4000

Note: A certificate of mailing can only be used for domestic mailings of the Fee(s) Transmittal. This certificate cannot be used for any other accompanying papers. Each additional paper, such as an assignment or formal drawing, must have its own certificate of mailing or transmission.

**Certificate of Mailing or Transmission**

I hereby certify that this Fee(s) Transmittal is being deposited with the United States Postal Service with sufficient postage for first class mail in an envelope addressed to the Mail Stop ISSUE FEE address above, or being transmitted to the USPTO via EFS-Web or by facsimile to (571) 273-2885, on the date below.

(Typed or printed name)

(Signature)

(Date)

| APPLICATION NO. | FILING DATE | FIRST NAMED INVENTOR | ATTORNEY DOCKET NO. | CONFIRMATION NO. |
|---|---|---|---|---|
| 16/356,733 | 03/18/2019 | Mehmet Oguz BICI | 042933/519745 | 3483 |

TITLE OF INVENTION: METHOD FOR CODING AND AN APPARATUS

| APPLN. TYPE | ENTITY STATUS | ISSUE FEE DUE | PUBLICATION FEE DUE | PREV. PAID ISSUE FEE | TOTAL FEE(S) DUE | DATE DUE |
|---|---|---|---|---|---|---|
| nonprovisional | UNDISCOUNTED | $1000 | $0.00 | $0.00 | $1000 | 12/02/2019 |

| EXAMINER | ART UNIT | CLASS-SUBCLASS |
|---|---|---|
| AYNALEM, NATHNAEL B | 2488 | 375-240160 |

1. Change of correspondence address or indication of "Fee Address" (37 CFR 1.363).

☐ Change of correspondence address (or Change of Correspondence Address form PTO/SB/122) attached.

☐ "Fee Address" indication (or "Fee Address" Indication form PTO/SB/47; Rev 03-09 or more recent) attached. **Use of a Customer Number is required.**

2. For printing on the patent front page, list
(1) The names of up to 3 registered patent attorneys or agents OR, alternatively,
(2) The name of a single firm (having as a member a registered attorney or agent) and the names of up to 2 registered patent attorneys or agents. If no name is listed, no name will be printed.

1 Alston & Bird LLP
2
3

3. ASSIGNEE NAME AND RESIDENCE DATA TO BE PRINTED ON THE PATENT (print or type)

PLEASE NOTE: Unless an assignee is identified below, no assignee data will appear on the patent. If an assignee is identified below, the document must have been previously recorded, or filed for recordation, as set forth in 37 CFR 3.11 and 37 CFR 3.81(a). Completion of this form is NOT a substitute for filing an assignment.

(A) NAME OF ASSIGNEE: Nokia Technologies Oy

(B) RESIDENCE: (CITY and STATE OR COUNTRY): Espoo, Finland

Please check the appropriate assignee category or categories (will not be printed on the patent) : ☐ Individual ☒ Corporation or other private group entity ☐ Government

4a. Fees submitted: ☒ Issue Fee ☐ Publication Fee (if required) ☐ Advance Order - # of Copies

4b. Method of Payment: *(Please first reapply any previously paid fee shown above)*

☒ Electronic Payment via EFS-Web ☐ Enclosed check ☐ Non-electronic payment by credit card (Attach form PTO-2038)

☒ The Director is hereby authorized to charge the required fee(s), any deficiency, or credit any overpayment to Deposit Account No. 16-0605

5. **Change in Entity Status** (from status indicated above)

☐ Applicant certifying micro entity status. See 37 CFR 1.29

☐ Applicant asserting small entity status. See 37 CFR 1.27

☐ Applicant changing to regular undiscounted fee status.

NOTE: Absent a valid certification of Micro Entity Status (see forms PTO/SB/15A and 15B), issue fee payment in the micro entity amount will not be accepted at the risk of application abandonment.
NOTE: If the application was previously under micro entity status, checking this box will be taken to be a notification of loss of entitlement to micro entity status.
NOTE: Checking this box will be taken to be a notification of loss of entitlement to small or micro entity status, as applicable.

NOTE: This form must be signed in accordance with 37 CFR 1.31 and 1.33. See 37 CFR 1.4 for signature requirements and certifications.

Authorized Signature /Guy R. Gosnell/ Date November 27, 2019

Typed or printed name Guy R. Gosnell Registration No. 34,610





Amazon.com, Inc., Amazon.com Services LLC - Ex. 1002, Page 000143

# Electronic Patent Application Fee Transmittal

| | |
|---|---|
| **Application Number:** | 16356733 |
| **Filing Date:** | 18-Mar-2019 |
| **Title of Invention:** | METHOD FOR CODING AND AN APPARATUS |
| **First Named Inventor/Applicant Name:** | Mehmet Oguz BICI |
| **Filer:** | Guy Randall Gosnell/Joyce Smith |
| **Attorney Docket Number:** | 042933/519745 |

Filed as Large Entity

**Filing Fees for Utility under 35 USC 111(a)**

| Description | Fee Code | Quantity | Amount | Sub-Total in USD($) |
|---|---|---|---|---|
| **Basic Filing:** | | | | |
| **Pages:** | | | | |
| **Claims:** | | | | |
| **Miscellaneous-Filing:** | | | | |
| **Petition:** | | | | |
| **Patent-Appeals-and-Interference:** | | | | |
| **Post-Allowance-and-Post-Issuance:** | | | | |
| UTILITY APPL ISSUE FEE | 1501 | 1 | 1000 | 1000 |

| Description | Fee Code | Quantity | Amount | Sub-Total in USD($) |
|---|---|---|---|---|
| **Extension-of-Time:** | | | | |
| **Miscellaneous:** | | | | |
| | | | **Total in USD ($)** | **1000** |

# Electronic Acknowledgement Receipt

| | |
|---|---|
| **EFS ID:** | 37877836 |
| **Application Number:** | 16356733 |
| **International Application Number:** | |
| **Confirmation Number:** | 3483 |
| **Title of Invention:** | METHOD FOR CODING AND AN APPARATUS |
| **First Named Inventor/Applicant Name:** | Mehmet Oguz BICI |
| **Customer Number:** | 10949 |
| **Filer:** | Guy Randall Gosnell/Joyce Smith |
| **Filer Authorized By:** | Guy Randall Gosnell |
| **Attorney Docket Number:** | 042933/519745 |
| **Receipt Date:** | 27-NOV-2019 |
| **Filing Date:** | 18-MAR-2019 |
| **Time Stamp:** | 12:23:45 |
| **Application Type:** | Utility under 35 USC 111(a) |

## Payment information:

| | |
|---|---|
| Submitted with Payment | yes |
| Payment Type | DA |
| Payment was successfully received in RAM | $1000 |
| RAM confirmation Number | E2019AQC24085136 |
| Deposit Account | |
| Authorized User | |

The Director of the USPTO is hereby authorized to charge indicated fees and credit any overpayment as follows:

## File Listing:

| Document Number | Document Description | File Name | File Size(Bytes)/ Message Digest | Multi Part /.zip | Pages (if appl.) |
|---|---|---|---|---|---|
| 1 | Issue Fee Payment (PTO-85B) | ISSUEFEE519745.PDF | 111658<br>fcc2e1b480a6bd44c46e301b4797f5263aec1cba | no | 1 |
| **Warnings:** | | | | | |
| **Information:** | | | | | |
| 2 | Fee Worksheet (SB06) | fee-info.pdf | 30453<br>47aa112aa308642ebf4cc3d03125ce4f6b5c8562 | no | 2 |
| **Warnings:** | | | | | |
| **Information:** | | | | | |
| | | **Total Files Size (in bytes):** | 142111 | | |

**This Acknowledgement Receipt evidences receipt on the noted date by the USPTO of the indicated documents, characterized by the applicant, and including page counts, where applicable. It serves as evidence of receipt similar to a Post Card, as described in MPEP 503.**

**New Applications Under 35 U.S.C. 111**
**If a new application is being filed and the application includes the necessary components for a filing date (see 37 CFR 1.53(b)-(d) and MPEP 506), a Filing Receipt (37 CFR 1.54) will be issued in due course and the date shown on this Acknowledgement Receipt will establish the filing date of the application.**
**National Stage of an International Application under 35 U.S.C. 371**
**If a timely submission to enter the national stage of an international application is compliant with the conditions of 35 U.S.C. 371 and other applicable requirements a Form PCT/DO/EO/903 indicating acceptance of the application as a national stage submission under 35 U.S.C. 371 will be issued in addition to the Filing Receipt, in due course.**
**New International Application Filed with the USPTO as a Receiving Office**
**If a new international application is being filed and the international application includes the necessary components for an international filing date (see PCT Article 11 and MPEP 1810), a Notification of the International Application Number and of the International Filing Date (Form PCT/RO/105) will be issued in due course, subject to prescriptions concerning national security, and the date shown on this Acknowledgement Receipt will establish the international filing date of the application.**

UNITED STATES PATENT AND TRADEMARK OFFICE

UNITED STATES DEPARTMENT OF COMMERCE
United States Patent and Trademark Office
Address: COMMISSIONER FOR PATENTS
P.O. Box 1450
Alexandria, Virginia 22313-1450
www.uspto.gov

| APPLICATION NO. | ISSUE DATE | PATENT NO. | ATTORNEY DOCKET NO. | CONFIRMATION NO. |
|---|---|---|---|---|
| 16/356,733 | 01/14/2020 | 10536714 | 042933/519745 | 3483 |

10949 7590 12/24/2019

Nokia Corporation and Alston & Bird LLP
c/o Alston & Bird LLP
Bank of America Plaza, 101 South Tryon Street
Suite 4000
Charlotte, NC 28280-4000

# ISSUE NOTIFICATION

The projected patent number and issue date are specified above.

**Determination of Patent Term Adjustment under 35 U.S.C. 154 (b)**
(application filed on or after May 29, 2000)

The Patent Term Adjustment is 0 day(s). Any patent to issue from the above-identified application will include an indication of the adjustment on the front page.

If a Continued Prosecution Application (CPA) was filed in the above-identified application, the filing date that determines Patent Term Adjustment is the filing date of the most recent CPA.

Applicant will be able to obtain more detailed information by accessing the Patent Application Information Retrieval (PAIR) WEB site (http://pair.uspto.gov).

Any questions regarding the Patent Term Extension or Adjustment determination should be directed to the Office of Patent Legal Administration at (571)-272-7702. Questions relating to issue and publication fee payments should be directed to the Application Assistance Unit (AAU) of the Office of Data Management (ODM) at (571)-272-4200.

APPLICANT(s) (Please see PAIR WEB site http://pair.uspto.gov for additional applicants):

NOKIA TECHNOLOGIES OY, Espoo, FINLAND;
Mehmet Oguz BICI, Tampere, FINLAND;
Jani LAINEMA, Tampere, FINLAND;
Kemal UGUR, Tampere, FINLAND;

The United States represents the largest, most dynamic marketplace in the world and is an unparalleled location for business investment, innovation, and commercialization of new technologies. The USA offers tremendous resources and advantages for those who invest and manufacture goods here. Through SelectUSA, our nation works to encourage and facilitate business investment. To learn more about why the USA is the best country in the world to develop technology, manufacture products, and grow your business, visit SelectUSA.gov.

IR103 (Rev. 10/09)

UNITED STATES PATENT AND TRADEMARK OFFICE

**UNITED STATES DEPARTMENT OF COMMERCE**
**United States Patent and Trademark Office**
Address: COMMISSIONER FOR PATENTS
P.O. Box 1450
Alexandria, Virginia 22313-1450
www.uspto.gov

| APPLICATION NUMBER | PATENT NUMBER | GROUP ART UNIT | REQUEST ID |
|---|---|---|---|
| 16/356,733 | 10536714 | 2488 | 110349 |

## PAIR Correspondence Address/Fee Address Change

The following fields have been changed to Customer Number 00197 on 04/21/2020 via Private PAIR in view of the certification copied below that authorized the change.

- Maintenance Fee Address

The address for Customer Number 00197 is:
00197
CPA GLOBAL LIMITED
2318 Mill Road 12th Floor
ALEXANDRIA, VA 22314

**I certify, in accordance with 37 CFR 1.4(d)(4) that I am:**

An attorney or Agent of Record registered to practice before the Patent and Trademark Office who has been given power of attorney in this application

| | |
|---|---|
| **Signature:** | /Guy R. Gosnell/ |
| **Name:** | Guy R. Gosnell |
| **Registration Number:** | 34610 |