(12) INTERNATIONAL APPLICATION PUBLISHED UNDER THE PATENT COOPERATION TREATY (PCT)

(19) World Intellectual Property Organization
International Bureau

(43) International Publication Date
10 May 2013 (10.05.2013)

WIPO | PCT

(10) International Publication Number
WO 2013/064749 A1

(51) International Patent Classification:
H04N 7/26 (2006.01) *H04N 7/34* (2006.01)
H04N 7/50 (2006.01) *G06T 9/00* (2006.01)

(21) International Application Number:
PCT/FI2012/051070

(22) International Filing Date:
2 November 2012 (02.11.2012)

(25) Filing Language: English

(26) Publication Language: English

(30) Priority Data:
61/555,703 4 November 2011 (04.11.2011) US

(71) Applicant: **NOKIA CORPORATION** [FI/FI]; Keilalahdentie 4, FI-02150 Espoo (FI).

(72) Inventors: **BICI, Mehmet Oguz**; Tammelan puistokatu 1-3 D 46, FI-33500 Tampere (FI). **LAINEMA, Jani**; Kisakentänkatu 12 B 6, FI-33230 Tampere (FI). **UGUR, Kemal**; Lapintie 6D 25, FI-33100 Tampere (FI).

(74) Agents: **NOKIA CORPORATION** et al.; IPR Department, Jussi Jaatinen, Keilalahdentie 4, FI-02150 Espoo (FI).

(81) Designated States *(unless otherwise indicated, for every kind of national protection available)*: AE, AG, AL, AM, AO, AT, AU, AZ, BA, BB, BG, BH, BN, BR, BW, BY, BZ, CA, CH, CL, CN, CO, CR, CU, CZ, DE, DK, DM, DO, DZ, EC, EE, EG, ES, FI, GB, GD, GE, GH, GM, GT, HN, HR, HU, ID, IL, IN, IS, JP, KE, KG, KM, KN, KP, KR, KZ, LA, LC, LK, LR, LS, LT, LU, LY, MA, MD, ME, MG, MK, MN, MW, MX, MY, MZ, NA, NG, NI, NO, NZ, OM, PA, PE, PG, PH, PL, PT, QA, RO, RS, RU, RW, SC, SD, SE, SG, SK, SL, SM, ST, SV, SY, TH, TJ, TM, TN, TR, TT, TZ, UA, UG, US, UZ, VC, VN, ZA, ZM, ZW.

(84) Designated States *(unless otherwise indicated, for every kind of regional protection available)*: ARIPO (BW, GH, GM, KE, LR, LS, MW, MZ, NA, RW, SD, SL, SZ, TZ, UG, ZM, ZW), Eurasian (AM, AZ, BY, KG, KZ, RU, TJ, TM), European (AL, AT, BE, BG, CH, CY, CZ, DE, DK, EE, ES, FI, FR, GB, GR, HR, HU, IE, IS, IT, LT, LU, LV, MC, MK, MT, NL, NO, PL, PT, RO, RS, SE, SI, SK, SM,

[Continued on next page]

(54) Title: METHOD FOR VIDEO CODING AND AN APPARATUS

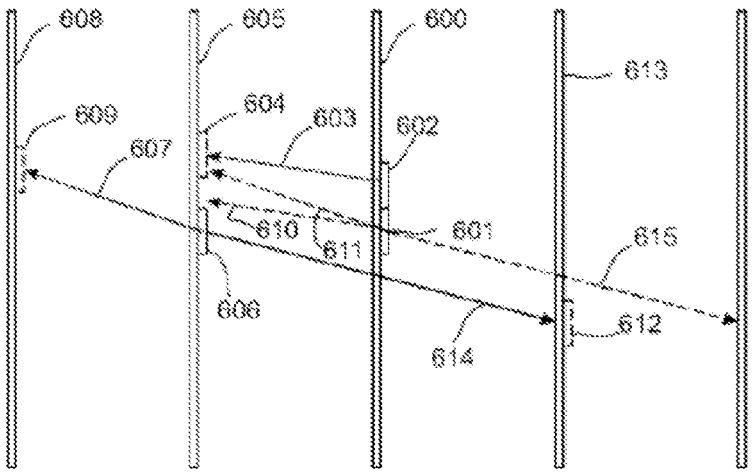

Fig. 6b

(57) Abstract: The invention relates to a method for encoding, a method for decoding, an apparatus, computer program products, an encoder and a decoder for video information. The motion vector for a block in a video image is predicted from a set of motion vector prediction candidates determined based on previously-coded motion vectors. A motion vector prediction candidate is included in the set based on the location of the block associated with the first spatial motion vector prediction candidate and in comparison with motion vector prediction candidates already in the set.

WO 2013/064749 A1

TR), OAPI (BF, BJ, CF, CG, CI, CM, GA, GN, GQ, GW, ML, MR, NE, SN, TD, TG).

Published:

— *with international search report (Art. 21(3))*

— *before the expiration of the time limit for amending the claims and to be republished in the event of receipt of amendments (Rule 48.2(h))*

METHOD FOR VIDEO CODING AND APPARATUS

TECHNICAL FIELD

There is provided a method for encoding, a method for decoding, an apparatus, computer program products, an encoder and a decoder.

BACKGROUND INFORMATION

This section is intended to provide a background or context to the invention that is recited in the claims. The description herein may include concepts that could be pursued, but are not necessarily ones that have been previously conceived or pursued. Therefore, unless otherwise indicated herein, what is described in this section is not prior art to the description and claims in this application and is not admitted to be prior art by inclusion in this section

A video codec may comprise an encoder which transforms input video into a compressed representation suitable for storage and/or transmission and a decoder that can uncompress the compressed video representation back into a viewable form, or either one of them. The encoder may discard some information in the original video sequence in order to represent the video in a more compact form, for example at a lower bit rate.

Many hybrid video codecs, operating for example according to the International Telecommunication Union's ITU-T H.263 and H.264 coding standards, encode video information in two phases. In the first phase, pixel values in a certain picture area or "block" are predicted. These pixel values can be predicted, for example, by motion compensation mechanisms, which involve finding and indicating an area in one of the previously encoded video frames (or a later coded video frame) that corresponds closely to the block being coded. Additionally, pixel values can be predicted by spatial mechanisms which involve finding and indicating a spatial region relationship, for example by using pixel values around the block to be coded in a specified manner.

Prediction approaches using image information from a previous (or a later) image can also be called as Inter prediction methods, and prediction approaches using image information within the same image can also be called as Intra prediction methods.

The second phase is one of coding the error between the predicted block of pixels and the original block of pixels. This may be accomplished by transforming the difference in pixel values using a specified transform. This transform may be e.g. a Discrete Cosine Transform (DCT) or a variant thereof. After transforming the difference, the transformed difference may be quantized and entropy encoded.

By varying the fidelity of the quantization process, the encoder can control the balance between the accuracy of the pixel representation, (in other words, the quality of the picture) and the size of the resulting encoded video representation (in other words, the file size or transmission bit rate).

The decoder reconstructs the output video by applying a prediction mechanism similar to that used by the encoder in order to form a predicted representation of the pixel blocks (using the motion or spatial information created by the encoder and stored in the compressed representation of the image) and

Amazon.com, Inc., Amazon.com Services LLC - Ex. 1017, Page 000003

prediction error decoding (the inverse operation of the prediction error coding to recover the quantized prediction error signal in the spatial domain).

After applying pixel prediction and error decoding processes the decoder combines the prediction and the prediction error signals (the pixel values) to form the output video frame.

The decoder (and encoder) may also apply additional filtering processes in order to improve the quality of the output video before passing it for display and/or storing as a prediction reference for the forthcoming frames in the video sequence.

In some video codecs, such as High Efficiency Video Coding Working Draft 4, video pictures may be divided into coding units (CU) covering the area of a picture. A coding unit consists of one or more prediction units (PU) defining the prediction process for the samples within the coding unit and one or more transform units (TU) defining the prediction error coding process for the samples in the coding unit. A coding unit may consist of a square block of samples with a size selectable from a predefined set of possible coding unit sizes. A coding unit with the maximum allowed size can be named as a largest coding unit (LCU) and the video picture may be divided into non-overlapping largest coding units. A largest coding unit can further be split into a combination of smaller coding units, e.g. by recursively splitting the largest coding unit and resultant coding units. Each resulting coding unit may have at least one prediction unit and at least one transform unit associated with it. Each prediction unit and transform unit can further be split into smaller prediction units and transform units in order to increase granularity of the prediction and prediction error coding processes, respectively. Each prediction unit may have prediction information associated with it defining what kind of a prediction is to be applied for the pixels within that prediction unit (e.g. motion vector information for inter predicted prediction units and intra prediction directionality information for intra predicted prediction units). Similarly, each transform unit may be associated with information describing the prediction error decoding process for samples within the transform unit (including e.g. discrete cosine transform (DCT) coefficient information). It may be signalled at coding unit level whether prediction error coding is applied or not for each coding unit. In the case there is no prediction error residual associated with the coding unit, it can be considered there are no transform units for the coding unit. The division of the image into coding units, and division of coding units into prediction units and transform units may be signalled in the bitstream allowing the decoder to reproduce the intended structure of these units.

In some video codecs, motion information is indicated by motion vectors associated with each motion compensated image block. These motion vectors represent the displacement of the image block in the picture to be coded (in the encoder) or decoded (at the decoder) and the prediction source block in one of the previously coded or decoded images (or pictures). In order to represent motion vectors efficiently, motion vectors may be coded differentially with respect to block specific predicted motion vector. In some video codecs, the predicted motion vectors are created in a predefined way, for example by calculating the median of the encoded or decoded motion vectors of the adjacent blocks.

Another way to create motion vector predictions is to generate a list or a set of candidate predictions from blocks in the current frame and/or co-located or other blocks in temporal reference

Amazon.com, Inc., Amazon.com Services LLC - Ex. 1017, Page 000004

pictures and signalling the chosen candidate as the motion vector prediction. A spatial motion vector prediction is a prediction obtained only on the basis of information of one or more blocks of the same frame than the current frame whereas temporal motion vector prediction is a prediction obtained on the basis of information of one or more blocks of a frame different from the current frame. It may also be possible to obtain motion vector predictions by combining both spatial and temporal prediction information of one or more encoded blocks. These kinds of motion vector predictions are called as spatio-temporal motion vector predictions.

In addition to predicting the motion vector values, the reference index in the reference picture list can be predicted. The reference index may be predicted from blocks in the current frame and/or co-located or other blocks in a temporal reference picture. Moreover, some high efficiency video codecs employ an additional motion information coding/decoding mechanism, often called merging/merge mode, where all the motion field information, which includes motion vector and corresponding reference picture index for each available reference picture list, may be predicted and used without any modification or correction. Similarly, predicting the motion field information may be carried out using the motion field information of blocks in the current frame and/or co-located or other blocks in temporal reference pictures and the used motion field information is signalled among a list of motion field candidate list filled with motion field information of available blocks in the current frame and/or co-located or other blocks in temporal reference pictures.

In some video codecs the prediction residual after motion compensation is first transformed with a transform kernel (like DCT) and then coded. The reason for this is that often there still exists some correlation among the residual and transform can in many cases help reduce this correlation and provide more efficient coding.

Some video encoders utilize Lagrangian cost functions to find optimal coding modes, e.g. the desired Macroblock mode and associated motion vectors. This kind of cost function uses a weighting factor λ to tie together the (exact or estimated) image distortion due to lossy coding methods and the (exact or estimated) amount of information that is required to represent the pixel values in an image area:

$$C = D + \lambda R \qquad (1)$$

where C is the Lagrangian cost to be minimized, D is the image distortion (e.g. Mean Squared Error) with the mode and motion vectors considered, and R the number of bits needed to represent the required data to reconstruct the image block in the decoder (including the amount of data to represent the candidate motion vectors).

Some video codecs such as hybrid video codecs may generate a list of motion vector predictions (MVP) consisting of motion vectors of spatial adjacent blocks (spatial MVP) and/or motion vectors of blocks in a previously decoded frame (temporal MVP). One of the candidate motion vectors in the list is signalled to be used as the motion vector prediction of the current block. After the list is generated, some of the motion vector prediction candidates may have the same motion information. In this case, the

Amazon.com, Inc., Amazon.com Services LLC - Ex. 1017, Page 000005

identical motion vector prediction candidates may be removed to reduce redundancy. During the decoding, if the temporal motion vector prediction information is unavailable due to e.g. loss of reference frame, the decoder may not know if the temporal motion vector prediction candidate in the list is to be removed. This may lead to uncertainty for mapping the decoded candidate index to the candidates whose removal decision is based on comparing motion information with the temporal motion vector prediction. As a result, false assignment of motion vector prediction candidates may occur which may lead to degradation in the picture quality and drift of false motion information throughout the decoding process.

SUMMARY

The present invention introduces a method for generating a motion vector prediction list for an image block. In some embodiments video codecs employ in a motion prediction candidate list construction a way to reduce the complexity of the implementation. This can be achieved by performing a limited number of motion information comparisons between candidate pairs to remove the redundant candidates rather than comparing every available candidate pair. The decision of whether comparing two candidates may depend on the order of the candidates to be considered for the list and/or coding/prediction mode and/or location of the blocks associated with the candidates. In some embodiments a video codec employs a merge process for motion information coding and creates a list of motion prediction candidates from which one of the candidates is to be signalled as the motion information for the current coding or prediction unit. The motion prediction candidates may consist of several spatial motion predictions and a temporal motion prediction. The spatial candidates are obtained from the motion information of e.g. spatial neighbour blocks.

According to a first aspect of the present invention there is provided a method comprising:

receiving a block of pixels including a prediction unit; determining a set of spatial motion vector prediction candidates for the block of pixels; the spatial motion vector prediction candidates being provided with motion information;

selecting a first spatial motion vector prediction candidate from the set of spatial motion vector prediction candidates as a potential spatial motion vector prediction candidate to be included in a merge list for the prediction unit;

determining a subset of spatial motion vector predictions based on the location of the block associated with the first spatial motion vector prediction candidate;

comparing motion information of the first spatial motion vector prediction candidate with motion information of the spatial motion vector prediction candidate in the determined subset of spatial motion vector prediction candidates;

if at least one of the comparisons indicates that the motion vector information of the spatial motion vector prediction candidates correspond with each other, excluding the first spatial motion vector prediction candidate from the merge list.

According to a second aspect of the present invention there is provided a method comprising:

receiving an encoded block of pixels including a prediction unit;

Amazon.com, Inc., Amazon.com Services LLC - Ex. 1017, Page 000006

determining a set of spatial motion vector prediction candidates for the encoded block of pixels; the spatial motion vector prediction candidates being provided with motion information;

selecting a first spatial motion vector prediction candidate from the set of spatial motion vector prediction candidates as a potential spatial motion vector prediction candidate to be included in a merge list for the prediction unit;

determining a subset of spatial motion vector predictions based on the location of the block associated with the first spatial motion vector prediction candidate;

comparing motion information of the first spatial motion vector prediction candidate with motion information of another spatial motion vector prediction candidate of the set of spatial motion vector prediction candidates;

if at least one of the comparisons indicates that the motion vector information of the spatial motion vector prediction candidates correspond with each other, excluding the first spatial motion vector prediction candidate from the merge list.

According to a third aspect of the present invention there is provided an apparatus comprising a processor and a memory including computer program code, the memory and the computer program code configured to, with the processor, cause the apparatus to:

receive a block of pixels

including a prediction unit;

determining a set of spatial motion vector prediction candidates for the block of pixels; the spatial motion vector prediction candidates being provided with motion information;

selecting a first spatial motion vector prediction candidate from the set of spatial motion vector prediction candidates as a potential spatial motion vector prediction candidate to be included in a merge list for the prediction unit;

determining a subset of spatial motion vector predictions based on the location of the block associated with the first spatial motion vector prediction candidate;

comparing motion information of the first spatial motion vector prediction candidate with motion information of the spatial motion vector prediction candidate in the determined subset of spatial motion vector prediction candidates;

if at least one the comparisons indicates that the motion vector information of the spatial motion vector prediction candidates correspond with each other, excluding the first spatial motion vector prediction candidate from the merge list.

According to a fourth aspect of the present invention there is provided an apparatus comprising a processor and a memory including computer program code, the memory and the computer program code configured to, with the processor, cause the apparatus to:

receive an encoded block of pixels

including a prediction unit;

determining a set of spatial motion vector prediction candidates for the encoded block of pixels; the spatial motion vector prediction candidates being provided with motion information;

Amazon.com, Inc., Amazon.com Services LLC - Ex. 1017, Page 000007

selecting a first spatial motion vector prediction candidate from the set of spatial motion vector prediction candidates as a potential spatial motion vector prediction candidate to be included in a merge list for the prediction unit;

determining a subset of spatial motion vector predictions based on the location of the block associated with the first spatial motion vector prediction candidate;

comparing motion information of the first spatial motion vector prediction candidate with motion information of another spatial motion vector prediction candidate of the set of spatial motion vector prediction candidates;

if at least one of the comparisons indicates that the motion vector information of the spatial motion vector prediction candidates correspond with each other, excluding the first spatial motion vector prediction candidate from the merge list.

According to a fifth aspect of the present invention there is provided a storage medium having stored thereon a computer executable program code for use by an encoder, said program code comprises instructions for:

receiving a block of pixels including a prediction unit;

determining a set of spatial motion vector prediction candidates for the block of pixels; the spatial motion vector prediction candidates being provided with motion information;

select a first spatial motion vector prediction candidate from the set of spatial motion vector prediction candidates as a potential spatial motion vector prediction candidate to be included in a merge list for the prediction unit;

determine a subset of spatial motion vector predictions based on the location of the block associated with the first spatial motion vector prediction candidate;

compare motion information of the first spatial motion vector prediction candidate with motion information of the spatial motion vector prediction candidate in the determined subset of spatial motion vector prediction candidates;

exclude the first spatial motion vector prediction candidate from the merge list, if at least one of the comparisons indicates that the motion vector information of the spatial motion vector prediction candidates correspond with each other

According to a sixth aspect of the present invention there is provided a storage medium having stored thereon a computer executable program code for use by a decoder, said program code comprises instructions for:

receiving an encoded block of pixels including a prediction unit;

determining a set of spatial motion vector prediction candidates for the encoded block of pixels; the spatial motion vector prediction candidates being provided with motion information;

selecting a first spatial motion vector prediction candidate from the set of spatial motion vector prediction candidates as a potential spatial motion vector prediction candidate to be included in a merge list for the prediction unit;

Amazon.com, Inc., Amazon.com Services LLC - Ex. 1017, Page 000008

determining a subset of spatial motion vector predictions based on the location of the block associated with the first spatial motion vector prediction candidate;

comparing motion information of the first spatial motion vector prediction candidate with motion information of the spatial motion vector prediction candidate in the determined subset of spatial motion vector prediction candidates;

if at least one of the comparisons indicates that the motion vector information of the spatial motion vector prediction candidates correspond with each other, excluding the first spatial motion vector prediction candidate from the merge list.

According to a seventh aspect of the present invention there is provided an apparatus comprising:

means for receiving a block of pixels including a prediction unit;

means for determining a set of spatial motion vector prediction candidates for the block of pixels; the spatial motion vector prediction candidates being provided with motion information;

selecting a first spatial motion vector prediction candidate from the set of spatial motion vector prediction candidates as a potential spatial motion vector prediction candidate to be included in a merge list for the prediction unit;

determining a subset of spatial motion vector predictions based on the location of the block associated with the first spatial motion vector prediction candidate;

comparing motion information of the first spatial motion vector prediction candidate with motion information of the spatial motion vector prediction candidate in the determined subset of spatial motion vector prediction candidates;

if at least one of the comparisons indicates that the motion vector information of the spatial motion vector prediction candidates correspond with each other, excluding the first spatial motion vector prediction candidate from the merge list.

According to an eighth aspect of the present invention there is provided an apparatus comprising:

means for receiving an encoded block of pixels including a prediction unit;

means for determining a set of spatial motion vector prediction candidates for the encoded block of pixels; the spatial motion vector prediction candidates being provided with motion information;

means for selecting a first spatial motion vector prediction candidate from the set of spatial motion vector prediction candidates as a potential spatial motion vector prediction candidate to be included in a merge list for the prediction unit;

means for determining a subset of spatial motion vector predictions based on the location of the block associated with the first spatial motion vector prediction candidate;

means for comparing motion information of the first spatial motion vector prediction candidate with motion information of the spatial motion vector prediction candidate in the determined subset of spatial motion vector prediction candidates;

means for excluding the first spatial motion vector prediction candidate from the merge list, if at least one of the comparisons indicates that the motion vector information of the spatial motion vector prediction candidates correspond with each other.

Amazon.com, Inc., Amazon.com Services LLC - Ex. 1017, Page 000009

DESCRIPTION OF THE DRAWINGS

For better understanding of the present invention, reference will now be made by way of example to the accompanying drawings in which:

Figure 1 shows schematically an electronic device employing some embodiments of the invention;

Figure 2 shows schematically a user equipment suitable for employing some embodiments of the invention;

Figure 3 further shows schematically electronic devices employing embodiments of the invention connected using wireless and wired network connections;

Figure 4a shows schematically an embodiment of the invention as incorporated within an encoder;

Figure 4b shows schematically an embodiment of a prediction reference list generation and modification according to some embodiments of the invention;

Figures 5a and 5b show a flow diagram showing the operation of an embodiment of the invention with respect to the encoder as shown in figure 4a;

Figure 6a illustrates an example of spatial and temporal prediction of a prediction unit;

Figure 6b illustrates another example of spatial and temporal prediction of a prediction unit;

Figure 7 shows schematically an embodiment of the invention as incorporated within a decoder;

Figures 8a and 8b show a flow diagram of showing the operation of an embodiment of the invention with respect to the decoder shown in figure 7;

Figure 9 illustrates an example of a coding unit and some neighbour blocks of the coding unit;

Figure 10a illustrates an example of a horizontal division of the coding unit;

Figure 10b illustrates an example of a vertical division of the coding unit;

Figure 11a illustrates locations of five spatial neighbours A0, A1, B0, B1, B2 for a prediction unit generated as the second prediction unit of a horizontally divided coding unit;

Figure 11b illustrates locations of five spatial neighbours for a prediction unit generated as the second prediction unit of a vertically divided coding unit; and

Figure 12 illustrates an example of blocks between some spatial neighbours of a coding unit.

DETAILED DESCRIPTION OF SOME EXAMPLE EMBODIMENTS

The following describes in further detail suitable apparatus and possible mechanisms for the provision of improving the prediction accuracy and hence possibly reducing information to be transmitted in video coding systems. In this regard reference is first made to Figure 1 which shows a schematic block diagram of an exemplary apparatus or electronic device 50, which may incorporate a codec according to an embodiment of the invention.

The electronic device 50 may for example be a mobile terminal or user equipment of a wireless communication system. However, it would be appreciated that embodiments of the invention may be

Amazon.com, Inc., Amazon.com Services LLC - Ex. 1017, Page 000010

implemented within any electronic device or apparatus which may require encoding and decoding or encoding or decoding video images.

The apparatus 50 may comprise a housing 30 for incorporating and protecting the device. The apparatus 50 further may comprise a display 32 in the form of a liquid crystal display. In other embodiments of the invention the display may be any suitable display technology suitable to display an image or video. The apparatus 50 may further comprise a keypad 34. In other embodiments of the invention any suitable data or user interface mechanism may be employed. For example the user interface may be implemented as a virtual keyboard or data entry system as part of a touch-sensitive display. The apparatus may comprise a microphone 36 or any suitable audio input which may be a digital or analogue signal input. The apparatus 50 may further comprise an audio output device which in embodiments of the invention may be any one of: an earpiece 38, speaker, or an analogue audio or digital audio output connection. The apparatus 50 may also comprise a battery 40 (or in other embodiments of the invention the device may be powered by any suitable mobile energy device such as solar cell, fuel cell or clockwork generator). The apparatus may further comprise an infrared port 42 for short range line of sight communication to other devices. In other embodiments the apparatus 50 may further comprise any suitable short range communication solution such as for example a Bluetooth wireless connection or a USB/firewire wired connection.

The apparatus 50 may comprise a controller 56 or processor for controlling the apparatus 50. The controller 56 may be connected to memory 58 which in embodiments of the invention may store both data in the form of image and audio data and/or may also store instructions for implementation on the controller 56. The controller 56 may further be connected to codec circuitry 54 suitable for carrying out coding and decoding of audio and/or video data or assisting in coding and decoding carried out by the controller 56.

The apparatus 50 may further comprise a card reader 48 and a smart card 46, for example a UICC and UICC reader for providing user information and being suitable for providing authentication information for authentication and authorization of the user at a network.

The apparatus 50 may comprise radio interface circuitry 52 connected to the controller and suitable for generating wireless communication signals for example for communication with a cellular communications network, a wireless communications system or a wireless local area network. The apparatus 50 may further comprise an antenna 44 connected to the radio interface circuitry 52 for transmitting radio frequency signals generated at the radio interface circuitry 52 to other apparatus(es) and for receiving radio frequency signals from other apparatus(es).

In some embodiments of the invention, the apparatus 50 comprises a camera capable of recording or detecting individual frames which are then passed to the codec 54 or controller for processing. In some embodiments of the invention, the apparatus may receive the video image data for processing from another device prior to transmission and/or storage. In some embodiments of the invention, the apparatus 50 may receive either wirelessly or by a wired connection the image for coding/decoding.

Amazon.com, Inc., Amazon.com Services LLC - Ex. 1017, Page 000011

With respect to Figure 3, an example of a system within which embodiments of the present invention can be utilized is shown. The system 10 comprises multiple communication devices which can communicate through one or more networks. The system 10 may comprise any combination of wired or wireless networks including, but not limited to a wireless cellular telephone network (such as a GSM, UMTS, CDMA network etc), a wireless local area network (WLAN) such as defined by any of the IEEE 802.x standards, a Bluetooth personal area network, an Ethernet local area network, a token ring local area network, a wide area network, and the Internet.

The system 10 may include both wired and wireless communication devices or apparatus 50 suitable for implementing embodiments of the invention.

For example, the system shown in Figure 3 shows a mobile telephone network 11 and a representation of the internet 28. Connectivity to the internet 28 may include, but is not limited to, long range wireless connections, short range wireless connections, and various wired connections including, but not limited to, telephone lines, cable lines, power lines, and similar communication pathways.

The example communication devices shown in the system 10 may include, but are not limited to, an electronic device or apparatus 50, a combination of a personal digital assistant (PDA) and a mobile telephone 14, a PDA 16, an integrated messaging device (IMD) 18, a desktop computer 20, a notebook computer 22. The apparatus 50 may be stationary or mobile when carried by an individual who is moving. The apparatus 50 may also be located in a mode of transport including, but not limited to, a car, a truck, a taxi, a bus, a train, a boat, an airplane, a bicycle, a motorcycle or any similar suitable mode of transport.

Some or further apparatuses may send and receive calls and messages and communicate with service providers through a wireless connection 25 to a base station 24. The base station 24 may be connected to a network server 26 that allows communication between the mobile telephone network 11 and the internet 28. The system may include additional communication devices and communication devices of various types.

The communication devices may communicate using various transmission technologies including, but not limited to, code division multiple access (CDMA), global systems for mobile communications (GSM), universal mobile telecommunications system (UMTS), time divisional multiple access (TDMA), frequency division multiple access (FDMA), transmission control protocol-internet protocol (TCP-IP), short messaging service (SMS), multimedia messaging service (MMS), email, instant messaging service (IMS), Bluetooth, IEEE 802.11 and any similar wireless communication technology. A communications device involved in implementing various embodiments of the present invention may communicate using various media including, but not limited to, radio, infrared, laser, cable connections, and any suitable connection.

With respect to Figure 4a, a block diagram of a video encoder suitable for carrying out embodiments of the invention is shown. Furthermore, with respect to Figures 5a and 5b, the operation of the encoder exemplifying embodiments of the invention specifically with respect to construction of the list of candidate predictions is shown as a flow diagram.

Amazon.com, Inc., Amazon.com Services LLC - Ex. 1017, Page 000012

Figure 4a shows the encoder as comprising a pixel predictor 302, prediction error encoder 303 and prediction error decoder 304. Figure 4a also shows an embodiment of the pixel predictor 302 as comprising an inter-predictor 306, an intra-predictor 308, a mode selector 310, a filter 316, and a reference frame memory 318. In this embodiment the mode selector 310 comprises a block processor 381 and a cost evaluator 382. The encoder may further comprise an entropy encoder 330 for entropy encoding the bit stream.

Figure 4b depicts an embodiment of the inter predictor 306. The inter predictor 306 comprises a reference frame selector 360 for selecting reference frame or frames, a motion vector definer 361, a prediction list modifier 363 and a motion vector selector 364. These elements or some of them may be part of a prediction processor 362 or they may be implemented by using other means.

The pixel predictor 302 receives the image 300 to be encoded at both the inter-predictor 306 (which determines the difference between the image and a motion compensated reference frame 318) and the intra-predictor 308 (which determines a prediction for an image block based only on the already processed parts of the current frame or picture). The output of both the inter-predictor and the intra-predictor may be passed to the mode selector 310. The intra-predictor 308 may have more than one intra-prediction modes. Hence, each mode may perform the intra-prediction and provide the predicted signal to the mode selector 310. The mode selector 310 also receives a copy of the image 300.

The mode selector 310 determines which encoding mode to use to encode the current block. If the mode selector 310 decides to use an inter-prediction mode it will pass the output of the inter-predictor 306 to the output of the mode selector 310. If the mode selector 310 decides to use an intra-prediction mode it will pass the output of one of the intra-predictor modes to the output of the mode selector 310.

The output of the mode selector is passed to a first summing device 321. The first summing device may subtract the pixel predictor 302 output from the image 300 to produce a first prediction error signal 320 which is input to the prediction error encoder 303.

The pixel predictor 302 further receives from a preliminary reconstructor 339 the combination of the prediction representation of the image block 312 and the output 338 of the prediction error decoder 304. The preliminary reconstructed image 314 may be passed to the intra-predictor 308 and to a filter 316. The filter 316 receiving the preliminary representation may filter the preliminary representation and output a final reconstructed image 340 which may be saved in a reference frame memory 318. The reference frame memory 318 may be connected to the inter-predictor 306 to be used as the reference image against which the future image 300 is compared in inter-prediction operations.

The operation of the pixel predictor 302 may be configured to carry out any known pixel prediction algorithm known in the art.

The pixel predictor 302 may also comprise a filter 385 to filter the predicted values before outputting them from the pixel predictor 302.

The operation of the prediction error encoder 302 and prediction error decoder 304 will be described hereafter in further detail. In the following examples the encoder generates images in terms of 16x16 pixel macroblocks which go to form the full image or picture. Thus, for the following examples

Amazon.com, Inc., Amazon.com Services LLC - Ex. 1017, Page 000013

the pixel predictor 302 outputs a series of predicted macroblocks of size 16x16 pixels and the first summing device 321 outputs a series of 16x16 pixel residual data macroblocks which may represent the difference between a first macro-block in the image 300 against a predicted macro-block (output of pixel predictor 302). It would be appreciated that other size macro blocks may be used.

The prediction error encoder 303 comprises a transform block 342 and a quantizer 344. The transform block 342 transforms the first prediction error signal 320 to a transform domain. The transform is, for example, the DCT transform. The quantizer 344 quantizes the transform domain signal, e.g. the DCT coefficients, to form quantized coefficients.

The prediction error decoder 304 receives the output from the prediction error encoder 303 and performs the opposite processes of the prediction error encoder 303 to produce a decoded prediction error signal 338 which when combined with the prediction representation of the image block 312 at the second summing device 339 produces the preliminary reconstructed image 314. The prediction error decoder may be considered to comprise a dequantizer 346, which dequantizes the quantized coefficient values, e.g. DCT coefficients, to reconstruct the transform signal and an inverse transformation block 348, which performs the inverse transformation to the reconstructed transform signal wherein the output of the inverse transformation block 348 contains reconstructed block(s). The prediction error decoder may also comprise a macroblock filter (not shown) which may filter the reconstructed macroblock according to further decoded information and filter parameters.

In the following the operation of an example embodiment of the inter predictor 306 will be described in more detail. The inter predictor 306 receives the current block for inter prediction. It is assumed that for the current block there already exists one or more neighbouring blocks which have been encoded and motion vectors have been defined for them. For example, the block on the left side and/or the block above the current block may be such blocks. Spatial motion vector predictions for the current block can be formed e.g. by using the motion vectors of the encoded neighbouring blocks and/or of non-neighbour blocks in the same slice or frame, using linear or non-linear functions of spatial motion vector predictions, using a combination of various spatial motion vector predictors with linear or non-linear operations, or by any other appropriate means that do not make use of temporal reference information. It may also be possible to obtain motion vector predictors by combining both spatial and temporal prediction information of one or more encoded blocks. These kinds of motion vector predictors may also be called as spatio-temporal motion vector predictors.

Reference frames used in encoding the neighbouring blocks have been stored to the reference frame memory 404. The reference frames may be short term references or long term references and each reference frame may have a unique index indicative of the location of the reference frame in the reference frame memory. When a reference frame is no longer used as a reference frame it may be removed from the reference frame memory or marked as a non-reference frame wherein the storage location of that reference frame may be occupied for a new reference frame. In addition to the reference frames of the neighbouring blocks the reference frame selector 360 may also select one or more other frames as potential reference frames and store them to the reference frame memory.

Amazon.com, Inc., Amazon.com Services LLC - Ex. 1017, Page 000014

Motion vector information of encoded blocks is also stored into the memory so that the inter predictor 306 is able to retrieve the motion vector information when processing motion vector candidates for the current block.

In some embodiments the motion vectors are stored into one or more lists. For example, motion vectors of uni-directionally predicted frames (e.g. P-frames) may be stored to a list called as list 0. For bi-directionally predicted frames (e.g. B-frames) there may be two lists (list 0 and list 1) and for multi-predicted frames there may be more than two lists. Reference frame indices possibly associated with the motion vectors may also be stored in one or more lists.

In some embodiments there may be two or more motion vector prediction procedures and each procedure may have its own candidate set creation process. In one procedure, only the motion vector values are used. In another procedure, which may be called as a Merge Mode, each candidate element may comprise 1) The information whether 'block was uni-predicted using only list0' or 'block was uni-predicted using only list1' or 'block was bi-predicted using list0 and list1' 2) motion vector value for list0 3) Reference picture index in list0 4) motion vector value for list1 5) Reference picture index list1. Therefore, whenever two prediction candidates are to be compared, not only the motion vector values are compared, but also the five values mentioned above may be compared to determine whether they correspond with each other or not. On the other hand, if any of the comparisons indicate that the prediction candidates do not have equal motion information, no further comparisons need be performed.

The motion vector definer 361 defines candidate motion vectors for the current frame by using one or more of the motion vectors of one or more neighbour blocks and/or other blocks of the current block in the same frame and/or co-located blocks and/or other blocks of the current block in one or more other frames. These candidate motion vectors can be called as a set of candidate predictors or a predictor set. Each candidate predictor thus represents the motion vector of one or more already encoded block. In some embodiments the motion vector of the candidate predictor is set equal to the motion vector of a neighbour block for the same list if the current block and the neighbour block refer to the same reference frames for that list. Also for temporal prediction there may be one or more previously encoded frames wherein motion vectors of a co-located block or other blocks in a previously encoded frame can be selected as candidate predictors for the current block. The temporal motion vector predictor candidate can be generated by any means that make use of the frames other than the current frame.

The candidate motion vectors can also be obtained by using more than one motion vector of one or more other blocks such as neighbour blocks of the current block and/or co-located blocks in one or more other frames. As an example, any combination of the motion vector of the block to the left of the current block, the motion vector of the block above the current block, and the motion vector of the block at the up-right corner of the current block may be used (i.e. the block to the right of the block above the current block). The combination may be a median of the motion vectors or calculated by using other formulas. For example, one or more of the motion vectors to be used in the combination may be scaled by a scaling factor, an offset may be added, and/or a constant motion vector may be added. In some embodiments the combined motion vector is based on both temporal and spatial motion vectors, e.g. the

Amazon.com, Inc., Amazon.com Services LLC - Ex. 1017, Page 000015

motion vector of one or more of the neighbour block or other block of the current block and the motion vector of a co-located block or other block in another frame.

If a neighbour block does not have any motion vector information a default motion vector such as a zero motion vector may be used instead.

Figure 9 illustrates an example of a coding unit 900 and some neighbour blocks 901—905 of the coding unit. As can be seen from Figure 9, if the coding unit 900 represents the current block, the neighbouring blocks 901—905 labelled A0, A1, B0, B1 and B2 could be such neighbour blocks which may be used when obtaining the candidate motion vectors.

Creating additional or extra motion vector predictions based on previously added predictors may be needed when the current number of candidates is limited or insufficient. This kind of creating additional candidates can be performed by combining previous two predictions and/or processing one previous candidate by scaling or adding offset and/or adding a zero motion vector with various reference indices. Hence, the motion vector definer 361 may examine how many motion vector candidates can be defined and how many potential candidate motion vectors exist for the current block. If the number of potential motion vector candidates is smaller than a threshold, the motion vector definer 361 may create additional motion vector predictions.

In some embodiments the combined motion vector can be based on motion vectors in different lists. For example, one motion vector may be defined by combining one motion vector from the list 0 and one motion vector from the list 1 e.g. when the neighbouring or co-located block is a bi-directionally predicted block and there exists one motion vector in the list 0 and one motion vector in the list 1 for the bi-directionally predicted block.

To distinguish the current block from the encoded/decoded blocks the motion vectors of which are used as candidate motion vectors, those encoded/decoded blocks are also called as reference blocks in this application.

In some embodiments not only the motion vector information of the reference block(s) is obtained (e.g. by copying) but also a reference index of the reference block in the reference picture list may be copied to the candidate list. The information whether the block was uni-predicted using only list0 or the block was uni-predicted using only list1 or the block was bi-predicted using list0 and list1 may also be copied. The candidate list may also be called as a candidate set or a set of motion vector prediction candidates.

Figure 6a illustrates an example of spatial and temporal prediction of a prediction unit. There is depicted the current block 601 in the frame 600 and a neighbour block 602 which already has been encoded. The motion vector definer 361 has defined a motion vector 603 for the neighbour block 602 which points to a block 604 in the previous frame 605. This motion vector can be used as a potential spatial motion vector prediction 610 for the current block. Figure 6a depicts that a co-located block 606 in the previous frame 605, i.e. the block at the same location than the current block but in the previous frame, has a motion vector 607 pointing to a block 609 in another frame 608. This motion vector 607 can be used as a potential temporal motion vector prediction-611 for the current frame.

Amazon.com, Inc., Amazon.com Services LLC - Ex. 1017, Page 000016

Figure 6b illustrates another example of spatial and temporal prediction of a prediction unit. In this example the block 606 of the previous frame 605 uses bi-directional prediction based on the block 609 of the frame preceding the frame 605 and on the block 612 succeeding the current frame 600. The temporal motion vector prediction for the current block 601 may be formed by using both the motion vectors 607, 614 or either of them.

The operation of the prediction list modifier 363 will now be described in more detail with reference to the flow diagram of Figures 5a and 5b. The prediction list modifier 363 initializes a motion vector prediction list to default values in block 500 of Figure 5a. The prediction list modifier 363 may also initialize a list index to an initial value such as zero. Then, in block 501 the prediction list modifier checks whether there are any motion vector candidates to process. If there is at least one motion vector candidate in the predictor set for processing, the prediction list modifier 363 generates the next motion vector candidate which may be a temporal motion vector or a spatial motion vector. The comparison can be an identicality/equivalence check or comparing the (absolute) difference against a threshold or any other similarity metric.

In the following, a merge process for motion information coding according to an example embodiment will be described in more detail. The encoder creates a list of motion prediction candidates from which one of the candidates is to be signalled as the motion information for the current coding unit or prediction unit. The motion prediction candidates may consist of several spatial motion predictions and a temporal motion prediction. The spatial candidates can be obtained from the motion information of e.g. the spatial neighbour blocks A0, A1, B0, B1, B2, whose motion information is used as spatial candidate motion predictions. The temporal motion prediction candidate may be obtained by processing the motion of a block in a frame other than the current frame. In this example embodiment, the encoder operations to construct the merge list for the spatial candidates may include the following. The operations may be carried out by the prediction list modifier 363, for example.

A maximum number of spatial motion prediction candidates to be included in the merge list may be defined. This maximum number may have been stored, for example, to the memory 58 of the apparatus 50, or to another appropriate place. It is also possible to determine the maximum number by using other means, or it may be determined in the software of the encoder of the apparatus 50.

In some embodiments the maximum number of spatial motion prediction candidates to be included in the merge list is four but in some embodiments the maximum number may be less than four or greater than four.

In this example the spatial motion prediction candidates are the spatial neighbour blocks A0, A1, B0, B1, B2. The spatial motion vector prediction candidate A1 is located on the left side of the prediction unit when the encoding/decoding order is from left to right and from top to bottom of the frame, slice or another entity to be encoded/decoded. Respectively, the spatial motion vector prediction candidate B1 is located above the prediction unit. third; the spatial motion vector prediction candidate B0 is on the right side of the spatial motion vector prediction candidate B1; the spatial motion vector prediction candidate A0 is below the spatial motion vector prediction candidate A1; and the spatial motion vector prediction

Amazon.com, Inc., Amazon.com Services LLC - Ex. 1017, Page 000017

candidate B2 is located on the same column than spatial motion vector prediction candidate A1 and on the same row than the spatial motion vector prediction candidate B1. In other words, the spatial motion vector prediction candidate B2 is cornerwise neighbouring the prediction unit as can be seen e.g. from Figure 9.

These spatial motion prediction candidates can be processed in a predetermined order, for example, A1, B1, B0, A0 and B2. The first spatial motion prediction candidate to be selected for further examination is thus A1. Before further examination is performed for the selected spatial motion prediction candidate, it may be determined whether the merge list already contains a maximum number of spatial motion prediction candidates. Hence, the prediction list modifier 363 compares 502 the number of spatial motion prediction candidates in the merge list with the maximum number, and if the number of spatial motion prediction candidates in the merge list is not less than the maximum number, the selected spatial motion prediction candidate is not included in the merge list and the process of constructing the merge list can be stopped 526. On the other hand, if the number of spatial motion prediction candidates in the merge list is less than the maximum number, a further analyses of the selected spatial motion prediction candidate is performed (blocks 504-522).

For all the spatial motion prediction candidates for which the further analyses is to be performed, some or all of the following conditions below may be tested for determining whether to include the spatial motion prediction candidate in the merge list.

The prediction list modifier 363 examines 504 if the prediction unit or block covering the spatial motion prediction candidate block is not available for motion prediction. If so, the candidate is not included in the merge list. The reason that the block is not available may be that the block is either coded in intra mode or resides in a different slice or outside of the picture area.

In addition to the common conditions above, for each spatial motion prediction candidate, if any of the following conditions holds, then the candidate is not included in the merge list, otherwise, it is included.

The prediction list modifier 363 determines 506 which spatial motion prediction candidate of the set of spatial motion prediction candidates is in question. If the spatial motion prediction candidate is the block A1, one or more of the following conditions may be examined 508, 510 to determine whether to include this spatial motion prediction candidate in the merge list or not. If the current coding unit 100 is vertically split into two rectangle prediction units 103, 104 as depicted in Figure 10b and the current prediction unit is the second prediction unit 104 in the coding/decoding order (508), this spatial motion prediction candidate is not included in the merge list. If the current coding unit 100 is not vertically split into two rectangle prediction units but it is horizontally split into two rectangle prediction units 101, 102 as depicted in Figure 10a and the current prediction unit is the second prediction unit in the coding/decoding order and the block A1 has the same motion information as the block B1 (510), this spatial motion prediction candidate (block A1) is not included in the merge list. In the example of Figure 10a the second prediction unit is the lower prediction unit 102 of the coding unit 100 and in the example of Figure 10b the second prediction unit is the rightmost prediction unit 104 of the coding unit 100. If

Amazon.com, Inc., Amazon.com Services LLC - Ex. 1017, Page 000018

none of the conditions above is fulfilled the block A1 is included in the merge list as a spatial motion prediction candidate (524).

If the spatial motion prediction candidate is the block B1, one or more of the following conditions may be examined 512, 514 to determine whether to include this spatial motion prediction candidate in the merge list or not. If the current coding unit 100 is horizontally split into two rectangle prediction units 101, 102 as depicted in Figure 10a and the current prediction unit is the second prediction unit 104 in the coding/decoding order (512), this spatial motion prediction candidate is not included in the merge list. If the current coding unit 100 is not horizontally split into two rectangle prediction units and if the block B1 has the same motion information than the block A1 (514), this spatial motion prediction candidate (block B1) is not included in the merge list. If none of the conditions above is fulfilled the block B1 is included in the merge list as a spatial motion prediction candidate (524).

If the spatial motion prediction candidate is the block B0, this spatial motion prediction candidate is not included in the merge list if the block B0 has the same motion information than the block B1 (516). Otherwise, if the number of spatial motion prediction candidates in the merge list is less than the maximum number of spatial motion prediction candidates, this spatial motion prediction candidate (block B0) is included in the merge list (524).

If the spatial motion prediction candidate is the block A0, this spatial motion prediction candidate is not included in the merge list if the block A0 has the same motion information than the block A1 (518). Otherwise, if the number of spatial motion prediction candidates in the merge list is less than the maximum number of spatial motion prediction candidates, this spatial motion prediction candidate (block A0) is included in the merge list (524).

If the spatial motion prediction candidate is the block B2, this spatial motion prediction candidate is not included in the merge list if the maximum number of spatial motion prediction candidates is four and the other blocks A0, A1, B0, and B1 are all decided to be included in the merge list (520). Otherwise, if the number of spatial motion prediction candidates in the merge list is less than the maximum number of spatial motion prediction candidates, the block B2 is not included in the merge list if the block B2 has the same motion information than the block B1 or the block A1 (522).

Then, after processing the blocks A1, B1, B0, A0 and B2 and including a subset of them in the merge list based on the above described conditions, no more redundancy check between these candidates are performed and remaining temporal motion prediction candidate and/or other possible additional candidates may be processed.

Comparing two blocks whether they have the same motion may be performed by comparing all the elements of the motion information, namely 1) The information whether 'the prediction unit is uni-predicted using only reference picture list0' or 'the prediction unit is uni-predicted using only reference picture list1' or 'the prediction unit is bi-predicted using both reference picture list0 and list1' 2) Motion vector value corresponding to the reference picture list0 3) Reference picture index in the reference picture list0 4) Motion vector value corresponding to the reference picture list1 5) Reference picture index in the reference picture list1.

Amazon.com, Inc., Amazon.com Services LLC - Ex. 1017, Page 000019

In some embodiments similar restrictions for comparing candidate pairs can be applied if the current coding unit is coded/decoded by splitting into four or any number of prediction units.

The maximum number of merge list candidates can be any non-zero value. In the example above the merger list candidates were the spatial neighbour blocks A0, A1, B0, B1, B2 and the temporal motion prediction candidate, but there may be more than one temporal motion prediction candidate and also other spatial motion prediction candidates than the spatial neighbour blocks. In some embodiments there may also be other spatial neighbour blocks than the blocks A0, A1, B0, B1, B2.

It is also possible that the maximum number of spatial motion prediction candidates included in the list can be different than four.

In some embodiments the maximum number of merge list candidates and maximum number of spatial motion prediction candidates included in the list can depend on whether a temporal motion vector candidate is included in the list or not.

A different number of spatial motion prediction candidates located at various locations in the current frame can be processed. The locations can be the same as or different than A1, B1, B0, A0 and B2.

The decision of including which spatial motion prediction candidates in the list can be realized in two steps. In the first step, some of the candidates are eliminated by checking whether the candidate block is available and/or the candidate block's prediction mode is intra and/or whether the current block is a second prediction unit of a coding unit coded with two prediction units and the candidate has the same motion with the first prediction unit. In the second step, remaining candidates are examined and some or all of them are included in the merge list. The examination in the second step does not include comparing motion information of each possible candidate pair but includes a subset of the possible comparison combinations.

The decisions for the candidates can be taken in any order of A1, B1, B0, A0 and B2 or independently in parallel.

For each candidate and/or a subset of the candidates, the following conditions may also be checked: Whether the candidate block has the same motion as the first prediction unit of the current coding unit when the current coding unit is split into two rectangle prediction units and the current prediction unit is the second prediction unit in the coding/decoding order.

Additional conditions related to various properties of current and/or previous slices and/or current and/or neighbour blocks can be utilized for determining whether to include a candidate in the list.

Motion comparison can be realized by comparing a subset of the whole motion information. For example, only the motion vector values for some or all reference picture lists and/or reference indices for some or all reference picture lists and/or an identifier value assigned to each block to represent its motion information can be compared. The comparison can be an identicality or an equivalence check or comparing the (absolute) difference against a threshold or any other similarity metric.

Amazon.com, Inc., Amazon.com Services LLC - Ex. 1017, Page 000020

Conditions for deciding whether a candidate is to be included in the list can include motion information comparison with any subset of the candidates as long as not all possible candidate pairs are compared eventually.

Deciding whether a temporal motion vector candidate is to be included in the list can be based on comparing its motion information with motion information of a subset of the spatial motion vector prediction candidates.

When comparing motion information of two blocks, motion information of additional blocks can be considered too. For example, when comparing the block B2 and the block A1, all the blocks between the block B2 and the block A1 (illustrated in Figure 12) are checked whether they have the same motion; and when comparing the block B2 and the block B1, all the blocks between the block B2 and the block B1 (illustrated in Figure 12) are checked whether they have the same motion. This embodiment can be implemented so that the right-most block of each prediction unit or all blocks of each prediction unit may store the information of how many consecutive blocks to the above have the same motion information. Also the bottom-most block of each prediction unit or all blocks of each prediction unit may store the information of how many consecutive blocks to the left have the same motion information. Using this information the condition for not including B0 in the list can be realized by checking if the number of consecutive blocks with the same motion to the left of B0 is greater than 0. The condition for not including A0 in the list can be realized by checking if the number of consecutive blocks with same motion to the above of A0 is greater than 0. The conditions for not including B2 can be modified as follows:

It is not examined whether the block B2 has same motion as the block B1 or whether the block B2 has same motion as the block A1, but how many consecutive blocks exists to the left of the block B1 with the same motion than the block B1 and/or how many consecutive blocks exist above the block A1 with the same motion. If the number of consecutive blocks with the same motion to the left of the block B1 is greater than the number of blocks between B2 and B1, or if the number of consecutive blocks with the same motion above the block A1 is greater than the number of blocks between the block B2 and the block A1, the block B2 is not included in the merge list.

If the above implementation is used, the value of how many consecutive blocks to the left/above have the same motion information can be determined by direct comparison of motion information or checking the prediction mode and/or the merge index if the block employs a merge process.

When coding/decoding the selected merge index, the information whether the merge process is employed for coding/decoding a Skip mode coding unit or an Inter Merge mode prediction unit can be taken into account. For example, if a context adaptive binary arithmetic coder (CABAC) is used for entropy coding/decoding, different contexts can be used for the bins depending on the coding mode (Skip mode or inter merge mode) of the current block. Furthermore, assigning two contexts depending on whether the merge process is employed in a Skip mode coding unit or an inter Merge mode prediction unit can be applied for only the most significant bin of the merge index.

Amazon.com, Inc., Amazon.com Services LLC - Ex. 1017, Page 000021

During the process of removal of redundant candidates, comparison between motion vector predictor candidates can also be based on any other information than the motion vector values. For example, it can be based on linear or non-linear functions of motion vector values, coding or prediction types of the blocks used to obtain the motion information, block size, the spatial location in the frame/(largest) coding unit/macroblock, the information whether blocks share the same motion with a block, the information whether blocks are in the same coding/prediction unit, etc.

The following pseudo code illustrates an example embodiment of the invention for constructing the merging list.

Inputs to this process are

- a luma location (xP, yP) specifying the top-left luma sample of the current prediction unit relative to the top-left sample of the current picture;
- variables specifying the width and the height of the prediction unit for luma, nPSW and nPSH; and
- a variable PartIdx specifying the index of the current prediction unit within the current coding unit.

Outputs of this process are (with N being replaced by A_0, A_1, B_0, B_1 or B_2 and with X being replaced by 0 or 1)

- the availability flags availableFlagN of the neighbouring prediction units,
- the reference indices refIdxLXN of the neighbouring prediction units,
- the prediction list utilization flags predFlagLXN of the neighbouring prediction units,
- the motion vectors mvLXN of the neighbouring prediction units.

For the derivation of availableFlagN, with N being A_0, A_1, B_0, B_1 or B_2 and (xN, yN) being (xP−1, yP + nPSH), (xP−1, yP + nPSH−1), (xP + nPSW, yP−1), (xP+nPSW−1, yP−1) or (xP−1, yP−1), the following applies.

- If one of the following conditions is true, the availableFlagN is set equal to 0, both components mvLXN are set equal to 0, refIdxLXN and predFlagLX[xN, yN] of the prediction unit covering luma location (xN, yN) are assigned respectively to mvLXN, refIdxLXN and predFlagLXN.
  - N is equal to B_2 and availableFlagA_0 + availableFlagA_1 + availableFlagB_0 + availableFlagB_1 is equal to 4.
  - The prediction unit covering luma location (xN, yN) is not available or PredMode is MODE_INTRA.
  - N is equal to A1 and PartMode of the current prediction unit is PART_Nx2N or PART_nLx2N or PART_nRx2N and PartIdx is equal to 1.
  - N is equal to A1 and PartMode of the current prediction unit is PART_2NxN or PART_2NxnU or PART_2NxnD and PartIdx is equal to 1 and the prediction units covering luma location (xP+nPSW−1, yP−1) (N = B1) and luma location (xN, yN) (Cand. N) have identical motion parameters:
    - mvLX[xP+nPSW−1, yP−1] == mvLX[xN, yN]
    - refIdxLX[xP+nPSW−1, yP−1] == refIdxLX[xN, yN]
    - predFlagLX[xP+nPSW−1, yP−1] == predFlagLX[xN, yN]

Amazon.com, Inc., Amazon.com Services LLC - Ex. 1017, Page 000022

- N is equal to B1 and PartMode of the current prediction unit is 2NxN or PART_2NxnU or PART_2NxnD and PartIdx is equal to 1.
- N is equal to B1 and the prediction units covering luma location (xP−1, yP+nPSH−1) (N = A1) and luma location (xN, yN) (Cand. N) have identical motion parameters:
  - mvLX[xP−1, yP+nPSH−1] == mvLX[xN, yN]
  - refIdxLX[xP−1, yP+nPSH−1] == refIdxLX[xN, yN]
  - predFlagLX[xP−1, yP+nPSH−1] == predFlagLX[xN, yN]
- N is equal to B0 and the prediction units covering luma location (xP+nPSW−1, yP−1) (N = B1) and luma location (xN, yN) (Cand. N) have identical motion parameters:
  - mvLX[xP+nPSW−1, yP−1] == mvLX[xN, yN]
  - refIdxLX[xP+nPSW−1, yP−1] == refIdxLX[xN, yN]
  - predFlagLX[xP+nPSW−1, yP−1] == predFlagLX[xN, yN]
- N is equal to A0 and the prediction units covering luma location (xP−1, yP+nPSH−1) (N = A1) and luma location (xN, yN) (Cand. N) have identical motion parameters:
  - mvLX[xP−1, yP+nPSH−1] == mvLX[xN, yN]
  - refIdxLX[xP−1, yP+nPSH−1] == refIdxLX[xN, yN]
  - predFlagLX[xP−1, yP+nPSH−1] == predFlagLX[xN, yN]
- N is equal to B2 and the prediction units covering luma location (xP+nPSW−1, yP−1) (N = B1) and luma location (xN, yN) (Cand. N) have identical motion parameters:
  - mvLX[xP+nPSW−1, yP−1] == mvLX[xN, yN]
  - refIdxLX[xP+nPSW−1, yP−1] == refIdxLX[xN, yN]
  - predFlagLX[xP+nPSW−1, yP−1] == predFlagLX[xN, yN]
- N is equal to B2 and the prediction units covering luma location (xP−1, yP+nPSH−1) (N = A1) and luma location (xN, yN) (Cand. N) have identical motion parameters:
  - mvLX[xP−1, yP+nPSH−1] == mvLX[xN, yN]
  - refIdxLX[xP−1, yP+nPSH−1] == refIdxLX[xN, yN]
  - predFlagLX[xP−1, yP+nPSH−1] == predFlagLX[xN, yN]
- PartMode of the current prediction unit is PART_NxN and PartIdx is equal to 3 and the prediction units covering luma location (xP−1, yP) (PartIdx = 2) and luma location (xP−1, yP−1) (PartIdx = 0) have identical motion parameters:
  - mvLX[xP−1, yP] == mvLX[xP−1, yP−1]
  - refIdxLX[xP−1, yP] == refIdxLX[xP−1, yP−1]
  - predFlagLX[xP−1, yP] == predFlagLX[xP−1, yP−1]

  and the prediction units covering luma location (xP, yP−1) (PartIdx = 1) and luma location (xN, yN) (Cand. N) have identical motion parameters:
  - mvLX[xP, yP−1] == mvLX[xN, yN]
  - refIdxLX[xP, yP−1] == refIdxLX[xN, yN]
  - predFlagLX[xP, yP−1] == predFlagLX[xN, yN]

Amazon.com, Inc., Amazon.com Services LLC - Ex. 1017, Page 000023

- PartMode of the current prediction unit is PART_NxN and PartIdx is equal to 3 and the prediction units covering luma location (xP, yP−1) (PartIdx = 1) and luma location (xP−1, yP−1) (PartIdx = 0) have identical motion parameters:
  - mvLX[xP, yP−1] == mvLX[xP−1, yP−1]
  - refIdxLX[xP, yP−1] == refIdxLX[xP−1, yP−1]
  - predFlagLX[xP, yP−1] == predFlagLX[xP−1, yP−1]

  and the prediction units covering luma location (xP−1, yP) (PartIdx = 2) and luma location (xN, yN) (Cand. N) have identical motion parameters:
  - mvLX[xP−1, yP] == mvLX[xN, yN]
  - refIdxLX[xP−1, yP] == refIdxLX[xN, yN]
  - predFlagLX[xP−1, yP] == predFlagLX[xN, yN]
- Otherwise, availableFlagN is set equal to 1 and the variables mvLX[xN, yN], refIdxLX[xN, yN] and predFlagLX[xN, yN] of the prediction unit covering luma location (xN, yN) are assigned respectively to mvLXN, refIdxLXN and predFlagLXN.

For the motion vector predictor candidate list generation process, each list candidate can include more information than the motion vector value, such as the reference lists used, the reference frames used in each list and motion vector for each list.

When all motion vector candidates have been examined, one motion vector is selected to be used as the motion vector for the current block. The motion vector selector 364 may examine different motion vectors in the list and determine which motion vector provides the most efficient encoding result, or the selection of the motion vector may be based on to other criteria as well. Information of the selected motion vector is provided for the mode selector for encoding and transmission to the decoder or for storage when the mode selector determines to use inter prediction for the current block. The information may include the index of the motion vector in the list, and/or motion vector parameters or other appropriate information.

The selected motion vector and the block relating to the motion vector is used to generate the prediction representation of the image block 312 which is provided as the output of the mode selector. The output may be used by the first summing device 321 to produce the first prediction error signal 320, as was described above.

The selected motion vector predictor candidate can be modified by adding a motion vector difference or can be used directly as the motion vector of the block. Moreover, after the motion compensation is performed by using the selected motion vector predictor candidate, the residual signal of the block can be transform coded or skipped to be coded.

Although the embodiments above have been described with respect to the size of the macroblock being 16x16 pixels, it would be appreciated that the methods and apparatus described may be configured to handle macroblocks of different pixel sizes.

Amazon.com, Inc., Amazon.com Services LLC - Ex. 1017, Page 000024

In the following the operation of an example embodiment of the decoder 600 is depicted in more detail with reference to Figure 7.

At the decoder side similar operations are performed to reconstruct the image blocks. Figure 7 shows a block diagram of a video decoder 700 suitable for employing embodiments of the invention and Figures 8a and 8b show a flow diagram of an example of a method in the video decoder. The bitstream to be decoded may be received from the encoder, from a network element, from a storage medium or from another source. The decoder is aware of the structure of the bitstream so that it can determine the meaning of the entropy coded codewords and may decode the bitstream by an entropy decoder 701 which performs entropy decoding on the received signal. The entropy decoder thus performs the inverse operation to the entropy encoder 330 of the encoder described above. The entropy decoder 701 outputs the results of the entropy decoding to a prediction error decoder 702 and a pixel predictor 704.

In some embodiments the entropy coding may not be used but another channel encoding may be in use, or the encoded bitstream may be provided to the decoder 700 without channel encoding. The decoder 700 may comprise a corresponding channel decoder to obtain the encoded codewords from the received signal.

The pixel predictor 704 receives the output of the entropy decoder 701. The output of the entropy decoder 701 may include an indication on the prediction mode used in encoding the current block. A predictor selector 714 within the pixel predictor 704 determines that an intra-prediction or an inter-prediction is to be carried out. The predictor selector 714 may furthermore output a predicted representation of an image block 716 to a first combiner 713. The predicted representation of the image block 716 is used in conjunction with the reconstructed prediction error signal 712 to generate a preliminary reconstructed image 718. The preliminary reconstructed image 718 may be used in the predictor 714 or may be passed to a filter 720. The filter 720, if used, applies a filtering which outputs a final reconstructed signal 722. The final reconstructed signal 722 may be stored in a reference frame memory 724, the reference frame memory 724 further being connected to the predictor 714 for prediction operations.

Also the prediction error decoder 702 receives the output of the entropy decoder 701. A dequantizer 792 of the prediction error decoder 702 may dequantize the output of the entropy decoder 701 and the inverse transform block 793 may perform an inverse transform operation to the dequantized signal output by the dequantizer 792. The output of the entropy decoder 701 may also indicate that prediction error signal is not to be applied and in this case the prediction error decoder produces an all zero output signal.

The decoder selects the 16x16 pixel residual macroblock to reconstruct. This residual macroblock is also called as a current block.

The decoder may receive information on the encoding mode used in encoding of the current block. The indication is decoded, when necessary, and provided to the reconstruction processor 791 of the prediction selector 714. The reconstruction processor 791 examines the indication and selects one of the intra-prediction mode(s), if the indication indicates that the block has been encoded using intra-

Amazon.com, Inc., Amazon.com Services LLC - Ex. 1017, Page 000025

prediction, or the inter-prediction mode, if the indication indicates that the block has been encoded using inter-prediction.

For inter-prediction mode the reconstruction processor 791 may comprise one or more elements corresponding to the prediction processor 362 of the encoder, such as a motion vector definer, a prediction list modifier and/or a motion vector selector.

The reconstruction processor 791 initializes a motion vector prediction list to default values in block 800. As was the case in the encoding part, in this example the spatial motion prediction candidates are the spatial neighbour blocks A0, A1, B0, B1, B2 and these spatial motion prediction candidates are processed in the same predetermined order than in the encoder: A1, B1, B0, A0 and B2. The first spatial motion prediction candidate to be selected for further examination is thus A1. Before further examination is performed for the selected spatial motion prediction candidate, it is examined whether the merge list already contains a maximum number of spatial motion prediction candidates. If the number of spatial motion prediction candidates in the merge list is not less than the maximum number, the selected spatial motion prediction candidate is not included in the merge list and the process of constructing the merge list can be stopped 826. On the other hand, if the number of spatial motion prediction candidates in the merge list is less than the maximum number, a further analyses of the selected spatial motion prediction candidate is performed (blocks 804-822).

The decoder examines 804 if the prediction unit or block covering the spatial motion prediction candidate block is not available for motion prediction. If so, the candidate is not included in the merge list. The reason that the block is not available may be that the block is either coded in intra mode or resides in a different slice or outside of the picture area.

In addition to the common conditions above, for each spatial motion prediction candidate, if any of the following conditions holds, then the candidate is not included in the merge list, otherwise, it is included.

The decoder determines 806 which spatial motion prediction candidate of the set of spatial motion prediction candidates is in question. If the spatial motion prediction candidate is the block A1, one or more of the following conditions may be examined 808, 810 to determine whether to include this spatial motion prediction candidate in the merge list or not. If the current coding unit 100 is vertically split into two rectangle prediction units 103, 104 as depicted in Figure 10b and the current prediction unit is the second prediction unit 104 in the coding/decoding order (808), this spatial motion prediction candidate is not included in the merge list. If the current coding unit 100 is not vertically split into two rectangle prediction units but it is horizontally split into two rectangle prediction units 101, 102 as depicted in Figure 10a and the current prediction unit is the second prediction unit in the coding/decoding order and the block A1 has the same motion information as the block B1 (810), this spatial motion prediction candidate (block A1) is not included in the merge list. In the example of Figure 10a the second prediction unit is the lower prediction unit 102 of the coding unit 100 and in the example of Figure 10b the second prediction unit is the rightmost prediction unit 104 of the coding unit 100. If none of the conditions above is fulfilled the block A1 is included in the merge list as a spatial motion prediction candidate (824).

Amazon.com, Inc., Amazon.com Services LLC - Ex. 1017, Page 000026

If the spatial motion prediction candidate is the block B1, one or more of the following conditions may be examined 812, 814 to determine whether to include this spatial motion prediction candidate in the merge list or not. If the current coding unit 100 is horizontally split into two rectangle prediction units 101, 102 as depicted in Figure 10a and the current prediction unit is the second prediction unit 104 in the coding/decoding order (812), this spatial motion prediction candidate is not included in the merge list. If the current coding unit 100 is not horizontally split into two rectangle prediction units and if the block B1 has the same motion information than the block A1 (814), this spatial motion prediction candidate (block B1) is not included in the merge list. If none of the conditions above is fulfilled the block B1 is included in the merge list as a spatial motion prediction candidate (824).

If the spatial motion prediction candidate is the block B0, this spatial motion prediction candidate is not included in the merge list if the block B0 has the same motion information than the block B1 (816). Otherwise, if the number of spatial motion prediction candidates in the merge list is less than the maximum number of spatial motion prediction candidates, this spatial motion prediction candidate (block B0) is included in the merge list (824).

If the spatial motion prediction candidate is the block A0, this spatial motion prediction candidate is not included in the merge list if the block A0 has the same motion information than the block A1 (818). Otherwise, if the number of spatial motion prediction candidates in the merge list is less than the maximum number of spatial motion prediction candidates, this spatial motion prediction candidate (block A0) is included in the merge list (824).

If the spatial motion prediction candidate is the block B2, this spatial motion prediction candidate is not included in the merge list if the maximum number of spatial motion prediction candidates is four and the other blocks A0, A1, B0, and B1 are all decided to be included in the merge list (820). Otherwise, if the number of spatial motion prediction candidates in the merge list is less than the maximum number of spatial motion prediction candidates, the block B2 is not included in the merge list if the block B2 has the same motion information than the block B1 or the block A1 (822).

Then, after processing the blocks A1, B1, B0, A0 and B2 and including a subset of them in the merge list based on the above described conditions, no more redundancy check between these candidates are performed and remaining temporal motion prediction candidate and/or other possible additional candidates may be processed.

When the merge list has been constructed the decoder may use 828 the indication of the motion vector received from the encoder to select the motion vector for decoding the current block. The indication may be, for example, an index to the merge list.

Basically, after the reconstruction processor 791 has constructed the merge list, it would correspond with the merge list constructed by the encoder if the reconstruction processor 791 has the same information available than the encoder had. If some information has been lost during transmission the information from the encoder to the decoder, it may affect the generation of the merge list in the decoder 700.

Amazon.com, Inc., Amazon.com Services LLC - Ex. 1017, Page 000027

The above examples describe the operation mainly in the merge mode but the encoder and decoder may also operate in other modes.

The embodiments of the invention described above describe the codec in terms of separate encoder and decoder apparatus in order to assist the understanding of the processes involved. However, it would be appreciated that the apparatus, structures and operations may be implemented as a single encoder-decoder apparatus/structure/operation. Furthermore in some embodiments of the invention the coder and decoder may share some or all common elements.

Although the above examples describe embodiments of the invention operating within a codec within an electronic device, it would be appreciated that the invention as described below may be implemented as part of any video codec. Thus, for example, embodiments of the invention may be implemented in a video codec which may implement video coding over fixed or wired communication paths.

Thus, user equipment may comprise a video codec such as those described in embodiments of the invention above.

It shall be appreciated that the term user equipment is intended to cover any suitable type of wireless user equipment, such as mobile telephones, portable data processing devices or portable web browsers.

Furthermore elements of a public land mobile network (PLMN) may also comprise video codecs as described above.

In general, the various embodiments of the invention may be implemented in hardware or special purpose circuits, software, logic or any combination thereof. For example, some aspects may be implemented in hardware, while other aspects may be implemented in firmware or software which may be executed by a controller, microprocessor or other computing device, although the invention is not limited thereto. While various aspects of the invention may be illustrated and described as block diagrams, flow charts, or using some other pictorial representation, it is well understood that these blocks, apparatus, systems, techniques or methods described herein may be implemented in, as non-limiting examples, hardware, software, firmware, special purpose circuits or logic, general purpose hardware or controller or other computing devices, or some combination thereof.

The embodiments of this invention may be implemented by computer software executable by a data processor of the mobile device, such as in the processor entity, or by hardware, or by a combination of software and hardware. Further in this regard it should be noted that any blocks of the logic flow as in the Figures may represent program steps, or interconnected logic circuits, blocks and functions, or a combination of program steps and logic circuits, blocks and functions. The software may be stored on such physical media as memory chips, or memory blocks implemented within the processor, magnetic media such as hard disk or floppy disks, and optical media such as for example DVD and the data variants thereof, CD.

The memory may be of any type suitable to the local technical environment and may be implemented using any suitable data storage technology, such as semiconductor based memory devices, magnetic memory devices and systems, optical memory devices and systems, fixed memory and

Amazon.com, Inc., Amazon.com Services LLC - Ex. 1017, Page 000028

removable memory. The data processors may be of any type suitable to the local technical environment, and may include one or more of general purpose computers, special purpose computers, microprocessors, digital signal processors (DSPs) and processors based on multi core processor architecture, as non limiting examples.

Embodiments of the inventions may be practiced in various components such as integrated circuit modules. The design of integrated circuits is by and large a highly automated process. Complex and powerful software tools are available for converting a logic level design into a semiconductor circuit design ready to be etched and formed on a semiconductor substrate.

Programs, such as those provided by Synopsys, Inc. of Mountain View, California and Cadence Design, of San Jose, California automatically route conductors and locate components on a semiconductor chip using well established rules of design as well as libraries of pre stored design modules. Once the design for a semiconductor circuit has been completed, the resultant design, in a standardized electronic format (e.g., Opus, GDSII, or the like) may be transmitted to a semiconductor fabrication facility or "fab" for fabrication.

The foregoing description has provided by way of exemplary and non-limiting examples a full and informative description of the exemplary embodiment of this invention. However, various modifications and adaptations may become apparent to those skilled in the relevant arts in view of the foregoing description, when read in conjunction with the accompanying drawings and the appended claims. However, all such and similar modifications of the teachings of this invention will still fall within the scope of this invention.

In the following some examples will be provided.

In some embodiments a method comprises:

receiving a block of pixels including a prediction unit; determining a set of spatial motion vector prediction candidates for the block of pixels; the spatial motion vector prediction candidates being provided with motion information;

selecting a first spatial motion vector prediction candidate from the set of spatial motion vector prediction candidates as a potential spatial motion vector prediction candidate to be included in a merge list for the prediction unit;

determining a subset of spatial motion vector predictions based on the location of the block associated with the first spatial motion vector prediction candidate;

comparing motion information of the first spatial motion vector prediction candidate with motion information of the spatial motion vector prediction candidate in the determined subset of spatial motion vector prediction candidates;

if at least one of the comparisons indicates that the motion vector information of the spatial motion vector prediction candidates correspond with each other, excluding the first spatial motion vector prediction candidate from the merge list.

In some embodiments the method comprises including neighbouring blocks of the received block of pixels in the set of spatial motion vector prediction candidates.

Amazon.com, Inc., Amazon.com Services LLC - Ex. 1017, Page 000029

In some embodiments the method comprises constructing the set of spatial motion vector predictions by using motion vectors of one or more encoded blocks in a same frame than the block of pixels.

In some embodiments the method comprises selecting spatial motion vector prediction candidates from the set of spatial motion vector prediction candidates as the potential spatial motion vector prediction candidate in a predetermined order.

In some embodiments the method comprises comparing motion information of the potential spatial motion vector prediction candidate with motion information of at most one other spatial motion vector prediction candidate of the set of spatial motion vector prediction candidates.

In some embodiments the method comprises prediction unit and a second prediction unit; and if so, excluding the potential spatial motion vector prediction candidate from the merge list if the prediction unit is the second prediction unit.

In some embodiments the method comprises

determining a maximum number of spatial motion vector prediction candidates to be included in a merge list; and

limiting the number of spatial motion vector prediction candidates in the merge list smaller or equal to the maximum number .

In some embodiments the method comprises

examining, if the number of spatial motion vector prediction candidates in the merge list smaller than the maximum number;

if so, examining whether a prediction unit to which the potential spatial motion vector prediction candidate belongs is available for motion prediction;

if so, performing at least one of the following:

for the potential spatial motion vector prediction candidate on the left side of the prediction unit, excluding the potential spatial motion vector prediction candidate from the merge list if any of the following conditions are fulfilled:

- the received block of pixels is vertically divided into a first prediction unit and a second prediction unit, and the prediction unit is the second prediction unit;
- the received block of pixels is horizontally divided into a first prediction unit and a second prediction unit, and if the prediction unit is the second prediction unit, and the potential spatial motion vector prediction candidate has essentially similar motion information than the spatial motion vector prediction candidate above the prediction unit;

for the potential spatial motion vector prediction candidate above the prediction unit, excluding the potential spatial motion vector prediction candidate from the merge list if any of the following conditions are fulfilled:

- the received block of pixels is horizontally divided into a first prediction unit and a second prediction unit, and the prediction unit is the second prediction unit;

Amazon.com, Inc., Amazon.com Services LLC - Ex. 1017, Page 000030

- the potential spatial motion vector prediction candidate has essentially similar motion information than the spatial motion vector prediction candidate on the left side of the prediction unit;

for the potential spatial motion vector prediction candidate, which is on the right side of the potential spatial motion vector prediction candidate above the prediction unit, excluding the potential spatial motion vector prediction candidate from the merge list if the potential spatial motion vector prediction candidate has essentially similar motion information than the spatial motion vector prediction candidate above the prediction unit;

for the potential spatial motion vector prediction candidate, which is below the potential spatial motion vector prediction candidate on the left side of the prediction unit, excluding the potential spatial motion vector prediction candidate from the merge list if the potential spatial motion vector prediction candidate has essentially similar motion information than the spatial motion vector prediction candidate on the left side of the prediction unit;

for the potential spatial motion vector prediction candidate cornerwise neighbouring the prediction unit, excluding the potential spatial motion vector prediction candidate from the merge list if any of the following conditions are fulfilled:

- all the other potential spatial motion vector prediction candidates have been included in the merge list;
- the potential spatial motion vector prediction candidate has essentially similar motion information than the spatial motion vector prediction candidate above the prediction unit;
- the potential spatial motion vector prediction candidate has essentially similar motion information than the spatial motion vector prediction candidate on the left side of the prediction unit.

In some embodiments the method comprises including a temporal motion prediction candidate into the merge list.

In some embodiments the method comprises selecting one motion vector prediction candidate from the merge list to represent a motion vector prediction for the block of pixels.

In some embodiments a method according to the second aspect comprises:

receiving an encoded block of pixels including a prediction unit;

determining a set of spatial motion vector prediction candidates for the encoded block of pixels; the spatial motion vector prediction candidates being provided with motion information;

selecting a first spatial motion vector prediction candidate from the set of spatial motion vector prediction candidates as a potential spatial motion vector prediction candidate to be included in a merge list for the prediction unit;

Amazon.com, Inc., Amazon.com Services LLC - Ex. 1017, Page 000031

determining a subset of spatial motion vector predictions based on the location of the block associated with the first spatial motion vector prediction candidate;

comparing motion information of the first spatial motion vector prediction candidate with motion information of another spatial motion vector prediction candidate of the set of spatial motion vector prediction candidates;

if at least one of the comparisons indicates that the motion vector information of the spatial motion vector prediction candidates correspond with each other, excluding the first spatial motion vector prediction candidate from the merge list.

In some embodiments the method comprises including neighbouring blocks of the received encoded block of pixels in the set of spatial motion vector prediction candidates.

In some embodiments the method comprises constructing the set of spatial motion vector predictions by using motion vectors of one or more decoded blocks in a same frame than the received encoded block of pixels.

In some embodiments the method comprises selecting spatial motion vector prediction candidates from the set of spatial motion vector prediction candidates as the potential spatial motion vector prediction candidate in a predetermined order.

In some embodiments the method comprises comparing motion information of the potential spatial motion vector prediction candidate with motion information of at most one other spatial motion vector prediction candidate of the set of spatial motion vector prediction candidates.

In some embodiments the method comprises examining whether the received encoded block of pixels is divided into a first prediction unit and a second prediction unit; and if so, excluding the potential spatial motion vector prediction candidate from the merge list if the prediction unit is the second prediction unit.

In some embodiments the method comprises

determining a maximum number of spatial motion vector prediction candidates to be included in a merge list; and

limiting the number of spatial motion vector prediction candidates in the merge list smaller or equal to the maximum number.

In some embodiments the method comprises

examining, if the number of spatial motion vector prediction candidates in the merge list smaller than the maximum number;

if so, examining whether a prediction unit to which the potential spatial motion vector prediction candidate belongs is available for motion prediction;

if so, performing at least one of the following:

for the potential spatial motion vector prediction candidate on the left side of the prediction unit, excluding the potential spatial motion vector prediction candidate from the merge list if any of the following conditions are fulfilled:

Amazon.com, Inc., Amazon.com Services LLC - Ex. 1017, Page 000032

- the received encoded block of pixels is vertically divided into a first prediction unit and a second prediction unit, and the prediction unit is the second prediction unit;
- the received encoded block of pixels is horizontally divided into a first prediction unit and a second prediction unit, and if the prediction unit is the second prediction unit, and the potential spatial motion vector prediction candidate has essentially similar motion information than the spatial motion vector prediction candidate above the prediction unit;

for the potential spatial motion vector prediction candidate above the prediction unit, excluding the potential spatial motion vector prediction candidate from the merge list if any of the following conditions are fulfilled:

- the received encoded block of pixels is horizontally divided into a first prediction unit and a second prediction unit, and the prediction unit is the second prediction unit;
- the potential spatial motion vector prediction candidate has essentially similar motion information than the spatial motion vector prediction candidate on the left side of the prediction unit;

for the potential spatial motion vector prediction candidate, which is on the right side of the potential spatial motion vector prediction candidate above the prediction unit, excluding the potential spatial motion vector prediction candidate from the merge list if the potential spatial motion vector prediction candidate has essentially similar motion information than the spatial motion vector prediction candidate above the prediction unit;

for the potential spatial motion vector prediction candidate, which is below the potential spatial motion vector prediction candidate on the left side of the prediction unit, excluding the potential spatial motion vector prediction candidate from the merge list if the potential spatial motion vector prediction candidate has essentially similar motion information than the spatial motion vector prediction candidate on the left side of the prediction unit;

for the potential spatial motion vector prediction candidate cornerwise neighbouring the prediction unit, excluding the potential spatial motion vector prediction candidate from the merge list if any of the following conditions are fulfilled:

- all the other potential spatial motion vector prediction candidates have been included in the merge list;
- the potential spatial motion vector prediction candidate has essentially similar motion information than the spatial motion vector prediction candidate above the prediction unit;
- the potential spatial motion vector prediction candidate has essentially similar motion information than the spatial motion vector prediction candidate on the left side of the prediction unit.

Amazon.com, Inc., Amazon.com Services LLC - Ex. 1017, Page 000033

In some embodiments the method comprises including a temporal motion prediction candidate into the merge list.

In some embodiments the method comprises selecting one motion vector prediction candidate from the merge list to represent a motion vector prediction for the received encoded block of pixels.

In some embodiments an apparatus according to the third aspect comprises a processor and a memory including computer program code, the memory and the computer program code configured to, with the processor, cause the apparatus to:

receive a block of pixels including a prediction unit;

determining a set of spatial motion vector prediction candidates for the block of pixels; the spatial motion vector prediction candidates being provided with motion information;

selecting a first spatial motion vector prediction candidate from the set of spatial motion vector prediction candidates as a potential spatial motion vector prediction candidate to be included in a merge list for the prediction unit;

determining a subset of spatial motion vector predictions based on the location of the block associated with the first spatial motion vector prediction candidate;

comparing motion information of the first spatial motion vector prediction candidate with motion information of the spatial motion vector prediction candidate in the determined subset of spatial motion vector prediction candidates;

if at least one the comparisons indicates that the motion vector information of the spatial motion vector prediction candidates correspond with each other, excluding the first spatial motion vector prediction candidate from the merge list.

In some embodiments an apparatus according to the fourth aspect comprises a processor and a memory including computer program code, the memory and the computer program code configured to, with the processor, cause the apparatus to:

receive an encoded block of pixels including a prediction unit;

determine a set of spatial motion vector prediction candidates for the encoded block of pixels; the spatial motion vector prediction candidates being provided with motion information;

select a first spatial motion vector prediction candidate from the set of spatial motion vector prediction candidates as a potential spatial motion vector prediction candidate to be included in a merge list for the prediction unit;

determine a subset of spatial motion vector predictions based on the location of the block associated with the first spatial motion vector prediction candidate;

compare motion information of the first spatial motion vector prediction candidate with motion information of the spatial motion vector prediction candidate in the determined subset of spatial motion vector prediction candidates;

Amazon.com, Inc., Amazon.com Services LLC - Ex. 1017, Page 000034

exclude the first spatial motion vector prediction candidate from the merge list, if at least one of the comparisons indicates that the motion vector information of the spatial motion vector prediction candidates correspond with each other

In some embodiments a storage medium having stored thereon a computer program code a computer executable program code for use by an encoder, said program codes comprise instructions for use by an encoder, said program code comprises instructions for:

receiving a block of pixels including a prediction unit;

determining a set of spatial motion vector prediction candidates for the block of pixels; the spatial motion vector prediction candidates being provided with motion information;

selecting a first spatial motion vector prediction candidate from the set of spatial motion vector prediction candidates as a potential spatial motion vector prediction candidate to be included in a merge list for the prediction unit;

determining a subset of spatial motion vector predictions based on the location of the block associated with the first spatial motion vector prediction candidate;

comparing motion information of the first spatial motion vector prediction candidate with motion information of the spatial motion vector prediction candidate in the determined subset of spatial motion vector prediction candidates;

if at least one of the comparisons indicates that the motion vector information of the spatial motion vector prediction candidates correspond with each other, excluding the first spatial motion vector prediction candidate from the merge list.

In some embodiments a storage medium having stored thereon a computer program code a computer executable program code for use by an encoder, said program codes comprise instructions for use by an encoder, said program code comprises instructions for:

receiving an encoded block of pixels including a prediction unit;

determining a set of spatial motion vector prediction candidates for the encoded block of pixels; the spatial motion vector prediction candidates being provided with motion information;

selecting a first spatial motion vector prediction candidate from the set of spatial motion vector prediction candidates as a potential spatial motion vector prediction candidate to be included in a merge list for the prediction unit;

determining a subset of spatial motion vector predictions based on the location of the block associated with the first spatial motion vector prediction candidate;

comparing motion information of the first spatial motion vector prediction candidate with motion information of the spatial motion vector prediction candidate in the determined subset of spatial motion vector prediction candidates;

if at least one of the comparisons indicates that the motion vector information of the spatial motion vector prediction candidates correspond with each other, excluding the first spatial motion vector prediction candidate from the merge list.

In some embodiments an apparatus comprises:

Amazon.com, Inc., Amazon.com Services LLC - Ex. 1017, Page 000035

means for receiving a block of pixels including a prediction unit;

means for selecting a first spatial motion vector prediction candidate from the set of spatial motion vector prediction candidates as a potential spatial motion vector prediction candidate to be included in a merge list for the prediction unit;

means for determining a subset of spatial motion vector predictions based on the location of the block associated with the first spatial motion vector prediction candidate;

means for comparing motion information of the first spatial motion vector prediction candidate with motion information of the spatial motion vector prediction candidate in the determined subset of spatial motion vector prediction candidates;

means for excluding the first spatial motion vector prediction candidate from the merge list, if at least one of the comparisons indicates that the motion vector information of the spatial motion vector prediction candidates correspond with each other.

In some embodiments an apparatus comprises:

means for receiving an encoded block of pixels including a prediction unit;

means for determining a set of spatial motion vector prediction candidates for the encoded block of pixels; the spatial motion vector prediction candidates being provided with motion information;

means for selecting a first spatial motion vector prediction candidate from the set of spatial motion vector prediction candidates as a potential spatial motion vector prediction candidate to be included in a merge list for the prediction unit;

means for determining a subset of spatial motion vector predictions based on the location of the block associated with the first spatial motion vector prediction candidate;

means for comparing motion information of the first spatial motion vector prediction candidate with motion information of the spatial motion vector prediction candidate in the determined subset of spatial motion vector prediction candidates;

means for excluding the first spatial motion vector prediction candidate from the merge list, if at least one of the comparisons indicates that the motion vector information of the spatial motion vector prediction candidates correspond with each other.

Amazon.com, Inc., Amazon.com Services LLC - Ex. 1017, Page 000036

Claims:

1. A method comprising:

receiving a block of pixels including a prediction unit;

determining a set of spatial motion vector prediction candidates for the block of pixels; the spatial motion vector prediction candidates being provided with motion information;

selecting a first spatial motion vector prediction candidate from the set of spatial motion vector prediction candidates as a potential spatial motion vector prediction candidate to be included in a merge list for the prediction unit;

determining a subset of spatial motion vector predictions based on the location of the block associated with the first spatial motion vector prediction candidate;

comparing motion information of the first spatial motion vector prediction candidate with motion information of the spatial motion vector prediction candidate in the determined subset of spatial motion vector prediction candidates;

if at least one of the comparisons indicates that the motion vector information of the spatial motion vector prediction candidates correspond with each other, excluding the first spatial motion vector prediction candidate from the merge list.

2. The method according to claim 1 comprising selecting spatial motion vector prediction candidates from the set of spatial motion vector prediction candidates as the potential spatial motion vector prediction candidate in a predetermined order.

3. The method according to claim 1 or 2, comprising comparing motion information of the potential spatial motion vector prediction candidate with motion information of at most one other spatial motion vector prediction candidate of the set of spatial motion vector prediction candidates.

4. The method according to any of the claims 1 to 3 comprising examining whether the received block of pixels is divided into a first prediction unit and a second prediction unit; and if so, excluding the potential spatial motion vector prediction candidate from the merge list if the prediction unit is the second prediction unit.

5. The method according to any of the claims 1 to 4, further comprising

determining a maximum number of spatial motion vector prediction candidates to be included in a merge list; and

limiting the number of spatial motion vector prediction candidates in the merge list smaller or equal to the maximum number .

6. The method according to any of the claims 1 to 5 comprising:

Amazon.com, Inc., Amazon.com Services LLC - Ex. 1017, Page 000037

examining, if the number of spatial motion vector prediction candidates in the merge list smaller than the maximum number;

if so, examining whether a prediction unit to which the potential spatial motion vector prediction candidate belongs is available for motion prediction;

if so, performing at least one of the following:

for the potential spatial motion vector prediction candidate on the left side of the prediction unit, excluding the potential spatial motion vector prediction candidate from the merge list if any of the following conditions are fulfilled:

- the received block of pixels is vertically divided into a first prediction unit and a second prediction unit, and the prediction unit is the second prediction unit;
- the received block of pixels is horizontally divided into a first prediction unit and a second prediction unit, and if the prediction unit is the second prediction unit, and the potential spatial motion vector prediction candidate has essentially similar motion information than the spatial motion vector prediction candidate above the prediction unit;

for the potential spatial motion vector prediction candidate above the prediction unit, excluding the potential spatial motion vector prediction candidate from the merge list if any of the following conditions are fulfilled:

- the received block of pixels is horizontally divided into a first prediction unit and a second prediction unit, and the prediction unit is the second prediction unit;
- the potential spatial motion vector prediction candidate has essentially similar motion information than the spatial motion vector prediction candidate on the left side of the prediction unit;

for the potential spatial motion vector prediction candidate, which is on the right side of the potential spatial motion vector prediction candidate above the prediction unit, excluding the potential spatial motion vector prediction candidate from the merge list if the potential spatial motion vector prediction candidate has essentially similar motion information than the spatial motion vector prediction candidate above the prediction unit;

for the potential spatial motion vector prediction candidate, which is below the potential spatial motion vector prediction candidate on the left side of the prediction unit, excluding the potential spatial motion vector prediction candidate from the merge list if the potential spatial motion vector prediction candidate has essentially similar motion information than the spatial motion vector prediction candidate on the left side of the prediction unit;

for the potential spatial motion vector prediction candidate cornerwise neighbouring the prediction unit, excluding the potential spatial motion vector prediction candidate from the merge list if any of the following conditions are fulfilled:

- all the other potential spatial motion vector prediction candidates have been included in the merge list;

Amazon.com, Inc., Amazon.com Services LLC - Ex. 1017, Page 000038

– the potential spatial motion vector prediction candidate has essentially similar motion information than the spatial motion vector prediction candidate above the prediction unit;

– the potential spatial motion vector prediction candidate has essentially similar motion information than the spatial motion vector prediction candidate on the left side of the prediction unit.

7. The method according to any of the claims 1 to 6 further comprising including a temporal motion prediction candidate into the merge list.

8. The method according to any of the claims 1 to 7 comprising selecting one motion vector prediction candidate from the merge list to represent a motion vector prediction for the block of pixels.

9. A method comprising:

receiving an encoded block of pixels including a prediction unit;

determining a set of spatial motion vector prediction candidates for the encoded block of pixels; the spatial motion vector prediction candidates being provided with motion information;

selecting a first spatial motion vector prediction candidate from the set of spatial motion vector prediction candidates as a potential spatial motion vector prediction candidate to be included in a merge list for the prediction unit;

determining a subset of spatial motion vector predictions based on the location of the block associated with the first spatial motion vector prediction candidate;

comparing motion information of the first spatial motion vector prediction candidate with motion information of another spatial motion vector prediction candidate of the set of spatial motion vector prediction candidates;

if at least one of the comparisons indicates that the motion vector information of the spatial motion vector prediction candidates correspond with each other, excluding the first spatial motion vector prediction candidate from the merge list.

10. The method according to claim 9 comprising comparing motion information of the potential spatial motion vector prediction candidate with motion information of at most one other spatial motion vector prediction candidate of the set of spatial motion vector prediction candidates.

11. The method according to claim 9 or 10 comprising examining whether the received encoded block of pixels is divided into a first prediction unit and a second prediction unit; and if so, excluding the potential spatial motion vector prediction candidate from the merge list if the prediction unit is the second prediction unit.

Amazon.com, Inc., Amazon.com Services LLC - Ex. 1017, Page 000039

12. The method according to any of the claims 9 to 11, further comprising

determining a maximum number of spatial motion vector prediction candidates to be included in a merge list; and

limiting the number of spatial motion vector prediction candidates in the merge list smaller or equal to the maximum number.

13. The method according to any of the claims 9 to 12 comprising:

examining, if the number of spatial motion vector prediction candidates in the merge list smaller than the maximum number;

if so, examining whether a prediction unit to which the potential spatial motion vector prediction candidate belongs is available for motion prediction;

if so, performing at least one of the following:

for the potential spatial motion vector prediction candidate on the left side of the prediction unit, excluding the potential spatial motion vector prediction candidate from the merge list if any of the following conditions are fulfilled:

- the received encoded block of pixels is vertically divided into a first prediction unit and a second prediction unit, and the prediction unit is the second prediction unit;
- the received encoded block of pixels is horizontally divided into a first prediction unit and a second prediction unit, and if the prediction unit is the second prediction unit, and the potential spatial motion vector prediction candidate has essentially similar motion information than the spatial motion vector prediction candidate above the prediction unit;

for the potential spatial motion vector prediction candidate above the prediction unit, excluding the potential spatial motion vector prediction candidate from the merge list if any of the following conditions are fulfilled:

- the received encoded block of pixels is horizontally divided into a first prediction unit and a second prediction unit, and the prediction unit is the second prediction unit;
- the potential spatial motion vector prediction candidate has essentially similar motion information than the spatial motion vector prediction candidate on the left side of the prediction unit;

for the potential spatial motion vector prediction candidate, which is on the right side of the potential spatial motion vector prediction candidate above the prediction unit, excluding the potential spatial motion vector prediction candidate from the merge list if the potential spatial motion vector prediction candidate has essentially similar motion information than the spatial motion vector prediction candidate above the prediction unit;

Amazon.com, Inc., Amazon.com Services LLC - Ex. 1017, Page 000040

for the potential spatial motion vector prediction candidate, which is below the potential spatial motion vector prediction candidate on the left side of the prediction unit, excluding the potential spatial motion vector prediction candidate from the merge list if the potential spatial motion vector prediction candidate has essentially similar motion information than the spatial motion vector prediction candidate on the left side of the prediction unit;

for the potential spatial motion vector prediction candidate cornerwise neighbouring the prediction unit, excluding the potential spatial motion vector prediction candidate from the merge list if any of the following conditions are fulfilled:

- all the other potential spatial motion vector prediction candidates have been included in the merge list;
- the potential spatial motion vector prediction candidate has essentially similar motion information than the spatial motion vector prediction candidate above the prediction unit;
- the potential spatial motion vector prediction candidate has essentially similar motion information than the spatial motion vector prediction candidate on the left side of the prediction unit.

14. The method according to any of the claims 9 to 13 comprising selecting one motion vector prediction candidate from the merge list to represent a motion vector prediction for the received encoded block of pixels.

15. An apparatus comprising a processor and a memory including computer program code, the memory and the computer program code configured to, with the processor, cause the apparatus to:

receiving a block of pixels including a prediction unit;

determining a set of spatial motion vector prediction candidates for the block of pixels; the spatial motion vector prediction candidates being provided with motion information;

selecting a first spatial motion vector prediction candidate from the set of spatial motion vector prediction candidates as a potential spatial motion vector prediction candidate to be included in a merge list for the prediction unit;

determining a subset of spatial motion vector predictions based on the location of the block associated with the first spatial motion vector prediction candidate;

comparing motion information of the first spatial motion vector prediction candidate with motion information of the spatial motion vector prediction candidate in the determined subset of spatial motion vector prediction candidates;

if at least one the comparisons indicates that the motion vector information of the spatial motion vector prediction candidates correspond with each other, excluding the first spatial motion vector prediction candidate from the merge list.

Amazon.com, Inc., Amazon.com Services LLC - Ex. 1017, Page 000041

16. An apparatus comprising a processor and a memory including computer program code, the memory and the computer program code configured to, with the processor, cause the apparatus to:

receive an encoded block of pixels including a prediction unit;

determine a set of spatial motion vector prediction candidates for the encoded block of pixels; the spatial motion vector prediction candidates being provided with motion information;

select a first spatial motion vector prediction candidate from the set of spatial motion vector prediction candidates as a potential spatial motion vector prediction candidate to be included in a merge list for the prediction unit;

determine a subset of spatial motion vector predictions based on the location of the block associated with the first spatial motion vector prediction candidate;

compare motion information of the first spatial motion vector prediction candidate with motion information of the spatial motion vector prediction candidate in the determined subset of spatial motion vector prediction candidates;

exclude the first spatial motion vector prediction candidate from the merge list, if at least one of the comparisons indicates that the motion vector information of the spatial motion vector prediction candidates correspond with each other

17. A storage medium having stored thereon a computer executable program code for use by an encoder, said program codes comprise instructions for use by an encoder, said program code comprises instructions for:

receiving a block of pixels including a prediction unit;

determining a set of spatial motion vector prediction candidates for the block of pixels; the spatial motion vector prediction candidates being provided with motion information;

selecting a first spatial motion vector prediction candidate from the set of spatial motion vector prediction candidates as a potential spatial motion vector prediction candidate to be included in a merge list for the prediction unit;

determining a subset of spatial motion vector predictions based on the location of the block associated with the first spatial motion vector prediction candidate;

comparing motion information of the first spatial motion vector prediction candidate with motion information of the spatial motion vector prediction candidate in the determined subset of spatial motion vector prediction candidates;

if at least one of the comparisons indicates that the motion vector information of the spatial motion vector prediction candidates correspond with each other, excluding the first spatial motion vector prediction candidate from the merge list.

18. A storage medium having stored thereon a computer executable program code for use by an encoder, said program codes comprise instructions for use by an encoder, said program code comprises instructions for:

Amazon.com, Inc., Amazon.com Services LLC - Ex. 1017, Page 000042

receiving an encoded block of pixels including a prediction unit;

determining a set of spatial motion vector prediction candidates for the encoded block of pixels; the spatial motion vector prediction candidates being provided with motion information;

selecting a first spatial motion vector prediction candidate from the set of spatial motion vector prediction candidates as a potential spatial motion vector prediction candidate to be included in a merge list for the prediction unit;

determining a subset of spatial motion vector predictions based on the location of the block associated with the first spatial motion vector prediction candidate;

comparing motion information of the first spatial motion vector prediction candidate with motion information of the spatial motion vector prediction candidate in the determined subset of spatial motion vector prediction candidates;

if at least one of the comparisons indicates that the motion vector information of the spatial motion vector prediction candidates correspond with each other, excluding the first spatial motion vector prediction candidate from the merge list.

19. An apparatus comprising:

means for receiving a block of pixels including a prediction unit;

means for determining a set of spatial motion vector prediction candidates for the block of pixels; the spatial motion vector prediction candidates being provided with motion information;

means for selecting a first spatial motion vector prediction candidate from the set of spatial motion vector prediction candidates as a potential spatial motion vector prediction candidate to be included in a merge list for the prediction unit;

means for determining a subset of spatial motion vector predictions based on the location of the block associated with the first spatial motion vector prediction candidate;

means for comparing motion information of the first spatial motion vector prediction candidate with motion information of the spatial motion vector prediction candidate in the determined subset of spatial motion vector prediction candidates;

means for excluding the first spatial motion vector prediction candidate from the merge list, if at least one of the comparisons indicates that the motion vector information of the spatial motion vector prediction candidates correspond with each other.

20. An apparatus comprising:

means for receiving an encoded block of pixels including a prediction unit;

means for determining a set of spatial motion vector prediction candidates for the encoded block of pixels; the spatial motion vector prediction candidates being provided with motion information;

means for selecting a first spatial motion vector prediction candidate from the set of spatial motion vector prediction candidates as a potential spatial motion vector prediction candidate to be included in a merge list for the prediction unit;

Amazon.com, Inc., Amazon.com Services LLC - Ex. 1017, Page 000043

means for determining a subset of spatial motion vector predictions based on the location of the block associated with the first spatial motion vector prediction candidate;

means for comparing motion information of the first spatial motion vector prediction candidate with motion information of the spatial motion vector prediction candidate in the determined subset of spatial motion vector prediction candidates;

means for excluding the first spatial motion vector prediction candidate from the merge list, if at least one of the comparisons indicates that the motion vector information of the spatial motion vector prediction candidates correspond with each other.

Amazon.com, Inc., Amazon.com Services LLC - Ex. 1017, Page 000044

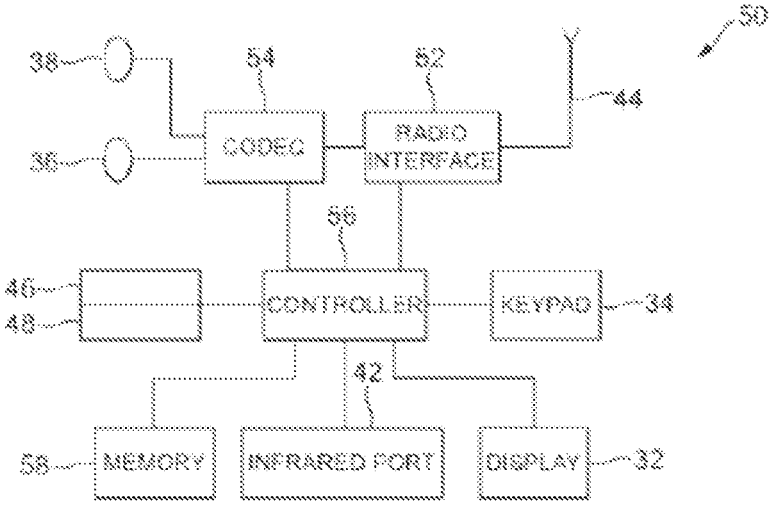
50
38
54
52
44
36
CODEC
RADIO INTERFACE
56
46
48
CONTROLLER
KEYPAD
34
42
58
MEMORY
INFRARED PORT
DISPLAY
32

FIG.1

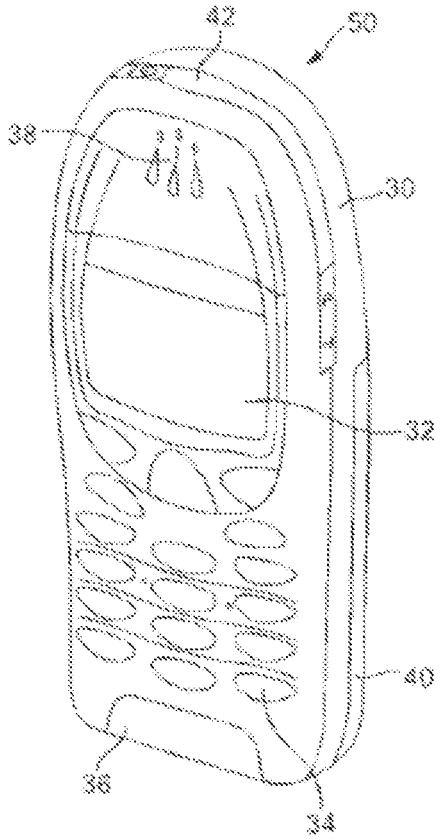
42
50
38
30
32
40
36
34

FIG. 2

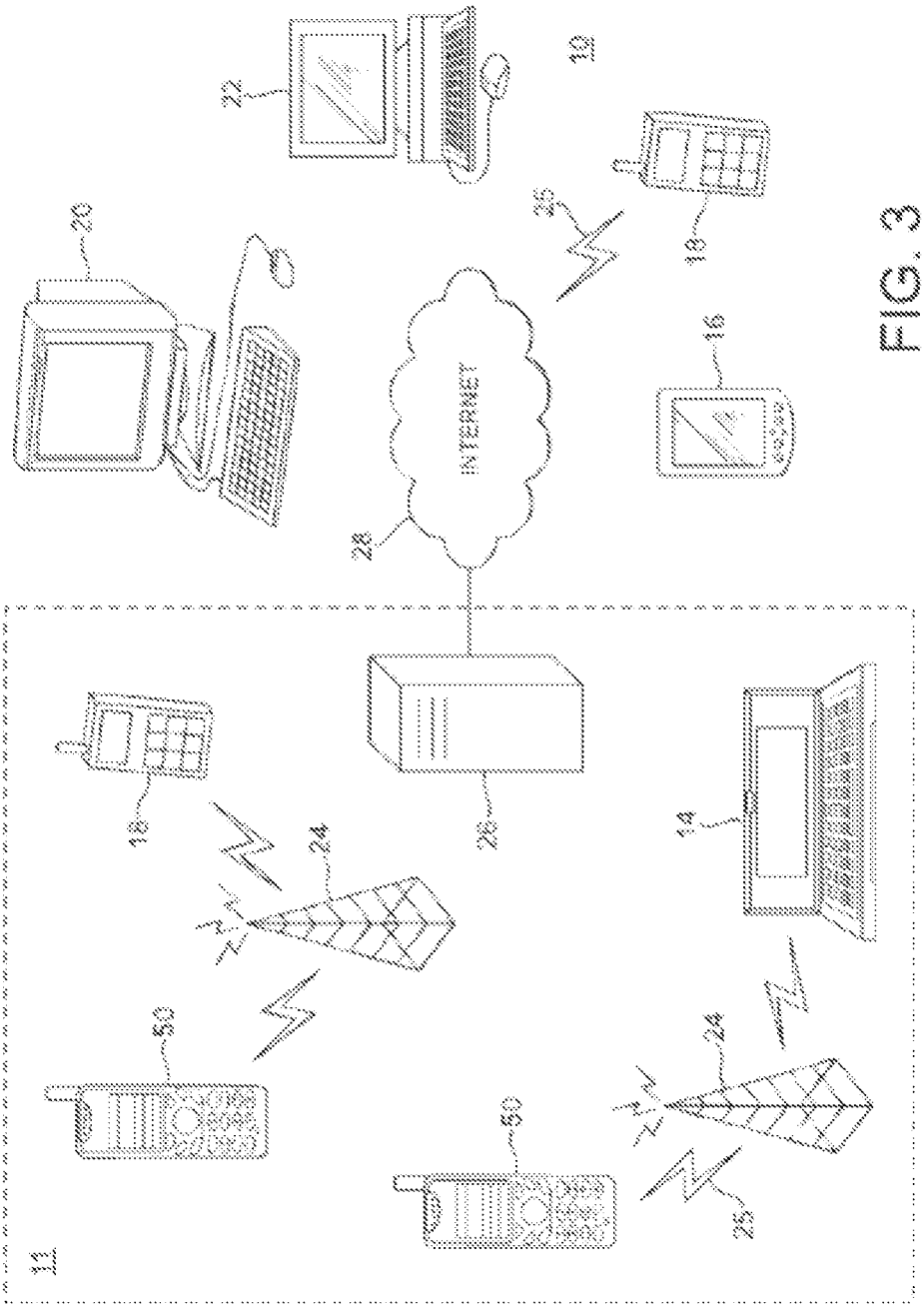

FIG. 3

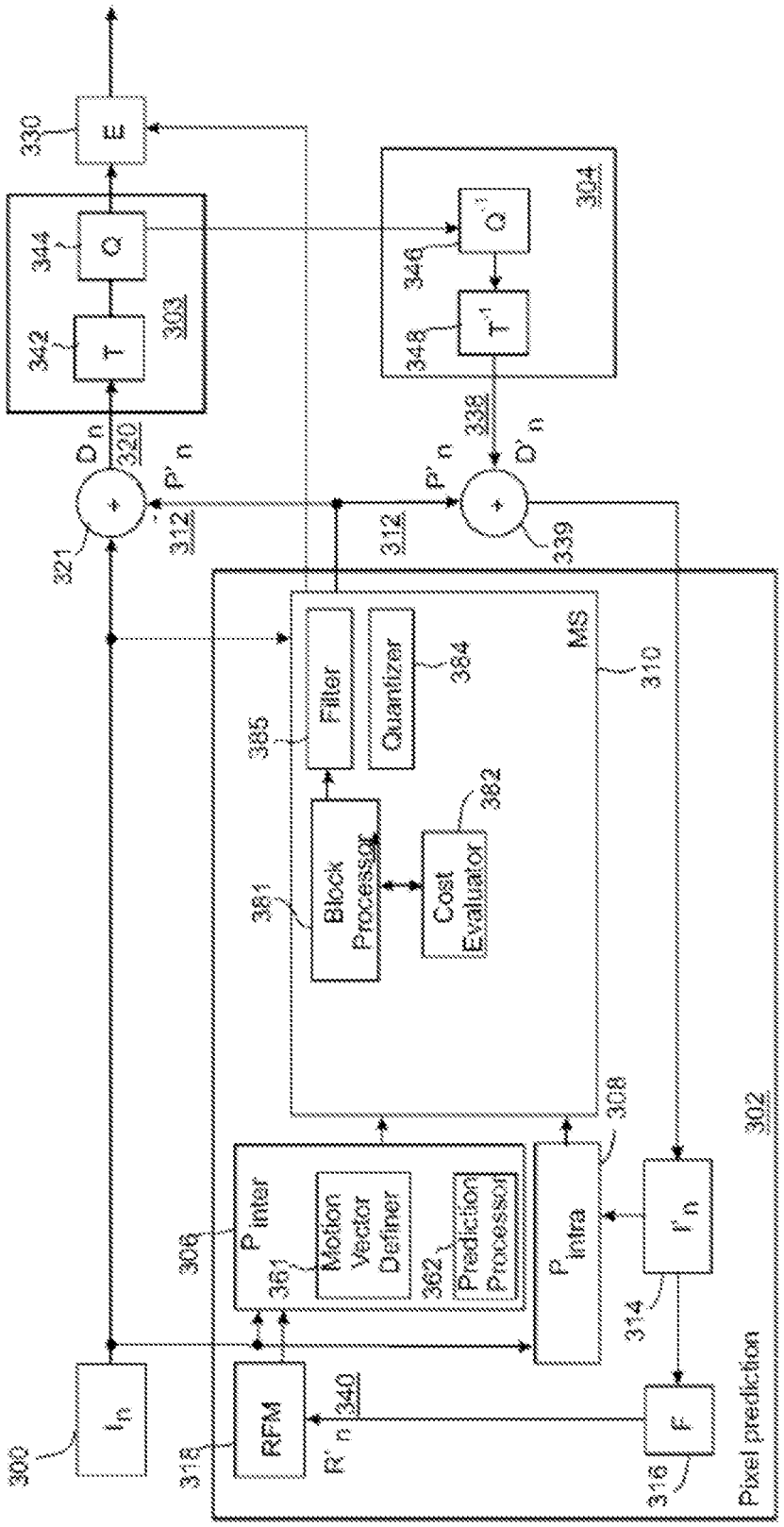
330
E
344
Q
342
T
303
304
346
Q⁻¹
348
T⁻¹
D n
320
P' n
338
D' n
321
312
339
MS
310
385
Filter
Quantizer
384
381
Block Processor
Cost Evaluator
382
308
306
P inter
381
Motion Vector Definer
382
Prediction Processor
P intra
F' n
314
302
I n
318
RFM
R' n
340
F
316
Pixel prediction

Fig. 4a

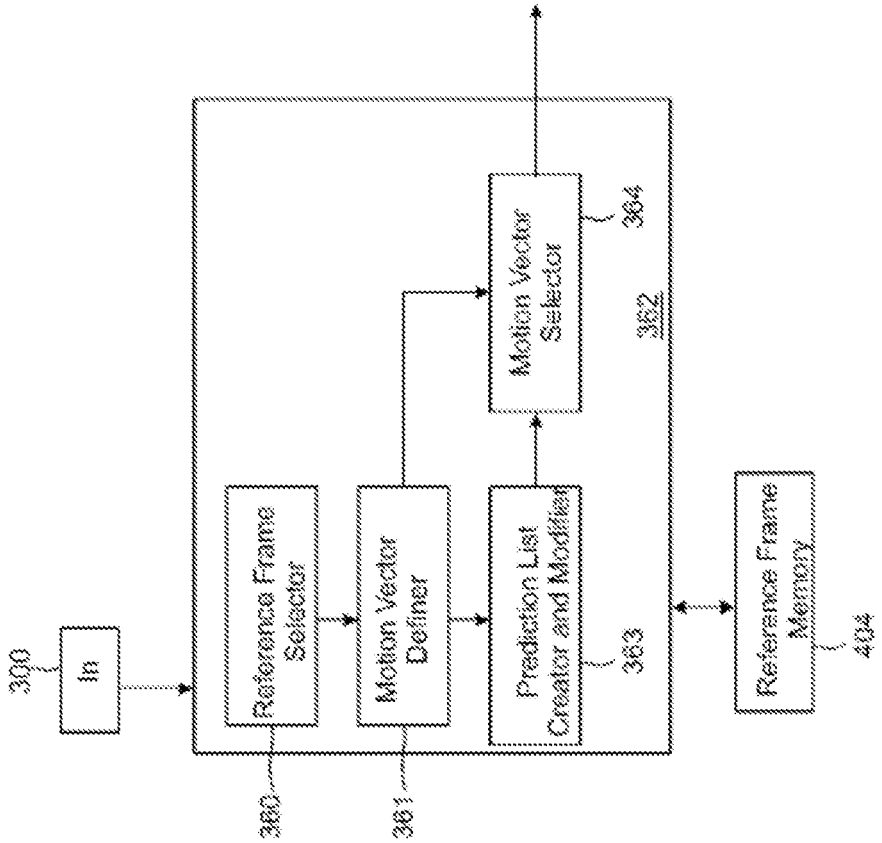
300
In
Reference Frame Selector
360
Motion Vector Definer
361
Prediction List Creator and Modifier
363
Motion Vector Selector
364
362
Reference Frame Memory
404

Fig. 4b

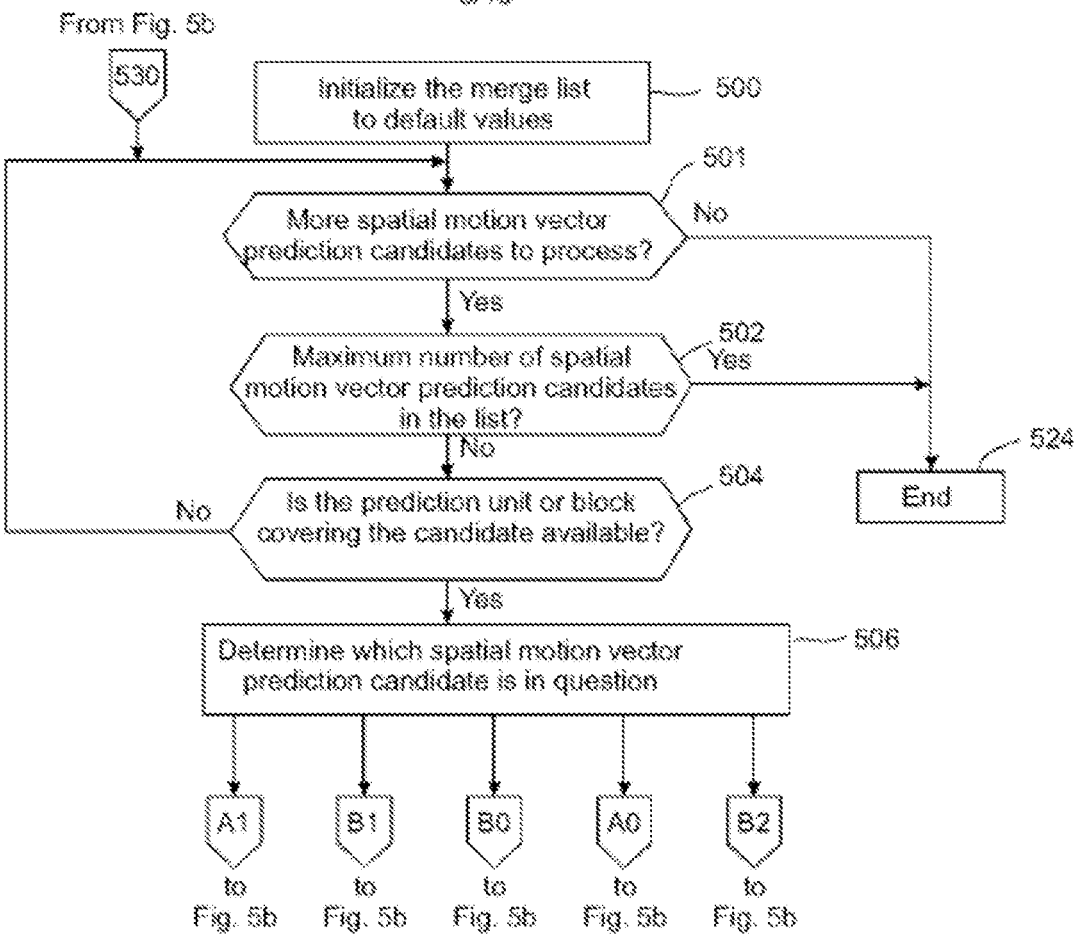
From Fig. 5b
530
Initialize the merge list to default values
500
501
More spatial motion vector prediction candidates to process?
No
Yes
502
Maximum number of spatial motion vector prediction candidates in the list?
Yes
No
524
End
504
Is the prediction unit or block covering the candidate available?
No
Yes
506
Determine which spatial motion vector prediction candidate is in question
A1
B1
B0
A0
B2
to Fig. 5b
to Fig. 5b
to Fig. 5b
to Fig. 5b
to Fig. 5b

Fig. 5a

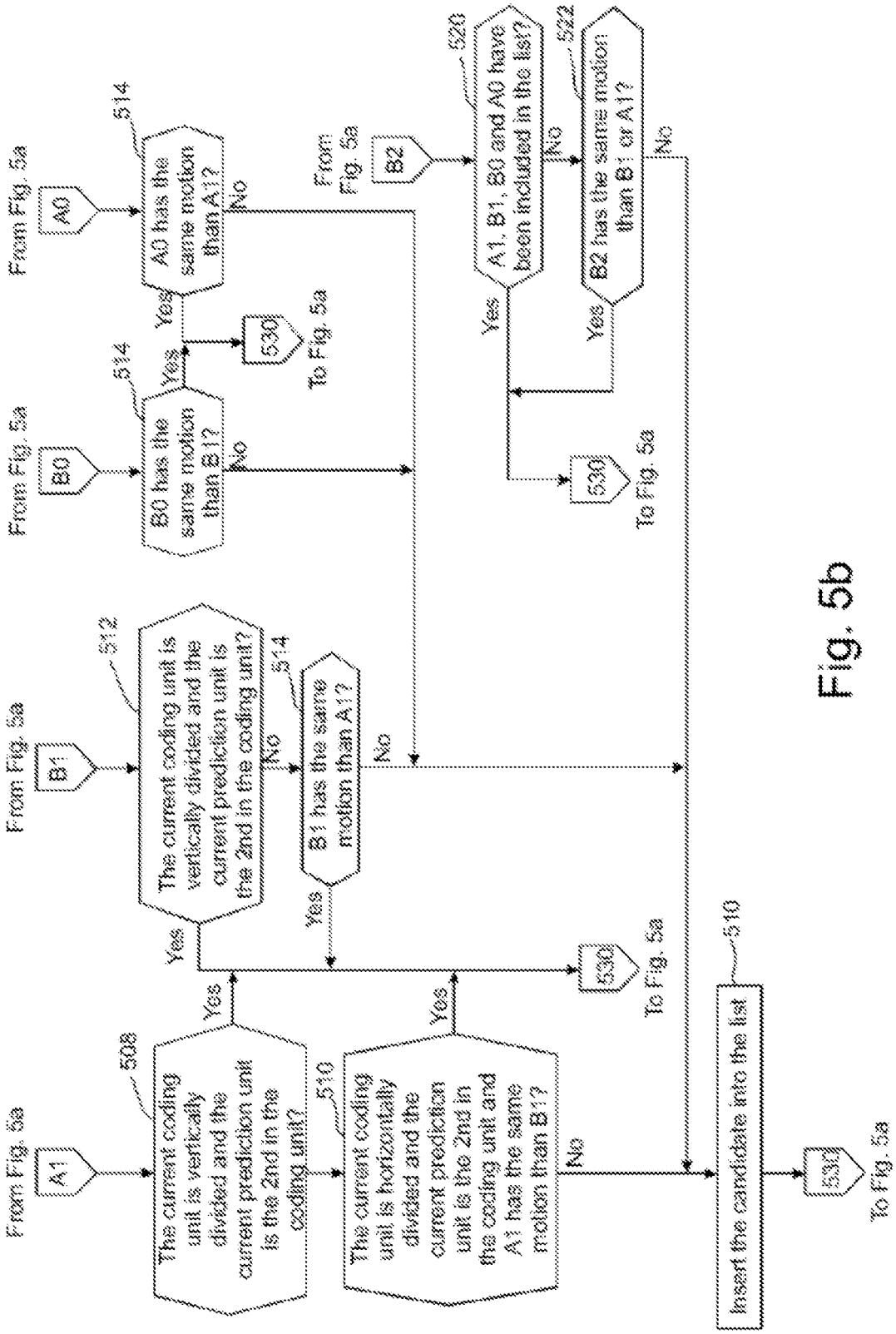
From Fig. 5a
A1
508
The current coding unit is vertically divided and the current prediction unit is the 2nd in the coding unit?
Yes
No
From Fig. 5a
B1
512
The current coding unit is vertically divided and the current prediction unit is the 2nd in the coding unit?
Yes
No
514
B1 has the same motion than A1?
Yes
No
530
To Fig. 5a
510
The current coding unit is horizontally divided and the current prediction unit is the 2nd in the coding unit and A1 has the same motion than B1?
Yes
No
From Fig. 5a
B0
514
B0 has the same motion than B1?
Yes
No
530
To Fig. 5a
From Fig. 5a
A0
514
A0 has the same motion than A1?
Yes
No
530
To Fig. 5a
From Fig. 5a
B2
520
A1, B1, B0 and A0 have been included in the list?
Yes
No
522
B2 has the same motion than B1 or A1?
Yes
No
530
To Fig. 5a
510
Insert the candidate into the list
530
To Fig. 5a

Fig. 5b

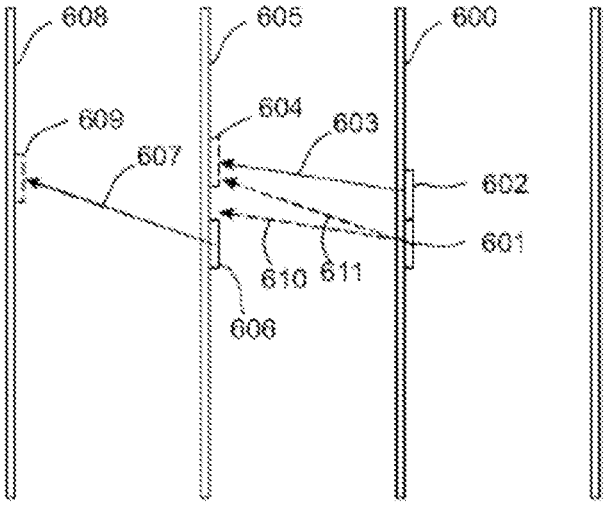
608
605
600
609
604
603
607
602
601
610
611
606

Fig. 6a

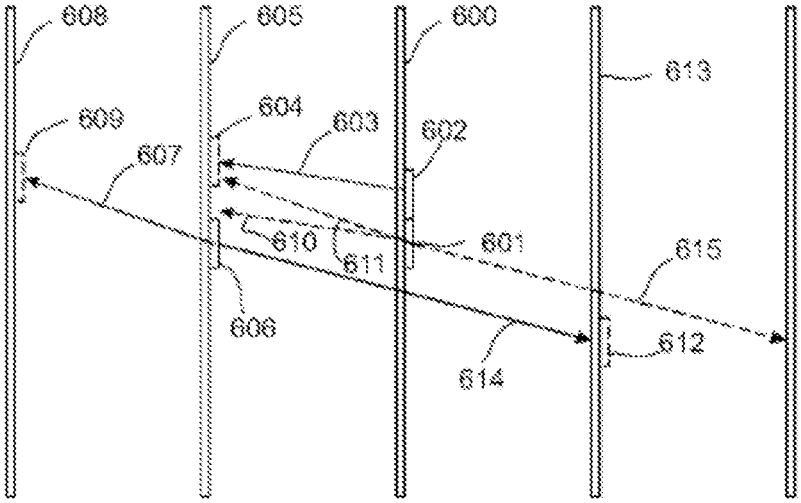
608
605
600
613
609
604
603
602
607
610
611
601
615
606
612
614

Fig. 6b

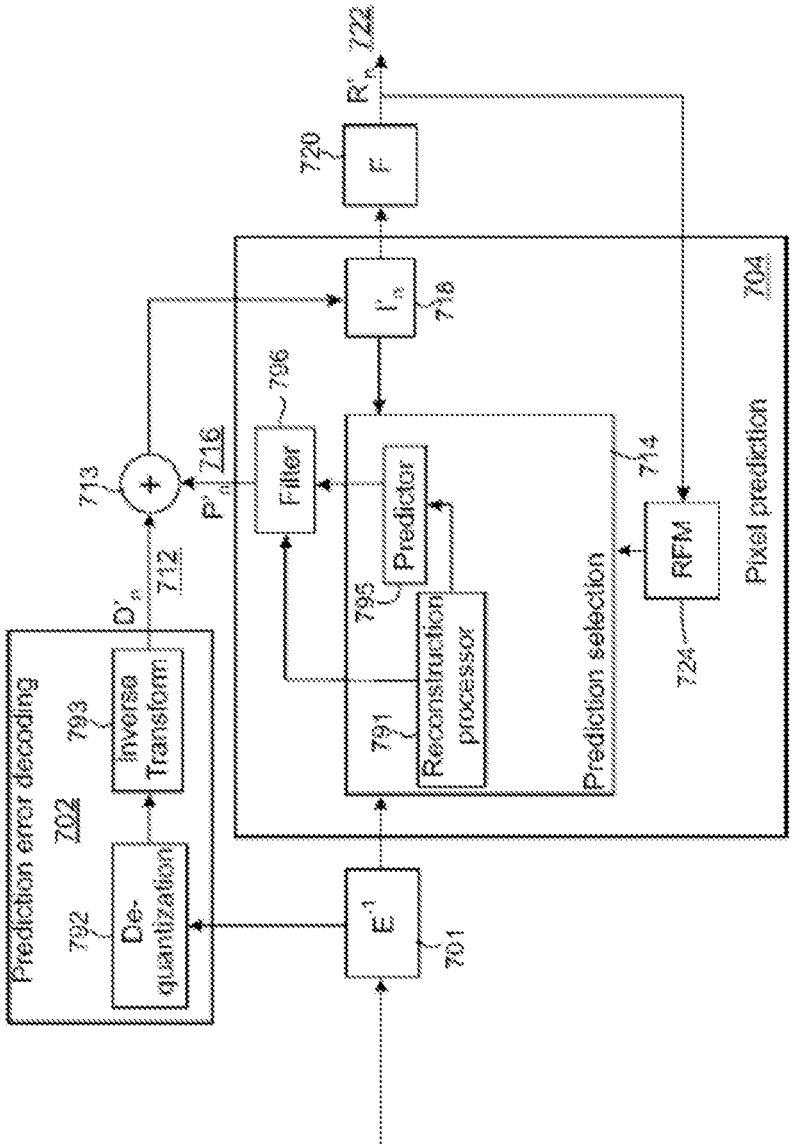
Prediction error decoding
702
792
De-quantization
793
Inverse Transform
D'_n
712
713
P'_n
716
796
Filter
795
Predictor
791
Reconstruction processor
Prediction selection
714
RFM
724
Pixel prediction
704
E^{-1}
701
R'_n
718
F
720
722

Fig. 7

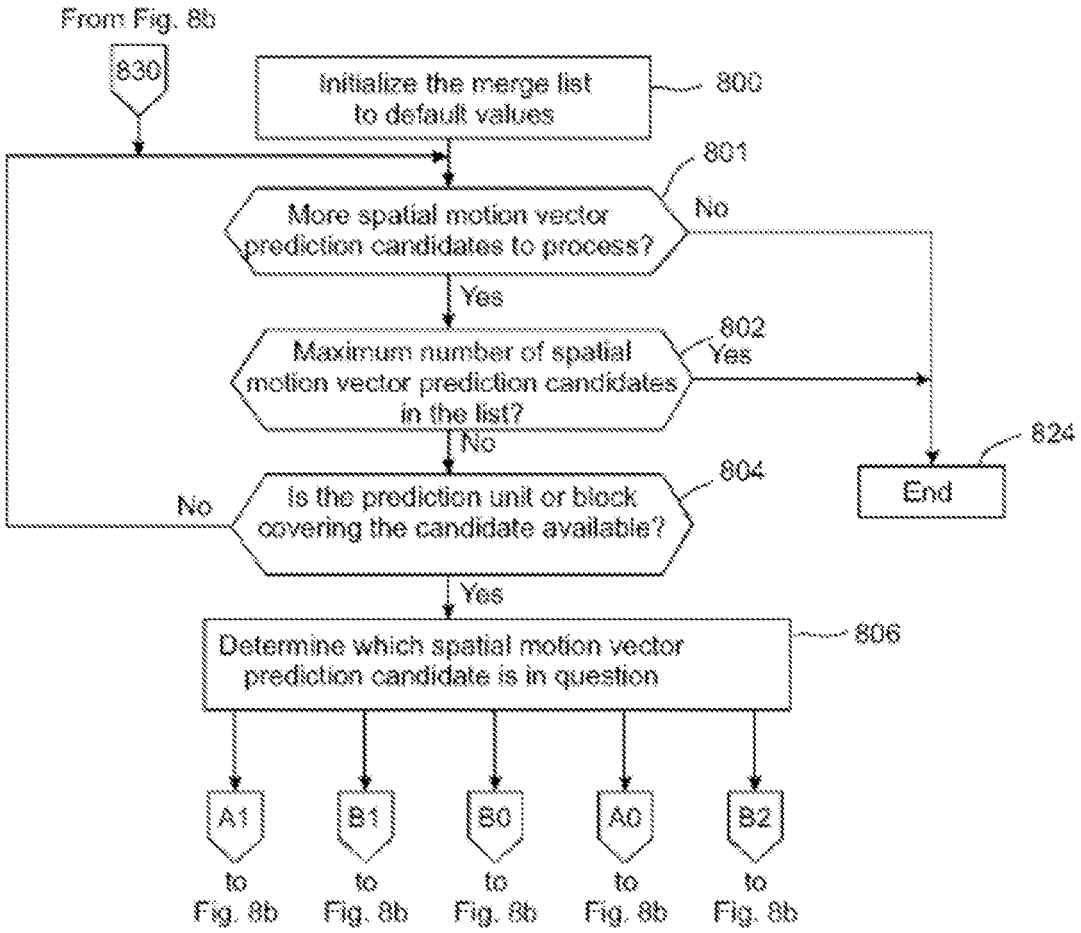
From Fig. 8b
830
Initialize the merge list to default values
800
801
More spatial motion vector prediction candidates to process?
No
Yes
802
Maximum number of spatial motion vector prediction candidates in the list?
Yes
No
824
End
804
Is the prediction unit or block covering the candidate available?
No
Yes
806
Determine which spatial motion vector prediction candidate is in question
A1
B1
B0
A0
B2
to Fig. 8b
to Fig. 8b
to Fig. 8b
to Fig. 8b
to Fig. 8b

Fig. 8a

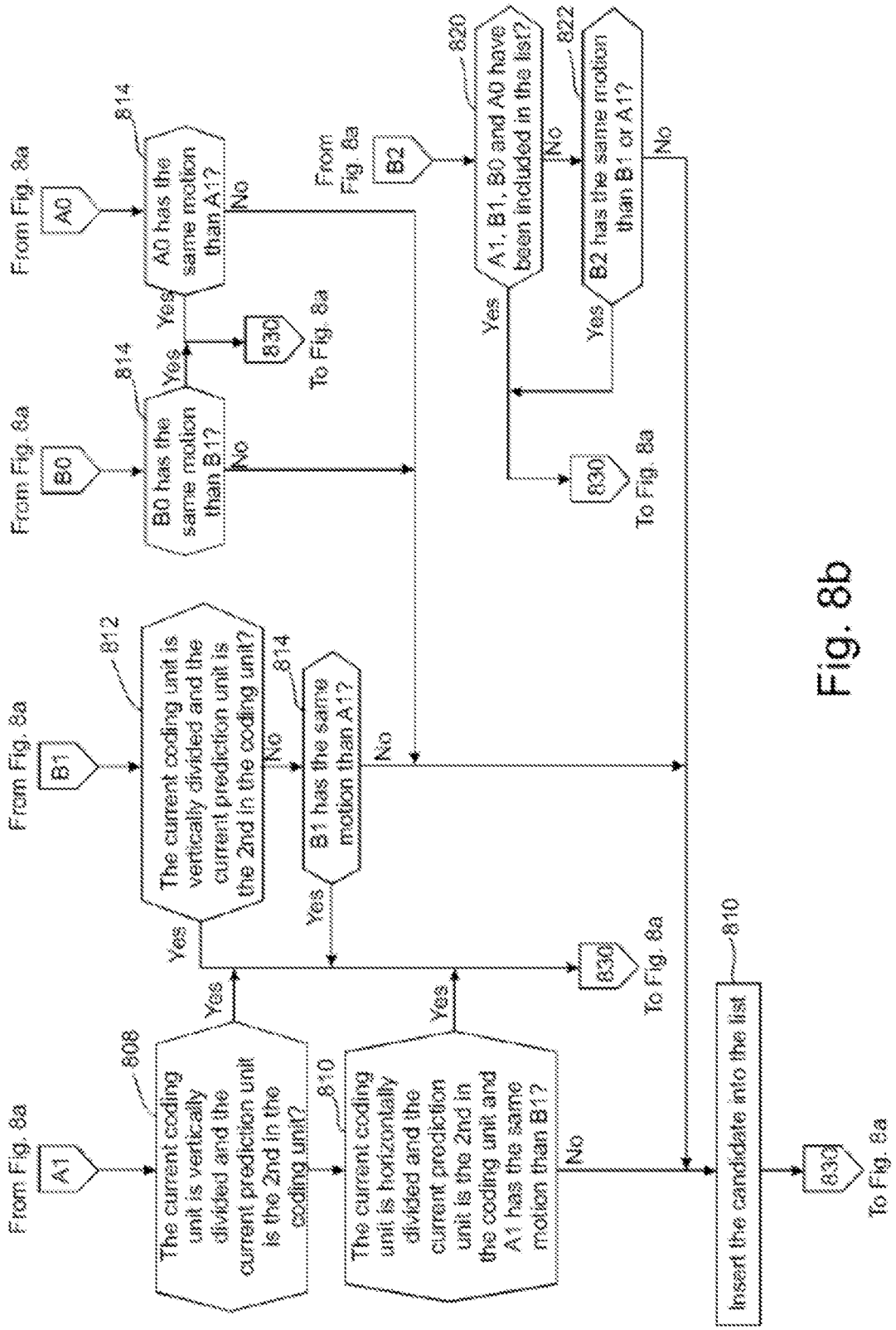
From Fig. 8a
A1
808
The current coding unit is vertically divided and the current prediction unit is the 2nd in the coding unit?
Yes
810
The current coding unit is horizontally divided and the current prediction unit is the 2nd in the coding unit and A1 has the same motion than B1?
Yes
No
From Fig. 8a
B1
812
The current coding unit is vertically divided and the current prediction unit is the 2nd in the coding unit?
Yes
No
814
B1 has the same motion than A1?
Yes
No
830
To Fig. 8a
From Fig. 8a
B0
814
B0 has the same motion than B1?
Yes
No
830
To Fig. 8a
From Fig. 8a
A0
814
A0 has the same motion than A1?
Yes
No
830
To Fig. 8a
From Fig. 8a
B2
820
A1, B1, B0 and A0 have been included in the list?
Yes
No
822
B2 has the same motion than B1 or A1?
Yes
No
830
To Fig. 8a
Insert the candidate into the list
810
830
To Fig. 8a

Fig. 8b

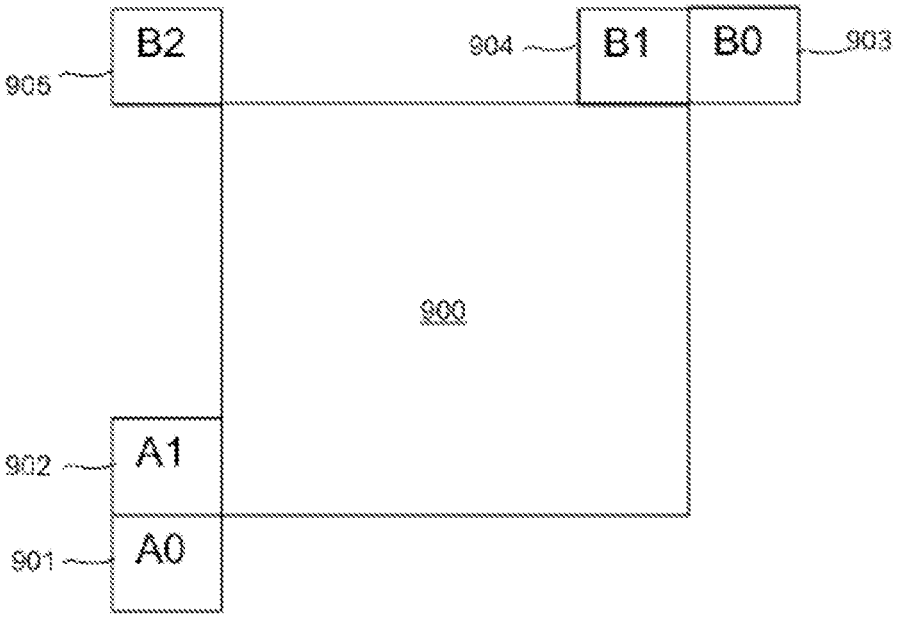

Fig. 9

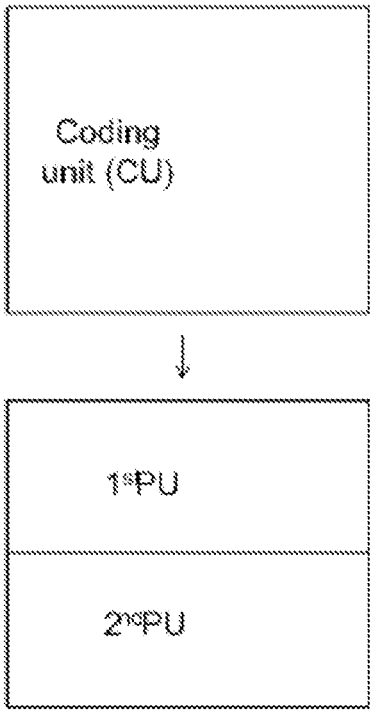

Fig. 10a

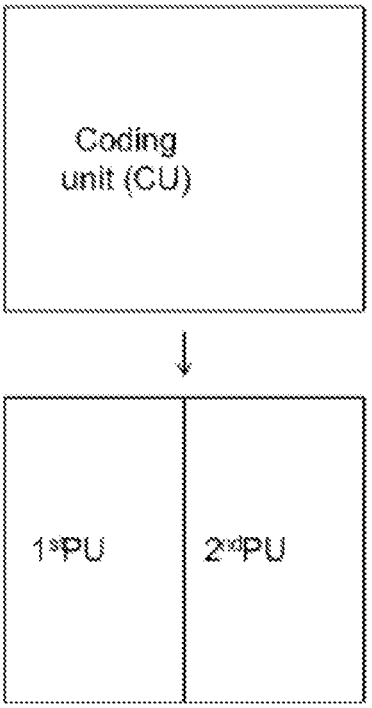

Fig. 10b

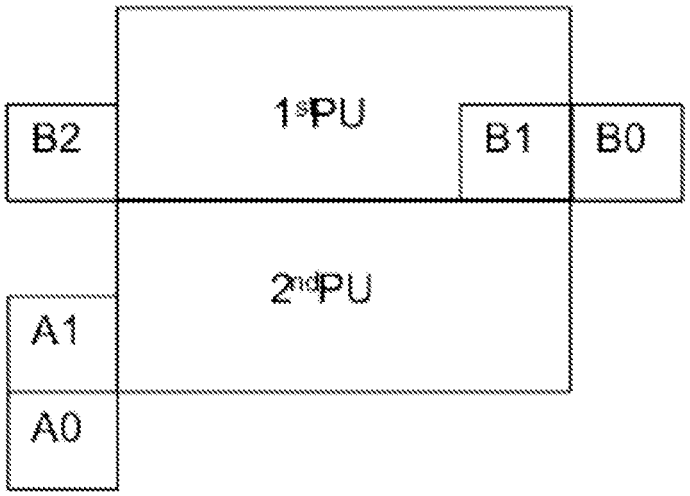

Fig. 11a

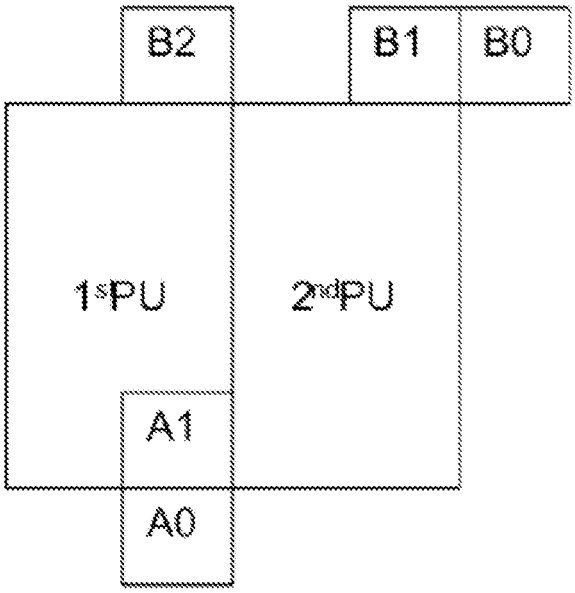

Fig. 11b

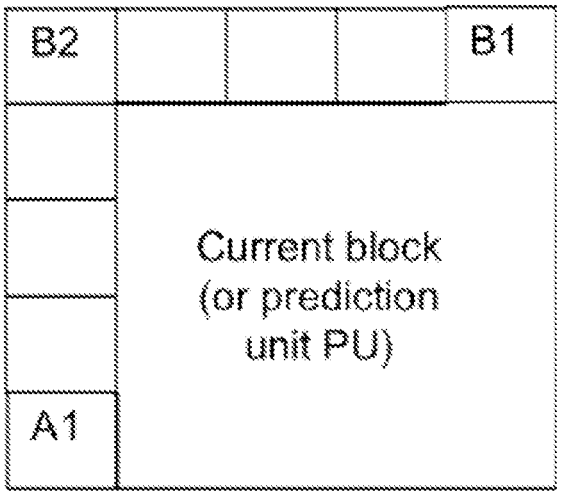

Fig. 12

INTERNATIONAL SEARCH REPORT

International application No.
PCT/FI2012/051070

A. CLASSIFICATION OF SUBJECT MATTER

See extra sheet

According to International Patent Classification (IPC) or to both national classification and IPC

B. FIELDS SEARCHED

Minimum documentation searched (classification system followed by classification symbols)

IPC: G06T, H04N

Documentation searched other than minimum documentation to the extent that such documents are included in the fields searched

FI, SE, NO, DK

Electronic data base consulted during the international search (name of data base and, where practicable, search terms used)

EPO-Internal, WPI, Google Scholar, IEEE Xplore

C. DOCUMENTS CONSIDERED TO BE RELEVANT

Category*	Citation of document, with indication, where appropriate, of the relevant passages	Relevant to claim No.
A	WO 2011062392 A2 (SK TELECOM CO LTD et al.) 26 May 2011 (26.05.2011) abstract, claim 1 & US 2012307905 A1 (KIM SUNYEON et al) 6 December 2012 (06.12.2012)	1-20
A	US 2011170602 A1 (LEE TAMMY et al.) 14 July 2011 (14.07.2011) the whole document	1-20
A	OUDIN, S. et al.: "Block merging for quadtree-based video coding", IEEE Int. Conf. on Multimedia and Expo, 11-15 July 2011, 6p the whole document	1-20
T	SULLIVAN, G. J.: "Overview of the High Efficiency Video Coding (HEVC) Standard", IEEE Trans. on Circuits and Systems for Video technology, vol. 22, no. 12, Dec. 2012, pp. 1649-1668 the whole document	1-20

☐ Further documents are listed in the continuation of Box C. ☒ See patent family annex.

* Special categories of cited documents:

"A" document defining the general state of the art which is not considered to be of particular relevance

"E" earlier application or patent but published on or after the international filing date

"L" document which may throw doubts on priority claim(s) or which is cited to establish the publication date of another citation or other special reason (as specified)

"O" document referring to an oral disclosure, use, exhibition or other means

"P" document published prior to the international filing date but later than the priority date claimed

"T" later document published after the international filing date or priority date and not in conflict with the application but cited to understand the principle or theory underlying the invention

"X" document of particular relevance; the claimed invention cannot be considered novel or cannot be considered to involve an inventive step when the document is taken alone

"Y" document of particular relevance; the claimed invention cannot be considered to involve an inventive step when the document is combined with one or more other such documents, such combination being obvious to a person skilled in the art

"&" document member of the same patent family

Date of the actual completion of the international search
26 March 2013 (26.03.2013)

Date of mailing of the international search report
27 March 2013 (27.03.2013)

Name and mailing address of the ISA/FI
National Board of Patents and Registration of Finland
P.O. Box 1160, FI-00101 HELSINKI, Finland
Facsimile No. +358 9 6939 5328

Authorized officer
Timo Laakso
Telephone No. +358 9 6939 500

Form PCT/ISA/210 (second sheet) (July 2009)

INTERNATIONAL SEARCH REPORT

International application No.
PCT/FI2012/051070

CLASSIFICATION OF SUBJECT MATTER

Int.Cl.
H04N 7/26 (2006.01)
H04N 7/50 (2006.01)
H04N 7/34 (2006.01)
G06T 9/00 (2006.01)

Amazon.com, Inc., Amazon.com Services LLC - Ex. 1017, Page 000059

INTERNATIONAL SEARCH REPORT
Information on patent family members

International application No.
PCT/FI2012/051070

Patent document cited in search report	Publication date	Patent family members(s)	Publication date
WO 2011062392 A2	26/05/2011	US 2012307905 A1	06/12/2012
		CN 102714720 A	03/10/2012
		KR 20110054592 A	25/05/2011
US 2011170602 A1	14/07/2011	US 2013044815 A1	21/02/2013
		MX 2012008229 A	17/08/2012
		EP 2524507 A2	21/11/2012
		CN 102792697 A	21/11/2012
		US 2012155542 A1	21/06/2012
		SG 182491 A1	30/08/2012
		WO 2011087321 A2	21/07/2011
		CA 2787006 A1	21/07/2011
		AU 2011205896 A1	30/08/2012
		KR 20110083365 A	20/07/2011

Amazon.com, Inc., Amazon.com Services LLC - Ex. 1017, Page 000060

WIPO
WORLD
INTELLECTUAL PROPERTY
ORGANIZATION

DOCUMENT MADE AVAILABLE UNDER THE PATENT COOPERATION TREATY (PCT)

International application number:		**PCT/FI2012/051070**
International filing date:		**02 November 2012 (02.11.2012)**
Document type:		**Certified copy of priority document**
Document details:	Country/Office:	**US**
	Number:	**61/555,703**
	Filing date:	**04 November 2011 (04.11.2011)**
Date of receipt at the International Bureau:		**04 December 2012 (04.12.2012)**

Remark: Priority document submitted or transmitted to the International Bureau in compliance with Rule 17.1(a),(b) or (b-*bis*)

34, chemin des Colombettes
1211 Geneva 20, Switzerland
www.wipo.int

Fi 12/51070

PA 7373040

THE UNITED STATES OF AMERICA

TO ALL TO WHOM THESE PRESENTS SHALL COME:

UNITED STATES DEPARTMENT OF COMMERCE
United States Patent and Trademark Office

August 22, 2012

THIS IS TO CERTIFY THAT ANNEXED HERETO IS A TRUE COPY FROM THE RECORDS OF THE UNITED STATES PATENT AND TRADEMARK OFFICE OF THOSE PAPERS OF THE BELOW IDENTIFIED PATENT APPLICATION THAT MET THE REQUIREMENTS TO BE GRANTED A FILING DATE UNDER 35 USC 111.

APPLICATION NUMBER: *61/555,703*
FILING DATE: *November 04, 2011*

THE COUNTRY CODE AND NUMBER OF YOUR PRIORITY APPLICATION, TO BE USED FOR FILING ABROAD UNDER THE PARIS CONVENTION, IS *US61/555,703*

By Authority of the
Under Secretary of Commerce for Intellectual Property
and Director of the United States Patent and Trademark Office

T. WALLACE
Certifying Officer

Electronic Acknowledgement Receipt

EFS ID:	11339430
Application Number:	61555703
International Application Number:	
Confirmation Number:	9276
Title of Invention:	METHOD FOR CODING AND AN APPARATUS
First Named Inventor/Applicant Name:	Mehmet Oguz Bici
Customer Number:	73658
Filer:	Ragip Kurceren/Denise Wilson
Filer Authorized By:	Ragip Kurceren
Attorney Docket Number:	NC77198US-PSP
Receipt Date:	04-NOV-2011
Filing Date:	
Time Stamp:	14:51:51
Application Type:	Provisional

Payment information:

Submitted with Payment	yes
Payment Type	Deposit Account
Payment was successfully received in RAM	$250
RAM confirmation Number	11656
Deposit Account	500270
Authorized User	

The Director of the USPTO is hereby authorized to charge indicated fees and credit any overpayment as follows:

Charge any Additional Fees required under 37 C.F.R. Section 1.16 (National application filing, search, and examination fees)

File Listing:

Document Number	Document Description	File Name	File Size(Bytes)/ Message Digest	Multi Part /.zip	Pages (if appl.)
1	Application Data Sheet	ADS.pdf	840817 3ae234df3677223e57e850d3c546ebb8fef9b8c7	no	5
Warnings:					
Information:					
2		application.pdf	250662 8b50faa9ca67ad5d17e234ed2f53d6f2fd7340de	yes	64
	Multipart Description/PDF files in .zip description				
	Document Description		**Start**	**End**	
	Specification		1	46	
	Claims		47	63	
	Abstract		64	64	
Warnings:					
Information:					
3	Drawings-only black and white line drawings	drawings.pdf	153758 ca4ed14d539f9ae2cf51bbc7a051ef87aafe05ac	no	13
Warnings:					
Information:					
4	Fee Worksheet (SB06)	fee-info.pdf	29891 0254caaa66019904e565403f884456f709312d36	no	2
Warnings:					
Information:					
		Total Files Size (in bytes):	1275128		

This Acknowledgement Receipt evidences receipt on the noted date by the USPTO of the indicated documents, characterized by the applicant, and including page counts, where applicable. It serves as evidence of receipt similar to a Post Card, as described in MPEP 503.

New Applications Under 35 U.S.C. 111
If a new application is being filed and the application includes the necessary components for a filing date (see 37 CFR 1.53(b)-(d) and MPEP 506), a Filing Receipt (37 CFR 1.54) will be issued in due course and the date shown on this Acknowledgement Receipt will establish the filing date of the application.

National Stage of an International Application under 35 U.S.C. 371
If a timely submission to enter the national stage of an international application is compliant with the conditions of 35 U.S.C. 371 and other applicable requirements a Form PCT/DO/EO/903 indicating acceptance of the application as a national stage submission under 35 U.S.C. 371 will be issued in addition to the Filing Receipt, in due course.

New International Application Filed with the USPTO as a Receiving Office
If a new international application is being filed and the international application includes the necessary components for an international filing date (see PCT Article 11 and MPEP 1810), a Notification of the International Application Number and of the International Filing Date (Form PCT/RO/105) will be issued in due course, subject to prescriptions concerning national security, and the date shown on this Acknowledgement Receipt will establish the international filing date of the application.

PATENT APPLICATION
Docket No.: 77198US-PSP

METHOD FOR CODING AND AN APPARATUS

TECHNICAL FIELD

There is provided a method for encoding, a method for decoding, an apparatus, computer program products, an encoder and a decoder.

BACKGROUND INFORMATION

This section is intended to provide a background or context to the invention that is recited in the claims. The description herein may include concepts that could be pursued, but are not necessarily ones that have been previously conceived or pursued. Therefore, unless otherwise indicated herein, what is described in this section is not prior art to the description and claims in this application and is not admitted to be prior art by inclusion in this section

A video codec may comprise an encoder which transforms input video into a compressed representation suitable for storage and/or transmission and a decoder that can uncompress the compressed video representation back into a viewable form, or either one of them. The encoder may discard some information in the original video sequence in order to represent the video in a more compact form, for example at a lower bit rate.

Many hybrid video codecs, operating for example according to the International Telecommunication Union's ITU-T H.263 and H.264 coding standards, encode video information in two phases. In the first phase, pixel values in a certain picture area or "block" are predicted. These pixel values can be predicted, for example, by motion compensation mechanisms, which involve finding and indicating an area in one of the previously encoded video frames (or a later coded video frame) that corresponds closely to the block being coded. Additionally, pixel values can be predicted by spatial mechanisms which involve finding and indicating a spatial region relationship, for example by using pixel values around the block to be coded in a specified manner.

Prediction approaches using image information from a previous (or a later) image can also be called as Inter prediction methods, and prediction approaches using image information within the same image can also be called as Intra prediction methods.

Amazon.com, Inc., Amazon.com Services LLC - Ex. 1017, Page 000066

Copy provided by USPTO from the IFW Image Database on 09/17/2012

The second phase is one of coding the error between the predicted block of pixels and the original block of pixels. This may be accomplished by transforming the difference in pixel values using a specified transform. This transform may be e.g. a Discrete Cosine Transform (DCT) or a variant thereof. After transforming the difference, the transformed difference may be quantized and entropy encoded.

By varying the fidelity of the quantization process, the encoder can control the balance between the accuracy of the pixel representation, (in other words, the quality of the picture) and the size of the resulting encoded video representation (in other words, the file size or transmission bit rate).

The decoder reconstructs the output video by applying a prediction mechanism similar to that used by the encoder in order to form a predicted representation of the pixel blocks (using the motion or spatial information created by the encoder and stored in the compressed representation of the image) and prediction error decoding (the inverse operation of the prediction error coding to recover the quantized prediction error signal in the spatial domain).

After applying pixel prediction and error decoding processes the decoder combines the prediction and the prediction error signals (the pixel values) to form the output video frame.

The decoder (and encoder) may also apply additional filtering processes in order to improve the quality of the output video before passing it for display and/or storing as a prediction reference for the forthcoming frames in the video sequence.

In some video codecs, such as High Efficiency Video Coding Working Draft 4, video pictures may be divided into coding units (CU) covering the area of a picture. A coding unit consists of one or more prediction units (PU) defining the prediction process for the samples within the coding unit and one or more transform units (TU) defining the prediction error coding process for the samples in the coding unit. A coding unit may consist of a square block of samples with a size selectable from a predefined set of possible coding unit sizes. A coding unit with the maximum allowed size can be named as a largest coding unit (LCU) and the video picture may be divided into non-overlapping largest coding units. A largest coding unit can further be split into a combination of smaller coding units, e.g. by recursively splitting the largest coding unit and resultant coding units. Each resulting coding unit may have at least one prediction unit and at least one transform unit associated with it. Each prediction unit and

Amazon.com, Inc., Amazon.com Services LLC - Ex. 1017, Page 000067
Copy provided by USPTO from the IFW Image Database on 08/17/2012

transform unit can further be split into smaller prediction units and transform units in order to increase granularity of the prediction and prediction error coding processes, respectively. Each prediction unit may have prediction information associated with it defining what kind of a prediction is to be applied for the pixels within that prediction unit (e.g. motion vector information for inter predicted prediction units and intra prediction directionality information for intra predicted prediction units). Similarly, each transform unit may be associated with information describing the prediction error decoding process for samples within the transform unit (including e.g. discrete cosine transform (DCT) coefficient information). It may be signalled at coding unit level whether prediction error coding is applied or not for each coding unit. In the case there is no prediction error residual associated with the coding unit, it can be considered there are no transform units for the coding unit. The division of the image into coding units, and division of coding units into prediction units and transform units may be signalled in the bitstream allowing the decoder to reproduce the intended structure of these units.

In some video codecs, motion information is indicated by motion vectors associated with each motion compensated image block. These motion vectors represent the displacement of the image block in the picture to be coded (in the encoder) or decoded (at the decoder) and the prediction source block in one of the previously coded or decoded images (or pictures). In order to represent motion vectors efficiently, motion vectors may be coded differentially with respect to block specific predicted motion vector. In some video codecs, the predicted motion vectors are created in a predefined way, for example by calculating the median of the encoded or decoded motion vectors of the adjacent blocks.

Another way to create motion vector predictions is to generate a list or a set of candidate predictions from blocks in the current frame and/or co-located or other blocks in temporal reference pictures and signalling the chosen candidate as the motion vector prediction. A spatial motion vector prediction is a prediction obtained only on the basis of information of one or more blocks of the same frame than the current frame whereas temporal motion vector prediction is a prediction obtained on the basis of information of one or more blocks of a frame different from the current frame. It may also be possible to obtain motion vector predictions by combining both spatial and temporal prediction information of one or more encoded blocks. These kinds of motion vector predictions are called as spatio-temporal motion vector predictions.

Amazon.com, Inc., Amazon.com Services LLC - Ex. 1017, Page 000068
Copy provided by USPTO from the IFW Image Database on 08/17/2012

In addition to predicting the motion vector values, the reference index in the reference picture list can be predicted. The reference index may be predicted from blocks in the current frame and/or co-located or other blocks in a temporal reference picture. Moreover, some high efficiency video codecs employ an additional motion information coding/decoding mechanism, often called merging/merge mode, where all the motion field information, which includes motion vector and corresponding reference picture index for each available reference picture list, may be predicted and used without any modification or correction. Similarly, predicting the motion field information may be carried out using the motion field information of blocks in the current frame and/or co-located or other blocks in temporal reference pictures and the used motion field information is signalled among a list of motion field candidate list filled with motion field information of available blocks in the current frame and/or co-located or other blocks in temporal reference pictures.

In some video codecs the prediction residual after motion compensation is first transformed with a transform kernel (like DCT) and then coded. The reason for this is that often there still exists some correlation among the residual and transform can in many cases help reduce this correlation and provide more efficient coding.

Some video encoders utilize Lagrangian cost functions to find optimal coding modes, e.g. the desired Macroblock mode and associated motion vectors. This kind of cost function uses a weighting factor □ to tie together the (exact or estimated) image distortion due to lossy coding methods and the (exact or estimated) amount of information that is required to represent the pixel values in an image area:

$$C = D + \square R \quad (1)$$

where C is the Lagrangian cost to be minimized, D is the image distortion (e.g. Mean Squared Error) with the mode and motion vectors considered, and R the number of bits needed to represent the required data to reconstruct the image block in the decoder (including the amount of data to represent the candidate motion vectors).

Some video codecs such as hybrid video codecs may generate a list of motion vector predictions (MVP) consisting of motion vectors of spatial adjacent blocks (spatial MVP) and/or

Amazon.com, Inc., Amazon.com Services LLC - Ex. 1017, Page 000069

Copy provided by USPTO from the IFW Image Database on 08/17/2012

motion vectors of blocks in a previously decoded frame (temporal MVP). One of the candidate motion vectors in the list is signalled to be used as the motion vector prediction of the current block. After the list is generated, some of the motion vector prediction candidates may have the same motion information. In this case, the identical motion vector prediction candidates may be removed to reduce redundancy. During the decoding, if the temporal motion vector prediction information is unavailable due to e.g. loss of reference frame, the decoder may not know if the temporal motion vector prediction candidate in the list is to be removed. This may lead to uncertainty for mapping the decoded candidate index to the candidates whose removal decision is based on comparing motion information with the temporal motion vector prediction. As a result, false assignment of motion vector prediction candidates may occur which may lead to degradation in the picture quality and drift of false motion information throughout the decoding process.

SUMMARY

The present invention introduces a method for generating a motion vector prediction list for an image block. In some embodiments video codecs employ in a motion prediction candidate list construction a way to reduce the complexity of the implementation. This can be achieved by performing a limited number of motion information comparisons between candidate pairs to remove the redundant candidates rather than comparing every available candidate pair. The decision of whether comparing two candidates may depend on the order of the candidates to be considered for the list and/or coding/prediction mode and/or location of the blocks associated with the candidates. In some embodiments a video codec employs a merge process for motion information coding and creates a list of motion prediction candidates from which one of the candidates is to be signalled as the motion information for the current coding or prediction unit. The motion prediction candidates may consist of several spatial motion predictions and a temporal motion prediction. The spatial candidates are obtained from the motion information of e.g. spatial neighbour blocks.

According to a first aspect of the present invention there is provided a method comprising:

Amazon.com, Inc., Amazon.com Services LLC - Ex. 1017, Page 000070

Copy provided by USPTO from the IFW Image Database on 08/17/2012

receiving a block of pixels including a prediction unit; determining a set of spatial motion vector prediction candidates for the block of pixels; the spatial motion vector prediction candidates being provided with motion information;

selecting a first spatial motion vector prediction candidate from the set of spatial motion vector prediction candidates as a potential spatial motion vector prediction candidate to be included in a merge list for the prediction unit;

determining a subset of spatial motion vector predictions based on the location of the block associated with the first spatial motion vector prediction candidate;

comparing motion information of the first spatial motion vector prediction candidate with motion information of the spatial motion vector prediction candidate in the determined subset of spatial motion vector prediction candidates;

if at least one of the comparisons indicates that the motion vector information of the spatial motion vector prediction candidates correspond with each other, excluding the first spatial motion vector prediction candidate from the merge list.

According to a second aspect of the present invention there is provided a method comprising:

receiving an encoded block of pixels including a prediction unit;

determining a set of spatial motion vector prediction candidates for the encoded block of pixels; the spatial motion vector prediction candidates being provided with motion information;

selecting a first spatial motion vector prediction candidate from the set of spatial motion vector prediction candidates as a potential spatial motion vector prediction candidate to be included in a merge list for the prediction unit;

determining a subset of spatial motion vector predictions based on the location of the block associated with the first spatial motion vector prediction candidate;

comparing motion information of the first spatial motion vector prediction candidate with motion information of another spatial motion vector prediction candidate of the set of spatial motion vector prediction candidates;

Amazon.com, Inc., Amazon.com Services LLC - Ex. 1017, Page 000071
Copy provided by USPTO from the IFW Image Database on 08/17/2012

if at least one of the comparisons indicates that the motion vector information of the spatial motion vector prediction candidates correspond with each other, excluding the first spatial motion vector prediction candidate from the merge list.

According to a third aspect of the present invention there is provided an apparatus comprising a processor and a memory including computer program code, the memory and the computer program code configured to, with the processor, cause the apparatus to:

receive a block of pixels

including a prediction unit;

determining a set of spatial motion vector prediction candidates for the block of pixels; the spatial motion vector prediction candidates being provided with motion information;

selecting a first spatial motion vector prediction candidate from the set of spatial motion vector prediction candidates as a potential spatial motion vector prediction candidate to be included in a merge list for the prediction unit;

determining a subset of spatial motion vector predictions based on the location of the block associated with the first spatial motion vector prediction candidate;

comparing motion information of the first spatial motion vector prediction candidate with motion information of the spatial motion vector prediction candidate in the determined subset of spatial motion vector prediction candidates;

if at least one the comparisons indicates that the motion vector information of the spatial motion vector prediction candidates correspond with each other, excluding the first spatial motion vector prediction candidate from the merge list.

According to a fourth aspect of the present invention there is provided an apparatus comprising a processor and a memory including computer program code, the memory and the computer program code configured to, with the processor, cause the apparatus to:

receive an encoded block of pixels

including a prediction unit;

determining a set of spatial motion vector prediction candidates for the encoded block of pixels; the spatial motion vector prediction candidates being provided with motion information;

Amazon.com, Inc., Amazon.com Services LLC - Ex. 1017, Page 000072
Copy provided by USPTO from the IFW Image Database on 08/17/2012

selecting a first spatial motion vector prediction candidate from the set of spatial motion vector prediction candidates as a potential spatial motion vector prediction candidate to be included in a merge list for the prediction unit;

determining a subset of spatial motion vector predictions based on the location of the block associated with the first spatial motion vector prediction candidate;

comparing motion information of the first spatial motion vector prediction candidate with motion information of another spatial motion vector prediction candidate of the set of spatial motion vector prediction candidates;

if at least one of the comparisons indicates that the motion vector information of the spatial motion vector prediction candidates correspond with each other, excluding the first spatial motion vector prediction candidate from the merge list.

According to a fifth aspect of the present invention there is provided a storage medium having stored thereon a computer executable program code for use by an encoder, said program code comprises instructions for:

receiving a block of pixels including a prediction unit;

determining a set of spatial motion vector prediction candidates for the block of pixels; the spatial motion vector prediction candidates being provided with motion information;

select a first spatial motion vector prediction candidate from the set of spatial motion vector prediction candidates as a potential spatial motion vector prediction candidate to be included in a merge list for the prediction unit;

determine a subset of spatial motion vector predictions based on the location of the block associated with the first spatial motion vector prediction candidate;

compare motion information of the first spatial motion vector prediction candidate with motion information of the spatial motion vector prediction candidate in the determined subset of spatial motion vector prediction candidates;

exclude the first spatial motion vector prediction candidate from the merge list, if at least one of the comparisons indicates that the motion vector information of the spatial motion vector prediction candidates correspond with each other

Amazon.com, Inc., Amazon.com Services LLC - Ex. 1017, Page 000073

Copy provided by USPTO from the IFW Image Database on 08/17/2012

According to a sixth aspect of the present invention there is provided a storage medium having stored thereon a computer executable program code for use by a decoder, said program code comprises instructions for:

receiving an encoded block of pixels including a prediction unit;

determining a set of spatial motion vector prediction candidates for the encoded block of pixels; the spatial motion vector prediction candidates being provided with motion information;

selecting a first spatial motion vector prediction candidate from the set of spatial motion vector prediction candidates as a potential spatial motion vector prediction candidate to be included in a merge list for the prediction unit;

determining a subset of spatial motion vector predictions based on the location of the block associated with the first spatial motion vector prediction candidate;

comparing motion information of the first spatial motion vector prediction candidate with motion information of the spatial motion vector prediction candidate in the determined subset of spatial motion vector prediction candidates;

if at least one of the comparisons indicates that the motion vector information of the spatial motion vector prediction candidates correspond with each other, excluding the first spatial motion vector prediction candidate from the merge list.

According to a seventh aspect of the present invention there is provided an apparatus comprising:

means for receiving a block of pixels including a prediction unit;

means for determining a set of spatial motion vector prediction candidates for the block of pixels; the spatial motion vector prediction candidates being provided with motion information;

selecting a first spatial motion vector prediction candidate from the set of spatial motion vector prediction candidates as a potential spatial motion vector prediction candidate to be included in a merge list for the prediction unit;

determining a subset of spatial motion vector predictions based on the location of the block associated with the first spatial motion vector prediction candidate;

Amazon.com, Inc., Amazon.com Services LLC - Ex. 1017, Page 000074

Copy provided by USPTO from the IFW Image Database on 08/17/2012

comparing motion information of the first spatial motion vector prediction candidate with motion information of the spatial motion vector prediction candidate in the determined subset of spatial motion vector prediction candidates;

if at least one of the comparisons indicates that the motion vector information of the spatial motion vector prediction candidates correspond with each other, excluding the first spatial motion vector prediction candidate from the merge list.

According to an eighth aspect of the present invention there is provided an apparatus comprising:

means for receiving an encoded block of pixels including a prediction unit;

means for determining a set of spatial motion vector prediction candidates for the encoded block of pixels; the spatial motion vector prediction candidates being provided with motion information;

means for selecting a first spatial motion vector prediction candidate from the set of spatial motion vector prediction candidates as a potential spatial motion vector prediction candidate to be included in a merge list for the prediction unit;

means for determining a subset of spatial motion vector predictions based on the location of the block associated with the first spatial motion vector prediction candidate;

means for comparing motion information of the first spatial motion vector prediction candidate with motion information of the spatial motion vector prediction candidate in the determined subset of spatial motion vector prediction candidates;

means for excluding the first spatial motion vector prediction candidate from the merge list, if at least one of the comparisons indicates that the motion vector information of the spatial motion vector prediction candidates correspond with each other.

DESCRIPTION OF THE DRAWINGS

For better understanding of the present invention, reference will now be made by way of example to the accompanying drawings in which:

Figure 1 shows schematically an electronic device employing some embodiments of the invention;

Amazon.com, Inc., Amazon.com Services LLC - Ex. 1017, Page 000075
Copy provided by USPTO from the IFW Image Database on 08/17/2012

Figure 2 shows schematically a user equipment suitable for employing some embodiments of the invention;

Figure 3 further shows schematically electronic devices employing embodiments of the invention connected using wireless and wired network connections;

Figure 4a shows schematically an embodiment of the invention as incorporated within an encoder;

Figure 4b shows schematically an embodiment of a prediction reference list generation and modification according to some embodiments of the invention;

Figures 5a and 5b show a flow diagram showing the operation of an embodiment of the invention with respect to the encoder as shown in figure 4a;

Figure 6a illustrates an example of spatial and temporal prediction of a prediction unit;

Figure 6b illustrates another example of spatial and temporal prediction of a prediction unit;

Figure 7 shows schematically an embodiment of the invention as incorporated within a decoder;

Figures 8a and 8b show a flow diagram of showing the operation of an embodiment of the invention with respect to the decoder shown in figure 7;

Figure 9 illustrates an example of a coding unit and some neighbour blocks of the coding unit;

Figure 10a illustrates an example of a horizontal division of the coding unit;

Figure 10b illustrates an example of a vertical division of the coding unit;

Figure 11a illustrates locations of five spatial neighbours A0, A1, B0, B1, B2 for a prediction unit generated as the second prediction unit of a horizontally divided coding unit;

Figure 11b illustrates locations of five spatial neighbours for a prediction unit generated as the second prediction unit of a vertically divided coding unit; and

Figure 12 illustrates an example of blocks between some spatial neighbours of a coding unit.

Amazon.com, Inc., Amazon.com Services LLC - Ex. 1017, Page 000076

Copy provided by USPTO from the IFW Image Database on 08/17/2012

DETAILED DESCRIPTION OF SOME EXAMPLE EMBODIMENTS

The following describes in further detail suitable apparatus and possible mechanisms for the provision of improving the prediction accuracy and hence possibly reducing information to be transmitted in video coding systems. In this regard reference is first made to Figure 1 which shows a schematic block diagram of an exemplary apparatus or electronic device 50, which may incorporate a codec according to an embodiment of the invention.

The electronic device 50 may for example be a mobile terminal or user equipment of a wireless communication system. However, it would be appreciated that embodiments of the invention may be implemented within any electronic device or apparatus which may require encoding and decoding or encoding or decoding video images.

The apparatus 50 may comprise a housing 30 for incorporating and protecting the device. The apparatus 50 further may comprise a display 32 in the form of a liquid crystal display. In other embodiments of the invention the display may be any suitable display technology suitable to display an image or video. The apparatus 50 may further comprise a keypad 34. In other embodiments of the invention any suitable data or user interface mechanism may be employed. For example the user interface may be implemented as a virtual keyboard or data entry system as part of a touch-sensitive display. The apparatus may comprise a microphone 36 or any suitable audio input which may be a digital or analogue signal input. The apparatus 50 may further comprise an audio output device which in embodiments of the invention may be any one of: an earpiece 38, speaker, or an analogue audio or digital audio output connection. The apparatus 50 may also comprise a battery 40 (or in other embodiments of the invention the device may be powered by any suitable mobile energy device such as solar cell, fuel cell or clockwork generator). The apparatus may further comprise an infrared port 42 for short range line of sight communication to other devices. In other embodiments the apparatus 50 may further comprise any suitable short range communication solution such as for example a Bluetooth wireless connection or a USB/firewire wired connection.

The apparatus 50 may comprise a controller 56 or processor for controlling the apparatus 50. The controller 56 may be connected to memory 58 which in embodiments of the invention may store both data in the form of image and audio data and/or may also store instructions for implementation on the controller 56. The controller 56 may further be connected to codec

Amazon.com, Inc., Amazon.com Services LLC - Ex. 1017, Page 000077
Copy provided by USPTO from the IFW Image Database on 08/17/2012

circuitry 54 suitable for carrying out coding and decoding of audio and/or video data or assisting in coding and decoding carried out by the controller 56.

The apparatus 50 may further comprise a card reader 48 and a smart card 46, for example a UICC and UICC reader for providing user information and being suitable for providing authentication information for authentication and authorization of the user at a network.

The apparatus 50 may comprise radio interface circuitry 52 connected to the controller and suitable for generating wireless communication signals for example for communication with a cellular communications network, a wireless communications system or a wireless local area network. The apparatus 50 may further comprise an antenna 44 connected to the radio interface circuitry 52 for transmitting radio frequency signals generated at the radio interface circuitry 52 to other apparatus(es) and for receiving radio frequency signals from other apparatus(es).

In some embodiments of the invention, the apparatus 50 comprises a camera capable of recording or detecting individual frames which are then passed to the codec 54 or controller for processing. In some embodiments of the invention, the apparatus may receive the video image data for processing from another device prior to transmission and/or storage. In some embodiments of the invention, the apparatus 50 may receive either wirelessly or by a wired connection the image for coding/decoding.

With respect to Figure 3, an example of a system within which embodiments of the present invention can be utilized is shown. The system 10 comprises multiple communication devices which can communicate through one or more networks. The system 10 may comprise any combination of wired or wireless networks including, but not limited to a wireless cellular telephone network (such as a GSM, UMTS, CDMA network etc), a wireless local area network (WLAN) such as defined by any of the IEEE 802.x standards, a Bluetooth personal area network, an Ethernet local area network, a token ring local area network, a wide area network, and the Internet.

The system 10 may include both wired and wireless communication devices or apparatus 50 suitable for implementing embodiments of the invention.

For example, the system shown in Figure 3 shows a mobile telephone network 11 and a representation of the internet 28. Connectivity to the internet 28 may include, but is not limited to, long range wireless connections, short range wireless connections, and various wired

Amazon.com, Inc., Amazon.com Services LLC - Ex. 1017, Page 000078
Copy provided by USPTO from the IFW Image Database on 08/17/2012

connections including, but not limited to, telephone lines, cable lines, power lines, and similar communication pathways.

The example communication devices shown in the system 10 may include, but are not limited to, an electronic device or apparatus 50, a combination of a personal digital assistant (PDA) and a mobile telephone 14, a PDA 16, an integrated messaging device (IMD) 18, a desktop computer 20, a notebook computer 22. The apparatus 50 may be stationary or mobile when carried by an individual who is moving. The apparatus 50 may also be located in a mode of transport including, but not limited to, a car, a truck, a taxi, a bus, a train, a boat, an airplane, a bicycle, a motorcycle or any similar suitable mode of transport.

Some or further apparatuses may send and receive calls and messages and communicate with service providers through a wireless connection 25 to a base station 24. The base station 24 may be connected to a network server 26 that allows communication between the mobile telephone network 11 and the internet 28. The system may include additional communication devices and communication devices of various types.

The communication devices may communicate using various transmission technologies including, but not limited to, code division multiple access (CDMA), global systems for mobile communications (GSM), universal mobile telecommunications system (UMTS), time divisional multiple access (TDMA), frequency division multiple access (FDMA), transmission control protocol-internet protocol (TCP-IP), short messaging service (SMS), multimedia messaging service (MMS), email, instant messaging service (IMS), Bluetooth, IEEE 802.11 and any similar wireless communication technology. A communications device involved in implementing various embodiments of the present invention may communicate using various media including, but not limited to, radio, infrared, laser, cable connections, and any suitable connection.

With respect to Figure 4a, a block diagram of a video encoder suitable for carrying out embodiments of the invention is shown. Furthermore, with respect to Figures 5a and 5b, the operation of the encoder exemplifying embodiments of the invention specifically with respect to construction of the list of candidate predictions is shown as a flow diagram.

Figure 4a shows the encoder as comprising a pixel predictor 302, prediction error encoder 303 and prediction error decoder 304. Figure 4a also shows an embodiment of the pixel predictor 302 as comprising an inter-predictor 306, an intra-predictor 308, a mode selector 310, a filter

Amazon.com, Inc., Amazon.com Services LLC - Ex. 1017, Page 000079
Copy provided by USPTO from the IFW Image Database on 08/17/2012

316, and a reference frame memory 318. In this embodiment the mode selector 310 comprises a block processor 381 and a cost evaluator 382. The encoder may further comprise an entropy encoder 330 for entropy encoding the bit stream.

Figure 4b depicts an embodiment of the inter predictor 306. The inter predictor 306 comprises a reference frame selector 360 for selecting reference frame or frames, a motion vector definer 361, a prediction list modifier 363 and a motion vector selector 364. These elements or some of them may be part of a prediction processor 362 or they may be implemented by using other means.

The pixel predictor 302 receives the image 300 to be encoded at both the inter-predictor 306 (which determines the difference between the image and a motion compensated reference frame 318) and the intra-predictor 308 (which determines a prediction for an image block based only on the already processed parts of the current frame or picture). The output of both the inter-predictor and the intra-predictor may be passed to the mode selector 310. The intra-predictor 308 may have more than one intra-prediction modes. Hence, each mode may perform the intra-prediction and provide the predicted signal to the mode selector 310. The mode selector 310 also receives a copy of the image 300.

The mode selector 310 determines which encoding mode to use to encode the current block. If the mode selector 310 decides to use an inter-prediction mode it will pass the output of the inter-predictor 306 to the output of the mode selector 310. If the mode selector 310 decides to use an intra-prediction mode it will pass the output of one of the intra-predictor modes to the output of the mode selector 310.

The output of the mode selector is passed to a first summing device 321. The first summing device may subtract the pixel predictor 302 output from the image 300 to produce a first prediction error signal 320 which is input to the prediction error encoder 303.

The pixel predictor 302 further receives from a preliminary reconstructor 339 the combination of the prediction representation of the image block 312 and the output 338 of the prediction error decoder 304. The preliminary reconstructed image 314 may be passed to the intra-predictor 308 and to a filter 316. The filter 316 receiving the preliminary representation may filter the preliminary representation and output a final reconstructed image 340 which may be saved in a reference frame memory 318. The reference frame memory 318 may be connected

Amazon.com, Inc., Amazon.com Services LLC - Ex. 1017, Page 000080

Copy provided by USPTO from the IFW Image Database on 08/17/2012

to the inter-predictor 306 to be used as the reference image against which the future image 300 is compared in inter-prediction operations.

The operation of the pixel predictor 302 may be configured to carry out any known pixel prediction algorithm known in the art.

The pixel predictor 302 may also comprise a filter 385 to filter the predicted values before outputting them from the pixel predictor 302.

The operation of the prediction error encoder 302 and prediction error decoder 304 will be described hereafter in further detail. In the following examples the encoder generates images in terms of 16x16 pixel macroblocks which go to form the full image or picture. Thus, for the following examples the pixel predictor 302 outputs a series of predicted macroblocks of size 16x16 pixels and the first summing device 321 outputs a series of 16x16 pixel residual data macroblocks which may represent the difference between a first macro-block in the image 300 against a predicted macro-block (output of pixel predictor 302). It would be appreciated that other size macro blocks may be used.

The prediction error encoder 303 comprises a transform block 342 and a quantizer 344. The transform block 342 transforms the first prediction error signal 320 to a transform domain. The transform is, for example, the DCT transform. The quantizer 344 quantizes the transform domain signal, e.g. the DCT coefficients, to form quantized coefficients.

The prediction error decoder 304 receives the output from the prediction error encoder 303 and performs the opposite processes of the prediction error encoder 303 to produce a decoded prediction error signal 338 which when combined with the prediction representation of the image block 312 at the second summing device 339 produces the preliminary reconstructed image 314. The prediction error decoder may be considered to comprise a dequantizer 346, which dequantizes the quantized coefficient values, e.g. DCT coefficients, to reconstruct the transform signal and an inverse transformation block 348, which performs the inverse transformation to the reconstructed transform signal wherein the output of the inverse transformation block 348 contains reconstructed block(s). The prediction error decoder may also comprise a macroblock filter (not shown) which may filter the reconstructed macroblock according to further decoded information and filter parameters.

Amazon.com, Inc., Amazon.com Services LLC - Ex. 1017, Page 000081
Copy provided by USPTO from the IFW Image Database on 08/17/2012

In the following the operation of an example embodiment of the inter predictor 306 will be described in more detail. The inter predictor 306 receives the current block for inter prediction. It is assumed that for the current block there already exists one or more neighbouring blocks which have been encoded and motion vectors have been defined for them. For example, the block on the left side and/or the block above the current block may be such blocks. Spatial motion vector predictions for the current block can be formed e.g. by using the motion vectors of the encoded neighbouring blocks and/or of non-neighbour blocks in the same slice or frame, using linear or non-linear functions of spatial motion vector predictions, using a combination of various spatial motion vector predictors with linear or non-linear operations, or by any other appropriate means that do not make use of temporal reference information. It may also be possible to obtain motion vector predictors by combining both spatial and temporal prediction information of one or more encoded blocks. These kinds of motion vector predictors may also be called as spatio-temporal motion vector predictors.

Reference frames used in encoding the neighbouring blocks have been stored to the reference frame memory 404. The reference frames may be short term references or long term references and each reference frame may have a unique index indicative of the location of the reference frame in the reference frame memory. When a reference frame is no longer used as a reference frame it may be removed from the reference frame memory or marked as a non-reference frame wherein the storage location of that reference frame may be occupied for a new reference frame. In addition to the reference frames of the neighbouring blocks the reference frame selector 360 may also select one or more other frames as potential reference frames and store them to the reference frame memory.

Motion vector information of encoded blocks is also stored into the memory so that the inter predictor 306 is able to retrieve the motion vector information when processing motion vector candidates for the current block.

In some embodiments the motion vectors are stored into one or more lists. For example, motion vectors of uni-directionally predicted frames (e.g. P-frames) may be stored to a list called as list 0. For bi-directionally predicted frames (e.g. B-frames) there may be two lists (list 0 and list 1) and for multi-predicted frames there may be more than two lists. Reference frame indices possibly associated with the motion vectors may also be stored in one or more lists.

Amazon.com, Inc., Amazon.com Services LLC - Ex. 1017, Page 000082
Copy provided by USPTO from the IFW Image Database on 08/17/2012

In some embodiments there may be two or more motion vector prediction procedures and each procedure may have its own candidate set creation process. In one procedure, only the motion vector values are used. In another procedure, which may be called as a Merge Mode, each candidate element may comprise 1) The information whether 'block was uni-predicted using only list0' or 'block was uni-predicted using only list1' or 'block was bi-predicted using list0 and list1' 2) motion vector value for list0 3) Reference picture index in list0 4) motion vector value for list1 5) Reference picture index list1. Therefore, whenever two prediction candidates are to be compared, not only the motion vector values are compared, but also the five values mentioned above may be compared to determine whether they correspond with each other or not. On the other hand, if any of the comparisons indicate that the prediction candidates do not have equal motion information, no further comparisons need be performed.

The motion vector definer 361 defines candidate motion vectors for the current frame by using one or more of the motion vectors of one or more neighbour blocks and/or other blocks of the current block in the same frame and/or co-located blocks and/or other blocks of the current block in one or more other frames. These candidate motion vectors can be called as a set of candidate predictors or a predictor set. Each candidate predictor thus represents the motion vector of one or more already encoded block. In some embodiments the motion vector of the candidate predictor is set equal to the motion vector of a neighbour block for the same list if the current block and the neighbour block refer to the same reference frames for that list. Also for temporal prediction there may be one or more previously encoded frames wherein motion vectors of a co-located block or other blocks in a previously encoded frame can be selected as candidate predictors for the current block. The temporal motion vector predictor candidate can be generated by any means that make use of the frames other than the current frame.

The candidate motion vectors can also be obtained by using more than one motion vector of one or more other blocks such as neighbour blocks of the current block and/or co-located blocks in one or more other frames. As an example, any combination of the motion vector of the block to the left of the current block, the motion vector of the block above the current block, and the motion vector of the block at the up-right corner of the current block may be used (i.e. the block to the right of the block above the current block). The combination may be a median of the motion vectors or calculated by using other formulas. For example, one or more of the motion

Amazon.com, Inc., Amazon.com Services LLC - Ex. 1017, Page 000083
Copy provided by USPTO from the IFW Image Database on 08/17/2012

vectors to be used in the combination may be scaled by a scaling factor, an offset may be added, and/or a constant motion vector may be added. In some embodiments the combined motion vector is based on both temporal and spatial motion vectors, e.g. the motion vector of one or more of the neighbour block or other block of the current block and the motion vector of a co-located block or other block in another frame.

If a neighbour block does not have any motion vector information a default motion vector such as a zero motion vector may be used instead.

Figure 9 illustrates an example of a coding unit 900 and some neighbour blocks 901—905 of the coding unit. As can be seen from Figure 9, if the coding unit 900 represents the current block, the neighbouring blocks 901—905 labelled A0, A1, B0, B1 and B2 could be such neighbour blocks which may be used when obtaining the candidate motion vectors.

Creating additional or extra motion vector predictions based on previously added predictors may be needed when the current number of candidates is limited or insufficient. This kind of creating additional candidates can be performed by combining previous two predictions and/or processing one previous candidate by scaling or adding offset and/or adding a zero motion vector with various reference indices. Hence, the motion vector definer 361 may examine how many motion vector candidates can be defined and how many potential candidate motion vectors exist for the current block. If the number of potential motion vector candidates is smaller than a threshold, the motion vector definer 361 may create additional motion vector predictions.

In some embodiments the combined motion vector can be based on motion vectors in different lists. For example, one motion vector may be defined by combining one motion vector from the list 0 and one motion vector from the list 1 e.g. when the neighbouring or co-located block is a bi-directionally predicted block and there exists one motion vector in the list 0 and one motion vector in the list 1 for the bi-directionally predicted block.

To distinguish the current block from the encoded/decoded blocks the motion vectors of which are used as candidate motion vectors, those encoded/decoded blocks are also called as reference blocks in this application.

In some embodiments not only the motion vector information of the reference block(s) is obtained (e.g. by copying) but also a reference index of the reference block in the reference picture list may be copied to the candidate list. The information whether the block was uni-

Amazon.com, Inc., Amazon.com Services LLC - Ex. 1017, Page 000084

Copy provided by USPTO from the IFW Image Database on 08/17/2012

predicted using only list0 or the block was uni-predicted using only list1 or the block was bi-predicted using list0 and list1 may also be copied. The candidate list may also be called as a candidate set or a set of motion vector prediction candidates.

Figure 6a illustrates an example of spatial and temporal prediction of a prediction unit. There is depicted the current block 601 in the frame 600 and a neighbour block 602 which already has been encoded. The motion vector definer 361 has defined a motion vector 603 for the neighbour block 602 which points to a block 604 in the previous frame 605. This motion vector can be used as a potential spatial motion vector prediction 610 for the current block. Figure 6a depicts that a co-located block 606 in the previous frame 605, i.e. the block at the same location than the current block but in the previous frame, has a motion vector 607 pointing to a block 609 in another frame 608. This motion vector 607 can be used as a potential temporal motion vector prediction-611 for the current frame.

Figure 6b illustrates another example of spatial and temporal prediction of a prediction unit. In this example the block 606 of the previous frame 605 uses bi-directional prediction based on the block 609 of the frame preceding the frame 605 and on the block 612 succeeding the current frame 600. The temporal motion vector prediction for the current block 601 may be formed by using both the motion vectors 607, 614 or either of them.

The operation of the prediction list modifier 363 will now be described in more detail with reference to the flow diagram of Figures 5a and 5b. The prediction list modifier 363 initializes a motion vector prediction list to default values in block 500 of Figure 5a. The prediction list modifier 363 may also initialize a list index to an initial value such as zero. Then, in block 501 the prediction list modifier checks whether there are any motion vector candidates to process. If there is at least one motion vector candidate in the predictor set for processing, the prediction list modifier 363 generates the next motion vector candidate which may be a temporal motion vector or a spatial motion vector. The comparison can be an identicality/equivalence check or comparing the (absolute) difference against a threshold or any other similarity metric.

In the following, a merge process for motion information coding according to an example embodiment will be described in more detail. The encoder creates a list of motion prediction candidates from which one of the candidates is to be signalled as the motion information for the current coding unit or prediction unit. The motion prediction candidates may consist of several

Amazon.com, Inc., Amazon.com Services LLC - Ex. 1017, Page 000085
Copy provided by USPTO from the IFW Image Database on 08/17/2012

spatial motion predictions and a temporal motion prediction. The spatial candidates can be obtained from the motion information of e.g. the spatial neighbour blocks A0, A1, B0, B1, B2, whose motion information is used as spatial candidate motion predictions. The temporal motion prediction candidate may be obtained by processing the motion of a block in a frame other than the current frame. In this example embodiment, the encoder operations to construct the merge list for the spatial candidates may include the following. The operations may be carried out by the prediction list modifier 363, for example.

A maximum number of spatial motion prediction candidates to be included in the merge list may be defined. This maximum number may have been stored, for example, to the memory 58 of the apparatus 50, or to another appropriate place. It is also possible to determine the maximum number by using other means, or it may be determined in the software of the encoder of the apparatus 50.

In some embodiments the maximum number of spatial motion prediction candidates to be included in the merge list is four but in some embodiments the maximum number may be less than four or greater than four.

In this example the spatial motion prediction candidates are the spatial neighbour blocks A0, A1, B0, B1, B2. The spatial motion vector prediction candidate A1 is located on the left side of the prediction unit when the encoding/decoding order is from left to right and from top to bottom of the frame, slice or another entity to be encoded/decoded. Respectively, the spatial motion vector prediction candidate B1 is located above the prediction unit. third; the spatial motion vector prediction candidate B0 is on the right side of the spatial motion vector prediction candidate B1; the spatial motion vector prediction candidate A0 is below the spatial motion vector prediction candidate A1; and the spatial motion vector prediction candidate B2 is located on the same column than spatial motion vector prediction candidate A1 and on the same row than the spatial motion vector prediction candidate B1. In other words, the spatial motion vector prediction candidate B2 is cornerwise neighbouring the prediction unit as can be seen e.g. from Figure 9.

These spatial motion prediction candidates can be processed in a predetermined order, for example, A1, B1, B0, A0 and B2. The first spatial motion prediction candidate to be selected for further examination is thus A1. Before further examination is performed for the selected spatial

Amazon.com, Inc., Amazon.com Services LLC - Ex. 1017, Page 000086
Copy provided by USPTO from the IFW Image Database on 08/17/2012

motion prediction candidate, it may be determined whether the merge list already contains a maximum number of spatial motion prediction candidates. Hence, the prediction list modifier 363 compares 502 the number of spatial motion prediction candidates in the merge list with the maximum number, and if the number of spatial motion prediction candidates in the merge list is not less than the maximum number, the selected spatial motion prediction candidate is not included in the merge list and the process of constructing the merge list can be stopped 526. On the other hand, if the number of spatial motion prediction candidates in the merge list is less than the maximum number, a further analyses of the selected spatial motion prediction candidate is performed (blocks 504-522).

For all the spatial motion prediction candidates for which the further analyses is to be performed, some or all of the following conditions below may be tested for determining whether to include the spatial motion prediction candidate in the merge list.

The prediction list modifier 363 examines 504 if the prediction unit or block covering the spatial motion prediction candidate block is not available for motion prediction. If so, the candidate is not included in the merge list. The reason that the block is not available may be that the block is either coded in intra mode or resides in a different slice or outside of the picture area.

In addition to the common conditions above, for each spatial motion prediction candidate, if any of the following conditions holds, then the candidate is not included in the merge list, otherwise, it is included.

The prediction list modifier 363 determines 506 which spatial motion prediction candidate of the set of spatial motion prediction candidates is in question. If the spatial motion prediction candidate is the block A1, one or more of the following conditions may be examined 508, 510 to determine whether to include this spatial motion prediction candidate in the merge list or not. If the current coding unit 100 is vertically split into two rectangle prediction units 103, 104 as depicted in Figure 10b and the current prediction unit is the second prediction unit 104 in the coding/decoding order (508), this spatial motion prediction candidate is not included in the merge list. If the current coding unit 100 is not vertically split into two rectangle prediction units but it is horizontally split into two rectangle prediction units 101, 102 as depicted in Figure 10a and the current prediction unit is the second prediction unit in the coding/decoding order and the block A1 has the same motion information as the block B1 (510), this spatial motion prediction

Amazon.com, Inc., Amazon.com Services LLC - Ex. 1017, Page 000087

Copy provided by USPTO from the IFW Image Database on 08/17/2012

candidate (block A1) is not included in the merge list. In the example of Figure 10a the second prediction unit is the lower prediction unit 102 of the coding unit 100 and in the example of Figure 10b the second prediction unit is the rightmost prediction unit 104 of the coding unit 100. If none of the conditions above is fulfilled the block A1 is included in the merge list as a spatial motion prediction candidate (524).

If the spatial motion prediction candidate is the block B1, one or more of the following conditions may be examined 512, 514 to determine whether to include this spatial motion prediction candidate in the merge list or not. If the current coding unit 100 is horizontally split into two rectangle prediction units 101, 102 as depicted in Figure 10a and the current prediction unit is the second prediction unit 104 in the coding/decoding order (512), this spatial motion prediction candidate is not included in the merge list. If the current coding unit 100 is not horizontally split into two rectangle prediction units and if the block B1 has the same motion information than the block A1 (514), this spatial motion prediction candidate (block B1) is not included in the merge list. If none of the conditions above is fulfilled the block B1 is included in the merge list as a spatial motion prediction candidate (524).

If the spatial motion prediction candidate is the block B0, this spatial motion prediction candidate is not included in the merge list if the block B0 has the same motion information than the block B1 (516). Otherwise, if the number of spatial motion prediction candidates in the merge list is less than the maximum number of spatial motion prediction candidates, this spatial motion prediction candidate (block B0) is included in the merge list (524).

If the spatial motion prediction candidate is the block A0, this spatial motion prediction candidate is not included in the merge list if the block A0 has the same motion information than the block A1 (518). Otherwise, if the number of spatial motion prediction candidates in the merge list is less than the maximum number of spatial motion prediction candidates, this spatial motion prediction candidate (block A0) is included in the merge list (524).

If the spatial motion prediction candidate is the block B2, this spatial motion prediction candidate is not included in the merge list if the maximum number of spatial motion prediction candidates is four and the other blocks A0, A1, B0, and B1 are all decided to be included in the merge list (520). Otherwise, if the number of spatial motion prediction candidates in the merge list is less than the maximum number of spatial motion prediction candidates, the block B2 is not

Amazon.com, Inc., Amazon.com Services LLC - Ex. 1017, Page 000088

Copy provided by USPTO from the IFW Image Database on 08/17/2012

included in the merge list if the block B2 has the same motion information than the block B1 or the block A1 (522).

Then, after processing the blocks A1, B1, B0, A0 and B2 and including a subset of them in the merge list based on the above described conditions, no more redundancy check between these candidates are performed and remaining temporal motion prediction candidate and/or other possible additional candidates may be processed.

Comparing two blocks whether they have the same motion may be performed by comparing all the elements of the motion information, namely 1) The information whether 'the prediction unit is uni-predicted using only reference picture list0' or 'the prediction unit is uni-predicted using only reference picture list1' or 'the prediction unit is bi-predicted using both reference picture list0 and list1' 2) Motion vector value corresponding to the reference picture list0 3) Reference picture index in the reference picture list0 4) Motion vector value corresponding to the reference picture list1 5) Reference picture index in the reference picture list1.

In some embodiments similar restrictions for comparing candidate pairs can be applied if the current coding unit is coded/decoded by splitting into four or any number of prediction units.

The maximum number of merge list candidates can be any non-zero value. In the example above the merger list candidates were the spatial neighbour blocks A0, A1, B0, B1, B2 and the temporal motion prediction candidate, but there may be more than one temporal motion prediction candidate and also other spatial motion prediction candidates than the spatial neighbour blocks. In some embodiments there may also be other spatial neighbour blocks than the blocks A0, A1, B0, B1, B2.

It is also possible that the maximum number of spatial motion prediction candidates included in the list can be different than four.

In some embodiments the maximum number of merge list candidates and maximum number of spatial motion prediction candidates included in the list can depend on whether a temporal motion vector candidate is included in the list or not.

A different number of spatial motion prediction candidates located at various locations in the current frame can be processed. The locations can be the same as or different than A1, B1, B0, A0 and B2.

Amazon.com, Inc., Amazon.com Services LLC - Ex. 1017, Page 000089

Copy provided by USPTO from the IFW Image Database on 08/17/2012

The decision of including which spatial motion prediction candidates in the list can be realized in two steps. In the first step, some of the candidates are eliminated by checking whether the candidate block is available and/or the candidate block's prediction mode is intra and/or whether the current block is a second prediction unit of a coding unit coded with two prediction units and the candidate has the same motion with the first prediction unit. In the second step, remaining candidates are examined and some or all of them are included in the merge list. The examination in the second step does not include comparing motion information of each possible candidate pair but includes a subset of the possible comparison combinations.

The decisions for the candidates can be taken in any order of A1, B1, B0, A0 and B2 or independently in parallel.

For each candidate and/or a subset of the candidates, the following conditions may also be checked: Whether the candidate block has the same motion as the first prediction unit of the current coding unit when the current coding unit is split into two rectangle prediction units and the current prediction unit is the second prediction unit in the coding/decoding order.

Additional conditions related to various properties of current and/or previous slices and/or current and/or neighbour blocks can be utilized for determining whether to include a candidate in the list.

Motion comparison can be realized by comparing a subset of the whole motion information. For example, only the motion vector values for some or all reference picture lists and/or reference indices for some or all reference picture lists and/or an identifier value assigned to each block to represent its motion information can be compared. The comparison can be an identicality or an equivalence check or comparing the (absolute) difference against a threshold or any other similarity metric.

Conditions for deciding whether a candidate is to be included in the list can include motion information comparison with any subset of the candidates as long as not all possible candidate pairs are compared eventually.

Deciding whether a temporal motion vector candidate is to be included in the list can be based on comparing its motion information with motion information of a subset of the spatial motion vector prediction candidates.

Amazon.com, Inc., Amazon.com Services LLC - Ex. 1017, Page 000090
Copy provided by USPTO from the IFW Image Database on 08/17/2012

When comparing motion information of two blocks, motion information of additional blocks can be considered too. For example, when comparing the block B2 and the block A1, all the blocks between the block B2 and the block A1 (illustrated in Figure 12) are checked whether they have the same motion; and when comparing the block B2 and the block B1, all the blocks between the block B2 and the block B1 (illustrated in Figure 12) are checked whether they have the same motion. This embodiment can be implemented so that the right-most block of each prediction unit or all blocks of each prediction unit may store the information of how many consecutive blocks to the above have the same motion information. Also the bottom-most block of each prediction unit or all blocks of each prediction unit may store the information of how many consecutive blocks to the left have the same motion information. Using this information the condition for not including B0 in the list can be realized by checking if the number of consecutive blocks with the same motion to the left of B0 is greater than 0. The condition for not including A0 in the list can be realized by checking if the number of consecutive blocks with same motion to the above of A0 is greater than 0. The conditions for not including B2 can be modified as follows:

It is not examined whether the block B2 has same motion as the block B1 or whether the block B2 has same motion as the block A1, but how many consecutive blocks exists to the left of the block B1 with the same motion than the block B1 and/or how many consecutive blocks exist above the block A1 with the same motion. If the number of consecutive blocks with the same motion to the left of the block B1 is greater than the number of blocks between B2 and B1, or if the number of consecutive blocks with the same motion above the block A1 is greater than the number of blocks between the block B2 and the block A1, the block B2 is not included in the merge list.

If the above implementation is used, the value of how many consecutive blocks to the left/above have the same motion information can be determined by direct comparison of motion information or checking the prediction mode and/or the merge index if the block employs a merge process.

When coding/decoding the selected merge index, the information whether the merge process is employed for coding/decoding a Skip mode coding unit or an Inter Merge mode prediction unit can be taken into account. For example, if a context adaptive binary arithmetic

Amazon.com, Inc., Amazon.com Services LLC - Ex. 1017, Page 000091

coder (CABAC) is used for entropy coding/decoding, different contexts can be used for the bins depending on the coding mode (Skip mode or inter merge mode) of the current block. Furthermore, assigning two contexts depending on whether the merge process is employed in a Skip mode coding unit or an inter Merge mode prediction unit can be applied for only the most significant bin of the merge index.

During the process of removal of redundant candidates, comparison between motion vector predictor candidates can also be based on any other information than the motion vector values. For example, it can be based on linear or non-linear functions of motion vector values, coding or prediction types of the blocks used to obtain the motion information, block size, the spatial location in the frame/(largest) coding unit/macroblock, the information whether blocks share the same motion with a block, the information whether blocks are in the same coding/prediction unit, etc.

The following pseudo code illustrates an example embodiment of the invention for constructing the merging list.

Inputs to this process are

- a luma location (xP, yP) specifying the top-left luma sample of the current prediction unit relative to the top-left sample of the current picture;
- variables specifying the width and the height of the prediction unit for luma, nPSW and nPSH; and
- a variable PartIdx specifying the index of the current prediction unit within the current coding unit.

Outputs of this process are (with N being replaced by A_0, A_1, B_0, B_1 or B_2 and with X being replaced by 0 or 1)

- the availability flags availableFlagN of the neighbouring prediction units,
- the reference indices refIdxLXN of the neighbouring prediction units,
- the prediction list utilization flags predFlagLXN of the neighbouring prediction units,
- the motion vectors mvLXN of the neighbouring prediction units.

For the derivation of availableFlagN, with N being A_0, A_1, B_0, B_1 or B_2 and (xN, yN) being (xP−1, yP + nPSH), (xP−1, yP + nPSH−1), (xP + nPSW, yP−1), (xP+nPSW−1, yP−1) or (xP−1, yP−1), the following applies.

Amazon.com, Inc., Amazon.com Services LLC - Ex. 1017, Page 000092
Copy provided by USPTO from the IFW Image Database on 03/17/2012

- If one of the following conditions is true, the availableFlagN is set equal to 0, both components mvLXN are set equal to 0, refIdxLXN and predFlagLX[xN, yN] of the prediction unit covering luma location (xN, yN) are assigned respectively to mvLXN, refIdxLXN and predFlagLXN.
  - N is equal to B_2 and $availableFlagA_0 + availableFlagA_1 + availableFlagB_0 + availableFlagB_1$ is equal to 4.
  - The prediction unit covering luma location (xN, yN) is not available or PredMode is MODE_INTRA.
  - N is equal to A1 and PartMode of the current prediction unit is PART_Nx2N or PART_nLx2N or PART_nRx2N and PartIdx is equal to 1.
  - N is equal to A1 and PartMode of the current prediction unit is PART_2NxN or PART_2NxnU or PART_2NxnD and PartIdx is equal to 1 and the prediction units covering luma location (xP+nPSW−1, yP−1) (N = B1) and luma location (xN, yN) (Cand. N) have identical motion parameters:
    - mvLX[xP+nPSW−1, yP−1] == mvLX[xN, yN]
    - refIdxLX[xP+nPSW−1, yP−1] == refIdxLX[xN, yN]
    - predFlagLX[xP+nPSW−1, yP−1] == predFlagLX[xN, yN]
  - N is equal to B1 and PartMode of the current prediction unit is 2NxN or PART_2NxnU or PART_2NxnD and PartIdx is equal to 1.
  - N is equal to B1 and the prediction units covering luma location (xP−1, yP+nPSH−1) (N = A1) and luma location (xN, yN) (Cand. N) have identical motion parameters:
    - mvLX[xP−1, yP+nPSH−1] == mvLX[xN, yN]
    - refIdxLX[xP−1, yP+nPSH−1] == refIdxLX[xN, yN]
    - predFlagLX[xP−1, yP+nPSH−1] == predFlagLX[xN, yN]
  - N is equal to B0 and the prediction units covering luma location (xP+nPSW−1, yP−1) (N = B1) and luma location (xN, yN) (Cand. N) have identical motion parameters:
    - mvLX[xP+nPSW−1, yP−1] == mvLX[xN, yN]
    - refIdxLX[xP+nPSW−1, yP−1] == refIdxLX[xN, yN]
    - predFlagLX[xP+nPSW−1, yP−1] == predFlagLX[xN, yN]

Amazon.com, Inc., Amazon.com Services LLC - Ex. 1017, Page 000093
Copy provided by USPTO from the IFW Image Database on 08/17/2012

- N is equal to A0 and the prediction units covering luma location (xP−1, yP+nPSH−1) (N = A1) and luma location (xN, yN) (Cand. N) have identical motion parameters:
  - mvLX[xP−1, yP+nPSH−1] == mvLX[xN, yN]
  - refIdxLX[xP−1, yP+nPSH−1] == refIdxLX[xN, yN]
  - predFlagLX[xP−1, yP+nPSH−1] == predFlagLX[xN, yN]
- N is equal to B2 and the prediction units covering luma location (xP+nPSW−1, yP−1) (N = B1) and luma location (xN, yN) (Cand. N) have identical motion parameters:
  - mvLX[xP+nPSW−1, yP−1] == mvLX[xN, yN]
  - refIdxLX[xP+nPSW−1, yP−1] == refIdxLX[xN, yN]
  - predFlagLX[xP+nPSW−1, yP−1] == predFlagLX[xN, yN]
- N is equal to B2 and the prediction units covering luma location (xP−1, yP+nPSH−1) (N = A1) and luma location (xN, yN) (Cand. N) have identical motion parameters:
  - mvLX[xP−1, yP+nPSH−1] == mvLX[xN, yN]
  - refIdxLX[xP−1, yP+nPSH−1] == refIdxLX[xN, yN]
  - predFlagLX[xP−1, yP+nPSH−1] == predFlagLX[xN, yN]
- PartMode of the current prediction unit is PART_NxN and PartIdx is equal to 3 and the prediction units covering luma location (xP−1, yP) (PartIdx = 2) and luma location (xP−1, yP−1) (PartIdx = 0) have identical motion parameters:
  - mvLX[xP−1, yP] == mvLX[xP−1, yP−1]
  - refIdxLX[xP−1, yP] == refIdxLX[xP−1, yP−1]
  - predFlagLX[xP−1, yP] == predFlagLX[xP−1, yP−1]

  and the prediction units covering luma location (xP, yP−1) (PartIdx = 1) and luma location (xN, yN) (Cand. N) have identical motion parameters:
  - mvLX[xP, yP−1] == mvLX[xN, yN]
  - refIdxLX[xP, yP−1] == refIdxLX[xN, yN]
  - predFlagLX[xP, yP−1] == predFlagLX[xN, yN]
- PartMode of the current prediction unit is PART_NxN and PartIdx is equal to 3 and the prediction units covering luma location (xP, yP−1) (PartIdx = 1) and luma location (xP−1, yP−1) (PartIdx = 0) have identical motion parameters:
  - mvLX[xP, yP−1] == mvLX[xP−1, yP−1]

Amazon.com, Inc., Amazon.com Services LLC - Ex. 1017, Page 000094

Copy provided by USPTO from the IFW Image Database

- refIdxLX[xP, yP−1] == refIdxLX[xP−1, yP−1]
- predFlagLX[xP, yP−1] == predFlagLX[xP−1, yP−1]

and the prediction units covering luma location (xP−1, yP) (PartIdx = 2) and luma location (xN, yN) (Cand. N) have identical motion parameters:

- mvLX[xP−1, yP] == mvLX[xN, yN]
- refIdxLX[xP−1, yP] == refIdxLX[xN, yN]
- predFlagLX[xP−1, yP] == predFlagLX[xN, yN]

- Otherwise, availableFlagN is set equal to 1 and the variables mvLX[xN, yN], refIdxLX[xN, yN] and predFlagLX[xN, yN] of the prediction unit covering luma location (xN, yN) are assigned respectively to mvLXN, refIdxLXN and predFlagLXN.

For the motion vector predictor candidate list generation process, each list candidate can include more information than the motion vector value, such as the reference lists used, the reference frames used in each list and motion vector for each list.

When all motion vector candidates have been examined, one motion vector is selected to be used as the motion vector for the current block. The motion vector selector 364 may examine different motion vectors in the list and determine which motion vector provides the most efficient encoding result, or the selection of the motion vector may be based on to other criteria as well. Information of the selected motion vector is provided for the mode selector for encoding and transmission to the decoder or for storage when the mode selector determines to use inter prediction for the current block. The information may include the index of the motion vector in the list, and/or motion vector parameters or other appropriate information.

The selected motion vector and the block relating to the motion vector is used to generate the prediction representation of the image block 312 which is provided as the output of the mode selector. The output may be used by the first summing device 321 to produce the first prediction error signal 320, as was described above.

The selected motion vector predictor candidate can be modified by adding a motion vector difference or can be used directly as the motion vector of the block. Moreover, after the motion compensation is performed by using the selected motion vector predictor candidate, the residual signal of the block can be transform coded or skipped to be coded.

Amazon.com, Inc., Amazon.com Services LLC - Ex. 1017, Page 000095

Copy provided by USPTO from the IFW Image Database on 08/17/2012

Although the embodiments above have been described with respect to the size of the macroblock being 16x16 pixels, it would be appreciated that the methods and apparatus described may be configured to handle macroblocks of different pixel sizes.

In the following the operation of an example embodiment of the decoder 600 is depicted in more detail with reference to Figure 7.

At the decoder side similar operations are performed to reconstruct the image blocks. Figure 7 shows a block diagram of a video decoder 700 suitable for employing embodiments of the invention and Figures 8a and 8b show a flow diagram of an example of a method in the video decoder. The bitstream to be decoded may be received from the encoder, from a network element, from a storage medium or from another source. The decoder is aware of the structure of the bitstream so that it can determine the meaning of the entropy coded codewords and may decode the bitstream by an entropy decoder 701 which performs entropy decoding on the received signal. The entropy decoder thus performs the inverse operation to the entropy encoder 330 of the encoder described above. The entropy decoder 701 outputs the results of the entropy decoding to a prediction error decoder 702 and a pixel predictor 704.

In some embodiments the entropy coding may not be used but another channel encoding may be in use, or the encoded bitstream may be provided to the decoder 700 without channel encoding. The decoder 700 may comprise a corresponding channel decoder to obtain the encoded codewords from the received signal.

The pixel predictor 704 receives the output of the entropy decoder 701. The output of the entropy decoder 701 may include an indication on the prediction mode used in encoding the current block. A predictor selector 714 within the pixel predictor 704 determines that an intra-prediction or an inter-prediction is to be carried out. The predictor selector 714 may furthermore output a predicted representation of an image block 716 to a first combiner 713. The predicted representation of the image block 716 is used in conjunction with the reconstructed prediction error signal 712 to generate a preliminary reconstructed image 718. The preliminary reconstructed image 718 may be used in the predictor 714 or may be passed to a filter 720. The filter 720, if used, applies a filtering which outputs a final reconstructed signal 722. The final reconstructed signal 722 may be stored in a reference frame memory 724, the reference frame memory 724 further being connected to the predictor 714 for prediction operations.

Amazon.com, Inc., Amazon.com Services LLC - Ex. 1017, Page 000096
Copy provided by USPTO from the IFW Image Database on 08/17/2012

Also the prediction error decoder 702 receives the output of the entropy decoder 701. A dequantizer 792 of the prediction error decoder 702 may dequantize the output of the entropy decoder 701 and the inverse transform block 793 may perform an inverse transform operation to the dequantized signal output by the dequantizer 792. The output of the entropy decoder 701 may also indicate that prediction error signal is not to be applied and in this case the prediction error decoder produces an all zero output signal.

The decoder selects the 16x16 pixel residual macroblock to reconstruct. This residual macroblock is also called as a current block.

The decoder may receive information on the encoding mode used in encoding of the current block. The indication is decoded, when necessary, and provided to the reconstruction processor 791 of the prediction selector 714. The reconstruction processor 791 examines the indication and selects one of the intra-prediction mode(s), if the indication indicates that the block has been encoded using intra-prediction, or the inter-prediction mode, if the indication indicates that the block has been encoded using inter-prediction.

For inter-prediction mode the reconstruction processor 791 may comprise one or more elements corresponding to the prediction processor 362 of the encoder, such as a motion vector definer, a prediction list modifier and/or a motion vector selector.

The reconstruction processor 791 initializes a motion vector prediction list to default values in block 800. As was the case in the encoding part, in this example the spatial motion prediction candidates are the spatial neighbour blocks A0, A1, B0, B1, B2 and these spatial motion prediction candidates are processed in the same predetermined order than in the encoder: A1, B1, B0, A0 and B2. The first spatial motion prediction candidate to be selected for further examination is thus A1. Before further examination is performed for the selected spatial motion prediction candidate, it is examined whether the merge list already contains a maximum number of spatial motion prediction candidates. If the number of spatial motion prediction candidates in the merge list is not less than the maximum number, the selected spatial motion prediction candidate is not included in the merge list and the process of constructing the merge list can be stopped 826. On the other hand, if the number of spatial motion prediction candidates in the merge list is less than the maximum number, a further analyses of the selected spatial motion prediction candidate is performed (blocks 804-822).

Amazon.com, Inc., Amazon.com Services LLC - Ex. 1017, Page 000097

Copy provided by USPTO from the IFW Image Database on 08/17/2012

The decoder examines 804 if the prediction unit or block covering the spatial motion prediction candidate block is not available for motion prediction. If so, the candidate is not included in the merge list. The reason that the block is not available may be that the block is either coded in intra mode or resides in a different slice or outside of the picture area.

In addition to the common conditions above, for each spatial motion prediction candidate, if any of the following conditions holds, then the candidate is not included in the merge list, otherwise, it is included.

The decoder determines 806 which spatial motion prediction candidate of the set of spatial motion prediction candidates is in question. If the spatial motion prediction candidate is the block A1, one or more of the following conditions may be examined 808, 810 to determine whether to include this spatial motion prediction candidate in the merge list or not. If the current coding unit 100 is vertically split into two rectangle prediction units 103, 104 as depicted in Figure 10b and the current prediction unit is the second prediction unit 104 in the coding/decoding order (808), this spatial motion prediction candidate is not included in the merge list. If the current coding unit 100 is not vertically split into two rectangle prediction units but it is horizontally split into two rectangle prediction units 101, 102 as depicted in Figure 10a and the current prediction unit is the second prediction unit in the coding/decoding order and the block A1 has the same motion information as the block B1 (810), this spatial motion prediction candidate (block A1) is not included in the merge list. In the example of Figure 10a the second prediction unit is the lower prediction unit 102 of the coding unit 100 and in the example of Figure 10b the second prediction unit is the rightmost prediction unit 104 of the coding unit 100. If none of the conditions above is fulfilled the block A1 is included in the merge list as a spatial motion prediction candidate (824).

If the spatial motion prediction candidate is the block B1, one or more of the following conditions may be examined 812, 814 to determine whether to include this spatial motion prediction candidate in the merge list or not. If the current coding unit 100 is horizontally split into two rectangle prediction units 101, 102 as depicted in Figure 10a and the current prediction unit is the second prediction unit 104 in the coding/decoding order (812), this spatial motion prediction candidate is not included in the merge list. If the current coding unit 100 is not horizontally split into two rectangle prediction units and if the block B1 has the same motion

Amazon.com, Inc., Amazon.com Services LLC - Ex. 1017, Page 000098
Copy provided by USPTO from the IFW Image Database on 08/17/2012

information than the block A1 (814), this spatial motion prediction candidate (block B1) is not included in the merge list. If none of the conditions above is fulfilled the block B1 is included in the merge list as a spatial motion prediction candidate (824).

If the spatial motion prediction candidate is the block B0, this spatial motion prediction candidate is not included in the merge list if the block B0 has the same motion information than the block B1 (816). Otherwise, if the number of spatial motion prediction candidates in the merge list is less than the maximum number of spatial motion prediction candidates, this spatial motion prediction candidate (block B0) is included in the merge list (824).

If the spatial motion prediction candidate is the block A0, this spatial motion prediction candidate is not included in the merge list if the block A0 has the same motion information than the block A1 (818). Otherwise, if the number of spatial motion prediction candidates in the merge list is less than the maximum number of spatial motion prediction candidates, this spatial motion prediction candidate (block A0) is included in the merge list (824).

If the spatial motion prediction candidate is the block B2, this spatial motion prediction candidate is not included in the merge list if the maximum number of spatial motion prediction candidates is four and the other blocks A0, A1, B0, and B1 are all decided to be included in the merge list (820). Otherwise, if the number of spatial motion prediction candidates in the merge list is less than the maximum number of spatial motion prediction candidates, the block B2 is not included in the merge list if the block B2 has the same motion information than the block B1 or the block A1 (822).

Then, after processing the blocks A1, B1, B0, A0 and B2 and including a subset of them in the merge list based on the above described conditions, no more redundancy check between these candidates are performed and remaining temporal motion prediction candidate and/or other possible additional candidates may be processed.

When the merge list has been constructed the decoder may use 828 the indication of the motion vector received from the encoder to select the motion vector for decoding the current block. The indication may be, for example, an index to the merge list.

Basically, after the reconstruction processor 791 has constructed the merge list, it would correspond with the merge list constructed by the encoder if the reconstruction processor 791 has the same information available than the encoder had. If some information has been lost during

Amazon.com, Inc., Amazon.com Services LLC - Ex. 1017, Page 000099

Copy provided by USPTO from the IFW Image Database on 08/17/2018

transmission the information from the encoder to the decoder, it may affect the generation of the merge list in the decoder 700.

The above examples describe the operation mainly in the merge mode but the encoder and decoder may also operate in other modes.

The embodiments of the invention described above describe the codec in terms of separate encoder and decoder apparatus in order to assist the understanding of the processes involved. However, it would be appreciated that the apparatus, structures and operations may be implemented as a single encoder-decoder apparatus/structure/operation. Furthermore in some embodiments of the invention the coder and decoder may share some or all common elements.

Although the above examples describe embodiments of the invention operating within a codec within an electronic device, it would be appreciated that the invention as described below may be implemented as part of any video codec. Thus, for example, embodiments of the invention may be implemented in a video codec which may implement video coding over fixed or wired communication paths.

Thus, user equipment may comprise a video codec such as those described in embodiments of the invention above.

It shall be appreciated that the term user equipment is intended to cover any suitable type of wireless user equipment, such as mobile telephones, portable data processing devices or portable web browsers.

Furthermore elements of a public land mobile network (PLMN) may also comprise video codecs as described above.

In general, the various embodiments of the invention may be implemented in hardware or special purpose circuits, software, logic or any combination thereof. For example, some aspects may be implemented in hardware, while other aspects may be implemented in firmware or software which may be executed by a controller, microprocessor or other computing device, although the invention is not limited thereto. While various aspects of the invention may be illustrated and described as block diagrams, flow charts, or using some other pictorial representation, it is well understood that these blocks, apparatus, systems, techniques or methods described herein may be implemented in, as non-limiting examples, hardware, software,

Amazon.com, Inc., Amazon.com Services LLC - Ex. 1017, Page 000100

Copy provided by USPTO from the IFW Image Database on 08/17/2012

firmware, special purpose circuits or logic, general purpose hardware or controller or other computing devices, or some combination thereof.

The embodiments of this invention may be implemented by computer software executable by a data processor of the mobile device, such as in the processor entity, or by hardware, or by a combination of software and hardware. Further in this regard it should be noted that any blocks of the logic flow as in the Figures may represent program steps, or interconnected logic circuits, blocks and functions, or a combination of program steps and logic circuits, blocks and functions. The software may be stored on such physical media as memory chips, or memory blocks implemented within the processor, magnetic media such as hard disk or floppy disks, and optical media such as for example DVD and the data variants thereof, CD.

The memory may be of any type suitable to the local technical environment and may be implemented using any suitable data storage technology, such as semiconductor based memory devices, magnetic memory devices and systems, optical memory devices and systems, fixed memory and removable memory. The data processors may be of any type suitable to the local technical environment, and may include one or more of general purpose computers, special purpose computers, microprocessors, digital signal processors (DSPs) and processors based on multi core processor architecture, as non limiting examples.

Embodiments of the inventions may be practiced in various components such as integrated circuit modules. The design of integrated circuits is by and large a highly automated process. Complex and powerful software tools are available for converting a logic level design into a semiconductor circuit design ready to be etched and formed on a semiconductor substrate.

Programs, such as those provided by Synopsys, Inc. of Mountain View, California and Cadence Design, of San Jose, California automatically route conductors and locate components on a semiconductor chip using well established rules of design as well as libraries of pre stored design modules. Once the design for a semiconductor circuit has been completed, the resultant design, in a standardized electronic format (e.g., Opus, GDSII, or the like) may be transmitted to a semiconductor fabrication facility or "fab" for fabrication.

The foregoing description has provided by way of exemplary and non-limiting examples a full and informative description of the exemplary embodiment of this invention. However, various modifications and adaptations may become apparent to those skilled in the relevant arts

Amazon.com, Inc., Amazon.com Services LLC - Ex. 1017, Page 000101

Copy provided by USPTO from the IFW Image Database on 08/17/2012

in view of the foregoing description, when read in conjunction with the accompanying drawings and the appended claims. However, all such and similar modifications of the teachings of this invention will still fall within the scope of this invention.

In the following some examples will be provided.

In some embodiments a method comprises:

receiving a block of pixels including a prediction unit; determining a set of spatial motion vector prediction candidates for the block of pixels; the spatial motion vector prediction candidates being provided with motion information;

selecting a first spatial motion vector prediction candidate from the set of spatial motion vector prediction candidates as a potential spatial motion vector prediction candidate to be included in a merge list for the prediction unit;

determining a subset of spatial motion vector predictions based on the location of the block associated with the first spatial motion vector prediction candidate;

comparing motion information of the first spatial motion vector prediction candidate with motion information of the spatial motion vector prediction candidate in the determined subset of spatial motion vector prediction candidates;

if at least one of the comparisons indicates that the motion vector information of the spatial motion vector prediction candidates correspond with each other, excluding the first spatial motion vector prediction candidate from the merge list.

In some embodiments the method comprises including neighbouring blocks of the received block of pixels in the set of spatial motion vector prediction candidates.

In some embodiments the method comprises constructing the set of spatial motion vector predictions by using motion vectors of one or more encoded blocks in a same frame than the block of pixels.

In some embodiments the method comprises selecting spatial motion vector prediction candidates from the set of spatial motion vector prediction candidates as the potential spatial motion vector prediction candidate in a predetermined order.

In some embodiments the method comprises comparing motion information of the potential spatial motion vector prediction candidate with motion information of at most one other

Amazon.com, Inc., Amazon.com Services LLC - Ex. 1017, Page 000102

Copy provided by USPTO from the IFW Image Database on 08/17/2010

spatial motion vector prediction candidate of the set of spatial motion vector prediction candidates.

In some embodiments the method comprises prediction unit and a second prediction unit; and if so, excluding the potential spatial motion vector prediction candidate from the merge list if the prediction unit is the second prediction unit.

In some embodiments the method comprises

determining a maximum number of spatial motion vector prediction candidates to be included in a merge list; and

limiting the number of spatial motion vector prediction candidates in the merge list smaller or equal to the maximum number .

In some embodiments the method comprises

examining, if the number of spatial motion vector prediction candidates in the merge list smaller than the maximum number;

if so, examining whether a prediction unit to which the potential spatial motion vector prediction candidate belongs is available for motion prediction;

if so, performing at least one of the following:

for the potential spatial motion vector prediction candidate on the left side of the prediction unit, excluding the potential spatial motion vector prediction candidate from the merge list if any of the following conditions are fulfilled:

- the received block of pixels is vertically divided into a first prediction unit and a second prediction unit, and the prediction unit is the second prediction unit;
- the received block of pixels is horizontally divided into a first prediction unit and a second prediction unit, and if the prediction unit is the second prediction unit, and the potential spatial motion vector prediction candidate has essentially similar motion information than the spatial motion vector prediction candidate above the prediction unit;

for the potential spatial motion vector prediction candidate above the prediction unit, excluding the potential spatial motion vector prediction candidate from the merge list if any of the following conditions are fulfilled:

Amazon.com, Inc., Amazon.com Services LLC - Ex. 1017, Page 000103

Copy provided by USPTO from the IFW Image Database on 08/17/2012

- the received block of pixels is horizontally divided into a first prediction unit and a second prediction unit, and the prediction unit is the second prediction unit;
- the potential spatial motion vector prediction candidate has essentially similar motion information than the spatial motion vector prediction candidate on the left side of the prediction unit;

for the potential spatial motion vector prediction candidate, which is on the right side of the potential spatial motion vector prediction candidate above the prediction unit, excluding the potential spatial motion vector prediction candidate from the merge list if the potential spatial motion vector prediction candidate has essentially similar motion information than the spatial motion vector prediction candidate above the prediction unit;

for the potential spatial motion vector prediction candidate, which is below the potential spatial motion vector prediction candidate on the left side of the prediction unit, excluding the potential spatial motion vector prediction candidate from the merge list if the potential spatial motion vector prediction candidate has essentially similar motion information than the spatial motion vector prediction candidate on the left side of the prediction unit;

for the potential spatial motion vector prediction candidate cornerwise neighbouring the prediction unit, excluding the potential spatial motion vector prediction candidate from the merge list if any of the following conditions are fulfilled:

- all the other potential spatial motion vector prediction candidates have been included in the merge list;
- the potential spatial motion vector prediction candidate has essentially similar motion information than the spatial motion vector prediction candidate above the prediction unit;
- the potential spatial motion vector prediction candidate has essentially similar motion information than the spatial motion vector prediction candidate on the left side of the prediction unit.

In some embodiments the method comprises including a temporal motion prediction candidate into the merge list.

Amazon.com, Inc., Amazon.com Services LLC - Ex. 1017, Page 000104
Copy provided by USPTO from the IFW Image Database on 08/17/2012

In some embodiments the method comprises selecting one motion vector prediction candidate from the merge list to represent a motion vector prediction for the block of pixels.

In some embodiments a method according to the second aspect comprises:

receiving an encoded block of pixels including a prediction unit;

determining a set of spatial motion vector prediction candidates for the encoded block of pixels; the spatial motion vector prediction candidates being provided with motion information;

selecting a first spatial motion vector prediction candidate from the set of spatial motion vector prediction candidates as a potential spatial motion vector prediction candidate to be included in a merge list for the prediction unit;

determining a subset of spatial motion vector predictions based on the location of the block associated with the first spatial motion vector prediction candidate;

comparing motion information of the first spatial motion vector prediction candidate with motion information of another spatial motion vector prediction candidate of the set of spatial motion vector prediction candidates;

if at least one of the comparisons indicates that the motion vector information of the spatial motion vector prediction candidates correspond with each other, excluding the first spatial motion vector prediction candidate from the merge list.

In some embodiments the method comprises including neighbouring blocks of the received encoded block of pixels in the set of spatial motion vector prediction candidates.

In some embodiments the method comprises constructing the set of spatial motion vector predictions by using motion vectors of one or more decoded blocks in a same frame than the received encoded block of pixels.

In some embodiments the method comprises selecting spatial motion vector prediction candidates from the set of spatial motion vector prediction candidates as the potential spatial motion vector prediction candidate in a predetermined order.

In some embodiments the method comprises comparing motion information of the potential spatial motion vector prediction candidate with motion information of at most one other spatial motion vector prediction candidate of the set of spatial motion vector prediction candidates.

Amazon.com, Inc., Amazon.com Services LLC - Ex. 1017, Page 000105
Copy provided by USPTO from the IFW Image Database on 08/17/2012

In some embodiments the method comprises examining whether the received encoded block of pixels is divided into a first prediction unit and a second prediction unit; and if so, excluding the potential spatial motion vector prediction candidate from the merge list if the prediction unit is the second prediction unit.

In some embodiments the method comprises

determining a maximum number of spatial motion vector prediction candidates to be included in a merge list; and

limiting the number of spatial motion vector prediction candidates in the merge list smaller or equal to the maximum number.

In some embodiments the method comprises

examining, if the number of spatial motion vector prediction candidates in the merge list smaller than the maximum number;

if so, examining whether a prediction unit to which the potential spatial motion vector prediction candidate belongs is available for motion prediction;

if so, performing at least one of the following:

for the potential spatial motion vector prediction candidate on the left side of the prediction unit, excluding the potential spatial motion vector prediction candidate from the merge list if any of the following conditions are fulfilled:

- the received encoded block of pixels is vertically divided into a first prediction unit and a second prediction unit, and the prediction unit is the second prediction unit;
- the received encoded block of pixels is horizontally divided into a first prediction unit and a second prediction unit, and if the prediction unit is the second prediction unit, and the potential spatial motion vector prediction candidate has essentially similar motion information than the spatial motion vector prediction candidate above the prediction unit;

for the potential spatial motion vector prediction candidate above the prediction unit, excluding the potential spatial motion vector prediction candidate from the merge list if any of the following conditions are fulfilled:

Amazon.com, Inc., Amazon.com Services LLC - Ex. 1017, Page 000106

Copy provided by USPTO from the IFW Image Database on 08/17/2012

- the received encoded block of pixels is horizontally divided into a first prediction unit and a second prediction unit, and the prediction unit is the second prediction unit;
- the potential spatial motion vector prediction candidate has essentially similar motion information than the spatial motion vector prediction candidate on the left side of the prediction unit;

for the potential spatial motion vector prediction candidate, which is on the right side of the potential spatial motion vector prediction candidate above the prediction unit, excluding the potential spatial motion vector prediction candidate from the merge list if the potential spatial motion vector prediction candidate has essentially similar motion information than the spatial motion vector prediction candidate above the prediction unit;

for the potential spatial motion vector prediction candidate, which is below the potential spatial motion vector prediction candidate on the left side of the prediction unit, excluding the potential spatial motion vector prediction candidate from the merge list if the potential spatial motion vector prediction candidate has essentially similar motion information than the spatial motion vector prediction candidate on the left side of the prediction unit;

for the potential spatial motion vector prediction candidate cornerwise neighbouring the prediction unit, excluding the potential spatial motion vector prediction candidate from the merge list if any of the following conditions are fulfilled:

- all the other potential spatial motion vector prediction candidates have been included in the merge list;
- the potential spatial motion vector prediction candidate has essentially similar motion information than the spatial motion vector prediction candidate above the prediction unit;
- the potential spatial motion vector prediction candidate has essentially similar motion information than the spatial motion vector prediction candidate on the left side of the prediction unit.

In some embodiments the method comprises including a temporal motion prediction candidate into the merge list.

Amazon.com, Inc., Amazon.com Services LLC - Ex. 1017, Page 000107
Copy provided by USPTO from the IFW Image Database on 08/17/2012

In some embodiments the method comprises selecting one motion vector prediction candidate from the merge list to represent a motion vector prediction for the received encoded block of pixels.

In some embodiments an apparatus according to the third aspect comprises a processor and a memory including computer program code, the memory and the computer program code configured to, with the processor, cause the apparatus to:

receive a block of pixels

including a prediction unit;

determining a set of spatial motion vector prediction candidates for the block of pixels; the spatial motion vector prediction candidates being provided with motion information;

selecting a first spatial motion vector prediction candidate from the set of spatial motion vector prediction candidates as a potential spatial motion vector prediction candidate to be included in a merge list for the prediction unit;

determining a subset of spatial motion vector predictions based on the location of the block associated with the first spatial motion vector prediction candidate;

comparing motion information of the first spatial motion vector prediction candidate with motion information of the spatial motion vector prediction candidate in the determined subset of spatial motion vector prediction candidates;

if at least one the comparisons indicates that the motion vector information of the spatial motion vector prediction candidates correspond with each other, excluding the first spatial motion vector prediction candidate from the merge list.

In some embodiments an apparatus according to the fourth aspect comprises a processor and a memory including computer program code, the memory and the computer program code configured to, with the processor, cause the apparatus to:

receive an encoded block of pixels including a prediction unit;

determine a set of spatial motion vector prediction candidates for the encoded block of pixels; the spatial motion vector prediction candidates being provided with motion information;

select a first spatial motion vector prediction candidate from the set of spatial motion vector prediction candidates as a potential spatial motion vector prediction candidate to be included in a merge list for the prediction unit;

Amazon.com, Inc., Amazon.com Services LLC - Ex. 1017, Page 000108
Copy provided by USPTO from the IFW Image Database on 08/17/2012

determine a subset of spatial motion vector predictions based on the location of the block associated with the first spatial motion vector prediction candidate;

compare motion information of the first spatial motion vector prediction candidate with motion information of the spatial motion vector prediction candidate in the determined subset of spatial motion vector prediction candidates;

exclude the first spatial motion vector prediction candidate from the merge list, if at least one of the comparisons indicates that the motion vector information of the spatial motion vector prediction candidates correspond with each other

In some embodiments a storage medium having stored thereon a computer program code a computer executable program code for use by an encoder, said program codes comprise instructions for use by an encoder, said program code comprises instructions for:

receiving a block of pixels including a prediction unit;

determining a set of spatial motion vector prediction candidates for the block of pixels; the spatial motion vector prediction candidates being provided with motion information;

selecting a first spatial motion vector prediction candidate from the set of spatial motion vector prediction candidates as a potential spatial motion vector prediction candidate to be included in a merge list for the prediction unit;

determining a subset of spatial motion vector predictions based on the location of the block associated with the first spatial motion vector prediction candidate;

comparing motion information of the first spatial motion vector prediction candidate with motion information of the spatial motion vector prediction candidate in the determined subset of spatial motion vector prediction candidates;

if at least one of the comparisons indicates that the motion vector information of the spatial motion vector prediction candidates correspond with each other, excluding the first spatial motion vector prediction candidate from the merge list.

In some embodiments a storage medium having stored thereon a computer program code a computer executable program code for use by an encoder, said program codes comprise instructions for use by an encoder, said program code comprises instructions for:

receiving an encoded block of pixels including a prediction unit;

Amazon.com, Inc., Amazon.com Services LLC - Ex. 1017, Page 000109
Copy provided by USPTO from the IFW Image Database on 08/17/2012

determining a set of spatial motion vector prediction candidates for the encoded block of pixels; the spatial motion vector prediction candidates being provided with motion information;

selecting a first spatial motion vector prediction candidate from the set of spatial motion vector prediction candidates as a potential spatial motion vector prediction candidate to be included in a merge list for the prediction unit;

determining a subset of spatial motion vector predictions based on the location of the block associated with the first spatial motion vector prediction candidate;

comparing motion information of the first spatial motion vector prediction candidate with motion information of the spatial motion vector prediction candidate in the determined subset of spatial motion vector prediction candidates;

if at least one of the comparisons indicates that the motion vector information of the spatial motion vector prediction candidates correspond with each other, excluding the first spatial motion vector prediction candidate from the merge list.

In some embodiments an apparatus comprises:

means for receiving a block of pixels including a prediction unit;

means for selecting a first spatial motion vector prediction candidate from the set of spatial motion vector prediction candidates as a potential spatial motion vector prediction candidate to be included in a merge list for the prediction unit;

means for determining a subset of spatial motion vector predictions based on the location of the block associated with the first spatial motion vector prediction candidate;

means for comparing motion information of the first spatial motion vector prediction candidate with motion information of the spatial motion vector prediction candidate in the determined subset of spatial motion vector prediction candidates;

means for excluding the first spatial motion vector prediction candidate from the merge list, if at least one of the comparisons indicates that the motion vector information of the spatial motion vector prediction candidates correspond with each other.

In some embodiments an apparatus comprises:

means for receiving an encoded block of pixels including a prediction unit;

Amazon.com, Inc., Amazon.com Services LLC - Ex. 1017, Page 000110
Copy provided by USPTO from the IFW Image Database on 08/17/2012

means for determining a set of spatial motion vector prediction candidates for the encoded block of pixels; the spatial motion vector prediction candidates being provided with motion information;

means for selecting a first spatial motion vector prediction candidate from the set of spatial motion vector prediction candidates as a potential spatial motion vector prediction candidate to be included in a merge list for the prediction unit;

means for determining a subset of spatial motion vector predictions based on the location of the block associated with the first spatial motion vector prediction candidate;

means for comparing motion information of the first spatial motion vector prediction candidate with motion information of the spatial motion vector prediction candidate in the determined subset of spatial motion vector prediction candidates;

means for excluding the first spatial motion vector prediction candidate from the merge list, if at least one of the comparisons indicates that the motion vector information of the spatial motion vector prediction candidates correspond with each other.

Amazon.com, Inc., Amazon.com Services LLC - Ex. 1017, Page 000111
Copy provided by USPTO from the IFW Image

Claims:

1. A method comprising:

receiving a block of pixels including a prediction unit;

determining a set of spatial motion vector prediction candidates for the block of pixels; the spatial motion vector prediction candidates being provided with motion information;

selecting a first spatial motion vector prediction candidate from the set of spatial motion vector prediction candidates as a potential spatial motion vector prediction candidate to be included in a merge list for the prediction unit;

determining a subset of spatial motion vector predictions based on the location of the block associated with the first spatial motion vector prediction candidate;

comparing motion information of the first spatial motion vector prediction candidate with motion information of the spatial motion vector prediction candidate in the determined subset of spatial motion vector prediction candidates;

if at least one of the comparisons indicates that the motion vector information of the spatial motion vector prediction candidates correspond with each other, excluding the first spatial motion vector prediction candidate from the merge list.

2. The method according to claim 1, the determining comprising including neighbouring blocks of the received block of pixels in the set of spatial motion vector prediction candidates.

3. The method according to claim 1 or 2 comprising constructing the set of spatial motion vector predictions by using motion vectors of one or more encoded blocks in a same frame than the block of pixels.

4. The method according to any of the claims 1 to 3 comprising selecting spatial motion vector prediction candidates from the set of spatial motion vector prediction candidates as the potential spatial motion vector prediction candidate in a predetermined order.

Amazon.com, Inc., Amazon.com Services LLC - Ex. 1017, Page 000112

5. The method according to any of the claims 1 to 4, comprising comparing motion information of the potential spatial motion vector prediction candidate with motion information of at most one other spatial motion vector prediction candidate of the set of spatial motion vector prediction candidates.

6. The method according to any of the claims 1 to 5 comprising examining whether the received block of pixels is divided into a first prediction unit and a second prediction unit; and if so, excluding the potential spatial motion vector prediction candidate from the merge list if the prediction unit is the second prediction unit.

7. The method according to any of the claims 1 to 6, further comprising

determining a maximum number of spatial motion vector prediction candidates to be included in a merge list; and

limiting the number of spatial motion vector prediction candidates in the merge list smaller or equal to the maximum number .

8. The method according to any of the claims 1 to 7 comprising:

examining, if the number of spatial motion vector prediction candidates in the merge list smaller than the maximum number;

if so, examining whether a prediction unit to which the potential spatial motion vector prediction candidate belongs is available for motion prediction;

if so, performing at least one of the following:

for the potential spatial motion vector prediction candidate on the left side of the prediction unit, excluding the potential spatial motion vector prediction candidate from the merge list if any of the following conditions are fulfilled:

- the received block of pixels is vertically divided into a first prediction unit and a second prediction unit, and the prediction unit is the second prediction unit;
- the received block of pixels is horizontally divided into a first prediction unit and a second prediction unit, and if the prediction unit is the

Amazon.com, Inc., Amazon.com Services LLC - Ex. 1017, Page 000113

second prediction unit, and the potential spatial motion vector prediction candidate has essentially similar motion information than the spatial motion vector prediction candidate above the prediction unit;

for the potential spatial motion vector prediction candidate above the prediction unit, excluding the potential spatial motion vector prediction candidate from the merge list if any of the following conditions are fulfilled:

- the received block of pixels is horizontally divided into a first prediction unit and a second prediction unit, and the prediction unit is the second prediction unit;
- the potential spatial motion vector prediction candidate has essentially similar motion information than the spatial motion vector prediction candidate on the left side of the prediction unit;

for the potential spatial motion vector prediction candidate, which is on the right side of the potential spatial motion vector prediction candidate above the prediction unit, excluding the potential spatial motion vector prediction candidate from the merge list if the potential spatial motion vector prediction candidate has essentially similar motion information than the spatial motion vector prediction candidate above the prediction unit;

for the potential spatial motion vector prediction candidate, which is below the potential spatial motion vector prediction candidate on the left side of the prediction unit, excluding the potential spatial motion vector prediction candidate from the merge list if the potential spatial motion vector prediction candidate has essentially similar motion information than the spatial motion vector prediction candidate on the left side of the prediction unit;

for the potential spatial motion vector prediction candidate cornerwise neighbouring the prediction unit, excluding the potential spatial motion vector prediction candidate from the merge list if any of the following conditions are fulfilled:

- all the other potential spatial motion vector prediction candidates have been included in the merge list;
- the potential spatial motion vector prediction candidate has essentially similar motion information than the spatial motion vector prediction candidate above the prediction unit;

Amazon.com, Inc., Amazon.com Services LLC - Ex. 1017, Page 000114

Copy provided by USPTO from the IFW Image Database on 08/17/2012

– the potential spatial motion vector prediction candidate has essentially similar motion information than the spatial motion vector prediction candidate on the left side of the prediction unit.

9. The method according to any of the claims 1 to 8 further comprising including a temporal motion prediction candidate into the merge list.

10. The method according to any of the claims 1 to 9 comprising selecting one motion vector prediction candidate from the merge list to represent a motion vector prediction for the block of pixels.

11. A method comprising:

receiving an encoded block of pixels including a prediction unit;

determining a set of spatial motion vector prediction candidates for the encoded block of pixels; the spatial motion vector prediction candidates being provided with motion information;

selecting a first spatial motion vector prediction candidate from the set of spatial motion vector prediction candidates as a potential spatial motion vector prediction candidate to be included in a merge list for the prediction unit;

determining a subset of spatial motion vector predictions based on the location of the block associated with the first spatial motion vector prediction candidate;

comparing motion information of the first spatial motion vector prediction candidate with motion information of another spatial motion vector prediction candidate of the set of spatial motion vector prediction candidates;

if at least one of the comparisons indicates that the motion vector information of the spatial motion vector prediction candidates correspond with each other, excluding the first spatial motion vector prediction candidate from the merge list.

12. The method according to claim 11, the determining comprising including neighbouring blocks of the received encoded block of pixels in the set of spatial motion vector prediction candidates.

Amazon.com, Inc., Amazon.com Services LLC - Ex. 1017, Page 000115

Copy provided by USPTO

13. The method according to claim 11 or 12 comprising constructing the set of spatial motion vector predictions by using motion vectors of one or more decoded blocks in a same frame than the received encoded block of pixels.

14. The method according to any of the claims 11 to 13 comprising selecting spatial motion vector prediction candidates from the set of spatial motion vector prediction candidates as the potential spatial motion vector prediction candidate in a predetermined order.

15. The method according to any of the claims 11 to 14, comprising comparing motion information of the potential spatial motion vector prediction candidate with motion information of at most one other spatial motion vector prediction candidate of the set of spatial motion vector prediction candidates.

16. The method according to any of the claims 11 to 15 comprising examining whether the received encoded block of pixels is divided into a first prediction unit and a second prediction unit; and if so, excluding the potential spatial motion vector prediction candidate from the merge list if the prediction unit is the second prediction unit.

17. The method according to any of the claims 11 to 16, further comprising

determining a maximum number of spatial motion vector prediction candidates to be included in a merge list; and

limiting the number of spatial motion vector prediction candidates in the merge list smaller or equal to the maximum number.

18. The method according to any of the claims 11 to 17 comprising:

examining, if the number of spatial motion vector prediction candidates in the merge list smaller than the maximum number;

if so, examining whether a prediction unit to which the potential spatial motion vector prediction candidate belongs is available for motion prediction;

if so, performing at least one of the following:

Amazon.com, Inc., Amazon.com Services LLC - Ex. 1017, Page 000116

for the potential spatial motion vector prediction candidate on the left side of the prediction unit, excluding the potential spatial motion vector prediction candidate from the merge list if any of the following conditions are fulfilled:

- the received encoded block of pixels is vertically divided into a first prediction unit and a second prediction unit, and the prediction unit is the second prediction unit;
- the received encoded block of pixels is horizontally divided into a first prediction unit and a second prediction unit, and if the prediction unit is the second prediction unit, and the potential spatial motion vector prediction candidate has essentially similar motion information than the spatial motion vector prediction candidate above the prediction unit;

for the potential spatial motion vector prediction candidate above the prediction unit, excluding the potential spatial motion vector prediction candidate from the merge list if any of the following conditions are fulfilled:

- the received encoded block of pixels is horizontally divided into a first prediction unit and a second prediction unit, and the prediction unit is the second prediction unit;
- the potential spatial motion vector prediction candidate has essentially similar motion information than the spatial motion vector prediction candidate on the left side of the prediction unit;

for the potential spatial motion vector prediction candidate, which is on the right side of the potential spatial motion vector prediction candidate above the prediction unit, excluding the potential spatial motion vector prediction candidate from the merge list if the potential spatial motion vector prediction candidate has essentially similar motion information than the spatial motion vector prediction candidate above the prediction unit;

for the potential spatial motion vector prediction candidate, which is below the potential spatial motion vector prediction candidate on the left side of the prediction unit, excluding the potential spatial motion vector prediction candidate from the merge list if the potential spatial motion vector prediction candidate has essentially similar motion information than the spatial motion vector prediction candidate on the left side of the prediction unit;

Amazon.com, Inc., Amazon.com Services LLC - Ex. 1017, Page 000117
Copy provided by USPTO from the IFW Image Database on 09/17/2019

for the potential spatial motion vector prediction candidate cornerwise neighbouring the prediction unit, excluding the potential spatial motion vector prediction candidate from the merge list if any of the following conditions are fulfilled:

- all the other potential spatial motion vector prediction candidates have been included in the merge list;
- the potential spatial motion vector prediction candidate has essentially similar motion information than the spatial motion vector prediction candidate above the prediction unit;
- the potential spatial motion vector prediction candidate has essentially similar motion information than the spatial motion vector prediction candidate on the left side of the prediction unit.

19. The method according to any of the claims 11 to 18 further comprising including a temporal motion prediction candidate into the merge list.

20. The method according to any of the claims 11 to 19 comprising selecting one motion vector prediction candidate from the merge list to represent a motion vector prediction for the received encoded block of pixels.

21. An apparatus comprising a processor and a memory including computer program code, the memory and the computer program code configured to, with the processor, cause the apparatus to:

receiving a block of pixels including a prediction unit;

determining a set of spatial motion vector prediction candidates for the block of pixels; the spatial motion vector prediction candidates being provided with motion information;

selecting a first spatial motion vector prediction candidate from the set of spatial motion vector prediction candidates as a potential spatial motion vector prediction candidate to be included in a merge list for the prediction unit;

determining a subset of spatial motion vector predictions based on the location of the block associated with the first spatial motion vector prediction candidate;

Amazon.com, Inc., Amazon.com Services LLC - Ex. 1017, Page 000118

Copy provided by USPTO from the IFW Image Database on 08/17/2018

comparing motion information of the first spatial motion vector prediction candidate with motion information of the spatial motion vector prediction candidate in the determined subset of spatial motion vector prediction candidates;

if at least one the comparisons indicates that the motion vector information of the spatial motion vector prediction candidates correspond with each other, excluding the first spatial motion vector prediction candidate from the merge list.

22. The apparatus according to claim 21, comprising computer program code configured to, with the processor, cause the apparatus to include neighbouring blocks of the received block of pixels in the set of spatial motion vector prediction candidates.

23. The apparatus according to claim 21 or 22 comprising computer program code configured to, with the processor, cause the apparatus to construct the set of spatial motion vector predictions by using motion vectors of one or more encoded blocks in a same frame than the block of pixels.

24. The apparatus according to any of the claims 21 to 23 comprising computer program code configured to, with the processor, cause the apparatus to select spatial motion vector prediction candidates from the set of spatial motion vector prediction candidates as the potential spatial motion vector prediction candidate in a predetermined order.

25. The apparatus according to any of the claims 21 to 24, comprising computer program code configured to, with the processor, cause the apparatus to compare motion information of the potential spatial motion vector prediction candidate with motion information of at most one other spatial motion vector prediction candidate of the set of spatial motion vector prediction candidates.

26. The apparatus according to any of the claims 21 to 25 comprising computer program code configured to, with the processor, cause the apparatus to examine whether the received block of pixels is divided into a first prediction unit and a second prediction unit; and if

Amazon.com, Inc., Amazon.com Services LLC - Ex. 1017, Page 000119

Copy provided by USPTO from the IFW Image Database on 08/17/2012

so, excluding the potential spatial motion vector prediction candidate from the merge list if the prediction unit is the second prediction unit.

27. The apparatus according to any of the claims 21 to 26, further comprising computer program code configured to, with the processor, cause the apparatus to

determine a maximum number of spatial motion vector prediction candidates to be included in a merge list; and

limit the number of spatial motion vector prediction candidates in the merge list smaller or equal to the maximum number.

28. The apparatus according to any of the claims 21 to 27 comprising computer program code configured to, with the processor, cause the apparatus:

to examine, if the number of spatial motion vector prediction candidates in the merge list smaller than the maximum number;

if so, to examine whether a prediction unit to which the potential spatial motion vector prediction candidate belongs is available for motion prediction;

if so, to perform at least one of the following:

for the potential spatial motion vector prediction candidate on the left side of the prediction unit, to exclude the potential spatial motion vector prediction candidate from the merge list if any of the following conditions are fulfilled:

- the received block of pixels is vertically divided into a first prediction unit and a second prediction unit, and the prediction unit is the second prediction unit;
- the received block of pixels is horizontally divided into a first prediction unit and a second prediction unit, and if the prediction unit is the second prediction unit, and the potential spatial motion vector prediction candidate has essentially similar motion information than the spatial motion vector prediction candidate above the prediction unit;

Amazon.com, Inc., Amazon.com Services LLC - Ex. 1017, Page 000120

Copy provided by USPTO

for the potential spatial motion vector prediction candidate above the prediction unit, to exclude the potential spatial motion vector prediction candidate from the merge list if any of the following conditions are fulfilled:

- the received block of pixels is horizontally divided into a first prediction unit and a second prediction unit, and the prediction unit is the second prediction unit;
- the potential spatial motion vector prediction candidate has essentially similar motion information than the spatial motion vector prediction candidate on the left side of the prediction unit;

for the potential spatial motion vector prediction candidate, which is on the right side of the potential spatial motion vector prediction candidate above the prediction unit, to exclude the potential spatial motion vector prediction candidate from the merge list if the potential spatial motion vector prediction candidate has essentially similar motion information than the spatial motion vector prediction candidate above the prediction unit;

for the potential spatial motion vector prediction candidate, which is below the potential spatial motion vector prediction candidate on the left side of the prediction unit, to exclude the potential spatial motion vector prediction candidate from the merge list if the potential spatial motion vector prediction candidate has essentially similar motion information than the spatial motion vector prediction candidate on the left side of the prediction unit;

for the potential spatial motion vector prediction candidate cornerwise neighbouring the prediction unit, to exclude the potential spatial motion vector prediction candidate from the merge list if any of the following conditions are fulfilled:

- all the other potential spatial motion vector prediction candidates have been included in the merge list;
- the potential spatial motion vector prediction candidate has essentially similar motion information than the spatial motion vector prediction candidate above the prediction unit;
- the potential spatial motion vector prediction candidate has essentially similar motion information than the spatial motion vector prediction candidate on the left side of the prediction unit.

Amazon.com, Inc., Amazon.com Services LLC - Ex. 1017, Page 000121

29. The apparatus according to any of the claims 21 to 28 further comprising computer program code configured to, with the processor, cause the apparatus to include a temporal motion prediction candidate into the merge list.

30. The apparatus according to any of the claims 21 to 29 comprising computer program code configured to, with the processor, cause the apparatus to select one motion vector prediction candidate from the merge list to represent a motion vector prediction for the block of pixels.

31. An apparatus comprising a processor and a memory including computer program code, the memory and the computer program code configured to, with the processor, cause the apparatus to:

receive an encoded block of pixels including a prediction unit;

determine a set of spatial motion vector prediction candidates for the encoded block of pixels; the spatial motion vector prediction candidates being provided with motion information;

select a first spatial motion vector prediction candidate from the set of spatial motion vector prediction candidates as a potential spatial motion vector prediction candidate to be included in a merge list for the prediction unit;

determine a subset of spatial motion vector predictions based on the location of the block associated with the first spatial motion vector prediction candidate;

compare motion information of the first spatial motion vector prediction candidate with motion information of the spatial motion vector prediction candidate in the determined subset of spatial motion vector prediction candidates;

exclude the first spatial motion vector prediction candidate from the merge list, if at least one of the comparisons indicates that the motion vector information of the spatial motion vector prediction candidates correspond with each other

32. The apparatus according to claim 31, comprising computer program code configured to, with the processor, cause the apparatus to include neighbouring blocks of the received encoded block of pixels in the set of spatial motion vector prediction candidates.

Amazon.com, Inc., Amazon.com Services LLC - Ex. 1017, Page 000122

33. The apparatus according to claim 31 or 32 comprising computer program code configured to, with the processor, cause the apparatus to construct the set of spatial motion vector predictions by using motion vectors of one or more encoded blocks in a same frame than the received encoded block of pixels.

34. The apparatus according to any of the claims 31 to 33 comprising computer program code configured to, with the processor, cause the apparatus to select spatial motion vector prediction candidates from the set of spatial motion vector prediction candidates as the potential spatial motion vector prediction candidate in a predetermined order.

35. The apparatus according to any of the claims 31 to 34, comprising computer program code configured to, with the processor, cause the apparatus to compare motion information of the potential spatial motion vector prediction candidate with motion information of at most one other spatial motion vector prediction candidate of the set of spatial motion vector prediction candidates.

36. The apparatus according to any of the claims 31 to 35 comprising computer program code configured to, with the processor, cause the apparatus to examine whether the received encoded block of pixels is divided into a first prediction unit and a second prediction unit; and if so, excluding the potential spatial motion vector prediction candidate from the merge list if the prediction unit is the second prediction unit.

37. The apparatus according to any of the claims 31 to 36, further comprising computer program code configured to, with the processor, cause the apparatus to

determine a maximum number of spatial motion vector prediction candidates to be included in a merge list; and

limit the number of spatial motion vector prediction candidates in the merge list smaller or equal to the maximum number.

Amazon.com, Inc., Amazon.com Services LLC - Ex. 1017, Page 000123
Copy provided by USPTO

38. The apparatus according to any of the claims 31 to 37 comprising computer program code configured to, with the processor, cause the apparatus:

to examine, if the number of spatial motion vector prediction candidates in the merge list smaller than the maximum number;

if so, to examine whether a prediction unit to which the potential spatial motion vector prediction candidate belongs is available for motion prediction;

if so, to perform at least one of the following:

for the potential spatial motion vector prediction candidate on the left side of the prediction unit, to exclude the potential spatial motion vector prediction candidate from the merge list if any of the following conditions are fulfilled:

- the received encoded block of pixels is vertically divided into a first prediction unit and a second prediction unit, and the prediction unit is the second prediction unit;
- the received encoded block of pixels is horizontally divided into a first prediction unit and a second prediction unit, and if the prediction unit is the second prediction unit, and the potential spatial motion vector prediction candidate has essentially similar motion information than the spatial motion vector prediction candidate above the prediction unit;

for the potential spatial motion vector prediction candidate above the prediction unit, to exclude the potential spatial motion vector prediction candidate from the merge list if any of the following conditions are fulfilled:

- the received encoded block of pixels is horizontally divided into a first prediction unit and a second prediction unit, and the prediction unit is the second prediction unit;
- the potential spatial motion vector prediction candidate has essentially similar motion information than the spatial motion vector prediction candidate on the left side of the prediction unit;

for the potential spatial motion vector prediction candidate, which is on the right side of the potential spatial motion vector prediction candidate above the prediction unit, to exclude the potential spatial motion vector prediction candidate from the merge list if the potential spatial

Amazon.com, Inc., Amazon.com Services LLC - Ex. 1017, Page 000124

motion vector prediction candidate has essentially similar motion information than the spatial motion vector prediction candidate above the prediction unit;

for the potential spatial motion vector prediction candidate, which is below the potential spatial motion vector prediction candidate on the left side of the prediction unit, to exclude the potential spatial motion vector prediction candidate from the merge list if the potential spatial motion vector prediction candidate has essentially similar motion information than the spatial motion vector prediction candidate on the left side of the prediction unit;

for the potential spatial motion vector prediction candidate cornerwise neighbouring the prediction unit, to exclude the potential spatial motion vector prediction candidate from the merge list if any of the following conditions are fulfilled:

- all the other potential spatial motion vector prediction candidates have been included in the merge list;
- the potential spatial motion vector prediction candidate has essentially similar motion information than the spatial motion vector prediction candidate above the prediction unit;
- the potential spatial motion vector prediction candidate has essentially similar motion information than the spatial motion vector prediction candidate on the left side of the prediction unit.

39. The apparatus according to any of the claims 31 to 38 further comprising computer program code configured to, with the processor, cause the apparatus to include a temporal motion prediction candidate into the merge list.

40. The apparatus according to any of the claims 31 to 39 comprising computer program code configured to, with the processor, cause the apparatus to select one motion vector prediction candidate from the merge list to represent a motion vector prediction for the received encoded block of pixels.

Amazon.com, Inc., Amazon.com Services LLC - Ex. 1017, Page 000125

41. A storage medium having stored thereon a computer program code a computer executable program code for use by an encoder, said program codes comprise instructions for use by an encoder, said program code comprises instructions for:

receiving a block of pixels including a prediction unit;

determining a set of spatial motion vector prediction candidates for the block of pixels; the spatial motion vector prediction candidates being provided with motion information;

selecting a first spatial motion vector prediction candidate from the set of spatial motion vector prediction candidates as a potential spatial motion vector prediction candidate to be included in a merge list for the prediction unit;

determining a subset of spatial motion vector predictions based on the location of the block associated with the first spatial motion vector prediction candidate;

comparing motion information of the first spatial motion vector prediction candidate with motion information of the spatial motion vector prediction candidate in the determined subset of spatial motion vector prediction candidates;

if at least one of the comparisons indicates that the motion vector information of the spatial motion vector prediction candidates correspond with each other, excluding the first spatial motion vector prediction candidate from the merge list.

42. A storage medium having stored thereon a computer program code a computer executable program code for use by an encoder, said program codes comprise instructions for use by an encoder, said program code comprises instructions for:

receiving an encoded block of pixels including a prediction unit;

determining a set of spatial motion vector prediction candidates for the encoded block of pixels; the spatial motion vector prediction candidates being provided with motion information;

selecting a first spatial motion vector prediction candidate from the set of spatial motion vector prediction candidates as a potential spatial motion vector prediction candidate to be included in a merge list for the prediction unit;

determining a subset of spatial motion vector predictions based on the location of the block associated with the first spatial motion vector prediction candidate;

Amazon.com, Inc., Amazon.com Services LLC - Ex. 1017, Page 000126

comparing motion information of the first spatial motion vector prediction candidate with motion information of the spatial motion vector prediction candidate in the determined subset of spatial motion vector prediction candidates;

if at least one of the comparisons indicates that the motion vector information of the spatial motion vector prediction candidates correspond with each other, excluding the first spatial motion vector prediction candidate from the merge list.

43. An apparatus comprising:

means for receiving a block of pixels including a prediction unit;

means for determining a set of spatial motion vector prediction candidates for the block of pixels; the spatial motion vector prediction candidates being provided with motion information;

means for selecting a first spatial motion vector prediction candidate from the set of spatial motion vector prediction candidates as a potential spatial motion vector prediction candidate to be included in a merge list for the prediction unit;

means for determining a subset of spatial motion vector predictions based on the location of the block associated with the first spatial motion vector prediction candidate;

means for comparing motion information of the first spatial motion vector prediction candidate with motion information of the spatial motion vector prediction candidate in the determined subset of spatial motion vector prediction candidates;

means for excluding the first spatial motion vector prediction candidate from the merge list, if at least one of the comparisons indicates that the motion vector information of the spatial motion vector prediction candidates correspond with each other.

44. An apparatus comprising:

means for receiving an encoded block of pixels including a prediction unit;

means for determining a set of spatial motion vector prediction candidates for the encoded block of pixels; the spatial motion vector prediction candidates being provided with motion information;

Amazon.com, Inc., Amazon.com Services LLC - Ex. 1017, Page 000127

means for selecting a first spatial motion vector prediction candidate from the set of spatial motion vector prediction candidates as a potential spatial motion vector prediction candidate to be included in a merge list for the prediction unit;

means for determining a subset of spatial motion vector predictions based on the location of the block associated with the first spatial motion vector prediction candidate;

means for comparing motion information of the first spatial motion vector prediction candidate with motion information of the spatial motion vector prediction candidate in the determined subset of spatial motion vector prediction candidates;

means for excluding the first spatial motion vector prediction candidate from the merge list, if at least one of the comparisons indicates that the motion vector information of the spatial motion vector prediction candidates correspond with each other.

Amazon.com, Inc., Amazon.com Services LLC - Ex. 1017, Page 000128

ABSTRACT

The invention relates to a method comprising receiving a block of pixels including a prediction unit. In the method a set of spatial motion vector prediction candidates is determined for the block of pixels, which includes a prediction unit. The spatial motion vector prediction candidates are provided with motion information. A first spatial motion vector prediction candidate is selected from the set of spatial motion vector prediction candidates as a potential spatial motion vector prediction candidate to be included in a merge list for the prediction unit. A subset of spatial motion vector predictions is determined based on the location of the block associated with the first spatial motion vector prediction candidate. Motion information of the first spatial motion vector prediction candidate is compared with motion information of the spatial motion vector prediction candidate in the determined subset of spatial motion vector prediction candidates. If at least one of the comparison indicates that the motion vector information of the spatial motion vector prediction candidates correspond with each other, the potential spatial motion vector prediction candidate is excluded from the merge list. The number of spatial motion vector prediction candidates in the merge list may be limited to be smaller than the number of spatial motion vector prediction candidates in the set of spatial motion vector prediction candidates.

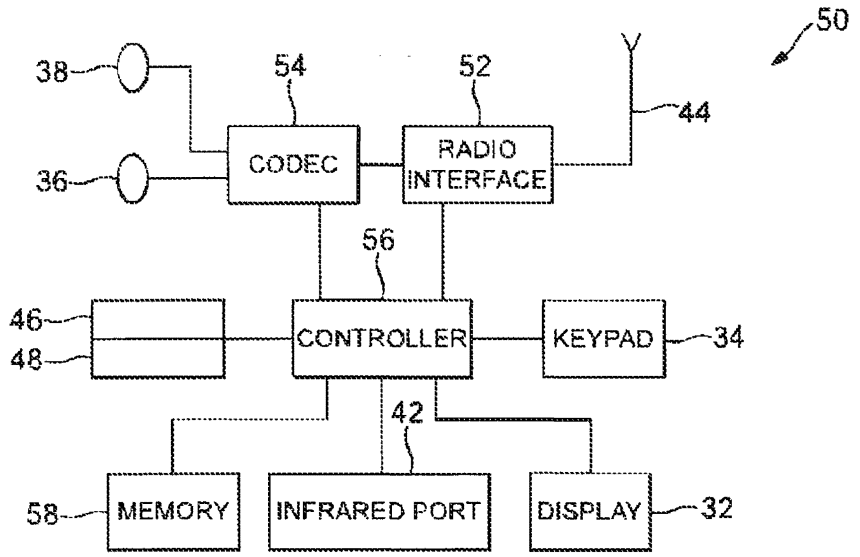
50
38
54
52
44
36
CODEC
RADIO INTERFACE
56
46
48
CONTROLLER
KEYPAD
34
42
58
MEMORY
INFRARED PORT
DISPLAY
32

FIG.1

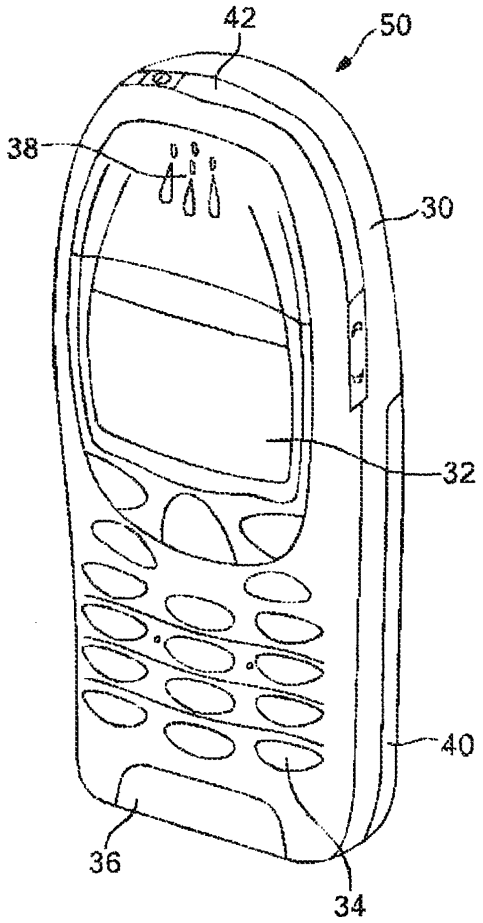
42
50
38
30
32
40
36
34

FIG. 2

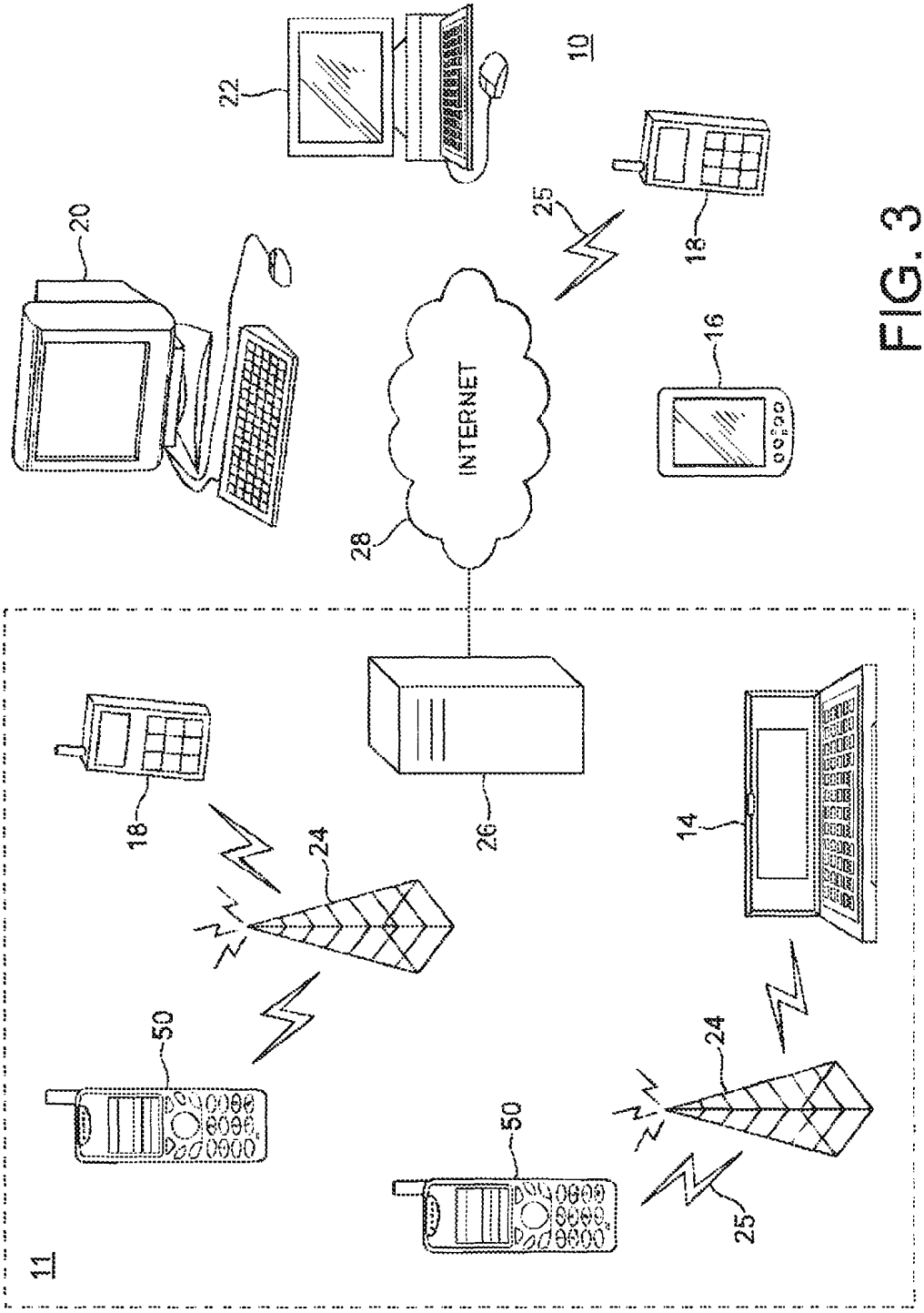

FIG. 3

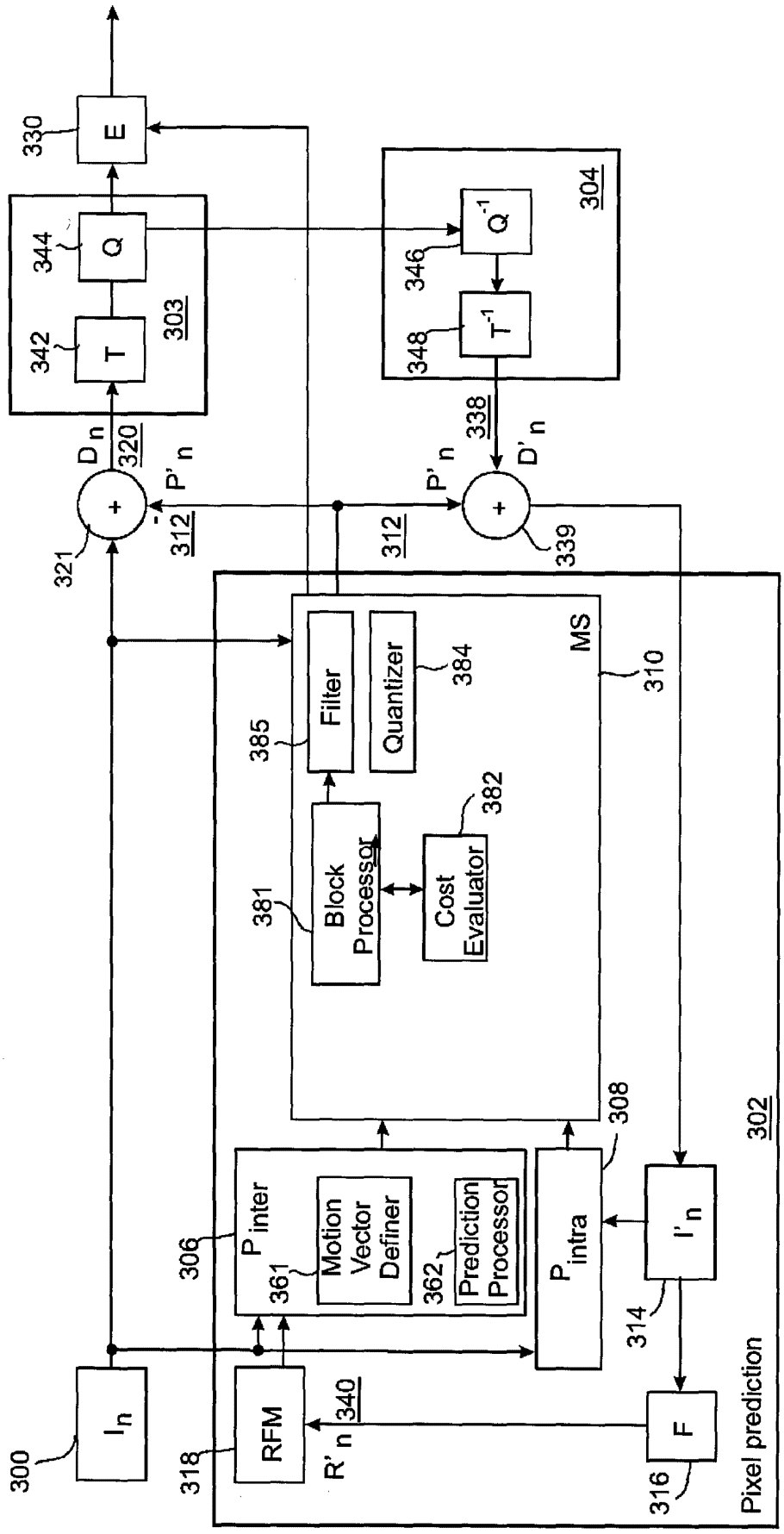
300
I_n
318
RFM
R'_n
340
306
P_{inter}
361
Motion Vector Definer
362
Prediction Processor
P_{intra}
308
I'_n
314
F
316
Pixel prediction
302
381
Block Processor
382
Cost Evaluator
385
Filter
Quantizer
384
MS
310
321
D_n
320
P'_n
312
342
T
344
Q
303
330
E
346
Q^{-1}
348
T^{-1}
304
338
D'_n
P'_n
312
339

Fig. 4a

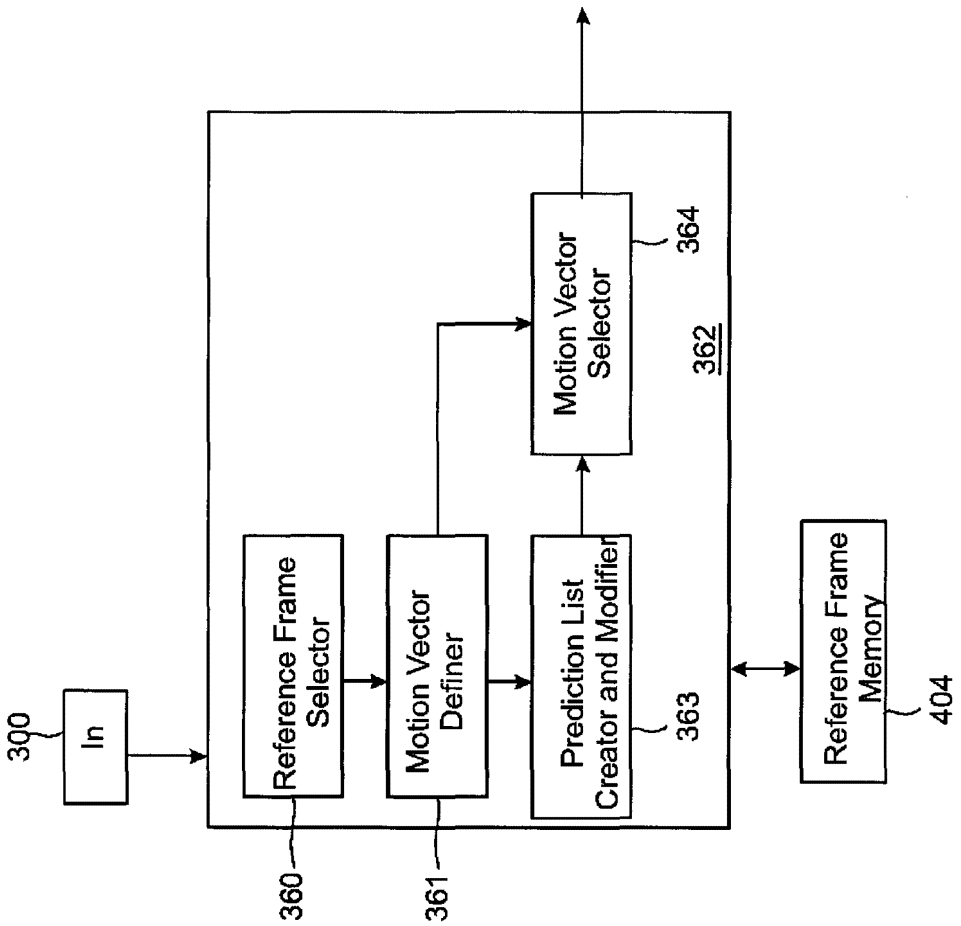
300
In
Reference Frame Selector
360
Motion Vector Definer
361
Prediction List Creator and Modifier
363
Motion Vector Selector
364
362
Reference Frame Memory
404

Fig. 4b

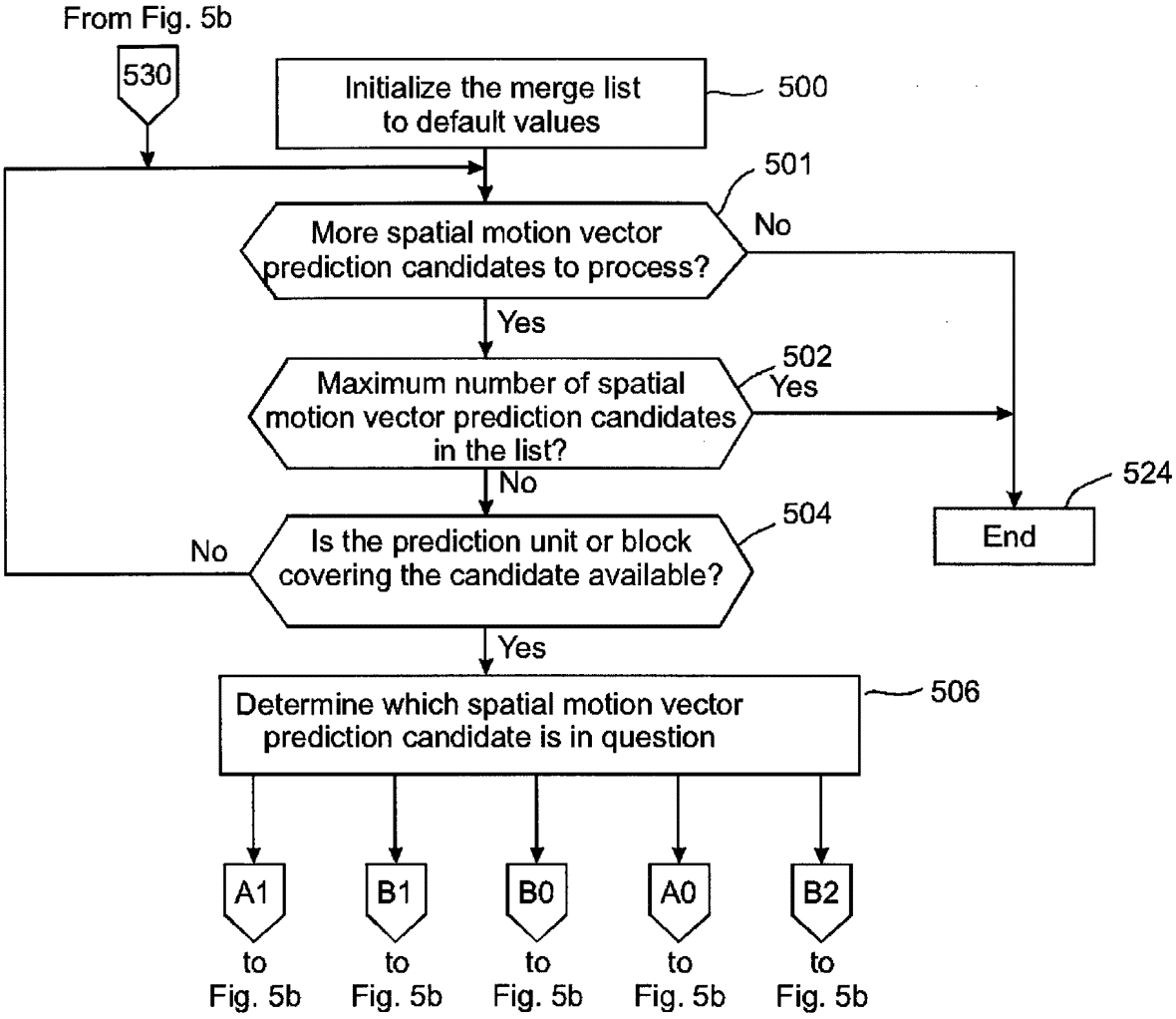
From Fig. 5b
530
Initialize the merge list to default values
500
501
More spatial motion vector prediction candidates to process?
No
Yes
502
Maximum number of spatial motion vector prediction candidates in the list?
Yes
No
524
End
504
Is the prediction unit or block covering the candidate available?
No
Yes
506
Determine which spatial motion vector prediction candidate is in question
A1
B1
B0
A0
B2
to Fig. 5b
to Fig. 5b
to Fig. 5b
to Fig. 5b
to Fig. 5b

Fig. 5a

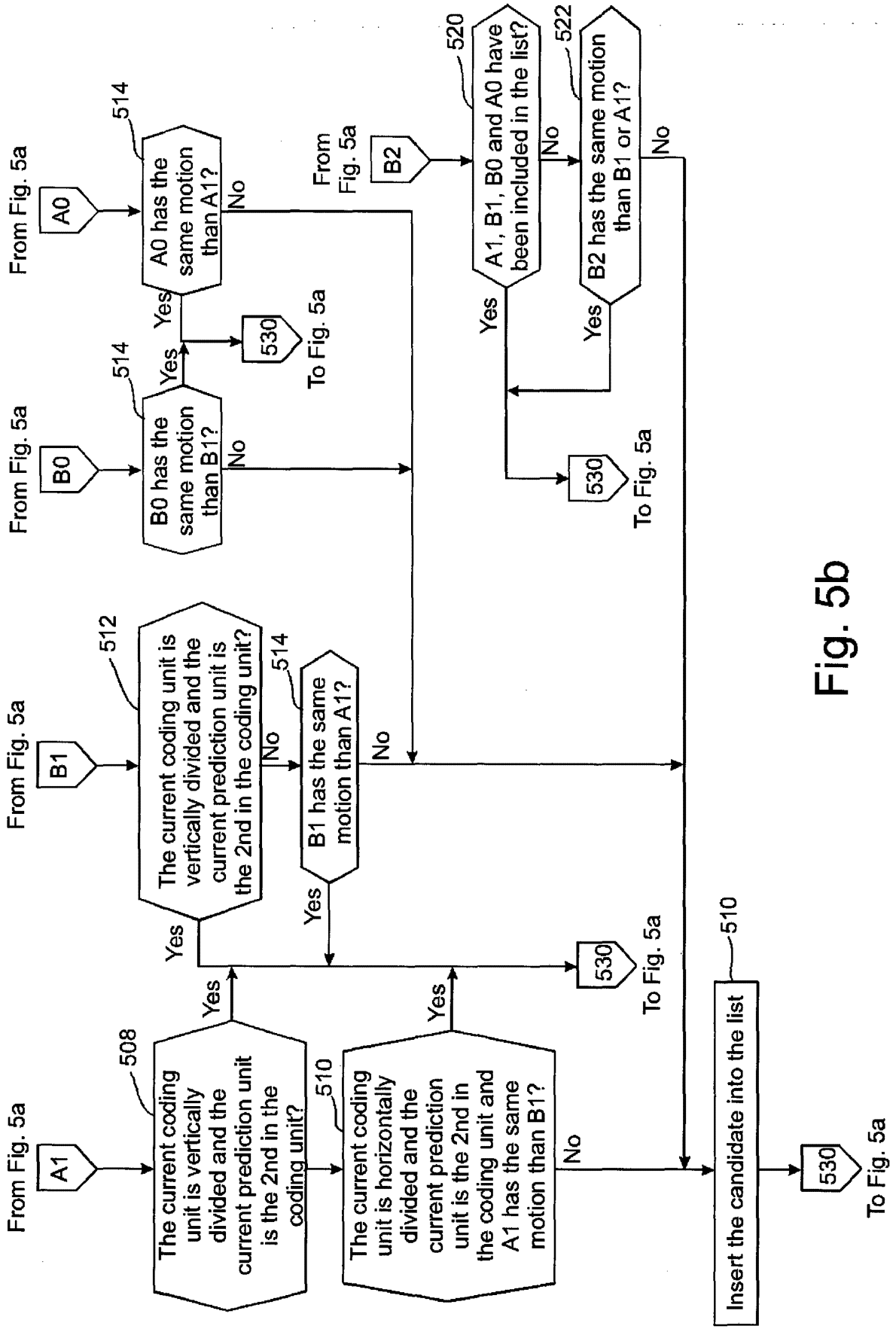
From Fig. 5a
A1
508
The current coding unit is vertically divided and the current prediction unit is the 2nd in the coding unit?
Yes
510
The current coding unit is horizontally divided and the current prediction unit is the 2nd in the coding unit and A1 has the same motion than B1?
Yes
No
From Fig. 5a
B1
512
The current coding unit is vertically divided and the current prediction unit is the 2nd in the coding unit?
Yes
No
514
B1 has the same motion than A1?
Yes
No
530
To Fig. 5a
From Fig. 5a
B0
514
B0 has the same motion than B1?
Yes
No
530
To Fig. 5a
From Fig. 5a
A0
514
A0 has the same motion than A1?
Yes
No
530
To Fig. 5a
From Fig. 5a
B2
520
A1, B1, B0 and A0 have been included in the list?
Yes
No
522
B2 has the same motion than B1 or A1?
Yes
No
530
To Fig. 5a
510
Insert the candidate into the list
530
To Fig. 5a

Fig. 5b

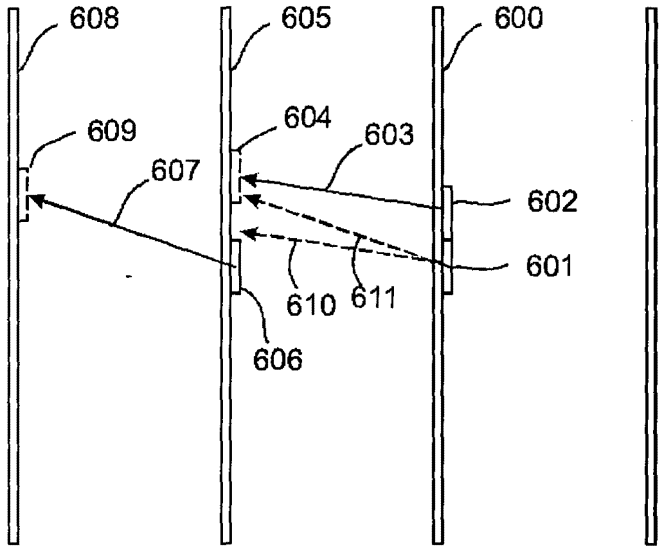
608
605
600
609
604
603
607
602
601
610
611
606

Fig. 6a

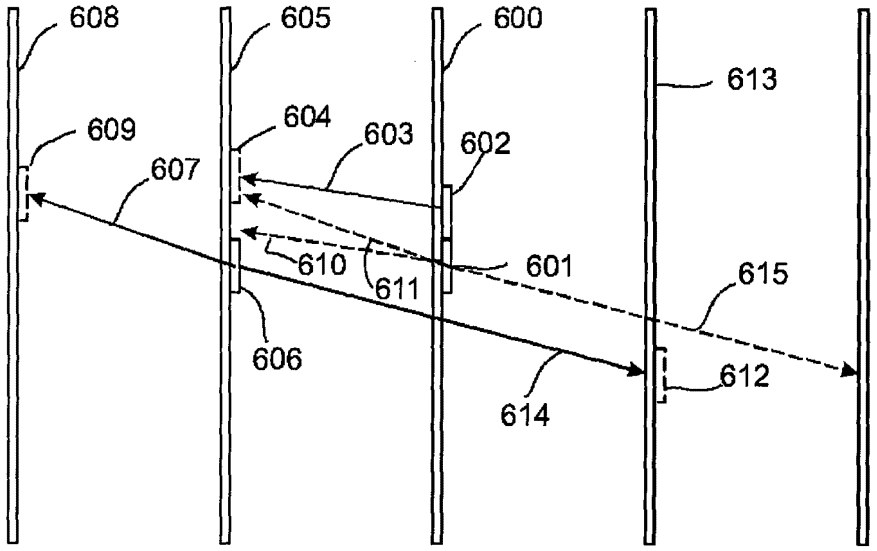
608
605
600
613
609
604
603
602
607
610
601
611
615
606
612
614

Fig. 6b

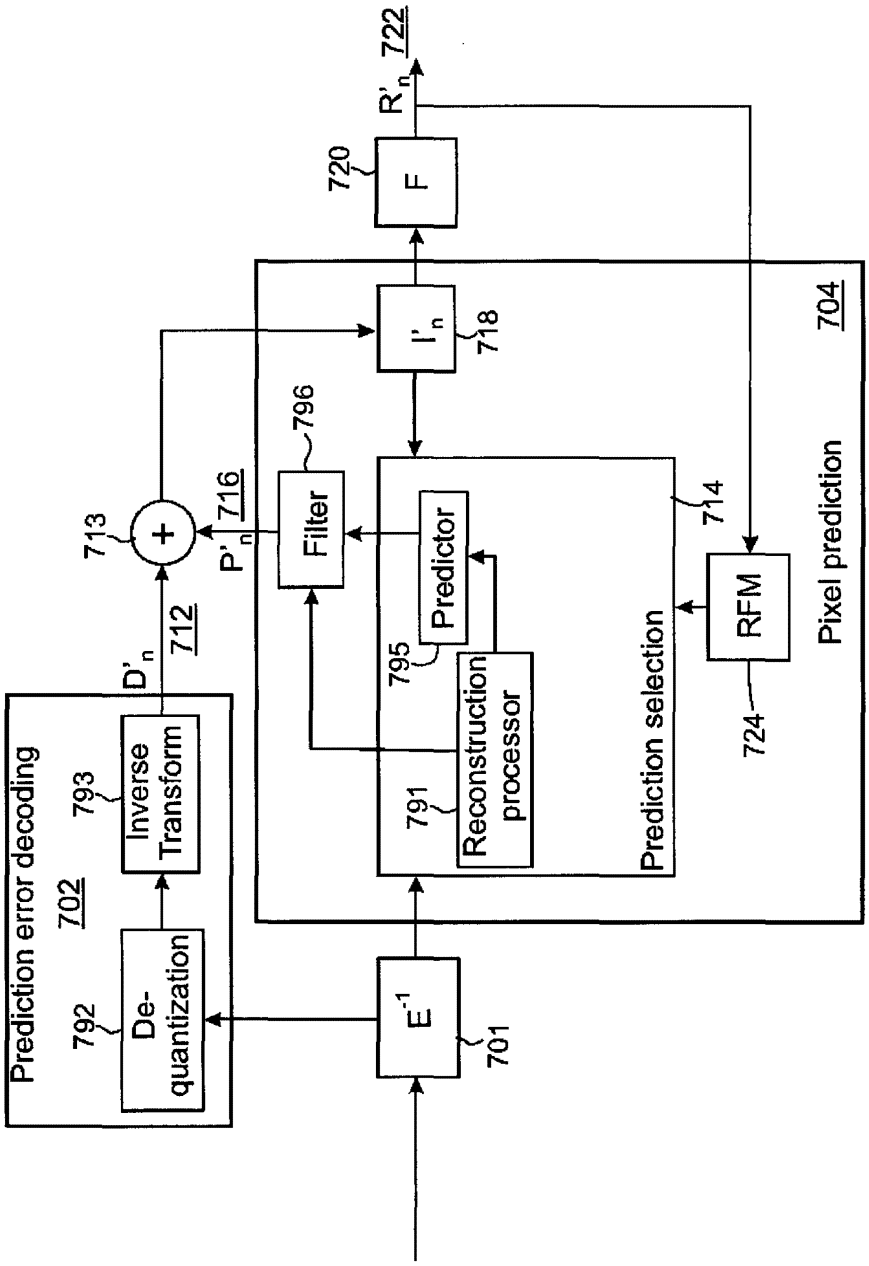
Prediction error decoding
702
792
De-quantization
793
Inverse Transform
D'n
712
713
+
P'n
716
Filter
796
E-1
701
791
Reconstruction processor
795
Predictor
I'n
718
Prediction selection
714
RFM
724
Pixel prediction
704
F
720
R'n
722

Fig. 7

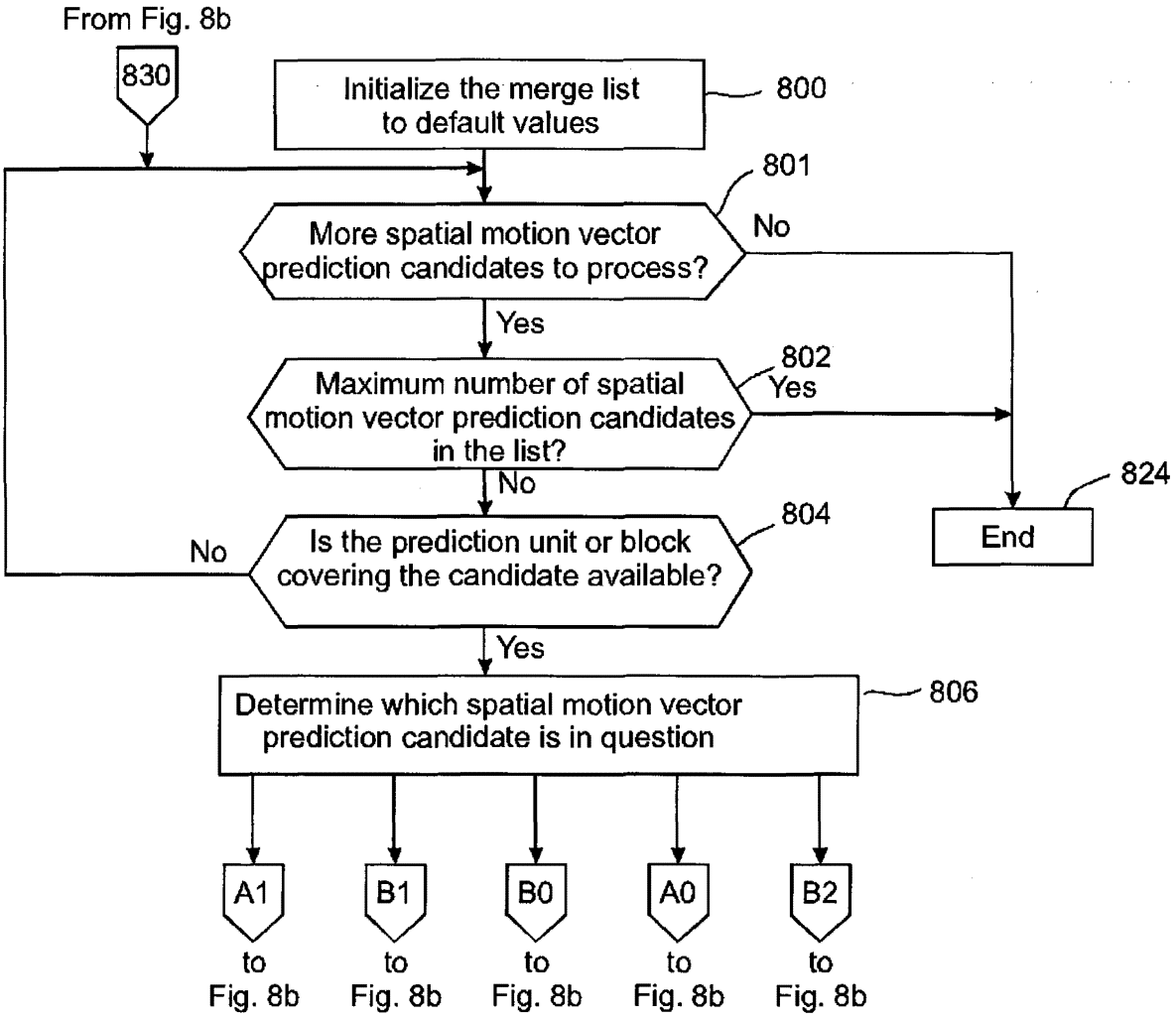
From Fig. 8b
830
Initialize the merge list to default values
800
801
More spatial motion vector prediction candidates to process?
No
Yes
802
Maximum number of spatial motion vector prediction candidates in the list?
Yes
No
824
End
804
Is the prediction unit or block covering the candidate available?
No
Yes
806
Determine which spatial motion vector prediction candidate is in question
A1
B1
B0
A0
B2
to Fig. 8b
to Fig. 8b
to Fig. 8b
to Fig. 8b
to Fig. 8b

Fig. 8a

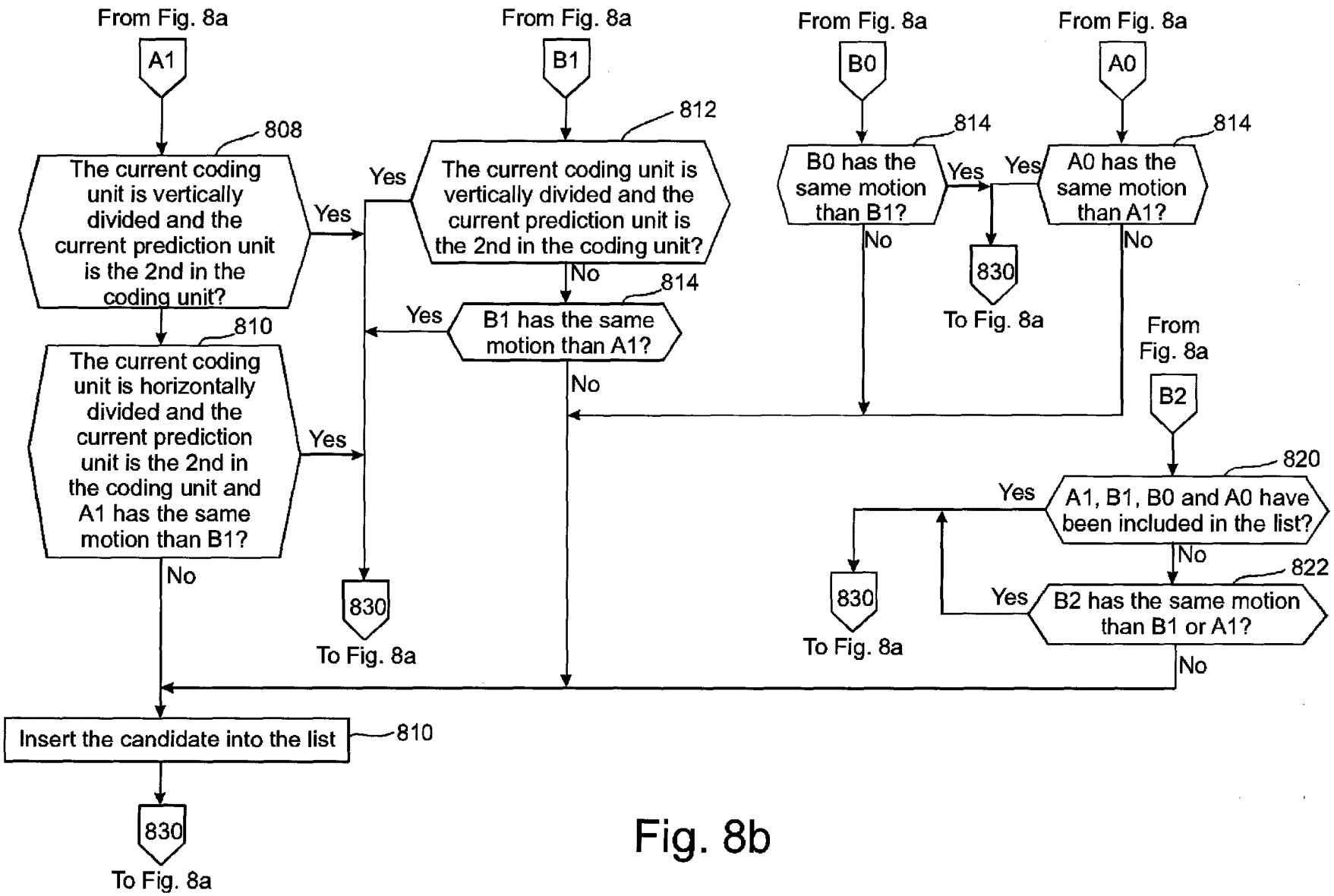

Fig. 8b

Amazon.com, Inc., Amazon.com Services LLC - Ex. 1017, Page 000139

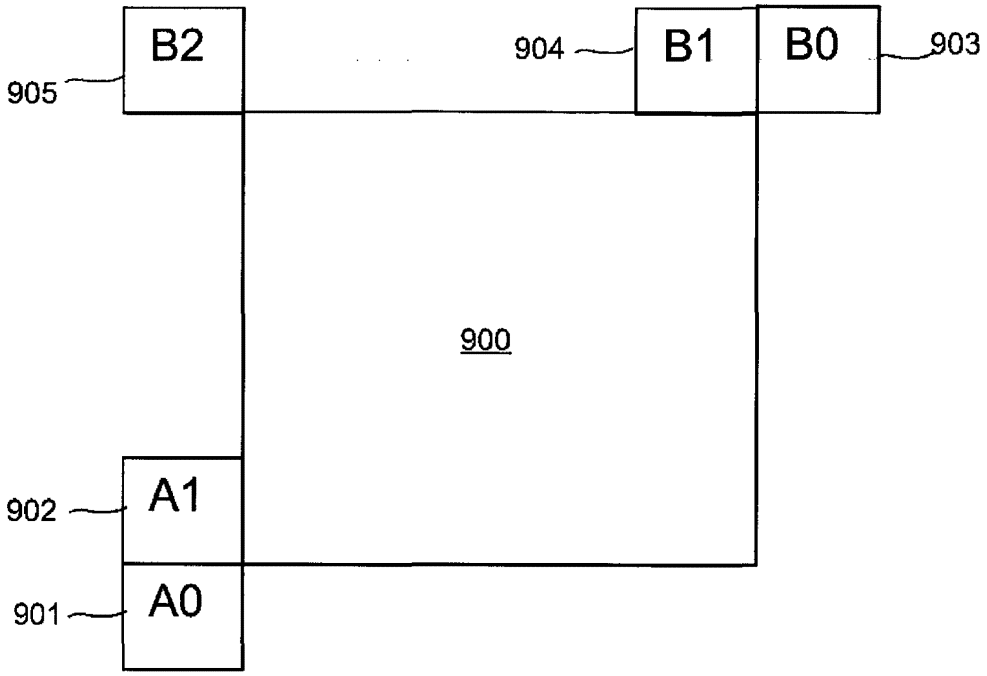

Fig. 9

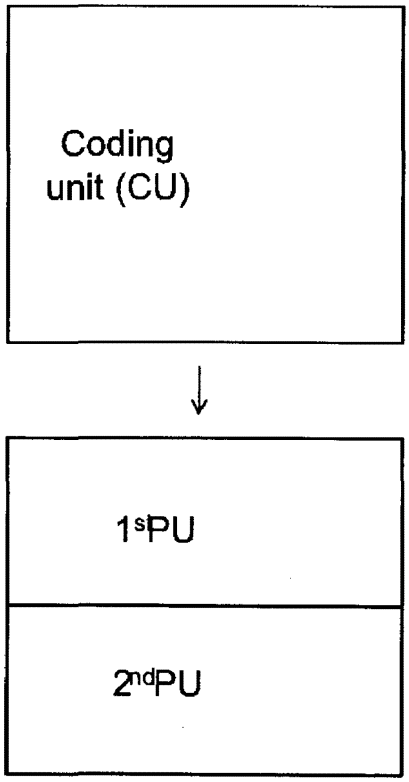

Fig. 10a

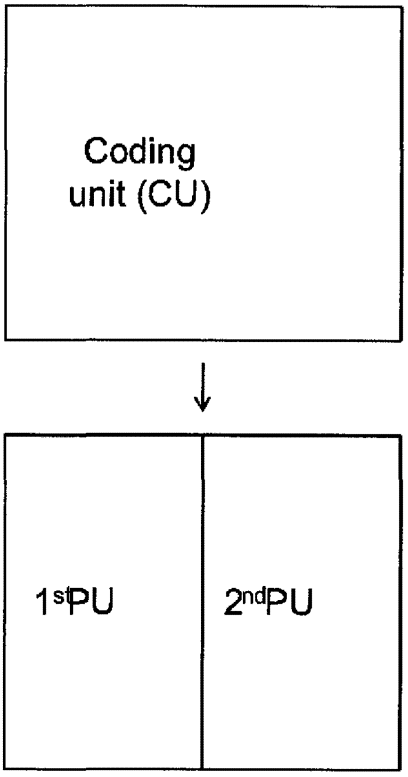

Fig. 10b

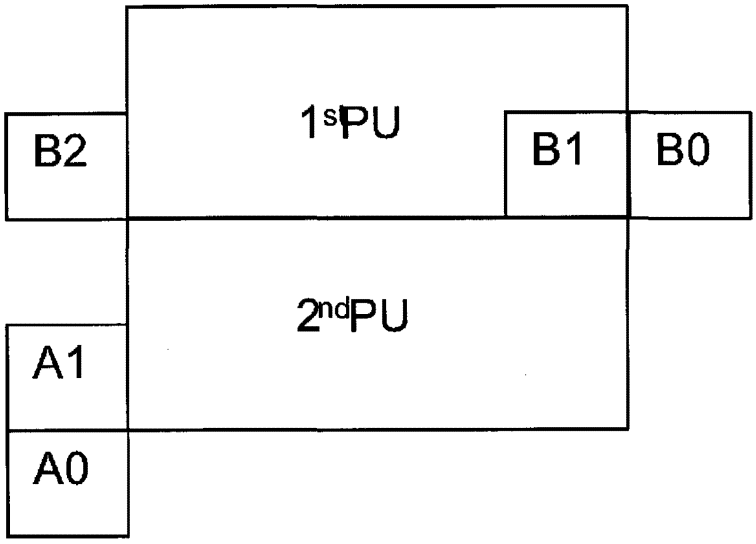

Fig. 11a

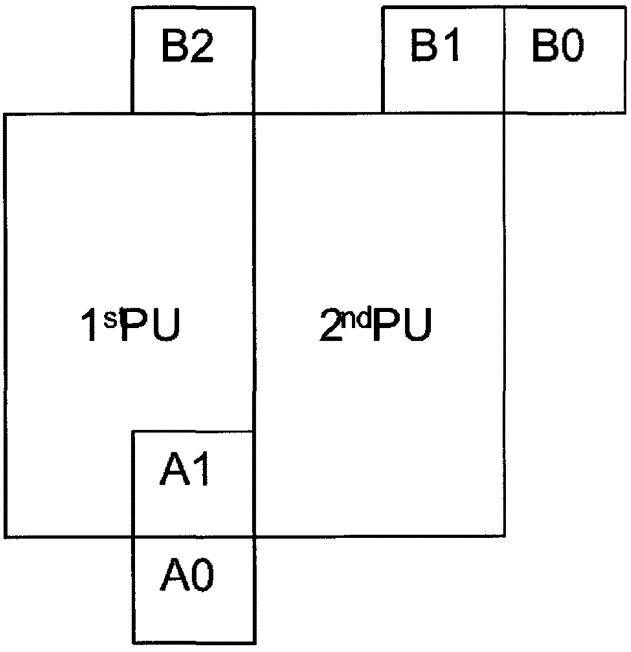

Fig. 11b

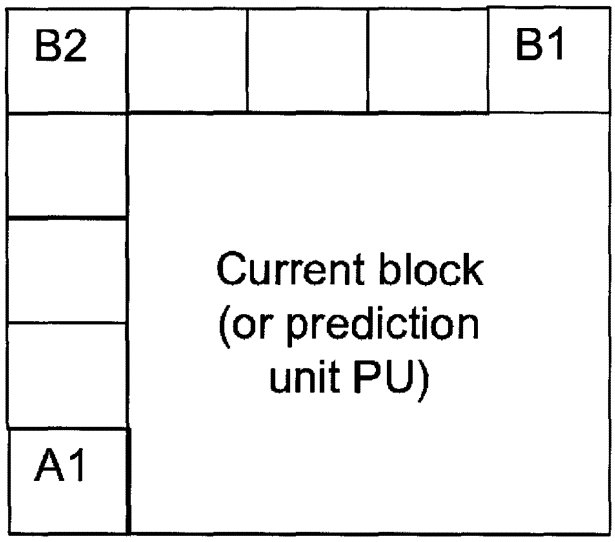

Fig. 12

Under the Paperwork Reduction Act of 1995, no persons are required to respond to a collection of information unless it contains a valid OMB control number.

Application Data Sheet 37 CFR 1.76	Attorney Docket Number	NC77198US-PSP
	Application Number	
Title of Invention	Method for Coding and an Apparatus	

The application data sheet is part of the provisional or nonprovisional application for which it is being submitted. The following form contains the bibliographic data arranged in a format specified by the United States Patent and Trademark Office as outlined in 37 CFR 1.76.
This document may be completed electronically and submitted to the Office in electronic format using the Electronic Filing System (EFS) or the document may be printed and included in a paper filed application.

Secrecy Order 37 CFR 5.2

☐ Portions or all of the application associated with this Application Data Sheet may fall under a Secrecy Order pursuant to 37 CFR 5.2 (Paper filers only. Applications that fall under Secrecy Order may not be filed electronically.)

Applicant Information:

Applicant 1 Remove

Applicant Authority ◉ Inventor ◯ Legal Representative under 35 U.S.C. 117 ◯ Party of Interest under 35 U.S.C. 118

Prefix	Given Name	Middle Name	Family Name	Suffix
	Mehmet	Oguz	BICI	

Residence Information (Select One) ◯ US Residency ◉ Non US Residency ◯ Active US Military Service

City	Tampere	**Country Of Residence**[i]	TR
Citizenship under 37 CFR 1.41(b)[i]	FI		

Mailing Address of Applicant:

Address 1	Tammelan puistokatu 1-3 D 46		
Address 2			
City	Tampere	**State/Province**	
Postal Code	33500	**Country**[i]	FI

Applicant 2 Remove

Applicant Authority ◉ Inventor ◯ Legal Representative under 35 U.S.C. 117 ◯ Party of Interest under 35 U.S.C. 118

Prefix	Given Name	Middle Name	Family Name	Suffix
	Jani		LAINEMA	

Residence Information (Select One) ◯ US Residency ◉ Non US Residency ◯ Active US Military Service

City	Tampere	**Country Of Residence**[i]	FI
Citizenship under 37 CFR 1.41(b)[i]	FI		

Mailing Address of Applicant:

Address 1	Kisakentankatu 12 B 6		
Address 2			
City	Tampere	**State/Province**	
Postal Code	33230	**Country**[i]	FI

Applicant 3 Remove

Applicant Authority ◉ Inventor ◯ Legal Representative under 35 U.S.C. 117 ◯ Party of Interest under 35 U.S.C. 118

Prefix	Given Name	Middle Name	Family Name	Suffix
	Kemal		UGUR	

Residence Information (Select One) ◯ US Residency ◉ Non US Residency ◯ Active US Military Service

City	Tampere	**Country Of Residence**[i]	FI

Amazon.com, Inc., Amazon.com Services LLC - Ex. 1017, Page 000143
Copy provided by USPTO from the IFW Image Database on 08/17/2012

PTO/SB/14 (07-07)
Approved for use through 06/30/2010. OMB 0651-0032
U.S. Patent and Trademark Office; U.S. DEPARTMENT OF COMMERCE
Under the Paperwork Reduction Act of 1995, no persons are required to respond to a collection of information unless it contains a valid OMB control number.

Application Data Sheet 37 CFR 1.76	Attorney Docket Number	NC77198US-PSP
	Application Number	
Title of Invention	Method for Coding and an Apparatus	

Citizenship under 37 CFR 1.41(b) [i]	TR		
Mailing Address of Applicant:			
Address 1	Kuninkaankatu 5 J 221		
Address 2			
City	Tampere	**State/Province**	
Postal Code	33210	**Country**[i]	FI

All Inventors Must Be Listed - Additional Inventor Information blocks may be generated within this form by selecting the **Add** button. Add

Correspondence Information:

Enter either Customer Number or complete the Correspondence Information section below. For further information see 37 CFR 1.33(a).

☐ **An Address is being provided for the correspondence Information of this application.**

Customer Number	73658		
Email Address	ipr.inhouse@nokia.com	Add Email	Remove Email

Application Information:

Title of the Invention	Method for Coding and an Apparatus		
Attorney Docket Number	NC77198US-PSP	**Small Entity Status Claimed**	☐
Application Type	Provisional		
Subject Matter	Utility		
Suggested Class (if any)		**Sub Class (if any)**	
Suggested Technology Center (if any)			
Total Number of Drawing Sheets (if any)	13	**Suggested Figure for Publication (if any)**	

Publication Information:

☐ Request Early Publication (Fee required at time of Request 37 CFR 1.219)

☐ **Request Not to Publish.** I hereby request that the attached application not be published under 35 U.S. C. 122(b) and certify that the invention disclosed in the attached application **has not and will not** be the subject of an application filed in another country, or under a multilateral international agreement, that requires publication at eighteen months after filing.

Representative Information:

Representative information should be provided for all practitioners having a power of attorney in the application. Providing this information in the Application Data Sheet does not constitute a power of attorney in the application (see 37 CFR 1.32).
Enter either Customer Number or complete the Representative Name section below. If both sections are completed the Customer Number will be used for the Representative Information during processing.

Please Select One:	◉ Customer Number	○ US Patent Practitioner	○ Limited Recognition (37 CFR 11.9)

Amazon.com, Inc., Amazon.com Services LLC - Ex. 1017, Page 000144

Under the Paperwork Reduction Act of 1995, no persons are required to respond to a collection of information unless it contains a valid OMB control number.

Application Data Sheet 37 CFR 1.76	Attorney Docket Number	NC77198US-PSP
	Application Number	

Title of Invention	Method for Coding and an Apparatus

Customer Number	73658

Domestic Benefit/National Stage Information:

This section allows for the applicant to either claim benefit under 35 U.S.C. 119(e), 120, 121, or 365(c) or indicate National Stage entry from a PCT application. Providing this information in the application data sheet constitutes the specific reference required by 35 U.S.C. 119(e) or 120, and 37 CFR 1.78(a)(2) or CFR 1.78(a)(4), and need not otherwise be made part of the specification.

Prior Application Status			Remove
Application Number	Continuity Type	Prior Application Number	Filing Date (YYYY-MM-DD)

Additional Domestic Benefit/National Stage Data may be generated within this form by selecting the **Add** button. Add

Foreign Priority Information:

This section allows for the applicant to claim benefit of foreign priority and to identify any prior foreign application for which priority is not claimed. Providing this information in the application data sheet constitutes the claim for priority as required by 35 U.S.C. 119(b) and 37 CFR 1.55(a).

Remove

Application Number	Country [i]	Parent Filing Date (YYYY-MM-DD)	Priority Claimed
			◉ Yes ◯ No

Additional Foreign Priority Data may be generated within this form by selecting the **Add** button. Add

Assignee Information:

Providing this information in the application data sheet does not substitute for compliance with any requirement of part 3 of Title 37 of the CFR to have an assignment recorded in the Office.

Assignee 1 Remove

If the Assignee is an Organization check here. ☒

Organization Name	Nokia Corporation		
Mailing Address Information:			
Address 1	Keilalahdentie 4		
Address 2			
City	Espoo	**State/Province**	
Country [i]	FI	Postal Code	02150
Phone Number		Fax Number	
Email Address			

Additional Assignee Data may be generated within this form by selecting the **Add** button. Add

Signature:

A signature of the applicant or representative is required in accordance with 37 CFR 1.33 and 10.18. Please see 37 CFR 1.4(d) for the form of the signature.

Copy provided by USPTO from the IFW Image Database on 08/17/2012

PTO/SB/14 (07-07)
Approved for use through 06/30/2010. OMB 0651-0032
U.S. Patent and Trademark Office; U.S. DEPARTMENT OF COMMERCE
Under the Paperwork Reduction Act of 1995, no persons are required to respond to a collection of information unless it contains a valid OMB control number.

Application Data Sheet 37 CFR 1.76	Attorney Docket Number	NC77198US-PSP
	Application Number	
Title of Invention	Method for Coding and an Apparatus	

Signature	/Ragip Kurceren/			Date (YYYY-MM-DD)	2011-11-04
First Name	Ragip	Last Name	Kurceren	Registration Number	60158

This collection of information is required by 37 CFR 1.76. The information is required to obtain or retain a benefit by the public which is to file (and by the USPTO to process) an application. Confidentiality is governed by 35 U.S.C. 122 and 37 CFR 1.14. This collection is estimated to take 23 minutes to complete, including gathering, preparing, and submitting the completed application data sheet form to the USPTO. Time will vary depending upon the individual case. Any comments on the amount of time you require to complete this form and/or suggestions for reducing this burden, should be sent to the Chief Information Officer, U.S. Patent and Trademark Office, U.S. Department of Commerce, P.O. Box 1450, Alexandria, VA 22313-1450. DO NOT SEND FEES OR COMPLETED FORMS TO THIS ADDRESS. **SEND TO: Commissioner for Patents, P.O. Box 1450, Alexandria, VA 22313-1450.**

Amazon.com, Inc., Amazon.com Services LLC - Ex. 1017, Page 000146
Copy provided by USPTO from the IFW Image Database on 08/17/2012

Privacy Act Statement

The Privacy Act of 1974 (P.L. 93-579) requires that you be given certain information in connection with your submission of the attached form related to a patent application or patent. Accordingly, pursuant to the requirements of the Act, please be advised that: (1) the general authority for the collection of this information is 35 U.S.C. 2(b)(2); (2) furnishing of the information solicited is voluntary; and (3) the principal purpose for which the information is used by the U.S. Patent and Trademark Office is to process and/or examine your submission related to a patent application or patent. If you do not furnish the requested information, the U.S. Patent and Trademark Office may not be able to process and/or examine your submission, which may result in termination of proceedings or abandonment of the application or expiration of the patent.

The information provided by you in this form will be subject to the following routine uses:

1. The information on this form will be treated confidentially to the extent allowed under the Freedom of Information Act (5 U.S.C. 552) and the Privacy Act (5 U.S.C. 552a). Records from this system of records may be disclosed to the Department of Justice to determine whether the Freedom of Information Act requires disclosure of these records.

2. A record from this system of records may be disclosed, as a routine use, in the course of presenting evidence to a court, magistrate, or administrative tribunal, including disclosures to opposing counsel in the course of settlement negotiations.

3. A record in this system of records may be disclosed, as a routine use, to a Member of Congress submitting a request involving an individual, to whom the record pertains, when the individual has requested assistance from the Member with respect to the subject matter of the record.

4. A record in this system of records may be disclosed, as a routine use, to a contractor of the Agency having need for the information in order to perform a contract. Recipients of information shall be required to comply with the requirements of the Privacy Act of 1974, as amended, pursuant to 5 U.S.C. 552a(m).

5. A record related to an International Application filed under the Patent Cooperation Treaty in this system of records may be disclosed, as a routine use, to the International Bureau of the World Intellectual Property Organization, pursuant to the Patent Cooperation Treaty.

6. A record in this system of records may be disclosed, as a routine use, to another federal agency for purposes of National Security review (35 U.S.C. 181) and for review pursuant to the Atomic Energy Act (42 U.S.C. 218(c)).

7. A record from this system of records may be disclosed, as a routine use, to the Administrator, General Services, or his/her designee, during an inspection of records conducted by GSA as part of that agency's responsibility to recommend improvements in records management practices and programs, under authority of 44 U.S.C. 2904 and 2906. Such disclosure shall be made in accordance with the GSA regulations governing inspection of records for this purpose, and any other relevant (i.e., GSA or Commerce) directive. Such disclosure shall not be used to make determinations about individuals.

8. A record from this system of records may be disclosed, as a routine use, to the public after either publication of the application pursuant to 35 U.S.C. 122(b) or issuance of a patent pursuant to 35 U.S.C. 151. Further, a record may be disclosed, subject to the limitations of 37 CFR 1.14, as a routine use, to the public if the record was filed in an application which became abandoned or in which the proceedings were terminated and which application is referenced by either a published application, an application open to public inspections or an issued patent.

9. A record from this system of records may be disclosed, as a routine use, to a Federal, State, or local law enforcement agency, if the USPTO becomes aware of a violation or potential violation of law or regulation.

Amazon.com, Inc., Amazon.com Services LLC - Ex. 1017, Page 000147

Copy provided by USPTO from the IFW Image Database on 08/17/2012

Europäisches Patentamt
European Patent Office
Office européen des brevets

European Patent Office
80298 MUNICH
GERMANY

Questions about this communication ?
Contact Customer Services at www.epo.org/contact

NOKIA CORPORATION et al.
IPR Department
Jussi Jaatinen
Keilalahdentie 4
FI-02150 Espoo
FINLANDE

Date
14.03.14

Reference	Application No./Patent No.
	12845839.5 - 1907 PCT/FI2012051070
Applicant/Proprietor	
Nokia Corporation	

Entry into the European phase before the European Patent Office

The following information describes the procedural steps required for entry into the European phase before the European Patent Office (EPO). You are advised to read it carefully because failure to take the necessary action in due time can lead to a loss of rights.

1. The above mentioned international patent application has been given the **European application No. 12845839.5**.

2. Applicants **without a residence or their principal place of business** in an EPC Contracting State may themselves initiate European processing of their international applications, provided they do so before expiry of the 31st month from the priority date.

   During the European phase before the EPO as designated or elected Office, however, such applicants **must** be represented by a professional representative (Art. 133(2) and Art. 134(1) and (8) EPC).

   Where, at the expiry of the time period laid down in Rule 163(5) EPC, the requirements of Article 133(2) EPC have not been complied with, the European patent application will be **refused**, pursuant to Rule 163(6) EPC.

   Please note that a professional representative authorised to act before the EPO and who acted for the applicant during the international phase does not automatically become the representative for the European phase. Applicants are therefore strongly advised to appoint in good time any representative they wish to initiate the European phase for them; otherwise the EPO has to send all communications directly to the applicant.

3. Applicants **with a residence or their principal place of business** in an EPC Contracting State are not obliged to appoint for the European phase a professional representative authorised to act before the EPO. However, in view of the complexity of the procedure it is recommended that they do so.

4. Applicants and professional representatives are also strongly advised to initiate the European phase using **EPO Form 1200**. It is available free of charge from the EPO or via the EPO website at **www.epo.org**. Similarly, it can be or generated with the Online Filing software, obtainable free of charge from the EPO (**www.epoline.org**) The use of the form is not compulsory.

Amazon.com, Inc., Amazon.com Services LLC - Ex. 1017, Page 000148

5. Where the EPO acts as designated or elected Office (Art. 22(1) and (3) and 39(1) PCT), to enter the European phase before the EPO, the **following acts** must be performed by the applicant within **31 months** from the date of filing of the international application or (where applicable) the earliest priority date:

   a) Supply a translation of the international application into an EPO official language, if the International Bureau did not publish the application in such language (Art. 22(1) PCT and R. 159(1)(a) EPC);

   b) Specify the application documents, as originally filed or as amended, on which the European grant procedure is to be based (R. 159(1)(b) EPC);

   c) Pay the filing fee and, where applicable, the additional fee for a European patent application comprising more than 35 pages (R. 159(1)(c) EPC, Art. 2, items 1, 1a Rules relating to Fees);

   d) Pay the search fee where a supplementary European search report has to be drawn up (R. 159(1)(e) EPC);

   e) Pay the designation fee if the time limit laid down in Rule 39(1) EPC (i.e. six months after publication of the international search report) has expired before the 31-month period pursuant to Rule 159(1) EPC (R. 159(1)(d) EPC);

   f) File the written request for examination and pay the examination fee if the time limit laid down in Rule 70(1) EPC has expired before the 31-month period pursuant to Rule 159(1) EPC (R. 159(1)(f) EPC);

   g) Pay the renewal fee in respect of the third year, if the fee has fallen due (see Rule 51(1) EPC) before expiry of the 31-month period pursuant to Rule 159(1) EPC (R. 159(1)(g) EPC);

   h) File, where applicable, the certificate of exhibition referred to in Article 55(2) and Rule 25 EPC (R. 159(1)(h) EPC);

   i) Pay the claims fees for the sixteenth and each subsequent claim when the application documents on which the European grant procedure is to be based comprise more than fifteen claims (R. 162(1) EPC). For applications entering the European phase on or after 1 April 2009, a higher amount is payable for the 51st and each subsequent claim (Decision of the Administrative Council of 14 December 2007 amending the Rules relating to Fees, OJ EPO 2008, 10).

   If either the translation of the international application or the request for examination is not filed in time, or if the filing fee, the additional fee, the search fee, the designation fee or the examination fee is not paid in due time, the application shall be deemed to be withdrawn (R. 160(1) EPC).

6. Payment of fees

   An up-to-date guidance for the payment of fees, expenses and prices and a list of the euro accounts of the European Patent Organisation are published in each issue of the Official Journal of the EPO. The guidance includes inter alia a reference to the latest version of the Schedule of fees and expenses where the amounts of fees are set out.

   The Schedule of fees and expenses, published as a Supplement to the Official Journal of the EPO, is also available on the EPO website (**www.epo.org**) and can be found under **www.epo.org/schedule-of-fees**, which allows the viewing, downloading and searching for individual fee amounts, both current and previous.

   Applicants should always check the fee amounts applying at the time of payment.

Amazon.com, Inc., Amazon.com Services LLC - Ex. 1017, Page 000149

Payments can be validly made by any person. Permissible methods of payment are laid down in Article 5 Rules relating to Fees. Please note that payment cannot be made by cheque sent to the EPO.

For information on the calculation of the additional fee for applications comprising more than 35 pages, see Notice from the European Patent Office dated 26 January 2009 concerning the 2009 fee structure (OJ EPO 2009, 118), Notice supplementing the notice from the European Patent Office dated 26 January 2009 concerning the 2009 fee structure (OJ EPO 2009, 338) and Guidelines for Examination in the EPO, April 2010, A-III, 13.2.

For an overview of search and examination fees, see Notice from the European Patent Office dated 6 February 2012 (OJ EPO 2012, 212). Fee information is also published on the EPO website under **www.epo.org/fees.**

7. Restoration of priority right

   Where the international application contains a priority claim to an earlier application and it has been filed within two months from the expiration of the 12-month priority period, a request for restoration before the EPO as designated Office (R. 49*ter*.2 PCT) applies under the following circumstances:

   a) No request for restoration filed before the receiving Office (RO) during the international phase (R. 26*bis*.3 PCT)
   b) Negative decision by the RO irrespective of the criterion applied (due care/ unintentionality)
   c) Positive decision by the RO based on the unintentionality criterion.

   For a request to be admissible, it must be filed and the requisite fee must be paid (R. 49*ter*.2(b)(iii) and R. 49*ter*.2(d) PCT) within one month from the applicable time limit under Article 22 PCT for entering the regional phase (R. 49*ter*.2(b)(i) PCT). The request for restoration also needs to state the reasons for the failure to file the international application within the priority period (Rule 49*ter*.2(b)(ii) PCT).

8. If the applicant had appointed a representative during the application's international phase, the present Form will be sent to the representative, asking him to inform the applicant accordingly.
   All subsequent communications will be sent to the applicant, or - if the EPO is informed of his appointment in time - to the applicant's European representative.

9. For more details about time limits and procedural acts before the EPO as designated or elected Office, see the EPO brochure "How to get an European patent", Guide for applicants - Part 2, PCT procedure before the EPO - "Euro-PCT" (EPO PCT Guide). This brochure, the list of professional representatives before the EPO, Form 1200 and details of the latest fees are available on the Internet under **http://www.epo.org**.

10. **Programme for accelerated prosecution of European patent applications - "PACE"**

    Applicants wishing to accelerate proceedings before the EPO as designated or elected Office may request accelerated search and/or examination under the PACE programme (Notice from the European Patent Office dated 4 May 2010 concerning the programme for accelerated prosecution of European patent applications - "PACE", OJ EPO 2010, 352). To be as effective as possible, this should preferably be requested immediately on entry into the European phase.

Receiving Section

Amazon.com, Inc., Amazon.com Services LLC - Ex. 1017, Page 000150

NOKIA

28.04.2014

Intellectual Property Rights

European Patent Office
Dir. 524
Legal Division
80298 Munich
Germany
Fax. +49 89 2399 5148

Dear Sirs,

Change of address - Association No. 383

We wish to inform you that the new address of our Association is:

Nokia Corporation
Intellectual Property Department
Karakaari 7
FI-02160 Espoo
Finland

Tel: +358 7180 08000
Fax: +358 10 448 1001

Please confirm receipt. √

Yours faithfully,

Virpi Tognetty
Nokia Corporation
Director, Patenting Operations

S FREP

C 05. 05. 14
09/7/14

Europäisches Patentamt
European Patent Office
Office européen des brevets

Entry into the European phase (EPO as designated or elected Office)

To the European Patent Office

European application number	EP12845839.5
PCT application number	PCT/FI2012/051070
PCT publication number	WO2013064749
Applicant's or representative's reference	NC77198EP
International Filing Date	02.11.2012
International Searching Authority (ISA)	FI
International Preliminary Examining Authority (IPEA)	not applicable
1. Applicant	
Indications concerning the applicant(s) are contained in the international publication or were recorded by the International Bureau after the international publication.	☒
Changes which have not yet been recorded by the International Bureau are set out here:	☐
2. Representative	
This is the representative who will be listed in the Register of European Patents and to whom notifications will be made	
Representative 1	
Name:	Nokia Corporation
Department:	IPR Department
Association No.:	383 Nokia Corporation
Address of place of business:	Karakaari 7
	02610 Espoo,
	Finland
Telephone:	+358 10 448 8000
Fax:	+358 10 448 1001
e-mail:	ipr.inhouse@nokia.com
3. Authorisation	
An individual authorisation is attached.	☐
A general authorisation has been registered under No:	☐
A general authorisation has been filed, but not yet registered.	☐
The authorisation filed with the EPO as PCT receiving Office expressly includes the European phase.	☐
4. Request for examination	
Examination of the application under Art. 94 EPC is hereby requested. The examination fee is being (has been, will be) paid.	☒
Request for examination in an admissible non-EPO language:	☐
The applicant waives his right to be asked under Rule 70(2) EPC whether he wishes to proceed further with the application.	☐
The/Each applicant hereby declares that he is an entity or a natural person under Rule 6(4) EPC.	☐
5. Copies	
Additional copies of the documents cited in the supplementary European search report are requested.	☐
Number of additional sets of copies	
6. Documents intended for proceedings before the EPO	
Number of claims on entry into the European phase:	18
6.1 Proceedings before the EPO as designated Office (PCT I) are to be based on the following documents:	

Amazon.com, Inc., Amazon.com Services LLC - Ex. 1017, Page 000152

the application documents published by the International Bureau (with all claims, description and drawings), where applicable with amended claims under Art. 19 PCT	☐
unless replaced by the amendments attached.	☒
Where necessary, clarifications should be attached as `Other documents`	
6.2 Proceedings before the EPO as elected Office (PCT II) are to be based on the following documents:	
the documents on which the international preliminary examination report is based, including any annexes	☐
unless replaced by the amendments attached.	☐
Where necessary, clarifications should be attached as `Other documents`	
If the EPO as International Preliminary Examining Authority has been supplied with test reports, these may be used as the basis of proceedings before the EPO.	☐
6.3 A copy of the results of the search carried out by the authority with which the previous application(s) whose priority is claimed was (were) filed is attached (R. 141(1) EPC).	☐
6.4 The applicant waives his right to the communication under Rules 161(1) or (2) and 162 EPC.	☐
7. Translations	
Translations in one of the official languages of the EPO (English, French, German) are attached as crossed below:	☐
** In proceedings before the EPO as designated or elected Office (PCT I + II):*	
Translation of the international application (description, claims, any text in the drawings) as originally filed, of the abstract as published and of any indication under Rule 13bis.3 and 13bis.4 PCT regarding biological material	☐
Translation of the priority application(s) (to be filed only at the EPO's request, Rule 53(3) EPC)	☐
It is hereby declared that the international application as originally filed is a complete translation of the previous application (Rule 53(3) EPC)	☐
** In addition, in proceedings before the EPO as designated Office (PCT I):*	
Translation of amended claims and any statement under Art. 19 PCT, if the claims as amended are to form the basis for the proceedings before the EPO (see Section 6).	☐
** In addition, in proceedings before the EPO as elected Office (PCT II):*	
Translation of annexes to the international preliminary examination report	☐
8. Biological material	
The invention uses and/or relates to biological material deposited under Rule 31 EPC.	☐
The particulars referred to in Rule 31(1)(c) EPC (if not yet known, the depositary institution and the identification reference(s)) [number, symbols, etc.] of the depositor) are given in the international publication or in the translation submitted in Section 7 on:	☐
page(s) / line(s)	
The receipt(s) of deposit issued by the depositary institution	
is (are) enclosed.	☐
will be filed later.	☐
Waiver of the right to an undertaking from the requester pursuant to Rule 33(2) EPC attached.	☐
9. Nucleotide and amino acid sequences	
The international application discloses nucleotide and/or amino acid sequences.	☐
9.1 The sequence listing was filed under Rule 5.2(a) PCT, or furnished to the EPO as ISA under Rule 13ter.1(a) PCT, or is otherwise available to the EPO, in computer-readable format in accordance with WIPO ST.25.	☐
9.2	
The sequence listing is attached in computer-readable format in accordance with WIPO Standard ST.25	☐
The sequence listing is attached in PDF format.	☐

The sequence listing does not include matter which goes beyond the content of the application as filed. ☐

10. Designation fees

All the contracting states party to the EPC at the time of filing of the international patent application and designated in the international application are deemed to be designated (see Article 79(1) EPC). ☒

The following states, which were contracting states to the EPC at the time of filing of the international application, are designated:

AL AT BE BG CH&LI CY CZ DE DK EE ES FI FR GB GR HR HU IE IS IT LT LU LV MC MK MT NL NO PL PT RO RS SE SI SK SM TR

11. Extension/Validation

This application is deemed to be a request to extend the effects of the European patent application and the European patent granted in respect of it to all non-contracting states to the EPC designated in the international application with which extension or validation agreements were in force on the date on which the application was filed. However, the request is deemed withdrawn if the extension fee or the validation fee, whichever is applicable, is not paid within the prescribed time limit. ☐

11.1 It is intended to pay the extension fee(s) for the following state(s):

11.2 It is intended to pay the validation fee(s) for the following state(s):

Not applicable

Note: Under the automatic debiting procedure, extension and/or validation fees will be debited only for states indicated here unless the EPO is instructed otherwise before expiry of the period for payment.

12. List of enclosed documents

	Description of document	Original file name	Assigned file name
1	Combined Amendments	NC77198EP-Amended claims.pdf	AMSPECEPO-1.pdf
2	PreConversion Archive	NC77198EP-Amended claims.zip	OLF-ARCHIVE.zip

13. Mode of payment: Debit from deposit account ☒

Currency: EUR

The European Patent Office is hereby authorised, to debit from the deposit account with the EPO any fees and costs indicated on the fees page.

Deposit account number: 28150026

Account holder: Nokia Corporation

Deferred execution date / total amount to be debited on: (or on the date of receipt if the submission date is after the deferred execution date you have indicated)

Important information:
• This functionality allows you to indicate explicitly that your payment order is to be executed at a later date than the submission date. In this case, the payment date will be deemed to be the deferred execution date, provided that you have sufficient funds on your deposit account on that date.
• Please choose the deferred execution date option only if the fees are to be debited on a future date, as otherwise the default execution date is date of receipt.
• The deferred execution date can be a maximum of 40 days in the future.

14. Any refunds should be made to the following EPO deposit account: ☒

Number and account holder: Nokia Corporation, 28150026

15. Fees

		Factor/reduction applied	Fee schedule	Amount to be paid
15-1	002 Fee for a European search - Applications filed on/after 01.07.2005	-1100	1 285.00	185.00
15-2	005e Designation fee - For all contracting States designated for applications filed on/after 01.04.2009	1	580.00	580.00
15-3	006 Examination fee - For applications filed on/after 01.07.2005	1	1 620.00	1 620.00
15-4	015 Claims fee - For the 16th to the 50th claim	3	235.00	705.00
15-5	15e Claims fee - For the 51st and each subsequent claim	0	580.00	0.00

Amazon.com, Inc., Amazon.com Services LLC - Ex. 1017, Page 000154

15-6	020 Filing fee - entry EP phase - online	1	120.00	120.00
15-7	520 Additional filing fee for the 36th and each subsequent page - entry into EP phase	18	15.00	270.00
	Total:		**EUR**	**3 480.00**

16. Annotations

17. Signature(s) of applicant(s) or representative

Place:	**Espoo**
Date:	**07 May 2014**
Signed by:	**/Virpi Tognetty/**
Association No.:	**Nokia Corporation**
Capacity:	**(Representative)**

Table for section 6 of Form 1200.3

In accordance with the Notice from the European Patent Office dated 26 January 2009 concerning the 2009 fee structure (OJ EPO 2009, 118, and Guidelines for Examination in the EPO, April 2009, A-III, 13.2), the amount of the additional fee (Art. 2, item 1a, Rules relating to Fees) for the pages of this European patent application is calculated as follows:

Documents intended for proceedings before the EPO (R. 159 (1) (b) EPC) and for calculating the additional fee (Art. 2, item 1a, RFees):

		Page(s) from ... to ...	Number of pages
Description:	International application as published	1 to 34	34
Claims:	Amendments filed on entry into European phase	35 to 39	5
Drawings:	International application as published	1 to 13	13
Abstract:	Default count: one page		1
Total number of pages			53
Fee-exempt pages (Art. 2, item 1a, RFees)			-35
Number of pages to be paid for			18
			(x 15 EUR per page)
Total amount payable		EUR	270

NC77198EP

NOKIA

Intellectual Property Rights

7 May 2014

European Patent Office
Bob-van-Benthem-Platz 1
80469 Munich
GERMANY

Change of Address of the Applicant
European patent applications in the name of Nokia Corporation

Dear Sirs

The address of Nokia Corporation has changed to Karakaari 7, 02610 Espoo, Finland.

Please record the change of address of the applicant in **all** pending European patent applications in which the sole or co-applicant presently is Nokia Corporation.

The new address for Nokia Corporation in all such pending files should be recorded as:

Nokia Corporation
Karakaari 7
02610 Espoo
FINLAND

Please acknowledge the receipt of this letter by returning the enclosed EPO Form 1037.

Yours faithfully
Nokia Corporation, Intellectual Property Rights

Virpi Tognetty
European Patent Attorney

ENCL EPO Form 1037

Europäisches Patentamt
European Patent Office
Office européen des brevets

Posted

Einsender[1]/Sender[1]/Expéditeur[1] (bitte ausfüllen/please complete/veuillez compléter) :

Nokia Corporation
Karakaari 7
02610 Espoo
FINLAND

Fax. +358 10 448 1001

80298 Munich
Germany
Tel. +49 (0)89 2399-0 I Fax -4465

P.O. Box 5818
2280 HV Rijswijk
Netherlands
Tel. +31 (0)70 340-2040 I Fax -3016

10958 Berlin
Germany
Tel. +49 (0)30 25901-0 I Fax -840

Empfangsbescheinigung[2] für beim Europäischen Patentamt nachgereichte Unterlagen zu Patentanmeldungen/Patenten

Datum und Ort des Eingangs sind aus dem Eingangsstempel bzw. der Perforation dieser Empfangsbescheinigung ersichtlich.
(M + Datum = Einreichungsort München;
H + Datum = Einreichungsort Den Haag;
Datum + B = Einreichungsort Berlin)

Acknowledgement of receipt[2] by the European Patent Office of subsequently filed items relating to patent applications/patents

The date and place of receipt are indicated by the stamp or perforation on this receipt.
(M + date = Munich as place of receipt;
H + date = The Hague as place of receipt;
date + B = Berlin as place of receipt)

Accusé de réception[2] de pièces envoyées à l'Office européen des brevets postérieurement au dépôt d'une demande de brevet/à la délivrance d'un brevet européen

La date et le lieu de réception sont indiqués par le cachet de réception ou la perforation du présent accusé de réception.
(M + date = pièces reçues à Munich ;
H + date = pièces reçues à La Haye ;
date + B = pièces reçues à Berlin)

Eingereichte Unterlagen / Items filed / Pièces produites

Anmeldenummer/Patentnummer Application Number/Patent Number Numéro de la demande/numéro du brevet	Ihr Zeichen Your reference Votre référence	ggfs. Art und Datum der Unterlagen[3] Nature and date of items (optional)[3] Nature et date des pièces (facultatif)[3]
1.		Request for change of address
2.		
3.		
4.		
5.		
6.		
7.		
8.		

Nachgereichte Unterlagen können auch online eingereicht werden; siehe *www.epoline.org*
Items may also be filed subsequently online; please see *www.epoline.org*
Les pièces produites ultérieurement peuvent être aussi déposées en ligne ; voir *www.epoline.org*

1) Bitte Adressfeld ausfüllen
2) Bitte 2-fach einreichen
3) Der Eingang der angegebenen Unterlagen wird bestätigt. Enthält diese Spalte keine Eintragungen, so wird lediglich bestätigt, dass eine Sendung zu dem angegebenen Aktenzeichen eingegangen ist.

(1) Please fill in address.
(2) Please submit two copies.
(3) Receipt of the items indicated is confirmed. If this column does not contain any entries, only the receipt of an item for the file indicated is confirmed.

1) Veuillez compléter le champ ci-dessous.
2) A soumettre en 2 exemplaires.
3) La réception des pièces indiquées est confirmée. Faute de mention dans cette colonne, le présent accusé de réception se rapporte à une pièce quelconque envoyée sous la référence indiquée.

EPA/EPO/OEB 1037.1 12.07

Empfangsbescheinigung für Einsender I Acknowledgement of receipt for sender I Accusé de réception à l'intention de l'expéditeur

PATENT COOPERATION TREATY

PCT

INTERNATIONAL PRELIMINARY REPORT ON PATENTABILITY

(Chapter I of the Patent Cooperation Treaty)

(PCT Rule 44*bis*)

Applicant's or agent's file reference NC77198WO	**FOR FURTHER ACTION**	See item 4 below
International application No. PCT/FI2012/051070	International filing date *(day/month/year)* 02 November 2012 (02.11.2012)	Priority date *(day/month/year)* 04 November 2011 (04.11.2011)
International Patent Classification (8th edition unless older edition indicated) See relevant information in Form PCT/ISA/237		
Applicant NOKIA CORPORATION		

1. This international preliminary report on patentability (Chapter I) is issued by the International Bureau on behalf of the International Searching Authority under Rule 44 *bis*.1(a).

2. This REPORT consists of a total of 8 sheets, including this cover sheet.

   In the attached sheets, any reference to the written opinion of the International Searching Authority should be read as a reference to the international preliminary report on patentability (Chapter I) instead.

3. This report contains indications relating to the following items:

☒	Box No. I	Basis of the report
☐	Box No. II	Priority
☐	Box No. III	Non-establishment of opinion with regard to novelty, inventive step and industrial applicability
☐	Box No. IV	Lack of unity of invention
☒	Box No. V	Reasoned statement under Article 35(2) with regard to novelty, inventive step or industrial applicability; citations and explanations supporting such statement
☐	Box No. VI	Certain documents cited
☒	Box No. VII	Certain defects in the international application
☐	Box No. VIII	Certain observations on the international application

4. The International Bureau will communicate this report to designated Offices in accordance with Rules 44*bis*.3(c) and 93*bis*.1 but not, except where the applicant makes an express request under Article 23(2), before the expiration of 30 months from the priority date (Rule 44*bis* .2).

	Date of issuance of this report 06 May 2014 (06.05.2014)
The International Bureau of WIPO 34, chemin des Colombettes 1211 Geneva 20, Switzerland Facsimile No. +41 22 338 82 70	Authorized officer Philippe Bécamel e-mail: pt03.pct@wipo.int

Form PCT/IB/373 (January 2004)

PATENT COOPERATION TREATY

From the
INTERNATIONAL SEARCHING AUTHORITY

To:
Nokia Corporation
IPR Department Jussi Jaatinen
Keilalahdentie 4
FI- 02150 Espoo
FINLAND

PCT

WRITTEN OPINION OF THE
INTERNATIONAL SEARCHING AUTHORITY

(PCT Rule 43*bis*.1)

Date of mailing *(day/month/year)* 27 March 2013 (27.03.2013)	
Applicant's or agent's file reference NC77198WO	**FOR FURTHER ACTION** See paragraph 2 below

International application No.	International filing date *(day/month/year)*	Priority date *(day/month/year)*
PCT/FI2012/051070	02 November 2012 (02.11.2012)	04 November 2011 (04.11.2011)

International Patent Classification (IPC) or both national classification and IPC
See supplemental box

Applicant
NOKIA CORPORATION

1. This opinion contains indications relating to the following items:

- [x] Box No. I Basis of the opinion
- [ ] Box No. II Priority
- [ ] Box No. III Non-establishment of opinion with regard to novelty, inventive step and industrial applicability
- [ ] Box No. IV Lack of unity of invention
- [x] Box No. V Reasoned statement under Rule 43*bis*.1(a)(i) with regard to novelty, inventive step and industrial applicability; citations and explanations supporting such statement
- [ ] Box No. VI Certain documents cited
- [x] Box No. VII Certain defects in the international application
- [ ] Box No. VIII Certain observations on the international application

2. **FURTHER ACTION**

If a demand for international preliminary examination is made, this opinion will be considered to be a written opinion of the International Preliminary Examining Authority ("IPEA") except that this does not apply where the applicant chooses an Authority other than this one to be the IPEA and the chosen IPEA has notified the International Bureau under Rule 66.1*bis*(b) that written opinions of this International Searching Authority will not be so considered.

If this opinion is, as provided above, considered to be a written opinion of the IPEA, the applicant is invited to submit to the IPEA a written reply together, where appropriate, with amendments, before the expiration of 3 months from the date of mailing of Form PCT/ISA/220 or before the expiration of 22 months from the priority date, whichever expires later.

For further options, see Form PCT/ISA/220.

Name and mailing address of the ISA/FI	Date of completion of this opinion	Authorized officer
National Board of Patents and Registration of Finland P.O. Box 1160, FI-00101 HELSINKI, Finland Facsimile No. +358 9 6939 5328	26 March 2013 (26.03.2013)	Timo Laakso Telephone No. +358 9 6939 500

Form PCT/ISA/237 (cover sheet) (July 2011)

WRITTEN OPINION OF THE INTERNATIONAL SEARCHING AUTHORITY

International application No.
PCT/FI2012/051070

Box No. I Basis of this opinion

1. With regard to the **language**, this opinion has been established on the basis of:

   ☒ the international application in the language in which it was filed.

   ☐ a translation of the international application into _____ which is the language of a translation furnished for the purposes of international search (Rules 12.3(a) and 23.1(b)).

2. ☐ This opinion has been established taking into account the **rectification of an obvious mistake** authorized by or notified to this Authority under Rule 91 (Rule 43*bis*.1(a))

3. With regard to any **nucleotide and/or amino acid sequence** disclosed in the international application, this opinion has been established on the basis of a sequence listing filed or furnished:

   a. (means)

   ☐ on paper
   ☐ in electronic form

   b. (time)

   ☐ in the international application as filed
   ☐ together with the international application in electronic form
   ☐ subsequently to this Authority for the purposes of search

4. ☐ In addition, in the case that more than one version or copy of a sequence listing has been filed or furnished, the required statements that the information in the subsequent or additional copies is identical to that in the application as filed or does not go beyond the application as filed, as appropriate, were furnished.

5. Additional comments:

Amazon.com, Inc., Amazon.com Services LLC - Ex. 1017, Page 000161

Box No. V **Reasoned statement under Rule 43*bis*.1(a)(i) with regard to novelty, inventive step or industrial applicability; citations and explanations supporting such statement**

1. Statement

Novelty (N)	Claims	1-20	YES
	Claims		NO
Inventive step (IS)	Claims	1-20	YES
	Claims		NO
Industrial applicability (IA)	Claims	1-20	YES
	Claims		NO

2. Citations and explanations:

2.1 Documents cited in the International Search Report

D1: WO 2011062392 A2 (SK TELECOM CO LTD et al.) 26 May 2011 (26.05.2011)
D2: US 2011170602 A1 (LEE TAMMY et al.) 14 July 2011 (14.07.2011)
D3: OUDIN, S. et al.: "Block merging for quadtree-based video coding", IEEE Int. Conf. on Multimedia and Expo, 11-15 July 2011, 6p.
D4: SULLIVAN, G. J.: "Overview of the High Efficiency Video Coding (HEVC) Standard", IEEE Trans. on Circuits and Systems for Video technology, vol. 22, no. 12, Dec. 2012, pp. 1649-1668.

It is assumed that the contents of WO2011062392 correspond to those of US2012307905 which belongs to the same patent family.

2.2 Claimed invention

As described in claim 1, the invention relates to a method for video coding, comprising:

(F1) receiving a block of pixels including a prediction unit;
(F2) determining a set of spatial motion vector prediction candidates for the block of pixels; the spatial motion vector prediction candidates being provided with motion information;
(F3) selecting a first spatial motion vector prediction candidate from the set of spatial motion vector prediction candidates as a potential spatial motion vector prediction candidate to be included in a merge list for the prediction unit;
(F4) determining a subset of spatial motion vector predictions based on the location of the block associated with the first spatial motion vector prediction candidate;
(F5) comparing motion information of the first spatial motion vector prediction candidate with motion information of the spatial motion vector prediction candidate in the determined subset of spatial motion vector prediction candidates;
(F6) if at least one of the comparisons indicates that the motion vector information of the spatial motion vector prediction candidates correspond with each other, excluding the first spatial motion vector prediction candidate from the merge list.

(F1)…(F6) denote the technical features of the invention. Independent claims 9 and 15-20 define another method, two apparatuses, two storage mediums and two apparatuses with the corresponding technical features.

In addition, dependent claims 2-8 and 10-14 specify preferred embodiments of the invention.

The objective of the invention is to provide an improved arrangement for video coding for mobile communications systems.

Continued to next page

Continuation of: Box V (1 / 2)

2.3 Novelty under PCT Article 33(2)

D1 (abstract, claim 1) discloses a method of encoding a motion vector that includes: selecting one of a plurality of predicted candidate motion vector sets by using motion information of neighboring blocks of a current block; selecting one of predicted candidate motion vectors within a selected predicted candidate motion vector set, as a predicted motion vector; encoding a differential motion vector representing a difference between a current motion vector or motion vector of the current block and a selected predicted motion vector; and encoding a predicted motion vector index indicating the selected predicted motion vector. As a motion vector is encoded after selecting an efficient predicted candidate motion vector set, the size of a differential vector to be encoded can be reduced without necessarily encoding additional information to indicate which set of predicted candidate motion vectors has been selected, resulting in improved compression efficiency of motion vectors and in turn the improved video compression efficiency.

D2 introduces methods and apparatuses for encoding and decoding a motion vector. The method of encoding a motion vector includes: selecting a mode from among a first mode in which information indicating a motion vector predictor of at least one motion vector predictor is encoded and a second mode in which information indicating generation of a motion vector predictor based on pixels included in a previously encoded area adjacent to a current block is encoded; determining a motion vector predictor of the current block according to the selected mode and encoding information about the motion vector predictor of the current block; and encoding a difference vector between a motion vector of the current block and the motion vector predictor of the current block.

D3 presents an approach for block merging that removes redundancies by using a single parameter for a whole motion-compensated region of contiguous blocks. The proposed technique provides improvement over the specified H.264/AVC video coding standard and is included in the novel High Efficiency Video Coding (HEVC) standard.

D4 is a tutorial overview article of the novel HEVC video coding standard.

Documents D1-D3 represent the most relevant prior art. D4 is a later document not in conflict with the application that is cited to understand the theory underlying the invention.

2.3.1 Independent claims

Document D1 is regarded as the prior art closest to the subject matter of independent claim 1.

Document D1 (abstract, claim 1) discloses a methods for encoding a motion vector by selecting a set of predicted candidate motion vectors by using motion information of neighboring blocks of a current block. The subject matter of claim 1 differs from this in that merging of spatial motion vectors is not considered in D1 as in feature (F6) of claim 1. The subject matter of claim 1 is therefore novel. The same applies to independent claims 9 and 15-20 with the corresponding technical features.

2.3.2 Dependent claims

Because independent claims 1 and 9 are novel, also dependent claims 2-8 and 10-14 are novel.

Continued to next page

Supplemental Box

Continuation of: Box V (2 / 2)

2.4 Inventive step under PCT Article 33(3)

2.4.1 Independent claims

The solution presented in claim 1 is neither described in nor made obvious by the available prior art. Thus, claim 1 involves an inventive step. The same applies to independent claims 9 and 15-20 with the corresponding technical features.

2.4.2 Dependent claims

Because independent claims 1 and 9 involve an inventive step, also dependent claims 2-8 and 10-14 involve an inventive step.

2.5 Industrial applicability under PCT Article 33(4)

Claims 1-20 meet the requirement of industrial applicability because the claimed subject matter can be made or used in industry.

Amazon.com, Inc., Amazon.com Services LLC - Ex. 1017, Page 000164

Box No. VII Certain defects in the international application

The following defects in the form or contents of the international application have been noted:

Contrary to the requirements of PCT Rule 5.1(a)(ii), no relevant prior art is indicated in the description, nor are the documents reflecting such art identified therein.

Claims are not drafted in a two-part form in accordance with PCT Rule 6.3(b), which in the present case would be appropriate, with those features known from the prior art placed in the preamble (PCT Rule 6.3(b)(i)) and the remaining features included in the characterising part (PCT Rule 6.3(b)(ii)).

The features of the claims are not provided with reference signs placed in parentheses (PCT Rule 6.2(b)).

Supplemental Box

In case **the space in any of the preceding boxes is not sufficient.**

Continuation of: International Patent Classification (IPC)

Int.Cl.
H04N 7/26 (2006.01)
H04N 7/50 (2006.01)
H04N 7/34 (2006.01)
G06T 9/00 (2006.01)

Amazon.com, Inc., Amazon.com Services LLC - Ex. 1017, Page 000166

Claims:

1. A method comprising:

receiving a block of pixels including a prediction unit;

determining a set of spatial motion vector prediction candidates for the block of pixels; the spatial motion vector prediction candidates being provided with motion information;

selecting a first spatial motion vector prediction candidate from the set of spatial motion vector prediction candidates as a potential spatial motion vector prediction candidate to be included in a merge list for the prediction unit;

determining a subset of spatial motion vector predictions based on the location of the block associated with the first spatial motion vector prediction candidate;

comparing motion information of the first spatial motion vector prediction candidate with motion information of the spatial motion vector prediction candidate in the determined subset of spatial motion vector prediction candidates;

if at least one of the comparisons indicates that the motion vector information of the spatial motion vector prediction candidates correspond with each other, excluding the first spatial motion vector prediction candidate from the merge list.

2. The method according to claim 1 comprising selecting spatial motion vector prediction candidates from the set of spatial motion vector prediction candidates as the potential spatial motion vector prediction candidate in a predetermined order.

3. The method according to claim 1 or 2, comprising comparing motion information of the potential spatial motion vector prediction candidate with motion information of at most one other spatial motion vector prediction candidate of the set of spatial motion vector prediction candidates.

4. The method according to any of the claims 1 to 3 comprising examining whether the received block of pixels is divided into a first prediction unit and a second prediction unit; and if so, excluding the potential spatial motion vector prediction candidate from the merge list if the prediction unit is the second prediction unit.

5. The method according to any of the claims 1 to 4, further comprising

determining a maximum number of spatial motion vector prediction candidates to be included in a merge list; and

limiting the number of spatial motion vector prediction candidates in the merge list smaller or equal to the maximum number .

6. The method according to any of the claims 1 to 5 comprising:

Amazon.com, Inc., Amazon.com Services LLC - Ex. 1017, Page 000167

examining, if the number of spatial motion vector prediction candidates in the merge list smaller than the maximum number;

if so, examining whether a prediction unit to which the potential spatial motion vector prediction candidate belongs is available for motion prediction;

if so, performing at least one of the following:

for the potential spatial motion vector prediction candidate on the left side of the prediction unit, excluding the potential spatial motion vector prediction candidate from the merge list if any of the following conditions are fulfilled:

- the received block of pixels is vertically divided into a first prediction unit and a second prediction unit, and the prediction unit is the second prediction unit;
- the received block of pixels is horizontally divided into a first prediction unit and a second prediction unit, and if the prediction unit is the second prediction unit, and the potential spatial motion vector prediction candidate has essentially similar motion information than the spatial motion vector prediction candidate above the prediction unit;

for the potential spatial motion vector prediction candidate above the prediction unit, excluding the potential spatial motion vector prediction candidate from the merge list if any of the following conditions are fulfilled:

- the received block of pixels is horizontally divided into a first prediction unit and a second prediction unit, and the prediction unit is the second prediction unit;
- the potential spatial motion vector prediction candidate has essentially similar motion information than the spatial motion vector prediction candidate on the left side of the prediction unit;

for the potential spatial motion vector prediction candidate, which is on the right side of the potential spatial motion vector prediction candidate above the prediction unit, excluding the potential spatial motion vector prediction candidate from the merge list if the potential spatial motion vector prediction candidate has essentially similar motion information than the spatial motion vector prediction candidate above the prediction unit;

for the potential spatial motion vector prediction candidate, which is below the potential spatial motion vector prediction candidate on the left side of the prediction unit, excluding the potential spatial motion vector prediction candidate from the merge list if the potential spatial motion vector prediction candidate has essentially similar motion information than the spatial motion vector prediction candidate on the left side of the prediction unit;

for the potential spatial motion vector prediction candidate cornerwise neighbouring the prediction unit, excluding the potential spatial motion vector prediction candidate from the merge list if any of the following conditions are fulfilled:

Amazon.com, Inc., Amazon.com Services LLC - Ex. 1017, Page 000168

– all the other potential spatial motion vector prediction candidates have been included in the merge list;

– the potential spatial motion vector prediction candidate has essentially similar motion information than the spatial motion vector prediction candidate above the prediction unit;

– the potential spatial motion vector prediction candidate has essentially similar motion information than the spatial motion vector prediction candidate on the left side of the prediction unit.

7. The method according to any of the claims 1 to 6 further comprising including a temporal motion prediction candidate into the merge list.

8. The method according to any of the claims 1 to 7 comprising selecting one motion vector prediction candidate from the merge list to represent a motion vector prediction for the block of pixels.

9. A method comprising:

receiving an encoded block of pixels including a prediction unit;

determining a set of spatial motion vector prediction candidates for the encoded block of pixels; the spatial motion vector prediction candidates being provided with motion information;

selecting a first spatial motion vector prediction candidate from the set of spatial motion vector prediction candidates as a potential spatial motion vector prediction candidate to be included in a merge list for the prediction unit;

determining a subset of spatial motion vector predictions based on the location of the block associated with the first spatial motion vector prediction candidate;

comparing motion information of the first spatial motion vector prediction candidate with motion information of another spatial motion vector prediction candidate of the set of spatial motion vector prediction candidates;

if at least one of the comparisons indicates that the motion vector information of the spatial motion vector prediction candidates correspond with each other, excluding the first spatial motion vector prediction candidate from the merge list.

10. The method according to claim 9 comprising comparing motion information of the potential spatial motion vector prediction candidate with motion information of at most one other spatial motion vector prediction candidate of the set of spatial motion vector prediction candidates.

11. The method according to claim 9 or 10 comprising examining whether the received encoded block of pixels is divided into a first prediction unit and a second prediction unit; and if so,

Amazon.com, Inc., Amazon.com Services LLC - Ex. 1017, Page 000169

excluding the potential spatial motion vector prediction candidate from the merge list if the prediction unit is the second prediction unit.

12. The method according to any of the claims 9 to 11, further comprising determining a maximum number of spatial motion vector prediction candidates to be included in a merge list; and

limiting the number of spatial motion vector prediction candidates in the merge list smaller or equal to the maximum number.

13. The method according to any of the claims 9 to 12 comprising:

examining, if the number of spatial motion vector prediction candidates in the merge list smaller than the maximum number;

if so, examining whether a prediction unit to which the potential spatial motion vector prediction candidate belongs is available for motion prediction;

if so, performing at least one of the following:

for the potential spatial motion vector prediction candidate on the left side of the prediction unit, excluding the potential spatial motion vector prediction candidate from the merge list if any of the following conditions are fulfilled:

- the received encoded block of pixels is vertically divided into a first prediction unit and a second prediction unit, and the prediction unit is the second prediction unit;
- the received encoded block of pixels is horizontally divided into a first prediction unit and a second prediction unit, and if the prediction unit is the second prediction unit, and the potential spatial motion vector prediction candidate has essentially similar motion information than the spatial motion vector prediction candidate above the prediction unit;

for the potential spatial motion vector prediction candidate above the prediction unit, excluding the potential spatial motion vector prediction candidate from the merge list if any of the following conditions are fulfilled:

- the received encoded block of pixels is horizontally divided into a first prediction unit and a second prediction unit, and the prediction unit is the second prediction unit;
- the potential spatial motion vector prediction candidate has essentially similar motion information than the spatial motion vector prediction candidate on the left side of the prediction unit;

for the potential spatial motion vector prediction candidate, which is on the right side of the potential spatial motion vector prediction candidate above the prediction unit, excluding the potential spatial motion vector prediction candidate from the merge list if the potential spatial

Amazon.com, Inc., Amazon.com Services LLC - Ex. 1017, Page 000170

motion vector prediction candidate has essentially similar motion information than the spatial motion vector prediction candidate above the prediction unit;

for the potential spatial motion vector prediction candidate, which is below the potential spatial motion vector prediction candidate on the left side of the prediction unit, excluding the potential spatial motion vector prediction candidate from the merge list if the potential spatial motion vector prediction candidate has essentially similar motion information than the spatial motion vector prediction candidate on the left side of the prediction unit;

for the potential spatial motion vector prediction candidate cornerwise neighbouring the prediction unit, excluding the potential spatial motion vector prediction candidate from the merge list if any of the following conditions are fulfilled:

- all the other potential spatial motion vector prediction candidates have been included in the merge list;
- the potential spatial motion vector prediction candidate has essentially similar motion information than the spatial motion vector prediction candidate above the prediction unit;
- the potential spatial motion vector prediction candidate has essentially similar motion information than the spatial motion vector prediction candidate on the left side of the prediction unit.

14. The method according to any of the claims 9 to 13 comprising selecting one motion vector prediction candidate from the merge list to represent a motion vector prediction for the received encoded block of pixels.

15. An apparatus comprising means for performing a method according to any one of claims 1 to 8.

16. An apparatus comprising means for performing a method according to any one of claims 9 to 14.

17. A computer-readable media having computer-readable instructions thereon which, when executed by one or more processors, cause one or more processors to perform a method of any one of claims 1 to 8.

18. A computer-readable media having computer-readable instructions thereon which, when executed by one or more processors, cause one or more processors to perform a method of any one of claims 9 to 14.

Amazon.com, Inc., Amazon.com Services LLC - Ex. 1017, Page 000171

Europäisches Patentamt
European Patent Office
Office européen des brevets

Acknowledgement of receipt

We hereby acknowledge receipt of the form for entry into the European phase (EPO as designated or elected Office) as follows:

Submission number	2747124
PCT application number	PCT/FI2012/051070
EP application number	12845839.5
Date of receipt	07 May 2014
Receiving Office	European Patent Office, The Hague
Your reference	NC77198EP
Applicant	
Country	
Documents submitted	package-data.xml application-body.xml AMSPECEPO-1.pdf\NC77198EP-Amended claims.pdf (5 p.) ep-euro-pct.xml epf1200.pdf (5 p.) OLF-ARCHIVE.zip\NC77198EP-Amended claims.zip
Submitted by	CN=Marjaana Saddok 15305
Method of submission	Online
Date and time receipt generated	07 May 2014, 12:11 (CEST)
Message Digest	ED:B9:27:9F:BE:62:E0:B5:EC:18:40:8F:28:EF:08:98:1E:FE:85:88

Amazon.com, Inc., Amazon.com Services LLC - Ex. 1017, Page 000172

Correction by the EPO of errors in debit instructions filed by eOLF

Errors in debit instructions filed by eOLF that are caused by the editing of Form 1038E entries or the continued use of outdated software (all forms) may be corrected automatically by the EPO, leaving the payment date unchanged (see decision T 152/82, OJ EPO 1984, 301 and point 6.3 ff ADA, Supplement to OJ EPO 10/2007).

/European Patent Office/

Amazon.com, Inc., Amazon.com Services LLC - Ex. 1017, Page 000173

Europäisches Patentamt
European Patent Office
Office européen des brevets

European Patent Office
80298 MUNICH
GERMANY

Questions about this communication ?
Contact Customer Services at www.epo.org/contact

Nokia Corporation
Karakaari 7
02610 Espoo
FINLANDE

Date
13.05.14

Reference	Application No./Patent No.
	12845839.5 - 1907
Applicant/Proprietor	
Nokia Corporation	

Communication

concerning the registration of amendments relating to

☐ a transfer (R. 22 and 85 EPC)

☑ entries pertaining to the applicant / the proprietor (R. 143(1)(f) EPC)

As requested, the entries pertaining to the applicant of the above-mentioned European patent application / to the proprietor of the above-mentioned European patent have been amended to the following:

AL AT BE BG CH CY CZ DE DK EE ES FI FR GB GR HR HU IE IS IT LI LT LU
LV MC MK MT NL NO PL PT RO RS SE SI SK SM TR
Nokia Corporation
Karakaari 7
02610 Espoo/FI

The registration of the changes has taken effect on 07.05.14.

In the case of a published application / a patent, the change will be recorded in the Register of European Patents and published in the European Patent Bulletin (Section I.12 / II.12).

Your attention is drawn to the fact that, in the case of the registration of a transfer, any automatic debit order only ceases to be effective from the date of its express revocation (cf. point 14(c) of the Arrangements for the automatic debiting procedure, Supplementary publication 4 - OJ EPO 2014).

Receiving Section / For the Examining Division / For the Opposition Division / For the Legal Division *)

Europäisches Patentamt • European Patent Office • Office européen des brevets

*) See note.

Note
This communication is issued by/for the department with whom responsibility lies. The Legal Division is responsible for the registration of transfers, changes of name (Articles 71, 72 and 74 EPC and Rules 22 and 85 EPC) as well as for the rectification of the designation of the inventor (Rule 21 EPC) (see Decision of the President of the EPO, OJ EPO 2013, 600). In all other cases, the Receiving Section, the Examining Division or the Opposition Division is responsible, depending on the stage in proceedings.

Amazon.com, Inc., Amazon.com Services LLC - Ex. 1017, Page 000175

Europäisches Patentamt
European Patent Office
Office européen des brevets

European Patent Office
80298 MUNICH
GERMANY

Questions about this communication ?
Contact Customer Services at www.epo.org/contact

LAINEMA, Jani
Kisakentänkatu 12 B 6
33230 Tampere
FINLANDE

Date
10.06.14

Reference	Application No./Patent No.
	12845839.5 - 1907 PCT/FI2012051070
Applicant/Proprietor	
Nokia Corporation	

Notification of the data mentioned in Rule 19(3) EPC

In the above-identified patent application you are designated as inventor/co-inventor.
Pursuant to Rule 19(3) EPC the following data are notified herewith:

DATE OF FILING	: 02.11.12
PRIORITY	: US/04.11.11/ USP201161555703
TITLE	: METHOD FOR VIDEO CODING AND AN APPARATUS
DESIGNATED STATES	: AL AT BE BG CH CY CZ DE DK EE ES FI FR GB GR HR HU IE IS IT LI LT LU LV MC MK MT NL NO PL PT RO RS SE SI SK SM TR

Receiving Section

Europäisches Patentamt • European Patent Office • Office européen des brevets

Amazon.com, Inc., Amazon.com Services LLC - Ex. 1017, Page 000176

Europäisches Patentamt
European Patent Office
Office européen des brevets

European Patent Office
80298 MUNICH
GERMANY

Questions about this communication ?
Contact Customer Services at www.epo.org/contact

BICI, Mehmet Oguz
Tammelan puistokatu 1-3 D 46
33500 Tampere
FINLANDE

Date
10.06.14

Reference	Application No./Patent No.
	12845839.5 - 1907 PCT/FI2012051070
Applicant/Proprietor	
Nokia Corporation	

Notification of the data mentioned in Rule 19(3) EPC

In the above-identified patent application you are designated as inventor/co-inventor.
Pursuant to Rule 19(3) EPC the following data are notified herewith:

DATE OF FILING	: 02.11.12
PRIORITY	: US/04.11.11/ USP201161555703
TITLE	: METHOD FOR VIDEO CODING AND AN APPARATUS
DESIGNATED STATES	: AL AT BE BG CH CY CZ DE DK EE ES FI FR GB GR HR HU IE IS IT LI LT LU LV MC MK MT NL NO PL PT RO RS SE SI SK SM TR

Receiving Section

Europäisches Patentamt • European Patent Office • Office européen des brevets

Amazon.com, Inc., Amazon.com Services LLC - Ex. 1017, Page 000177

Europäisches Patentamt
European Patent Office
Office européen des brevets

European Patent Office
80298 MUNICH
GERMANY

Questions about this communication ?
Contact Customer Services at www.epo.org/contact

UGUR, Kemal
Lapintie 6D 25
33100 Tampere
FINLANDE

Date
10.06.14

Reference	Application No./Patent No.
	12845839.5 - 1907 PCT/FI2012051070
Applicant/Proprietor	
Nokia Corporation	

Notification of the data mentioned in Rule 19(3) EPC

In the above-identified patent application you are designated as inventor/co-inventor.
Pursuant to Rule 19(3) EPC the following data are notified herewith:

DATE OF FILING	: 02.11.12
PRIORITY	: US/04.11.11/ USP201161555703
TITLE	: METHOD FOR VIDEO CODING AND AN APPARATUS
DESIGNATED STATES	: AL AT BE BG CH CY CZ DE DK EE ES FI FR GB GR HR HU IE IS IT LI LT LU LV MC MK MT NL NO PL PT RO RS SE SI SK SM TR

Receiving Section

Europäisches Patentamt • European Patent Office • Office européen des brevets

Amazon.com, Inc., Amazon.com Services LLC - Ex. 1017, Page 000178

Europäisches Patentamt
European Patent Office
Office européen des brevets

European Patent Office
80298 MUNICH
GERMANY

Questions about this communication ?
Contact Customer Services at www.epo.org/contact

Nokia Corporation
Intellectual Property Department
Karakaari 7
02610 Espoo
FINLANDE

Date
23.06.14

Reference	Application No./Patent No.
NC77198EP	12845839.5 - 1907 PCT/FI2012051070
Applicant/Proprietor	
Nokia Corporation	

Communication pursuant to Rules 161(2) and 162 EPC

1. Amendment of the application (R. 161(2) EPC)

The above-mentioned international (Euro-PCT) application has entered the European phase.

Under Articles 28, 41 PCT and Rules 52, 78 PCT the application may be amended before a designated or elected Office.

In accordance with Rule 161(2) EPC, you may amend your application once within a **non-extendable period of six months** after notification of the present communication.

If filing amendments, you must identify them and indicate the basis for them in the application as filed. Failure to meet either requirement may lead to a communication from the Examining Division requesting that you correct this deficiency (R. 137(4) EPC).

The claims applicable on expiry of this period, i.e. those filed on entry into the European phase or in response to the present communication, will form the basis for the calculation of any claims fee to be paid (see page 2).

--2/

Registered letter

Amazon.com, Inc., Amazon.com Services LLC - Ex. 1017, Page 000179

2 Claims fees under Rule 162 EPC

If the application documents on which the European grant procedure is to be based comprise more than fifteen claims, a claims fee shall be payable for the sixteenth and each subsequent claim within the period provided for in Rule 159(1) EPC.

☑ Based on the application documents currently on file, all necessary claims fees have already been paid (or the documents do not comprise more than 15 claims).

☐ All necessary fees will be/have been debited automatically according to the automatic debit order.

☐ The claims fees due for the claims ..... to ..... were not paid within the above-mentioned period.

Any outstanding claims fee, either based on the current set of claims or on any amended claims to be filed pursuant to Rule 161 EPC (see page 1), may still be validly paid within a **non-extendable period of six months** after notification of this communication (R. 162(2) EPC).

If a payment is made for only some of the claims, you must indicate for which claims it is intended. If a claims fee is not paid in due time, the claim concerned is deemed to be abandoned (R. 162(4) EPC).

If claims fees have already been paid, but on expiry of the above-mentioned period there is a new set of claims containing fewer fee-incurring claims than before, the claims fees in excess of those due under Rule 162(2), second sentence EPC will be refunded (R. 162(3) EPC).

You are reminded that the supplementary search carried out according to Article 153(7) EPC will relate only to the last set of claims applicable on expiry of the above period AND will be confined to those fee-incurring claims for which fees have been paid in due time.

The claims fee is currently

EUR 235 for the 16th and each subsequent claim up to the limit of 50
EUR 580 for the 51st and each subsequent claim

Note to users of the automatic debiting procedure
Unless the EPO receives prior instructions to the contrary, the fees for all claims incurring fees will be debited on the last day of the period for payment. For further details see the Arrangements for the automatic debiting procedure, Supplementary publication 4 - OJ EPO 2014.

Important information concerning fee amounts
Following any amendment to the Rules relating to Fees, the amount(s) mentioned in this communication may be different from the amount(s) **actually due on the date of payment.** The latest version of the Schedule of fees and expenses, published as a Supplement to the Official Journal of the EPO, is also available on the EPO website (**www.epo.org**) and can be found under **www.epo.org/schedule-of-fees**, which allows the viewing, downloading and searching for individual fee amounts, both current and previous.
Please note that procedural fees are usually adjusted every two years, on even years, with effect from 1 April.

Payments by cheque delivered or sent direct to the EPO are no longer accepted as from 1 April 2008 (see OJ EPO 2007, 626).

Amazon.com, Inc., Amazon.com Services LLC - Ex. 1017, Page 000180

Receiving Section

Amazon.com, Inc., Amazon.com Services LLC - Ex. 1017, Page 000181

Europäisches Patentamt
European Patent Office
Office européen des brevets

European Patent Office
80298 MUNICH
GERMANY

Questions about this communication ?
Contact Customer Services at www.epo.org/contact

Nokia Corporation
Intellectual Property Department
Karakaari 7
02610 Espoo
FINLANDE

Date
13.08.14

Reference	Application No./Patent No.
NC77198EP	12845839.5 - 1907 / 2774375 PCT/FI2012051070
Applicant/Proprietor	
Nokia Corporation	

Communication of European publication number and information on the application of Article 67(3) EPC

The provisional protection under Article 67(1) and (2) EPC in the individual Contracting States becomes effective only when the conditions referred to in Article 67(3) EPC have been fulfilled (for further details, see information brochure of the European Patent Office "National Law relating to the EPC" and additional information in the Official Journal of the European Patent Office).

Pursuant to Article 153(3) EPC the publication under Article 21 PCT of an international application for which the European Patent Office is a designated or elected Office takes the place of the publication of a European patent application.

The bibliographic data of the above-mentioned Euro-PCT application will be published on 10.09.14 in Section I.1 of the European Patent Bulletin. The European publication number is 2774375.

In all future communications to the European Patent Office, please quote the application number plus Directorate number.

Receiving Section

Europäisches Patentamt • European Patent Office • Office européen des brevets

Amazon.com, Inc., Amazon.com Services LLC - Ex. 1017, Page 000182

Europäisches Patentamt
European Patent Office
Office européen des brevets

European Patent Office
80298 MUNICH
GERMANY

Questions about this communication ?
Contact Customer Services at www.epo.org/contact

BICI, Mehmet Oguz
Tammelan puistokatu 1-3 D 46
33500 Tampere
FINLANDE

Date
10.06.14

Reference	Application No./Patent No.
	12845839.5 - 1907 PCT/FI2012051070
Applicant/Proprietor	
Nokia Corporation	

Notification of the data mentioned in Rule 19(3) EPC

In the above-identified patent application you are designated as inventor/co-inventor.
Pursuant to Rule 19(3) EPC the following data are notified herewith:

DATE OF FILING	: 02.11.12
PRIORITY	: US/04.11.11/ USP201161555703
TITLE	: METHOD FOR VIDEO CODING AND AN APPARATUS
DESIGNATED STATES	: AL AT BE BG CH CY CZ DE DK EE ES FI FR GB GR HR HU IE IS IT LI LT LU LV MC MK MT NL NO PL PT RO RS SE SI SK SM TR

Receiving Section

Europäisches Patentamt • European Patent Office • Office européen des brevets

Amazon.com, Inc., Amazon.com Services LLC - Ex. 1017, Page 000183

Europäisches Patentamt
European Patent Office
Office européen des brevets

PRIORITY
PRIORITAIRE

Port Betaald
Port Payé
Pays-Bas

postnl

Royal Mail
We were unable to deliver this item because
- [x] addressee gone away
- [ ] address incomplete
- [ ] address inaccessible
- [ ] addressee unknown
- [ ] refused
- [ ] not called for
- [ ] no such address

date 6/8 initials

P3960/97/302543

WAY

RETURN TO SENDER

EPA EPO OEB
tel: (070)3403060
11-09-2014
Mailroom N1

Osoiteselvitetty Itellassa 12.06.2014
Bici
Mehmet Oguz

54 Attenborough Court Owen
Square Watford Hertfordshire
Wd 19 4 En

UNITED KINGDOM

4.111

Amazon.com, Inc., Amazon.com Services LLC - Ex. 1017, Page 000184

Europäisches Patentamt
European Patent Office
Office européen des brevets

European Patent Office
80298 MUNICH
GERMANY

Questions about this communication ?
Contact Customer Services at www.epo.org/contact

Nokia Corporation
Intellectual Property Department
Karakaari 7
02610 Espoo
FINLANDE

Date
24.09.14

Reference	Application No./Patent No.
NC77198EP	12845839.5 - 1907 / 2774375 PCT/FI2012051070
Applicant/Proprietor	
Nokia Corporation	

Communication pursuant to Rule 19(1) EPC

The communication issued pursuant to Rule 19(3) EPC, sent to the inventor designated below, has been returned by the postal services.
You are requested to indicate the correct address of the inventor (R. 19(1) EPC).

Inventor : BICI, Mehmet Oguz
Tammelan puistokatu 1-3 D 46
FI / 33500 Tampere

Receiving Section

Europäisches Patentamt • European Patent Office • Office européen des brevets

Amazon.com, Inc., Amazon.com Services LLC - Ex. 1017, Page 000185

NOKIA

Intellectual Property Rights

16 June 2015

European Patent Office
Erhardtstrasse 27
D-80298 Munich
Germany

EPO - Munich
41
18. Juni 2015

Dear Sirs

We hereby request that the patent applications listed in the attached assignment be assigned from Nokia Corporation to

Nokia Technologies Oy
Karaportti 3
02610 Espoo
Finland

The fee for the transfer has been paid as a batch payment with the online payment tool.

Yours faithfully
Nokia Corporation, Intellectual Property Rights

Markku Kiviluoma
European Patent Attorney

Encl Copy of signed assignment

PATENT ASSIGNMENT

THIS Assignment is effective as of 31 December 2014 between

Assignor **NOKIA CORPORATION** of Karaportti 3, FI – 02610 Espoo, Finland, a corporation organized under the laws of Finland (hereinafter "Nokia Corporation") and Assignee **NOKIA TECHNOLOGIES OY** of Karaportti 3, FI – 02610 Espoo, Finland, a corporation organized under the laws of Finland (hereinafter "Nokia Technologies")

WHEREAS, Nokia Corporation is the owner of certain patents and patent applications, as more particularly described in Attachment 1 hereto (hereinafter "the Patents"), incorporated herein by reference;

NOW, THEREFORE, for good and valuable consideration, the receipt and sufficiency of which are hereby acknowledged and in accordance with that certain Business Purchase Agreement between Nokia Corporation and Nokia Technologies having an effective date of 31 December 2014 (hereinafter "Agreement"):

Nokia Corporation sells, assigns, transfers and conveys to Nokia Technologies, and its successors and assigns, all right, title, and interest in and to each of the Patents and patent applications listed in Attachment 1 hereto and all continuations, divisions, and reissues arising from or related to the Patents.

This sale, assignment, transfer, and conveyance to Nokia Technologies, and its successors and assigns, is made subject to certain retained rights in favor of Nokia Corporation for the Patents and patent applications listed in Attachment 1, as are set forth in the Agreement.

IN WITNESS WHEREOF, the parties have caused their respective corporate names to be affixed hereto and this instrument to be signed by their duly authorized officers as of the day and year written below.

NOKIA CORPORATION

By:
Name: Esa Niinimäki
Title: Authorized signatory
Date: 16 January 2015

Name: Anne Oksala
Title: Legal Counsel
Date: 16 January 2015

NOKIA TECHNOLOGIES OY

By:
Name: Jyri Lassi
Title: Vice President, Legal & IP
Date: 16 January 2015

Name: Sami Uskela
Title: Head of Finance and operations
Date: 16 January 2015

Attachment 1

Case reference	Filing Date	Filing Number
04168-EP-EPA	09 Jun 1999	99111181.6
04177-EP-EPA	04 Mar 2000	00104761.2
04216-EP-EPT	12 Nov 2002	02783372.2
04314-EP-EPA	11 Dec 2000	00311003.8
04326-EP-EPA	31 Jan 2001	01300868.5
04592-EP-EPT	03 Jun 2002	02733109.9
07201-EP-EPT	03 Jul 1996	96922056.5
07500-EP-EPT	25 Mar 1998	98910779.2
07540-EP-ETD	11 Nov 1997	04009648.9
07778-EP-EPA	20 May 1999	99660081.3
10794-EP-ETD	15 Sep 1997	05106241.2
10927-EP-EPT	13 Dec 2001	01271716.1
12409-EP-EPD	16 Sep 2004	04022067.5
12597-EP-EPA	16 Mar 1999	99660047.4
12714-EP-EPA	27 Oct 1998	98203624.6
12881-EP-EPD	16 Sep 2010	10075447.2
12992-EP-EPA	30 Nov 1998	98660129.2
13042-EP-ETD	04 Jan 2005	05100030.5
13175-EP-EPD	18 Feb 2008	08002918.4
13229-EP-EPA	10 Feb 1998	98300974.7
13281-EP-EPD	29 Jan 2007	07001826.2
13281-EP-EPD[2]	30 Oct 2008	08018938.4
14113-EP-ETD	30 Sep 2010	10184320.9
14232-EP-EPT	26 Mar 1999	99911835.9
14273-EP-ETD	12 Mar 2008	08152633.7
14321-EP-ETD	23 Sep 2004	04022633.4
14417-EP-ETD	05 Oct 1998	07106258.2
14440-EP-ETD	19 Jun 2008	08158552.3
14610-EP-ETD	10 Jun 2005	05012558.2
14665-EP-EPT	20 Sep 2000	00960724.3
14779-EP-ETD[2]	15 Jun 2010	10165938.1
14813-EP-EPT	02 Mar 2000	00907699.3
15074-EP-ETD[4]	31 Aug 2010	10174747.5
15074-EP-ETD[5]	31 Aug 2010	10174756.6
15074-EP-ETD[6]	31 Aug 2010	10174753.3
15172-EP-EPT	28 Jun 2001	01951748.1
15194-EP-EPT	22 May 2001	01938502.0
15273-EP-EPT	02 May 2001	01931747.8
15439-EP-ETD	13 Aug 2008	08162338.1
15547-EP-EPT	28 May 2001	01938276.1
15695-EP-ETD[1]	20 Dec 2001	06076819.9
15695-EP-ETD[2]	20 Dec 2001	06076820.7
15808-EP-EPT	22 Feb 2002	02727325.9
15962-EP-ETD	05 Aug 2009	09010127.0
16032-EP-EPT	12 Apr 2002	02714253.8
16050-EP-EPT	23 Dec 2002	02781701.4
16118-EP-ETD	20 May 2008	08156528.5
16199-EP-EPT	07 Oct 2002	02783353.2

(2)

16216-EP-EPT	19 Sep 2002	02800207.9
16296-EP-EPT	23 Aug 2002	02758726.0
16321-EP-EPT	10 Oct 2002	02801977.6
16321-EP-ETD	27 Dec 2012	12008633.5
16383-EP-EPT	25 Jan 2002	02714117.5
16509-EP-EPT	29 Jan 2002	02707054.9
16617-EP-EPT	24 Jan 2003	03702803.2
16697-EP-EPT	22 Feb 2002	02735717.7
16793-EP-EPT	30 Sep 2003	03751079.9
16886-EP-EPT	17 Dec 2003	03780442.4
16887-EP-EPT	20 Sep 2002	02808009.1
16908-EP-EPT	29 Apr 2003	03749966.2
16918-EP-EPT	19 Feb 2004	04712627.1
17206-EP-EPT	10 Oct 2001	01974579.3
17236-EP-EPT	20 Mar 2002	02718417.5
17407-EP-EPT	25 Jun 2002	02738494.0
17467-EP-EPT	17 Mar 2003	03726077.5
17476-EP-ETD	13 Nov 2014	14193113.9
17485-EP-EPT	01 Mar 2004	04715965.2
17497-EP-EPT	09 Dec 2003	03813250.2
17525-EP-EPT	03 Jan 2002	02716096.9
17542-EP-EPT	07 Mar 2002	02703799.3
17542-EP-ETD	07 Mar 2002	04001066.2
17572-EP-EPT	09 Sep 2002	02759596.6
17577-EP-ETD[2]	03 Oct 2008	08165862.7
17594-EP-EPT	02 Dec 2002	02794094.9
17595-EP-EPT	22 Jan 2003	03700323.3
17604-EP-EPT	23 Apr 2003	03747183.6
17605-EP-EPT	14 Mar 2003	03744467.6
17612-EP-ETD	16 Jun 2008	08158310.6
17612-EP-ETD[2]	16 Jun 2008	08158312.2
17630-EP-EPT	09 Jul 2003	03762835.1
17671-EP-EPT	07 May 2004	04820345.9
17722-EP-EPT	03 Mar 2005	05708663.9
17826-EP-EPT	15 Jun 2006	06779723.3
17847-EP-EPT	02 Apr 2007	07734158.4
17875-EP-EPT	26 Sep 2006	06808896.2
17879-EP-EPT	20 Oct 2006	06809093.5
17927-EP-EPT	15 Sep 2005	05796394.4
17928-EP-EPT	15 Sep 2005	05798064.1
18070-EP-EPT	23 Aug 2000	00951785.5
18214-EP-ETD	09 Jul 2009	09008988.9
18273-EP-ETD[2]	30 Sep 2010	10184472.8
18273-EP-ETD[3]	30 Sep 2010	10184525.3
18356-EP-EPA	12 Jun 2000	00112478.3
18407-EP-EPT	21 Dec 2000	00987551.9
18464-EP-EPT	16 Dec 2002	02788366.9
18550-EP-ETD	11 Jan 2001	06123751.7
18563-EP-EPD	13 Dec 2006	06126021.2
18563-EP-EPD[2]	27 Sep 2007	07117371.0
18581-EP-ETD	18 Sep 2003	03021078.5

18696-EP-EPT	08 May 2001	01931769.2
18720-EP-ETD	20 Apr 2010	10160495.7
18720-EP-ETD[2]	20 Apr 2010	10160497.3
18746-EP-ETD	15 Aug 2001	05024336.9
18746-EP-ETD[2]	21 Jun 2011	11170659.4
18748-EP-EPA	11 Jul 2001	01660140.3
18761-EP-ETD	04 Oct 2010	10186378.5
18909-EP-EPT	10 May 2002	02730559.8
18962-EP-EPT	30 Sep 2002	02772657.9
19025-EP-EPT	15 Nov 2001	01983624.6
19055-EP-EPA	19 Mar 2002	02396035.4
19157-EP-EPT	11 Nov 2002	02781485.4
19162-EP-EPT	09 Oct 2001	01976329.1
19163-EP-ETD	23 Jun 2009	09163501.1
19166-EP-EPT	05 Mar 2002	02702433.0
19173-EP-ETD	04 Feb 2011	11153459.0
19183-EP-EPT	13 Sep 2002	02798016.8
19227-EP-ETD	27 Sep 2007	07117391.8
19228-EP-EPT	13 Dec 2002	02781646.1
19269-EP-ETD	26 Mar 2010	10157960.5
19276-EP-EPT	25 Jun 2002	02740985.3
19315-EP-EPT	20 Nov 2002	02805355.1
19359-EP-ETD	10 Jan 2008	08100326.1
19377-EP-EPT	18 Nov 2002	02803489.0
19413-EP-EPA	31 Jan 2003	03100209.0
19436-EP-EPT	20 Jun 2003	03735876.9
19478-EP-EPT	15 Nov 2002	02803487.4
19487-EP-ETD	11 Aug 2009	09167630.4
19491-EP-ETD	29 Dec 2006	06127350.4
19613-EP-EPT	05 Mar 2004	04717653.2
19640-EP-EPT	13 Feb 2003	03743937.9
19770-EP-EPT	07 Mar 2003	03816140.2
19791-EP-ETD	18 Apr 2008	08075310.6
19847-EP-EPT	13 Aug 2002	02748908.7
19924-EP-EPT	27 Oct 2003	03751207.6
19943-EP-EPT	25 Nov 2002	02781609.9
23320-EP-EPD	14 Feb 2008	08151417.6
23566-EP-EPT	23 Dec 2000	00991266.8
23778-EP-EPT	25 Jun 2002	02738516.0
23929-EP-EPT	12 May 2004	04732363.9
24052-EP-EPT	21 Jan 1999	99900898.0
24110-EP-ETD[2]	20 May 2014	14168972.9
24175-EP-EPA	25 May 1999	99660088.8
24233-EP-EPD	06 Jun 2003	03012881.3
24254-EP-EPD	06 Aug 2007	07015349.9
24475-EP-EPD	31 Oct 2008	08168060.5
24562-EP-EPA	21 Feb 2000	00301342.2
24563-EP-EPD	23 Jul 2007	07075624.2
24645-EP-EPA	02 Oct 2000	00121574.8
24648-EP-EPT	25 May 2001	01929931.2
24784-EP-EPA	07 Dec 2000	00660222.1

24939-EP-ETD	17 Feb 2009	09153018.8
25398-EP-EPT	22 Jun 2001	01955321.3
26057-EP-EPT	16 Nov 2000	00979694.7
26057-EP-ETD	23 Feb 2006	06110326.3
26187-EP-EPT	18 Sep 2001	01967586.7
26191-EP-EPT	21 Dec 2001	01985938.8
27009-EP-ETD	10 Nov 2006	06123862.2
27310-EP-EPA	05 Jul 2000	00660125.6
27311-EP-EPA	05 Jul 2000	00660124.9
27311-EP-EPD	30 Sep 2010	10184451.2
27337-EP-EPA	18 Dec 2000	00660234.6
27414-EP-EPA	19 Dec 2001	01660239.3
28020-EP-ETD	18 Aug 2004	04077331.9
28088-EP-EPT	14 Jun 2001	01936743.2
28124-EP-EPD	15 Apr 2005	05102985.8
28129-EP-EPT	21 May 2001	01934225.2
28129-EP-ETD	30 Sep 2010	10184441.3
28287-EP-ETD	30 Mar 2007	07105391.2
28309-EP-EPT	27 Nov 2001	01999083.7
28392-EP-EPT	18 Jul 2001	01957981.2
28392-EP-ETD	18 Jul 2001	07004315.3
28447-EP-EPT	07 May 2002	02726363.1
28460-EP-EPT	01 Aug 2002	02755406.2
28473-EP-ETD	09 Jun 2008	08010464.9
28513-EP-EPT	30 Sep 2002	02775040.5
28513-EP-ETD	30 Sep 2010	10184780.4
28527-EP-ETD	01 Oct 2010	10185523.7
28553-EP-EPA	18 Dec 2002	02445181.7
28557-EP-EPT	31 Jan 2003	03702826.3
28559-EP-EPT	11 Mar 2003	03744931.1
28617-EP-EPT	16 Jun 2003	03760098.8
28621-EP-EPT	26 Mar 2003	03746374.2
28659-EP-EPT	27 Mar 2003	03712170.4
28673-EP-EPT	20 Jun 2003	03761739.6
28695-EP-ETD	17 Jun 2010	10166418.3
28696-EP-EPT	16 Dec 2004	04806367.1
28704-EP-EPT	27 Nov 2003	03772570.2
28717-EP-EPT	27 Oct 2004	04794208.1
28746-EP-EPT	24 Jun 2004	04743810.6
28759-EP-EPT	21 Oct 2003	03758385.3
28783-EP-EPT	20 Dec 2004	04806391.1
28786-EP-ETD	13 Mar 2006	06111009.4
28815-EP-EPA	18 Jun 2004	04102807.7
28849-EP-EPT	10 Nov 2004	04798827.4
28851-EP-EPT	21 Nov 2003	03775421.5
28888-EP-EPT	23 Sep 2004	04770065.3
28897-EP-EPA	10 Sep 2004	04104392.8
28929-EP-EPT	18 Feb 2005	05702524.9
28930-EP-EPT	22 Nov 2005	05857019.3
28971-EP-EPA	08 Nov 2004	04026446.7
28978-EP-EPT	06 Dec 2004	04801316.3

(5)

29426-EP-EPT	25 Apr 2000	00927040.6
29503-EP-EPA	14 May 2001	01111642.3
29522-EP-EPA	09 Mar 2001	01302183.7
29558-EP-EPT	19 Sep 2002	02774632.0
29709-EP-EPT	02 Jul 2001	01960758.9
29709-EP-ETD	30 Sep 2010	10184119.5
29709-EP-ETD[2]	30 Sep 2010	10184418.1
29743-EP-EPD	04 Jul 2008	08159680.1
29782-EP-EPT	23 Aug 2001	01966093.5
29914-EP-EPA	20 Dec 2001	01000775.5
30500-EP-EPT	18 Jun 2001	01946472.6
30508-EP-EPD	25 Oct 2007	07020932.5
30610-EP-EPT	09 Oct 2003	03751099.7
30615-EP-EPT	26 Aug 2002	02753544.2
30620-EP-EPT	14 Nov 2002	02803222.5
30623-EP-EPT	19 Nov 2003	03772472.1
30656-EP-EPT	22 Sep 2004	04787525.7
30658-EP-EPT	12 Oct 2004	04769606.7
31007-EP-EPT	22 Dec 2005	05850708.8
31591-EP-EPD	05 Jul 2011	11005465.7
31687-EP-EPT	14 Jun 2006	06779716.7
31696-EP-EPT	24 Jun 2005	05766243.9
32017-EP-ETD	24 Jan 2008	08001322.0
32112-EP-EPT	08 May 2002	02727847.2
32153-EP-EPT	23 Jul 2002	02749226.3
32222-EP-ETD	19 Jan 2010	10151117.8
32290-EP-ETD	25 Aug 2009	09010864.8
32544-EP-EPD[2]	29 May 2008	08157221.6
32546-EP-EPD	11 Apr 2007	07007426.5
32547-EP-EPT	03 Oct 2001	01972385.7
32568-EP-ETD	11 Jul 2007	07112217.0
32693-EP-EPT	04 Dec 2002	02785816.6
32734-EP-EPA	25 Feb 2002	02396023.0
32767-EP-EPT	12 Apr 2002	02714248.8
32771-EP-ETD	14 Apr 2008	08103525.5
32827-EP-EPD	12 Oct 2007	07117642.4
32834-EP-EPT	25 Mar 2002	02706812.1
32930-EP-EPT	13 Mar 2002	02707035.8
32982-EP-EPT	24 Apr 2002	02716869.9
33015-EP-EPT	19 Apr 2002	02722584.6
33158-EP-EPT	13 Feb 2003	03743938.7
33237-EP-EPA	23 Sep 2002	02256584.0
33276-EP-EPA	30 Oct 2002	02257540.1
33278-EP-EPT	17 Jan 2003	03700123.7
33355-EP-EPT	05 Dec 2002	02787912.1
33359-EP-EPA	25 Nov 2002	02026156.6
33439-EP-EPT	14 Nov 2002	02777349.8
33606-EP-EPA	20 Jun 2002	02254332.6
33623-EP-EPD[1]	15 Jan 2007	07075037.7
33658-EP-EPA	02 Aug 2002	02255430.7
33658-EP-EPD	08 Jul 2010	10168938.8

(6)

33718-EP-EPT	16 Dec 2002	02788370.1
33803-EP-EPT	03 Mar 2004	04716618.6
33843-EP-EPT[2]	18 Oct 2004	04791563.2
33855-EP-EPT	16 Dec 2004	04801419.5
33867-EP-EPT	23 Dec 2004	04804335.0
33873-EP-EPT	27 Jun 2005	05757038.4
34124-EP-EPT	07 Jun 2002	02726393.8
34127-EP-EPT	07 Jun 2002	02735756.5
34128-EP-EPT	07 Jun 2002	02735757.3
34576-EP-EPT	10 Dec 2003	03796921.9
34673-EP-EPT	18 Aug 2004	04781666.5
34673-EP-ETD	28 Mar 2012	12161846.6
34757-EP-ETD	31 May 2013	13170029.6
34797-EP-EPT	01 Aug 2005	05772028.6
34813-EP-EPT	17 Nov 2005	05802246.8
34869-EP-EPT	03 Feb 2006	06710314.3
34916-EP-EPT	14 Nov 2003	03775597.2
34963-EP-EPT	16 Mar 2004	04720934.1
34988-EP-EPT	20 Aug 2004	04809607.7
35019-EP-EPA	06 Mar 2003	03396017.0
35147-EP-EPA	26 Sep 2002	02256702.8
35273-EP-EPT	22 Jan 2003	03700321.7
35273-EP-ETD	30 Jan 2006	06101013.8
35288-EP-EPT	28 Oct 2003	03758173.3
35453-EP-EPT	21 Mar 2003	03712163.9
35592-EP-EPT	26 Mar 2003	03708398.7
35601-EP-EPT	17 May 2002	02732999.4
35634-EP-EPT	28 Aug 2002	02765164.5
35659-EP-EPT	22 Oct 2003	03758159.2
35693-EP-EPT	29 Apr 2003	03718990.9
35718-EP-EPT	15 Oct 2003	03753838.6
35751-EP-EPT	17 Sep 2003	03798281.6
35853-EP-EPT	10 Oct 2003	03769522.8
35906-EP-EPT	16 Jul 2003	03764749.2
35910-EP-EPT	03 Sep 2003	03793961.8
35910-EP-ETD	11 Jul 2008	08104710.2
35949-EP-EPT	15 Jul 2003	03740897.8
35966-EP-ETD	25 Aug 2010	10173955.5
36047-EP-EPT	03 Feb 2003	03815713.7
36054-EP-EPT	25 Jan 2005	05708517.7
36145-EP-EPA	12 Feb 2004	04100523.2
36166-EP-EPT	21 Nov 2002	02785725.9
36197-EP-EPT	15 Mar 2004	04720672.7
36248-EP-EPT	12 Apr 2004	04726880.0
36265-EP-ETD	28 Mar 2012	12161870.6
36315-EP-EPT	15 Jun 2004	04736851.9
36325-EP-EPT	23 Jan 2004	04704682.6
36366-EP-EPA	04 Jun 2004	04102546.1
36407-EP-ETD	08 Sep 2010	10175703.7
36570-EP-EPT	12 Aug 2004	04744244.7
36677-EP-EPT	17 May 2004	04733399.2

36695-EP-EPT	06 Jun 2003	03730262.7
36714-EP-EPT	13 Aug 2004	04744280.1
36748-EP-EPT	06 Oct 2004	04769564.8
36762-EP-ETD	07 Dec 2011	11192343.9
36813-EP-ETD	12 Aug 2004	07007608.8
36816-EP-EPT	06 Oct 2004	04769582.0
36817-EP-EPT	06 Oct 2004	04769573.9
36891-EP-EPT	30 Aug 2004	04769240.5
36922-EP-EPT	29 Dec 2004	04805201.3
36961-EP-EPT	10 Dec 2004	04805215.3
37000-EP-ETD	29 May 2007	07109135.9
37078-EP-EPT	02 Feb 2005	05708148.1
37177-EP-EPT	13 Jul 2004	04742192.0
37280-EP-EPT	05 Oct 2004	04769553.1
37291-EP-EPT	06 Aug 2004	04780263.2
37335-EP-EPT	07 Oct 2004	04769587.9
37351-EP-EPT	22 Jun 2005	05756280.3
37379-EP-EPT	20 Jan 2005	05708127.5
37449-EP-EPT	06 Sep 2004	04769295.9
37515-EP-EPT	21 Nov 2005	05812730.9
37524-EP-EPT	14 Oct 2005	05799266.1
37575-EP-EPA[2]	10 Jan 2006	06100206.9
37602-EP-EPT	01 Mar 2006	06744429.9
37648-EP-EPT	08 Sep 2006	06778567.5
37692-EP-EPT	04 Nov 2005	05806493.2
37707-EP-EPT	02 Jun 2006	06765444.2
37719-EP-EPT	22 Jun 2006	06779755.5
37801-EP-EPT	07 Jun 2006	06779702.7
37836-EP-EPT	26 Mar 2007	07734095.8
39016-EP-EPT	27 Jun 2003	03761831.1
39136-EP-EPT	02 Sep 2003	03753835.2
39191-EP-EPA	10 Mar 2005	05251468.4
39197-EP-EPT	29 Apr 2004	04730339.1
39612-EP-EPT	10 Nov 2003	03811044.1
39614-EP-EPT	01 Oct 2002	02807884.8
39615-EP-EPT	26 Sep 2003	03807921.6
39628-EP-EPT	03 Oct 2003	03807942.2
39680-EP-EPT	05 Nov 2003	03810555.7
39743-EP-EPT	22 Jan 2004	04704296.5
39771-EP-ETD	29 Sep 2010	10182330.0
39779-EP-EPT	11 May 2004	04732151.8
39780-EP-EPT	10 Feb 2004	04709667.2
39780-EP-ETD	21 Sep 2010	10177782.9
39822-EP-EPA	04 Oct 2004	04256120.9
39831-EP-EPT	03 Sep 2004	04767028.6
39883-EP-EPT	23 Mar 2004	04722601.4
39915-EP-EPT	17 Dec 2003	03778638.1
39951-EP-EPT	12 May 2004	04732356.3
39968-EP-EPT	05 Oct 2004	04767101.1
39979-EP-ETD	26 Feb 2009	09153756.3
40048-EP-EPA[2]	15 Dec 2004	04029666.7

(8)

40074-EP-EPT	03 Jan 2005	05702178.4
40074-EP-ETD	16 Sep 2010	10177108.7
40089-EP-EPT	24 Nov 2004	04798957.9
40112-EP-EPT	21 Oct 2004	04791769.5
40118-EP-EPT	20 Oct 2004	04791724.0
40127-EP-EPT	24 Nov 2004	04798959.5
40167-EP-EPT	18 Jan 2005	05708121.8
40218-EP-EPT	15 Aug 2005	05772316.5
40225-EP-EPT	24 Jun 2005	05759785.8
40228-EP-EPT	05 Jan 2005	05702177.6
40240-EP-EPT	28 Jun 2005	05758610.9
40301-EP-EPT	14 Feb 2005	05702498.6
40307-EP-EPT	15 Jun 2005	05754146.8
40314-EP-EPT	15 Apr 2005	05735313.8
40371-EP-EPT	04 Jan 2006	06700058.8
40372-EP-EPT	11 May 2005	05739664.0
40382-EP-EPT	11 May 2005	05737840.8
40439-EP-ETD[2]	10 Oct 2012	12187913.4
40445-EP-EPT	28 Apr 2005	05746233.5
40458-EP-EPT	04 Jan 2006	06700271.7
40480-EP-EPT	01 Jun 2005	05780158.1
40512-EP-EPT	09 Aug 2005	05773089.7
40517-EP-EPT	02 Jun 2005	05747080.9
40520-EP-EPT	27 Sep 2005	05790895.6
40525-EP-EPT	16 Nov 2005	05801741.9
40528-EP-EPT	01 Dec 2005	05818071.2
40533-EP-EPT	28 Apr 2006	06744587.4
40536-EP-EPT	14 Feb 2006	06708909.4
40568-EP-EPT	21 Jul 2005	05779838.1
40678-EP-EPT	07 Apr 2005	05718386.5
40684-EP-EPT	16 Feb 2006	06727307.8
40732-EP-EPT	12 Dec 2005	05813983.3
40759-EP-EPT	20 Oct 2005	05796815.8
40826-EP-EPT	18 May 2006	06744769.8
40940-EP-EPT	11 May 2006	06743546.1
40953-EP-EPT	04 Aug 2006	06780317.1
40996-EP-EPT	25 Apr 2006	06744559.3
41001-EP-EPT	10 Nov 2005	05807901.3
41020-EP-EPT	29 Jun 2006	06765605.8
41039-EP-EPT	17 Jan 2006	06701199.9
41062-EP-EPT	27 Apr 2006	06795052.7
41081-EP-EPT	07 Sep 2006	06778565.9
41083-EP-ETD	02 Aug 2011	11176334.8
41136-EP-EPT	31 Jan 2006	06710601.3
41155-EP-EPT	05 Jun 2006	06755408.9
41157-EP-EPT	11 Jan 2006	06710229.3
41186-EP-EPT	10 Apr 2006	06725871.5
41189-EP-EPT	28 Feb 2006	06727266.6
41307-EP-EPT	28 Apr 2006	06755844.5
41319-EP-EPT	31 May 2006	06765439.2
41415-EP-EPT	30 Oct 2007	07822028.2

41418-EP-EPT	06 Dec 2006	06847270.3
41437-EP-EPT	13 Sep 2006	06808840.0
41457-EP-EPT	31 Jan 2007	07705751.1
41486-EP-EPT	26 Mar 2007	07730542.3
41496-EP-EPT	26 Sep 2006	06794125.2
41522-EP-EPT	01 Sep 2006	06795413.1
41523-EP-EPT	06 Sep 2006	06795440.4
41561-EP-EPT	18 Aug 2006	06795523.7
41569-EP-EPT	12 Oct 2006	06809107.3
41572-EP-EPT	03 Apr 2007	07735367.0
41580-EP-EPT	20 Jun 2007	07789737.9
41650-EP-EPT	30 Mar 2006	06765430.1
41678-EP-EPT	24 Sep 2007	07825167.5
41708-EP-EPT	07 Jun 2006	06744822.5
41714-EP-EPT	19 Jan 2007	07705445.0
41749-EP-EPT	31 Jan 2007	07705506.9
41756-EP-EPT	21 Feb 2007	07705658.8
41763-EP-EPT	13 Mar 2007	07712604.3
41796-EP-EPT	16 May 2007	07730602.5
41818-EP-EPT	19 Mar 2007	07730635.5
41887-EP-EPT	13 Jul 2007	07805149.7
41899-EP-EPT	01 May 2007	07734444.8
41902-EP-EPT	28 Mar 2007	07734184.0
41904-EP-EPT	26 Mar 2007	07734149.3
41908-EP-EPT	25 Jun 2007	07734965.2
41926-EP-EPT	20 Jun 2007	07789758.5
41942-EP-EPT	13 Mar 2007	07735091.6
41952-EP-ETD	13 Apr 2012	12164182.3
41967-EP-EPT	17 Dec 2007	07859083.3
42011B-EP-EPT	15 Dec 2003	03779739.6
42020-EP-EPT	15 Dec 2003	03779737.0
42204-EP-EPT(1)	31 Mar 2004	04724660.8
42210-EP-EPD	29 Oct 2014	14190963.0
42217-EP-EPT	14 Feb 2004	04711313.9
42269-EP-EPT	31 Aug 2005	05778167.6
42344-EP-ETD	05 Oct 2012	12187524.9
42350-EP-EPT	29 Sep 2005	05791708.0
42368-EP-EPT	28 Mar 2007	07734120.4
42417-EP-EPT	30 Dec 2004	04815830.7
42496-EP-ETD	15 Feb 2010	10001515.5
42581-EP-EPT	19 Feb 2004	04712506.7
42733-EP-EPT	08 Dec 2003	03819111.0
42774-EP-EPD	03 Oct 2014	14187597.1
42777-EP-EPT	10 Jul 2004	04744157.1
42838-EP-EPT	04 Mar 2005	05708662.1
43007-EP-EPT	24 Jun 2004	04742257.1
43008-EP-EPT	17 Feb 2004	04711624.9
43016-EP-EPT	25 Feb 2005	05708650.6
43139-EP-EPT	31 Jan 2005	05702396.2
43143-EP-EPT	24 Nov 2004	04820080.2
43178-EP-EPT	03 Mar 2005	05708671.2

(10) + (μ)

43226-EP-EPT	17 Feb 2005	05702512.4
43240-EP-EPT	11 Mar 2005	05708726.4
43317-EP-EPT	11 May 2005	05739663.2
43338-EP-EPT	07 Nov 2003	03769752.1
43371-EP-EPT	21 Dec 2004	04805180.9
43488-EP-EPT	13 Feb 2004	04710941.8
43521-EP-EPT	13 Aug 2004	04744274.4
43537-EP-EPA	28 Jun 2004	04102988.5
43600-EP-EPT	10 Jun 2005	05751989.4
43609-EP-EPT	14 Jun 2005	05750731.1
43635-EP-ETD	20 May 2014	14169090.9
43689-EP-EPT	18 Mar 2005	05717350.2
43718-EP-EPT	24 Nov 2004	04818844.5
43750-EP-EPT	30 Sep 2005	05794620.4
43774-EP-EPT	03 Mar 2005	05708675.3
43790-EP-EPT	01 Mar 2005	05708635.7
43827-EP-EPT	17 Jan 2005	05701740.2
43874-EP-EPT	15 Mar 2005	05708748.8
43930-EP-EPT	04 May 2005	05737532.1
43933-EP-EPT	15 Dec 2004	04806355.6
43939-EP-EPT	21 Jul 2005	05772029.4
44000-EP-EPT	22 Feb 2005	05717297.5
44005-EP-EPT	19 May 2005	05740645.6
44021-EP-EPT	24 Jun 2005	05754701.0
44032-EP-EPT	17 May 2005	05742183.6
44052-EP-EPT	15 Apr 2005	05732310.7
44101-EP-EPT	10 Aug 2005	05780824.8
44116-EP-ETD	29 Sep 2010	10182763.2
44156-EP-EPT	13 Feb 2004	04710938.4
44180-EP-EPT	15 Feb 2005	05708201.8
44183-EP-EPD	07 Apr 2014	14163654.8
44211-EP-EPT	21 Mar 2005	05718219.8
44336-EP-EPT	21 Feb 2006	06710422.4
44550-EP-EPT	01 Dec 2005	05818068.8
44577-EP-EPT	02 May 2005	05737835.8
44610-EP-EPT	06 Sep 2005	05779749.0
44673-EP-EPT	02 Jan 2006	06700219.6
44677-EP-EPT	31 Aug 2005	05778009.0
44684-EP-EPT	03 May 2005	05737952.1
44695-EP-EPT	30 Dec 2004	04805205.4
44746-EP-EPT	13 Jan 2006	06701112.2
44748-EP-EPT	22 Dec 2005	05818842.6
44807-EP-EPT	22 Jun 2005	05756282.9
44811-EP-EPD	15 Oct 2013	13188745.7
44811-EP-EPT	27 Jun 2007	07804538.2
44845-EP-EPT	05 Jan 2006	06700069.5
44878-EP-EPT	23 Sep 2005	05794414.2
44966-EP-EPT	25 Nov 2005	05803849.8
44989-EP-EPT	19 Aug 2005	05775962.3
45013-EP-EPT	07 Mar 2005	05708685.2
45018-EP-EPT	22 Nov 2004	04798934.8

(12)

45052-EP-ETD	10 Oct 2014	14188452.8
45062-EP-EPD	04 Jun 2007	07010983.0
45075-EP-EPT	24 Jan 2005	05702339.2
45078-EP-EPT	17 Jun 2005	05759410.3
45087-EP-EPT	16 Jun 2005	05756714.1
45089-EP-EPT	03 May 2005	05740444.4
45094-EP-EPT	24 Jan 2005	05702343.4
45108-EP-EPT	16 Sep 2005	05789223.4
45117-EP-EPT	01 Jun 2005	05745141.1
45170-EP-EPT	25 Mar 2004	04723269.9
45171-EP-EPT	15 Jun 2005	05750865.7
45207-EP-EPT	02 Aug 2005	05771413.1
45211-EP-EPT	24 Jun 2005	05759809.6
45244-EP-EPT	17 Jun 2005	05759398.0
45247-EP-ETD	27 Jun 2013	13174145.6
45284-EP-EPT	21 Dec 2005	05822867.7
45293-EP-EPD	17 Oct 2011	11185504.5
45295-EP-EPT	04 Aug 2005	05779867.0
45317-EP-EPT	16 Sep 2005	05789453.7
45400-EP-EPT	14 Mar 2006	06727315.1
45402-EP-EPT	07 Jun 2005	05744306.1
45411-EP-EPT	02 Feb 2006	06755816.3
45424-EP-EPT	26 Aug 2005	05785797.1
45450-EP-EPT	21 Nov 2005	05806567.3
45459-EP-EPT	16 Feb 2006	06710390.3
45469-EP-EPT	01 Mar 2006	06727308.6
45501-EP-EPT	27 Apr 2006	06744695.5
45507-EP-EPT	07 Mar 2005	05718190.1
45535-EP-EPT	22 Mar 2006	06744447.1
45540-EP-EPT	23 Mar 2006	06710584.1
45541-EP-EPT	30 Mar 2006	06744459.6
45557-EP-EPT	23 May 2006	06744752.4
45579-EP-EPT	02 Oct 2006	06808915.0
45593-EP-EPT	25 Jul 2005	05768658.6
45612-EP-EPT	04 May 2006	06744649.2
45615-EP-EPT	20 Jul 2006	06755975.7
45618-EP-EPT	05 Oct 2006	06808957.2
45630-EP-EPT	15 Dec 2005	05820499.1
45631-EP-EPT	24 Nov 2005	05808113.4
45638-EP-EPT	03 Jan 2007	07700004.0
45647-EP-EPT	27 Oct 2006	06809136.2
45652-EP-EPT	15 Feb 2007	07733890.3
45672-EP-EPT	19 Dec 2006	06831769.2
46028-EP-EPT	14 Oct 2005	05818855.8
46031-EP-EPT	28 Jul 2005	05770923.0
46040-EP-EPT	13 Apr 2006	06727550.3
46043-EP-EPT	15 Oct 2007	07821317.0
46100-EP-EPT	01 Apr 2005	05718332.9
46126-EP-EPT	18 Jul 2005	05761505.6
46187-EP-EPT	06 Apr 2006	06744479.4
46495-EP-EPT	11 May 2007	07734542.9

13

46512-EP-EPT	04 Jul 2006	06778515.4
46515-EP-EPT	19 Dec 2005	05821517.9
46529-EP-EPT	22 Dec 2005	05823766.0
46551-EP-EPT	10 May 2005	05780100.3
46583-EP-EPT	21 Dec 2007	07858371.3
46584-EP-EPT	08 Feb 2006	06710338.2
46592-EP-EPT	11 Apr 2006	06725913.5
46629-EP-EPT	09 Feb 2006	06710347.3
46641-EP-EPT	26 Apr 2006	06744575.9
46658-EP-EPT	30 Mar 2006	06727392.0
46661-EP-EPT	30 Jun 2006	06795069.1
46675-EP-EPT	03 May 2006	06744647.6
46703-EP-EPT	22 May 2007	07735989.1
46718-EP-EPT	14 Aug 2006	06795248.1
46719-EP-EPT	26 May 2006	06765435.0
46731-EP-EPT	19 Dec 2007	07858360.6
46740-EP-EPT	18 Aug 2006	06795281.2
46745-EP-EPT	04 Aug 2006	06779933.8
46748-EP-EPT	16 Mar 2007	07712622.5
46757-EP-EPT	07 Apr 2005	05736290.7
46774-EP-EPT	22 Aug 2006	06779970.0
46783-EP-EPT	18 May 2007	07734642.7
46784-EP-EPT	22 Aug 2006	06795308.3
46791-EP-EPT	01 Nov 2006	06809162.8
46811-EP-EPT	06 Oct 2006	06808972.1
46813-EP-EPT	27 Sep 2006	06795563.3
46829-EP-EPT	03 Apr 2007	07730673.6
46830-EP-EPT	04 Oct 2006	06820775.2
46836-EP-EPT	28 Sep 2006	06808906.9
46853-EP-EPT	02 Nov 2006	06809177.6
46858-EP-EPT	05 Jan 2007	07700453.9
46862-EP-EPT	27 Oct 2006	06820827.1
46863-EP-EPT	30 Oct 2006	06820832.1
46868-EP-EPT	02 Nov 2006	06809174.3
46889-EP-EPT	25 Apr 2007	07730709.8
46901-EP-EPT	01 Feb 2007	07705517.6
46907-EP-EPT	01 Feb 2007	07705514.3
46910-EP-EPT	12 Jan 2007	07700483.6
46920-EP-EPT	05 Nov 2007	07823230.3
46935-EP-EPT	08 Feb 2007	07705597.8
46937-EP-EPT	26 Jun 2007	07788761.0
46938-EP-EPT	09 Jan 2007	07700470.3
46948-EP-EPT	07 Feb 2007	07705555.6
46958-EP-EPT[2]	10 Jan 2007	07700275.6
46968-EP-EPT	18 Jan 2007	07700502.3
46978-EP-EPT	06 Jul 2007	07788795.8
47042-EP-EPT	27 Apr 2006	06744577.5
47100-EP-EPT	03 Jan 2005	05702172.7
47194-EP-EPT	01 Mar 2006	06708989.6
47280-EP-EPT	18 Apr 2006	06744515.5
47447-EP-EPT	09 May 2006	06744670.8

47502-EP-ETD	29 Jan 2009	09001255.0
47502-EP-ETD[1]	28 Sep 2010	10181009.1
47533-EP-EPT	11 Aug 2005	05783086.1
47544-EP-EPT	08 Nov 2004	04798440.6
47580-EP-EPT	24 Oct 2005	05797754.8
47580-EP-ETD	21 Sep 2010	10075471.2
47587-EP-ETD	13 Oct 2014	14188701.8
47636-EP-EPT	05 May 2006	06744655.9
47637-EP-EPT	05 May 2006	06755859.3
47660-EP-EPT	12 Jun 2006	06808977.0
47673-EP-EPT	03 Aug 2006	06780293.4
47677-EP-EPT	24 May 2006	06842394.6
47699-EP-EPT	14 Jun 2006	06755952.6
47700-EP-EPT	14 Sep 2006	06795494.1
47704-EP-EPT	16 Dec 2005	05818540.6
47707-EP-EPT	08 Dec 2006	06847271.1
47733-EP-EPT	16 Nov 2006	06820906.3
47745-EP-EPT	18 Sep 2006	06808924.2
47775-EP-EPT	20 Apr 2007	07734361.4
47780-EP-EPT	23 Mar 2006	06709014.2
48015-EP-EPT	29 Dec 2005	05822091.4
48096-EP-EPT	29 Aug 2005	05786346.6
48148-EP-EPT	03 Mar 2006	06708994.6
48154-EP-EPT	25 Jan 2006	06704653.2
48208-EP-EPT	01 Mar 2005	05708632.4
48240-EP-EPT	11 Jul 2006	06795098.0
48259-EP-EPT	15 Feb 2006	06727249.2
48290-EP-EPT	27 Jan 2006	06755815.5
48389-EP-EPT	24 Apr 2007	07734388.7
48411-EP-ETD	27 Jun 2013	13173967.4
48438-EP-ETD	16 Apr 2013	13163885.0
48454-EP-EPT	05 Jan 2006	06700070.3
48463-EP-EPT	02 Jun 2006	06765447.5
48481-EP-EPT	11 May 2006	06743545.3
48482-EP-EPT	22 Dec 2005	05826040.7
48505-EP-EPT	27 Dec 2005	05825293.3
48569-EP-EPT	09 Mar 2006	06711060.1
48577-EP-EPT	07 Dec 2005	05850685.8
48577-EP-ETD	12 Nov 2010	10191027.1
48631-EP-EPT	22 Dec 2005	05857350.2
48698-EP-EPT	27 Apr 2006	06744584.1
48717-EP-EPT	15 Sep 2006	06795502.1
48725-EP-EPT	02 Jun 2006	06745060.1
48757-EP-EPT	04 May 2006	06744697.1
48835-EP-EPT	30 Jan 2006	06704375.2
48854-EP-EPT	29 Jun 2006	06764458.3
48907-EP-EPT	13 May 2005	05740723.1
49038-EP-EPT	14 Oct 2005	05799475.8
49044-EP-EPT	22 Jun 2006	06780002.9
49108-EP-EPT	14 Aug 2006	06778498.3
49270-EP-EPT	30 Aug 2006	06795372.9

A5

49276-EP-EPT	07 Jun 2006	06765470.7
49455-EP-EPT	25 Aug 2005	05782442.7
49477-EP-EPT	24 Nov 2006	06821031.9
49481-EP-EPT	23 Mar 2006	06710582.5
49485-EP-EPT	12 Apr 2006	06744492.7
49486-EP-EPT	10 Apr 2006	06725911.9
49511-EP-EPT	03 Jan 2007	07700014.9
49522-EP-EPT	14 Jun 2006	06765525.8
49538-EP-EPT	27 Nov 2006	06821045.9
49545-EP-EPT	24 Apr 2006	06744551.0
49562-EP-EPT	30 May 2006	06755921.1
49563-EP-EPT	08 Jun 2006	06765540.7
49584-EP-EPA	16 Nov 2006	06255874.7
49615-EP-EPT	13 Apr 2006	06727549.5
49685-EP-EPT	28 Aug 2006	06795791.0
49704-EP-EPT	07 Nov 2006	06820853.7
49712-EP-EPT	13 Nov 2006	06820973.3
49798-EP-EPT	28 Nov 2006	06831970.6
49872-EP-EPT	18 Jan 2007	07700625.2
49926-EP-EPT	13 Apr 2007	07734983.5
49937-EP-EPT	26 Jan 2006	06701396.1
49975-EP-EPT	04 Dec 2006	06832058.9
50057-EP-EPT	15 Oct 2005	05806227.4
50173-EP-EPT	28 Feb 2006	06710980.1
50183-EP-EPT	26 Jun 2006	06779781.1
50250-EP-EPT	22 May 2006	06755899.9
50295-EP-EPT	20 Sep 2006	06847238.0
50370-EP-EPT	02 Feb 2006	06727370.6
50398-EP-EPT	25 Oct 2006	06820802.4
50577-EP-EPT	09 Nov 2006	06807986.2
50578-EP-EPT	02 Nov 2006	06807978.9
50643-EP-EPT	01 Sep 2006	06795402.4
50672-EP-EPT	28 Aug 2006	06795428.9
50717-EP-EPT	15 Dec 2006	06832219.7
50730-EP-EPT	21 May 2008	08761688.4
50744-EP-EPT	25 Jan 2007	07700533.8
50782-EP-EPT	27 Apr 2007	07734603.9
50786-EP-EPT	04 May 2007	07724877.1
50843-EP-EPT	15 Aug 2008	08787279.2
50845-EP-EPT	07 Sep 2006	06820749.7
50901-EP-EPT	06 Oct 2006	06808960.6
50979-EP-EPT	11 Oct 2006	06820789.3
50979-EP-ETD	17 Jun 2011	11170371.6
51022-EP-EPT	08 May 2007	07734505.6
51024-EP-EPT	24 Nov 2006	06821009.5
51033-EP-EPT	12 Apr 2007	07735481.9
51036-EP-EPT	14 May 2007	07804851.9
51042-EP-EPT	29 Jan 2007	07700527.0
51078-EP-EPT	30 May 2006	06755922.9
51083-EP-EPT	26 Oct 2006	06809159.4
51111-EP-EPT	07 Jun 2007	07734809.2

16

51167-EP-EPT	15 Feb 2007	07705595.2
51179-EP-EPT	28 Sep 2006	06805956.7
51192-EP-EPT	03 Apr 2007	07734188.1
51329-EP-EPT	28 Apr 2006	06765535.7
51337-EP-EPT	12 Oct 2006	06809118.0
51385-EP-EPT	11 Jan 2007	07700053.7
51434-EP-EPT	25 Jun 2007	07734952.0
51525-EP-EPT	27 Sep 2006	06805898.1
51548-EP-EPT	10 Jan 2007	07700472.9
51549-EP-EPT	04 Jan 2007	07700448.9
51549-EP-ETD	08 Jun 2012	12171305.1
51563-EP-EPT	23 Jan 2007	07700302.8
51593-EP-EPT	12 Jan 2007	07705430.2
51627-EP-EPT	14 Dec 2007	07858343.2
51655-EP-EPT	16 Mar 2007	07733996.8
51684-EP-EPT	27 Feb 2006	06744427.3
51694-EP-EPT	26 Dec 2007	07859182.3
51766-EP-EPT	27 Jun 2007	07788769.3
51795-EP-EPT	05 May 2006	06744874.6
51868-EP-EPT	16 Mar 2007	07712624.1
51873-EP-EPT	07 Mar 2006	06723379.1
51901-EP-EPT	24 Apr 2008	08762688.3
51943-EP-ETD	27 Nov 2012	12194366.6
51959-EP-EPT	22 May 2007	07734625.2
51996-EP-ETD	13 Mar 2012	12159141.6
51996-EP-ETD[2]	06 Oct 2013	13187465.3
52016-EP-EPT	12 Oct 2007	07825350.7
52071-EP-EPT	22 Jan 2007	07700661.7
52087-EP-EPT	19 Dec 2006	06849507.6
52122-EP-EPT	21 Jun 2007	07766577.6
52129-EP-EPT	24 Apr 2006	06727528.9
52169-EP-EPT	07 Aug 2007	07804724.8
52171-EP-EPT	28 Aug 2007	07826162.5
52173-EP-EPT	15 Jun 2007	07734840.7
52174-EP-EPT	14 Jun 2006	06765522.5
52187-EP-EPT	23 Feb 2007	07713059.9
52207-EP-EPT	24 May 2006	06755907.0
52218-EP-ETD	29 Aug 2014	14179879.3
52226-EP-ETD	11 May 2011	11165706.0
52227-EP-EPT	27 Feb 2007	07713081.3
52318-EP-EPT	26 Mar 2007	07730652.0
52349-EP-EPT	03 Apr 2007	07735368.8
52349-EP-ETD	21 Jun 2012	12172893.5
52454-EP-EPT	04 Dec 2007	07848190.0
52461-EP-EPT	16 Oct 2007	07825390.3
52500-EP-EPT	19 Jun 2007	07789428.5
52504-EP-EPT	27 Mar 2007	07734086.7
52537-EP-EPT	26 Jun 2007	07789452.5
52577-EP-EPT	30 Apr 2007	07734458.8
52612-EP-EPT	24 Apr 2007	07735630.1
52713-EP-EPT	25 Sep 2006	06809392.1

(17)

52781-EP-EPA	08 Nov 2007	07120226.1
52800-EP-EPT[2]	03 Apr 2007	07734196.4
52805-EP-EPT	02 Jun 2006	06765457.4
52812-EP-EPT	20 Aug 2007	07826064.3
52836-EP-ETD	31 Jul 2009	09166952.3
52893-EP-EPT	23 Aug 2007	07826120.3
52906-EP-EPT	17 Nov 2006	06849444.2
52932-EP-EPT	03 Jul 2006	06762433.8
52932-EP-ETD	15 Apr 2011	11003192.9
52955-EP-EPT	17 Nov 2006	06842402.7
52986-EP-EPT	21 Aug 2007	07789661.1
53021-EP-EPT	25 Jun 2007	07734954.6
53024-EP-EPT	01 May 2007	07789669.4
53047-EP-EPA	10 May 2007	07251936.6
53050-EP-EPA	29 May 2007	07252195.8
53115-EP-EPT	12 Jul 2007	07788800.6
53167-EP-EPT	29 Jun 2007	07804547.3
53188-EP-EPT	22 Aug 2007	07804805.5
53191-EP-EPT	24 Aug 2007	07804823.8
53260-EP-EPT	28 Jun 2007	07766593.3
53263-EP-EPT	06 Jul 2007	07788793.3
53264-EP-EPT	06 Jun 2007	07734842.3
53277-EP-EPT	18 Jun 2007	07804530.9
53279-EP-EPT	28 Sep 2006	06820764.6
53281-EP-EPT	11 Mar 2008	08719276.1
53297-EP-EPT	30 Aug 2007	07826215.1
53306-EP-EPT	28 Dec 2006	06842289.8
53353-EP-EPT	18 Sep 2007	07848794.9
53382-EP-EPT	16 Aug 2007	07789658.7
53395-EP-EPT	15 Jun 2007	07734847.2
53438-EP-EPT	27 Mar 2008	08718259.8
53450-EP-EPT	22 Dec 2006	06849519.1
53460-EP-EPT	13 Oct 2006	06809086.9
53522-EP-EPT	11 Jul 2007	07804597.8
53541-EP-EPT	16 Aug 2007	07803709.0
53551-EP-EPT	12 Sep 2007	07826352.2
53596-EP-EPT	11 Oct 2006	06809026.5
53607-EP-EPT	12 Dec 2007	07859018.9
53642-EP-EPT	20 Sep 2007	07826469.4
53695-EP-EPT	10 Jul 2007	07805109.1
53718-EP-EPD	01 Mar 2013	13157507.8
53725-EP-EPT	27 Dec 2007	07866590.8
53736-EP-EPT	28 Mar 2008	08719388.4
53737-EP-EPT	06 Nov 2008	08865832.3
53758-EP-EPT	21 Sep 2007	07825164.2
53791-EP-EPT	01 Dec 2006	06831623.1
53828-EP-EPT	04 Apr 2008	08789142.0
53845-EP-EPT	13 Oct 2006	06821062.4
53876-EP-EPT	23 Jun 2008	08776454.4
53989-EP-EPT	18 Sep 2007	07825130.3
54007-EP-EPT	10 Apr 2007	07789596.9

54044-EP-EPT	20 Dec 2007	07872085.1
54051-EP-EPT	21 Aug 2007	07826081.7
54062-EP-EPT	08 Feb 2008	08707634.5
54070-EP-EPT	27 Oct 2006	06831735.3
54075-EP-EPT	16 Apr 2008	08736842.9
54076-EP-EPT	20 Aug 2007	07826055.1
54127-EP-EPT	18 Sep 2007	07826436.3
54179-EP-EPT	20 Sep 2006	06794121.1
54209-EP-EPT	27 Aug 2007	07804825.3
54217-EP-EPT	02 Oct 2007	07825242.6
54242-EP-EPT	16 Oct 2007	07826752.3
54285-EP-EPT	03 Jun 2008	08763175.0
54291-EP-EPT	26 Jun 2007	07788765.1
54292-EP-EPT	26 Sep 2007	07823157.8
54295-EP-EPT	20 Sep 2007	07825156.8
54296-EP-EPT	29 Oct 2007	07825524.7
54327-EP-EPT	09 Oct 2007	07826699.6
54379-EP-EPT	26 Sep 2007	07825189.9
54385-EP-EPT	13 Sep 2007	07826374.6
54389-EP-EPT	14 Nov 2006	06818544.6
54418-EP-EPT	26 Sep 2007	07825190.7
54419-EP-EPT	08 Oct 2007	07823182.6
54442-EP-EPT	28 Feb 2007	07734873.8
54455-EP-EPT	01 Oct 2007	07825227.7
54469-EP-EPT	12 Nov 2007	07825701.1
54485-EP-EPT	19 Oct 2007	07821587.8
54534-EP-EPT	19 Sep 2007	07825203.8
54577-EP-EPT	31 Jan 2007	07704822.1
54587-EP-EPT	18 Jul 2007	07789492.1
54604-EP-EPT	16 Apr 2008	08736843.7
54756-EP-EPT	30 Oct 2007	07825547.8
54798-EP-EPT	08 Aug 2007	07805350.1
54841-EP-EPT	15 Oct 2007	07849071.1
54873-EP-EPT	24 Mar 2008	08737328.8
54895-EP-EPT	02 May 2007	07734923.1
54908-EP-EPT	22 Jun 2007	07804969.9
54908-EP-EPT[2]	23 Jun 2008	08761310.5
54933-EP-ETD	23 Apr 2013	13164904.8
54939-EP-EPT	04 Mar 2008	08718557.5
54941-EP-EPT	29 Aug 2007	07826205.2
54944-EP-EPT	27 Jun 2008	08773738.3
54969-EP-EPT	29 Aug 2007	07826206.0
55000-EP-EPT	09 Jan 2008	08702381.8
55010-EP-EPT	01 Nov 2007	07823227.9
55068-EP-EPT	18 Oct 2007	07821524.1
55079-EP-EPT	03 Oct 2007	07826642.6
55083-EP-EPT	15 Apr 2008	08737870.9
55179-EP-EPT	26 Oct 2007	07858850.6
55205-EP-EPT	30 Oct 2007	07823219.6
55209-EP-EPT	12 Apr 2007	07724188.3
55228-EP-EPT	06 Nov 2007	07825606.2

(19)

55235-EP-EPT	26 Sep 2007	07826537.8
55265-EP-EPT	07 Jan 2008	08700211.9
55288-EP-EPT	18 Dec 2007	07858321.8
55337-EP-EPT	28 Dec 2007	07859210.2
55349-EP-EPA	12 Dec 2007	07122967.8
55350-EP-EPT	29 Mar 2007	07735319.1
55354-EP-EPT	07 Nov 2007	07857199.9
55363-EP-EPT	21 Nov 2007	07848158.7
55392-EP-EPT	29 Jan 2008	08708356.4
55453-EP-EPT	15 Nov 2007	07848894.7
55487-EP-EPT	27 Dec 2007	07857135.3
55521-EP-EPT	20 Jun 2007	07734947.0
55561-EP-EPT	08 Dec 2008	08869387.4
55569-EP-EPT	29 Oct 2007	07826897.6
55570-EP-EPT	31 Jan 2008	08702372.7
55571-EP-EPT	19 Dec 2007	07858359.8
55630-EP-EPT	25 Jun 2007	07764817.8
55712-EP-EPT	19 Mar 2008	08776253.0
55767-EP-EPT	15 Jan 2008	08702242.2
55823-EP-EPT	03 Dec 2007	07848185.0
55839-EP-EPT	18 Jul 2007	07804622.4
55864-EP-EPT	20 Dec 2007	07859147.6
55892-EP-EPT	06 Feb 2008	08709775.4
55893-EP-EPT	03 Jan 2008	08700978.3
55898-EP-EPT	04 Jan 2008	08700202.8
55930-EP-EPT	11 Jun 2008	08763295.6
55951-EP-EPT	11 Jan 2008	08702226.5
55956-EP-ETD	26 Jun 2013	13173771.0
56048-EP-EPT	13 Aug 2008	08807316.8
56105-EP-EPT	02 Aug 2007	07801501.3
56143-EP-EPT	01 Nov 2007	07825570.0
56153-EP-EPT	17 Sep 2007	07804934.3
56203-EP-EPT	07 Sep 2006	06778566.7
56226-EP-EPT	29 Oct 2008	08844391.6
56230-EP-EPT	09 Nov 2007	07847131.5
56300-EP-EPT	27 Sep 2007	07825218.6
56347-EP-ETD	04 Oct 2010	10186380.1
56389-EP-EPT	19 Jun 2008	08776285.2
56436-EP-EPT	28 Dec 2007	07859208.6
56497-EP-EPT	11 Apr 2008	08736830.4
56505-EP-EPT	16 Jan 2008	08702257.0
56512-EP-EPT	22 May 2008	08759941.1
56529-EP-EPT	17 Dec 2007	07858347.3
56535-EP-EPT	19 Jun 2007	07765929.0
56562-EP-EPT	05 Jan 2008	08700203.6
56563-EP-EPT	09 Jan 2008	08701347.0
56577-EP-EPT	29 Feb 2008	08717266.4
56598-EP-EPT	05 Jan 2008	08700204.4
56623-EP-EPT	18 Oct 2007	07871776.6
56636-EP-EPT	04 Jun 2007	07730809.6
56687-EP-EPT	08 Jan 2008	08700224.2

56762-EP-EPT	25 Jun 2007	07734964.5
56765-EP-EPT	20 Jun 2007	07734946.2
56765-EP-ETD	15 Feb 2012	12155512.2
56779-EP-EPT	31 Jan 2008	08709303.5
56822-EP-EPT	17 Jan 2008	08702458.4
56834-EP-EPT	25 Apr 2008	08775450.3
56835-EP-EPT	28 Jan 2008	08702325.5
56892-EP-EPT	28 Nov 2008	08855340.9
56987-EP-EPT	21 Feb 2008	08709883.6
56989-EP-EPT	22 Feb 2008	08719449.4
57047-EP-EPT	20 Mar 2008	08737320.5
57054-EP-EPT	01 Feb 2008	08702553.2
57077-EP-EPT	09 Oct 2008	08807942.1
57130-EP-EPT	07 Feb 2008	08709959.4
57152-EP-EPT	26 Feb 2008	08719474.2
57179-EP-EPT	13 Feb 2008	08709805.9
57183-EP-EPT	09 May 2008	08750933.7
57220-EP-EPT	20 Jul 2007	07788808.9
57221-EP-EPT	01 May 2008	08738060.6
57291-EP-EPT	10 Apr 2008	08737786.7
57303-EP-EPT	26 Sep 2008	08807171.7
57324-EP-EPT	02 Oct 2007	07826628.5
57339-EP-EPT	22 Aug 2008	08787745.2
57384-EP-EPT	06 May 2008	08761640.5
57392-EP-EPT	15 May 2008	08751218.2
57397-EP-EPT	18 Jun 2007	07766557.8
57400-EP-EPT	18 Mar 2008	08719755.4
57435-EP-EPT	07 Mar 2008	08719369.4
57436-EP-EPT	28 Feb 2008	08709252.4
57445-EP-EPT	25 Sep 2008	08805455.6
57459-EP-EPT	13 Feb 2009	09717327.2
57488-EP-EPA	22 Dec 2008	08172527.7
57492-EP-EPT	29 Feb 2008	08719528.5
57494-EP-EPT	13 Mar 2008	08719684.6
57547-EP-EPT	30 Apr 2008	08750869.3
57554-EP-EPT	06 Nov 2006	06837112.9
57554-EP-ETD	08 Jun 2012	12171396.0
57557-EP-EPT	15 Sep 2007	07825120.4
57559-EP-EPT	10 Mar 2008	08719269.6
57561-EP-EPT	13 Mar 2008	08719688.7
57564-EP-EPT	29 Apr 2008	08737570.5
57579-EP-EPT	18 Jul 2008	08786270.2
57582-EP-EPT	10 Oct 2007	07823188.3
57585-EP-EPT	30 Apr 2008	08738050.7
57667-EP-EPT	07 May 2008	08750893.3
57691-EP-EPD	31 Jul 2014	14179355.4
59020-EP-EPT	16 May 2012	12725488.6
59040-EP-EPA	24 Jul 2012	12177622.3
59041-EP-EPA	18 Aug 2011	11177975.7
59042-EP-EPA	15 Sep 2011	11181421.6
60014-EP-EPT	15 May 2008	08750945.1

60014-EP-ETD	23 Nov 2009	09176725.1
60014-EP-ETD[2]	23 Nov 2009	09176726.9
60018-EP-EPT	08 Apr 2008	08737762.8
60086-EP-EPT	02 Apr 2008	08735703.4
60147-EP-EPT	10 Jun 2008	08763286.5
60163-EP-EPT	15 Apr 2008	08737871.7
60301-EP-EPT	07 Aug 2007	07804725.5
60315-EP-EPT	14 Aug 2007	07825458.8
60343-EP-EPT	02 Apr 2008	08735688.7
60350-EP-EPT	22 May 2008	08751306.5
60358-EP-EPT	23 Apr 2008	08737971.5
60369-EP-EPT	02 May 2008	08738069.7
60506-EP-EPT	27 Nov 2008	08853713.9
60559-EP-EPT	14 May 2008	08750942.8
60650-EP-EPT	26 Sep 2008	08807830.8
60663-EP-EPT	19 Nov 2007	07847215.6
60679-EP-EPT	12 Jun 2008	08775478.4
60689-EP-EPT	27 Aug 2008	08806963.8
60704-EP-EPT	02 May 2008	08750889.1
60746-EP-EPT	26 Dec 2008	08867337.1
60765-EP-EPT	10 Apr 2008	08735132.6
60766-EP-EPT	19 Jun 2008	08763392.1
60856-EP-EPT	28 Jun 2007	07804543.2
60863-EP-ETD	27 Feb 2013	13156861.0
60863-EP-ETD[2]	30 Jun 2014	14175073.7
60904-EP-EPT	17 Jun 2008	08776425.4
60935-EP-EPT	11 Jun 2008	08763287.3
60950-EP-EPT	17 Jun 2008	08761123.2
60971-EP-EPA	14 Jun 2007	07110315.4
60974-EP-EPT	24 Apr 2009	09734935.1
61079-EP-EPT	14 Aug 2008	08807322.6
61097-EP-EPT	15 Jun 2007	07788744.6
61144-EP-EPT	14 Feb 2008	08718518.7
61148-EP-EPT[2]	19 Sep 2008	08804510.9
61159-EP-EPT	24 Oct 2008	08841095.6
61185-EP-EPA	16 Oct 2008	08018101.9
61208-EP-EPT	25 Jun 2008	08776289.4
61208-EP-ETD	12 Dec 2012	12196635.2
61211-EP-EPT	25 Jun 2008	08776290.2
61273-EP-ETD	28 Mar 2013	13161611.2
61350-EP-EPT	08 Aug 2008	08782689.7
61353-EP-EPT	16 Oct 2007	07823192.5
61360-EP-EPT	22 Aug 2008	08789624.7
61364-EP-EPT	06 Aug 2008	08789572.8
61435-EP-EPT	12 Aug 2008	08807296.2
61457-EP-EPT	08 Dec 2008	08865434.8
61485-EP-EPT	13 Nov 2007	07848143.9
61513-EP-EPA	28 Nov 2008	08170172.4
61552-EP-EPT	30 Jul 2008	08788964.8
61590-EP-EPT	14 Jan 2009	09705736.8
61623-EP-EPT	03 Apr 2009	09732761.3

61698-EP-EPT	03 Apr 2009	09733963.4
61722-EP-EPT	20 Feb 2009	09712761.7
61725-EP-EPD	14 Nov 2012	12192669.5
61725-EP-EPT	29 Oct 2007	07819402.4
61754-EP-EPT	10 Jun 2009	09769411.1
61813-EP-EPT	09 Dec 2008	08869070.6
61821-EP-EPT	08 Sep 2008	08807573.4
61833-EP-EPT	17 Dec 2007	07859078.3
61854-EP-EPT	20 Aug 2008	08803109.1
61872-EP-EPT	28 Aug 2008	08807462.0
61873-EP-EPT	09 Sep 2008	08789677.5
61892-EP-EPT	17 Dec 2008	08863556.0
61916-EP-EPT	19 Sep 2008	08807736.7
61923-EP-EPT	13 Dec 2007	07873369.8
61974-EP-EPT	15 Oct 2008	08843608.4
61999-EP-EPT	25 Sep 2008	08807792.0
62013-EP-EPT	25 Sep 2008	08807814.2
62053-EP-EPT	13 Oct 2008	08807224.4
62079-EP-EPT	30 Nov 2007	07848966.3
62106-EP-ETD	10 May 2012	12167473.3
62107-EP-EPT	25 Sep 2008	08834467.6
62117-EP-EPT	23 Sep 2008	08807757.3
62139-EP-EPT	24 Sep 2008	08807775.5
62177-EP-EPT	18 Dec 2008	08862145.3
62197-EP-ETD	26 Jun 2014	14174094.4
62213-EP-EPT	24 Nov 2008	08853535.6
62235-EP-EPT	20 Jan 2009	09712766.6
62265-EP-EPT	10 Apr 2007	07755292.5
62269-EP-EPT	10 Oct 2008	08807953.8
62320-EP-EPT	16 Jun 2009	09772612.9
62369-EP-EPT	17 Oct 2008	08840838.0
62383-EP-EPT	23 Oct 2008	08842636.6
62409-EP-EPA	03 Dec 2008	08170566.7
62425-EP-EPA	03 Dec 2008	08020963.8
62434-EP-ETD	21 Dec 2012	12198949.5
62458-EP-EPT	04 Jan 2008	08702183.8
62465-EP-EPT	17 Oct 2008	08807238.4
62476-EP-EPT	31 Mar 2008	08718371.1
62492-EP-EPT	31 Oct 2008	08845233.9
62495-EP-EPT	12 Jan 2009	09702913.6
62499-EP-EPT	23 Apr 2009	09745874.9
62528-EP-EPT	16 Dec 2008	08863596.6
62568-EP-EPT	05 Dec 2008	08857011.4
62576-EP-EPT	27 Dec 2007	07857127.0
62609-EP-EPT	08 Jan 2009	09715026.2
62610-EP-EPT	13 Dec 2007	07856685.8
62619-EP-EPT	23 Dec 2008	08867011.2
62627-EP-EPT	17 Jan 2008	08702459.2
62647-EP-EPT	18 Dec 2008	08863006.6
62657-EP-EPT	02 Jul 2009	09772900.8
62680-EP-EPT	26 Jan 2009	09717412.2

62700-EP-EPT	15 Jan 2009	09716789.4
62739-EP-EPT	26 Dec 2008	08867744.8
62744-EP-EPT	21 Nov 2008	08856644.3
62761-EP-EPT	03 Oct 2008	08805054.7
62762-EP-EPT	17 Dec 2008	08864993.4
62781-EP-EPT	05 Nov 2008	08859800.8
62835-EP-EPT	18 Mar 2009	09722899.3
62837-EP-EPT	28 Sep 2009	09820309.4
62844-EP-EPT	26 Nov 2008	08854916.7
62878-EP-EPT	23 Jun 2008	08774236.7
62901-EP-EPT	16 Apr 2009	09736060.6
62904-EP-EPT	19 Aug 2008	08807361.4
62945-EP-EPT	13 Oct 2008	08858967.6
63033-EP-EPT	18 Dec 2008	08870731.0
63037-EP-EPT	03 Mar 2009	09728700.7
63093-EP-EPT	18 Feb 2009	09718661.3
63120-EP-EPT	15 Jan 2009	09715587.3
63142-EP-EPT	31 Dec 2008	08870254.3
63217-EP-EPT	08 Apr 2009	09734101.0
63220-EP-EPT	03 Jun 2009	09765958.5
63290-EP-EPT	28 May 2009	09769407.9
63326-EP-EPT	11 Aug 2008	08787110.9
63346-EP-EPT	26 Jun 2008	08761392.3
63357-EP-EPT	29 Jan 2009	09709557.4
63359-EP-EPT	07 Jan 2009	09700915.3
63372-EP-EPT	25 May 2009	09793986.2
63372-EP-ETD	04 Mar 2013	13157662.1
63386-EP-EPT	17 Mar 2009	09723377.9
63501-EP-EPT	27 Feb 2008	08719493.2
63515-EP-EPT	12 Jan 2009	09705294.8
63541-EP-EPT	03 Sep 2009	09817328.9
63574-EP-EPT	13 Jan 2009	09706902.5
63599-EP-EPT	20 Feb 2009	09711766.7
63602-EP-EPT	17 Mar 2009	09727102.7
63612-EP-EPT	28 Jan 2009	09719427.8
63619-EP-EPT	24 Apr 2009	09738454.9
63625-EP-EPT	10 Feb 2009	09709589.7
63629-EP-EPT	07 Jan 2009	09709049.2
63643-EP-EPT	15 Feb 2008	08716900.9
63651-EP-EPT	03 Feb 2009	09708050.1
63657-EP-EPT	05 Mar 2009	09729418.5
63685-EP-EPT	28 Jan 2009	09709725.7
63696-EP-EPT	25 Jun 2008	08775512.0
63706-EP-EPT	16 Dec 2008	08872411.7
63727-EP-EPT	13 Feb 2009	09709869.3
63749-EP-EPT	25 Feb 2009	09749971.9
63751-EP-EPT	21 Apr 2009	09757660.7
63755-EP-EPT	05 Mar 2009	09749972.7
63768-EP-EPT	17 Feb 2009	09735958.2
63771-EP-EPT	06 Mar 2009	09717959.2
63786-EP-EPT	31 Mar 2009	09728615.7

63802-EP-EPT	03 Jun 2009	09772607.9
63819-EP-EPT	03 Apr 2009	09765957.7
63880-EP-EPT	04 May 2009	09742196.0
63885-EP-EPT	13 Mar 2009	09721986.9
63888-EP-EPT	11 Sep 2009	09817331.3
63906-EP-EPT	22 May 2008	08751308.1
63923-EP-EPT	27 Mar 2009	09725400.7
63958-EP-EPT	09 Sep 2009	09812741.8
63976-EP-EPT	25 Jun 2009	09769435.0
63985-EP-EPT	16 Jun 2009	09769623.1
63992-EP-EPT	21 Apr 2009	09738273.3
63995-EP-EPT	16 Jun 2009	09769622.3
63999-EP-EPT	29 Jun 2009	09769657.9
64025-EP-EPT	09 Jun 2008	08763268.3
64029-EP-EPT	09 May 2008	08750243.1
64039-EP-EPT	11 May 2009	09754016.5
64062-EP-EPT	30 Mar 2009	09728383.2
64102-EP-EPT	18 May 2009	09769406.1
64110-EP-EPT	10 Mar 2009	09734474.1
64121-EP-EPT	11 Jun 2009	09762050.4
64140-EP-EPT	09 Nov 2009	09832987.3
64198-EP-EPT	15 May 2008	08751212.5
64221-EP-EPT	08 Apr 2009	09730531.2
64242-EP-EPT	23 Apr 2009	09735847.7
64246-EP-EPT	25 Mar 2009	09730418.2
64255-EP-EPT	25 May 2009	09761847.4
64278-EP-EPT	08 Oct 2008	08805153.7
64298-EP-EPT	18 Jan 2006	06718618.9
64298-EP-EPT[2]	21 Aug 2006	06801968.6
64298-EP-EPT[3]	15 May 2007	07797483.0
64305-EP-EPT	14 Apr 2008	08736203.4
64308-EP-EPT	01 Jun 2009	09757852.0
64311-EP-EPT	28 Apr 2009	09738279.0
64314-EP-EPT	21 Apr 2008	08736436.0
64320-EP-EPT	16 Apr 2009	09734819.7
64323-EP-EPT	24 Apr 2009	09735643.0
64325-EP-EPT	24 Apr 2009	09734074.9
64343-EP-EPT	25 Mar 2009	09732521.1
64380-EP-EPT	02 Jun 2009	09757674.8
64398-EP-EPT	27 Mar 2009	09745875.6
64418-EP-EPT	24 Apr 2009	09745879.8
64424-EP-EPT	22 Apr 2009	09735267.8
64425-EP-EPT	31 Oct 2008	08877676.0
64479-EP-EPT	04 May 2009	09742528.4
64505-EP-EPT	13 Jun 2008	08763338.4
64522-EP-EPT	02 Sep 2009	09827218.0
64524-EP-EPT	01 May 2009	09738470.5
64527-EP-EPT	05 Nov 2009	09825806.4
64556-EP-EPT	17 Jul 2008	08775187.1
64556-EP-ETD	10 Mar 2011	11157674.0
64589-EP-EPT	23 Jul 2008	08786358.5

64607-EP-EPT	30 Jun 2008	08774555.0
64616-EP-ETD	12 Jun 2013	13171736.5
64662-EP-EPT	04 Nov 2009	09825805.6
64687-EP-EPT	19 Jan 2009	09838179.1
64692-EP-EPT	26 Oct 2009	09796807.7
64694-EP-EPT	27 Jun 2008	08774452.0
64711-EP-EPT	22 Apr 2009	09804590.9
64784-EP-EPT	24 Sep 2009	09815745.6
64820-EP-EPT	09 Sep 2009	09818844.4
64842-EP-EPT	01 Dec 2009	09830071.8
64856-EP-EPT	15 May 2009	09761846.6
64866-EP-EPT	14 Dec 2009	09836161.1
64879-EP-EPT	15 Oct 2009	09820323.5
64886-EP-EPT	01 Jun 2009	09769408.7
64889-EP-EPT	26 Nov 2008	08876368.5
64898-EP-EPT	14 May 2009	09772604.6
64924-EP-EPT	19 Dec 2008	08875111.0
64927-EP-EPT	22 Sep 2009	09783303.2
64967-EP-EPT	15 May 2009	09761845.8
64982-EP-EPT	25 Sep 2009	09824475.9
64995-EP-EPT	16 Oct 2009	09820314.4
64997-EP-EPT	04 May 2009	09745880.6
64997-EP-ETD	21 Nov 2012	12193530.8
65040-EP-EPT	23 Jun 2009	09772616.0
65064-EP-EPT	03 Sep 2009	09824456.9
65068-EP-EPT	23 Jun 2009	09769639.7
65130-EP-EPT	25 Jun 2009	09769650.4
65142-EP-EPT	22 Jun 2009	09769425.1
65143-EP-EPT	16 Dec 2008	08875779.4
65148-EP-EPT	08 Jan 2010	10700837.7
65154-EP-EPT[2]	25 Jun 2009	09769338.6
65167-EP-EPT	15 Oct 2009	09820322.7
65180-EP-EPT	17 Jul 2009	09815717.5
65184-EP-EPT	25 Jun 2009	09769339.4
65203-EP-EPA	01 Sep 2009	09169110.5
65204-EP-EPT	13 Aug 2009	09806508.9
65215-EP-EPT	09 Oct 2009	09818860.0
65239-EP-EPT	09 Jun 2009	09793987.0
65285-EP-EPT	10 Sep 2009	09823128.5
65298-EP-EPA	21 Sep 2009	09170821.4
65298-EP-EPD	01 Aug 2012	12178906.9
65331-EP-EPT	07 Aug 2009	09777740.3
65375-EP-EPT	22 Jun 2009	09797543.7
65387-EP-EPT	29 Oct 2009	09823151.7
65400-EP-EPT	02 Jul 2009	09797545.2
65406-EP-EPT	16 Jul 2008	08781925.6
65416-EP-EPT	08 Dec 2009	09831518.7
65438-EP-EPT	21 Jan 2010	10733288.4
65445-EP-EPT	30 Sep 2009	09817344.6
65479-EP-EPT	16 Sep 2010	10816766.9
65482-EP-EPT	11 Sep 2009	09812754.1

65484-EP-EPT	10 Aug 2009	09842549.9
65497-EP-EPT	14 Oct 2009	09830049.4
65500-EP-EPT	24 Nov 2009	09793583.7
65506-EP-ETD	30 Oct 2014	14190971.3
65513-EP-ETD	13 Jan 2014	14150957.0
65532-EP-EPT	13 Aug 2009	09806510.5
65560-EP-EPT	01 Oct 2009	09827223.0
65569-EP-EPT	08 Dec 2008	08875425.4
65573-EP-EPT	27 Oct 2009	09823145.9
65577-EP-EPT	16 Dec 2008	08868193.7
65607-EP-EPT	25 Sep 2009	09821639.3
65614-EP-EPT	19 Aug 2009	09807955.1
65638-EP-EPT	15 Oct 2008	08875826.3
65655-EP-EPT	11 Sep 2009	09836117.3
65667-EP-EPT	17 Dec 2009	09801164.6
65690-EP-EPT	04 Nov 2009	09824480.9
65695-EP-EPT	18 Feb 2010	10846398.5
65704-EP-EPT	13 Jan 2010	10733277.7
65707-EP-EPT	30 Dec 2009	09836150.4
65750-EP-EPT	18 Sep 2009	09814159.1
65801-EP-EPT	01 Dec 2009	09830072.6
65808-EP-EPT	22 Sep 2009	09815758.9
65814-EP-EPT	25 Feb 2010	10755501.3
65848-EP-EPT	23 Sep 2009	09815741.5
65893-EP-EPT	18 Nov 2009	09830054.4
65907-EP-EPT	04 Dec 2009	09836125.6
65930-EP-EPT	14 Dec 2009	09836139.7
65952-EP-EPT	25 Oct 2010	10838732.5
65973-EP-EPT	02 Oct 2009	09818848.5
66015-EP-EPT	15 Oct 2008	08875186.2
66046-EP-EPT	05 Nov 2009	09824466.8
66050-EP-EPT	04 Sep 2009	09815722.5
66051-EP-EPT	19 Feb 2010	10750440.9
66062-EP-EPT	13 Nov 2009	09828707.1
66071-EP-EPT	24 Dec 2008	08875791.9
66076-EP-EPT	30 Sep 2009	09817345.3
66114-EP-EPT	22 Feb 2010	10743449.0
66117-EP-EPT	12 Nov 2008	08875313.2
66120-EP-EPT	24 Nov 2009	09831516.1
66125-EP-EPT	13 Oct 2009	09838695.6
66146-EP-EPT	02 Dec 2009	09836122.3
66163-EP-EPT	03 Nov 2008	08875263.9
66169-EP-EPA	16 Dec 2009	09179436.2
66172-EP-EPT	04 Nov 2008	08875854.5
66190-EP-EPT	10 Oct 2008	08874966.8
66191-EP-EPT	22 Dec 2009	09834197.7
66198-EP-EPT	16 Jan 2009	09786293.2
66207-EP-EPT	30 Oct 2009	09823175.6
66217-EP-EPT	17 Dec 2009	09833047.5
66218-EP-EPT	18 Nov 2008	08875332.2
66227-EP-EPT	02 Dec 2009	09796657.6

66242-EP-EPT	14 Dec 2009	09839081.8
66268-EP-EPT	04 Mar 2009	09841233.1
66269-EP-EPT	04 Mar 2009	09841237.2
66270-EP-EPT	04 Mar 2009	09841235.6
66271-EP-EPT	04 Mar 2009	09841232.3
66296-EP-EPT	04 Nov 2008	08875276.1
66303-EP-EPT	01 Dec 2009	09836121.5
66328-EP-EPT	14 Apr 2010	10764159.9
66338-EP-EPT	10 Nov 2009	09824462.7
66371-EP-EPT	30 Oct 2008	08877678.6
66377-EP-EPT	09 Dec 2009	09836159.5
66410-EP-EPT	02 Nov 2009	09828693.3
66411-EP-EPT	21 Jan 2010	10733289.2
66418-EP-EPT	26 Oct 2009	09823130.1
66454-EP-EPT	27 Jan 2010	10738254.1
66471-EP-EPT	09 Nov 2009	09824467.6
66548-EP-EPA	07 Apr 2010	10159215.2
66550-EP-EPT	16 Dec 2009	09836143.9
66560-EP-EPT	12 Nov 2009	09825818.9
66569-EP-EPT	12 Jan 2010	10731100.3
66574-EP-EPT	09 Dec 2009	09801193.5
66624-EP-EPT	27 Jan 2010	10735509.1
66632-EP-EPT	11 Feb 2010	10740995.5
66656-EP-EPT	14 Dec 2009	09836140.5
66674-EP-EPT	04 Dec 2009	09830065.0
66680-EP-EPT	14 Jan 2010	10731101.1
66708-EP-EPT	12 May 2010	10774606.7
66709-EP-EPT	25 Jan 2010	10735507.5
66731-EP-EPT	24 Feb 2009	09785817.9
66748-EP-EPT	26 Mar 2009	09842037.5
66804-EP-EPT	02 Dec 2009	09806175.7
66812-EP-EPT	15 Jul 2009	09780634.3
66814-EP-EPT	11 Dec 2009	09833001.2
66822-EP-EPT	04 Feb 2010	10738257.4
66859-EP-EPT	23 Mar 2010	10755507.0
66867-EP-EPT	13 Jan 2010	10735503.4
66868-EP-EPT	07 May 2010	10772084.9
66890-EP-EPT	15 Dec 2009	09836141.3
66908-EP-EPT	14 Sep 2009	09836118.1
66916-EP-EPT	19 Feb 2010	10743460.7
66939-EP-EPT	19 May 2010	10791693.4
66952-EP-EPT	11 Apr 2000	00923266.1
66958-EP-EPT	12 Mar 2010	10761241.8
66966-EP-EPT	30 Jun 2009	09846736.8
66972-EP-EPT	29 Jun 2009	09846734.3
66973-EP-EPT	28 Jan 2009	09839075.0
66975-EP-EPT	26 Oct 2010	10826172.8
66991-EP-EPT	08 Feb 2010	10738272.3
66992-EP-EPT	24 Feb 2010	10745856.4
67042-EP-EPT	08 Jan 2010	10735502.6
67097-EP-EPT	27 Apr 2009	09843935.9

67127-EP-EPT	28 Dec 2009	09839077.6
67163-EP-EPT	02 Apr 2010	10848668.9
67172-EP-EPT	10 May 2010	10783027.5
67173-EP-EPT	17 Sep 2009	09783136.6
67174-EP-EPT	07 Apr 2010	10766696.8
67205-EP-EPT	16 Mar 2009	09776442.7
67282-EP-EPT	14 Nov 2006	06846909.7
67295-EP-EPT	04 Mar 2010	10750420.1
67300-EP-EPT	04 Mar 2010	10750419.3
67343-EP-EPT	02 Feb 2010	10735534.9
67361-EP-EPT	28 Jan 2010	10735521.6
67377-EP-EPT	21 Oct 2009	09821678.1
67385-EP-EPT	28 Jun 2010	10793711.2
67421-EP-EPT	20 Jan 2010	10764140.9
67429-EP-EPT	02 Dec 2009	09831549.2
67436-EP-EPT	27 Nov 2009	09828709.7
67439-EP-EPT	28 Dec 2009	09836127.2
67447-EP-EPT	04 Nov 2009	09824481.7
67466-EP-EPT	19 Apr 2010	10777416.8
67505-EP-EPT	24 Apr 2009	09843592.8
67520-EP-EPT	16 Dec 2008	08863405.0
67521-EP-EPT	23 Jan 2008	08701916.2
67548-EP-EPT	09 Sep 2008	08806223.7
67559-EP-EPT	31 Jul 2008	08776099.7
67570-EP-EPT	06 Apr 2010	10764144.1
67597-EP-EPT	01 Mar 2006	06709945.7
67611-EP-EPT	19 Nov 2004	04798599.9
67617-EP-EPT	08 Jun 2005	05748210.1
67619-EP-EPT	08 Aug 2006	06779076.6
67622-EP-EPT	29 Apr 2005	05738730.0
67642-EP-EPT	03 Feb 2003	03734778.8
67647-EP-EPT	28 Jul 2004	04743595.3
67680-EP-EPT	22 Aug 2001	01963139.9
67697-EP-EPT	09 Feb 2000	00901821.9
67726-EP-EPT	25 May 2010	10793706.2
67761-EP-EPT	19 Apr 2010	10764170.6
67776-EP-EPT	21 Dec 2007	07848664.4
67826-EP-EPT	30 Mar 2010	10766692.7
67829-EP-EPT	30 Mar 2010	10766693.5
67838-EP-EPT	15 Jun 2010	10793685.8
67857-EP-EPT	19 Feb 2010	10755516.1
68033-EP-EPT	29 Mar 2010	10758121.7
68131-EP-EPT	08 Apr 2010	10769371.5
68267-EP-EPT	06 May 2010	10772071.6
68268-EP-EPT	08 Feb 2010	10740976.5
68302-EP-EPT	17 May 2010	10777438.2
68354-EP-EPT	18 May 2010	10777425.9
68381-EP-EPT	04 Feb 2010	10761224.4
68383-EP-EPT	16 Apr 2010	10764161.5
68386-EP-EPT	10 May 2010	10777418.4
68397-EP-EPT	09 Feb 2010	10748400.8

68409-EP-EPT	08 Jan 2010	10743455.7
68425-EP-EPT	05 Feb 2010	10748379.4
68448-EP-EPT	07 Sep 2010	10813426.3
68451-EP-EPT	07 Sep 2010	10813401.6
68491-EP-EPT	20 Jan 2010	10753162.6
68507-EP-EPT	14 Apr 2010	10764158.1
68551-EP-EPT	06 May 2010	10772073.2
68575-EP-EPT	08 Jun 2009	09779676.7
68591-EP-EPT	23 Mar 2009	09786341.9
68593-EP-EPT	02 Dec 2010	10837099.0
68602-EP-EPT	26 Feb 2010	10755482.6
68615-EP-EPT	17 May 2010	10777440.8
68634-EP-EPT	16 Mar 2010	10753169.1
68635-EP-EPT	23 Jun 2009	09846423.3
68646-EP-EPT	29 Apr 2010	10769384.8
68662-EP-EPT	07 Dec 2009	09851995.2
68663-EP-EPT	30 Jun 2009	09846737.6
68687-EP-EPT	30 Apr 2009	09786377.3
68695-EP-EPT	27 May 2009	09845124.8
68700-EP-EPT	17 May 2010	10780103.7
68701-EP-EPT	01 Nov 2010	10827998.5
68718-EP-EPT	29 Mar 2010	10758119.1
68722-EP-EPT	30 Jun 2009	09780039.5
68723-EP-EPT	21 May 2010	10783028.3
68730-EP-EPT	15 Sep 2010	10819956.3
68736-EP-EPT	29 Apr 2010	10769400.2
68738-EP-EPA	15 Apr 2010	10160017.9
68742-EP-EPT	28 Apr 2010	10769383.0
68789-EP-EPT	08 Apr 2010	10772063.3
68797-EP-EPT	29 Mar 2010	10761243.4
68828-EP-EPT	08 Apr 2010	10769370.7
68863-EP-EPT	23 Apr 2010	10766719.8
68864-EP-EPT	24 Jun 2009	09846425.8
68877-EP-EPT	11 May 2010	10791662.9
68881-EP-EPT	15 Apr 2010	10793658.5
68900-EP-EPT	23 Jun 2009	09846424.1
68942-EP-EPT	25 May 2010	10852073.5
68968-EP-EPT	25 Jun 2009	09846427.4
69007-EP-EPT	23 Jul 2009	09847520.5
69009-EP-EPT	11 Jun 2010	10785805.2
69052-EP-EPT	19 Apr 2010	10793659.3
69058-EP-EPT	25 Jun 2009	09846426.6
69068-EP-EPT	16 Jun 2010	10793666.8
69093-EP-EPT	16 Mar 2011	11755773.6
69109-EP-EPT	24 Apr 2009	09779352.5
69131-EP-EPT	08 Jun 2010	10791666.0
69153-EP-EPT	30 Jun 2009	09780022.1
69206-EP-EPT	26 May 2010	10793707.0
69211-EP-EPT	22 Apr 2010	10769373.1
69219-EP-EPT	23 Mar 2010	10777414.3
69239-EP-EPT	30 Jun 2010	10793691.6

69260-EP-EPT	22 Jun 2010	10791681.9
69286-EP-EPT	04 Oct 2010	10821657.3
69332-EP-EPT	30 Jun 2009	09846738.4
69335-EP-EPT	28 Jun 2010	10802001.7
69363-EP-EPT	06 Apr 2010	10783024.2
69371-EP-EPT	16 Jul 2009	09786014.2
69375-EP-EPT	30 Nov 2009	09806011.4
69378-EP-EPT	01 Jul 2010	10809591.0
69385-EP-EPT	16 Jun 2010	10791670.2
69397-EP-EPT	12 Mar 2010	10772061.7
69412-EP-EPT	12 Oct 2010	10823125.9
69421-EP-EPT	16 Jun 2010	10791671.0
69446-EP-EPT	29 Jun 2009	09786480.5
69469-EP-EPT	28 May 2010	10796768.9
69499-EP-EPT	08 Jun 2010	10789061.8
69516-EP-EPT	22 Mar 2011	11789333.9
69517-EP-EPT	24 Jun 2010	10818458.1
69562-EP-EPT	22 Jun 2010	10791723.9
69571-EP-EPT	16 Jun 2010	10793665.0
69584-EP-EPT	15 Apr 2010	10791656.1
69585-EP-EPA	21 Apr 2010	10160561.6
69592-EP-EPT	26 Feb 2010	10793655.1
69608-EP-EPT	08 Jun 2010	10785797.1
69627-EP-EPT	07 Sep 2009	09782694.5
69628-EP-EPT	26 Feb 2010	10793654.4
69630-EP-EPT	09 Jun 2010	10785800.3
69636-EP-EPT	28 May 2010	10789056.8
69655-EP-EPT	26 Mar 2010	10793656.9
69678-EP-EPT	14 Jun 2010	10791669.4
69694-EP-EPT	10 Aug 2010	10815032.7
69700-EP-EPT	11 Jun 2010	10813385.1
69705-EP-EPT	30 Jun 2009	09776894.9
69725-EP-EPT	14 Oct 2009	09752313.8
69732-EP-EPT	15 Jun 2010	10793684.1
69738-EP-EPT	17 Aug 2010	10823098.8
69750-EP-EPT	10 Aug 2010	10811346.5
69763-EP-EPT	12 Jan 2010	10842941.6
69779-EP-EPT	15 Jun 2010	10789080.8
69802-EP-EPT	20 Aug 2010	10815036.8
69805-EP-EPT	18 Aug 2010	10813387.7
69831-EP-EPT	24 Nov 2010	10840670.3
69838-EP-EPT	19 Aug 2010	10818460.7
69853-EP-EPT	16 Aug 2010	10808021.9
69863-EP-EPT	16 Jun 2010	10791672.8
69866-EP-EPT	30 Oct 2009	09751867.4
69894-EP-EPT	21 Apr 2010	10791660.3
69907-EP-EPA	22 Nov 2010	10192114.6
69978-EP-EPT	23 Dec 2009	09809063.2
69988-EP-EPT	18 Nov 2009	09802120.7
70005-EP-EPT	17 Aug 2010	10809612.4
70013-EP-EPT	13 Jul 2010	10808033.4

70016-EP-EPT	22 Sep 2009	09849712.6
70017-EP-EPT	12 Aug 2010	10819995.1
70019-EP-EPT	04 Nov 2009	09752153.8
70051-EP-EPT	26 Aug 2009	09778121.5
70070-EP-EPT	10 Aug 2010	10818459.9
70111-EP-EPT	17 Aug 2010	10809613.2
70135-EP-EPT	28 Jul 2010	10819994.4
70140-EP-EPT	23 Mar 2011	11758906.9
70142-EP-EPT	25 Sep 2009	09783444.4
70157-EP-EPT	24 Nov 2009	09756748.1
70169-EP-EPT	17 Aug 2010	10809614.0
70196-EP-EPT	17 Nov 2010	10832729.7
70217-EP-EPT	11 Nov 2009	09851222.1
70219-EP-EPT	24 Dec 2009	09809064.0
70232-EP-EPT	02 Nov 2010	10827999.3
70236-EP-EPT	23 Apr 2010	10850158.6
70238-EP-EPT	21 Dec 2010	10838814.1
70240-EP-EPT	02 Dec 2009	09851782.4
70243-EP-EPT	10 Aug 2010	10808036.7
70248-EP-EPT	01 Dec 2010	10834296.5
70273-EP-EPT	17 Oct 2011	11835717.7
70319-EP-EPT	21 Dec 2009	09807603.7
70323-EP-EPT	16 Apr 2010	10849758.7
70328-EP-EPT	21 Sep 2010	10821616.9
70337-EP-EPT	05 Oct 2009	09850198.4
70341-EP-EPT	17 Aug 2010	10811324.2
70351-EP-EPT	01 Feb 2011	11736700.3
70362-EP-EPT	26 Feb 2010	10846342.3
70389-EP-EPT	25 Aug 2010	10813388.5
70398-EP-EPT	16 Sep 2010	10816767.7
70404-EP-EPT	30 Sep 2010	10819986.0
70417-EP-EPT	08 Dec 2010	10838802.6
70427-EP-EPT	03 May 2010	10717004.5
70439-EP-EPT	17 Aug 2010	10819952.2
70443-EP-EPT	25 Oct 2010	10840630.7
70456-EP-EPT	24 Nov 2009	09851744.4
70467-EP-EPT	01 Jul 2010	10796786.1
70479-EP-EPT	24 Nov 2010	10840667.9
70491-EP-EPT	10 Aug 2010	10816746.1
70501-EP-EPT	24 Dec 2009	09807609.4
70512-EP-EPT	04 Oct 2010	10826167.8
70531-EP-EPT	19 Oct 2010	10824550.7
70537-EP-EPT	12 Nov 2010	10840661.2
70540-EP-EPT	17 Nov 2010	10835574.4
70542-EP-EPT	30 Sep 2010	10819988.6
70553-EP-EPT	16 Nov 2009	09796614.7
70579-EP-EPT	03 Nov 2010	10832693.5
70597-EP-EPT	17 Nov 2010	10831201.8
70599-EP-EPT	22 Sep 2010	10826163.7
70600-EP-EPT	16 Nov 2010	10838736.6
70602-EP-EPT	04 Oct 2010	10834271.8

70606-EP-EPT	14 Jan 2011	11739434.6
70607-EP-EPT	25 Oct 2010	10837096.6
70613-EP-EPT	16 Dec 2010	10848286.0
70624-EP-EPT	14 Jun 2011	11800240.1
70632-EP-EPT	24 Dec 2009	09852447.3
70644-EP-EPT	23 Nov 2010	10838795.2
70664-EP-EPT	18 Dec 2009	09852223.8
70665-EP-EPT	24 Dec 2009	09812423.3
70667-EP-EPT	30 Mar 2010	10848794.3
70689-EP-EPT	30 Dec 2009	09852768.2
70690-EP-EPT	21 Dec 2010	10840637.2
70700-EP-EPT	01 Dec 2010	10834279.1
70719-EP-EPT	09 Oct 2010	10821668.0
70722-EP-EPT	25 Nov 2010	10835546.2
70726-EP-EPT	21 Mar 2011	11771633.2
70736-EP-EPT	14 Dec 2009	09802153.8
70742-EP-EPT	20 Oct 2009	09752100.9
70743-EP-EPT	02 Feb 2010	10845138.6
70748-EP-EPT	17 Sep 2010	10826160.3
70755-EP-EPT	10 Dec 2009	09851971.3
70759-EP-EPT	12 Nov 2010	10837134.5
70760-EP-EPT	28 Apr 2010	10720565.0
70768-EP-EPT	04 Oct 2010	10838730.9
70784-EP-EPT	25 Jan 2011	11755740.5
70827-EP-EPT	24 Nov 2010	10834274.2
70838-EP-EPT	11 Dec 2009	09851975.4
70851-EP-EPT	31 Jan 2011	11739443.7
70852-EP-EPT	26 May 2011	11786199.7
70865-EP-EPT	09 Feb 2010	10845634.4
70884-EP-EPT	23 Nov 2010	10840665.3
70890-EP-EPT	02 Nov 2010	10835542.1
70905-EP-EPT	01 Mar 2010	10846923.0
70920-EP-EPT	10 Nov 2010	10829575.9
70935-EP-EPA	03 Nov 2010	10189790.8
70941-EP-EPT	15 Oct 2010	10835539.7
70944-EP-EPT	18 Dec 2009	09852192.5
70945-EP-EPT	23 Dec 2009	09802147.0
70948-EP-EPT	30 Dec 2009	09852727.8
70950-EP-EPT	20 Jan 2010	10843655.1
70951-EP-EPT	13 Jan 2011	11732707.2
70954-EP-EPT	15 Jan 2010	10842944.0
70962-EP-EPT	20 Oct 2010	10840627.3
70970-EP-EPT	04 Oct 2010	10838731.7
70983-EP-EPT	02 Feb 2010	10845141.0
70987-EP-EPT	02 Nov 2010	10827959.7
70997-EP-EPT	25 Oct 2010	10835541.3
71009-EP-EPT	29 Nov 2010	10832744.6
71012-EP-EPT	23 Dec 2009	09852487.9
71015-EP-EPT	21 Dec 2010	10805435.4
71022-EP-EPT	25 May 2010	10852072.7
71031-EP-EPT	20 Jan 2011	11746940.3

(35)

71032-EP-EPT	13 Apr 2010	10849656.3
71070-EP-EPT	17 Mar 2010	10847771.2
71084-EP-EPT	20 Apr 2011	11774510.9
71093-EP-EPT	19 Apr 2011	11774507.5
71097-EP-EPT	22 Nov 2010	10832731.3
71100-EP-EPT	13 Dec 2010	10838740.8
71104-EP-EPT	29 Dec 2009	09852718.7
71113-EP-EPT	25 Jan 2011	11739436.1
71119-EP-EPT	22 Dec 2010	10842932.5
71135-EP-EPT	30 Nov 2010	10834277.5
71143-EP-EPT	10 May 2011	11786213.6
71148-EP-EPT	18 Apr 2011	11774505.9
71155-EP-EPT	23 Dec 2009	09852484.6
71165-EP-EPT	22 Jan 2010	10843662.7
71170-EP-EPT	23 Dec 2009	09852485.3
71183-EP-EPT	16 Nov 2010	10859622.2
71194-EP-EPT	31 Dec 2009	09852743.5
71201-EP-EPT	12 Mar 2010	10847315.8
71209-EP-EPT	25 Nov 2010	10837098.2
71212-EP-EPT	17 Jun 2010	10853067.6
71219-EP-EPT	11 Mar 2010	10847200.2
71223-EP-EPT	19 Jan 2010	10843652.8
71229-EP-EPT	22 Dec 2010	10838818.2
71233-EP-EPT	07 Dec 2009	09852003.4
71240-EP-EPT	23 Dec 2010	10840691.9
71241-EP-EPT	02 Feb 2010	10845139.4
71243-EP-EPT	22 Nov 2010	10835544.7
71267-EP-EPT	06 Apr 2010	10849252.1
71278-EP-EPT	21 Dec 2010	10840686.9
71280-EP-EPT	16 Dec 2010	10837155.0
71282-EP-EPT	15 Dec 2010	10837106.3
71288-EP-EPT	26 Feb 2010	10846395.1
71289-EP-EPT	15 Jun 2011	11797662.1
71291-EP-EPT	10 Dec 2010	10835597.5
71296-EP-EPT	21 Jan 2010	10843784.9
71299-EP-EPT	27 Jan 2011	11741942.4
71306-EP-EPT	09 Jun 2011	11797660.5
71307-EP-EPT	11 Jan 2010	10842022.5
71308-EP-EPT	31 Dec 2009	09852741.9
71313-EP-EPT	31 Dec 2009	09852747.6
71320-EP-EPT	28 Jan 2011	11758872.3
71328-EP-EPT	23 Dec 2009	09852441.6
71331-EP-EPT	01 Apr 2011	11762110.2
71335-EP-EPT	18 Dec 2009	09810899.6
71346-EP-EPT	26 Mar 2010	10848167.2
71371-EP-EPT	21 Dec 2009	09852489.5
71376-EP-EPT	11 Feb 2010	10845627.8
71384-EP-EPT	16 Jun 2011	11797664.7
71392-EP-EPA	20 Jan 2011	11151521.9
71393-EP-EPT	18 Mar 2011	11762069.0
71404-EP-EPT	15 Mar 2011	11755768.6

71407-EP-EPT	29 Jan 2010	10844371.4
71420-EP-EPT	05 Jul 2011	11806373.4
71426-EP-EPT	30 Mar 2011	11774464.9
71430-EP-EPT	15 Feb 2011	11758873.1
71434-EP-EPT	23 Mar 2010	10848176.3
71449-EP-EPT	26 Feb 2010	10846393.6
71455-EP-EPT	29 Dec 2010	10861435.5
71460-EP-EPT	28 Sep 2010	10857755.2
71461-EP-EPT	28 Jan 2011	11744311.9
71462-EP-EPT	10 Feb 2011	11744315.0
71464-EP-EPT	03 Feb 2011	11744313.5
71466-EP-EPT	23 Feb 2010	10846405.8
71489-EP-EPT	09 Feb 2011	11750236.9
71491-EP-EPT	25 Jun 2010	10853570.9
71497-EP-EPT	04 Feb 2011	11765126.5
71501-EP-EPT	27 Apr 2011	11774515.8
71503-EP-EPT	18 Feb 2010	10846021.3
71510-EP-EPT	06 Sep 2011	11826456.3
71515-EP-EPT	20 Jan 2010	10843654.4
71518-EP-EPT	26 Jan 2011	11736691.4
71523-EP-EPT	04 Feb 2010	10845021.4
71527-EP-EPT	08 Mar 2010	10847190.5
71527-EP-ETD	14 Jan 2013	13151110.7
71528-EP-EPT	26 Jan 2011	11736693.0
71530-EP-EPT	02 Mar 2011	11750272.4
71534-EP-EPT	06 Jun 2011	11792026.4
71552-EP-EPT	25 Jan 2011	11736686.4
71567-EP-EPT	01 Feb 2011	11762065.8
71570-EP-EPT	28 Jul 2011	11817843.3
71571-EP-EPT	01 Jun 2010	10852457.0
71586-EP-EPT	14 Apr 2011	11774467.2
71587-EP-EPT	09 Feb 2010	10845635.1
71588-EP-EPT	24 Mar 2010	10848295.1
71591-EP-EPT	24 Mar 2010	10848287.8
71592-EP-EPT	17 Feb 2010	10846025.4
71601-EP-EPT	04 Feb 2011	11762066.6
71602-EP-EPT	07 Jan 2011	11731721.4
71607-EP-EPT	27 Dec 2010	10846020.5
71610-EP-EPT	27 May 2010	10852067.7
71611-EP-EPT	27 May 2010	10852068.5
71623-EP-EPT	07 Jan 2011	11731722.2
71626-EP-EPT	10 Feb 2011	11786179.9
71627-EP-EPT	07 Oct 2011	11830259.5
71635-EP-EPT	02 Sep 2011	11823135.6
71637-EP-EPT	15 Jan 2010	10842837.6
71652-EP-EPT	23 Mar 2011	11786180.7
71653-EP-EPT	20 Apr 2011	11783132.1
71661-EP-EPT	10 Mar 2010	10847314.1
71662-EP-EPT	04 Apr 2011	11762111.0
71673-EP-EPT	07 Jun 2011	11800238.5
71680-EP-EPT	27 Apr 2010	10850625.4

71688-EP-EPT	03 Nov 2010	10842931.7
71708-EP-EPT	17 Mar 2011	11774463.1
71740-EP-EPT	01 Apr 2010	10848802.4
71756-EP-EPT	03 Feb 2010	10845019.8
71762-EP-EPT	11 Feb 2011	11741968.9
71763-EP-EPT	17 Jan 2011	11732730.4
71791-EP-EPT	29 Jan 2010	10844381.3
71792-EP-EPT	29 Jan 2010	10844372.2
71802-EP-EPT	27 Jul 2011	11817841.7
71819-EP-EPT	25 Mar 2010	10848297.7
71820-EP-EPT	08 Dec 2010	10860494.3
71832-EP-EPT	26 Mar 2010	10848190.4
71843-EP-EPT[2]	17 Oct 2011	11853285.2
71857-EP-EPT	31 Aug 2010	10856636.5
71881-EP-EPT	10 Feb 2011	11800229.4
71882-EP-EPT	10 Feb 2011	11800230.2
71888-EP-EPT	25 Jul 2011	11819466.1
71900-EP-EPT	04 Mar 2011	11758876.4
71915-EP-EPT	18 Apr 2011	11774472.2
71919-EP-EPT	16 May 2011	11797698.5
71921-EP-EPT	05 Mar 2010	10709608.3
71925-EP-EPT	31 Mar 2011	11762109.4
71926-EP-EPT	04 Apr 2011	11786181.5
71927-EP-EPT	28 Apr 2010	10722973.4
71928-EP-EPT	29 Mar 2010	10848672.1
71936-EP-EPT	30 Mar 2011	11768505.7
71954-EP-EPT	11 May 2010	10851208.8
71957-EP-EPT	16 Feb 2011	11744321.8
71964-EP-EPT	15 Apr 2011	11768552.9
71976-EP-EPT	08 Feb 2011	11739487.4
71979-EP-EPT	18 Oct 2011	11853532.7
71991-EP-EPT	27 May 2010	10851961.2
71992-EP-EPT	25 Mar 2010	10848298.5
71994-EP-EPT	18 Mar 2010	10847772.0
71995-EP-EPT	01 Jun 2010	10852467.9
72009-EP-EPT	28 Mar 2011	11762071.6
72012-EP-EPT	22 Nov 2010	10845629.4
72018-EP-EPT	19 Mar 2010	10847775.3
72022-EP-EPT	08 Aug 2011	11835680.7
72024-EP-EPT	13 May 2011	11780300.7
72027-EP-EPT	12 May 2011	11780297.5
72047-EP-EPT	13 Apr 2010	10849764.5
72062-EP-EPT	21 May 2010	10851695.6
72074-EP-EPT	30 May 2011	11791986.0
72075-EP-EPT	22 Apr 2011	11771679.5
72077-EP-EPT	08 Jun 2010	10852801.9
72080-EP-EPT	29 Mar 2011	11768504.0
72081-EP-EPT	07 Oct 2011	11833916.7
72085-EP-EPT	21 Feb 2011	11744347.3
72086-EP-EPT	21 Jun 2011	11811883.5
72092-EP-EPT	29 Jun 2010	10854013.9

72093-EP-EPT	30 Jun 2011	11800289.8
72096-EP-EPT	01 Apr 2011	11777321.8
72111-EP-EPT	11 May 2011	11786182.3
72124-EP-EPT	03 Mar 2011	11758875.6
72127-EP-EPT	14 Feb 2011	11755741.3
72128-EP-EPT	01 Apr 2011	11774465.6
72131-EP-EPT	24 Mar 2011	11758878.0
72135-EP-EPT	30 Mar 2011	11795234.1
72136-EP-EPT	16 Jun 2010	10853160.9
72144-EP-EPT	15 Mar 2011	11755769.4
72145-EP-EPT	17 May 2011	11783153.7
72146-EP-EPT	04 May 2011	11780286.8
72153-EP-EPT	04 Jul 2011	11803218.4
72155-EP-EPT	04 Jul 2011	11803219.2
72157-EP-EPT	01 Apr 2010	10848803.2
72158-EP-EPT	24 Mar 2011	11765128.1
72160-EP-EPT	20 Apr 2010	10850157.8
72177-EP-EPT	09 Aug 2011	11824631.3
72194-EP-EPT	16 Feb 2011	11750237.7
72199-EP-EPT	26 Jun 2011	11797690.2
72204-EP-EPT	20 Jul 2010	10854981.7
72205-EP-EPT	02 May 2011	11774528.1
72215-EP-EPT	22 Apr 2010	10850155.2
72216-EP-EPT	22 Feb 2011	11752911.5
72217-EP-EPT	22 Jun 2011	11800271.6
72227-EP-EPT	21 May 2010	10851686.5
72238-EP-EPT	15 Feb 2011	11768501.6
72244-EP-EPT	26 May 2011	11797657.1
72252-EP-EPT	14 Apr 2010	10849765.2
72256-EP-EPT	12 Apr 2010	10849761.1
72266-EP-EPT	13 May 2010	10851326.8
72283-EP-EPT	03 Mar 2011	11762068.2
72284-EP-EPT	04 May 2011	11811882.7
72288-EP-EPT	28 Jul 2010	10855247.2
72294-EP-EPT	22 Aug 2011	11819495.0
72297-EP-EPT	11 Aug 2011	11817814.4
72298-EP-EPT	16 Jun 2011	11811902.3
72305-EP-EPT	01 Apr 2011	11765132.3
72323-EP-EPT	08 Feb 2011	11762067.4
72325-EP-EPT	11 May 2011	11786183.1
72329-EP-EPT	11 Apr 2011	11768506.5
72345-EP-EPT	26 Apr 2010	10850624.7
72351-EP-EPT	23 Mar 2011	11758903.6
72364-EP-EPT	30 Apr 2010	10850507.4
72366-EP-EPT	03 Dec 2010	10860162.6
72369-EP-EPA	22 Jul 2011	11175085.7
72378-EP-EPT	19 May 2010	10851691.5
72379-EP-EPT	19 May 2010	10851692.3
72380-EP-EPT	19 May 2010	10851693.1
72381-EP-EPT	23 Jun 2010	10853565.9
72384-EP-EPT	19 Jun 2010	10853158.3

72388-EP-EPT	11 Apr 2011	11768507.3
72394-EP-EPT	12 Apr 2011	11777322.6
72400-EP-EPT	13 Apr 2011	11783131.3
72402-EP-EPT	02 Jul 2010	10854021.2
72405-EP-EPT	28 Mar 2011	11768503.2
72406-EP-EPT	26 May 2011	11795235.8
72424-EP-EPT	10 Feb 2011	11789307.3
72426-EP-EPT	16 May 2011	11795265.5
72427-EP-EPT	10 May 2010	10851202.1
72428-EP-EPT	07 Jun 2011	11797659.7
72429-EP-EPT	09 Aug 2011	11816166.0
72430-EP-EPT	24 May 2011	11786189.8
72433-EP-EPT	18 Mar 2011	11783129.7
72434-EP-EPT	24 Feb 2011	11777317.6
72437-EP-EPT	13 Jun 2011	11806352.8
72438-EP-EPT	06 May 2010	10851031.4
72440-EP-EPT	25 Mar 2011	11762070.8
72444-EP-EPT	20 Oct 2010	10858580.3
72460-EP-EPT	15 Apr 2011	11768553.7
72474-EP-EPT	05 Apr 2011	11765151.3
72476-EP-EPT	21 Sep 2011	11835711.0
72502-EP-EPT	20 Oct 2011	11854359.4
72508-EP-EPT	07 Apr 2010	10849265.3
72519-EP-EPT	27 May 2011	11795236.6
72520-EP-EPT	13 Jun 2011	11806353.6
72529-EP-EPT	28 Jun 2010	10854003.0
72531-EP-EPT	10 Jun 2010	10852694.8
72543-EP-EPT	19 Jul 2011	11811885.0
72547-EP-EPT	29 Jun 2010	10853874.5
72553-EP-EPT	14 Sep 2010	10857124.1
72599-EP-EPT	28 Jun 2010	10854004.8
72609-EP-EPT	30 Jun 2010	10853891.9
72611-EP-EPT	12 Aug 2011	11821196.0
72614-EP-EPT	10 Nov 2011	11852928.8
72623-EP-EPT	16 Aug 2010	10856019.4
72631-EP-EPT	29 Aug 2011	11821205.9
72634-EP-EPT	21 Apr 2011	11771677.9
72635-EP-EPT	29 Aug 2011	11821182.0
72648-EP-EPT	13 Apr 2011	11783130.5
72693-EP-EPT	17 Jun 2011	11795289.5
72695-EP-EPT	13 Apr 2011	11774466.4
72705-EP-EPA	03 Jun 2011	11168654.9
72729-EP-EPA	30 Dec 2010	10197372.5
72732-EP-EPT	01 Jul 2010	10854009.7
72734-EP-EPT	13 Jun 2011	11828186.4
72740-EP-EPT	01 Jun 2011	11800236.9
72742-EP-EPT	20 Oct 2010	10858573.8
72748-EP-EPT	02 May 2011	11780262.9
72770-EP-EPT	01 Jul 2010	10854008.9
72775-EP-EPT	20 Jan 2011	11855978.0
72777-EP-EPT	31 May 2011	11795238.2

72789-EP-EPT	14 Apr 2011	11774469.8
72790-EP-EPT	14 Apr 2011	11774470.6
72840-EP-EPT	10 Feb 2011	11783125.5
72844-EP-EPT	23 Mar 2011	11795232.5
72847-EP-EPT	30 Apr 2011	11774527.3
72848-EP-EPT	06 Jul 2011	11803221.8
72858-EP-EPT	08 Jul 2010	10854370.3
72861-EP-EPT	23 Aug 2011	11819499.2
72867-EP-EPT	16 Nov 2011	11841366.5
72868-EP-EPT	17 May 2011	11800231.0
72889-EP-EPT	13 Aug 2010	10855786.9
72892-EP-EPT	11 May 2011	11780295.9
72899-EP-EPT	06 May 2011	11789308.1
72902-EP-EPT	26 May 2011	11786221.9
72944-EP-EPT	28 May 2010	10852074.3
72965-EP-EPT	02 Aug 2011	11817812.8
72966-EP-EPA	22 Jun 2011	11170859.0
72968-EP-EPA	26 May 2011	11167621.9
72969-EP-EPT	13 Oct 2010	10858359.2
72995-EP-EPT	22 Feb 2001	01925106.5
72996-EP-EPT	20 Sep 2010	10857429.4
73001-EP-EPA	06 May 2011	11165025.5
73002-EP-EPT	10 Feb 2011	11783126.3
73003-EP-EPT	10 Feb 2011	11783128.9
73004-EP-EPT	10 Feb 2011	11783127.1
73013-EP-EPT	27 May 2011	11800234.4
73015-EP-EPT	08 Aug 2011	11826452.2
73017-EP-EPT	06 Oct 2010	10858065.5
73032-EP-EPT	17 May 2011	11800232.8
73035-EP-EPT	30 Aug 2010	10856564.9
73052-EP-EPT	03 Oct 2011	11837621.9
73063-EP-EPT	17 Sep 2010	10857144.9
73067-EP-EPT	20 Sep 2010	10857481.5
73074-EP-EPT	04 Aug 2003	03767153.4
73075-EP-EPT	18 Mar 2004	04757619.4
73077-EP-EPT	12 Feb 2007	07750597.2
73094-EP-EPT	23 Aug 2010	10856345.3
73098-EP-EPT	17 Jun 2010	10853068.4
73115-EP-EPT	21 Jul 2011	11809364.0
73118-EP-EPT	09 Jun 2011	11800269.0
73131-EP-EPT	23 Aug 2011	11819502.3
73140-EP-EPT	23 Aug 2010	10848299.3
73151-EP-EPT[2]	02 Jun 2010	10852358.0
73156-EP-EPT	25 Nov 2010	10859951.5
73170-EP-EPT	13 Aug 2010	10855844.6
73214-EP-EPA	22 Aug 2011	11178212.4
73216-EP-EPT	24 Aug 2011	11819473.7
73226-EP-EPT	02 Aug 2011	11819468.7
73238-EP-EPT	11 Jun 2010	10852817.5
73239-EP-EPT	09 Aug 2011	11816167.8
73247-EP-EPT	09 Oct 2007	07843997.3

73253-EP-EPT	23 Aug 2010	10856347.9
73256-EP-EPT	12 Aug 2010	10855769.5
73271-EP-EPT	03 Oct 2011	11837620.1
73274-EP-EPT	29 Oct 2010	10858840.1
73284-EP-EPT	19 Oct 2010	10858579.5
73288-EP-EPT	15 Nov 2010	10859707.1
73296-EP-EPT	15 Dec 2011	11848553.1
73310-EP-EPT	20 Oct 2011	11833957.1
73320-EP-EPT	24 Aug 2010	10856349.5
73333-EP-EPT	27 Aug 2010	10856355.2
73348-EP-EPT	09 Jun 2011	11797702.5
73355-EP-EPT	02 Aug 2010	10855555.8
73357-EP-EPT	19 Aug 2010	10856112.7
73381-EP-EPT	12 Nov 2010	10859393.0
73386-EP-EPT	10 Sep 2010	10856909.6
73389-EP-EPT	21 Sep 2011	11826492.8
73390-EP-EPT	17 Jun 2011	11797705.8
73406-EP-EPT	03 Oct 2011	11835687.2
73429-EP-EPT	21 Sep 2010	10857485.6
73444-EP-EPT	18 Oct 2010	10858535.7
73447-EP-EPT	08 Feb 2008	08729395.7
73449-EP-EPT	08 Feb 2008	08729381.7
73456-EP-EPT	30 Mar 2010	10720477.8
73475-EP-EPT	30 Sep 2010	10857762.8
73478-EP-EPA	05 Nov 2007	07380301.7
73480-EP-EPT	06 Jul 2011	11817837.5
73489-EP-EPT	20 Oct 2010	10858575.3
73501-EP-EPT	19 Nov 2010	10859750.1
73502-EP-EPT[2]	29 Oct 2010	10857771.9
73506-EP-EPT	23 Sep 2010	10857486.4
73514-EP-EPT	13 Sep 2010	10857202.5
73529-EP-EPT	31 Dec 2010	10861251.6
73537-EP-EPA	30 Aug 2011	11179234.7
73538-EP-EPT	13 Sep 2011	11824676.8
73539-EP-EPT	25 Aug 2011	11821164.8
73539-EP-ETD	18 Mar 2013	13159698.3
73548-EP-EPT	14 Sep 2010	10857206.6
73549-EP-EPT	06 Sep 2011	11823144.8
73566-EP-EPT	08 Aug 2011	11826453.0
73570-EP-EPT	05 Aug 2011	11826451.4
73584-EP-EPT	08 Aug 2011	11833912.6
73587-EP-EPT	01 Aug 2011	11814157.1
73588-EP-EPT	20 Jul 2010	10854980.9
73595-EP-EPT	23 Sep 2010	10857489.8
73604-EP-EPT	30 Sep 2011	11830270.2
73618-EP-EPT	19 Sep 2011	11837617.7
73627-EP-EPT	25 Nov 2010	10860076.8
73646-EP-EPT	11 Aug 2011	11817815.1
73647-EP-EPT	02 Nov 2011	11794200.3
73652-EP-EPT	05 Nov 2010	10859206.4
73655-EP-EPT	21 Sep 2011	11826496.9

73661-EP-EPT	27 Jul 2011	11811919.7
73666-EP-EPT	14 Sep 2010	10857207.4
73667-EP-EPT	30 Sep 2011	11830271.0
73669-EP-EPT	21 Sep 2011	11832182.7
73678-EP-EPT	06 Sep 2011	11847850.2
73688-EP-EPT	13 Oct 2010	10858357.6
73693-EP-EPT	04 Nov 2011	11853840.4
73695-EP-EPT	21 Sep 2010	10857439.3
73710-EP-EPT	18 Jan 2011	11856430.1
73728-EP-EPT	15 Feb 2011	11711952.9
73731-EP-EPT	06 Oct 2011	11840946.5
73742-EP-EPT	02 Aug 2011	11819467.9
73751-EP-EPT	26 Nov 2010	10860073.5
73753-EP-EPT	20 Jan 2011	11856038.2
73757-EP-EPT	21 Sep 2011	11826494.4
73768-EP-EPT	23 Dec 2010	10861144.3
73798-EP-EPT	08 Aug 2011	11824629.7
73813-EP-EPT	06 Sep 2011	11848442.7
73826-EP-EPT	23 Aug 2011	11835682.3
73836-EP-EPT	23 Sep 2011	11835685.6
73837-EP-EPT	07 Nov 2011	11840878.0
73840-EP-EPT	28 Jul 2011	11826483.7
73841-EP-EPA	07 Sep 2011	11180392.0
73845-EP-EPT	30 Aug 2011	11821206.7
73854-EP-EPT	09 Aug 2011	11821161.4
73855-EP-EPT	21 Jun 2011	11821158.0
73856-EP-EPT	21 Mar 2012	12760908.9
73862-EP-EPT	24 Aug 2011	11824632.1
73871-EP-EPT	28 Sep 2011	11844283.9
73879-EP-EPT	05 Oct 2010	10858062.2
73884-EP-EPT	08 Aug 2011	11824630.5
73887-EP-EPT	08 Aug 2011	11824628.9
73901-EP-EPT	02 Feb 2012	12761059.0
73912-EP-EPT	04 Oct 2011	11830277.7
73919-EP-EPA	24 Jan 2012	12152233.8
73936-EP-EPT	12 Sep 2011	11824633.9
73957-EP-EPT	29 Sep 2010	10857760.2
73962-EP-EPT	20 Oct 2010	10858544.9
73964-EP-EPT	14 Oct 2010	10858296.6
73965-EP-EPT	03 Oct 2011	11835686.4
73970-EP-EPT	27 Sep 2011	11828236.7
73974-EP-EPT	29 Sep 2011	11828200.3
73983-EP-EPT	01 Oct 2010	10857768.5
73988-EP-EPT	12 Nov 2010	10859518.2
74012-EP-EPT	16 Dec 2011	11852934.6
74019-EP-EPT	21 Sep 2011	11826493.6
74048-EP-EPT	09 Sep 2011	11830255.3
74049-EP-EPT	29 Mar 2012	12718280.6
74053-EP-EPT	23 Sep 2011	11826505.7
74056-EP-EPT	25 Nov 2010	10860037.0
74057-EP-EPT	31 Dec 2010	10861477.7

(41)

74065-EP-EPT	21 Oct 2010	10858582.9
74075-EP-EPT	17 Oct 2011	11841327.7
74076-EP-EPT	28 Oct 2011	11837629.2
74081-EP-EPT	31 Dec 2010	10861319.1
74085-EP-EPT	13 Dec 2010	10803374.7
74087-EP-EPT	04 Nov 2011	11844797.8
74096-EP-EPT	07 Nov 2011	11849701.5
74099-EP-EPT	12 Oct 2011	11832214.8
74107-EP-EPT	05 Jan 2011	11855192.8
74112-EP-EPT	17 Nov 2010	10859855.8
74118-EP-EPT	01 Nov 2010	10859199.1
74132-EP-EPT	25 Nov 2010	10859997.8
74137-EP-EPT	29 Dec 2011	11710335.8
74150-EP-EPT	10 Nov 2011	11844834.9
74161-EP-EPT	18 Jan 2011	11856383.2
74181-EP-EPT	12 Nov 2010	10859417.7
74182-EP-EPT	03 Dec 2010	10788307.6
74183-EP-EPT	14 Dec 2010	10860829.0
74188-EP-EPT	17 Dec 2010	10860655.9
74236-EP-EPT	10 Nov 2011	11840432.6
74241-EP-EPT	20 Dec 2010	10860939.7
74247-EP-EPT	18 Jan 2011	11856195.0
74250-EP-EPA	24 Jan 2012	12152199.1
74267-EP-EPT	14 Sep 2011	11837616.9
74268-EP-EPT	30 Jan 2011	11857101.7
74282-EP-EPT	03 Nov 2011	11844390.2
74284-EP-EPT	18 Oct 2011	11851800.0
74292-EP-EPT	24 May 2012	12805252.9
74297-EP-EPT	13 Dec 2011	11860417.2
74308-EP-EPD	17 Feb 2001	03003595.0
74317-EP-EPT	30 Jan 2012	12755153.9
74325-EP-EPT	08 Dec 2010	10860595.7
74331-EP-EPT	06 Apr 2011	11863247.0
74332-EP-EPT	08 Nov 2011	11852793.6
74359-EP-EPT	10 Nov 2011	11840275.9
74364-EP-EPA	29 Dec 2011	11196021.7
74368-EP-EPT	12 Jan 2011	11855417.9
74375-EP-EPT	08 Dec 2011	11857663.6
74385-EP-EPT	01 Feb 2011	11857688.3
74388-EP-EPT	09 Nov 2011	11850767.2
74389-EP-EPT	19 Jan 2011	11856513.4
74399-EP-EPT	17 Oct 2011	11844812.5
74403-EP-EPT	11 Jun 2012	12807202.2
74404-EP-EPT	07 Jun 2012	12807332.7
74410-EP-EPT	15 Nov 2011	11853083.1
74419-EP-EPT	22 Sep 2011	11844664.0
74420-EP-EPT	07 Nov 2011	11853632.5
74425-EP-EPT	14 Dec 2010	10796350.6
74429-EP-EPT	26 Jan 2012	12739143.1
74436-EP-EPT	09 Dec 2010	10860528.8
74453-EP-EPT	03 Dec 2010	10860255.8

74454-EP-EPT	30 May 2012	12797281.8
74460-EP-EPT	30 Mar 2011	11862022.8
74462-EP-EPT	27 Feb 2012	12751984.1
74499-EP-EPT	22 Feb 2011	11859106.4
74500-EP-EPT	07 Mar 2012	12754736.2
74504-EP-EPT	06 May 2011	11865240.3
74506-EP-EPT	02 Nov 2012	12846236.3
74508-EP-EPT	10 Dec 2010	10860434.9
74512-EP-EPT	26 Jan 2011	11857186.8
74521-EP-EPT	08 Nov 2011	11854323.0
74522-EP-EPT	03 Feb 2012	12744509.6
74527-EP-EPT	08 Dec 2011	11853359.5
74537-EP-EPT	11 Jan 2011	11855744.6
74541-EP-EPT	26 Jan 2011	11857247.8
74545-EP-EPT	26 Mar 2012	12768230.0
74546-EP-EPT	14 Jan 2011	11855853.5
74560-EP-EPT	03 Jan 2012	12702570.8
74574-EP-EPT	25 Feb 2011	11859545.3
74575-EP-EPT	07 Jan 2011	11855108.4
74603-EP-EPT	17 Jan 2012	12744380.2
74606-EP-EPT	02 Feb 2012	12742052.9
74609-EP-EPT	03 Feb 2011	11857891.3
74627-EP-EPA	22 Dec 2011	11195198.4
74634-EP-EPT	10 Dec 2010	10860443.0
74642-EP-EPT	30 Jan 2012	12741608.9
74664-EP-EPT	09 Jun 2011	11867485.2
74671-EP-EPT	22 Feb 2012	12751834.8
74683-EP-EPT	20 Dec 2011	11857956.4
74688-EP-EPT	10 Feb 2011	11858350.9
74689-EP-EPT	31 Dec 2010	10861268.0
74702-EP-EPT	25 Feb 2011	11859338.3
74705-EP-EPT	11 Jan 2012	12741501.6
74708-EP-EPT	22 Feb 2012	12752381.9
74713-EP-EPT	28 Feb 2012	12751731.6
74733-EP-EPT	09 Feb 2012	12754263.7
74746-EP-EPT	18 Jul 2011	11869670.7
74751-EP-EPT	30 Jan 2012	12757754.2
74752-EP-EPT	20 May 2011	11866402.8
74754-EP-EPT	07 Feb 2011	11858105.7
74766-EP-EPT	22 Feb 2012	12751871.0
74794-EP-EPT	12 Jan 2012	12744646.6
74817-EP-EPT	28 Jan 2011	11857119.9
74824-EP-EPT	09 May 2012	12781876.3
74837-EP-EPT	18 Mar 2011	11861394.2
74839-EP-EPT	15 Mar 2012	12765701.3
74843-EP-EPT	10 Jan 2012	12741810.1
74873-EP-EPT	28 Mar 2011	11758819.4
74876-EP-EPT	11 Jan 2012	12747809.7
74883-EP-EPT	19 Apr 2012	12773700.5
74893-EP-EPT	23 Feb 2012	12749586.9
74897-EP-EPT	04 May 2011	11864783.3

(43)

74921-EP-EPT	23 Feb 2011	11859134.6
74924-EP-EPT	27 Apr 2012	12777188.9
74925-EP-EPT	06 Jan 2012	12731927.5
74938-EP-EPT	24 May 2011	11866317.8
74942-EP-EPT	09 Feb 2012	12744350.5
74945-EP-EPA	28 Dec 2011	11195869.0
74951-EP-EPT	01 Feb 2011	11704817.3
74965-EP-EPT	24 Mar 2011	11861625.9
74970-EP-EPT	02 Feb 2012	12752796.8
74973-EP-EPA	24 May 2013	13169062.0
74975-EP-EPT	06 May 2011	11865232.0
75013-EP-EPT	17 Apr 2012	12774841.6
75019-EP-EPA	28 Mar 2012	12161740.1
75024-EP-EPT	10 Aug 2012	12828355.3
75028-EP-EPT	23 Aug 2012	12837540.9
75056-EP-EPT	14 Apr 2011	11722895.7
75060-EP-EPT	23 May 2011	11866341.8
75069-EP-EPT	15 May 2012	12792930.5
75073-EP-EPT	21 Mar 2012	12765531.4
75091-EP-EPT	03 May 2012	12789188.5
75093-EP-EPT	21 Mar 2011	11861437.9
75094-EP-EPT	18 Jun 2012	12740623.9
75112-EP-EPT	09 Dec 2011	11858167.7
75123-EP-EPT	08 Apr 2011	11863242.1
75127-EP-EPT	27 Mar 2012	12768644.2
75130-EP-EPT	01 Mar 2012	12755136.4
75136-EP-EPT	15 Apr 2011	11863701.6
75142-EP-EPT	19 Apr 2012	12782770.7
75146-EP-EPT	14 Jun 2012	12799924.1
75147-EP-EPT	27 Sep 2012	12783636.9
75148-EP-EPT	09 Jun 2012	12800301.9
75156-EP-EPT	22 Mar 2012	12764686.7
75168-EP-EPT	15 Mar 2011	11716601.7
75184-EP-EPT	06 Feb 2012	12744937.9
75186-EP-EPT	27 May 2011	11866720.3
75193-EP-EPT	03 Apr 2012	12767890.2
75201-EP-EPT	03 May 2011	11864818.7
75212-EP-EPT	07 Feb 2012	12747727.1
75215-EP-EPT	19 Mar 2012	12776621.0
75217-EP-EPT	06 Jun 2012	12804248.8
75251-EP-EPT	25 May 2011	11866286.5
75254-EP-EPT	30 Apr 2012	12782349.0
75256-EP-EPT	17 Apr 2012	12774506.5
75258-EP-EPT	30 May 2012	12792962.8
75260-EP-EPT	05 Jun 2012	12818257.3
75267-EP-EPT	15 Apr 2011	11863607.5
75268-EP-EPT	19 Apr 2011	11864037.4
75281-EP-EPT	27 Apr 2011	11864213.1
75293-EP-EPT	25 May 2011	11866214.7
75301-EP-EPT	02 Feb 2012	12763970.6
75310-EP-EPA	30 Mar 2012	12162333.4

75318-EP-EPT	26 May 2011	11866256.8
75329-EP-EPT	03 May 2011	11722478.2
75332-EP-EPT	10 Apr 2012	12774812.7
75347-EP-EPT	11 Apr 2011	11863621.6
75351-EP-EPT	05 Apr 2012	12793279.6
75353-EP-EPT	08 May 2012	12792499.1
75370-EP-EPA	13 Feb 2012	12155105.5
75393-EP-EPA	27 Feb 2012	12157025.3
75394-EP-EPT	18 Apr 2012	12786400.7
75413-EP-EPT	11 May 2012	12784924.8
75415-EP-EPT	24 Feb 2012	12768453.8
75427-EP-EPT	01 Jun 2012	12793270.5
75429-EP-EPT	23 Jan 2012	12771703.1
75453-EP-EPT	17 Apr 2012	12774335.9
75454-EP-EPT	17 Apr 2012	12774078.5
75459-EP-EPT	25 May 2012	12792471.0
75506-EP-EPT	09 May 2012	12785590.6
75507-EP-EPT	01 Jul 2011	11869187.2
75511-EP-EPT	26 Apr 2012	12782245.0
75516-EP-EPT	27 Jun 2011	11868556.9
75521-EP-EPT	30 Apr 2012	12782629.5
75524-EP-EPT	05 Apr 2011	11863215.7
75529-EP-EPT	10 May 2011	11865297.3
75530-EP-EPT	05 Jun 2012	12733787.1
75532-EP-EPT	05 Jun 2012	12805220.6
75538-EP-EPT	28 Jun 2011	11868541.1
75555-EP-EPT	03 May 2012	12802758.8
75562-EP-EPT	27 May 2011	11866497.8
75563-EP-EPT	16 Mar 2012	12715413.6
75572-EP-EPT	15 Jun 2011	11867958.8
75575-EP-EPT	14 Sep 2011	11872333.7
75576-EP-EPT	13 Apr 2011	11863689.3
75599-EP-EPT	03 May 2012	12789467.3
75618-EP-EPA	02 May 2012	12166381.9
75630-EP-EPT	10 Jun 2011	11867438.1
75646-EP-EPT	29 May 2012	12805137.2
75676-EP-EPT	20 Jul 2012	12819887.6
75677-EP-EPT	25 May 2011	11865960.6
75684-EP-EPT	19 Apr 2011	11863737.0
75698-EP-EPT	14 Jun 2011	11867980.2
75699-EP-EPT	30 Apr 2012	12779574.8
75700-EP-EPT	20 May 2011	11866401.0
75702-EP-EPT	29 Jun 2011	11868502.3
75706-EP-EPT	28 Jun 2012	12817732.6
75725-EP-EPT	26 Jul 2012	12819704.3
75732-EP-EPT	03 Apr 2012	12794054.2
75746-EP-EPT	29 May 2012	12797233.9
75748-EP-EPT	22 May 2012	12804377.5
75750-EP-EPT	01 Jul 2011	11869179.9
75751-EP-EPD	17 Dec 2013	13197783.7
75751-EP-EPT	28 Apr 2011	11864519.1

75765-EP-EPT	30 May 2012	12801039.4
75769-EP-EPT	19 Jun 2012	12803717.3
75772-EP-EPT	21 Jun 2011	11868268.1
75776-EP-EPT	24 Jul 2012	12819689.6
75781-EP-EPT	09 May 2011	11718114.9
75796-EP-EPT	18 Oct 2011	11874182.6
75797-EP-EPT	31 Oct 2011	11875048.8
75798-EP-EPT	06 Jul 2011	11869124.5
75800-EP-EPT	28 Jun 2011	11868576.7
75802-EP-EPT	27 Jun 2012	12805007.7
75804-EP-EPT	12 Jun 2012	12804488.0
75808-EP-EPT	08 May 2012	12724352.5
75825-EP-EPT	28 Jun 2011	11868778.9
75827-EP-EPT	24 Jul 2012	12819907.2
75833-EP-EPT	30 Nov 2011	11876853.0
75838-EP-EPT	21 Jun 2011	11868150.1
75843-EP-EPT	15 May 2012	12802962.6
75865-EP-EPT	14 Aug 2012	12824459.7
75874-EP-EPT	08 May 2012	12785693.8
75883-EP-EPT	20 Apr 2012	12782408.4
75885-EP-EPT	06 Jul 2012	12748041.6
75886-EP-EPT	10 Oct 2012	12852852.8
75896-EP-EPT	17 Jul 2012	12814568.7
75902-EP-EPT	23 Nov 2011	11876215.2
75906-EP-EPT	06 Jun 2012	12801284.6
75909-EP-EPT	15 May 2012	12785666.4
75913-EP-EPT	24 Apr 2012	12788981.4
75915-EP-EPT	29 Mar 2012	12786792.7
75918-EP-EPT	07 Jul 2011	11746622.7
75920-EP-EPT	03 Aug 2012	12821847.6
75923-EP-EPT	07 Jun 2011	11867306.0
75930-EP-EPT	15 Jul 2011	11869681.4
75940-EP-EPT	29 May 2012	12803830.4
75941-EP-EPT	30 Aug 2011	11871557.2
75961-EP-EPT	30 Jun 2011	11868478.6
75972-EP-EPT	01 Aug 2012	12820084.7
75981-EP-EPT	08 Jul 2011	11869332.4
75985-EP-EPT	22 Jun 2011	11868343.2
75988-EP-EPT	30 Jun 2011	11868497.6
75989-EP-EPT	16 Jun 2011	11867914.1
76002-EP-EPT	04 Aug 2011	11870333.9
76007-EP-EPT	20 Aug 2012	12826203.7
76013-EP-EPT	08 Jun 2012	12817460.4
76014-EP-EPT	08 Sep 2011	11872039.0
76016-EP-EPT	31 Jul 2012	12825324.2
76035-EP-EPT	01 Jul 2011	11868944.7
76036-EP-EPT	03 Nov 2011	11874884.7
76037-EP-EPT	27 Jun 2012	12818178.1
76040-EP-EPT	29 Aug 2012	12832837.4
76043-EP-EPT	31 May 2012	12792481.9
76044-EP-EPT	09 Sep 2011	11871947.5

76056-EP-EPT	08 Jun 2012	12821728.8
76061-EP-EPT	02 Aug 2012	12827484.2
76073-EP-EPT	29 Jun 2011	11868615.3
76079-EP-EPT	22 Sep 2011	11872765.0
76081-EP-EPT	28 Aug 2012	12828340.5
76124-EP-EPT	29 Jun 2012	12811954.2
76132-EP-EPT	30 Sep 2011	11873096.9
76152-EP-EPT	05 Sep 2011	11871979.8
76158-EP-EPT	29 Jun 2012	12815270.9
76165-EP-EPT	21 Feb 2013	13751544.1
76188-EP-EPT	24 Jul 2012	12822458.1
76205-EP-EPT	16 Jul 2012	12815413.5
76206-EP-EPT	16 Jul 2012	12814612.3
76215-EP-EPT	14 Oct 2011	11873915.0
76219-EP-EPT	21 Aug 2012	12833220.2
76239-EP-EPT	16 Sep 2011	11872499.6
76250-EP-EPT	30 Aug 2012	12829087.1
76261-EP-EPT	13 Oct 2011	11873822.8
76262-EP-EPT	30 Oct 2012	12845159.8
76268-EP-EPT	30 Nov 2012	12864388.9
76291-EP-EPT	09 Jan 2012	12834053.6
76292-EP-EPT	22 Aug 2011	11871285.0
76302-EP-EPT	23 Aug 2012	12831197.4
76307-EP-EPT	31 Aug 2012	12831753.4
76313-EP-EPT	04 Jul 2012	12807700.5
76315-EP-EPT	30 Nov 2012	12864108.1
76316-EP-EPT	03 Dec 2012	12867364.7
76337-EP-EPT	12 Aug 2011	11871074.8
76341-EP-EPT	20 Aug 2012	12827838.9
76345-EP-EPT	26 Jul 2011	11870102.8
76352-EP-EPT	29 Oct 2012	12846674.5
76359-EP-EPT	02 Oct 2012	12838616.6
76360-EP-EPT	31 Aug 2011	11871572.1
76369-EP-EPT	16 Sep 2011	11872487.1
76375-EP-EPT	13 Oct 2011	11874098.4
76383-EP-EPT	13 Jul 2012	12815067.9
76387-EP-EPT	22 Oct 2012	12843765.4
76388-EP-EPT	16 Oct 2012	12842839.8
76397-EP-EPT	22 Aug 2012	12838095.3
76403-EP-EPT	27 Sep 2011	11872900.3
76424-EP-EPT	17 Oct 2011	11874369.9
76439-EP-EPT	05 Oct 2012	12840740.0
76450-EP-EPT	03 Aug 2012	12834989.1
76458-EP-EPT	31 Aug 2012	12828190.4
76459-EP-EPT	30 Aug 2012	12826898.4
76460-EP-EPT	09 Aug 2012	12826767.1
76468-EP-EPT	12 Sep 2011	11872199.2
76469-EP-EPT	25 Oct 2011	11874464.8
76470-EP-EPT	25 Sep 2012	12836228.2
76471-EP-EPT	24 Oct 2012	12845474.1
76476-EP-EPT	23 Oct 2012	12842886.9

(17)

76476-EP-EPT[2]	23 Oct 2012	12844546.7
76480-EP-EPT	15 Sep 2011	11872485.5
76485-EP-EPT	09 Sep 2011	11871998.8
76491-EP-EPT	05 Feb 2013	13755746.8
76511-EP-EPT	20 Nov 2012	12859028.8
76522-EP-EPT	24 Sep 2012	12843410.7
76524-EP-EPA	31 Jul 2012	12178580.2
76525-EP-EPT	31 Oct 2011	11874957.1
76527-EP-EPT	31 Aug 2011	11871399.9
76541-EP-EPT	05 Dec 2012	12857821.8
76565-EP-EPT	15 Mar 2012	12714846.8
76570-EP-EPT	25 Oct 2011	11871297.5
76580-EP-EPT	02 Nov 2011	11875005.8
76585-EP-EPT	06 Sep 2012	12844004.7
76590-EP-EPT	31 Jan 2013	13752519.2
76600-EP-EPT	22 Aug 2012	12836790.1
76615-EP-EPT	12 Nov 2012	12860734.8
76619-EP-EPT	08 Oct 2012	12851750.5
76620-EP-EPT	04 Oct 2011	11773739.5
76627-EP-EPT	13 Jun 2012	12730316.2
76628-EP-EPT	02 Dec 2011	11876557.7
76629-EP-EPT	09 Dec 2011	11877050.2
76630-EP-EPT	27 Oct 2011	11874615.5
76638-EP-EPT	07 Oct 2011	11873782.4
76642-EP-EPT	17 Oct 2012	12851984.0
76645-EP-EPT	25 Oct 2011	11874853.2
76650-EP-EPT	25 Oct 2012	12854032.5
76663-EP-EPT	10 Nov 2011	11875410.0
76667-EP-EPT	30 Nov 2011	11876446.3
76670-EP-EPT	21 Sep 2012	12833990.0
76672-EP-EPT	08 Aug 2012	12835651.6
76681-EP-EPT	25 Oct 2012	12851764.6
76695-EP-EPT	30 Sep 2011	11873295.7
76704-EP-EPT	15 Mar 2012	12711269.6
76707-EP-EPT	16 Nov 2012	12850127.7
76710-EP-EPT	02 Dec 2011	11876544.5
76712-EP-EPT	07 Sep 2012	12835330.7
76713-EP-EPT	31 Oct 2012	12853186.0
76717-EP-EPT	04 Dec 2012	12856435.8
76718-EP-EPT	23 Apr 2012	12875556.8
76719-EP-EPT	31 Oct 2011	11875098.3
76720-EP-EPT	25 Sep 2012	12837493.1
76721-EP-EPT	20 Aug 2012	12841177.4
76724-EP-EPT	08 May 2012	12876375.2
76729-EP-EPT	09 Aug 2012	12836481.7
76740-EP-EPT	16 Dec 2011	11877604.6
76745-EP-EPT	28 Sep 2012	12837203.4
76755-EP-EPT	05 Feb 2013	13749804.4
76756-EP-EPT	24 Oct 2012	12853027.6
76757-EP-EPT	09 Oct 2012	12841000.8
76762-EP-EPT	05 Oct 2012	12840709.5

76764-EP-EPT	29 Sep 2011	11767414.3
76767-EP-EPT	09 Oct 2012	12787754.6
76768-EP-EPT	31 Oct 2012	12799230.3
76777-EP-EPT	15 Oct 2012	12787755.3
76781-EP-EPT	01 Dec 2011	11876828.2
76788-EP-EPA	05 Dec 2012	12195573.6
76791-EP-EPT	19 Oct 2012	12842080.9
76808-EP-EPT	20 Dec 2011	11877991.7
76816-EP-EPT	05 Dec 2012	12856072.9
76832-EP-EPT	16 May 2012	12876700.1
76843-EP-EPT	08 Dec 2011	11876899.3
76849-EP-EPT	19 Nov 2012	12852718.1
76851-EP-EPT	07 Dec 2011	11877033.8
76864-EP-EPT	30 Jan 2013	13712907.8
76870-EP-EPT	07 Dec 2012	12856426.7
76874-EP-EPT	10 Dec 2012	12859100.5
76904-EP-EPT	19 Oct 2012	12853773.5
76920-EP-EPT	10 Nov 2011	11875453.0
76931-EP-EPT	17 Oct 2012	12854159.6
76932-EP-EPA	18 Jan 2013	13151761.7
76933-EP-EPT	23 Dec 2011	11878009.7
76941-EP-EPT	03 Dec 2012	12859504.8
76946-EP-EPT	10 Nov 2011	11875412.6
76951-EP-EPT	23 Dec 2011	11878233.3
76962-EP-EPT	22 Feb 2012	12869067.4
76963-EP-EPA	13 Sep 2012	12184175.3
76965-EP-EPT	03 Oct 2012	12845019.4
76970-EP-EPT	16 Dec 2011	11877277.1
76976-EP-EPT	24 Feb 2012	12869132.6
76978-EP-EPT	29 Feb 2012	12870204.0
76980-EP-EPT	23 Jan 2012	12866822.5
76987-EP-EPT	04 Feb 2013	13707196.5
76988-EP-EPT	23 Apr 2013	13722791.4
76989-EP-EPA	17 Oct 2012	12188756.6
76995-EP-EPA	14 Sep 2012	12184349.4
76999-EP-EPT	24 Jan 2013	13740861.3
77000-EP-EPT	21 Oct 2011	11874346.7
77003-EP-EPT	23 Jan 2013	13751596.1
77009-EP-EPT	23 Dec 2011	11877727.5
77029-EP-EPT	04 Nov 2011	11875022.3
77031-EP-EPT	18 Dec 2012	12824802.8
77043-EP-EPT	02 Oct 2012	12841041.2
77044-EP-EPT	02 Oct 2012	12842042.9
77050-EP-EPT	21 Mar 2012	12871972.1
77051-EP-EPT	13 Dec 2012	12859487.6
77053-EP-EPT	27 Sep 2012	12846276.9
77057-EP-EPT	15 Mar 2012	12711265.4
77064-EP-EPT	05 Dec 2012	12856303.8
77065-EP-EPT	14 Dec 2012	12856754.2
77068-EP-EPT	19 Dec 2012	12813067.1
77071-EP-EPT	22 Dec 2011	11878175.6

49

77072-EP-EPT	02 Dec 2011	11876794.6
77074-EP-EPT	20 Dec 2011	11878190.5
77091-EP-EPT	23 Dec 2011	11877879.4
77096-EP-EPT	14 Dec 2012	12860577.1
77099-EP-EPT	21 Nov 2012	12852715.7
77104-EP-EPT	09 Nov 2012	12863506.7
77126-EP-EPT	19 Sep 2012	12843648.2
77129-EP-EPT	03 Feb 2012	12867320.9
77133-EP-EPT	18 Dec 2012	12813063.0
77135-EP-EPT	09 Feb 2012	12867986.7
77138-EP-EPT	31 Oct 2012	12846092.0
77140-EP-EPT	31 Oct 2012	12846705.7
77148-EP-EPT	31 Oct 2012	12845852.8
77170-EP-EPA	22 Dec 2011	11195346.9
77175-EP-EPT	13 Feb 2012	12868489.1
77189-EP-EPT	25 Jan 2013	13746532.4
77193-EP-EPT	14 Jan 2013	13738365.9
77195-EP-EPT	20 Dec 2012	12868616.9
77198-EP-EPT	02 Nov 2012	12845839.5
77201-EP-EPT	20 Dec 2012	12859128.6
77205-EP-EPT	31 Oct 2012	12845293.5
77210-EP-EPT	22 Dec 2011	11878157.4
77215-EP-EPT	29 Mar 2012	12872916.7
77220-EP-EPT	13 Feb 2013	13751403.0
77225-EP-EPT	07 Feb 2012	12867969.3
77227-EP-EPT	15 Mar 2012	12711264.7
77236-EP-EPT	07 Dec 2012	12855523.2
77253-EP-EPT	18 Apr 2012	12874814.2
77255-EP-EPT	07 Mar 2013	13772166.8
77265-EP-EPT	24 Oct 2012	12850453.7
77267-EP-EPT	21 Mar 2012	12872051.3
77274-EP-EPT	28 Jan 2013	13748915.9
77275-EP-EPT	17 Feb 2012	12868546.8
77281-EP-EPT	26 Oct 2012	12857496.9
77285-EP-EPT	12 Mar 2012	12871205.6
77292-EP-EPT	07 Nov 2012	12847061.4
77297-EP-EPT	20 Feb 2013	13751997.1
77310-EP-EPT	23 Nov 2012	12795391.7
77311-EP-EPT	28 Jan 2013	13746345.1
77312-EP-EPT	21 Feb 2013	13718892.6
77332-EP-EPT	04 Dec 2012	12858746.6
77335-EP-EPT	12 Jul 2012	12881027.2
77348-EP-EPT	14 Nov 2012	12849948.0
77352-EP-EPT	22 Dec 2011	11878138.4
77358-EP-EPA	08 Feb 2008	08151229.5
77359-EP-EPA	07 Apr 2008	08006936.2
77365-EP-EPT	14 Dec 2011	11877392.8
77393-EP-EPT	15 Mar 2012	12711008.8
77397-EP-EPT	15 Mar 2012	12714847.6
77414-EP-EPT	18 Dec 2012	12813062.2
77415-EP-EPT	19 Dec 2012	12813064.8

77420-EP-EPT	19 Dec 2011	11877658.2
77424-EP-EPT	19 Dec 2011	11877931.3
77433-EP-EPT	19 Apr 2012	12874620.3
77436-EP-EPT	30 Nov 2012	12862371.7
77455-EP-EPT	06 Feb 2012	12867929.7
77458-EP-EPT	22 Feb 2012	12869086.4
77459-EP-EPT	18 Jan 2013	13752110.0
77462-EP-EPT	21 Dec 2011	11877687.1
77467-EP-EPT	25 Oct 2012	12853270.2
77474-EP-EPT	14 Dec 2011	11877415.7
77477-EP-EPT	21 Dec 2011	11877878.6
77479-EP-EPT	28 Dec 2012	12813069.7
77481-EP-EPT	24 Feb 2012	12717916.6
77484-EP-EPT	07 Feb 2012	12867887.7
77487-EP-EPT	16 Jan 2013	13741074.2
77497-EP-EPT	29 Jan 2013	13743853.7
77511-EP-EPT	14 Mar 2012	12871453.2
77518-EP-EPT	30 Dec 2011	11878808.2
77519-EP-EPT	26 Jan 2012	12866908.2
77520-EP-EPT	29 Jan 2013	13743016.1
77526-EP-EPT	23 Mar 2012	12871642.0
77529-EP-EPT	13 Mar 2012	12871162.9
77542-EP-EPT	15 Feb 2013	13709957.8
77546-EP-EPT	05 Dec 2012	12857854.9
77554-EP-EPT	19 Dec 2012	12865368.0
77557-EP-EPT	28 Jan 2013	13755836.7
77560-EP-EPT	07 Jan 2013	13743068.2
77566-EP-EPT	15 Mar 2012	12714848.4
77573-EP-EPT	30 Jan 2012	12867621.0
77574-EP-EPT	18 Feb 2013	13760400.5
77581-EP-EPT	15 Mar 2012	12870948.2
77582-EP-EPT	31 Jan 2012	12867258.1
77592-EP-EPT	05 Apr 2012	12873663.4
77593-EP-EPT	27 Feb 2012	12870102.6
77598-EP-EPT	08 May 2012	12876365.3
77610-EP-EPT	08 Mar 2013	13761534.0
77628-EP-EPT	22 Feb 2012	12869032.8
77632-EP-EPT	04 Mar 2013	13719307.4
77635-EP-EPT	28 Jan 2013	13705201.5
77637-EP-EPT	28 Jan 2013	13705200.7
77643-EP-EPT	31 Dec 2011	11879034.4
77645-EP-EPT	07 Jan 2013	13735725.7
77647-EP-EPT	23 Feb 2012	12869522.8
77648-EP-EPT	23 Feb 2012	12869253.0
77656-EP-EPT	28 Feb 2013	13764208.8
77661-EP-EPT	21 Jan 2013	13746455.8
77670-EP-EPT[2]	15 Dec 2011	11877542.8
77690-EP-EPT	30 Dec 2011	11813515.1
77693-EP-EPT	27 Feb 2013	13754151.2
77694-EP-EPT	10 Feb 2012	12867794.5
77695-EP-EPT	07 Feb 2012	12867913.1

51

77700-EP-EPT	15 Mar 2012	12871128.0
77703-EP-EPT	15 Feb 2013	13761726.2
77728-EP-EPT	19 Mar 2012	12871687.5
77731-EP-EPT	14 Feb 2012	12868900.7
77734-EP-EPT	28 Mar 2013	13722842.5
77738-EP-EPT	05 Apr 2012	12873823.4
77742-EP-EPT	22 Apr 2013	13780837.4
77746-EP-EPT	22 Jan 2013	13754226.2
77748-EP-EPT	06 Feb 2012	12868195.4
77752-EP-EPT	10 Jan 2013	13743147.4
77771-EP-EPT	28 Mar 2012	12872446.5
77783-EP-EPT	28 Apr 2012	12875684.8
77787-EP-EPA	06 Aug 2013	13179377.0
77790-EP-EPT	14 Feb 2012	12868463.6
77803-EP-EPT	28 Dec 2011	11808230.4
77805-EP-EPT	28 Dec 2011	11807948.2
77805-EP-EPT[2]	26 Dec 2012	12862981.3
77806-EP-EPT	20 Dec 2012	12866335.8
77808-EP-EPA	16 Apr 2013	13163902.3
77812-EP-EPT	02 Mar 2012	12869707.5
77815-EP-EPT	14 Mar 2012	12709316.9
77817-EP-EPT	23 Nov 2012	12867924.8
77818-EP-EPT	27 Feb 2012	12870112.5
77831-EP-EPT	08 Mar 2013	13772863.0
77844-EP-EPT	06 Mar 2012	12870702.3
77852-EP-EPT	08 Mar 2012	12870472.3
77874-EP-EPT	22 Feb 2012	12869469.2
77885-EP-EPT	28 Mar 2012	12873306.0
77894-EP-EPT	29 Jun 2012	12880097.6
77895-EP-EPT	27 Feb 2012	12869946.9
77899-EP-EPT	14 May 2012	12876682.1
77900-EP-EPT	14 Jun 2012	12878942.7
77910-EP-EPT	27 Feb 2013	13754293.2
77920-EP-EPT	05 Feb 2013	13749256.7
77923-EP-EPT	04 Apr 2012	12873488.6
77937-EP-EPT	28 Jun 2012	12879700.8
77941-EP-EPT	24 Jan 2013	13740659.1
77942-EP-EPT	09 Apr 2013	13779061.4
77950-EP-EPT	22 Feb 2012	12869512.9
77951-EP-EPT	22 Feb 2012	12869102.9
77956-EP-EPT	29 Mar 2012	12873182.5
77962-EP-EPT	03 May 2012	12875862.0
77980-EP-EPT	17 Jan 2013	13738088.7
77982-EP-EPA	27 Aug 2013	13181749.6
77991-EP-EPT	26 Mar 2012	12872360.8
77995-EP-EPT	05 Apr 2012	12873637.8
77996-EP-EPT	30 Mar 2012	12872448.1
78021-EP-EPT	17 Jan 2013	13738313.9
78028-EP-EPT	11 Jan 2013	13740515.5
78041-EP-EPT	06 May 2013	13788630.5
78044-EP-EPT	20 Mar 2012	12872228.7

78052-EP-EPT	07 Mar 2012	12870539.9
78053-EP-EPT[2]	23 Jan 2013	13743979.0
78056-EP-EPT	25 Mar 2013	13769702.5
78065-EP-EPT	08 Mar 2012	12870486.3
78069-EP-EPT	31 Jan 2013	13744309.9
78075-EP-EPT	08 Mar 2013	13761180.2
78077-EP-EPT	07 Jun 2013	13809942.9
78088-EP-EPT	13 Mar 2013	13760705.7
78089-EP-EPT	17 Feb 2012	12868773.8
78107-EP-EPT	15 Apr 2013	13786940.0
78113-EP-EPT	22 May 2013	13804389.8
78120-EP-EPT	24 Jan 2013	13760354.4
78129-EP-EPT	19 Mar 2012	12872073.7
78130-EP-EPT	30 Apr 2012	12875874.5
78131-EP-EPT	04 Mar 2013	13770141.3
78132-EP-EPT	11 Apr 2012	12873906.7
78142-EP-EPA	16 Jul 2013	13176635.4
78145-EP-EPT	18 Apr 2012	12874479.4
78146-EP-EPT	18 Jun 2013	13816409.0
78147-EP-EPT	16 Mar 2012	12871578.6
78149-EP-EPT	25 Feb 2013	13710445.1
78150-EP-EPT	25 Feb 2013	13710444.4
78153-EP-EPT	31 May 2012	12877797.6
78155-EP-EPT	05 Feb 2013	13747011.8
78156-EP-EPT	28 Feb 2012	12708468.9
78161-EP-EPT	18 May 2012	12876768.8
78166-EP-EPT	31 Mar 2012	12873227.8
78167-EP-EPT	25 Apr 2013	13728527.6
78181-EP-EPT	15 May 2012	12877022.9
78183-EP-EPT	26 Apr 2012	12875229.2
78196-EP-EPT	22 Jan 2013	13754788.1
78206-EP-EPT	05 Jun 2013	13807027.1
78213-EP-EPA	18 Jun 2013	13172379.3
78220-EP-EPA	07 May 2013	13166779.2
78224-EP-EPT	26 Feb 2013	13764977.8
78225-EP-EPT	19 Apr 2012	12874756.5
78226-EP-EPT	04 May 2012	12875795.2
78233-EP-EPT	22 May 2012	12727387.8
78237-EP-EPT	31 May 2012	12877973.3
78243-EP-EPT	12 Feb 2013	13754176.9
78246-EP-EPA	17 May 2013	13168228.8
78247-EP-EPT	16 Apr 2012	12874727.6
78254-EP-EPT	28 Jan 2013	13770158.7
78258-EP-EPT	08 Jun 2012	12878349.5
78264-EP-EPT	05 Apr 2013	13781210.3
78268-EP-EPT	29 Mar 2012	12872457.2
78281-EP-EPT	21 May 2012	12877351.2
78283-EP-EPT	26 Mar 2012	12715437.5
78289-EP-EPT	22 May 2012	12877435.3
78297-EP-EPT	30 May 2012	12877960.0
78303-EP-EPA	23 May 2013	13168882.2

53

78306-EP-EPT	20 Mar 2013	13769781.9
78307-EP-EPT	20 Mar 2013	13775414.9
78309-EP-EPT	25 May 2012	12877421.3
78313-EP-EPT	31 May 2012	12878031.9
78318-EP-EPT	04 Apr 2013	13772141.1
78319-EP-EPT	04 Apr 2013	13772173.4
78325-EP-EPT	15 Jun 2012	12878846.0
78351-EP-EPT	21 Feb 2013	13717556.8
78352-EP-EPT	31 May 2012	12877858.6
78353-EP-EPT	14 Mar 2013	13717050.2
78358-EP-EPT	30 May 2012	12877794.3
78365-EP-EPT	15 Mar 2013	13764621.2
78370-EP-EPT	21 Mar 2013	13763473.9
78372-EP-EPT	24 May 2013	13796637.0
78375-EP-EPA	17 Jul 2013	13176809.5
78381-EP-EPA	13 Feb 2013	13154998.2
78382-EP-EPT	26 Feb 2013	13758532.9
78387-EP-EPT	17 Apr 2013	13777973.2
78396-EP-EPT	23 Mar 2012	12710940.3
78398-EP-EPT	07 May 2013	13729789.1
78401-EP-EPA	14 Jun 2013	13172013.8
78405-EP-EPA	13 Feb 2013	13155031.1
78418-EP-EPT	05 Mar 2013	13761135.6
78419-EP-EPT	04 Jun 2012	12878354.5
78423-EP-EPT	14 Feb 2013	13760302.3
78432-EP-EPT	24 Apr 2013	13808762.2
78434-EP-EPT	26 Apr 2012	12875122.9
78435-EP-EPT[2]	03 Jan 2013	13764145.2
78439-EP-EPT	23 May 2012	12877118.5
78450-EP-EPT	26 Feb 2013	13764893.7
78461-EP-EPT	05 Apr 2013	13775854.6
78468-EP-EPT	27 Jun 2012	12879762.8
78478-EP-EPT	30 May 2012	12877697.8
78479-EP-EPT	12 Jul 2012	12880873.0
78485-EP-EPT	28 May 2012	12877667.1
78487-EP-EPT	29 Jun 2012	12880120.6
78488-EP-EPT	23 Apr 2013	13790598.0
78491-EP-EPT	09 May 2013	13726914.8
78496-EP-EPT	22 Feb 2013	13774987.5
78505-EP-EPT	19 Oct 2012	12875023.9
78518-EP-EPT	17 Jun 2013	13816700.2
78552-EP-EPT	27 Apr 2012	12720351.1
78553-EP-EPT	07 May 2013	13730922.5
78558-EP-EPT	26 Jun 2013	13826039.3
78565-EP-EPT	05 Apr 2012	12873700.4
78578-EP-EPT	22 May 2013	13740362.2
78580-EP-EPT	23 Apr 2013	13780860.6
78582-EP-EPT	07 May 2013	13787061.4
78583-EP-EPT	08 May 2013	13788217.1
78585-EP-EPT	15 Apr 2013	13791548.4
78589-EP-EPT	09 May 2013	13727682.0

78612-EP-EPT	29 Jun 2012	12879961.6
78613-EP-EPT	29 May 2012	12877930.3
78631-EP-EPT	25 Apr 2012	12875075.9
78632-EP-EPT	03 Jul 2013	13813162.8
78673-EP-EPT	23 May 2012	12877316.5
78674-EP-EPT	18 Jun 2013	13820416.9
78676-EP-EPT	24 May 2013	13731352.4
78678-EP-EPT	08 Apr 2013	13775830.6
78691-EP-EPA	11 Dec 2013	13196570.9
78697-EP-EPT	15 Aug 2012	12882913.2
78707-EP-EPT	21 May 2012	12877113.6
78717-EP-EPT	16 Jul 2013	13823286.3
78718-EP-EPT	06 May 2013	13787529.0
78724-EP-EPT	13 Apr 2012	12721570.5
78727-EP-EPT	16 Apr 2013	13778734.7
78730-EP-EPT	08 Jun 2012	12878615.9
78736-EP-EPA	18 Jun 2013	13172376.9
78738-EP-EPT	04 Jun 2012	12878603.5
78739-EP-EPT	03 Dec 2012	12880730.2
78742-EP-EPT	08 Aug 2012	12882619.5
78746-EP-EPT	03 Jul 2012	12880441.6
78755-EP-EPT	16 Apr 2013	13777995.5
78763-EP-EPT	15 May 2012	12877034.4
78765-EP-EPT	15 May 2012	12876744.9
78770-EP-EPT	31 May 2012	12877966.7
78777-EP-EPT	08 May 2012	12876517.9
78783-EP-EPA	23 Apr 2013	13164831.3
78786-EP-EPT	19 Apr 2013	13778643.0
78806-EP-EPT	01 Jun 2012	12877975.8
78816-EP-EPT	25 Apr 2013	13780919.0
78825-EP-EPA	12 Apr 2013	13163482.6
78854-EP-EPT	27 Jul 2012	12881611.3
78861-EP-EPT	20 Jun 2012	12879586.1
78876-EP-EPT	11 Apr 2013	13721369.0
78885-EP-EPT	07 Aug 2012	12882823.3
78887-EP-EPT	17 Aug 2012	12751242.4
78894-EP-EPT	06 May 2013	13787874.0
78900-EP-EPT	05 Jun 2013	13808721.8
78910-EP-EPA	06 Jun 2013	13170798.6
78912-EP-EPA	19 Oct 2012	12189187.3
78927-EP-EPT	20 Aug 2012	12883365.4
78932-EP-EPT	27 Jun 2012	12879627.3
78935-EP-EPT	29 Jun 2012	12880158.6
78952-EP-EPA	24 Apr 2013	13165068.1
78958-EP-EPT	31 Aug 2012	12883937.0
78962-EP-EPT	17 Jul 2012	12881183.3
78976-EP-EPT	18 Jun 2013	13819800.7
78986-EP-EPT	27 Aug 2012	12883806.7
78992-EP-EPT	24 Jun 2013	13766667.3
78994-EP-EPT	27 Jul 2012	12881628.7
78995-EP-EPT	05 Jul 2012	12797947.4

79003-EP-EPT	06 Jul 2012	12880658.5
79026-EP-EPT	18 Jun 2012	12879259.5
79047-EP-EPT	13 Jul 2012	12880961.3
79052-EP-EPA	21 Aug 2013	13181115.0
79062-EP-EPT	10 Jun 2013	13735357.9
79063-EP-EPT	10 Aug 2012	12882859.7
79082-EP-EPT	10 Jun 2013	13735356.1
79084-EP-EPA	23 Jul 2013	13177557.9
79103-EP-EPT	10 Jun 2013	13737639.8
79107-EP-EPT	27 Jun 2013	13809616.9
79108-EP-EPT	27 Jun 2013	13809720.9
79120-EP-EPT	18 Jun 2013	13815955.3
79125-EP-EPT	05 Apr 2013	13721364.1
79126-EP-EPT	05 Apr 2013	13721363.3
79128-EP-EPT	05 Apr 2013	13721367.4
79176-EP-EPA	06 Jun 2013	13170800.0
79200-EP-EPT	17 Jun 2013	13817171.5
79203-EP-EPT	07 Mar 2013	13806695.6
79243-EP-EPT	05 Oct 2012	12886105.1
79268-EP-EPT	22 May 2013	13800991.5
79271-EP-EPT	19 Jun 2012	12879539.0
79276-EP-EPT	14 Aug 2012	12883094.0
79283-EP-EPT	18 Sep 2012	12885037.7
79284-EP-EPT	28 Aug 2012	12883540.2
79324-EP-EPT	25 Jun 2013	13813533.0
79341-EP-EPT	10 Jun 2013	13804935.8
79343-EP-EPA	31 Oct 2013	13190978.0
79373-EP-EPA	10 Sep 2013	13183627.2
79377-EP-EPT	05 Jun 2013	13826009.6
79397-EP-EPT	08 Aug 2012	12882867.0
79403-EP-EPT	19 Jul 2012	12881436.5
79415-EP-EPT	10 Jun 2013	13736934.4
79497-EP-EPA	13 Sep 2013	13184236.1
79507-EP-EPA	04 Sep 2013	13182937.6
79511-EP-EPT	15 Aug 2012	12882950.4
79526-EP-EPT	17 Jun 2013	13813696.5
79530-EP-EPA	05 Dec 2013	13195771.4
79552-EP-EPT	25 Jul 2013	13822982.8
79565-EP-EPT	11 Jul 2012	12881089.2
79589-EP-EPA	11 Dec 2013	13196581.6
79628-EP-EPT	09 Oct 2012	12886225.7
79663-EP-EPA	05 Sep 2013	13183116.6
79788-EP-EPT	12 Aug 2013	13828285.0
79814-EP-EPA	15 Oct 2013	13188666.5
79904-EP-EPA	05 Nov 2013	13191489.7
80095-EP-EPA	03 Dec 2013	13195396.0
80096-EP-EPT	26 Oct 2012	12783793.8
80247-EP-EPA	05 Mar 2014	14157738.7
80271-EP-EPA	07 Feb 2014	14154223.3
80277-EP-EPT	15 Oct 2012	12788660.4
80358-EP-EPA	05 Nov 2013	13191488.9

56

80365-EP-EPA	05 Dec 2013	13195801.9
80485-EP-EPA	04 Oct 2013	13187327.5
80516-EP-EPA	15 Jan 2014	14151225.1
80529-EP-EPA	17 Jan 2014	14151523.9
80747-EP-EPA	26 Feb 2014	14156834.5
80752-EP-EPA	05 Feb 2014	14153896.7
80855-EP-EPA	03 Oct 2013	13187215.2
80864-EP-EPA	04 Dec 2013	13195601.3
80890-EP-EPA	31 Mar 2014	14162608.5
81020-EP-EPA	19 Dec 2013	13198256.3
81027-EP-EPA	12 Nov 2013	13192399.7
81279-EP-EPA	20 Feb 2014	14155894.0
81428-EP-EPA	12 Jun 2014	14172049.0
81511-EP-EPA	17 Feb 2014	14155341.2
81553-EP-EPA	29 Jan 2014	14152960.2
81566-EP-EPA	14 Jan 2014	14151053.7
81568-EP-EPA	04 Apr 2014	14163515.1
81578-EP-EPA	03 Mar 2014	14157420.2
81609-EP-EPA	09 Jun 2014	14171647.2
81686-EP-EPA	02 Jun 2014	14170750.5
81779-EP-EPA	11 Jun 2014	14171866.8
81824-EP-EPA	31 Mar 2014	14162625.9
81882-EP-EPA	31 Mar 2014	14162636.6
81889-EP-EPA	02 Apr 2014	14163106.9
81891-EP-EPA	03 Apr 2014	14163302.4
81950-EP-EPA	26 Mar 2014	14161700.1
82150-EP-EPA	05 May 2014	14166951.5
82195-EP-EPA	20 Mar 2014	14160798.6
82328-EP-EPA	13 May 2014	14167995.1
82434-EP-EPA	11 Nov 2014	14192621.2
82436-EP-EPA	14 Mar 2014	14159868.0
82450-EP-EPA	29 May 2013	13169647.8
82454-EP-EPA	26 Aug 2014	14182188.4
82571-EP-EPA	04 Apr 2014	14163540.9
82775-EP-EPA	06 Aug 2014	14180006.0
82800-EP-EPA	03 Jul 2014	14175509.0
82888-EP-EPA	21 Jul 2014	14177746.6
82915-EP-EPA	11 Jun 2013	13171360.4
82993-EP-EPA	05 Aug 2014	14179776.1
83030-EP-EPA	22 May 2014	14169377.0
83061-EP-EPA	03 Jul 2014	14175510.8
83144-EP-EPA	29 Sep 2014	14186727.5
83201-EP-EPA	11 Aug 2014	14180454.2
83204-EP-EPA	24 Jul 2014	14178293.8
83230-EP-EPA	18 Sep 2013	13184956.4
83322-EP-EPA	30 Oct 2014	14191038.0
83325-EP-EPA	21 Jul 2014	14177747.4
83346-EP-EPA	16 Jul 2014	14177194.9
83373-EP-EPA	24 Oct 2013	13190053.2
83430-EP-EPA	24 Sep 2014	14186156.7
83437-EP-EPA	12 Nov 2014	14192745.9

83441-EP-EPA	06 Nov 2014	14191992.8
83528-EP-EPA	20 Oct 2014	14189462.6
83677-EP-EPA	21 Nov 2013	13193742.7
83720-EP-EPA	24 Sep 2014	14186152.6
83751-EP-EPA	04 Aug 2014	14179629.2
83756-EP-EPA	25 Sep 2014	14186292.0
83779-EP-EPA	07 Aug 2014	14180115.9
83827-EP-EPA	06 Aug 2014	14180002.9
83921-EP-EPA	06 Nov 2014	14191979.5
83955-EP-EPA	24 Sep 2014	14186150.0
83960-EP-EPA	22 Oct 2014	14189823.9
84004-EP-EPA	13 Oct 2014	14188582.2
84006-EP-EPA	15 Oct 2014	14188959.2
84038-EP-EPA	22 Sep 2014	14185703.7
84069-EP-EPA	18 Nov 2014	14193574.2
84084-EP-EPA	07 Oct 2014	14187846.2
84133-EP-EPA	07 Oct 2014	14187845.4
84147-EP-EPA	07 Oct 2014	14187844.7
84153-EP-EPA	30 Oct 2014	14191033.1
84180-EP-EPA	20 Oct 2014	14189481.6
84255-EP-EPA	06 Oct 2014	14187689.6
84285-EP-EPA	10 Sep 2014	14184170.0
84286-EP-EPA	13 Oct 2014	14188583.0
84345-EP-EPA	20 Oct 2014	14189486.5
84355-EP-EPA	06 Nov 2014	14191973.8
84382-EP-EPA	01 Oct 2014	14187239.0
84410-EP-EPA	06 Nov 2014	14191996.9
84419-EP-EPA	22 Sep 2014	14185688.0
86301-EP-EPT	29 Apr 2011	11778053.6

Europäisches Patentamt
European Patent Office
Office européen des brevets

European Patent Office
80298 MUNICH
GERMANY

Questions about this communication ?
Contact Customer Services at www.epo.org/contact

Nokia Corporation
Intellectual Property Department
Karakaari 7
02610 Espoo
FINLANDE

Date
07.07.15

Reference	Application No./Patent No.
NC77198EP	12845839.5 - 1905 / 2774375
Applicant/Proprietor	
Nokia Technologies Oy	

Communication

concerning the registration of amendments relating to

☑ a transfer (R. 22 and 85 EPC)

☐ entries pertaining to the applicant / the proprietor (R. 143(1)(f) EPC)

As requested, the entries pertaining to the applicant of the above-mentioned European patent application / to the proprietor of the above-mentioned European patent have been amended to the following:

AL AT BE BG CH CY CZ DE DK EE ES FI FR GB GR HR HU IE IS IT LI LT LU
LV MC MK MT NL NO PL PT RO RS SE SI SK SM TR
Nokia Technologies Oy
Karaportti 3
02610 Espoo/FI

The registration of the changes has taken effect on 18.06.15.

In the case of a published application / a patent, the change will be recorded in the Register of European Patents and published in the European Patent Bulletin (Section I.12 / II.12).

Your attention is drawn to the fact that, in the case of the registration of a transfer, any automatic debit order only ceases to be effective from the date of its express revocation (cf. point 14(c) of the Arrangements for the automatic debiting procedure, supplementary publication 3 - OJ EPO 2015).

Receiving Section / For the Examining Division / For the Opposition Division / For the Legal Division *)

Europäisches Patentamt • European Patent Office • Office européen des brevets

*) See note.

Note
This communication is issued by/for the department with whom responsibility lies. The Legal Division is responsible for the registration of transfers, changes of name (Articles 71, 72 and 74 EPC and Rules 22 and 85 EPC) as well as for the rectification of the designation of the inventor (Rule 21 EPC) (see Decision of the President of the EPO, OJ EPO 2013, 600). In all other cases, the Receiving Section, the Examining Division or the Opposition Division is responsible, depending on the stage in proceedings.

Amazon.com, Inc., Amazon.com Services LLC - Ex. 1017, Page 000245

Europäisches Patentamt
European Patent Office
Office européen des brevets

Application No.: 12845839.5

The search has started on 07.03.16 (see Notice from the European Patent Office dated 03/2013, OJ EPO 2013, 153).

Receiving Section

Amazon.com, Inc., Amazon.com Services LLC - Ex. 1017, Page 000246

Europäisches Patentamt
European Patent Office
Office européen des brevets

SUPPLEMENTARY EUROPEAN SEARCH REPORT

Application Number
EP 12 84 5839

DOCUMENTS CONSIDERED TO BE RELEVANT

Category	Citation of document with indication, where appropriate, of relevant passages	Relevant to claim	CLASSIFICATION OF THE APPLICATION (IPC)
X	NAKAMURA H ET AL: "Unification of derivation process for merge mode and MVP", 6. JCT-VC MEETING; 97. MPEG MEETING; 14-7-2011 - 22-7-2011; TORINO; (JOINT COLLABORATIVE TEAM ON VIDEO CODING OF ISO/IEC JTC1/SC29/WG11 AND ITU-T SG.16); URL: HTTP://WFTP3.ITU.INT/AV-ARCH/JCTVC-SITE/,, no. JCTVC-F419, 1 July 2011 (2011-07-01), XP030009442,	1-5, 7-12, 14-18	INV. H04N19/52
Y	* abstract * * sections 1 and 2 * * figures 1-2 * * tables 2-4 *	6,13	

A	WIEGAND T ET AL: "WD3: Working Draft 3 of High-Efficiency Video Coding", 5. JCT-VC MEETING; 96. MPEG MEETING; 16-3-2011 - 23-3-2011; GENEVA; (JOINT COLLABORATIVE TEAM ON VIDEO CODING OF ISO/IEC JTC1/SC29/WG11 AND ITU-T SG.16); URL: HTTP://WFTP3.ITU.INT/AV-ARCH/JCTVC-SITE/, INTERNET ENGINEERING TASK FORCE, IETF, CH, no. JCTVC-E603, 29 March 2011 (2011-03-29) , XP030009014, ISSN: 0000-0003 * sections 8.4.2.1.3 and sections 8.4.2.1.4 *	1-18	

	-/--		

TECHNICAL FIELDS SEARCHED (IPC)

H04N

The supplementary search report has been based on the last set of claims valid and available at the start of the search.

2

Place of search	Date of completion of the search	Examiner
The Hague	14 March 2016	Mayer, Claudia

CATEGORY OF CITED DOCUMENTS

X : particularly relevant if taken alone
Y : particularly relevant if combined with another document of the same category
A : technological background
O : non-written disclosure
P : intermediate document

T : theory or principle underlying the invention
E : earlier patent document, but published on, or after the filing date
D : document cited in the application
L : document cited for other reasons
.....
& : member of the same patent family, corresponding document

EPO FORM 1503 03.82 (P04C04)

Amazon.com, Inc., Amazon.com Services LLC - Ex. 1017, Page 000247

Europäisches Patentamt
European Patent Office
Office européen des brevets

SUPPLEMENTARY EUROPEAN SEARCH REPORT

Application Number
EP 12 84 5839

DOCUMENTS CONSIDERED TO BE RELEVANT

Category	Citation of document with indication, where appropriate, of relevant passages	Relevant to claim	CLASSIFICATION OF THE APPLICATION (IPC)
A	ZHENG Y ET AL: "Merge Candidate Selection in 2NxN, Nx2N, and NxN Mode", 97. MPEG MEETING; 18-7-2011 - 22-7-2011; TORINO; (MOTION PICTURE EXPERT GROUP OR ISO/IEC JTC1/SC29/WG11),, no. m20723, 17 July 2011 (2011-07-17), XP030049286, * abstract * * sections 1 and 2 * * figures 1-2 * -----	4,6,11, 13	
Y	BROSS B ET AL: "Description of Core Experiment 9: MV Coding and Skip/Merge Operations", 6. JCT-VC MEETING; 97. MPEG MEETING; 14-7-2011 - 22-7-2011; TORINO; (JOINT COLLABORATIVE TEAM ON VIDEO CODING OF ISO/IEC JTC1/SC29/WG11 AND ITU-T SG.16); URL: HTTP://WFTP3.ITU.INT/AV-ARCH/JCTVC-SITE/,, no. JCTVC-F909, 22 July 2011 (2011-07-22), XP030009810, * sections 2.2 and 2.3 * -----	6,13	TECHNICAL FIELDS SEARCHED (IPC)
A	JEON Y ET AL: "On MVP list pruning process", 6. JCT-VC MEETING; 97. MPEG MEETING; 14-7-2011 - 22-7-2011; TORINO; (JOINT COLLABORATIVE TEAM ON VIDEO CODING OF ISO/IEC JTC1/SC29/WG11 AND ITU-T SG.16); URL: HTTP://WFTP3.ITU.INT/AV-ARCH/JCTVC-SITE/,, no. JCTVC-F105, 1 July 2011 (2011-07-01), XP030009128, * abstract * * sections 1 and 2 * ----- -/--	6,13	

The supplementary search report has been based on the last set of claims valid and available at the start of the search.

2

Place of search	Date of completion of the search	Examiner
The Hague	14 March 2016	Mayer, Claudia

CATEGORY OF CITED DOCUMENTS

X : particularly relevant if taken alone
Y : particularly relevant if combined with another document of the same category
A : technological background
O : non-written disclosure
P : intermediate document

T : theory or principle underlying the invention
E : earlier patent document, but published on, or after the filing date
D : document cited in the application
L : document cited for other reasons
.....
& : member of the same patent family, corresponding document

EPO FORM 1503 03.82 (P04C04)

Amazon.com, Inc., Amazon.com Services LLC - Ex. 1017, Page 000248

Europäisches Patentamt
European Patent Office
Office européen des brevets

SUPPLEMENTARY EUROPEAN SEARCH REPORT

Application Number
EP 12 84 5839

DOCUMENTS CONSIDERED TO BE RELEVANT

Category	Citation of document with indication, where appropriate, of relevant passages	Relevant to claim	CLASSIFICATION OF THE APPLICATION (IPC)
X,P	BICI O ET AL: "Non-CE13: Simplification of merge mode", 7. JCT-VC MEETING; 98. MPEG MEETING; 21-11-2011 - 30-11-2011; GENEVA; (JOINT COLLABORATIVE TEAM ON VIDEO CODING OF ISO/IEC JTC1/SC29/WG11 AND ITU-T SG.16); URL: HTTP://WFTP3.ITU.INT/AV-ARCH/JCTVC-SITE/,, no. JCTVC-G593, 8 November 2011 (2011-11-08), XP030110577, * abstract * * sections 1 and 2 * * figure 1 * -----	1-18	
			TECHNICAL FIELDS SEARCHED (IPC)

The supplementary search report has been based on the last set of claims valid and available at the start of the search.

2

Place of search	Date of completion of the search	Examiner
The Hague	14 March 2016	Mayer, Claudia

CATEGORY OF CITED DOCUMENTS

X : particularly relevant if taken alone
Y : particularly relevant if combined with another document of the same category
A : technological background
O : non-written disclosure
P : intermediate document

T : theory or principle underlying the invention
E : earlier patent document, but published on, or after the filing date
D : document cited in the application
L : document cited for other reasons
.....
& : member of the same patent family, corresponding document

EPO FORM 1503 03.82 (P04C04)

Amazon.com, Inc., Amazon.com Services LLC - Ex. 1017, Page 000249

Information on Search Strategy - Pilot phase (see OJ 2015, A86)
The type of information contained in this sheet may change during the pilot for improving the usefulness of this new service.

Application Number

EP 12 84 5839

TITLE: METHOD FOR VIDEO CODING AND AN APPARATUS

APPLICANT: Nokia Technologies Oy

IPC CLASSIFICATION: H04N19/52

EXAMINER: Mayer, Claudia

CONSULTED DATABASES: DOSYS, EPODOC, INET, NPL, XPI3E, XPVIDEO, WPI

CLASSIFICATION SYMBOLS DEFINING EXTENT OF THE SEARCH:

IPC:

CPC: H04N19/52

FI/F-TERMS:

KEYWORDS OR OTHER ELEMENTS FEATURING THE INVENTION:
Determining a set of spatial motion vector prediction candidates being provided with motion information; selecting a first spatial motion vector prediction candidate from the set of spatial motion vector prediction candidates as a potential spatial motion vector prediction candidate to be included in a merge list for the prediction unit; determining a subset of spatial motion vector predictions based on the location of the block associated with the first spatial motion vector prediction candidate;comparing motion information of the first spatial motion vector prediction candidate with motion information of the spatial motion vector prediction candidate in the determined subset of spatial motion vector prediction candidates;if at least one of the comparisons indicates that the motion vector information of the spatial motion vector prediction candidates correspond with each other, excluding the first spatial motion vector prediction candidate from the merge list.

EPO FORM P04A42

The examination is being carried out on the **following application documents**

Description, Pages

1-34 as published

Claims, Numbers

1-18 filed with entry into the regional phase before the EPO

Drawings, Sheets

1/13-13/13 as published

Reference is made to the following documents; the numbering will be adhered to in the rest of the procedure.

D1 NAKAMURA H ET AL: "Unification of derivation process for merge mode and MVP", 6. JCT-VC MEETING; 97. MPEG MEETING; 14-7-2011 - 22-7-2011; TORINO; (JOINT COLLABORATIVE TEAM ON VIDEO CODING OF ISO/IEC JTC1/SC29/WG11 AND ITU-T SG.16); URL: HTTP://WFTP3.ITU.INT/AV-ARCH/JCTVC-SITE/, no. JCTVC-F419, 1 July 2011 (2011-07-01), XP030009442

D2 WIEGAND T ET AL: "WD3: Working Draft 3 of High-Efficiency Video Coding", 5. JCT-VC MEETING; 96. MPEG MEETING; 16-3-2011 - 23-3-2011; GENEVA; (JOINT COLLABORATIVE TEAM ON VIDEO CODING OF ISO/IEC JTC1/SC29/WG11 AND ITU-T SG.16); URL: HTTP://WFTP3.ITU.INT/AV-ARCH/JCTVC-SITE/, INTERNET ENGINEERING TASK FORCE, IETF, CH, no. JCTVC-E603, 29 March 2011 (2011-03-29), XP030009014, ISSN: 0000-0003

D3 ZHENG Y ET AL: "Merge Candidate Selection in 2NxN, Nx2N, and NxN Mode", 97. MPEG MEETING; 18-7-2011 - 22-7-2011; TORINO; (MOTION PICTURE EXPERT GROUP OR ISO/IEC JTC1/SC29/WG11), no. m20723, 17 July 2011 (2011-07-17), XP030049286

D4 BROSS B ET AL: "Description of Core Experiment 9: MV Coding and Skip/Merge Operations", 6. JCT-VC MEETING; 97. MPEG MEETING; 14-7-2011 - 22-7-2011; TORINO; (JOINT COLLABORATIVE TEAM ON

Amazon.com, Inc., Amazon.com Services LLC - Ex. 1017, Page 000251

VIDEO CODING OF ISO/IEC JTC1/SC29/WG11 AND ITU-T SG.16); URL: HTTP://WFTP3.ITU.INT/AV-ARCH/JCTVC-SITE/, no. JCTVC-F909, 22 July 2011 (2011-07-22), XP030009810

D5 JEON Y ET AL: "On MVP list pruning process", 6. JCT-VC MEETING; 97. MPEG MEETING; 14-7-2011 - 22-7-2011; TORINO; (JOINT COLLABORATIVE TEAM ON VIDEO CODING OF ISO/IEC JTC1/SC29/WG11 AND ITU-T SG.16); URL: HTTP://WFTP3.ITU.INT/AV-ARCH/JCTVC-SITE/, no. JCTVC-F105, 1 July 2011 (2011-07-01), XP030009128

1 The application does not meet the requirements of Article 84 EPC.

1.1 Claims 1, 9 and 15-18 do not meet the requirements of Article 84 EPC in that the matter for which protection is sought is not defined. By defining "selecting a first spatial motion vector prediction candidate from the set of spatial motion vector prediction candidates as a potential spatial motion vector prediction candidate to be included in a merge list for the prediction unit" and "determining a subset of spatial motion vector predictions based on the location of the block associated with the first spatial motion vector prediction candidate" without specifying how this is actually achieved, the claims attempt to define the subject-matter in terms of the result to be achieved. Such a definition is only allowable under the conditions elaborated in the Guidelines F-IV, 4.10. In this instance, however, such a formulation is not allowable because it appears possible to define the subject-matter in more concrete terms, viz. in terms of how the effect is to be achieved.

1.2 Claims 6 and 13 refer to "the potential spatial motion vector prediction candidate on the left side [...]", "the potential spatial motion vector prediction candidate above [...]", "the potential spatial motion vector prediction candidate, which is on the right side [...]", "the potential spatial motion vector prediction candidate, which is below [...]" and "the potential spatial motion vector prediction candidate cornerwise neighbouring" the prediction unit. Since no definition of these potential spatial motion vector prediction candidates has been previously provided, these terms used in claims 6 and 13 are vague and unclear and leave the reader in doubt as to the meaning of the technical features to which they refer, thereby rendering the definition of the subject-matter of said claims unclear (Article 84 EPC).

Amazon.com, Inc., Amazon.com Services LLC - Ex. 1017, Page 000252

1.3 The term "essentially similar motion" used in claims 6 and 13 is vague and unclear and leaves the reader in doubt as to the meaning of the technical feature to which it refers, thereby rendering the definition of the subject-matter of said claim unclear (Article 84 EPC; see also Guidelines F-IV, 4.7).

2 Document D1 explicitly refers to document D2 (see reference [1] of D1). The teaching of D2 is therefore regarded as incorporated into document D1 (see Guidelines, G-IV, 8).

3 The present application does not meet the requirements of Article 52(1) EPC because the subject-matter of claims 1, 9 and 15-18 is not new within the meaning of Article 54(1) and (2) EPC.

3.1 A method comprising:
receiving a block of pixels including a prediction unit;
determining a set of spatial motion vector prediction candidates for the block of pixels; the spatial motion vector prediction candidates being provided with motion information;
selecting a first spatial motion vector prediction candidate from the set of spatial motion vector prediction candidates as a potential spatial motion vector prediction candidate to be included in a merge list for the prediction unit;
determining a subset of spatial motion vector predictions based on the location of the block associated with the first spatial motion vector prediction candidate (D1: abstract, section 2.2.1, fig. 1(a) and 2(b));
comparing motion information of the first spatial motion vector prediction candidate with motion information of the spatial motion vector prediction candidate in the determined subset of spatial motion vector prediction candidates;
if at least one of the comparisons indicates that the motion vector information of the spatial motion vector prediction candidates correspond with each other, excluding the first spatial motion vector prediction candidate from the merge list (D1: fig. 1(a); see also D2: sections 8.4.2.1.3 and 8.4.2.1.3; see also section 2 of this communication).

The subject-matter of claim 1 is therefore not new (Article 54(1) and (2) EPC).

3.2 The same reasoning and objection with respect to novelty as raised against claim 1 in section 3.1 of this communication also apply, mutatis mutandis, to claims 15 and 17, since their subject-matter corresponds to the subject-matter

Amazon.com, Inc., Amazon.com Services LLC - Ex. 1017, Page 000253

of claim 1.
The subject-matter of claims 15 and 17 is therefore not new (Article 54(1) and (2) EPC).

3.3 Claims 9, 16 and 18 address a decoding method, apparatus and computer-readable medium that correspond to the encoding method, apparatus and computer-readable medium of claims 1, 15 and 17, respectively. The same reasoning and objection with respect to novelty as raised against claims 1, 15 and 17 in sections 3.1 and 3.2 of this communication therefore also apply, mutatis mutandis, to claims 9, 16 and 18.
The subject-matter of claims 9, 16 and 18 is therefore not new (Article 54(1) and (2) EPC).

4 Dependent claims 1-8 and 10-14 do not appear to contain any additional features which, in combination with the features of any claim to which they refer, meet the requirements of the EPC with respect to novelty (Article 54(1) and (2) EPC) and/or inventive step (Article 56 EPC).

4.1 Claim 2 (lack of novelty, Article 54(1) and (2) EPC):
D1: section 2, table 4, 4th row.

4.2 Claims 3 and 10 (lack of novelty, Article 54(1) and (2) EPC):
D1: section 2, table 2, last row.

4.3 Claims 4 and 11 (lack of novelty, Article 54(1) and (2) EPC):
D2: section 8.4.2.1.4 (see also D3: section 1, fig. 1, which provides a summary the procedure of HM3.0 in case of 2NxN, Nx2N PU mode ("According to the current HM3.0, motion information of the candidate that's located inside the left or upper neighboring PU is always not to be used [...]."));; see also section 2 of this communication.

4.4 Claims 5 and 12 (lack of novelty, Article 54(1) and (2) EPC):
D1: section 2.

4.5 Claims 6 and 13 (lack of inventive step, Article 56 EPC):
D1 (with D2 incorporated; see also D3: section 1, fig. 1 which provides a summary the procedure of HM3.0 in case of 2NxN, Nx2N PU mode ("According to the current HM3.0, motion information of the candidate that's located inside the left or upper neighboring PU is always not to be used. Any other candidate that shares the same motion information with that candidate is also not to be used."); see also section 2 of this communication) in combination with D4: section 2.2; see also document D5 of which D4 provides a summary in section 2.2).

Amazon.com, Inc., Amazon.com Services LLC - Ex. 1017, Page 000254

The selection conditions for "the potential spatial motion vector prediction candidate on the left side of the prediction unit" and "the potential spatial motion vector prediction candidate above the prediction unit" are anticipated by D1 (with D2 incorporated) in combination with D4 (see also section 1.3 of this communication).
It is further unclear what advantage is achieved by the particular sequence of comparisons defined in claims 6 and 13 that are performed for "the potential spatial motion vector prediction candidate, which is on the right side of the prediction unit", "the potential spatial motion vector prediction candidate, which is below the prediction unit" and "the potential spatial motion vector prediction candidate cornerwise neighbouring the prediction unit". This particular sequence of comparisons therefore appears to be merely one of several straightforward possibilities which the skilled person would select, depending on the circumstances, in order to derive a subset of spatial motion vector prediction candidates.
The subject-matter of claims 6 and 13 therefore cannot be considered to involve an inventive step within the meaning of Article 56 EPC.

4.6 Claim 7 (lack of novelty, Article 54(1) and (2) EPC):
D1: section 2.

4.7 Claims 8 and 14 (lack of novelty, Article 54(1) and (2) EPC):
D2: section 8.4.2.1.3; see also section 2 of this communication.

5 It is not at present apparent which part of the application could serve as a basis for a new, allowable claim.

5.1 Should the applicant nevertheless regard some particular matter as patentable, an independent claim should be filed taking account of Rule 43(1) EPC. When filing amended claims, the applicant is requested to comment on novelty and inventive step, in particular by explaining the invention as claimed in terms of problem-solution with regard to the closest prior art.

5.2 The subject-matter should be defined in terms of a single independent claim in each category followed by dependent claims introducing only additional features that are merely optional (Rule 43(2-4) EPC).

5.3 In order to facilitate the examination of the conformity of the amended application with the requirements of Article 123(2) EPC, the applicant should clearly identify the amendments made, irrespective of whether they concern amendments by addition, replacement or deletion, and indicate the passages of the application as filed on which these amendments are based.

Amazon.com, Inc., Amazon.com Services LLC - Ex. 1017, Page 000255

Europäisches Patentamt
European Patent Office
Office européen des brevets

European Patent Office
80298 MUNICH
GERMANY

Questions about this communication ?
Contact Customer Services at www.epo.org/contact

Nokia Corporation
Intellectual Property Department
Karakaari 7
02610 Espoo
FINLANDE

Date
21.03.16

Reference	Application No./Patent No.
NC77198EP	12845839.5 - 1905 / 2774375 PCT/FI2012051070
Applicant/Proprietor	
Nokia Technologies Oy	

Communication

The extended European search report is enclosed.

The extended European search report includes, pursuant to Rule 62 EPC, the supplementary European search report (Art. 153(7) EPC) and the European search opinion.

Copies of documents cited in the European search report are attached.

☑ 0 additional set(s) of copies of such documents is (are) enclosed as well.

Refund of the search fee
If applicable under Article 9 Rules relating to fees, a separate communication from the Receiving Section on the refund of the search fee will be sent later.

Should you wish to further prosecute this application in the examination phase, your attention is drawn to the provisions of Rule 70a EPC. An invitation to respond to the extended European search report will be issued shortly (R. 70(2) EPC).

Europäisches Patentamt • European Patent Office • Office européen des brevets

Amazon.com, Inc., Amazon.com Services LLC - Ex. 1017, Page 000256

Europäisches Patentamt
European Patent Office
Office européen des brevets

European Patent Office
80298 MUNICH
GERMANY

Questions about this communication ?
Contact Customer Services at www.epo.org/contact

Nokia Corporation
Intellectual Property Department
Karakaari 7
02610 Espoo
FINLANDE

Date
07.04.16

Reference	Application No./Patent No.
NC77198EP	12845839.5 - 1905 / 2774375 PCT/FI2012051070
Applicant/Proprietor	
Nokia Technologies Oy	

Communication pursuant to Rules 70(2) and 70a(2) EPC

A supplementary European search report has been drawn up concerning the above-identified European patent application (publication number: 2774375).

Since the request for examination has been filed (R. 70(1), 159(1)(f), Art. 94(1) EPC) prior to the transmission of the supplementary European search report, you are hereby invited to indicate within

six months

of notification of this communication whether you wish to proceed further with the European patent application.

If you do not indicate in due time that you wish to proceed further with the European patent application, it **will be deemed to be withdrawn** (R. 70(3) EPC).

You are invited, within the above-mentioned six-month period, to comment on the objections raised in the opinion accompanying the European search report and/or to file any amendments to the description, claims and drawings correcting any deficiencies noted in the opinion (R. 70a(2), R. 137(2) EPC; Guidelines for Examination in the EPO, B-XI, 8).

If filing amendments, you must identify them and indicate the basis for them in the application as filed. Failure to meet either requirement may lead to a communication from the Examining Division requesting that you correct this deficiency (R. 137(4) EPC).

Should the reply to the invitation pursuant to Rule 70a(2) EPC be filed in an admissible non-EPO language, a translation is to be submitted within one month of its filing (R. 6(2) EPC).

Should you not comply with this invitation within the time limit, the application **will be deemed to be withdrawn** in accordance with Rule 70a(3) EPC.

Receiving Section

Europäisches Patentamt • European Patent Office • Office européen des brevets

Registered letter

Amazon.com, Inc., Amazon.com Services LLC - Ex. 1017, Page 000257

27 July 2016
VIA EPOLINE

European Patent Office
Directorate General 2
D-80298 MÜNCHEN
Germany

Our ref.: TP109764EP TPU/EIP

RE: EUROPEAN PATENT APPLICATION NO. 12845839.5
in the name of NOKIA CORPORATION
Change of Representative

Dear Sirs,

The applicant has asked us to act as a professional representative in the above identified application in the future. Please send all future correspondence to:

Tampereen Patenttitoimisto Oy (Association No. 477.0)
Visiokatu 1
FI-33720 Tampere
Telephone: +358-10-227 2600
Facsimile: +358-10-227 2662

Attached is a Power of Attorney signed by the applicant.

Please record the change and send us a confirmation on the recordation.

Yours sincerely,
TAMPEREEN PATENTTITOIMISTO OY

Timo Pursiainen
Professional Representative

ENCL.

Europäisches Patentamt
European Patent Office
Office européen des brevets

Letter accompanying subsequently filed items

Representative:
Tampereen Patenttitoimisto Oy
477
Visiokatu 1
33720 Tampere
Finland

Phone: +358-10 227 2600
Fax: +358-10 227 2662
E-mail: mailbox@tampereenpatenttitoimisto.fi

80298 Munich
Germany
Tel. +49(0)89 2399-0 | Fax -4465

P.O. Box 5818
NL-2280 HV Rijswijk
Netherlands
Tel. +31(0)70 340-2040 | Fax -3016

10958 Berlin
Germany
Tel. +49(0)30 25901-0 | Fax -840

The document(s) listed below is (are) subsequently filed documents pertaining to the following application:

Application number	12845839.5
Applicant's or representative's reference	TP109764EP

	Description of document	Original file name	Assigned file name
1	Document concerning representation	Order to Patent Office (attorney) TP109764EP (ID 850837).pdf	FREP-1.pdf
2	Authorisation of representative	Nokia_EP_POA_2016.pdf	1003-1.pdf

Signatures

Place:	**Tampere**
Date:	**27 July 2016**
Signed by:	**Timo Pursiainen 36563**
Association:	**Tampereen Patenttitoimisto Oy**
Representative name:	**Timo Pursiainen**
Capacity:	**(Representative)**

Europäisches Patentamt
European Patent Office
Office européen des brevets

General authorisation

Europäisches Patentamt München
06. April 2016
Dir. 5.2.3

Please forward the **original** direct to the EPO, Legal Division (Dir. 5.2.3) in Munich.
Please read the attached notes before completing the form.

1 General authorisation No. (for official use only): 629030.8

2 I (We)
Full name and address of authorisor(s)

Nokia Technologies Oy
Karaportti 3
FI-02610 Espoo
Finland

3 **do hereby authorise**

Full name and address of authorisee: professional representative, legal practitioner, employee, association of representatives – **please specify**

Tampereen Patenttitoimisto Oy (association no. 477)
Visiokatu 1
FI-33720 Tampere
Finland

4 **to represent me (us) in all proceedings established by the European Patent Convention and to act for me (us) in all patent transactions.**

☐ This authorisation includes the power to receive payments on my (our) behalf.

☐ This authorisation shall also apply to the same extent to any proceedings established by the Patent Cooperation Treaty.

5 ☐ Sub-authorisation may be given.

☐ Additional representatives indicated on supplementary sheet.

6 ☐ Please return a copy, supplemented by the general authorisation number, to the authorisor.

Name (printed)	Position within the company (where relevant)
Kari Puranen	Director
Place, Date	**Signature***
Tampere, 9th March, 2016	

7 * The form must bear the personal signature(s) of the authorisor(s). In the case of legal persons, the signature must be that of the person empowered to sign on behalf of the company. If possible, please sign in blue.

EPO 1004 09.11

Amazon.com, Inc., Amazon.com Services LLC - Ex. 1017, Page 000260

Europäisches Patentamt
European Patent Office
Office européen des brevets

Acknowledgement of receipt

We hereby acknowledge receipt of the following subsequently filed document(s):

Submission number	4526296
Application number	EP12845839.5
Date of receipt	27 July 2016
Receiving Office	European Patent Office, The Hague
Your reference	TP109764EP
Applicant	All applicants as on file
Documents submitted	package-data.xml epf1038.pdf (1 p.) 1003-1.pdf\Nokia_EP_POA_2016.pdf (1 p.) ep-sfd-request.xml FREP-1.pdf\Order to Patent Office (attorney) TP109764EP (ID 850837).pdf (1 p.)
Submitted by	CN=Timo Pursiainen 36563
Method of submission	Online
Date and time receipt generated	27 July 2016, 16:14 (CEST)
Message Digest	BF:9A:12:F5:A3:22:29:96:35:2E:12:DE:F8:C8:20:3A:40:CE:82:83

Correction by the EPO of errors in debit instructions filed by eOLF
Errors in debit instructions filed by eOLF that are caused by the editing of Form 1038E entries or the continued use of outdated software (all forms) may be corrected automatically by the EPO, leaving the payment date unchanged (see decision T 152/82, OJ EPO 1984, 301 and point 6.3 ff ADA, Supplement to OJ EPO 10/2007).

/European Patent Office/

Amazon.com, Inc., Amazon.com Services LLC - Ex. 1017, Page 000261

Europäisches Patentamt
European Patent Office
Office européen des brevets

European Patent Office
80298 MUNICH
GERMANY

Questions about this communication ?
Contact Customer Services at www.epo.org/contact

Tampereen Patenttitoimisto Oy
Visiokatu 1
33720 Tampere
FINLANDE

Date
02.08.16

Reference	Application No./Patent No.
TP109764EP	12845839.5 - 1905 / 2774375
Applicant/Proprietor	
Nokia Technologies Oy	

Communication of amended entries concerning the representative (R. 143(1)(h) EPC)

As requested, for the above-mentioned European patent application / European patent the entries concerning the representative have been amended as follows:

Tampereen Patenttitoimisto Oy
Visiokatu 1
33720 Tampere
FI

The amendment will be recorded in the Register of European Patents.

Receiving Section

Europäisches Patentamt • European Patent Office • Office européen des brevets

MB03005

Amazon.com, Inc., Amazon.com Services LLC - Ex. 1017, Page 000262

Europäisches Patentamt
European Patent Office
Office européen des brevets

European Patent Office
80298 MUNICH
GERMANY

Questions about this communication ?
Contact Customer Services at www.epo.org/contact

Nokia Corporation
Intellectual Property Department
Karakaari 7
02610 Espoo
FINLANDE

Date
02-08-16

Reference	Application No./Patent No.
NC77198EP	12845839.5 - 1905 / 2774375
Applicant/Proprietor	
Nokia Technologies Oy	

Communication pursuant to Article 1(2) of the decision of the President of the EPO dated 12.07.2007 concerning the filing of authorisations (Special edition No. 3, OJ EPO 2007, L.1.)

Concerning the above-mentioned European patent application/patent the EPO has been notified of the appointment of a new representative for the

☒ applicant.

☐ proprietor of the patent.

☐ opponent

☒ A copy of the authorisation/the letter of the new representative is enclosed.

☐ The new representative

has referred to his general authorisation No. .

Subsequent proceedings will be conducted with the new representative

Important note to the users of the automatic debiting procedure (AAD)

Attention is drawn to points 14(d) and (13) AAD.
In case of withdrawal from representation, the automatic debiting procedure does not automatically cease to be effective. It only ceases to be effective on the day on which notification is received of the representative's withdrawal and of his revocation of the automatic debit order. Thus, should you wish to also revoke automatic debit orders being made from your deposit account in relation to the present patent application, you are required to inform the EPO accordingly.

MB03005

Amazon.com, Inc., Amazon.com Services LLC - Ex. 1017, Page 000263

Receiving Section / For the Examining Division / For the Opposition Division / For the Legal Division *)

***) Note**
This communication is issued by/for the department with whom responsibility lies. The Legal Division is responsible for the registration of transfers, changes of name (Articles 71, 72 and 74 EPC and Rules 22 and 85 EPC) as well as for the rectification of the designation of the inventor (Rule 21 EPC) (see Decision of the President of the EPO, OJ EPO 2013, 600). In all other cases, the Receiving Section, the Examining Division or the Opposition Division is responsible, depending on the stage in proceedings.

Amazon.com, Inc., Amazon.com Services LLC - Ex. 1017, Page 000264

Europäisches Patentamt
European Patent Office
Office européen des brevets

General authorisation

Europäisches Patentamt München
06. April 2016
Dir. 5.2.3

Please forward the **original** direct to the EPO, Legal Division (Dir. 5.2.3) in Munich.
Please read the attached notes before completing the form.

1 General authorisation No. (for official use only): 629030.8

2 I (We)
Full name and address of authorisor(s)

Nokia Technologies Oy
Karaportti 3
FI-02610 Espoo
Finland

3 **do hereby authorise**

Full name and address of authorisee: professional representative, legal practitioner, employee, association of representatives – **please specify**

Tampereen Patenttitoimisto Oy (association no. 477)
Visiokatu 1
FI-33720 Tampere
Finland

4 **to represent me (us) in all proceedings established by the European Patent Convention and to act for me (us) in all patent transactions.**

☐ This authorisation includes the power to receive payments on my (our) behalf.

☐ This authorisation shall also apply to the same extent to any proceedings established by the Patent Cooperation Treaty.

5 ☐ Sub-authorisation may be given.

☐ Additional representatives indicated on supplementary sheet.

6 ☐ Please return a copy, supplemented by the general authorisation number, to the authorisor.

Name (printed)	Position within the company (where relevant)
Kari Puranen	Director
Place, Date	**Signature***
Tampere, 9th March, 2016	

7 * The form must bear the personal signature(s) of the authorisor(s). In the case of legal persons, the signature must be that of the person empowered to sign on behalf of the company. If possible, please sign in blue.

EPO 1004 09.11

Amazon.com, Inc., Amazon.com Services LLC - Ex. 1017, Page 000265

14 October 2016

VIA EPOLINE

European Patent Office
Directorate General 2
D-80298 MÜNCHEN
Germany

Our ref.: TP109764EP/TPU

Response to the
Communication pursuant to Rules 70(2) and 70a(2) EPC
European Patent Application No. 12845839.5
Applicant: Nokia Corporation

Dear Sirs,

In response to the official communication dated 7.4.2016, The applicant hereby informs that he wishes to proceed further with the application.

The reply to the search opinion will be filed later on with request for further proceeding.

Yours faithfully,

Timo Pursiainen
Professional representative
Tampereen Patenttitoimisto Oy, Association 477

Europäisches Patentamt
European Patent Office
Office européen des brevets

Letter accompanying subsequently filed items

Representative:
Tampereen Patenttitoimisto Oy
477
Visiokatu 1
33720 Tampere
Finland

Phone: +358-10 227 2600
Fax: +358-10 227 2662
E-mail: mailbox@tampereenpatenttitoimisto.fi

80298 Munich
Germany
Tel. +49(0)89 2399-0 | Fax -4465

P.O. Box 5818
NL-2280 HV Rijswijk
Netherlands
Tel. +31(0)70 340-2040 | Fax -3016

10958 Berlin
Germany
Tel. +49(0)30 25901-0 | Fax -840

The document(s) listed below is (are) subsequently filed documents pertaining to the following application:

Application number	12845839.5
Applicant's or representative's reference	TP109764EP

	Description of document	Original file name	Assigned file name
1	Reply to search opinion/written opinion/IPER	OA 20160407 letter to Patent Office TP109764EP (ID 868435).pdf	WOREPLY-1.pdf

Signatures

Place:	**Tampere**
Date:	**14 October 2016**
Signed by:	**Timo Pursiainen 36563**
Association:	**Tampereen Patenttitoimisto Oy**
Representative name:	**Timo Pursiainen**
Capacity:	**(Representative)**

Amazon.com, Inc., Amazon.com Services LLC - Ex. 1017, Page 000267

Europäisches Patentamt
European Patent Office
Office européen des brevets

Acknowledgement of receipt

We hereby acknowledge receipt of the following subsequently filed document(s):

Submission number	4721344
Application number	EP12845839.5
Date of receipt	14 October 2016
Receiving Office	European Patent Office, The Hague
Your reference	TP109764EP
Applicant	All applicants as on file
Documents submitted	package-data.xml epf1038.pdf (1 p.) ep-sfd-request.xml WOREPLY-1.pdf\OA 20160407 letter to Patent Office TP109764EP (ID 868435).pdf (1 p.)
Submitted by	CN=Timo Pursiainen 36563
Method of submission	Online
Date and time receipt generated	14 October 2016, 16:06 (CEST)
Message Digest	7D:54:EB:89:95:01:47:57:2F:57:FF:0D:8C:30:04:9D:CC:C2:70:A2

Correction by the EPO of errors in debit instructions filed by eOLF
Errors in debit instructions filed by eOLF that are caused by the editing of Form 1038E entries or the continued use of outdated software (all forms) may be corrected automatically by the EPO, leaving the payment date unchanged (see decision T 152/82, OJ EPO 1984, 301 and point 6.3 ff ADA, Supplement to OJ EPO 10/2007).

/European Patent Office/

Amazon.com, Inc., Amazon.com Services LLC - Ex. 1017, Page 000268

Europäisches Patentamt
European Patent Office
Office européen des brevets

European Patent Office
80298 MUNICH
GERMANY

Questions about this communication ?
Contact Customer Services at www.epo.org/contact

Tampereen Patenttitoimisto Oy
Visiokatu 1
33720 Tampere
FINLANDE

Date
23.11.2016

Reference	Application No./Patent No.
TP109764EP	12845839.5 - 1905 / 2774375
Applicant/Proprietor	
Nokia Technologies Oy	

Noting of loss of rights pursuant to Rule 112(1) EPC

The European patent application cited above is deemed to be withdrawn because the invitation to comment on or to correct any deficiencies noted in

☑ the opinion accompanying the (supplementary) European search report

☐ the written opinion of the International Searching Authority or the international preliminary examination report or the explanations pursuant to Rule 45bis.7(e) PCT to the supplementary international search report issued by the EPO

has not been complied with within the time limit specified in the communication issued under Rule 70a EPC (EPO Form 1081/1082/1083/1224) or Rule 161(1) EPC (EPO Form 1226AA), as applicable (R. 70a(3), R. 161(1) EPC).

Means of redress

Request for a decision (R. 112(2) EPC)
If the applicant considers that the finding of the European Patent Office is inaccurate, he may, within a (non-extendable) period of **two months** after notification of this communication, apply in writing for a decision on the matter. The application can only lead to the finding being reversed if this does not actually correspond to the factual or legal situation.

Further processing (Art. 121 EPC)
The legal consequence of the failure to observe the time limit shall be deemed not to have ensued if, within a (non-extendable) period of **two months** after notification of this communication, further processing is requested by payment of the fee prescribed under Article 2(1)12 of the Rules relating to Fees and the omitted act is completed (R. 135(1) EPC).

For the Examining Division

Europäisches Patentamt • European Patent Office • Office européen des brevets

Registered letter

Amazon.com, Inc., Amazon.com Services LLC - Ex. 1017, Page 000269

Europäisches Patentamt
European Patent Office
Office européen des brevets

Request for changes relating to an association of professional representatives

Europäisches Patentamt
München
22. Dez. 2016
Dir. 5.2.3

European Patent Office
Directorate 5.2.3 – Legal Division
80298 Munich
GERMANY

Name of association

Tampereen Patenttitoimisto Oy

Registration No.

477

Address

Visiokatu 1
33720 Tampere
Finland

I. Request for a change in the composition

☐ We request registration of a change in the composition of the association with effect from the date of receipt of the present request at the EPO or from the following subsequent date

Date

Members to be added[1] (see additional sheet where necessary)

Surname	*First name*	*Representative No.*	*Signature*	*Date*

Members to be deleted[1] (see additional sheet where necessary)

Surname	*First name*	*Representative No.*	*Signature*	*Date*

☒ Confirmation by at least one member of the association (see additional sheet where necessary)

Surname	*First name*	*Representative No.*	*Signature*	*Date*

[1] This form is only valid for changes relating to an association. If the address in the list of professional representatives before the European Patent Office (see Article 134(1) EPC) should also be changed, a separate request using EPO Form 52301 (Request for registration of changes relating to an entry in the list of professional representatives before the European Patent Office) should be filed.

EPO 52305 02.16

Duration: 21.12.2016 09:49:10 - 21.12.2016 09:49:31. This page 1 of 2 was completed at 21.12.2016 09:49:20
Received at the EPO on Dec 21, 2016 09:49:31. Page 1 of 2

Amazon.com, Inc., Amazon.com Services LLC - Ex. 1017, Page 000270

II. Request for a change of name[1]

☒ We request registration of a change of name of the association with effect from the date of receipt of the present request at the EPO or from the following subsequent date

Date 1.1.2017

The new name is

Berggren Oy, Tampere

☒ Confirmation by at least one member of the association (see additional sheet where necessary)

Surname	*First name*	*Representative No.*	*Signature*	*Date*
Palmgren	Eero	09238090		21.12.2016

III. Request for a change of address[1]

☐ We request registration of a change of address of the association with effect from the date of receipt of the present request at the EPO or from the following subsequent date

Date

The new address is

☒ Confirmation by at least one member of the association (see additional sheet where necessary)

Surname	*First name*	*Representative No.*	*Signature*	*Date*

IV. Number of annexes (e.g. additional sheet for further members)

EPA 52305 02.16

[1] This form is only valid for changes relating to an association. If the address in the list of professional representatives before the European Patent Office (see Article 134(1) EPC) should also be changed, a separate request using EPO Form 52301 (Request for registration of changes relating to an entry in the list of professional representatives before the European Patent Office) should be filed.

Duration: 21.12.2016 09:49:10 - 21.12.2016 09:49:31. This page 2 of 2 was completed at 21.12.2016 09:49:31
Received at the EPO on Dec 21, 2016 09:49:31. Page 2 of 2

Amazon.com, Inc., Amazon.com Services LLC - Ex. 1017, Page 000271

20 January 2017
VIA EPOLINE

European Patent Office
Directorate General 2
D-80298 MÜNCHEN
Germany

Our ref.: TP109764EP/TPU

Response to the
Communication pursuant to Rules 70(2) and 70a(2) EPC
European Patent Application No. 12845839.5
Applicant: Nokia Corporation

Dear Sirs,

In response to the official communication dated 23.11.2016 the applicant has paid the fee for further processing (Art. 121 EPC).

In response to the official communication dated 7.4.2016, we respectfully present the following:

Please find enclosed new pages 15 and 35—40 to replace pages 15 and 35—40 presently on file. Said pages with the amendments highlighted have also been enclosed for your reference. The amendments made together with the following submissions are intended to address the objections raised by the Examiner.

Amendments

The enclosed new set of claims 1—18 replaces the claims 1—18 presently on file.

Thus, the amended independent claim 1 discloses (amended features underlined):

1. A method comprising:

receiving a block of pixels including a prediction unit;

determining a set of spatial motion vector prediction candidates for the block of pixels; the spatial motion vector prediction candidates being provided with motion information;

determining a subset of spatial motion vector prediction candidate pairs for comparison among all available spatial motion vector prediction candidate pairs in the set of spatial motion vector prediction candidates;

selecting a ~~first~~ spatial motion vector prediction candidate from the set of spatial motion vector prediction candidates as a potential spatial motion vector prediction candidate to be included in a merge list for the prediction unit;

examining the subset to determine~~ing~~ which other spatial motion vector prediction candidate is defined to belong to the same spatial motion vector prediction candidate pair than the selected ~~a subset of spatial motion vector predictions based on the location of the block associated with the first~~ spatial motion vector prediction candidate;

comparing motion information of the selected ~~first~~ spatial motion vector prediction candidate with motion information of the other spatial motion vector prediction candidate~~ in the determined subset of spatial motion vector prediction candidates~~;

if ~~at least one of~~ the comparison~~s~~ indicates that the motion vector information of the other spatial motion vector prediction candidate~~s~~ correspond with the motion vector information of the selected spatial motion vector prediction candidate~~each other~~, excluding the ~~first~~ selected spatial motion vector prediction candidate from the merge list.

The definition "*determining a limited number of spatial motion vector prediction candidate pairs for comparison among all available spatial motion vector prediction candidate pairs in the set of spatial motion vector prediction candidates*" is based on the specification on page 4,

lines 12—14: "*This can be achieved by performing a limited number of motion information comparisons between candidate pairs to remove the redundant candidates rather than comparing every available candidate pair.*"

The definition "*examining the limited number of spatial motion vector prediction candidate pairs to determine which other spatial motion vector prediction candidate is defined to belong to the same spatial motion vector prediction candidate pair than the selected spatial motion vector prediction candidate*" is based on Figures 5a, 5b, 8a and 8b, the specification on page 16, line 26—page 17, line 27.

The expression "*if at least one of the comparisons indicates that the motion vector information of the spatial motion vector prediction candidate~~s~~ correspond with each other, excluding the first spatial motion vector prediction candidate from the merge list*" has been amended to read "*if the comparison indicates that the motion vector information of the other spatial motion vector prediction candidate~~s~~ correspond with the motion vector information of the selected spatial motion vector prediction candidate, excluding the selected spatial motion vector prediction candidate from the merge list*". This is mainly for adapting this definition to the amended claim language.

Thus, all the features of the new claims are disclosed in the application as filed. Hence, the amended claims comply with the Art. 123(2) EPC.

The independent claims are in one-part form, since the two-part form is not appropriate, but it would lead to a complex and misleading claim, which might be misinterpreted.

Clarity (Art. 84 EPC)

To overcome the objection of Section 1.1, claims 6 and 13 are amended so that the expression "*essentially similar motion information*" is amended to read "*the same motion vectors and the same reference indices*". This is based on page 18, lines 32—35: "*Motion comparison*

can be realized by comparing a subset of the whole motion information. For example, only the motion vector values for some or all reference picture lists and/or reference indices for some or all reference picture lists and/or an identifier value assigned to each block to represent its motion information can be compared."

To overcome the objection of Section 1.2, claims 6 and 13 are further amended so that it is now defined that the motion information comprises at least a motion vector and a reference index, and the set of spatial motion vector prediction candidates comprises at least one of:

one or more neighbouring blocks <u>to the left</u> of the prediction unit;

one or more neighbouring blocks <u>above</u> the prediction unit;

one or more <u>cornerwise</u> neighbouring blocks of the prediction unit.

Hence, the objected definitions *on the left side*, *above* and *below* should now have antecedent basis.

Thus, the claims are clear according to Art. 84 EPC.

Novelty (Art. 54 EPC)

The amended independent claim 1 discloses a method comprising:

receiving a block of pixels including a prediction unit;

determining a set of spatial motion vector prediction candidates for the block of pixels; the spatial motion vector prediction candidates being provided with motion information;

determining a subset of spatial motion vector prediction candidate pairs for comparison among all available spatial motion vector prediction candidate pairs in the set of spatial motion vector prediction candidates;

selecting a spatial motion vector prediction candidate from the set of spatial motion vector prediction candidates as a potential spatial motion vector prediction candidate to be included in a merge list for the prediction unit;

examining the subset to determine which other spatial motion vector prediction candidate is defined to belong to the same spatial

motion vector prediction candidate pair than the selected spatial motion vector prediction candidate;

comparing motion information of the selected spatial motion vector prediction candidate with motion information of the other spatial motion vector prediction candidate;

if the comparisons indicates that the motion vector information of the other spatial motion vector prediction candidates correspond with the motion vector information of the selected spatial motion vector prediction candidate, excluding the selected spatial motion vector prediction candidate from the merge list.

D1 describes a system that selects the first two available spatial predictors and performs a duplicate removal process between the two spatial predictor candidates (S_0 and S_1) and one temporal predictor candidate (Col). The duplicate removal process is not considering the locations of the spatial candidates and all three possible combinations of S_0, S_1 and Col are performed "blindly" as follows: S_0 is compared with S_1, S_0 is compared with Col, and S_1 is compared with Col. It may happen that one or both of the selected two spatial predictors are not the best alternatives.

D1 does not disclose *inter alia* “determining a subset of spatial motion vector prediction candidate pairs for comparison among all available spatial motion vector prediction candidate pairs in the set of spatial motion vector prediction candidates”.

D2 (section 8.4.2.1.2 "Derivation process for spatial merging candidates" of JCTVCE603_d8.doc) disqualifies candidates if unavailable, if coded with intra mode, or if the motion of a candidate is identical to motion of another prediction unit within the same coding unit. Thus, it would have been more efficient to represent a coding unit with a larger segmentation instead of splitting it into smaller prediction units and indicating identical motion between those small prediction units.

D2 (section 8.4.2.1.3 "Derivation process of reference indices for temporal merging candidate" of JCTVCE603_d8.doc) further teaches how reference indices can be selected for the temporal motion vector prediction candidate. The approach is very similar to that of D1. First three candidates are selected based on their availability and that selection is followed by checks for all the combinations of the three.

D2 (section 8.4.2.1.4 "Derivation process for luma motion vector prediction") teaches also that "if several motion vectors have the same value, the motion vectors are removed from the list except the motion vector which has the smallest order in the mvpListLX" requiring full search of matching candidates within the candidate list.

D3 proposes to allow additional merge candidates to survive the process described in D2 section 8.4.2.1.2 based on the index of the merge candidate.

D4 section 2.2 provides a summary of D5.

D5 proposes to use a threshold different from zero when comparing similarity of two motion vectors, but does not provide additional teachings on selecting the prediction candidates for comparison.

Thus the amended claim 1 is novel in view of any of the cited documents D1 to D5 in accordance to Art. 54(1) EPC.

The same analogy applies to the other independent claims as well. Thus, the independent claims 1, 9 and 15—18 are novel in sense of Art. 54(1) EPC.

Inventive step (A. 56 EPC)

D1 is regarded as the closest prior art in the official communication. As discussed in the previous novelty discussion, D1 fails to disclose D1 does not disclose *inter alia* “determining a subset of spatial motion vector prediction candidate pairs for comparison among all available

spatial motion vector prediction candidate pairs in the set of spatial motion vector prediction candidates".

The features of the amended claim 1 differing from D1 provide the technical effect of comparing only a subset of the candidate pairs but so that the first two found candidates need not be the only candidates to be compared. Hence, it may be possible that although each available candidate pair were not examined, still a better candidate might be selected compared to the situation in which only two first candidates were compared. Thus, starting from the D1, the technical problem to be solved is how to improve the selection of spatial motion vector prediction candidates.

The problem is solved by determining a subset of spatial motion vector prediction candidate pairs for comparison among all available spatial motion vector prediction candidate pairs in the set of spatial motion vector prediction candidates.

When looking at D1 and considering how to solve the objective technical problem, the skilled person would not find solution to the problem.

D1 would not teach a skilled person to arrive at the claimed invention. On the contrary, D1 teaches to stop the search after two first candidates has been found.

When looking at D1 and considering how to solve the objective technical problem, the skilled person would not find a solution from D2, since D2 discloses an approach very similar to D1.

Based on previous a combination of D1 and D2 would not teach a skilled person to arrive at the claims.

Documents D3 to D5 do not disclose anything which, when combined with D1, would lead a skilled person to the solution as claimed in the amended independent claims.

Consequently, the independent claims 1, 9 and 15—18 involve an inventive step over the cited prior art in sense of Art. 56 EPC.

In view of the amendments and submissions now made, the applicant respectfully submits that the application as a whole is now in order for allowance. If the Examiner is of the opinion that further objections should be raised, then a further written communication is requested. In the event that the Examiner considers any further objections cannot be dealt with in writing, then oral proceedings via videoconference are requested in precaution under Article 116 EPC.

Yours faithfully,

Timo Pursiainen
Professional representative
Berggren Oy, Tampere, Association 477

ENCL. New claims 1—18 (pages 35—40)
Amended page 15
Pages with amendments marked

Europäisches Patentamt
European Patent Office
Office européen des brevets

Letter accompanying subsequently filed items

Representative:
Berggren Oy, Tampere
477
Visiokatu 1
33720 Tampere
Finland

Phone: +358-10 227 2000
Fax: +358-10 227 2662
E-mail: tampere@berggren.fi

80298 Munich
Germany
Tel. +49(0)89 2399-0 | Fax -4465

P.O. Box 5818
2280 HV Rijswijk
Netherlands
Tel. +31(0)70 340-2040 | Fax -3016

10958 Berlin
Germany
Tel. +49(0)30 25901-0 | Fax -840

The document(s) listed below is (are) subsequently filed documents pertaining to the following application:

Application number	12845839.5
Applicant's or representative's reference	TP109764EP

	Description of document	Original file name	Assigned file name
1	Reply to examination report	OA 20160407 response TP109764EP.pdf	EXRE3-1.pdf
2	Amended claims (clean copy)	OA 20160407 amended claims TP109764EP (ID 892183).pdf	CLMS-1.pdf
3	Amended claims with annotations	OA 20160407 amended claims M-U TP109764EP (ID 892180).pdf	CLMS-HWA-1.pdf
4	Amended description (clean copy)	OA 20160407 amended page 15 TP109764EP (ID 892187).pdf	DESC-1.pdf
5	Amended description with annotations	OA 20160407 amended page 15 (M-U) TP109764EP (ID 892179).pdf	DESC-HWA-1.pdf

	Fees	Factor applied	Fee schedule	Amount to be paid
15-1	122 Fee for further processing (non fee related cases)	1	255.00	255.00
	Total:		**EUR**	**255.00**

	Payment	
1	Mode of payment	Debit from deposit account
	Currency:	EUR
	The European Patent Office is hereby authorised, to debit from the deposit account with the EPO any fees and costs indicated on the fees page.	
	Deposit account number:	28150007
	Account holder:	Berggren Oy, Tampere
2	Refund/Reimburserment	
	Reimbursement (if any) to be made to EPO deposit account:	28150007
	Account holder:	Berggren Oy, Tampere

Signatures

Place:	Tampere
Date:	20 January 2017
Signed by:	Timo Pursiainen 36563
Association:	Berggren Oy, Tampere
Representative name:	Timo Pursiainen
Capacity:	(Representative)

Figure 6b illustrates another example of spatial and temporal prediction of a prediction unit. In this example the block 606 of the previous frame 605 uses bi-directional prediction based on the block 609 of the frame preceding the frame 605 and on the block 612 succeeding the current frame 600. The temporal motion vector prediction for the current block 601 may be formed by using both the motion vectors 607, 614 or either of them.

The operation of the prediction list modifier 363 will now be described in more detail with reference to the flow diagram of Figures 5a and 5b. The prediction list modifier 363 initializes a motion vector prediction list to default values in block 500 of Figure 5a. The prediction list modifier 363 may also initialize a list index to an initial value such as zero. Then, in block 501 the prediction list modifier checks whether there are any motion vector candidates to process. If there is at least one motion vector candidate in the predictor set for processing, the prediction list modifier 363 generates the next motion vector candidate which may be a temporal motion vector or a spatial motion vector. The comparison can be an identicality/equivalence check or comparing the (absolute) difference against a threshold or any other similarity metric.

In the following, a merge process for motion information coding according to an example embodiment will be described in more detail. The encoder creates a list of motion prediction candidates from which one of the candidates is to be signalled as the motion information for the current coding unit or prediction unit. The motion prediction candidates may consist of several spatial motion predictions and a temporal motion prediction. The spatial candidates can be obtained from the motion information of e.g. the spatial neighbour blocks A0, A1, B0, B1, B2, whose motion information is used as spatial candidate motion predictions. The temporal motion prediction candidate may be obtained by processing the motion of a block in a frame other than the current frame. In this example embodiment, the encoder operations to construct the merge list for the spatial candidates may include the following. The operations may be carried out by the prediction list modifier 363, for example.

A maximum number of spatial motion prediction candidates to be included in the merge list may be defined. This maximum number may have been stored, for example, to the memory 58 of the apparatus 50, or to another appropriate place. It is also possible to determine the maximum number by using other means, or it may be determined in the software of the encoder of the apparatus 50.

In some embodiments the maximum number of spatial motion prediction candidates to be included in the merge list is four but in some embodiments the maximum number may be less than four or greater than four.

In this example the spatial motion prediction candidates are the spatial neighbour blocks A0, A1, B0, B1, B2. The spatial motion vector prediction candidate A1 is located on the left side of the prediction unit when the encoding/decoding order is from left to right and from top to bottom of the frame, slice or another entity to be encoded/decoded. Respectively, the spatial motion vector prediction candidate B1 is located above the prediction unit~~. third~~; the spatial motion vector prediction candidate B0 is on the right side of the spatial motion vector prediction candidate B1; the spatial motion vector prediction candidate A0 is below the spatial motion vector prediction candidate A1; and the spatial motion vector prediction

Amazon.com, Inc., Amazon.com Services LLC - Ex. 1017, Page 000282

Figure 6b illustrates another example of spatial and temporal prediction of a prediction unit. In this example the block 606 of the previous frame 605 uses bi-directional prediction based on the block 609 of the frame preceding the frame 605 and on the block 612 succeeding the current frame 600. The temporal motion vector prediction for the current block 601 may be formed by using both the motion vectors 607, 614 or either of them.

The operation of the prediction list modifier 363 will now be described in more detail with reference to the flow diagram of Figures 5a and 5b. The prediction list modifier 363 initializes a motion vector prediction list to default values in block 500 of Figure 5a. The prediction list modifier 363 may also initialize a list index to an initial value such as zero. Then, in block 501 the prediction list modifier checks whether there are any motion vector candidates to process. If there is at least one motion vector candidate in the predictor set for processing, the prediction list modifier 363 generates the next motion vector candidate which may be a temporal motion vector or a spatial motion vector. The comparison can be an identicality/equivalence check or comparing the (absolute) difference against a threshold or any other similarity metric.

In the following, a merge process for motion information coding according to an example embodiment will be described in more detail. The encoder creates a list of motion prediction candidates from which one of the candidates is to be signalled as the motion information for the current coding unit or prediction unit. The motion prediction candidates may consist of several spatial motion predictions and a temporal motion prediction. The spatial candidates can be obtained from the motion information of e.g. the spatial neighbour blocks A0, A1, B0, B1, B2, whose motion information is used as spatial candidate motion predictions. The temporal motion prediction candidate may be obtained by processing the motion of a block in a frame other than the current frame. In this example embodiment, the encoder operations to construct the merge list for the spatial candidates may include the following. The operations may be carried out by the prediction list modifier 363, for example.

A maximum number of spatial motion prediction candidates to be included in the merge list may be defined. This maximum number may have been stored, for example, to the memory 58 of the apparatus 50, or to another appropriate place. It is also possible to determine the maximum number by using other means, or it may be determined in the software of the encoder of the apparatus 50.

In some embodiments the maximum number of spatial motion prediction candidates to be included in the merge list is four but in some embodiments the maximum number may be less than four or greater than four.

In this example the spatial motion prediction candidates are the spatial neighbour blocks A0, A1, B0, B1, B2. The spatial motion vector prediction candidate A1 is located on the left side of the prediction unit when the encoding/decoding order is from left to right and from top to bottom of the frame, slice or another entity to be encoded/decoded. Respectively, the spatial motion vector prediction candidate B1 is located above the prediction unit; the spatial motion vector prediction candidate B0 is on the right side of the spatial motion vector prediction candidate B1; the spatial motion vector prediction candidate A0 is below the spatial motion vector prediction candidate A1; and the spatial motion vector prediction

Amazon.com, Inc., Amazon.com Services LLC - Ex. 1017, Page 000283

Claims:

1. A method comprising:

receiving a block of pixels including a prediction unit;

determining a set of spatial motion vector prediction candidates for the block of pixels;

the spatial motion vector prediction candidates being provided with motion information;

determining a limited number of spatial motion vector prediction candidate pairs for comparison among all available spatial motion vector prediction candidate pairs in the set of spatial motion vector prediction candidates;

selecting a ~~first~~ spatial motion vector prediction candidate from the set of spatial motion vector prediction candidates as a potential spatial motion vector prediction candidate to be included in a merge list for the prediction unit;

examining the limited number of spatial motion vector prediction candidate pairs to determin~~ing~~ which other spatial motion vector prediction candidate is defined to belong to the same spatial motion vector prediction candidate pair than the selected ~~a subset of spatial motion vector predictions based on the location of the block associated with the first~~ spatial motion vector prediction candidate;

comparing motion information of the selected ~~first~~ spatial motion vector prediction candidate with motion information of the other spatial motion vector prediction candidate ~~in the determined subset of spatial motion vector prediction candidates~~;

if ~~at least one of~~ the comparison~~s~~ indicates that the motion vector information of the other spatial motion vector prediction candidate~~s~~ correspond with the motion vector information of the selected spatial motion vector prediction candidate~~each other~~, excluding the ~~first~~ selected spatial motion vector prediction candidate from the merge list.

2. The method according to claim 1 comprising selecting spatial motion vector prediction candidates from the set of spatial motion vector prediction candidates as the potential spatial motion vector prediction candidate in a predetermined order.

3. The method according to claim 1 or 2, comprising comparing motion information of the potential spatial motion vector prediction candidate with motion information of at most one other spatial motion vector prediction candidate of the set of spatial motion vector prediction candidates.

4. The method according to any of the claims 1 to 3 comprising examining whether the received block of pixels is divided into a first prediction unit and a second prediction unit; and if so, excluding the potential spatial motion vector prediction candidate from the merge list if the prediction unit is the second prediction unit.

Amazon.com, Inc., Amazon.com Services LLC - Ex. 1017, Page 000284

5. The method according to any of the claims 1 to 4, further comprising

determining a maximum number of spatial motion vector prediction candidates to be included in a merge list; and

limiting the number of spatial motion vector prediction candidates in the merge list smaller or equal to the maximum number .

6. The method according to any of the claims 1 to 5, wherein the motion information comprises at least a motion vector and a reference index, and the set of spatial motion vector prediction candidates comprises at least one of:

one or more neighbouring blocks to the left of the prediction unit;

one or more neighbouring blocks above the prediction unit;

one or more cornerwise neighbouring blocks of the prediction unit,

the method further comprising:

examining, if the number of spatial motion vector prediction candidates in the merge list is smaller than the maximum number;

if so, examining whether a prediction unit to which the potential spatial motion vector prediction candidate belongs is available for motion prediction;

if so, performing at least one of the following:

~~for~~ if the potential spatial motion vector prediction candidate is located on the left side of the prediction unit, excluding the potential spatial motion vector prediction candidate from the merge list if any of the following conditions are fulfilled:

- the received block of pixels is vertically divided into a first prediction unit and a second prediction unit, and the prediction unit is the second prediction unit;
- the received block of pixels is horizontally divided into a first prediction unit and a second prediction unit, and if the prediction unit is the second prediction unit, and the potential spatial motion vector prediction candidate has the same motion vectors and the same reference indices~~essentially similar motion information~~ than the spatial motion vector prediction candidate above the prediction unit;

~~for~~ if the potential spatial motion vector prediction candidate is located above the prediction unit, excluding the potential spatial motion vector prediction candidate from the merge list if any of the following conditions are fulfilled:

- the received block of pixels is horizontally divided into a first prediction unit and a second prediction unit, and the prediction unit is the second prediction unit;
- the potential spatial motion vector prediction candidate has the same motion vectors and the same reference indices~~essentially similar motion information~~ than the spatial motion vector prediction candidate on the left side of the prediction unit;

Amazon.com, Inc., Amazon.com Services LLC - Ex. 1017, Page 000285

~~for~~ if the potential spatial motion vector prediction candidate~~, which~~ is located on the right side of the potential spatial motion vector prediction candidate above the prediction unit, excluding the potential spatial motion vector prediction candidate from the merge list if the potential spatial motion vector prediction candidate has the same motion vectors and the same reference indices~~essentially similar motion information~~ than the spatial motion vector prediction candidate above the prediction unit;

~~for~~ if the potential spatial motion vector prediction candidate~~, which~~ is located below the potential spatial motion vector prediction candidate on the left side of the prediction unit, excluding the potential spatial motion vector prediction candidate from the merge list if the potential spatial motion vector prediction candidate has the same motion vectors and the same reference indices~~essentially similar motion information~~ than the spatial motion vector prediction candidate on the left side of the prediction unit;

~~for~~ if the potential spatial motion vector prediction candidate is cornerwise neighbouring the prediction unit, excluding the potential spatial motion vector prediction candidate from the merge list if any of the following conditions are fulfilled:

- all the other potential spatial motion vector prediction candidates have been included in the merge list;
- the potential spatial motion vector prediction candidate has the same motion vectors and the same reference indices~~essentially similar motion information~~ than the spatial motion vector prediction candidate above the prediction unit;
- the potential spatial motion vector prediction candidate has the same motion vectors and the same reference indices~~essentially similar motion information~~ than the spatial motion vector prediction candidate on the left side of the prediction unit.

7. The method according to any of the claims 1 to 6 further comprising including a temporal motion prediction candidate into the merge list.

8. The method according to any of the claims 1 to 7 comprising selecting one motion vector prediction candidate from the merge list to represent a motion vector prediction for the block of pixels.

9. A method comprising:

receiving an encoded block of pixels including a prediction unit;

determining a set of spatial motion vector prediction candidates for the encoded block of pixels; the spatial motion vector prediction candidates being provided with motion information;

determining a limited number of spatial motion vector prediction candidate pairs for comparison among all available spatial motion vector prediction candidate pairs in the set of spatial motion vector prediction candidates;

Amazon.com, Inc., Amazon.com Services LLC - Ex. 1017, Page 000286

selecting a ~~first~~ spatial motion vector prediction candidate from the set of spatial motion vector prediction candidates as a potential spatial motion vector prediction candidate to be included in a merge list for the prediction unit;

examining the limited number of spatial motion vector prediction candidate pairs to determine~~ing~~ which other spatial motion vector prediction candidate is defined to belong to the same spatial motion vector prediction candidate pair than the selected ~~a subset of spatial motion vector predictions based on the location of the block associated with the first~~ spatial motion vector prediction candidate;

comparing motion information of the selected ~~first~~ spatial motion vector prediction candidate with motion information of the ~~an~~other spatial motion vector prediction candidate ~~of the set of spatial motion vector prediction candidates~~;

if ~~at least one of~~ the comparison~~s~~ indicates that the motion vector information of the other spatial motion vector prediction candidate~~s~~ corresponds with the motion vector information of the selected spatial motion vector prediction candidate~~each other~~, excluding the ~~first~~ selected spatial motion vector prediction candidate from the merge list.

10. The method according to claim 9 comprising comparing motion information of the potential spatial motion vector prediction candidate with motion information of at most one other spatial motion vector prediction candidate of the set of spatial motion vector prediction candidates.

11. The method according to claim 9 or 10 comprising examining whether the received encoded block of pixels is divided into a first prediction unit and a second prediction unit; and if so, excluding the potential spatial motion vector prediction candidate from the merge list if the prediction unit is the second prediction unit.

12. The method according to any of the claims 9 to 11, further comprising

determining a maximum number of spatial motion vector prediction candidates to be included in a merge list; and

limiting the number of spatial motion vector prediction candidates in the merge list smaller or equal to the maximum number.

Amazon.com, Inc., Amazon.com Services LLC - Ex. 1017, Page 000287

13. The method according to any of the claims 9 to 12, wherein the motion information comprises at least a motion vector and a reference index, and the set of spatial motion vector prediction candidates comprises at least one of:

one or more neighbouring blocks to the left of the prediction unit;

one or more neighbouring blocks above the prediction unit;

one or more cornerwise neighbouring blocks of the prediction unit,

the method further comprising:

examining, if the number of spatial motion vector prediction candidates in the merge list smaller than the maximum number;

if so, examining whether a prediction unit to which the potential spatial motion vector prediction candidate belongs is available for motion prediction;

if so, performing at least one of the following:

~~for~~ if the potential spatial motion vector prediction candidate is located on the left side of the prediction unit, excluding the potential spatial motion vector prediction candidate from the merge list if any of the following conditions are fulfilled:

- the received encoded block of pixels is vertically divided into a first prediction unit and a second prediction unit, and the prediction unit is the second prediction unit;
- the received encoded block of pixels is horizontally divided into a first prediction unit and a second prediction unit, and if the prediction unit is the second prediction unit, and the potential spatial motion vector prediction candidate has the same motion vectors and the same reference indices~~essentially similar motion information~~ than the spatial motion vector prediction candidate above the prediction unit;

~~for~~ if the potential spatial motion vector prediction candidate is located above the prediction unit, excluding the potential spatial motion vector prediction candidate from the merge list if any of the following conditions are fulfilled:

- the received encoded block of pixels is horizontally divided into a first prediction unit and a second prediction unit, and the prediction unit is the second prediction unit;
- the potential spatial motion vector prediction candidate has the same motion vectors and the same reference indices~~essentially similar motion information~~ than the spatial motion vector prediction candidate on the left side of the prediction unit;

~~for~~ if the potential spatial motion vector prediction candidate, which is located on the right side of the potential spatial motion vector prediction candidate above the prediction unit, excluding the potential spatial motion vector prediction candidate from the merge list if the potential spatial motion vector

Amazon.com, Inc., Amazon.com Services LLC - Ex. 1017, Page 000288

prediction candidate has the same motion vectors and the same reference indices~~essentially similar motion information~~ than the spatial motion vector prediction candidate above the prediction unit;

~~for~~ if the potential spatial motion vector prediction candidate, which is located below the potential spatial motion vector prediction candidate on the left side of the prediction unit, excluding the potential spatial motion vector prediction candidate from the merge list if the potential spatial motion vector prediction candidate has the same motion vectors and the same reference indices~~essentially similar motion information~~ than the spatial motion vector prediction candidate on the left side of the prediction unit;

~~for~~ if the potential spatial motion vector prediction candidate is cornerwise neighbouring the prediction unit, excluding the potential spatial motion vector prediction candidate from the merge list if any of the following conditions are fulfilled:

- all the other potential spatial motion vector prediction candidates have been included in the merge list;
- the potential spatial motion vector prediction candidate has the same motion vectors and the same reference indices~~essentially similar motion information~~ than the spatial motion vector prediction candidate above the prediction unit;
- the potential spatial motion vector prediction candidate has the same motion vectors and the same reference indices~~essentially similar motion information~~ than the spatial motion vector prediction candidate on the left side of the prediction unit.

14. The method according to any of the claims 9 to 13 comprising selecting one motion vector prediction candidate from the merge list to represent a motion vector prediction for the received encoded block of pixels.

15. An apparatus comprising means for performing a method according to any one of claims 1 to 8.

16. An apparatus comprising means for performing a method according to any one of claims 9 to 14.

17. A computer-readable media having computer-readable instructions thereon which, when executed by one or more processors, cause one or more processors to perform a method of any one of claims 1 to 8.

18. A computer-readable media having computer-readable instructions thereon which, when executed by one or more processors, cause one or more processors to perform a method of any one of claims 9 to 14.

Amazon.com, Inc., Amazon.com Services LLC - Ex. 1017, Page 000289

Claims:

1. A method comprising:

receiving a block of pixels including a prediction unit;

determining a set of spatial motion vector prediction candidates for the block of pixels;

the spatial motion vector prediction candidates being provided with motion information;

determining a limited number of spatial motion vector prediction candidate pairs for comparison among all available spatial motion vector prediction candidate pairs in the set of spatial motion vector prediction candidates;

selecting a spatial motion vector prediction candidate from the set of spatial motion vector prediction candidates as a potential spatial motion vector prediction candidate to be included in a merge list for the prediction unit;

examining the limited number of spatial motion vector prediction candidate pairs to determine which other spatial motion vector prediction candidate is defined to belong to the same spatial motion vector prediction candidate pair than the selected spatial motion vector prediction candidate;

comparing motion information of the selected spatial motion vector prediction candidate with motion information of the other spatial motion vector prediction candidate;

if the comparison indicates that the motion vector information of the other spatial motion vector prediction candidate correspond with the motion vector information of the selected spatial motion vector prediction candidate, excluding the selected spatial motion vector prediction candidate from the merge list.

2. The method according to claim 1 comprising selecting spatial motion vector prediction candidates from the set of spatial motion vector prediction candidates as the potential spatial motion vector prediction candidate in a predetermined order.

3. The method according to claim 1 or 2, comprising comparing motion information of the potential spatial motion vector prediction candidate with motion information of at most one other spatial motion vector prediction candidate of the set of spatial motion vector prediction candidates.

4. The method according to any of the claims 1 to 3 comprising examining whether the received block of pixels is divided into a first prediction unit and a second prediction unit; and if so, excluding the potential spatial motion vector prediction candidate from the merge list if the prediction unit is the second prediction unit.

5. The method according to any of the claims 1 to 4, further comprising

determining a maximum number of spatial motion vector prediction candidates to be included in a merge list; and

Amazon.com, Inc., Amazon.com Services LLC - Ex. 1017, Page 000290

limiting the number of spatial motion vector prediction candidates in the merge list smaller or equal to the maximum number .

6. The method according to any of the claims 1 to 5, wherein the motion information comprises at least a motion vector and a reference index, and the set of spatial motion vector prediction candidates comprises at least one of:

one or more neighbouring blocks to the left of the prediction unit;

one or more neighbouring blocks above the prediction unit;

one or more cornerwise neighbouring blocks of the prediction unit,

the method further comprising:

examining, if the number of spatial motion vector prediction candidates in the merge list is smaller than the maximum number;

if so, examining whether a prediction unit to which the potential spatial motion vector prediction candidate belongs is available for motion prediction;

if so, performing at least one of the following:

if the potential spatial motion vector prediction candidate is located on the left side of the prediction unit, excluding the potential spatial motion vector prediction candidate from the merge list if any of the following conditions are fulfilled:

- the received block of pixels is vertically divided into a first prediction unit and a second prediction unit, and the prediction unit is the second prediction unit;
- the received block of pixels is horizontally divided into a first prediction unit and a second prediction unit, and if the prediction unit is the second prediction unit, and the potential spatial motion vector prediction candidate has the same motion vectors and the same reference indices than the spatial motion vector prediction candidate above the prediction unit;

if the potential spatial motion vector prediction candidate is located above the prediction unit, excluding the potential spatial motion vector prediction candidate from the merge list if any of the following conditions are fulfilled:

- the received block of pixels is horizontally divided into a first prediction unit and a second prediction unit, and the prediction unit is the second prediction unit;
- the potential spatial motion vector prediction candidate has the same motion vectors and the same reference indices than the spatial motion vector prediction candidate on the left side of the prediction unit;

if the potential spatial motion vector prediction candidate is located on the right side of the potential spatial motion vector prediction candidate above the prediction unit, excluding the potential spatial motion vector prediction candidate from the merge list if the potential spatial motion vector prediction candidate has the same motion vectors and the same reference indices than the spatial motion vector prediction candidate above the prediction unit;

Amazon.com, Inc., Amazon.com Services LLC - Ex. 1017, Page 000291

if the potential spatial motion vector prediction candidate is located below the potential spatial motion vector prediction candidate on the left side of the prediction unit, excluding the potential spatial motion vector prediction candidate from the merge list if the potential spatial motion vector prediction candidate has the same motion vectors and the same reference indices than the spatial motion vector prediction candidate on the left side of the prediction unit;

if the potential spatial motion vector prediction candidate is cornerwise neighbouring the prediction unit, excluding the potential spatial motion vector prediction candidate from the merge list if any of the following conditions are fulfilled:

- all the other potential spatial motion vector prediction candidates have been included in the merge list;
- the potential spatial motion vector prediction candidate has the same motion vectors and the same reference indices than the spatial motion vector prediction candidate above the prediction unit;
- the potential spatial motion vector prediction candidate has the same motion vectors and the same reference indices than the spatial motion vector prediction candidate on the left side of the prediction unit.

7. The method according to any of the claims 1 to 6 further comprising including a temporal motion prediction candidate into the merge list.

8. The method according to any of the claims 1 to 7 comprising selecting one motion vector prediction candidate from the merge list to represent a motion vector prediction for the block of pixels.

9. A method comprising:

receiving an encoded block of pixels including a prediction unit;

determining a set of spatial motion vector prediction candidates for the encoded block of pixels; the spatial motion vector prediction candidates being provided with motion information;

determining a limited number of spatial motion vector prediction candidate pairs for comparison among all available spatial motion vector prediction candidate pairs in the set of spatial motion vector prediction candidates;

selecting a spatial motion vector prediction candidate from the set of spatial motion vector prediction candidates as a potential spatial motion vector prediction candidate to be included in a merge list for the prediction unit;

examining the limited number of spatial motion vector prediction candidate pairs to determine which other spatial motion vector prediction candidate is defined to belong to the same spatial motion vector prediction candidate pair than the selected spatial motion vector prediction candidate;

comparing motion information of the selected spatial motion vector prediction candidate with motion information of the other spatial motion vector prediction candidate;

Amazon.com, Inc., Amazon.com Services LLC - Ex. 1017, Page 000292

if the comparisos indicates that the motion vector information of the other spatial motion vector prediction candidate corresponds with the motion vector information of the selected spatial motion vector prediction candidate, excluding the selected spatial motion vector prediction candidate from the merge list.

10. The method according to claim 9 comprising comparing motion information of the potential spatial motion vector prediction candidate with motion information of at most one other spatial motion vector prediction candidate of the set of spatial motion vector prediction candidates.

11. The method according to claim 9 or 10 comprising examining whether the received encoded block of pixels is divided into a first prediction unit and a second prediction unit; and if so, excluding the potential spatial motion vector prediction candidate from the merge list if the prediction unit is the second prediction unit.

12. The method according to any of the claims 9 to 11, further comprising

determining a maximum number of spatial motion vector prediction candidates to be included in a merge list; and

limiting the number of spatial motion vector prediction candidates in the merge list smaller or equal to the maximum number.

13. The method according to any of the claims 9 to 12, wherein the motion information comprises at least a motion vector and a reference index, and the set of spatial motion vector prediction candidates comprises at least one of:

one or more neighbouring blocks to the left of the prediction unit;

one or more neighbouring blocks above the prediction unit;

one or more cornerwise neighbouring blocks of the prediction unit,

the method further comprising:

examining, if the number of spatial motion vector prediction candidates in the merge list smaller than the maximum number;

if so, examining whether a prediction unit to which the potential spatial motion vector prediction candidate belongs is available for motion prediction;

if so, performing at least one of the following:

if the potential spatial motion vector prediction candidate is located on the left side of the prediction unit, excluding the potential spatial motion vector prediction candidate from the merge list if any of the following conditions are fulfilled:

- the received encoded block of pixels is vertically divided into a first prediction unit and a second prediction unit, and the prediction unit is the second prediction unit;

Amazon.com, Inc., Amazon.com Services LLC - Ex. 1017, Page 000293

– the received encoded block of pixels is horizontally divided into a first prediction unit and a second prediction unit, and if the prediction unit is the second prediction unit, and the potential spatial motion vector prediction candidate has the same motion vectors and the same reference indices than the spatial motion vector prediction candidate above the prediction unit;

if the potential spatial motion vector prediction candidate is located above the prediction unit, excluding the potential spatial motion vector prediction candidate from the merge list if any of the following conditions are fulfilled:

– the received encoded block of pixels is horizontally divided into a first prediction unit and a second prediction unit, and the prediction unit is the second prediction unit;

– the potential spatial motion vector prediction candidate has the same motion vectors and the same reference indices than the spatial motion vector prediction candidate on the left side of the prediction unit;

if the potential spatial motion vector prediction candidate, which is located on the right side of the potential spatial motion vector prediction candidate above the prediction unit, excluding the potential spatial motion vector prediction candidate from the merge list if the potential spatial motion vector prediction candidate has the same motion vectors and the same reference indices than the spatial motion vector prediction candidate above the prediction unit;

if the potential spatial motion vector prediction candidate, which is located below the potential spatial motion vector prediction candidate on the left side of the prediction unit, excluding the potential spatial motion vector prediction candidate from the merge list if the potential spatial motion vector prediction candidate has the same motion vectors and the same reference indices than the spatial motion vector prediction candidate on the left side of the prediction unit;

if the potential spatial motion vector prediction candidate is cornerwise neighbouring the prediction unit, excluding the potential spatial motion vector prediction candidate from the merge list if any of the following conditions are fulfilled:

– all the other potential spatial motion vector prediction candidates have been included in the merge list;

– the potential spatial motion vector prediction candidate has the same motion vectors and the same reference indices than the spatial motion vector prediction candidate above the prediction unit;

– the potential spatial motion vector prediction candidate has the same motion vectors and the same reference indices than the spatial motion vector prediction candidate on the left side of the prediction unit.

Amazon.com, Inc., Amazon.com Services LLC - Ex. 1017, Page 000294

14. The method according to any of the claims 9 to 13 comprising selecting one motion vector prediction candidate from the merge list to represent a motion vector prediction for the received encoded block of pixels.

15. An apparatus comprising means for performing a method according to any one of claims 1 to 8.

16. An apparatus comprising means for performing a method according to any one of claims 9 to 14.

17. A computer-readable media having computer-readable instructions thereon which, when executed by one or more processors, cause one or more processors to perform a method of any one of claims 1 to 8.

18. A computer-readable media having computer-readable instructions thereon which, when executed by one or more processors, cause one or more processors to perform a method of any one of claims 9 to 14.

Amazon.com, Inc., Amazon.com Services LLC - Ex. 1017, Page 000295

Europäisches Patentamt
European Patent Office
Office européen des brevets

Acknowledgement of receipt

We hereby acknowledge receipt of the following subsequently filed document(s):

Submission number	4971246
Application number	EP12845839.5
Date of receipt	20 January 2017
Receiving Office	European Patent Office, The Hague
Your reference	TP109764EP
Applicant	All applicants as on file
Documents submitted	package-data.xml epf1038.pdf (2 p.) CLMS-1.pdf\OA 20160407 amended claims TP109764EP (ID 892183).pdf (6 p.) DESC-1.pdf\OA 20160407 amended page 15 TP109764EP (ID 892187).pdf (1 p.) ep-sfd-request.xml EXRE3-1.pdf\OA 20160407 response TP109764EP.pdf (8 p.) CLMS-HWA-1.pdf\OA 20160407 amended claims M-U TP109764EP (ID 892180).pdf (6 p.) DESC-HWA-1.pdf\OA 20160407 amended page 15 (M-U) TP109764EP (ID 892179).pdf (1 p.)
Submitted by	CN=Timo Pursiainen 36563
Method of submission	Online
Date and time receipt generated	20 January 2017, 12:31 (CET)
Message Digest	5E:B2:89:3F:CD:1C:0A:7A:DB:0E:9A:DB:37:EB:DD:33:C3:03:12:13

Correction by the EPO of errors in debit instructions filed by eOLF
Errors in debit instructions filed by eOLF that are caused by the editing of Form 1038E entries or the continued use of outdated software (all forms) may be corrected automatically by the EPO, leaving the payment date unchanged (see decision T 152/82,

Amazon.com, Inc., Amazon.com Services LLC - Ex. 1017, Page 000296

OJ EPO 1984, 301 and point 6.3 ff ADA, Supplement to OJ EPO 10/2007).

/European Patent Office/

Amazon.com, Inc., Amazon.com Services LLC - Ex. 1017, Page 000297

Europäisches Patentamt
European Patent Office
Office européen des brevets

European Patent Office
80298 MUNICH
GERMANY

Questions about this communication ?
Contact Customer Services at www.epo.org/contact

Berggren Oy, Tampere
Visiokatu 1
33720 Tampere
FINLANDE

Date
03.02.17

Reference	Application No./Patent No.
TP109764EP	12845839.5 - 1905 / 2774375
Applicant/Proprietor	
Nokia Technologies Oy	

Decision on the request for further processing under Rule 135(3) EPC

The request for further processing received on 20.01.17 has been granted (Art. 121(2) EPC).

☑ The legal consequence notified in the communication dated 23.11.16 that the application was deemed to be withdrawn shall not ensue.

☐ The legal consequence shall not ensue.

☐ The refusal of the application dated . . . . . shall not ensue.

☐ The legal consequence notified in the communication dated . . . . . that the particular loss of rights occurred shall not ensue.

☐ The time limit set in the communication dated . . . . . is deemed to have been met.

The procedure shall be continued/the particular loss of rights shall not ensue (Art. 121(3) EPC).

Important information in case of a PACE request
If a PACE request has been validly filed for the application, the applicant is herewith informed that the application is removed from the PACE programme. A second PACE request for that application during the same stage of the procedure will not be processed (see OJ EPO 2015, A93, point 4).

For the Examining Division

Europäisches Patentamt • European Patent Office • Office européen des brevets

Registered letter

Amazon.com, Inc., Amazon.com Services LLC - Ex. 1017, Page 000298

Europäisches Patentamt
European Patent Office
Office européen des brevets

European Patent Office
80298 MUNICH
GERMANY

Questions about this communication ?
Contact Customer Services at www.epo.org/contact

Berggren Oy, Tampere
Visiokatu 1
33720 Tampere
FINLANDE

Date
14.02.19

Reference	Application No./Patent No.
TP109764EP	12845839.5 - 1209 / 2774375
Applicant/Proprietor	
Nokia Technologies Oy	

Expected start of examination

Please be informed that according to current work planning, substantive examination of the above-mentioned application is expected to begin on or after 15.04.19

If the European patent application is withdrawn, refused or deemed to be withdrawn before substantive examination has begun, the examination fee is refunded at a rate of 100% (Article 11(a) RFees as amended with effect from 1 July 2016).

For the Examining Division

Europäisches Patentamt • European Patent Office • Office européen des brevets

Amazon.com, Inc., Amazon.com Services LLC - Ex. 1017, Page 000299

Europäisches Patentamt
European Patent Office
Office européen des brevets

Application No.: 12845839.5

Substantive examination has started on 29.05.19 (see Notice from the European Patent Office dated 29.01.2013, OJ EPO 2013, 153).

For the Examining Division

Amazon.com, Inc., Amazon.com Services LLC - Ex. 1017, Page 000300

Europäisches Patentamt
European Patent Office
Office européen des brevets

European Patent Office
Postbus 5818
2280 HV Rijswijk
NETHERLANDS
Tel: +31 70 340 2040
Fax: +31 70 340 3016

Berggren Oy, Tampere
Visiokatu 1
33720 Tampere
FINLANDE

Formalities Officer
Name: Rowell, Mark
Tel: +31 70 340 - 2887
or call
+31 (0)70 340 45 00

Substantive Examiner
Name: Mayer, Claudia
Tel: +31 70 340 - 8438

Application No.	Ref.	Date
12 845 839.5 - 1209	TP109764EP	06.06.2019
Applicant Nokia Technologies Oy		

Communication pursuant to Article 94(3) EPC

The examination of the above-identified application has revealed that it does not meet the requirements of the European Patent Convention for the reasons enclosed herewith. If the deficiencies indicated are not rectified the application may be refused pursuant to Article 97(2) EPC.

You are invited to file your observations and insofar as the deficiencies are such as to be rectifiable, to correct the indicated deficiencies within a period

of 4 months

from the notification of this communication, this period being computed in accordance with Rules 126(2) and 131(2) and (4) EPC. One set of amendments to the description, claims and drawings is to be filed within the said period on separate sheets (R. 50(1) EPC).

If filing amendments, you must identify them and indicate the basis for them in the application as filed. Failure to meet either requirement may lead to a communication from the Examining Division requesting that you correct this deficiency (R. 137(4) EPC).

In case you withdraw the application within the above-mentioned period, the examination fee will be refunded at a rate of 50% (Art. 11 (b) RFees).

Failure to comply with this invitation in due time will result in the application being deemed to be withdrawn (Art. 94(4) EPC).

Registered letter

Mayer, Claudia
Primary Examiner
For the Examining Division

Enclosure(s): 7 page/s reasons (Form 2906)

Amazon.com, Inc., Amazon.com Services LLC - Ex. 1017, Page 000302

The examination is being carried out on the **following application documents**

Description, Pages

1-14, 16-34	as published	
15	filed in electronic form on	20-01-2017

Claims, Numbers

1-18	filed in electronic form on	20-01-2017

Drawings, Sheets

1/13-13/13	as published

1 The amendments filed with the letter dated 20.01.2017 introduce subject-matter which extends beyond the content of the application as filed, contrary to Article 123(2) EPC.

1.1 Claims 1 and 13 have been amended to recite
"the set of spatial motion vector prediction candidates comprises at least one of:
one or more neighbouring blocks to the left of the prediction unit;
one or more neighbouring blocks above the prediction unit;
one or more cornerwise neighbouring blocks of the prediction unit".

1.2 The term "cornerwise neighbouring blocks" appears to refer to the neighbouring blocks A0, B0, B2 as shown in fig. 9 of the application.

However, claims 1 and 13 further define "if the potential spatial motion vector prediction candidate is cornerwise neighbouring the prediction unit, excluding the potential spatial motion vector prediction candidate from the merge list if any of the following conditions are fulfilled:
- all the other potential spatial motion vector prediction candidates have been included in the merge list;
- the potential spatial motion vector prediction candidate has the same motion vectors and the same reference indices than the spatial motion vector prediction candidate above the prediction unit;

Amazon.com, Inc., Amazon.com Services LLC - Ex. 1017, Page 000303

- the potential spatial motion vector prediction candidate has the same motion vectors and the same reference indices than the spatial motion vector prediction candidate on the left side of the prediction unit".

According to the description, p. 16, l. 26 - p. 17, l. 31, and figures 5b, 8b, these conditions apply to block B2 only, and not to blocks A0 and B0.

1.3 The amendment therefore introduces subject-matter which extends beyond the content of the application as filed (Article 123(2) EPC).

2 The application does not meet the requirements of Article 84 EPC.

2.1 Claims 1 and 9 only very vaguely define "spatial motion vector predictor candidates" without specifying with which neighbouring blocks these spatial motion vector predictor candidates are associated. The description, p. 14, l. 5-8, p. 15, l. 32 - p. 16, l. 4, and fig. 9, discloses a specific arrangement of spatially neighbouring blocks A0, A1, B0, B1, B2 (below-left, left, above-right, above, above-left), and no other arrangement of spatially neighbouring blocks appears to be foreseen. Claims 1 and 9 are therefore not supported by the description as required by Article 84 EPC.

2.2 Claims 1 and 9 define "determining a limited number of spatial motion vector predictor candidate pairs for comparison". While formal support may be seen in the description, p. 4, l. 12-14, it is doubtful whether this disclosure taken alone is sufficiently clear and complete for the invention to be carried out by a person skilled in the art (Article 83 EPC, Guidelines F-IV 6.4). Sufficient disclosure for an embodiment of the invention can only be seen in the description, p. 16, l. 26 - p. 17, l. 31, and figures 5a, 5b, 8a, 8b, which discloses the only detailed example of carrying out the invention.
Claims 1 and 9 are therefore not supported by the description as required by Article 84 EPC.

2.3 Claims 4, 6, 11 and 13 very generally define a "first prediction unit" and a "second prediction unit" into which the block of pixels is divided. However, from the description, p. 18, l. 27-29, it is clear that these are the "first prediction unit" and "second prediction unit" in coding/decoding order. Claims 4, 6, 11 and 13 are therefore not supported by the description as required by Article 84 EPC.

Amazon.com, Inc., Amazon.com Services LLC - Ex. 1017, Page 000304

2.4 Claims 6 and 13 refer to a "maximum number", which however is only defined in claims 5 and 12, respectively. The definition of the subject-matter of claims 6 and 13 as depending on any of claims 1-4 and 9-11, respectively, is therefore rendered unclear (Article 84 EPC).

2.5 The feature of "selecting one motion vector prediction candidate from the merge list to represent a motion vector prediction for the block of pixels" is defined in dependent claim 8. However, this feature is not presented as optional in the description, p. 22, l. 19-20, and figure 4b, and should therefore be included in claim 1 and, mutatis mutandis, in claim 9.

3 The present application does not meet the requirements of Article 52(1) EPC because the subject-matter of claims 1, 9 and 15-18 is not new within the meaning of Article 54(1) and (2) EPC.

3.1 With respect to the applicant's arguments presented is his letter dated 20.01.2017 concerning the disclosure of D1 the following is noted.
Claims 1 and 9 define "determining a limited number of spatial motion vector prediction candidate pairs for comparison among all available spatial motion vector prediction candidate pairs in the set of spatial motion vector prediction candidates". This does not exclude the case of selecting the candidate pair S_0-S_1, S_0 and S_1 being the first two available spatial motion vector prediction candidates for comparison, as disclosed by D1 (D1: section 2.2.1, table 2, right hand column).

Therefore, using the following mapping between the features of the claim and D1,

- "set of spatial motion vector prediction candidates": set A, B, C, D, E,
- "all available spatial motion vector prediction candidate pairs in the set of spatial motion vector prediction candidates": A-A, A-B, A-C, A-D, A-E, B-C, B-D, B-E, C-D, C-E, D-E,
- "a limited number of spatial motion vector prediction candidate pairs for comparison": S_0-S_1,

D1 is considered to disclose the subject-matter of claims 1 and 9, as detailed in the following.

3.2 Document D1 explicitly refers to document D2 (see reference [1] of D1). The teaching of D2 is therefore regarded as incorporated into document D1 (see Guidelines, G-IV, 8).

Amazon.com, Inc., Amazon.com Services LLC - Ex. 1017, Page 000305

3.3 Document D1 discloses:

A method comprising:
receiving a block of pixels including a prediction unit;
determining a set of spatial motion vector prediction candidates for the block of pixels (D1: section 2.2.1, table 2, right hand column. The set A, B, C, D, E is a "set of spatial motion vector prediction candidates"); the spatial motion vector prediction candidates being provided with motion information;
determining a limited number of spatial motion vector prediction candidate pairs for comparison among all available spatial motion vector prediction candidate pairs in the set of spatial motion vector prediction candidates (D1: section 2.2.1, table 2, right hand column. D1 discloses selecting the first two available spatial candidates S_0 and S_1 from the set of candidates A, B, C, D, E. The pair S_0-S_1 that is compared in the removal process is "a limited number of spatial motion vector prediction candidate pairs for comparison" among "all available spatial motion vector prediction candidate pairs in the set of spatial motion vector prediction candidates" A-A, A-B, A-C, A-D, A-E, B-C, B-D, B-E, C-D, C-E, D-E);
selecting a spatial motion vector prediction candidate from the set of spatial motion vector prediction candidates as a potential spatial motion vector prediction candidate to be included in a merge list for the prediction unit;
examining the limited number of spatial motion vector prediction candidate pairs to determine which other spatial motion vector prediction candidate is defined to belong to the same spatial motion vector prediction candidate pair than the selected spatial motion vector prediction candidate;
comparing motion information of the selected spatial motion vector prediction candidate with motion information of the other spatial motion vector prediction candidate;
if the comparison indicates that the motion vector information of the other spatial motion vector prediction candidate correspond with the motion vector information of the selected spatial motion vector prediction

candidate, excluding the selected spatial motion vector prediction candidate from the merge list (D1: section 2.2.1, table 2, right hand column).

The subject-matter of claim 1 is therefore not new (Article 54(1) and (2) EPC).

3.4 The same objection as raised against claim 1 in section 3.3 of this communication also applies, mutatis mutandis, to claims 9 and 15-18 since their subject-matter corresponds to the subject-matter of claim 1.
The subject-matter of claims 9 and 15-18 is therefore not new (Article 54(1) and (2) EPC).

4 Dependent claims 2-8 and 10-14 do not appear to contain any additional features which, in combination with the features of any claim to which they refer, meet the requirements of the EPC with respect to novelty (Article 54(1) and (2) EPC) and/or inventive step (Article 56 EPC).

4.1 Claim 2 (lack of novelty, Article 54(1) and (2) EPC):
D1: section 2.2.1, table 2, second row (A, B, C, D, E).

4.2 Claims 3 and 10 (lack of novelty, Article 54(1) and (2) EPC):
D1: section 2.2.1, table 2, last row (S_0 vs S_1).

4.3 Claims 4 and 11 (lack of novelty, Article 54(1) and (2) EPC):
D2: section 8.4.2.1.4 (see also D3: section 1, fig. 1, which provides a summary the procedure of HM3.0 in case of 2NxN, Nx2N PU mode ("According to the current HM3.0, motion information of the candidate that's located inside the left or upper neighboring PU is always not to be used [...]."));; see also section 3.2 of this communication.

4.4 Claims 5 and 12 (lack of novelty, Article 54(1) and (2) EPC):
D1: section 2.2.1.

4.5 Claim 7 (lack of novelty, Article 54(1) and (2) EPC):
D1: section 2.2.1, table 2.

4.6 Claims 8 and 14 (lack of novelty, Article 54(1) and (2) EPC):
D2: section 8.4.2.1.3; see also section 3.2 of this communication.

5 In order to overcome the above objections, the following amendments are suggested:

Amazon.com, Inc., Amazon.com Services LLC - Ex. 1017, Page 000307

- Incorporation of claims 5-6 and 8 and 12-13 and 8 into claims 1 and 9, repectively to define the embodiment according to the description, p. 16, l. 26 - p. 17, l. 31, and figures 5a, 5b, 8a, 8b (see sections 2.2 and 2.4-2.5a bove).
- Definition of the location of the spatially neighbouring blocks in accordance with the description, p. 14, l. 5-8, p. 15, l. 32 - p. 16, l. 4, fig. 9, specifying a left neighbouring block A1, above neighbouring block B1, above-right neighbouring block B0, below-left neighbouring block A0 and above-left neighbouring block B2 (see sections 1 and 2.1).
- Definition that the "first prediction unit" and "second prediction unit" are the "first prediction unit" and "second prediction unit" in coding/decoding order according to the description, p. 18, l. 27-29 (see section 2.3 above).

It is noted that this suggestion is only for assisting the applicant in his decision on how to proceed. It in no way precludes consideration of alternative solutions submitted by the applicant. The responsibility for determining the text of the application (Article 113(2) EPC) and in particular for defining the subject-matter for which protection is sought remains with the applicant.

6 The applicant is invited to file new claims that take account of the above comments.

6.1 The attention of the applicant is drawn to the fact that the application may not be amended in such a way that it contains subject-matter which extends beyond the content of the application as filed (Article 123(2) EPC).

6.2 In order to facilitate the examination of the conformity of the amended application with the requirements of Article 123(2) EPC, the applicant should clearly identify the amendments made, irrespective of whether they concern amendments by addition, replacement or deletion, and indicate the passages of the application as filed on which these amendments are based.

6.3 When filing amended claims, the applicant is requested to comment on novelty and inventive step, in particular by explaining the invention as claimed in terms of problem-solution with regard to the closest prior art.

Amazon.com, Inc., Amazon.com Services LLC - Ex. 1017, Page 000308

6.4 Independent claims should be drafted in accordance with Rule 43(1) EPC, which in the present case would be appropriate, with those features known in combination from the prior art being placed in the preamble (Rule 43(1)(a) EPC) and the remaining features being included in the characterising part (Rule 43(1)(b) EPC).

6.5 To meet the requirements of Rule 42(1)(b) EPC, documents D1-D3 should be identified in the description and the relevant background art disclosed therein should be briefly discussed.

Amazon.com, Inc., Amazon.com Services LLC - Ex. 1017, Page 000309

NOKIA

8 July 2019

EPO - M
101
24. Juli 2019

European Patent Office
Ms. C. Weber
FO Digitisation Support
MU Direktorat 1342
Bayerstraße 34
80335 Munich

ZPL

Recordation of Address Changes

Nokia

Nokia Solutions and Networks GmbH & Co. KG

Office Address:

Lorenzstrasse 10

70435 Stuttgart

Germany

Dear Ms. Weber,

The offices of Nokia Technologies Oy and Nokia Solutions and Networks Oy (pls. see attached the excerpt from the commercial register) moved. Therefore, please be so kind to record the applicant's address changes as follows:

Nokia Technologies Oy
Karakaari 7
02610 Espoo
Finland

Nokia Solutions and Networks Oy
Karakaari 7
02610 Espoo
Finland

Sitz der Gesellschaft: München / Registered office: Munich
Registergericht: München / Commercial registry: Munich, HRA 88537
WEEE-Reg.-Nr.: DE 52984304
Persönlich haftende Gesellschafterin / General Partner: Nokia Solutions and Networks Management GmbH
Geschäftsleitung / Board of Directors:
Dr. Wolfgang Hackenberg, Ralf Niederberger
Vorsitzender des Aufsichtsrats / Chairman of supervisory board: Hans-Jürgen Bill
Sitz der Gesellschaft: München / Registered office: Munich
Registergericht: München / Commercial registry: Munich, HRB 163416

© Nokia 2019

Amazon.com, Inc., Amazon.com Services LLC - Ex. 1017, Page 000310

NOKIA

We thank you for your assistance in this matter.

Best regards,

Emmanuelle WETZEL
Deputy Head Patenting

Domencio MENZIETTI
Senior IP Corporate Counsel

Enc.

© Nokia 2015

Amazon.com, Inc., Amazon.com Services LLC - Ex. 1017, Page 000311

Finnish Patent and Registration Office
Trade Register
FI-00091 PRH, FINLAND
tel. +358 (0)29 509 5000
registry@prh.fi

Business ID: 2655044-9
Date and time of creating the document: 01.07.2019 13:36:42

TRANSLATION OF THE EXTRACT FROM THE TRADE REGISTER

01.07.2019 13:36:41 the details in the register

Identifiers

Name	Nokia Technologies Oy
Business ID	2655044-9
Entered in the register	26.11.2014
Company type	Limited company
Contact details:	
Postal address	PL 226 00045 Nokia Group
Street address	Karakaari 7 02610 Espoo
Telephone	010 44 88 000
Home page address	www.nokia.com

Name details

Name	Nokia Technologies Oy
Parallel company name	Nokia Technologies Ltd

Registered office Helsinki

Share capital

Share capital	2.500,00 €
Number of shares	100 pcs

Financial period

Financial period	01.01 - 31.12

Financial statements

The last financial statements submitted	01.01.2018 - 31.12.2018

Representation

Statutory representation:
Under the law, the Board of Directors represents the company.
Representation based on position:
By the Chair of the Board and the Managing Director, each on their own, and by any two Board members jointly

Persons

role	surname, first name(s) / company name	date of birth / identity code	citizenship
Chair of the Board of Directors	Lukander, Jenni Karoliina	20.05.1974	Citizen of Finland
Member of the Board of Directors	Hakoranta, Eeva Kaarina	21.07.1964	Citizen of Finland
Member of the Board of Directors	James, Ulla Maaret	13.08.1960	Citizen of Finland
Member of the Board of Directors	Uskela, Sami Tapio	20.06.1975	Citizen of Finland
Holder of a procuration	Ainasto, Riikka-Leena	14.11.1975	Citizen of Finland
Holder of a procuration	Alvinen, Jari Tapio	21.08.1961	Citizen of Finland
Holder of a procuration	Anttila, Mika Untamo	27.07.1962	Citizen of Finland
Holder of a procuration	Gray, Robert Martin	20.11.1969	Citizen of the United States
Holder of a procuration	Hakoranta, Eeva Kaarina	21.07.1964	Citizen of Finland
Holder of a procuration	Honkasalo, Harri Tapani	01.12.1961	Citizen of Finland
Holder of a procuration	Huopaniemi, Jyri Petteri	08.08.1968	Citizen of Finland
Holder of a procuration	Hyvärinen, Leena Johanna	19.02.1982	Citizen of Finland
Holder of a procuration	Laakso, Janne Tapio	07.11.1973	Citizen of Finland
Holder of a procuration	Leväjärvi, Merja Riitta	01.02.1977	Citizen of Finland
Holder of a procuration	London, Sonja Aurora	08.02.1975	Citizen of Finland
Holder of a procuration	Lukander, Jenni Karoliina	20.05.1974	Citizen of Finland
Holder of a procuration	Martikainen, Piia Susanna	17.04.1976	Citizen of Finland
Holder of a procuration	Melin, Paul Henry Kristian	02.03.1973	Citizen of Finland
Holder of a procuration	Möttönen, Aura Helena	23.09.1978	Citizen of Finland
Holder of a procuration	Nihtilä, Jukka Rainer	11.04.1964	Citizen of Finland
Holder of a procuration	Nuortila, Hanna-Liisa	27.04.1959	Citizen of Finland
Holder of a procuration	Puranen, Kari Kalevi	06.01.1957	Citizen of Finland
Holder of a procuration	Riekkinen, Sannamari	04.12.1966	Citizen of Finland
Holder of a procuration	Rouhesmaa, Antti Jussi	27.07.1965	Citizen of Finland
Holder of a procuration	Sandström, Jan Mikael	02.11.1962	Citizen of Finland
Holder of a procuration	Savikurki, Hanna Annukka	27.02.1968	Citizen of Finland

Holder of a procuration	Soininen, Teemu Pekka	25.02.1972	Citizen of Finland
Holder of a procuration	Taponen, Teo Eerik	30.01.1972	Citizen of Finland
Holder of a procuration	Tiusanen, Mikko Tuomas	27.10.1977	Citizen of Finland
Holder of a procuration	Vaquer, Jérémie	03.05.1975	Citizen of France

Representation by the holders of a procuration as follows: by two jointly, or by any of them jointly with any Board member.

Auditor	PricewaterhouseCoopers Oy	0486406-8	
Auditor with principal responsibility	Karppinen, Pasi Antero	27.07.1971	Citizen of Finland

Name history

Nokia Technologies Oy 26.11.2014 -

The information has been printed automatically from the Trade Register system. Printed on headed notepaper of the Finnish Patent and Registration Office, the document is original without a signature.

Ella Koski
Client Advisor

FINNISH PATENT AND REGISTRATION OFFICE

Finnish Patent and Registration Office
Trade Register
FI-00091 PRH, FINLAND
tel. +358 (0)29 509 5000
registry@prh.fi

Business ID: 2058430-6
Date and time of creating the document: 01.07.2019 13:37:45

TRANSLATION OF THE EXTRACT FROM THE TRADE REGISTER

01.07.2019 13:37:44 the details in the register

Identifiers

Name	Nokia Solutions and Networks Oy
Business ID	2058430-6
Entered in the register	13.09.2006
Company type	Limited company
Contact details:	
Postal address	PL 226 00045 Nokia Group
Street address	Karakaari 7 02610 Espoo

Name details

Name	Nokia Solutions and Networks Oy
Auxiliary company name	NSN Finland

Registered office Helsinki

Share capital

Share capital	100.000.000,00 €
Number of shares	200 pcs

Financial period

Financial period	01.01 - 31.12

Financial statements

The last financial statements submitted	01.01.2018 - 31.12.2018

Representation

Statutory representation:
Under the law, the Board of Directors represents the company.
Representation based on position:
By the Board member and the Managing Director jointly, and by any two Board members jointly

Persons

role	surname, first name(s) / company name	date of birth / identity code	citizenship

Chair of the Board of Directors	Uitto, Tommi Juhani	28.08.1969	Citizen of Finland
Member of the Board of Directors	Rönnberg, Peter Mikael	19.07.1959	Citizen of Finland
Member of the Board of Directors	Salovaara, Jani Johannes	07.04.1979	Citizen of Finland
Holder of a procuration	Artamo, Atte Niilo	20.11.1972	Citizen of Finland
Holder of a procuration	Dalgleish, John William	15.03.1959	Citizen of Britain
Holder of a procuration	French, Barry Hall	23.12.1963	Citizen of the United States
Holder of a procuration	Hiulumäki, Rami Tapani	12.03.1980	Citizen of Finland
Holder of a procuration	Hovi, Juha-Pekka Kalevi	28.02.1968	Citizen of Finland
Holder of a procuration	Hämäläinen, Markku Niilo Vihtori	01.06.1966	Citizen of Finland
Holder of a procuration	Hänninen, Jari Ilmari	21.02.1959	Citizen of Finland
Holder of a procuration	Junttila, Miika Samuli	28.09.1982	Citizen of Finland
Holder of a procuration	Kontu, Jonna Liisa	31.12.1974	Citizen of Finland
Holder of a procuration	Korhonen, Miika Matias Einari	24.11.1988	Citizen of Finland
Holder of a procuration	Koskela, Antti Akseli	02.03.1971	Citizen of Finland
Holder of a procuration	Laaksonen, Nina Maria Mikaela	23.04.1974	Citizen of Finland
Holder of a procuration	Lehtonen, Tomi Kalevi	18.02.1963	Citizen of Finland
Holder of a procuration	Malila, Nina Irene	11.02.1963	Citizen of Finland
Holder of a procuration	Mandelin, Johanna Maria	15.02.1985	Citizen of Finland
Holder of a procuration	Meklin, Miikka Vilho	26.03.1971	Citizen of Finland
Holder of a procuration	Mentula, Marika Susanna	28.08.1974	Citizen of Finland
Holder of a procuration	Niinimäki, Esa Ville Ilmari	15.09.1976	Citizen of Finland
Holder of a procuration	Nordenswan, Carl Mikael	15.03.1985	Citizen of Finland
Holder of a procuration	Nyberg, Ulla Maria	16.04.1980	Citizen of Finland
Holder of a procuration	O'Flaherty, Bláthnaid Aine	03.03.1972	Citizen of Ireland
Holder of a procuration	Ohvo, Timo Olavi	04.05.1978	Citizen of Finland
Holder of a procuration	Rantanen, Marko Petteri	23.12.1969	Citizen of Finland
Holder of a procuration	Rönnberg, Peter Mikael	19.07.1959	Citizen of Finland
Holder of a procuration	Salovaara, Jani Johannes	07.04.1979	Citizen of Finland

Holder of a procuration	Sissala, Tommy Kalevi	01.08.1967	Citizen of Finland
Holder of a procuration	Sulander, Jaakko Akseli	28.05.1976	Citizen of Finland
Holder of a procuration	Sundström, Pekka Valtteri	21.03.1968	Citizen of Finland
Holder of a procuration	Suri, Rajeev	10.10.1967	Citizen of Singapore
Holder of a procuration	Talonpoika, Pia Elena	10.03.1967	Citizen of Finland
Holder of a procuration	Talvimäki, Kirsi Marjukka Irena	22.04.1977	Citizen of Finland
Holder of a procuration	Tieaho, Riikka Maria	24.12.1975	Citizen of Finland
Holder of a procuration	Tolonen, Joose Henrik	10.10.1985	Citizen of Finland
Holder of a procuration	Turunen, Jouni Antero	27.09.1969	Citizen of Finland
Holder of a procuration	Vaquer, Jérémie	03.05.1975	Citizen of France
Holder of a procuration	Viitanen, Katherine Ingrid	08.08.1975	Citizen of Australia
Holder of a procuration	Virtanen, Pasi Tapani	15.09.1972	Citizen of Finland

Representation by the holders of a procuration as follows: by two jointly, or by any of them jointly with any Board member.

Auditor	PricewaterhouseCoopers Oy	0486406-8	
Auditor with principal responsibility	Karppinen, Pasi Antero	27.07.1971	Citizen of Finland

Name history

Nokia Solutions and Networks Oy 19.08.2013 -

Nokia Siemens Networks Oy 01.04.2007 - 18.08.2013

NSN Finland Oy 13.09.2006 - 31.03.2007

The information has been printed automatically from the Trade Register system. Printed on headed notepaper of the Finnish Patent and Registration Office, the document is original without a signature.

REGISTRATION OFFICE

Kaski
Client Advisor

Europäisches Patentamt
European Patent Office
Office européen des brevets

European Patent Office
80298 MUNICH
GERMANY

Questions about this communication ?
Contact Customer Services at www.epo.org/contact

Berggren Oy, Tampere
Visiokatu 1
33720 Tampere
FINLANDE

Date
31.07.19

Reference	Application No./Patent No.
TP109764EP	12845839.5 - 1209 / 2774375
Applicant/Proprietor	
Nokia Technologies Oy	

Communication

concerning the registration of amendments relating to

☐ a transfer (R. 22 and 85 EPC)

☑ entries pertaining to the applicant / the proprietor (R. 143(1)(f) EPC)

As requested, the entries pertaining to the applicant of the above-mentioned European patent application / to the proprietor of the above-mentioned European patent have been amended to the following:

AL AT BE BG CH CY CZ DE DK EE ES FI FR GB GR HR HU IE IS IT LI LT LU
LV MC MK MT NL NO PL PT RO RS SE SI SK SM TR
Nokia Technologies Oy
Karakaari 7
02610 Espoo/FI

The registration of the changes has taken effect on 24.07.19.

In the case of a published application / a patent, the change will be recorded in the European Patent Register and published in the European Patent Bulletin (Section I.12 / II.12).

Your attention is drawn to the fact that, in the case of the registration of a transfer, any automatic debit order only ceases to be effective from the date of its express revocation (cf. point 14(c) of the Arrangements for the automatic debiting procedure, Supplementary publication 5 - OJ EPO 2017).

Receiving Section / For the Examining Division / For the Opposition Division / For the Legal Division *)

Europäisches Patentamt • European Patent Office • Office européen des brevets

*) See note.

Amazon.com, Inc., Amazon.com Services LLC - Ex. 1017, Page 000318

Note
This communication is issued by/for the department with whom responsibility lies. The Legal Division is responsible for the registration of transfers, changes of name (Articles 71, 72 and 74 EPC and Rules 22 and 85 EPC) as well as for the rectification of the designation of the inventor (Rule 21 EPC) (see Decision of the President of the EPO, OJ EPO 2013, 600). In all other cases, the Receiving Section, the Examining Division or the Opposition Division is responsible, depending on the stage in proceedings.

Amazon.com, Inc., Amazon.com Services LLC - Ex. 1017, Page 000319

BERGGREN

7 October 2019
VIA EPOLINE

European Patent Office
D-80298 MÜNCHEN
Germany

Our ref.: TP109764EP TPU/EIP

EUROPEAN PATENT APPLICATION NO. 12845839.5
APPLICANT: NOKIA TECHNOLOGIES OY

Dear Sirs,

We hereby request the European Patent Office to grant an extension of two months to the period for filing a response to the communication pursuant to Art. 94(3) EPC, dated 6 June 2019.

Yours very truly,

Timo Pursiainen
BERGGREN OY (477)
Professional representative

HELSINKI JYVÄSKYLÄ KUOPIO LAHTI LAPPEENRANTA OULU SEINÄJOKI TAMPERE TURKU HOBOKEN, USA

Berggren Oy

Postal address: PO Box 16, 00101 Helsinki, Finland
Visiting address, Headquarters: Eteläinen Rautatiekatu 10 A, 00100 Helsinki, Finland
Business ID 2635899-1
VAT FI26358991 Domicile Helsinki
Nordea FI57 1573 3000 0154 11 | SWIFT NDEAFIHH
Danske Bank FI85 8000 1700 0901 04 | SWIFT DABAFIHH
Tel.: +358 10 227 2000
Fax: +358 10 227 2001
E-mail: email@berggren.fi
www.berggren.fi

Europäisches Patentamt
European Patent Office
Office européen des brevets

Letter accompanying subsequently filed items

Representative:
Berggren Oy, Tampere
477
Visiokatu 1
33720 Tampere
Finland

Phone: +358-10 227 2000
Fax: +358-10 227 2662
E-mail: email@berggren.fi

80298 Munich
Germany
Tel. +49(0)89 2399-0 | Fax -4465

P.O. Box 5818
2280 HV Rijswijk
Netherlands
Tel. +31(0)70 340-2040 | Fax -3016

10958 Berlin
Germany
Tel. +49(0)30 25901-0 | Fax -840

The document(s) listed below is (are) subsequently filed documents pertaining to the following application:

Application number	12845839.5
Applicant's or representative's reference	TP109764EP

	Description of document	Original file name	Assigned file name
1	Request for extension of time limit during examination procedure	OA 20190606 extension request TP109764EP (ID 4672685).pdf	EXRE92-1.pdf

	Payment	
1	Method of payment	Not specified

Signatures

Place:	**Tampere**
Date:	**09 October 2019**
Signed by:	**Timo Pursiainen 36563**
Association:	**Berggren Oy, Tampere**
Representative name:	**Timo Pursiainen**
Capacity:	**(Representative)**

Europäisches Patentamt
European Patent Office
Office européen des brevets

Acknowledgement of receipt

We hereby acknowledge receipt of the following subsequently filed document(s):

Submission number	7937033
Application number	EP12845839.5
Date of receipt	09 October 2019
Receiving Office	European Patent Office, The Hague
Your reference	TP109764EP
Applicant	All applicants as on file
Documents submitted	package-data.xml epf1038.pdf (1 p.) ep-sfd-request.xml EXRE92-1.pdf\OA 20190606 extension request TP109764EP (ID 4672685).pdf (1 p.)
Submitted by	CN=Timo Pursiainen 36563
Method of submission	Online
Date and time receipt generated	09 October 2019, 11:03 (CEST)
Message Digest	E4:87:37:3A:A0:A7:EC:74:ED:16:23:F6:3B:C7:D5:DD:05:32:DF:7F

Correction by the EPO of errors in debit instructions filed by eOLF
Errors in debit instructions filed by eOLF that are caused by the editing of Form 1038E entries or the continued use of outdated software (all forms) may be corrected automatically by the EPO, leaving the payment date unchanged (see decision T 152/82, OJ EPO 1984, 301 and point 6.3 ff ADA, Supplement to OJ EPO 10/2007).

/European Patent Office/

Amazon.com, Inc., Amazon.com Services LLC - Ex. 1017, Page 000322

Europäisches Patentamt
European Patent Office
Office européen des brevets

European Patent Office
80298 MUNICH
GERMANY

Questions about this communication ?
Contact Customer Services at www.epo.org/contact

Berggren Oy, Tampere
Visiokatu 1
33720 Tampere
FINLANDE

Date
16.10.19

Reference	Application No./Patent No.
TP109764EP	12845839.5 - 1209 / 2774375
Applicant/Proprietor	
Nokia Technologies Oy	

Extension of time limit pursuant to Rule 132(2) EPC

Examination procedure

With reference to your request, the time limit for replying to the communication pursuant to Article 94(3) EPC dated 06.06.19 has been extended

by 2 months

to a total of 6 months

from the date of notification of the above-mentioned communication.

Please note: To the extent that your request exceeded the above extension, your request has been refused.

Note
The granting of extensions to time limits is governed by the Implementing Regulations to the EPC and the Guidelines for Examination in the EPO, E-VIII, 1.6. A request for extension, which would result in the total period set exceeding six months, must be reasoned and supported by evidence.

If no reply to the communication is received in due time, the European patent application will be deemed to be withdrawn (Art. 94(4) EPC).

Amazon.com, Inc., Amazon.com Services LLC - Ex. 1017, Page 000323

Important information in case of a PACE request
If a PACE request has been validly filed for the application, the applicant is herewith informed that with the grant of the request for extension of time limit the application is removed from the PACE programme. A second PACE request for that application during the same stage of the procedure will not be processed (see OJ EPO 2015, A93, point 4).

For the Examining Division

Amazon.com, Inc., Amazon.com Services LLC - Ex. 1017, Page 000324

BERGGREN

16 December 2019
Via Epoline

European Patent Office
D-80298 München

Our ref: TP109764EP
Re: Communication pursuant to Article 94(3) EPC
EUROPEAN PATENT APPLICATION NO. 12845839.5 - 1209
"METHOD FOR VIDEO CODING AND AN APPARATUS"
APPLICANT: NOKIA TECHNOLOGIES OY

Dear Sirs

We refer to the official Communication pursuant to Art. 94(3) dated 6 June 2019 and wish to submit the following in support of the above European Patent Application.

Amendments

The enclosed new set of claims 1—13 replaces the claims 1—20 presently on file. The enclosed pages 4 and 4a of the description replace the page 4 presently on file.

Thus, the amended independent claim 1 discloses (amended features underlined):

1. A method comprising:

receiving a block of pixels including a prediction unit;

determining for the block of pixels a set of spatial motion vector prediction candidates ~~for the block of pixels~~ located below-left, left, above-left, above and above-right of the prediction unit; the spatial motion vector prediction candidates being provided with motion information comprising at least a motion vector and a reference index;

determining a ~~limited number~~subset of spatial motion vector prediction candidate pairs among existing spatial motion vector prediction candidate pairs for comparison among all available spatial motion vector prediction candidate pairs in the set of spatial motion vector prediction candidates;

selecting a spatial motion vector prediction candidate from the set of spatial motion vector prediction candidates as a potential spatial motion vector prediction candidate to be included in a merge list for the prediction unit;

examining the ~~limited number~~subset of spatial motion vector prediction candidate pairs to determine which other spatial motion vector prediction candidate is defined to belong to the same spatial motion vector prediction candidate pair than the selected spatial motion vector prediction candidate;

HELSINKI JYVÄSKYLÄ KUOPIO LAHTI LAPPEENRANTA OULU SEINÄJOKI TAMPERE TURKU HOBOKEN, USA

Berggren Oy

Postal address: PO Box 16, 00101 Helsinki, Finland
Visiting address, Headquarters: Eteläinen Rautatiekatu 10 A, 00100 Helsinki, Finland
Business ID 2635899-1
VAT FI26358991 Domicile Helsinki
Nordea FI57 1573 3000 0154 11 | SWIFT NDEAFIHH
Danske Bank FI85 8000 1700 0901 04 | SWIFT DABAFIHH
Tel.: +358 10 227 2000
Fax: +358 10 227 2001
E-mail: email@berggren.fi
www.berggren.fi

comparing motion information of the selected spatial motion vector prediction candidate with motion information of the other spatial motion vector prediction candidate;

if the comparison indicates that the motion vector information of the other spatial motion vector prediction candidate corresponds with the motion vector information of the selected spatial motion vector prediction candidate, excluding the selected spatial motion vector prediction candidate from the merge list;

wherein the method further comprises selecting one motion vector prediction candidate from the merge list to represent a motion vector prediction for the block of pixels;

characterised in that the method further comprises:

determining a maximum number of spatial motion vector prediction candidates to be included in a merge list;

limiting the number of spatial motion vector prediction candidates in the merge list smaller than or equal to the maximum number;

if the number of spatial motion vector prediction candidates in the merge list is smaller than the maximum number, examining whether a prediction unit to which the potential spatial motion vector prediction candidate belongs is available for motion prediction;

if so, performing at least one of the following:

if the potential spatial motion vector prediction candidate is located on the left side of the prediction unit, excluding the potential spatial motion vector prediction candidate from the merge list if any of the following conditions are fulfilled:

- the received block of pixels is vertically divided into a first prediction unit and a second prediction unit, and the prediction unit is the second prediction unit in coding order;

- the received block of pixels is horizontally divided into a first prediction unit and a second prediction unit, and if the prediction unit is the second prediction unit in coding order, and the potential spatial motion vector prediction candidate has the same motion vectors and the same reference indices than the spatial motion vector prediction candidate above the prediction unit;

if the potential spatial motion vector prediction candidate is located above the prediction unit, excluding the potential spatial motion vector prediction candidate from the merge list if any of the following conditions are fulfilled:

- the received block of pixels is horizontally divided into a first prediction unit and a second prediction unit, and the prediction unit is the second prediction unit in coding order;

- the potential spatial motion vector prediction candidate has the same motion vectors and the same reference indices than the spatial motion vector prediction candidate on the left side of the prediction unit;

if the potential spatial motion vector prediction candidate is located on the right side of the potential spatial motion vector prediction candidate above the prediction unit, excluding the potential spatial motion vector prediction candidate from the merge list if the potential spatial motion vector prediction candidate has the same motion vectors and the same reference indices than the spatial motion vector prediction candidate above the prediction unit;

if the potential spatial motion vector prediction candidate is located below the potential spatial motion vector prediction candidate on the left side of the prediction unit, excluding the potential spatial motion vector prediction candidate from the merge list if the potential spatial motion vector prediction candidate has the same motion vectors and the same reference indices than the spatial motion vector prediction candidate on the left side of the prediction unit;

if the potential spatial motion vector prediction candidate is cornerwise above-left neighbouring the prediction unit, excluding the potential spatial motion vector prediction candidate from the merge list if any of the following conditions are fulfilled:

- all the other potential spatial motion vector prediction candidates have been included in the merge list;

- the potential spatial motion vector prediction candidate has the same motion vectors and the same reference indices than the spatial motion vector prediction candidate above the prediction unit;

- the potential spatial motion vector prediction candidate has the same motion vectors and the same reference indices than the spatial motion vector prediction candidate on the left side of the prediction unit.

The subject matter of claims 5 and 6 are combined with claim 1 and, respectively, the subject matter of claims 12 and 13 are combined with claim 9 (now renumbered to claim 6). Claims 5, 6 and 12 and 13 are deleted.

The following claims have been renumbered accordingly.

Thus, all the features of the new claims are disclosed in the application as filed. Hence, the amended claims comply with the Art. 123(2) EPC.

Article 123(2) EPC

Sections 1.1, 1.2 and 1.3 of the Communication

The applicant respectfully submits that the Art. 123(2) rejection in the Communication refer to the claims 1 and 13 but the independent claim 1 does

not have the definitions referred in the Communication. It seems that the correct claims to be referred to are the dependent claims 6 and 13. In the currently amended claims the subject matter of claim 6 is combined with claim 1 and amended so that it defines "*if the potential spatial motion vector prediction candidate is cornerwise above-left neighbouring the prediction unit*", which refers to the spatial motion vector prediction candidate B2 and not to the other cornerwise neighbouring spatial motion vector prediction candidates A0 and B0. This is based on, for example, page 16, lines 1—4 and Fig. 9: "*…B2 is located on the same column than spatial motion vector prediction candidate A1 and on the same row than the spatial motion vector prediction candidate B1. In other words, the spatial motion vector prediction candidate B2 is cornerwise neighbouring the prediction unit as can be seen e.g. from Figure 9.*"

Thus, the amended claims 1 and 6 are supported by the application as filed and do not violate Art. 123(2) EPC.

Clarity (Art. 84 EPC)

Section 2.1 of the Communication

The previously presented amendments clarify the claim 1 to say "*…determining for the block of pixels a set of spatial motion vector prediction candidates for the block of pixels located below-left, left, above-left, above and above-right of the prediction unit; the spatial motion vector prediction candidates being provided with motion information;…*" It should now be clear with which neighbouring blocks the spatial motion vector predictor candidates are associated.

Section 2.2 of the Communication

Claim 1 is also amended to define *determining a subset of spatial motion vector prediction candidate pairs among existing spatial motion vector prediction candidate pairs for comparison among all available spatial motion vector prediction candidate pairs in the set of spatial motion vector prediction candidates*. It is now clear that only some of spatial motion vector candidate pairs are examined, not all of them. A skilled person would understand the purpose of this definition without undue burden. This is also supported by the application as filed, for example on page 18, lines 21—23: "*The examination in the second step does not include comparing motion information of each possible candidate pair but includes a subset of the possible comparison combinations*"

Section 2.3 of the Communication

Claims 1, 4, 6 and 8 are amended to define that the first/second prediction unit is the first/second prediction unit in coding/decoding order as is disclosed on page 18, lines 27—29.

Section 2.4 of the Communication

The deficiencies mentioned in Section 2.4 are cured by the combination of the pending claims 1, 5 and 6 and, respectively, by the combination of the pending claims 9, 12 and 13.

Section 2.5 of the Communication

The independent method claims are amended to include the definition *selecting one motion vector prediction candidate from the merge list to represent a motion vector prediction for the block of pixels* as is disclosed in the pending dependent claim 8.

Thus, the claims are clear according to Art. 84 EPC.

Novelty (Art. 54 EPC)

The amended independent claim 1 discloses *inter alia* some conditions how the merge list can be filled with prediction candidates until the merge list is full i.e. there are the determined maximum number or spatial motion vector prediction candidates in the merge list. Any of these conditions is not disclosed by D1.

Thus the amended claim 1 is novel in view of the D1 in accordance to Art. 54(1) EPC.

The same analogy applies to the independent claim 8 as well. Thus, the independent claims 1 and 8 are novel in sense of Art. 54(1) EPC.

Inventive step (Art. 56 EPC)

D1 is regarded as the closest prior art in the official communication.

As discussed in the previous novelty discussion, D1 fails to disclose the claimed conditions how the merge list can be filled with prediction candidates until the merge list is full.

The features of the amended claim 1 differing from D1, provide the technical effect of reducing the complexity of the implementation. This can be achieved by performing a limited number of motion information comparisons between candidate pairs to remove the redundant candidates rather than comparing every available candidate pair (application page 4, lines 11—14: "*In some*

embodiments video codecs employ in a motion prediction candidate list construction a way to reduce the complexity of the implementation. This can be achieved by performing a limited number of motion information comparisons between candidate pairs to remove the redundant candidates rather than comparing every available candidate pair.") Thus, starting from the D1, the technical problem to be solved is how to provide an improved construction of the merge list of prediction candidates.

The problem is solved by the method of claim 1, wherein duplicate spatial motion vector prediction candidates are avoided.

When looking at D1 and considering how to solve the objective technical problem, the skilled person would find a different solution.

When looking at D1 and considering how to solve the objective technical problem, the skilled person would not look at D2. As the applicant commented in the previous response, D2 (section 8.4.2.1.3 "Derivation process of reference indices for temporal merging candidate" of JCTVCE603_d8.doc) discloses how reference indices can be selected for the temporal motion vector prediction candidate. The approach is very similar to that of D1. First three candidates are selected based on their availability and that selection is followed by checks for all the combinations of the three. Further, D2 (section 8.4.2.1.4 "Derivation process for luma motion vector prediction") discloses also that "if several motion vectors have the same value, the motion vectors are removed from the list except the motion vector which has the smallest order in the mvpListLX" requiring full search of matching candidates within the candidate list.

D2 does not disclose the solution defined in the characterising portion of the currently amended independent claims. The solution of the independent claims is not obvious to a skilled person in view of the combination of D1 and D2.

Consequently, the independent claims 1 and 6 involve an inventive step over the cited prior art in sense of Art. 56 EPC.

Conclusion

In view of the amendments and submissions now made, the applicant respectfully submits that the application is now in order for allowance. If the Examiner is of the opinion that further objections should be raised, then a further written communication is requested. In the event that the Examiner considers any further objections cannot be dealt with in writing, then oral proceedings via videoconference (we intend to use IP technology) are requested in precaution under Art. 116(1) EPC.

We reserve the right to restore and/or file a divisional application for any subject matter which might otherwise be regarded as abandoned or effectively disclaimed by virtue of the amendments now made.

In case you want to discuss this matter, please do not hesitate to contact Timo Pursiainen, Tel. +358 10 227 2612.

Yours faithfully,
BERGGREN OY, TAMPERE

Timo Pursiainen

European Patent Attorney

Enclosures Amended set of claims (marked-up and clean versions)
Amended pages 4, 4a of the description (marked-up and clean versions)

Europäisches Patentamt
European Patent Office
Office européen des brevets

Letter accompanying subsequently filed items

Representative:
Berggren Oy, Tampere
477
Visiokatu 1
33720 Tampere
Finland

Phone: +358-10 227 2000
Fax: +358-10 227 2662
E-mail: email@berggren.fi

80298 Munich
Germany
Tel. +49(0)89 2399-0 | Fax -4465

P.O. Box 5818
2280 HV Rijswijk
Netherlands
Tel. +31(0)70 340-2040 | Fax -3016

10958 Berlin
Germany
Tel. +49(0)30 25901-0 | Fax -840

The document(s) listed below is (are) subsequently filed documents pertaining to the following application:

Application number	12845839.5
Applicant's or representative's reference	TP109764EP

	Description of document	Original file name	Assigned file name
1	Reply to examination report	OA 20190606 response TP109764EP.pdf	EXRE3-1.pdf
2	Amended claims (clean copy)	OA 20190606 amended claims TP109764EP (ID 4756111).pdf	CLMS-1.pdf
3	Amended claims with annotations	OA 20190606 amended claims M-U TP109764EP (ID 4755969).pdf	CLMS-HWA-1.pdf
4	Amended description (clean copy)	OA 20190606 amended page 4 TP109764EP (ID 4756069).pdf	DESC-1.pdf
5	Amended description with annotations	OA 20190606 amended page 4 M-U TP109764EP (ID 4756042).pdf	DESC-HWA-1.pdf

	Payment	
1	Method of payment	Not specified

Signatures

Place:	**Tampere**
Date:	**16 December 2019**
Signed by:	**Timo Pursiainen 36563**
Association:	**Berggren Oy, Tampere**
Representative name:	**Timo Pursiainen**
Capacity:	**(Representative)**

Amazon.com, Inc., Amazon.com Services LLC - Ex. 1017, Page 000332

identical motion vector prediction candidates may be removed to reduce redundancy. During the decoding, if the temporal motion vector prediction information is unavailable due to e.g. loss of reference frame, the decoder may not know if the temporal motion vector prediction candidate in the list is to be removed. This may lead to uncertainty for mapping the decoded candidate index to the candidates whose removal decision is based on comparing motion information with the temporal motion vector prediction. As a result, false assignment of motion vector prediction candidates may occur which may lead to degradation in the picture quality and drift of false motion information throughout the decoding process.

The document Nakamura "Unification of derivation process for merge mode and MVP" describes a system that selects the first two available spatial predictors and performs a duplicate removal process between the two spatial predictor candidates (S0 and S1) and one temporal predictor candidate (Col). The duplicate removal process is not considering the locations of the spatial candidates and all three possible combinations of S0, S1 and Col are performed "blindly" as follows: S0 is compared with S1, S0 is compared with Col, and S1 is compared with Col. It may happen that one or both of the selected two spatial predictors are not the best alternatives.

The document Wiegand et al. "WD3 Working draft 3 of high efficiency video coding" disqualifies candidates if unavailable, if coded with intra mode, or if the motion of a candidate is identical to motion of another prediction unit within the same coding unit. Thus, it would have been more efficient to represent a coding unit with a larger segmentation instead of splitting it into smaller prediction units and indicating identical motion between those small prediction units.

The document Zheng et al "Merge candidate selection in 2NxN, Nx2N, and NxN mode" proposes to allow additional merge candidates to survive the process described in Wiegand et al, section 8.4.2.1.2, based on the index of the merge candidate.

SUMMARY

The present invention introduces a method for generating a motion vector prediction list for an image block. In some embodiments video codecs employ in a motion prediction candidate list construction a way to reduce the complexity of the implementation. This can be achieved by performing a limited number of motion information comparisons between candidate pairs to remove the redundant candidates rather than comparing every available candidate pair. The decision of whether comparing two candidates may depend on the order of the candidates to be considered for the list and/or coding/prediction mode and/or location of the blocks associated with the candidates. In some embodiments a video codec employs a merge process for motion information coding and creates a list of motion prediction candidates from which one of the candidates is to be signalled as the motion information for the current coding or prediction unit. The motion prediction candidates may consist of

Amazon.com, Inc., Amazon.com Services LLC - Ex. 1017, Page 000333

several spatial motion predictions and a temporal motion prediction. The spatial candidates are obtained from the motion information of e.g. spatial neighbour blocks.

According to a first aspect of the present invention there is provided a method comprising:

receiving a block of pixels including a prediction unit; determining a set of spatial motion vector prediction candidates for the block of pixels; the spatial motion vector prediction candidates being provided with motion information;

selecting a first spatial motion vector prediction candidate from the set of spatial motion vector prediction candidates as a potential spatial motion vector prediction candidate to be included in a merge list for the prediction unit;

determining a subset of spatial motion vector predictions based on the location of the block associated with the first spatial motion vector prediction candidate;

comparing motion information of the first spatial motion vector prediction candidate with motion information of the spatial motion vector prediction candidate in the determined subset of spatial motion vector prediction candidates;

if at least one of the comparisons indicates that the motion vector information of the spatial motion vector prediction candidates correspond with each other, excluding the first spatial motion vector prediction candidate from the merge list.

According to a second aspect of the present invention there is provided a method comprising:

receiving an encoded block of pixels including a prediction unit;

Amazon.com, Inc., Amazon.com Services LLC - Ex. 1017, Page 000334

Claims:

1. A method comprising:

receiving a block (900) of pixels including a prediction unit;

determining for the block (900) of pixels a set of spatial motion vector prediction candidates located below-left (901), left (902), above-left (905), above (904) and above-right (903) of the prediction unit; the spatial motion vector prediction candidates being provided with motion information comprising at least a motion vector and a reference index;

determining a subset of spatial motion vector prediction candidate pairs among existing spatial motion vector prediction candidate pairs for comparison among all available spatial motion vector prediction candidate pairs in the set of spatial motion vector prediction candidates;

selecting a spatial motion vector prediction candidate from the set of spatial motion vector prediction candidates as a potential spatial motion vector prediction candidate to be included in a merge list for the prediction unit;

examining the subset of spatial motion vector prediction candidate pairs to determine which other spatial motion vector prediction candidate is defined to belong to the same spatial motion vector prediction candidate pair than the selected spatial motion vector prediction candidate (610);

comparing motion information of the selected spatial motion vector prediction candidate with motion information of the other spatial motion vector prediction candidate;

if the comparison indicates that the motion vector information of the other spatial motion vector prediction candidate corresponds with the motion vector information of the selected spatial motion vector prediction candidate, excluding the selected spatial motion vector prediction candidate from the merge list;

wherein the method further comprises selecting one motion vector prediction candidate from the merge list to represent a motion vector prediction for the block of pixels;

characterised in that the method further comprises:

determining a maximum number of spatial motion vector prediction candidates to be included in a merge list;

limiting the number of spatial motion vector prediction candidates in the merge list smaller than or equal to the maximum number;

if the number of spatial motion vector prediction candidates in the merge list is smaller than the maximum number, examining whether a prediction unit to which the potential spatial motion vector prediction candidate belongs is available for motion prediction;

if so, performing at least one of the following:

if the potential spatial motion vector prediction candidate (902) is located on the left side of the prediction unit, excluding the potential spatial motion vector prediction candidate (902) from the merge list if any of the following conditions are fulfilled:

Amazon.com, Inc., Amazon.com Services LLC - Ex. 1017, Page 000335

– the received block of pixels is vertically divided into a first prediction unit and a second prediction unit, and the prediction unit is the second prediction unit in coding order;

– the received block of pixels is horizontally divided into a first prediction unit and a second prediction unit, and if the prediction unit is the second prediction unit in coding order, and the potential spatial motion vector prediction candidate (902) has the same motion vectors and the same reference indices than the spatial motion vector prediction candidate (904) above the prediction unit;

if the potential spatial motion vector prediction candidate (904) is located above the prediction unit, excluding the potential spatial motion vector prediction candidate (904) from the merge list if any of the following conditions are fulfilled:

– the received block of pixels is horizontally divided into a first prediction unit and a second prediction unit, and the prediction unit is the second prediction unit in coding order;

– the potential spatial motion vector prediction candidate (904) has the same motion vectors and the same reference indices than the spatial motion vector prediction candidate (902) on the left side of the prediction unit;

if the potential spatial motion vector prediction candidate (903) is located on the right side of the potential spatial motion vector prediction candidate (904) above the prediction unit, excluding the potential spatial motion vector prediction candidate (903) from the merge list if the potential spatial motion vector prediction candidate (903) has the same motion vectors and the same reference indices than the spatial motion vector prediction candidate (904) above the prediction unit;

if the potential spatial motion vector prediction candidate (901) is located below the potential spatial motion vector prediction candidate (902) on the left side of the prediction unit, excluding the potential spatial motion vector prediction candidate (901) from the merge list if the potential spatial motion vector prediction candidate (901) has the same motion vectors and the same reference indices than the spatial motion vector prediction candidate (902) on the left side of the prediction unit;

if the potential spatial motion vector prediction candidate (905) is cornerwise above-left neighbouring the prediction unit, excluding the potential spatial motion vector prediction candidate (905) from the merge list if any of the following conditions are fulfilled:

– all the other potential spatial motion vector prediction candidates (901—904) have been included in the merge list;

– the potential spatial motion vector prediction candidate (905) has the same motion vectors and the same reference indices than the spatial motion vector prediction candidate (904) above the prediction unit;

Amazon.com, Inc., Amazon.com Services LLC - Ex. 1017, Page 000336

– the potential spatial motion vector prediction candidate (905) has the same motion vectors and the same reference indices than the spatial motion vector prediction candidate (902) on the left side of the prediction unit.

2. The method according to claim 1 comprising selecting spatial motion vector prediction candidates from the set of spatial motion vector prediction candidates as the potential spatial motion vector prediction candidate in a predetermined order.

3. The method according to claim 1 or 2, comprising comparing motion information of the potential spatial motion vector prediction candidate with motion information of at most one other spatial motion vector prediction candidate of the set of spatial motion vector prediction candidates.

4. The method according to any of the claims 1 to 3 comprising examining whether the received block of pixels is divided into a first prediction unit and a second prediction unit in coding order; and if so, excluding the potential spatial motion vector prediction candidate from the merge list if the prediction unit is the second prediction unit.

5. The method according to any of the claims 1 to 4 further comprising including a temporal motion prediction candidate into the merge list.

6. A method comprising:

receiving an encoded block of pixels including a prediction unit;

determining for the encoded block (900) of pixels a set of spatial motion vector prediction candidates located below-left (901), left (902), above-left (905), above (904) and above-right (903) of the prediction unit; the spatial motion vector prediction candidates being provided with motion information comprising at least a motion vector and a reference index;

determining a subset of spatial motion vector prediction candidate pairs among existing spatial motion vector prediction candidate pairs for comparison among all available spatial motion vector prediction candidate pairs in the set of spatial motion vector prediction candidates;

selecting a spatial motion vector prediction candidate from the set of spatial motion vector prediction candidates as a potential spatial motion vector prediction candidate to be included in a merge list for the prediction unit;

examining the subset of spatial motion vector prediction candidate pairs to determine which other spatial motion vector prediction candidate is defined to belong to the same spatial motion vector prediction candidate pair than the selected spatial motion vector prediction candidate;

comparing motion information of the selected spatial motion vector prediction candidate with motion information of the other spatial motion vector prediction candidate;

Amazon.com, Inc., Amazon.com Services LLC - Ex. 1017, Page 000337

if the comparison indicates that the motion vector information of the other spatial motion vector prediction candidate corresponds with the motion vector information of the selected spatial motion vector prediction candidate, excluding the selected spatial motion vector prediction candidate from the merge list

wherein the method further comprises selecting one motion vector prediction candidate from the merge list to represent a motion vector prediction for the block of pixels;

characterised in that the method further comprises:

determining a maximum number of spatial motion vector prediction candidates to be included in a merge list;

limiting the number of spatial motion vector prediction candidates in the merge list smaller or equal to the maximum number;

if the number of spatial motion vector prediction candidates in the merge list smaller than the maximum number, examining whether a prediction unit to which the potential spatial motion vector prediction candidate belongs is available for motion prediction;

if so, performing at least one of the following:

if the potential spatial motion vector prediction candidate (902) is located on the left side of the prediction unit, excluding the potential spatial motion vector prediction candidate (902) from the merge list if any of the following conditions are fulfilled:

– the received encoded block of pixels is vertically divided into a first prediction unit and a second prediction unit, and the prediction unit is the second prediction unit;

– the received encoded block of pixels is horizontally divided into a first prediction unit and a second prediction unit, and if the prediction unit is the second prediction unit, and the potential spatial motion vector prediction candidate (902) has the same motion vectors and the same reference indices than the spatial motion vector prediction candidate (904) above the prediction unit;

if the potential spatial motion vector prediction candidate (904) is located above the prediction unit, excluding the potential spatial motion vector prediction candidate (904) from the merge list if any of the following conditions are fulfilled:

– the received encoded block of pixels is horizontally divided into a first prediction unit and a second prediction unit, and the prediction unit is the second prediction unit in decoding order;

– the potential spatial motion vector prediction candidate (904) has the same motion vectors and the same reference indices than the spatial motion vector prediction candidate (902) on the left side of the prediction unit;

if the potential spatial motion vector prediction candidate (903) is located on the right side of the potential spatial motion vector prediction candidate (904) above the prediction unit,

Amazon.com, Inc., Amazon.com Services LLC - Ex. 1017, Page 000338

excluding the potential spatial motion vector prediction candidate (903) from the merge list if the potential spatial motion vector prediction candidate has the same motion vectors and the same reference indices than the spatial motion vector prediction candidate (904) above the prediction unit;

if the potential spatial motion vector prediction candidate (901) is located below the potential spatial motion vector prediction candidate (902) on the left side of the prediction unit, excluding the potential spatial motion vector prediction candidate (901) from the merge list if the potential spatial motion vector prediction candidate (901) has the same motion vectors and the same reference indices than the spatial motion vector prediction candidate (902) on the left side of the prediction unit;

if the potential spatial motion vector prediction candidate (905) is cornerwise above-left neighbouring the prediction unit, excluding the potential spatial motion vector prediction candidate (905) from the merge list if any of the following conditions are fulfilled:

- all the other potential spatial motion vector prediction candidates (901—904) have been included in the merge list;
- the potential spatial motion vector prediction candidate (905) has the same motion vectors and the same reference indices than the spatial motion vector prediction candidate (904) above the prediction unit;
- the potential spatial motion vector prediction candidate (905) has the same motion vectors and the same reference indices than the spatial motion vector prediction candidate (902) on the left side of the prediction unit.

7. The method according to claim 6 comprising comparing motion information of the potential spatial motion vector prediction candidate with motion information of at most one other spatial motion vector prediction candidate of the set of spatial motion vector prediction candidates.

8. The method according to claim 6 or 7 comprising examining whether the received encoded block of pixels is divided into a first prediction unit and a second prediction unit in decoding order; and if so, excluding the potential spatial motion vector prediction candidate from the merge list if the prediction unit is the second prediction unit.

9. The method according to any of the claims 6 to 8 comprising selecting one motion vector prediction candidate from the merge list to represent a motion vector prediction for the received encoded block of pixels.

10. An apparatus comprising means for performing a method according to any one of claims 1 to 5.

Amazon.com, Inc., Amazon.com Services LLC - Ex. 1017, Page 000339

11. An apparatus comprising means for performing a method according to any one of claims 6 to 9.

12. A computer-readable media having computer-readable instructions thereon which, when executed by one or more processors, cause one or more processors to perform a method of any one of claims 1 to 5.

13. A computer-readable media having computer-readable instructions thereon which, when executed by one or more processors, cause one or more processors to perform a method of any one of claims 6 to 9.

Amazon.com, Inc., Amazon.com Services LLC - Ex. 1017, Page 000340

identical motion vector prediction candidates may be removed to reduce redundancy. During the decoding, if the temporal motion vector prediction information is unavailable due to e.g. loss of reference frame, the decoder may not know if the temporal motion vector prediction candidate in the list is to be removed. This may lead to uncertainty for mapping the decoded candidate index to the candidates whose removal decision is based on comparing motion information with the temporal motion vector prediction. As a result, false assignment of motion vector prediction candidates may occur which may lead to degradation in the picture quality and drift of false motion information throughout the decoding process.

The document Nakamura "Unification of derivation process for merge mode and MVP" describes a system that selects the first two available spatial predictors and performs a duplicate removal process between the two spatial predictor candidates (S0 and S1) and one temporal predictor candidate (Col). The duplicate removal process is not considering the locations of the spatial candidates and all three possible combinations of S0, S1 and Col are performed "blindly" as follows: S0 is compared with S1, S0 is compared with Col, and S1 is compared with Col. It may happen that one or both of the selected two spatial predictors are not the best alternatives.

The document Wiegand et al. "WD3 Working draft 3 of high efficiency video coding" disqualifies candidates if unavailable, if coded with intra mode, or if the motion of a candidate is identical to motion of another prediction unit within the same coding unit. Thus, it would have been more efficient to represent a coding unit with a larger segmentation instead of splitting it into smaller prediction units and indicating identical motion between those small prediction units.

The document Zheng et al "Merge candidate selection in 2NxN, Nx2N, and NxN mode" proposes to allow additional merge candidates to survive the process described in Wiegand et al, section 8.4.2.1.2, based on the index of the merge candidate.

SUMMARY

The present invention introduces a method for generating a motion vector prediction list for an image block. In some embodiments video codecs employ in a motion prediction candidate list construction a way to reduce the complexity of the implementation. This can be achieved by performing a limited number of motion information comparisons between candidate pairs to remove the redundant candidates rather than comparing every available candidate pair. The decision of whether comparing two candidates may depend on the order of the candidates to be considered for the list and/or coding/prediction mode and/or location of the blocks associated with the candidates. In some embodiments a video codec employs a merge process for motion information coding and creates a list of motion prediction candidates from which one of the candidates is to be signalled as the motion information for the current coding or prediction unit. The motion prediction candidates may consist of

Amazon.com, Inc., Amazon.com Services LLC - Ex. 1017, Page 000341

several spatial motion predictions and a temporal motion prediction. The spatial candidates are obtained from the motion information of e.g. spatial neighbour blocks.

According to a first aspect of the present invention there is provided a method comprising:

receiving a block of pixels including a prediction unit; determining a set of spatial motion vector prediction candidates for the block of pixels; the spatial motion vector prediction candidates being provided with motion information;

selecting a first spatial motion vector prediction candidate from the set of spatial motion vector prediction candidates as a potential spatial motion vector prediction candidate to be included in a merge list for the prediction unit;

determining a subset of spatial motion vector predictions based on the location of the block associated with the first spatial motion vector prediction candidate;

comparing motion information of the first spatial motion vector prediction candidate with motion information of the spatial motion vector prediction candidate in the determined subset of spatial motion vector prediction candidates;

if at least one of the comparisons indicates that the motion vector information of the spatial motion vector prediction candidates correspond with each other, excluding the first spatial motion vector prediction candidate from the merge list.

According to a second aspect of the present invention there is provided a method comprising:

receiving an encoded block of pixels including a prediction unit;

Amazon.com, Inc., Amazon.com Services LLC - Ex. 1017, Page 000342

Claims:

1. A method comprising:

receiving a block (900) of pixels including a prediction unit;

determining for the block (900) of pixels a set of spatial motion vector prediction candidates ~~for the block of pixels~~ located below-left (901), left (902), above-left (905), above (904) and above-right (903) of the prediction unit; the spatial motion vector prediction candidates being provided with motion information comprising at least a motion vector and a reference index;

determining a ~~limited number~~subset of spatial motion vector prediction candidate pairs among existing spatial motion vector prediction candidate pairs for comparison among all available spatial motion vector prediction candidate pairs in the set of spatial motion vector prediction candidates;

selecting a spatial motion vector prediction candidate from the set of spatial motion vector prediction candidates as a potential spatial motion vector prediction candidate to be included in a merge list for the prediction unit;

examining the ~~limited number~~subset of spatial motion vector prediction candidate pairs to determine which other spatial motion vector prediction candidate is defined to belong to the same spatial motion vector prediction candidate pair than the selected spatial motion vector prediction candidate (610);

comparing motion information of the selected spatial motion vector prediction candidate with motion information of the other spatial motion vector prediction candidate;

if the comparison indicates that the motion vector information of the other spatial motion vector prediction candidate corresponds with the motion vector information of the selected spatial motion vector prediction candidate, excluding the selected spatial motion vector prediction candidate from the merge list;

wherein the method further comprises selecting one motion vector prediction candidate from the merge list to represent a motion vector prediction for the block of pixels;

characterised in that the method further comprises:

determining a maximum number of spatial motion vector prediction candidates to be included in a merge list;

limiting the number of spatial motion vector prediction candidates in the merge list smaller than or equal to the maximum number;

if the number of spatial motion vector prediction candidates in the merge list is smaller than the maximum number, examining whether a prediction unit to which the potential spatial motion vector prediction candidate belongs is available for motion prediction;

if so, performing at least one of the following:

if the potential spatial motion vector prediction candidate (902) is located on the left side of the prediction unit, excluding the potential spatial motion vector prediction candidate (902) from the merge list if any of the following conditions are fulfilled:

Amazon.com, Inc., Amazon.com Services LLC - Ex. 1017, Page 000343

– the received block of pixels is vertically divided into a first prediction unit and a second prediction unit, and the prediction unit is the second prediction unit in coding order;

– the received block of pixels is horizontally divided into a first prediction unit and a second prediction unit, and if the prediction unit is the second prediction unit in coding order, and the potential spatial motion vector prediction candidate (902) has the same motion vectors and the same reference indices than the spatial motion vector prediction candidate (904) above the prediction unit;

if the potential spatial motion vector prediction candidate (904) is located above the prediction unit, excluding the potential spatial motion vector prediction candidate (904) from the merge list if any of the following conditions are fulfilled:

– the received block of pixels is horizontally divided into a first prediction unit and a second prediction unit, and the prediction unit is the second prediction unit in coding order;

– the potential spatial motion vector prediction candidate (904) has the same motion vectors and the same reference indices than the spatial motion vector prediction candidate (902) on the left side of the prediction unit;

if the potential spatial motion vector prediction candidate (903) is located on the right side of the potential spatial motion vector prediction candidate (904) above the prediction unit, excluding the potential spatial motion vector prediction candidate (903) from the merge list if the potential spatial motion vector prediction candidate (903) has the same motion vectors and the same reference indices than the spatial motion vector prediction candidate (904) above the prediction unit;

if the potential spatial motion vector prediction candidate (901) is located below the potential spatial motion vector prediction candidate (902) on the left side of the prediction unit, excluding the potential spatial motion vector prediction candidate (901) from the merge list if the potential spatial motion vector prediction candidate (901) has the same motion vectors and the same reference indices than the spatial motion vector prediction candidate (902) on the left side of the prediction unit;

if the potential spatial motion vector prediction candidate (905) is cornerwise above-left neighbouring the prediction unit, excluding the potential spatial motion vector prediction candidate (905) from the merge list if any of the following conditions are fulfilled:

– all the other potential spatial motion vector prediction candidates (901—904) have been included in the merge list;

– the potential spatial motion vector prediction candidate (905) has the same motion vectors and the same reference indices than the spatial motion vector prediction candidate (904) above the prediction unit;

Amazon.com, Inc., Amazon.com Services LLC - Ex. 1017, Page 000344

– the potential spatial motion vector prediction candidate (905) has the same motion vectors and the same reference indices than the spatial motion vector prediction candidate (902) on the left side of the prediction unit.

2. The method according to claim 1 comprising selecting spatial motion vector prediction candidates from the set of spatial motion vector prediction candidates as the potential spatial motion vector prediction candidate in a predetermined order.

3. The method according to claim 1 or 2, comprising comparing motion information of the potential spatial motion vector prediction candidate with motion information of at most one other spatial motion vector prediction candidate of the set of spatial motion vector prediction candidates.

4. The method according to any of the claims 1 to 3 comprising examining whether the received block of pixels is divided into a first prediction unit and a second prediction unit in coding order; and if so, excluding the potential spatial motion vector prediction candidate from the merge list if the prediction unit is the second prediction unit.

~~5. The method according to any of the claims 1 to 4, further comprising determining a maximum number of spatial motion vector prediction candidates to be included in a merge list; and limiting the number of spatial motion vector prediction candidates in the merge list smaller or equal to the maximum number .~~

~~6. The method according to any of the claims 1 to 5, wherein the motion information comprises at least a motion vector and a reference index, and the set of spatial motion vector prediction candidates comprises at least one of:~~

~~one or more neighbouring blocks to the left of the prediction unit;~~

~~one or more neighbouring blocks above the prediction unit;~~

~~one or more cornerwise neighbouring blocks of the prediction unit,~~

~~the method further comprising:~~

~~examining, if the number of spatial motion vector prediction candidates in the merge list is smaller than the maximum number;~~

~~if so, examining whether a prediction unit to which the potential spatial motion vector prediction candidate belongs is available for motion prediction;~~

~~if so, performing at least one of the following:~~

~~if the potential spatial motion vector prediction candidate is located on the left side of the prediction unit, excluding the potential spatial motion vector prediction candidate from the merge list if any of the following conditions are fulfilled:~~

Amazon.com, Inc., Amazon.com Services LLC - Ex. 1017, Page 000345

~~the received block of pixels is vertically divided into a first prediction unit and a second prediction unit, and the prediction unit is the second prediction unit;~~

~~the received block of pixels is horizontally divided into a first prediction unit and a second prediction unit, and if the prediction unit is the second prediction unit, and the potential spatial motion vector prediction candidate has the same motion vectors and the same reference indices than the spatial motion vector prediction candidate above the prediction unit;~~

~~if the potential spatial motion vector prediction candidate is located above the prediction unit, excluding the potential spatial motion vector prediction candidate from the merge list if any of the following conditions are fulfilled:~~

~~the received block of pixels is horizontally divided into a first prediction unit and a second prediction unit, and the prediction unit is the second prediction unit;~~

~~the potential spatial motion vector prediction candidate has the same motion vectors and the same reference indices than the spatial motion vector prediction candidate on the left side of the prediction unit;~~

~~if the potential spatial motion vector prediction candidate is located on the right side of the potential spatial motion vector prediction candidate above the prediction unit, excluding the potential spatial motion vector prediction candidate from the merge list if the potential spatial motion vector prediction candidate has the same motion vectors and the same reference indices than the spatial motion vector prediction candidate above the prediction unit;~~

~~if the potential spatial motion vector prediction candidate is located below the potential spatial motion vector prediction candidate on the left side of the prediction unit, excluding the potential spatial motion vector prediction candidate from the merge list if the potential spatial motion vector prediction candidate has the same motion vectors and the same reference indices than the spatial motion vector prediction candidate on the left side of the prediction unit;~~

~~if the potential spatial motion vector prediction candidate is cornerwise neighbouring the prediction unit, excluding the potential spatial motion vector prediction candidate from the merge list if any of the following conditions are fulfilled:~~

~~all the other potential spatial motion vector prediction candidates have been included in the merge list;~~

~~the potential spatial motion vector prediction candidate has the same motion vectors and the same reference indices than the spatial motion vector prediction candidate above the prediction unit;~~

~~the potential spatial motion vector prediction candidate has the same motion vectors and the same reference indices than the spatial motion vector prediction candidate on the left side of the prediction unit.~~

Amazon.com, Inc., Amazon.com Services LLC - Ex. 1017, Page 000346

5~~7~~. The method according to any of the claims 1 to 4~~6~~ further comprising including a temporal motion prediction candidate into the merge list.

~~8. The method according to any of the claims 1 to 7 comprising selecting one motion vector prediction candidate from the merge list to represent a motion vector prediction for the block of pixels.~~

6~~9~~. A method comprising:

receiving an encoded block of pixels including a prediction unit;

determining for the encoded block (900) of pixels a set of spatial motion vector prediction candidates located below-left (901), left (902), above-left (905), above (904) and above-right (903) of the prediction unit ~~for the encoded block of pixels~~; the spatial motion vector prediction candidates being provided with motion information comprising at least a motion vector and a reference index;

determining a ~~limited number~~ subset of spatial motion vector prediction candidate pairs among existing spatial motion vector prediction candidate pairs for comparison among all available spatial motion vector prediction candidate pairs in the set of spatial motion vector prediction candidates;

selecting a spatial motion vector prediction candidate from the set of spatial motion vector prediction candidates as a potential spatial motion vector prediction candidate to be included in a merge list for the prediction unit;

examining the ~~limited number~~subset of spatial motion vector prediction candidate pairs to determine which other spatial motion vector prediction candidate is defined to belong to the same spatial motion vector prediction candidate pair than the selected spatial motion vector prediction candidate;

comparing motion information of the selected spatial motion vector prediction candidate with motion information of the other spatial motion vector prediction candidate;

if the comparison~~s~~ indicates that the motion vector information of the other spatial motion vector prediction candidate corresponds with the motion vector information of the selected spatial motion vector prediction candidate, excluding the selected spatial motion vector prediction candidate from the merge list

wherein the method further comprises selecting one motion vector prediction candidate from the merge list to represent a motion vector prediction for the block of pixels;

characterised in that the method further comprises:

determining a maximum number of spatial motion vector prediction candidates to be included in a merge list;

limiting the number of spatial motion vector prediction candidates in the merge list smaller or equal to the maximum number;

if the number of spatial motion vector prediction candidates in the merge list smaller than the maximum number, examining whether a prediction unit to which the potential spatial motion vector prediction candidate belongs is available for motion prediction;

Amazon.com, Inc., Amazon.com Services LLC - Ex. 1017, Page 000347

if so, performing at least one of the following:

if the potential spatial motion vector prediction candidate (902) is located on the left side of the prediction unit, excluding the potential spatial motion vector prediction candidate (902) from the merge list if any of the following conditions are fulfilled:

– the received encoded block of pixels is vertically divided into a first prediction unit and a second prediction unit, and the prediction unit is the second prediction unit;

– the received encoded block of pixels is horizontally divided into a first prediction unit and a second prediction unit, and if the prediction unit is the second prediction unit, and the potential spatial motion vector prediction candidate (902) has the same motion vectors and the same reference indices than the spatial motion vector prediction candidate (904) above the prediction unit;

if the potential spatial motion vector prediction candidate (904) is located above the prediction unit, excluding the potential spatial motion vector prediction candidate (904) from the merge list if any of the following conditions are fulfilled:

– the received encoded block of pixels is horizontally divided into a first prediction unit and a second prediction unit, and the prediction unit is the second prediction unit in decoding order;

– the potential spatial motion vector prediction candidate (904) has the same motion vectors and the same reference indices than the spatial motion vector prediction candidate (902) on the left side of the prediction unit;

if the potential spatial motion vector prediction candidate (903) is located on the right side of the potential spatial motion vector prediction candidate (904) above the prediction unit, excluding the potential spatial motion vector prediction candidate (903) from the merge list if the potential spatial motion vector prediction candidate has the same motion vectors and the same reference indices than the spatial motion vector prediction candidate (904) above the prediction unit;

if the potential spatial motion vector prediction candidate (901) is located below the potential spatial motion vector prediction candidate (902) on the left side of the prediction unit, excluding the potential spatial motion vector prediction candidate (901) from the merge list if the potential spatial motion vector prediction candidate (901) has the same motion vectors and the same reference indices than the spatial motion vector prediction candidate (902) on the left side of the prediction unit;

if the potential spatial motion vector prediction candidate (905) is cornerwise above-left neighbouring the prediction unit, excluding the potential spatial motion vector prediction candidate (905) from the merge list if any of the following conditions are fulfilled:

Amazon.com, Inc., Amazon.com Services LLC - Ex. 1017, Page 000348

– all the other potential spatial motion vector prediction candidates (901—904) have been included in the merge list;
– the potential spatial motion vector prediction candidate (905) has the same motion vectors and the same reference indices than the spatial motion vector prediction candidate (904) above the prediction unit;
– the potential spatial motion vector prediction candidate (905) has the same motion vectors and the same reference indices than the spatial motion vector prediction candidate (902) on the left side of the prediction unit.

7~~10~~. The method according to claim 6~~9~~ comprising comparing motion information of the potential spatial motion vector prediction candidate with motion information of at most one other spatial motion vector prediction candidate of the set of spatial motion vector prediction candidates.

8~~11~~. The method according to claim 6~~9~~ or 7~~10~~ comprising examining whether the received encoded block of pixels is divided into a first prediction unit and a second prediction unit in decoding order; and if so, excluding the potential spatial motion vector prediction candidate from the merge list if the prediction unit is the second prediction unit.

~~12. The method according to any of the claims 9 to 11, further comprising~~
~~determining a maximum number of spatial motion vector prediction candidates to be included in a merge list; and~~
~~limiting the number of spatial motion vector prediction candidates in the merge list smaller or equal to the maximum number.~~

~~13. The method according to any of the claims 9 to 12, wherein the motion information comprises at least a motion vector and a reference index, and the set of spatial motion vector prediction candidates comprises at least one of:~~
~~one or more neighbouring blocks to the left of the prediction unit;~~
~~one or more neighbouring blocks above the prediction unit;~~
~~one or more cornerwise neighbouring blocks of the prediction unit,~~
~~the method further comprising:~~
~~examining, if the number of spatial motion vector prediction candidates in the merge list smaller than the maximum number;~~
~~if so, examining whether a prediction unit to which the potential spatial motion vector prediction candidate belongs is available for motion prediction;~~
~~if so, performing at least one of the following:~~

Amazon.com, Inc., Amazon.com Services LLC - Ex. 1017, Page 000349

~~if the potential spatial motion vector prediction candidate is located on the left side of the prediction unit, excluding the potential spatial motion vector prediction candidate from the merge list if any of the following conditions are fulfilled:~~

~~the received encoded block of pixels is vertically divided into a first prediction unit and a second prediction unit, and the prediction unit is the second prediction unit;~~

~~the received encoded block of pixels is horizontally divided into a first prediction unit and a second prediction unit, and if the prediction unit is the second prediction unit, and the potential spatial motion vector prediction candidate has the same motion vectors and the same reference indices than the spatial motion vector prediction candidate above the prediction unit;~~

~~if the potential spatial motion vector prediction candidate is located above the prediction unit, excluding the potential spatial motion vector prediction candidate from the merge list if any of the following conditions are fulfilled:~~

~~the received encoded block of pixels is horizontally divided into a first prediction unit and a second prediction unit, and the prediction unit is the second prediction unit;~~

~~the potential spatial motion vector prediction candidate has the same motion vectors and the same reference indices than the spatial motion vector prediction candidate on the left side of the prediction unit;~~

~~if the potential spatial motion vector prediction candidate, which is located on the right side of the potential spatial motion vector prediction candidate above the prediction unit, excluding the potential spatial motion vector prediction candidate from the merge list if the potential spatial motion vector prediction candidate has the same motion vectors and the same reference indices than the spatial motion vector prediction candidate above the prediction unit;~~

~~if the potential spatial motion vector prediction candidate, which is located below the potential spatial motion vector prediction candidate on the left side of the prediction unit, excluding the potential spatial motion vector prediction candidate from the merge list if the potential spatial motion vector prediction candidate has the same motion vectors and the same reference indices than the spatial motion vector prediction candidate on the left side of the prediction unit;~~

~~if the potential spatial motion vector prediction candidate is cornerwise neighbouring the prediction unit, excluding the potential spatial motion vector prediction candidate from the merge list if any of the following conditions are fulfilled:~~

~~all the other potential spatial motion vector prediction candidates have been included in the merge list;~~

~~the potential spatial motion vector prediction candidate has the same motion vectors and the same reference indices than the spatial motion vector prediction candidate above the prediction unit;~~

Amazon.com, Inc., Amazon.com Services LLC - Ex. 1017, Page 000350

~~the potential spatial motion vector prediction candidate has the same motion vectors and the same reference indices than the spatial motion vector prediction candidate on the left side of the prediction unit.~~

9~~14~~. The method according to any of the claims 6~~9~~ to 8~~13~~ comprising selecting one motion vector prediction candidate from the merge list to represent a motion vector prediction for the received encoded block of pixels.

10~~15~~. An apparatus comprising means for performing a method according to any one of claims 1 to 5~~8~~.

11~~16~~. An apparatus comprising means for performing a method according to any one of claims 6~~9~~ to 9~~14~~.

12~~17~~. A computer-readable media having computer-readable instructions thereon which, when executed by one or more processors, cause one or more processors to perform a method of any one of claims 1 to 5~~8~~.

13~~18~~. A computer-readable media having computer-readable instructions thereon which, when executed by one or more processors, cause one or more processors to perform a method of any one of claims 6~~9~~ to 9~~14~~.

Amazon.com, Inc., Amazon.com Services LLC - Ex. 1017, Page 000351

Europäisches Patentamt
European Patent Office
Office européen des brevets

Acknowledgement of receipt

We hereby acknowledge receipt of the following subsequently filed document(s):

Submission number	8156711
Application number	EP12845839.5
Date of receipt	16 December 2019
Receiving Office	European Patent Office, The Hague
Your reference	TP109764EP
Applicant	All applicants as on file

Documents submitted

package-data.xml	ep-sfd-request.xml
epf1038.pdf (1 p.)	EXRE3-1.pdf\OA 20190606 response TP109764EP.pdf (7 p.)
CLMS-1.pdf\OA 20190606 amended claims TP109764EP (ID 4756111).pdf (6 p.)	CLMS-HWA-1.pdf\OA 20190606 amended claims M-U TP109764EP (ID 4755969).pdf (9 p.)
DESC-1.pdf\OA 20190606 amended page 4 TP109764EP (ID 4756069).pdf (2 p.)	DESC-HWA-1.pdf\OA 20190606 amended page 4 M-U TP109764EP (ID 4756042).pdf (2 p.)

Submitted by	CN=Timo Pursiainen 36563
Method of submission	Online
Date and time receipt generated	16 December 2019, 13:46 (CET)
Message Digest	5C:B9:F0:0F:40:01:64:BD:CE:C1:89:53:F2:1B:D2:F4:3C:47:AB:20

Correction by the EPO of errors in debit instructions filed by eOLF
Errors in debit instructions filed by eOLF that are caused by the editing of Form 1038E entries or the continued use of outdated software (all forms) may be corrected automatically by the EPO, leaving the payment date unchanged (see decision T 152/82,

Amazon.com, Inc., Amazon.com Services LLC - Ex. 1017, Page 000352

OJ EPO 1984, 301 and point 6.3 ff ADA, Supplement to OJ EPO 10/2007).

/European Patent Office/

Amazon.com, Inc., Amazon.com Services LLC - Ex. 1017, Page 000353

NOKIA

27 January 2020

European Patent Office
Ms. Monica Gazzoli
Client Data Registration
Dir. 1.3.4.2
European Patent Office
80298 Munich

EPO - Munich
100
28. Jan. 2020

ZPL

Registration of Debit Account for Refunds

Nokia

Nokia Solutions and Networks GmbH & Co. KG

Office Address:

Lorenzstrasse 10

70435 Stuttgart

Germany

Sitz der Gesellschaft: München / Registered office: Munich
Registergericht: München / Commercial registry: Munich, HRA 88537
WEEE-Reg.-Nr.: DE 52984304
Persönlich haftende Gesellschafterin / General Partner: Nokia Solutions and Networks Management GmbH
Geschäftsleitung / Board of Directors:
Dr. Wolfgang Hackenberg, Ralf Niederberger
Vorsitzender des Aufsichtsrats / Chairman of supervisory board: Hans-Jürgen Bill
Sitz der Gesellschaft: München / Registered office: Munich
Registergericht: München / Commercial registry: Munich, HRB 163416

Dear Ms. Gazzoli, 07789669.4

Due to the new Refund Procedures, please be so kind to register the **refund account** for all applications listed in the attached file.

Any refunds should be made to

Deposit account. 28040039,

Account Holder: Nokia Technologies Oy.

Regarding the debit account, no changes are to be registered.

We thank you for your assistance in this matter.

Best regards,

Emmanuelle WETZEL
Deputy Head Patenting

Domencio MENZIETTI
Senior IP Corporate Counsel

Enc. (is sent by email only)

© Nokia 2019

Amazon.com, Inc., Amazon.com Services LLC - Ex. 1017, Page 000354

METHOD FOR VIDEO CODING AND APPARATUS

TECHNICAL FIELD

There is provided a method for encoding, a method for decoding, an apparatus, computer program products, an encoder and a decoder.

BACKGROUND INFORMATION

This section is intended to provide a background or context to the invention that is recited in the claims. The description herein may include concepts that could be pursued, but are not necessarily ones that have been previously conceived or pursued. Therefore, unless otherwise indicated herein, what is described in this section is not prior art to the description and claims in this application and is not admitted to be prior art by inclusion in this section

A video codec may comprise an encoder which transforms input video into a compressed representation suitable for storage and/or transmission and a decoder that can uncompress the compressed video representation back into a viewable form, or either one of them. The encoder may discard some information in the original video sequence in order to represent the video in a more compact form, for example at a lower bit rate.

Many hybrid video codecs, operating for example according to the International Telecommunication Union's ITU-T H.263 and H.264 coding standards, encode video information in two phases. In the first phase, pixel values in a certain picture area or "block" are predicted. These pixel values can be predicted, for example, by motion compensation mechanisms, which involve finding and indicating an area in one of the previously encoded video frames (or a later coded video frame) that corresponds closely to the block being coded. Additionally, pixel values can be predicted by spatial mechanisms which involve finding and indicating a spatial region relationship, for example by using pixel values around the block to be coded in a specified manner.

Prediction approaches using image information from a previous (or a later) image can also be called as Inter prediction methods, and prediction approaches using image information within the same image can also be called as Intra prediction methods.

The second phase is one of coding the error between the predicted block of pixels and the original block of pixels. This may be accomplished by transforming the difference in pixel values using a specified transform. This transform may be e.g. a Discrete Cosine Transform (DCT) or a variant thereof. After transforming the difference, the transformed difference may be quantized and entropy encoded.

By varying the fidelity of the quantization process, the encoder can control the balance between the accuracy of the pixel representation, (in other words, the quality of the picture) and the size of the resulting encoded video representation (in other words, the file size or transmission bit rate).

The decoder reconstructs the output video by applying a prediction mechanism similar to that used by the encoder in order to form a predicted representation of the pixel blocks (using the motion or spatial information created by the encoder and stored in the compressed representation of the image) and

Amazon.com, Inc., Amazon.com Services LLC - Ex. 1017, Page 000355

prediction error decoding (the inverse operation of the prediction error coding to recover the quantized prediction error signal in the spatial domain).

After applying pixel prediction and error decoding processes the decoder combines the prediction and the prediction error signals (the pixel values) to form the output video frame.

The decoder (and encoder) may also apply additional filtering processes in order to improve the quality of the output video before passing it for display and/or storing as a prediction reference for the forthcoming frames in the video sequence.

In some video codecs, such as High Efficiency Video Coding Working Draft 4, video pictures may be divided into coding units (CU) covering the area of a picture. A coding unit consists of one or more prediction units (PU) defining the prediction process for the samples within the coding unit and one or more transform units (TU) defining the prediction error coding process for the samples in the coding unit. A coding unit may consist of a square block of samples with a size selectable from a predefined set of possible coding unit sizes. A coding unit with the maximum allowed size can be named as a largest coding unit (LCU) and the video picture may be divided into non-overlapping largest coding units. A largest coding unit can further be split into a combination of smaller coding units, e.g. by recursively splitting the largest coding unit and resultant coding units. Each resulting coding unit may have at least one prediction unit and at least one transform unit associated with it. Each prediction unit and transform unit can further be split into smaller prediction units and transform units in order to increase granularity of the prediction and prediction error coding processes, respectively. Each prediction unit may have prediction information associated with it defining what kind of a prediction is to be applied for the pixels within that prediction unit (e.g. motion vector information for inter predicted prediction units and intra prediction directionality information for intra predicted prediction units). Similarly, each transform unit may be associated with information describing the prediction error decoding process for samples within the transform unit (including e.g. discrete cosine transform (DCT) coefficient information). It may be signalled at coding unit level whether prediction error coding is applied or not for each coding unit. In the case there is no prediction error residual associated with the coding unit, it can be considered there are no transform units for the coding unit. The division of the image into coding units, and division of coding units into prediction units and transform units may be signalled in the bitstream allowing the decoder to reproduce the intended structure of these units.

In some video codecs, motion information is indicated by motion vectors associated with each motion compensated image block. These motion vectors represent the displacement of the image block in the picture to be coded (in the encoder) or decoded (at the decoder) and the prediction source block in one of the previously coded or decoded images (or pictures). In order to represent motion vectors efficiently, motion vectors may be coded differentially with respect to block specific predicted motion vector. In some video codecs, the predicted motion vectors are created in a predefined way, for example by calculating the median of the encoded or decoded motion vectors of the adjacent blocks.

Another way to create motion vector predictions is to generate a list or a set of candidate predictions from blocks in the current frame and/or co-located or other blocks in temporal reference

Amazon.com, Inc., Amazon.com Services LLC - Ex. 1017, Page 000356

pictures and signalling the chosen candidate as the motion vector prediction. A spatial motion vector prediction is a prediction obtained only on the basis of information of one or more blocks of the same frame than the current frame whereas temporal motion vector prediction is a prediction obtained on the basis of information of one or more blocks of a frame different from the current frame. It may also be possible to obtain motion vector predictions by combining both spatial and temporal prediction information of one or more encoded blocks. These kinds of motion vector predictions are called as spatio-temporal motion vector predictions.

In addition to predicting the motion vector values, the reference index in the reference picture list can be predicted. The reference index may be predicted from blocks in the current frame and/or co-located or other blocks in a temporal reference picture. Moreover, some high efficiency video codecs employ an additional motion information coding/decoding mechanism, often called merging/merge mode, where all the motion field information, which includes motion vector and corresponding reference picture index for each available reference picture list, may be predicted and used without any modification or correction. Similarly, predicting the motion field information may be carried out using the motion field information of blocks in the current frame and/or co-located or other blocks in temporal reference pictures and the used motion field information is signalled among a list of motion field candidate list filled with motion field information of available blocks in the current frame and/or co-located or other blocks in temporal reference pictures.

In some video codecs the prediction residual after motion compensation is first transformed with a transform kernel (like DCT) and then coded. The reason for this is that often there still exists some correlation among the residual and transform can in many cases help reduce this correlation and provide more efficient coding.

Some video encoders utilize Lagrangian cost functions to find optimal coding modes, e.g. the desired Macroblock mode and associated motion vectors. This kind of cost function uses a weighting factor λ to tie together the (exact or estimated) image distortion due to lossy coding methods and the (exact or estimated) amount of information that is required to represent the pixel values in an image area:

$$C = D + \lambda R \qquad (1)$$

where C is the Lagrangian cost to be minimized, D is the image distortion (e.g. Mean Squared Error) with the mode and motion vectors considered, and R the number of bits needed to represent the required data to reconstruct the image block in the decoder (including the amount of data to represent the candidate motion vectors).

Some video codecs such as hybrid video codecs may generate a list of motion vector predictions (MVP) consisting of motion vectors of spatial adjacent blocks (spatial MVP) and/or motion vectors of blocks in a previously decoded frame (temporal MVP). One of the candidate motion vectors in the list is signalled to be used as the motion vector prediction of the current block. After the list is generated, some of the motion vector prediction candidates may have the same motion information. In this case, the

Amazon.com, Inc., Amazon.com Services LLC - Ex. 1017, Page 000357

identical motion vector prediction candidates may be removed to reduce redundancy. During the decoding, if the temporal motion vector prediction information is unavailable due to e.g. loss of reference frame, the decoder may not know if the temporal motion vector prediction candidate in the list is to be removed. This may lead to uncertainty for mapping the decoded candidate index to the candidates whose removal decision is based on comparing motion information with the temporal motion vector prediction. As a result, false assignment of motion vector prediction candidates may occur which may lead to degradation in the picture quality and drift of false motion information throughout the decoding process.

The document Nakamura "Unification of derivation process for merge mode and MVP" (JCTVC-F419) describes a system that selects the first two available spatial predictors and performs a duplicate removal process between the two spatial predictor candidates (S0 and S1) and one temporal predictor candidate (Col). The duplicate removal process is not considering the locations of the spatial candidates and all three possible combinations of S0, S1 and Col are performed "blindly" as follows: S0 is compared with S1, S0 is compared with Col, and S1 is compared with Col. It may happen that one or both of the selected two spatial predictors are not the best alternatives.

The document Wiegand et al. "WD3 Working draft 3 of high efficiency video coding" (JCTVC-E603) disqualifies candidates if unavailable, if coded with intra mode, or if the motion of a candidate is identical to motion of another prediction unit within the same coding unit. Thus, it would have been more efficient to represent a coding unit with a larger segmentation instead of splitting it into smaller prediction units and indicating identical motion between those small prediction units.

The document Zheng et al "Merge candidate selection in 2NxN, Nx2N, and NxN mode" (m20723) proposes to allow additional merge candidates to survive the process described in Wiegand et al, section 8.4.2.1.2, based on the index of the merge candidate.

SUMMARY

The present invention introduces a method for generating a motion vector prediction list for an image block. In some embodiments video codecs employ in a motion prediction candidate list construction a way to reduce the complexity of the implementation. This can be achieved by performing a limited number of motion information comparisons between candidate pairs to remove the redundant candidates rather than comparing every available candidate pair. The decision of whether comparing two candidates may depend on the order of the candidates to be considered for the list and/or coding/prediction mode and/or location of the blocks associated with the candidates. In some embodiments a video codec employs a merge process for motion information coding and creates a list of motion prediction candidates from which one of the candidates is to be signalled as the motion information for the current coding or prediction unit. The motion prediction candidates may consist of

Amazon.com, Inc., Amazon.com Services LLC - Ex. 1017, Page 000358

several spatial motion predictions and a temporal motion prediction. The spatial candidates are obtained from the motion information of e.g. spatial neighbour blocks. ¶

The invention is defined in the appended claims. Any examples and embodiments of the description not falling within the scope of the claims do not form part of the invention and are provided for illustrative purposes only. ¶

According to a first aspect of the present invention there is provided a method according to appended claim 1. ¶

According to a second aspect of the present invention there is provided a method according to appended claim 6. ¶

According to a third aspect of the present invention there is provided an apparatus according to appended claim 9. ¶

According to a fourth aspect of the present invention there is provided an apparatus according to appended claim 10. ¶

According to a fifth aspect of the present invention there is provided a computer-readable storage medium according to appended claim 11. ¶

According to a sixth aspect of the present invention there is provided a computer-readable storage medium according to appended claim 12.

~~According to a first aspect of the present invention there is provided a method comprising:~~

~~receiving a block of pixels including a prediction unit; determining a set of spatial motion vector prediction candidates for the block of pixels; the spatial motion vector prediction candidates being provided with motion information;~~

~~selecting a first spatial motion vector prediction candidate from the set of spatial motion vector prediction candidates as a potential spatial motion vector prediction candidate to be included in a merge list for the prediction unit;~~

~~determining a subset of spatial motion vector predictions based on the location of the block associated with the first spatial motion vector prediction candidate;~~

~~comparing motion information of the first spatial motion vector prediction candidate with motion information of the spatial motion vector prediction candidate in the determined subset of spatial motion vector prediction candidates;~~

~~if at least one of the comparisons indicates that the motion vector information of the spatial motion vector prediction candidates correspond with each other, excluding the first spatial motion vector prediction candidate from the merge list.~~

~~According to a second aspect of the present invention there is provided a method comprising:~~

~~receiving an encoded block of pixels including a prediction unit;~~

Amazon.com, Inc., Amazon.com Services LLC - Ex. 1017, Page 000359

DESCRIPTION OF THE DRAWINGS

For better understanding of the present invention, reference will now be made by way of example to the accompanying drawings in which:

Figure 1 shows schematically an electronic device employing some embodiments of the invention;

Figure 2 shows schematically a user equipment suitable for employing some embodiments of the invention;

Figure 3 further shows schematically electronic devices employing embodiments of the invention connected using wireless and wired network connections;

Figure 4a shows schematically an embodiment of the invention as incorporated within an encoder;

Figure 4b shows schematically an embodiment of a prediction reference list generation and modification according to some embodiments of the invention;

Figures 5a and 5b show a flow diagram showing the operation of an embodiment of the invention with respect to the encoder as shown in figure 4a;

Figure 6a illustrates an example of spatial and temporal prediction of a prediction unit;

Figure 6b illustrates another example of spatial and temporal prediction of a prediction unit;

Figure 7 shows schematically an embodiment of the invention as incorporated within a decoder;

Figures 8a and 8b show a flow diagram of showing the operation of an embodiment of the invention with respect to the decoder shown in figure 7;

Figure 9 illustrates an example of a coding unit and some neighbour blocks of the coding unit;

Figure 10a illustrates an example of a horizontal division of the coding unit;

Figure 10b illustrates an example of a vertical division of the coding unit;

Figure 11a illustrates locations of five spatial neighbours A0, A1, B0, B1, B2 for a prediction unit generated as the second prediction unit of a horizontally divided coding unit;

Figure 11b illustrates locations of five spatial neighbours for a prediction unit generated as the second prediction unit of a vertically divided coding unit; and

Figure 12 illustrates an example of blocks between some spatial neighbours of a coding unit.

DETAILED DESCRIPTION OF SOME EXAMPLE EMBODIMENTS

The following describes in further detail suitable apparatus and possible mechanisms for the provision of improving the prediction accuracy and hence possibly reducing information to be transmitted in video coding systems. In this regard reference is first made to Figure 1 which shows a schematic block diagram of an exemplary apparatus or electronic device 50, which may incorporate a codec according to an embodiment of the invention.

The electronic device 50 may for example be a mobile terminal or user equipment of a wireless communication system. However, it would be appreciated that embodiments of the invention may be

Amazon.com, Inc., Amazon.com Services LLC - Ex. 1017, Page 000360

implemented within any electronic device or apparatus which may require encoding and decoding or encoding or decoding video images.

The apparatus 50 may comprise a housing 30 for incorporating and protecting the device. The apparatus 50 further may comprise a display 32 in the form of a liquid crystal display. In other embodiments of the invention the display may be any suitable display technology suitable to display an image or video. The apparatus 50 may further comprise a keypad 34. In other embodiments of the invention any suitable data or user interface mechanism may be employed. For example the user interface may be implemented as a virtual keyboard or data entry system as part of a touch-sensitive display. The apparatus may comprise a microphone 36 or any suitable audio input which may be a digital or analogue signal input. The apparatus 50 may further comprise an audio output device which in embodiments of the invention may be any one of: an earpiece 38, speaker, or an analogue audio or digital audio output connection. The apparatus 50 may also comprise a battery 40 (or in other embodiments of the invention the device may be powered by any suitable mobile energy device such as solar cell, fuel cell or clockwork generator). The apparatus may further comprise an infrared port 42 for short range line of sight communication to other devices. In other embodiments the apparatus 50 may further comprise any suitable short range communication solution such as for example a Bluetooth wireless connection or a USB/firewire wired connection.

The apparatus 50 may comprise a controller 56 or processor for controlling the apparatus 50. The controller 56 may be connected to memory 58 which in embodiments of the invention may store both data in the form of image and audio data and/or may also store instructions for implementation on the controller 56. The controller 56 may further be connected to codec circuitry 54 suitable for carrying out coding and decoding of audio and/or video data or assisting in coding and decoding carried out by the controller 56.

The apparatus 50 may further comprise a card reader 48 and a smart card 46, for example a UICC and UICC reader for providing user information and being suitable for providing authentication information for authentication and authorization of the user at a network.

The apparatus 50 may comprise radio interface circuitry 52 connected to the controller and suitable for generating wireless communication signals for example for communication with a cellular communications network, a wireless communications system or a wireless local area network. The apparatus 50 may further comprise an antenna 44 connected to the radio interface circuitry 52 for transmitting radio frequency signals generated at the radio interface circuitry 52 to other apparatus(es) and for receiving radio frequency signals from other apparatus(es).

In some embodiments of the invention, the apparatus 50 comprises a camera capable of recording or detecting individual frames which are then passed to the codec 54 or controller for processing. In some embodiments of the invention, the apparatus may receive the video image data for processing from another device prior to transmission and/or storage. In some embodiments of the invention, the apparatus 50 may receive either wirelessly or by a wired connection the image for coding/decoding.

Amazon.com, Inc., Amazon.com Services LLC - Ex. 1017, Page 000361

With respect to Figure 3, an example of a system within which embodiments of the present invention can be utilized is shown. The system 10 comprises multiple communication devices which can communicate through one or more networks. The system 10 may comprise any combination of wired or wireless networks including, but not limited to a wireless cellular telephone network (such as a GSM, UMTS, CDMA network etc), a wireless local area network (WLAN) such as defined by any of the IEEE 802.x standards, a Bluetooth personal area network, an Ethernet local area network, a token ring local area network, a wide area network, and the Internet.

The system 10 may include both wired and wireless communication devices or apparatus 50 suitable for implementing embodiments of the invention.

For example, the system shown in Figure 3 shows a mobile telephone network 11 and a representation of the internet 28. Connectivity to the internet 28 may include, but is not limited to, long range wireless connections, short range wireless connections, and various wired connections including, but not limited to, telephone lines, cable lines, power lines, and similar communication pathways.

The example communication devices shown in the system 10 may include, but are not limited to, an electronic device or apparatus 50, a combination of a personal digital assistant (PDA) and a mobile telephone 14, a PDA 16, an integrated messaging device (IMD) 18, a desktop computer 20, a notebook computer 22. The apparatus 50 may be stationary or mobile when carried by an individual who is moving. The apparatus 50 may also be located in a mode of transport including, but not limited to, a car, a truck, a taxi, a bus, a train, a boat, an airplane, a bicycle, a motorcycle or any similar suitable mode of transport.

Some or further apparatuses may send and receive calls and messages and communicate with service providers through a wireless connection 25 to a base station 24. The base station 24 may be connected to a network server 26 that allows communication between the mobile telephone network 11 and the internet 28. The system may include additional communication devices and communication devices of various types.

The communication devices may communicate using various transmission technologies including, but not limited to, code division multiple access (CDMA), global systems for mobile communications (GSM), universal mobile telecommunications system (UMTS), time divisional multiple access (TDMA), frequency division multiple access (FDMA), transmission control protocol-internet protocol (TCP-IP), short messaging service (SMS), multimedia messaging service (MMS), email, instant messaging service (IMS), Bluetooth, IEEE 802.11 and any similar wireless communication technology. A communications device involved in implementing various embodiments of the present invention may communicate using various media including, but not limited to, radio, infrared, laser, cable connections, and any suitable connection.

With respect to Figure 4a, a block diagram of a video encoder suitable for carrying out embodiments of the invention is shown. Furthermore, with respect to Figures 5a and 5b, the operation of the encoder exemplifying embodiments of the invention specifically with respect to construction of the list of candidate predictions is shown as a flow diagram.

Amazon.com, Inc., Amazon.com Services LLC - Ex. 1017, Page 000362

Figure 4a shows the encoder as comprising a pixel predictor 302, prediction error encoder 303 and prediction error decoder 304. Figure 4a also shows an embodiment of the pixel predictor 302 as comprising an inter-predictor 306, an intra-predictor 308, a mode selector 310, a filter 316, and a reference frame memory 318. In this embodiment the mode selector 310 comprises a block processor 381 and a cost evaluator 382. The encoder may further comprise an entropy encoder 330 for entropy encoding the bit stream.

Figure 4b depicts an embodiment of the inter predictor 306. The inter predictor 306 comprises a reference frame selector 360 for selecting reference frame or frames, a motion vector definer 361, a prediction list modifier 363 and a motion vector selector 364. These elements or some of them may be part of a prediction processor 362 or they may be implemented by using other means.

The pixel predictor 302 receives the image 300 to be encoded at both the inter-predictor 306 (which determines the difference between the image and a motion compensated reference frame 318) and the intra-predictor 308 (which determines a prediction for an image block based only on the already processed parts of the current frame or picture). The output of both the inter-predictor and the intra-predictor may be passed to the mode selector 310. The intra-predictor 308 may have more than one intra-prediction modes. Hence, each mode may perform the intra-prediction and provide the predicted signal to the mode selector 310. The mode selector 310 also receives a copy of the image 300.

The mode selector 310 determines which encoding mode to use to encode the current block. If the mode selector 310 decides to use an inter-prediction mode it will pass the output of the inter-predictor 306 to the output of the mode selector 310. If the mode selector 310 decides to use an intra-prediction mode it will pass the output of one of the intra-predictor modes to the output of the mode selector 310.

The output of the mode selector is passed to a first summing device 321. The first summing device may subtract the pixel predictor 302 output from the image 300 to produce a first prediction error signal 320 which is input to the prediction error encoder 303.

The pixel predictor 302 further receives from a preliminary reconstructor 339 the combination of the prediction representation of the image block 312 and the output 338 of the prediction error decoder 304. The preliminary reconstructed image 314 may be passed to the intra-predictor 308 and to a filter 316. The filter 316 receiving the preliminary representation may filter the preliminary representation and output a final reconstructed image 340 which may be saved in a reference frame memory 318. The reference frame memory 318 may be connected to the inter-predictor 306 to be used as the reference image against which the future image 300 is compared in inter-prediction operations.

The operation of the pixel predictor 302 may be configured to carry out any known pixel prediction algorithm known in the art.

The pixel predictor 302 may also comprise a filter 385 to filter the predicted values before outputting them from the pixel predictor 302.

The operation of the prediction error encoder 302 and prediction error decoder 304 will be described hereafter in further detail. In the following examples the encoder generates images in terms of 16x16 pixel macroblocks which go to form the full image or picture. Thus, for the following examples

Amazon.com, Inc., Amazon.com Services LLC - Ex. 1017, Page 000363

the pixel predictor 302 outputs a series of predicted macroblocks of size 16x16 pixels and the first summing device 321 outputs a series of 16x16 pixel residual data macroblocks which may represent the difference between a first macro-block in the image 300 against a predicted macro-block (output of pixel predictor 302). It would be appreciated that other size macro blocks may be used.

The prediction error encoder 303 comprises a transform block 342 and a quantizer 344. The transform block 342 transforms the first prediction error signal 320 to a transform domain. The transform is, for example, the DCT transform. The quantizer 344 quantizes the transform domain signal, e.g. the DCT coefficients, to form quantized coefficients.

The prediction error decoder 304 receives the output from the prediction error encoder 303 and performs the opposite processes of the prediction error encoder 303 to produce a decoded prediction error signal 338 which when combined with the prediction representation of the image block 312 at the second summing device 339 produces the preliminary reconstructed image 314. The prediction error decoder may be considered to comprise a dequantizer 346, which dequantizes the quantized coefficient values, e.g. DCT coefficients, to reconstruct the transform signal and an inverse transformation block 348, which performs the inverse transformation to the reconstructed transform signal wherein the output of the inverse transformation block 348 contains reconstructed block(s). The prediction error decoder may also comprise a macroblock filter (not shown) which may filter the reconstructed macroblock according to further decoded information and filter parameters.

In the following the operation of an example embodiment of the inter predictor 306 will be described in more detail. The inter predictor 306 receives the current block for inter prediction. It is assumed that for the current block there already exists one or more neighbouring blocks which have been encoded and motion vectors have been defined for them. For example, the block on the left side and/or the block above the current block may be such blocks. Spatial motion vector predictions for the current block can be formed e.g. by using the motion vectors of the encoded neighbouring blocks and/or of non-neighbour blocks in the same slice or frame, using linear or non-linear functions of spatial motion vector predictions, using a combination of various spatial motion vector predictors with linear or non-linear operations, or by any other appropriate means that do not make use of temporal reference information. It may also be possible to obtain motion vector predictors by combining both spatial and temporal prediction information of one or more encoded blocks. These kinds of motion vector predictors may also be called as spatio-temporal motion vector predictors.

Reference frames used in encoding the neighbouring blocks have been stored to the reference frame memory 404. The reference frames may be short term references or long term references and each reference frame may have a unique index indicative of the location of the reference frame in the reference frame memory. When a reference frame is no longer used as a reference frame it may be removed from the reference frame memory or marked as a non-reference frame wherein the storage location of that reference frame may be occupied for a new reference frame. In addition to the reference frames of the neighbouring blocks the reference frame selector 360 may also select one or more other frames as potential reference frames and store them to the reference frame memory.

Amazon.com, Inc., Amazon.com Services LLC - Ex. 1017, Page 000364

Motion vector information of encoded blocks is also stored into the memory so that the inter predictor 306 is able to retrieve the motion vector information when processing motion vector candidates for the current block.

In some embodiments the motion vectors are stored into one or more lists. For example, motion vectors of uni-directionally predicted frames (e.g. P-frames) may be stored to a list called as list 0. For bi-directionally predicted frames (e.g. B-frames) there may be two lists (list 0 and list 1) and for multi-predicted frames there may be more than two lists. Reference frame indices possibly associated with the motion vectors may also be stored in one or more lists.

In some embodiments there may be two or more motion vector prediction procedures and each procedure may have its own candidate set creation process. In one procedure, only the motion vector values are used. In another procedure, which may be called as a Merge Mode, each candidate element may comprise 1) The information whether 'block was uni-predicted using only list0' or 'block was uni-predicted using only list1' or 'block was bi-predicted using list0 and list1' 2) motion vector value for list0 3) Reference picture index in list0 4) motion vector value for list1 5) Reference picture index list1. Therefore, whenever two prediction candidates are to be compared, not only the motion vector values are compared, but also the five values mentioned above may be compared to determine whether they correspond with each other or not. On the other hand, if any of the comparisons indicate that the prediction candidates do not have equal motion information, no further comparisons need be performed.

The motion vector definer 361 defines candidate motion vectors for the current frame by using one or more of the motion vectors of one or more neighbour blocks and/or other blocks of the current block in the same frame and/or co-located blocks and/or other blocks of the current block in one or more other frames. These candidate motion vectors can be called as a set of candidate predictors or a predictor set. Each candidate predictor thus represents the motion vector of one or more already encoded block. In some embodiments the motion vector of the candidate predictor is set equal to the motion vector of a neighbour block for the same list if the current block and the neighbour block refer to the same reference frames for that list. Also for temporal prediction there may be one or more previously encoded frames wherein motion vectors of a co-located block or other blocks in a previously encoded frame can be selected as candidate predictors for the current block. The temporal motion vector predictor candidate can be generated by any means that make use of the frames other than the current frame.

The candidate motion vectors can also be obtained by using more than one motion vector of one or more other blocks such as neighbour blocks of the current block and/or co-located blocks in one or more other frames. As an example, any combination of the motion vector of the block to the left of the current block, the motion vector of the block above the current block, and the motion vector of the block at the up-right corner of the current block may be used (i.e. the block to the right of the block above the current block). The combination may be a median of the motion vectors or calculated by using other formulas. For example, one or more of the motion vectors to be used in the combination may be scaled by a scaling factor, an offset may be added, and/or a constant motion vector may be added. In some embodiments the combined motion vector is based on both temporal and spatial motion vectors, e.g. the

Amazon.com, Inc., Amazon.com Services LLC - Ex. 1017, Page 000365

motion vector of one or more of the neighbour block or other block of the current block and the motion vector of a co-located block or other block in another frame.

If a neighbour block does not have any motion vector information a default motion vector such as a zero motion vector may be used instead.

Figure 9 illustrates an example of a coding unit 900 and some neighbour blocks 901—905 of the coding unit. As can be seen from Figure 9, if the coding unit 900 represents the current block, the neighbouring blocks 901—905 labelled A0, A1, B0, B1 and B2 could be such neighbour blocks which may be used when obtaining the candidate motion vectors.

Creating additional or extra motion vector predictions based on previously added predictors may be needed when the current number of candidates is limited or insufficient. This kind of creating additional candidates can be performed by combining previous two predictions and/or processing one previous candidate by scaling or adding offset and/or adding a zero motion vector with various reference indices. Hence, the motion vector definer 361 may examine how many motion vector candidates can be defined and how many potential candidate motion vectors exist for the current block. If the number of potential motion vector candidates is smaller than a threshold, the motion vector definer 361 may create additional motion vector predictions.

In some embodiments the combined motion vector can be based on motion vectors in different lists. For example, one motion vector may be defined by combining one motion vector from the list 0 and one motion vector from the list 1 e.g. when the neighbouring or co-located block is a bi-directionally predicted block and there exists one motion vector in the list 0 and one motion vector in the list 1 for the bi-directionally predicted block.

To distinguish the current block from the encoded/decoded blocks the motion vectors of which are used as candidate motion vectors, those encoded/decoded blocks are also called as reference blocks in this application.

In some embodiments not only the motion vector information of the reference block(s) is obtained (e.g. by copying) but also a reference index of the reference block in the reference picture list may be copied to the candidate list. The information whether the block was uni-predicted using only list0 or the block was uni-predicted using only list1 or the block was bi-predicted using list0 and list1 may also be copied. The candidate list may also be called as a candidate set or a set of motion vector prediction candidates.

Figure 6a illustrates an example of spatial and temporal prediction of a prediction unit. There is depicted the current block 601 in the frame 600 and a neighbour block 602 which already has been encoded. The motion vector definer 361 has defined a motion vector 603 for the neighbour block 602 which points to a block 604 in the previous frame 605. This motion vector can be used as a potential spatial motion vector prediction 610 for the current block. Figure 6a depicts that a co-located block 606 in the previous frame 605, i.e. the block at the same location than the current block but in the previous frame, has a motion vector 607 pointing to a block 609 in another frame 608. This motion vector 607 can be used as a potential temporal motion vector prediction-611 for the current frame.

Amazon.com, Inc., Amazon.com Services LLC - Ex. 1017, Page 000366

Figure 6b illustrates another example of spatial and temporal prediction of a prediction unit. In this example the block 606 of the previous frame 605 uses bi-directional prediction based on the block 609 of the frame preceding the frame 605 and on the block 612 succeeding the current frame 600. The temporal motion vector prediction for the current block 601 may be formed by using both the motion vectors 607, 614 or either of them.

The operation of the prediction list modifier 363 will now be described in more detail with reference to the flow diagram of Figures 5a and 5b. The prediction list modifier 363 initializes a motion vector prediction list to default values in block 500 of Figure 5a. The prediction list modifier 363 may also initialize a list index to an initial value such as zero. Then, in block 501 the prediction list modifier checks whether there are any motion vector candidates to process. If there is at least one motion vector candidate in the predictor set for processing, the prediction list modifier 363 generates the next motion vector candidate which may be a temporal motion vector or a spatial motion vector. The comparison can be an identicality/equivalence check or comparing the (absolute) difference against a threshold or any other similarity metric.

In the following, a merge process for motion information coding according to an example embodiment will be described in more detail. The encoder creates a list of motion prediction candidates from which one of the candidates is to be signalled as the motion information for the current coding unit or prediction unit. The motion prediction candidates may consist of several spatial motion predictions and a temporal motion prediction. The spatial candidates can be obtained from the motion information of e.g. the spatial neighbour blocks A0, A1, B0, B1, B2, whose motion information is used as spatial candidate motion predictions. The temporal motion prediction candidate may be obtained by processing the motion of a block in a frame other than the current frame. In this example embodiment, the encoder operations to construct the merge list for the spatial candidates may include the following. The operations may be carried out by the prediction list modifier 363, for example.

A maximum number of spatial motion prediction candidates to be included in the merge list may be defined. This maximum number may have been stored, for example, to the memory 58 of the apparatus 50, or to another appropriate place. It is also possible to determine the maximum number by using other means, or it may be determined in the software of the encoder of the apparatus 50.

In some embodiments the maximum number of spatial motion prediction candidates to be included in the merge list is four but in some embodiments the maximum number may be less than four or greater than four.

In this example the spatial motion prediction candidates are the spatial neighbour blocks A0, A1, B0, B1, B2. The spatial motion vector prediction candidate A1 is located on the left side of the prediction unit when the encoding/decoding order is from left to right and from top to bottom of the frame, slice or another entity to be encoded/decoded. Respectively, the spatial motion vector prediction candidate B1 is located above the prediction unit; the spatial motion vector prediction candidate B0 is on the right side of the spatial motion vector prediction candidate B1; the spatial motion vector prediction candidate A0 is below the spatial motion vector prediction candidate A1; and the spatial motion vector prediction

Amazon.com, Inc., Amazon.com Services LLC - Ex. 1017, Page 000367

candidate B2 is located on the same column than spatial motion vector prediction candidate A1 and on the same row than the spatial motion vector prediction candidate B1. In other words, the spatial motion vector prediction candidate B2 is cornerwise neighbouring the prediction unit as can be seen e.g. from Figure 9.

These spatial motion prediction candidates can be processed in a predetermined order, for example, A1, B1, B0, A0 and B2. The first spatial motion prediction candidate to be selected for further examination is thus A1. Before further examination is performed for the selected spatial motion prediction candidate, it may be determined whether the merge list already contains a maximum number of spatial motion prediction candidates. Hence, the prediction list modifier 363 compares 502 the number of spatial motion prediction candidates in the merge list with the maximum number, and if the number of spatial motion prediction candidates in the merge list is not less than the maximum number, the selected spatial motion prediction candidate is not included in the merge list and the process of constructing the merge list can be stopped 526. On the other hand, if the number of spatial motion prediction candidates in the merge list is less than the maximum number, a further analyses of the selected spatial motion prediction candidate is performed (blocks 504-522).

For all the spatial motion prediction candidates for which the further analyses is to be performed, some or all of the following conditions below may be tested for determining whether to include the spatial motion prediction candidate in the merge list.

The prediction list modifier 363 examines 504 if the prediction unit or block covering the spatial motion prediction candidate block is not available for motion prediction. If so, the candidate is not included in the merge list. The reason that the block is not available may be that the block is either coded in intra mode or resides in a different slice or outside of the picture area.

In addition to the common conditions above, for each spatial motion prediction candidate, if any of the following conditions holds, then the candidate is not included in the merge list, otherwise, it is included.

The prediction list modifier 363 determines 506 which spatial motion prediction candidate of the set of spatial motion prediction candidates is in question. If the spatial motion prediction candidate is the block A1, one or more of the following conditions may be examined 508, 510 to determine whether to include this spatial motion prediction candidate in the merge list or not. If the current coding unit 100 is vertically split into two rectangle prediction units 103, 104 as depicted in Figure 10b and the current prediction unit is the second prediction unit 104 in the coding/decoding order (508), this spatial motion prediction candidate is not included in the merge list. If the current coding unit 100 is not vertically split into two rectangle prediction units but it is horizontally split into two rectangle prediction units 101, 102 as depicted in Figure 10a and the current prediction unit is the second prediction unit in the coding/decoding order and the block A1 has the same motion information as the block B1 (510), this spatial motion prediction candidate (block A1) is not included in the merge list. In the example of Figure 10a the second prediction unit is the lower prediction unit 102 of the coding unit 100 and in the example of Figure 10b the second prediction unit is the rightmost prediction unit 104 of the coding unit 100. If

Amazon.com, Inc., Amazon.com Services LLC - Ex. 1017, Page 000368

none of the conditions above is fulfilled the block A1 is included in the merge list as a spatial motion prediction candidate (524).

If the spatial motion prediction candidate is the block B1, one or more of the following conditions may be examined 512, 514 to determine whether to include this spatial motion prediction candidate in the merge list or not. If the current coding unit 100 is horizontally split into two rectangle prediction units 101, 102 as depicted in Figure 10a and the current prediction unit is the second prediction unit 104 in the coding/decoding order (512), this spatial motion prediction candidate is not included in the merge list. If the current coding unit 100 is not horizontally split into two rectangle prediction units and if the block B1 has the same motion information than the block A1 (514), this spatial motion prediction candidate (block B1) is not included in the merge list. If none of the conditions above is fulfilled the block B1 is included in the merge list as a spatial motion prediction candidate (524).

If the spatial motion prediction candidate is the block B0, this spatial motion prediction candidate is not included in the merge list if the block B0 has the same motion information than the block B1 (516). Otherwise, if the number of spatial motion prediction candidates in the merge list is less than the maximum number of spatial motion prediction candidates, this spatial motion prediction candidate (block B0) is included in the merge list (524).

If the spatial motion prediction candidate is the block A0, this spatial motion prediction candidate is not included in the merge list if the block A0 has the same motion information than the block A1 (518). Otherwise, if the number of spatial motion prediction candidates in the merge list is less than the maximum number of spatial motion prediction candidates, this spatial motion prediction candidate (block A0) is included in the merge list (524).

If the spatial motion prediction candidate is the block B2, this spatial motion prediction candidate is not included in the merge list if the maximum number of spatial motion prediction candidates is four and the other blocks A0, A1, B0, and B1 are all decided to be included in the merge list (520). Otherwise, if the number of spatial motion prediction candidates in the merge list is less than the maximum number of spatial motion prediction candidates, the block B2 is not included in the merge list if the block B2 has the same motion information than the block B1 or the block A1 (522).

Then, after processing the blocks A1, B1, B0, A0 and B2 and including a subset of them in the merge list based on the above described conditions, no more redundancy check between these candidates are performed and remaining temporal motion prediction candidate and/or other possible additional candidates may be processed.

Comparing two blocks whether they have the same motion may be performed by comparing all the elements of the motion information, namely 1) The information whether 'the prediction unit is uni-predicted using only reference picture list0' or 'the prediction unit is uni-predicted using only reference picture list1' or 'the prediction unit is bi-predicted using both reference picture list0 and list1' 2) Motion vector value corresponding to the reference picture list0 3) Reference picture index in the reference picture list0 4) Motion vector value corresponding to the reference picture list1 5) Reference picture index in the reference picture list1.

Amazon.com, Inc., Amazon.com Services LLC - Ex. 1017, Page 000369

In some embodiments similar restrictions for comparing candidate pairs can be applied if the current coding unit is coded/decoded by splitting into four or any number of prediction units.

The maximum number of merge list candidates can be any non-zero value. In the example above the merger list candidates were the spatial neighbour blocks A0, A1, B0, B1, B2 and the temporal motion prediction candidate, but there may be more than one temporal motion prediction candidate and also other spatial motion prediction candidates than the spatial neighbour blocks. In some embodiments there may also be other spatial neighbour blocks than the blocks A0, A1, B0, B1, B2.

It is also possible that the maximum number of spatial motion prediction candidates included in the list can be different than four.

In some embodiments the maximum number of merge list candidates and maximum number of spatial motion prediction candidates included in the list can depend on whether a temporal motion vector candidate is included in the list or not.

A different number of spatial motion prediction candidates located at various locations in the current frame can be processed. The locations can be the same as or different than A1, B1, B0, A0 and B2.

The decision of including which spatial motion prediction candidates in the list can be realized in two steps. In the first step, some of the candidates are eliminated by checking whether the candidate block is available and/or the candidate block's prediction mode is intra and/or whether the current block is a second prediction unit of a coding unit coded with two prediction units and the candidate has the same motion with the first prediction unit. In the second step, remaining candidates are examined and some or all of them are included in the merge list. The examination in the second step does not include comparing motion information of each possible candidate pair but includes a subset of the possible comparison combinations.

The decisions for the candidates can be taken in any order of A1, B1, B0, A0 and B2 or independently in parallel.

For each candidate and/or a subset of the candidates, the following conditions may also be checked: Whether the candidate block has the same motion as the first prediction unit of the current coding unit when the current coding unit is split into two rectangle prediction units and the current prediction unit is the second prediction unit in the coding/decoding order.

Additional conditions related to various properties of current and/or previous slices and/or current and/or neighbour blocks can be utilized for determining whether to include a candidate in the list.

Motion comparison can be realized by comparing a subset of the whole motion information. For example, only the motion vector values for some or all reference picture lists and/or reference indices for some or all reference picture lists and/or an identifier value assigned to each block to represent its motion information can be compared. The comparison can be an identicality or an equivalence check or comparing the (absolute) difference against a threshold or any other similarity metric.

Amazon.com, Inc., Amazon.com Services LLC - Ex. 1017, Page 000370

Conditions for deciding whether a candidate is to be included in the list can include motion information comparison with any subset of the candidates as long as not all possible candidate pairs are compared eventually.

Deciding whether a temporal motion vector candidate is to be included in the list can be based on comparing its motion information with motion information of a subset of the spatial motion vector prediction candidates.

When comparing motion information of two blocks, motion information of additional blocks can be considered too. For example, when comparing the block B2 and the block A1, all the blocks between the block B2 and the block A1 (illustrated in Figure 12) are checked whether they have the same motion; and when comparing the block B2 and the block B1, all the blocks between the block B2 and the block B1 (illustrated in Figure 12) are checked whether they have the same motion. This embodiment can be implemented so that the right-most block of each prediction unit or all blocks of each prediction unit may store the information of how many consecutive blocks to the above have the same motion information. Also the bottom-most block of each prediction unit or all blocks of each prediction unit may store the information of how many consecutive blocks to the left have the same motion information. Using this information the condition for not including B0 in the list can be realized by checking if the number of consecutive blocks with the same motion to the left of B0 is greater than 0. The condition for not including A0 in the list can be realized by checking if the number of consecutive blocks with same motion to the above of A0 is greater than 0. The conditions for not including B2 can be modified as follows:

It is not examined whether the block B2 has same motion as the block B1 or whether the block B2 has same motion as the block A1, but how many consecutive blocks exists to the left of the block B1 with the same motion than the block B1 and/or how many consecutive blocks exist above the block A1 with the same motion. If the number of consecutive blocks with the same motion to the left of the block B1 is greater than the number of blocks between B2 and B1, or if the number of consecutive blocks with the same motion above the block A1 is greater than the number of blocks between the block B2 and the block A1, the block B2 is not included in the merge list.

If the above implementation is used, the value of how many consecutive blocks to the left/above have the same motion information can be determined by direct comparison of motion information or checking the prediction mode and/or the merge index if the block employs a merge process.

When coding/decoding the selected merge index, the information whether the merge process is employed for coding/decoding a Skip mode coding unit or an Inter Merge mode prediction unit can be taken into account. For example, if a context adaptive binary arithmetic coder (CABAC) is used for entropy coding/decoding, different contexts can be used for the bins depending on the coding mode (Skip mode or inter merge mode) of the current block. Furthermore, assigning two contexts depending on whether the merge process is employed in a Skip mode coding unit or an inter Merge mode prediction unit can be applied for only the most significant bin of the merge index.

Amazon.com, Inc., Amazon.com Services LLC - Ex. 1017, Page 000371

During the process of removal of redundant candidates, comparison between motion vector predictor candidates can also be based on any other information than the motion vector values. For example, it can be based on linear or non-linear functions of motion vector values, coding or prediction types of the blocks used to obtain the motion information, block size, the spatial location in the frame/(largest) coding unit/macroblock, the information whether blocks share the same motion with a block, the information whether blocks are in the same coding/prediction unit, etc.

The following pseudo code illustrates an example embodiment of the invention for constructing the merging list.

Inputs to this process are

- a luma location (xP, yP) specifying the top-left luma sample of the current prediction unit relative to the top-left sample of the current picture;
- variables specifying the width and the height of the prediction unit for luma, nPSW and nPSH; and
- a variable PartIdx specifying the index of the current prediction unit within the current coding unit.

Outputs of this process are (with N being replaced by A_0, A_1, B_0, B_1 or B_2 and with X being replaced by 0 or 1)

- the availability flags availableFlagN of the neighbouring prediction units,
- the reference indices refIdxLXN of the neighbouring prediction units,
- the prediction list utilization flags predFlagLXN of the neighbouring prediction units,
- the motion vectors mvLXN of the neighbouring prediction units.

For the derivation of availableFlagN, with N being A_0, A_1, B_0, B_1 or B_2 and (xN, yN) being (xP−1, yP + nPSH), (xP−1, yP + nPSH−1), (xP + nPSW, yP−1), (xP+nPSW−1, yP−1) or (xP−1, yP−1), the following applies.

- If one of the following conditions is true, the availableFlagN is set equal to 0, both components mvLXN are set equal to 0, refIdxLXN and predFlagLX[xN, yN] of the prediction unit covering luma location (xN, yN) are assigned respectively to mvLXN, refIdxLXN and predFlagLXN.
  - N is equal to B_2 and $availableFlagA_0 + availableFlagA_1 + availableFlagB_0 + availableFlagB_1$ is equal to 4.
  - The prediction unit covering luma location (xN, yN) is not available or PredMode is MODE_INTRA.
  - N is equal to A1 and PartMode of the current prediction unit is PART_Nx2N or PART_nLx2N or PART_nRx2N and PartIdx is equal to 1.
  - N is equal to A1 and PartMode of the current prediction unit is PART_2NxN or PART_2NxnU or PART_2NxnD and PartIdx is equal to 1 and the prediction units covering luma location (xP+nPSW−1, yP−1) (N = B1) and luma location (xN, yN) (Cand. N) have identical motion parameters:
    - mvLX[xP+nPSW−1, yP−1] == mvLX[xN, yN]
    - refIdxLX[xP+nPSW−1, yP−1] == refIdxLX[xN, yN]
    - predFlagLX[xP+nPSW−1, yP−1] == predFlagLX[xN, yN]

Amazon.com, Inc., Amazon.com Services LLC - Ex. 1017, Page 000372

- N is equal to B1 and PartMode of the current prediction unit is 2NxN or PART_2NxnU or PART_2NxnD and PartIdx is equal to 1.
- N is equal to B1 and the prediction units covering luma location (xP−1, yP+nPSH−1) (N = A1) and luma location (xN, yN) (Cand. N) have identical motion parameters:
  - mvLX[xP−1, yP+nPSH−1] == mvLX[xN, yN]
  - refIdxLX[xP−1, yP+nPSH−1] == refIdxLX[xN, yN]
  - predFlagLX[xP−1, yP+nPSH−1] == predFlagLX[xN, yN]
- N is equal to B0 and the prediction units covering luma location (xP+nPSW−1, yP−1) (N = B1) and luma location (xN, yN) (Cand. N) have identical motion parameters:
  - mvLX[xP+nPSW−1, yP−1] == mvLX[xN, yN]
  - refIdxLX[xP+nPSW−1, yP−1] == refIdxLX[xN, yN]
  - predFlagLX[xP+nPSW−1, yP−1] == predFlagLX[xN, yN]
- N is equal to A0 and the prediction units covering luma location (xP−1, yP+nPSH−1) (N = A1) and luma location (xN, yN) (Cand. N) have identical motion parameters:
  - mvLX[xP−1, yP+nPSH−1] == mvLX[xN, yN]
  - refIdxLX[xP−1, yP+nPSH−1] == refIdxLX[xN, yN]
  - predFlagLX[xP−1, yP+nPSH−1] == predFlagLX[xN, yN]
- N is equal to B2 and the prediction units covering luma location (xP+nPSW−1, yP−1) (N = B1) and luma location (xN, yN) (Cand. N) have identical motion parameters:
  - mvLX[xP+nPSW−1, yP−1] == mvLX[xN, yN]
  - refIdxLX[xP+nPSW−1, yP−1] == refIdxLX[xN, yN]
  - predFlagLX[xP+nPSW−1, yP−1] == predFlagLX[xN, yN]
- N is equal to B2 and the prediction units covering luma location (xP−1, yP+nPSH−1) (N = A1) and luma location (xN, yN) (Cand. N) have identical motion parameters:
  - mvLX[xP−1, yP+nPSH−1] == mvLX[xN, yN]
  - refIdxLX[xP−1, yP+nPSH−1] == refIdxLX[xN, yN]
  - predFlagLX[xP−1, yP+nPSH−1] == predFlagLX[xN, yN]
- PartMode of the current prediction unit is PART_NxN and PartIdx is equal to 3 and the prediction units covering luma location (xP−1, yP) (PartIdx = 2) and luma location (xP−1, yP−1) (PartIdx = 0) have identical motion parameters:
  - mvLX[xP−1, yP] == mvLX[xP−1, yP−1]
  - refIdxLX[xP−1, yP] == refIdxLX[xP−1, yP−1]
  - predFlagLX[xP−1, yP] == predFlagLX[xP−1, yP−1]

  and the prediction units covering luma location (xP, yP−1) (PartIdx = 1) and luma location (xN, yN) (Cand. N) have identical motion parameters:
  - mvLX[xP, yP−1] == mvLX[xN, yN]
  - refIdxLX[xP, yP−1] == refIdxLX[xN, yN]
  - predFlagLX[xP, yP−1] == predFlagLX[xN, yN]

Amazon.com, Inc., Amazon.com Services LLC - Ex. 1017, Page 000373

- PartMode of the current prediction unit is PART_NxN and PartIdx is equal to 3 and the prediction units covering luma location (xP, yP−1) (PartIdx = 1) and luma location (xP−1, yP−1) (PartIdx = 0) have identical motion parameters:
  - mvLX[xP, yP−1] == mvLX[xP−1, yP−1]
  - refIdxLX[xP, yP−1] == refIdxLX[xP−1, yP−1]
  - predFlagLX[xP, yP−1] == predFlagLX[xP−1, yP−1]

  and the prediction units covering luma location (xP−1, yP) (PartIdx = 2) and luma location (xN, yN) (Cand. N) have identical motion parameters:
  - mvLX[xP−1, yP] == mvLX[xN, yN]
  - refIdxLX[xP−1, yP] == refIdxLX[xN, yN]
  - predFlagLX[xP−1, yP] == predFlagLX[xN, yN]
- Otherwise, availableFlagN is set equal to 1 and the variables mvLX[xN, yN], refIdxLX[xN, yN] and predFlagLX[xN, yN] of the prediction unit covering luma location (xN, yN) are assigned respectively to mvLXN, refIdxLXN and predFlagLXN.

For the motion vector predictor candidate list generation process, each list candidate can include more information than the motion vector value, such as the reference lists used, the reference frames used in each list and motion vector for each list.

When all motion vector candidates have been examined, one motion vector is selected to be used as the motion vector for the current block. The motion vector selector 364 may examine different motion vectors in the list and determine which motion vector provides the most efficient encoding result, or the selection of the motion vector may be based on to other criteria as well. Information of the selected motion vector is provided for the mode selector for encoding and transmission to the decoder or for storage when the mode selector determines to use inter prediction for the current block. The information may include the index of the motion vector in the list, and/or motion vector parameters or other appropriate information.

The selected motion vector and the block relating to the motion vector is used to generate the prediction representation of the image block 312 which is provided as the output of the mode selector. The output may be used by the first summing device 321 to produce the first prediction error signal 320, as was described above.

The selected motion vector predictor candidate can be modified by adding a motion vector difference or can be used directly as the motion vector of the block. Moreover, after the motion compensation is performed by using the selected motion vector predictor candidate, the residual signal of the block can be transform coded or skipped to be coded.

Although the embodiments above have been described with respect to the size of the macroblock being 16x16 pixels, it would be appreciated that the methods and apparatus described may be configured to handle macroblocks of different pixel sizes.

Amazon.com, Inc., Amazon.com Services LLC - Ex. 1017, Page 000374

In the following the operation of an example embodiment of the decoder 600 is depicted in more detail with reference to Figure 7.

At the decoder side similar operations are performed to reconstruct the image blocks. Figure 7 shows a block diagram of a video decoder 700 suitable for employing embodiments of the invention and Figures 8a and 8b show a flow diagram of an example of a method in the video decoder. The bitstream to be decoded may be received from the encoder, from a network element, from a storage medium or from another source. The decoder is aware of the structure of the bitstream so that it can determine the meaning of the entropy coded codewords and may decode the bitstream by an entropy decoder 701 which performs entropy decoding on the received signal. The entropy decoder thus performs the inverse operation to the entropy encoder 330 of the encoder described above. The entropy decoder 701 outputs the results of the entropy decoding to a prediction error decoder 702 and a pixel predictor 704.

In some embodiments the entropy coding may not be used but another channel encoding may be in use, or the encoded bitstream may be provided to the decoder 700 without channel encoding. The decoder 700 may comprise a corresponding channel decoder to obtain the encoded codewords from the received signal.

The pixel predictor 704 receives the output of the entropy decoder 701. The output of the entropy decoder 701 may include an indication on the prediction mode used in encoding the current block. A predictor selector 714 within the pixel predictor 704 determines that an intra-prediction or an inter-prediction is to be carried out. The predictor selector 714 may furthermore output a predicted representation of an image block 716 to a first combiner 713. The predicted representation of the image block 716 is used in conjunction with the reconstructed prediction error signal 712 to generate a preliminary reconstructed image 718. The preliminary reconstructed image 718 may be used in the predictor 714 or may be passed to a filter 720. The filter 720, if used, applies a filtering which outputs a final reconstructed signal 722. The final reconstructed signal 722 may be stored in a reference frame memory 724, the reference frame memory 724 further being connected to the predictor 714 for prediction operations.

Also the prediction error decoder 702 receives the output of the entropy decoder 701. A dequantizer 792 of the prediction error decoder 702 may dequantize the output of the entropy decoder 701 and the inverse transform block 793 may perform an inverse transform operation to the dequantized signal output by the dequantizer 792. The output of the entropy decoder 701 may also indicate that prediction error signal is not to be applied and in this case the prediction error decoder produces an all zero output signal.

The decoder selects the 16x16 pixel residual macroblock to reconstruct. This residual macroblock is also called as a current block.

The decoder may receive information on the encoding mode used in encoding of the current block. The indication is decoded, when necessary, and provided to the reconstruction processor 791 of the prediction selector 714. The reconstruction processor 791 examines the indication and selects one of the intra-prediction mode(s), if the indication indicates that the block has been encoded using intra-

Amazon.com, Inc., Amazon.com Services LLC - Ex. 1017, Page 000375

prediction, or the inter-prediction mode, if the indication indicates that the block has been encoded using inter-prediction.

For inter-prediction mode the reconstruction processor 791 may comprise one or more elements corresponding to the prediction processor 362 of the encoder, such as a motion vector definer, a prediction list modifier and/or a motion vector selector.

The reconstruction processor 791 initializes a motion vector prediction list to default values in block 800. As was the case in the encoding part, in this example the spatial motion prediction candidates are the spatial neighbour blocks A0, A1, B0, B1, B2 and these spatial motion prediction candidates are processed in the same predetermined order than in the encoder: A1, B1, B0, A0 and B2. The first spatial motion prediction candidate to be selected for further examination is thus A1. Before further examination is performed for the selected spatial motion prediction candidate, it is examined whether the merge list already contains a maximum number of spatial motion prediction candidates. If the number of spatial motion prediction candidates in the merge list is not less than the maximum number, the selected spatial motion prediction candidate is not included in the merge list and the process of constructing the merge list can be stopped 826. On the other hand, if the number of spatial motion prediction candidates in the merge list is less than the maximum number, a further analyses of the selected spatial motion prediction candidate is performed (blocks 804-822).

The decoder examines 804 if the prediction unit or block covering the spatial motion prediction candidate block is not available for motion prediction. If so, the candidate is not included in the merge list. The reason that the block is not available may be that the block is either coded in intra mode or resides in a different slice or outside of the picture area.

In addition to the common conditions above, for each spatial motion prediction candidate, if any of the following conditions holds, then the candidate is not included in the merge list, otherwise, it is included.

The decoder determines 806 which spatial motion prediction candidate of the set of spatial motion prediction candidates is in question. If the spatial motion prediction candidate is the block A1, one or more of the following conditions may be examined 808, 810 to determine whether to include this spatial motion prediction candidate in the merge list or not. If the current coding unit 100 is vertically split into two rectangle prediction units 103, 104 as depicted in Figure 10b and the current prediction unit is the second prediction unit 104 in the coding/decoding order (808), this spatial motion prediction candidate is not included in the merge list. If the current coding unit 100 is not vertically split into two rectangle prediction units but it is horizontally split into two rectangle prediction units 101, 102 as depicted in Figure 10a and the current prediction unit is the second prediction unit in the coding/decoding order and the block A1 has the same motion information as the block B1 (810), this spatial motion prediction candidate (block A1) is not included in the merge list. In the example of Figure 10a the second prediction unit is the lower prediction unit 102 of the coding unit 100 and in the example of Figure 10b the second prediction unit is the rightmost prediction unit 104 of the coding unit 100. If none of the conditions above is fulfilled the block A1 is included in the merge list as a spatial motion prediction candidate (824).

Amazon.com, Inc., Amazon.com Services LLC - Ex. 1017, Page 000376

If the spatial motion prediction candidate is the block B1, one or more of the following conditions may be examined 812, 814 to determine whether to include this spatial motion prediction candidate in the merge list or not. If the current coding unit 100 is horizontally split into two rectangle prediction units 101, 102 as depicted in Figure 10a and the current prediction unit is the second prediction unit 104 in the coding/decoding order (812), this spatial motion prediction candidate is not included in the merge list. If the current coding unit 100 is not horizontally split into two rectangle prediction units and if the block B1 has the same motion information than the block A1 (814), this spatial motion prediction candidate (block B1) is not included in the merge list. If none of the conditions above is fulfilled the block B1 is included in the merge list as a spatial motion prediction candidate (824).

If the spatial motion prediction candidate is the block B0, this spatial motion prediction candidate is not included in the merge list if the block B0 has the same motion information than the block B1 (816). Otherwise, if the number of spatial motion prediction candidates in the merge list is less than the maximum number of spatial motion prediction candidates, this spatial motion prediction candidate (block B0) is included in the merge list (824).

If the spatial motion prediction candidate is the block A0, this spatial motion prediction candidate is not included in the merge list if the block A0 has the same motion information than the block A1 (818). Otherwise, if the number of spatial motion prediction candidates in the merge list is less than the maximum number of spatial motion prediction candidates, this spatial motion prediction candidate (block A0) is included in the merge list (824).

If the spatial motion prediction candidate is the block B2, this spatial motion prediction candidate is not included in the merge list if the maximum number of spatial motion prediction candidates is four and the other blocks A0, A1, B0, and B1 are all decided to be included in the merge list (820). Otherwise, if the number of spatial motion prediction candidates in the merge list is less than the maximum number of spatial motion prediction candidates, the block B2 is not included in the merge list if the block B2 has the same motion information than the block B1 or the block A1 (822).

Then, after processing the blocks A1, B1, B0, A0 and B2 and including a subset of them in the merge list based on the above described conditions, no more redundancy check between these candidates are performed and remaining temporal motion prediction candidate and/or other possible additional candidates may be processed.

When the merge list has been constructed the decoder may use 828 the indication of the motion vector received from the encoder to select the motion vector for decoding the current block. The indication may be, for example, an index to the merge list.

Basically, after the reconstruction processor 791 has constructed the merge list, it would correspond with the merge list constructed by the encoder if the reconstruction processor 791 has the same information available than the encoder had. If some information has been lost during transmission the information from the encoder to the decoder, it may affect the generation of the merge list in the decoder 700.

Amazon.com, Inc., Amazon.com Services LLC - Ex. 1017, Page 000377

The above examples describe the operation mainly in the merge mode but the encoder and decoder may also operate in other modes.

The embodiments of the invention described above describe the codec in terms of separate encoder and decoder apparatus in order to assist the understanding of the processes involved. However, it would be appreciated that the apparatus, structures and operations may be implemented as a single encoder-decoder apparatus/structure/operation. Furthermore in some embodiments of the invention the coder and decoder may share some or all common elements.

Although the above examples describe embodiments of the invention operating within a codec within an electronic device, it would be appreciated that the invention as described below may be implemented as part of any video codec. Thus, for example, embodiments of the invention may be implemented in a video codec which may implement video coding over fixed or wired communication paths.

Thus, user equipment may comprise a video codec such as those described in embodiments of the invention above.

It shall be appreciated that the term user equipment is intended to cover any suitable type of wireless user equipment, such as mobile telephones, portable data processing devices or portable web browsers.

Furthermore elements of a public land mobile network (PLMN) may also comprise video codecs as described above.

In general, the various embodiments of the invention may be implemented in hardware or special purpose circuits, software, logic or any combination thereof. For example, some aspects may be implemented in hardware, while other aspects may be implemented in firmware or software which may be executed by a controller, microprocessor or other computing device, although the invention is not limited thereto. While various aspects of the invention may be illustrated and described as block diagrams, flow charts, or using some other pictorial representation, it is well understood that these blocks, apparatus, systems, techniques or methods described herein may be implemented in, as non-limiting examples, hardware, software, firmware, special purpose circuits or logic, general purpose hardware or controller or other computing devices, or some combination thereof.

The embodiments of this invention may be implemented by computer software executable by a data processor of the mobile device, such as in the processor entity, or by hardware, or by a combination of software and hardware. Further in this regard it should be noted that any blocks of the logic flow as in the Figures may represent program steps, or interconnected logic circuits, blocks and functions, or a combination of program steps and logic circuits, blocks and functions. The software may be stored on such physical media as memory chips, or memory blocks implemented within the processor, magnetic media such as hard disk or floppy disks, and optical media such as for example DVD and the data variants thereof, CD.

The memory may be of any type suitable to the local technical environment and may be implemented using any suitable data storage technology, such as semiconductor based memory devices, magnetic memory devices and systems, optical memory devices and systems, fixed memory and

Amazon.com, Inc., Amazon.com Services LLC - Ex. 1017, Page 000378

removable memory. The data processors may be of any type suitable to the local technical environment, and may include one or more of general purpose computers, special purpose computers, microprocessors, digital signal processors (DSPs) and processors based on multi core processor architecture, as non limiting examples.

Embodiments of the inventions may be practiced in various components such as integrated circuit modules. The design of integrated circuits is by and large a highly automated process. Complex and powerful software tools are available for converting a logic level design into a semiconductor circuit design ready to be etched and formed on a semiconductor substrate.

Programs, such as those provided by Synopsys, Inc. of Mountain View, California and Cadence Design, of San Jose, California automatically route conductors and locate components on a semiconductor chip using well established rules of design as well as libraries of pre stored design modules. Once the design for a semiconductor circuit has been completed, the resultant design, in a standardized electronic format (e.g., Opus, GDSII, or the like) may be transmitted to a semiconductor fabrication facility or "fab" for fabrication.

The foregoing description has provided by way of exemplary and non-limiting examples a full and informative description of the exemplary embodiment of this invention. However, various modifications and adaptations may become apparent to those skilled in the relevant arts in view of the foregoing description, when read in conjunction with the accompanying drawings and the appended claims. ~~However, all such and similar modifications of the teachings of this invention will still fall within the scope of this invention~~.

~~In the following some examples will be provided.~~

~~In some embodiments a method comprises~~:

~~receiving a block of pixels including a prediction unit; determining a set of spatial motion vector prediction candidates for the block of pixels; the spatial motion vector prediction candidates being provided with motion information~~;

~~selecting a first spatial motion vector prediction candidate from the set of spatial motion vector prediction candidates as a potential spatial motion vector prediction candidate to be included in a merge list for the prediction unit~~;

~~determining a subset of spatial motion vector predictions based on the location of the block associated with the first spatial motion vector prediction candidate~~;

~~comparing motion information of the first spatial motion vector prediction candidate with motion information of the spatial motion vector prediction candidate in the determined subset of spatial motion vector prediction candidates~~;

~~if at least one of the comparisons indicates that the motion vector information of the spatial motion vector prediction candidates correspond with each other, excluding the first spatial motion vector prediction candidate from the merge list~~.

~~In some embodiments the method comprises including neighbouring blocks of the received block of pixels in the set of spatial motion vector prediction candidates~~.

Amazon.com, Inc., Amazon.com Services LLC - Ex. 1017, Page 000379

Claims:

1. A method comprising:

receiving a block (900) of pixels including a prediction unit;

determining for the block (900) of pixels a set of spatial motion vector prediction candidates located below-left (901), left (902), above-left (905), above (904) and above-right (903) of the prediction unit; the spatial motion vector prediction candidates being provided with motion information comprising at least a motion vector and a reference index;

determining a subset of spatial motion vector prediction candidate pairs among existing spatial motion vector prediction candidate pairs for comparison among all available spatial motion vector prediction candidate pairs in the set of spatial motion vector prediction candidates;

selecting a spatial motion vector prediction candidate from the set of spatial motion vector prediction candidates as a potential spatial motion vector prediction candidate to be included in a merge list for the prediction unit;

examining the subset of spatial motion vector prediction candidate pairs to determine which other spatial motion vector prediction candidate is defined to belong to the same spatial motion vector prediction candidate pair than the selected spatial motion vector prediction candidate (610);

comparing motion information of the selected spatial motion vector prediction candidate with motion information of the other spatial motion vector prediction candidate;

if the comparison indicates that the motion vector information of the other spatial motion vector prediction candidate corresponds with the motion vector information of the selected spatial motion vector prediction candidate, excluding the selected spatial motion vector prediction candidate from the merge list;

wherein the method further comprises selecting one motion vector prediction candidate from the merge list to represent a motion vector prediction for the block of pixels;

~~characterised in that the method further comprises:~~

determining a maximum number of spatial motion vector prediction candidates to be included in a merge list;

limiting the number of spatial motion vector prediction candidates in the merge list smaller than or equal to the maximum number;

if the number of spatial motion vector prediction candidates in the merge list is smaller than the maximum number, examining whether a prediction unit to which the potential spatial motion vector prediction candidate belongs is available for motion prediction;

if so, performing at least one of the following:

if the potential spatial motion vector prediction candidate (902) is located on the left side of the prediction unit, excluding the potential spatial motion vector prediction candidate (902) from the merge list if any of the following conditions are fulfilled:

Amazon.com, Inc., Amazon.com Services LLC - Ex. 1017, Page 000380

– the received block of pixels is vertically divided into a first prediction unit and a second prediction unit, and the prediction unit is the second prediction unit in coding order;

– the received block of pixels is horizontally divided into a first prediction unit and a second prediction unit, and if the prediction unit is the second prediction unit in coding order, and the potential spatial motion vector prediction candidate (902) has the same motion vectors and the same reference indices than the spatial motion vector prediction candidate (904) above the prediction unit;

if the potential spatial motion vector prediction candidate (904) is located above the prediction unit, excluding the potential spatial motion vector prediction candidate (904) from the merge list if any of the following conditions are fulfilled:

– the received block of pixels is horizontally divided into a first prediction unit and a second prediction unit, and the prediction unit is the second prediction unit in coding order;

– the potential spatial motion vector prediction candidate (904) has the same motion vectors and the same reference indices than the spatial motion vector prediction candidate (902) on the left side of the prediction unit;

if the potential spatial motion vector prediction candidate (903) is located on the right side of the ~~potential~~ spatial motion vector prediction candidate (904) above the prediction unit, excluding the potential spatial motion vector prediction candidate (903) from the merge list if the potential spatial motion vector prediction candidate (903) has the same motion vectors and the same reference indices than the spatial motion vector prediction candidate (904) above the prediction unit;

if the potential spatial motion vector prediction candidate (901) is located below the ~~potential~~ spatial motion vector prediction candidate (902) on the left side of the prediction unit, excluding the potential spatial motion vector prediction candidate (901) from the merge list if the potential spatial motion vector prediction candidate (901) has the same motion vectors and the same reference indices than the spatial motion vector prediction candidate (902) on the left side of the prediction unit;

if the potential spatial motion vector prediction candidate (905) is cornerwise above-left neighbouring the prediction unit, excluding the potential spatial motion vector prediction candidate (905) from the merge list if any of the following conditions are fulfilled:

– all the other ~~potential~~ spatial motion vector prediction candidates (901—904) have been included in the merge list;

– the potential spatial motion vector prediction candidate (905) has the same motion vectors and the same reference indices than the spatial motion vector prediction candidate (904) above the prediction unit;

Amazon.com, Inc., Amazon.com Services LLC - Ex. 1017, Page 000381

– the potential spatial motion vector prediction candidate (905) has the same motion vectors and the same reference indices than the spatial motion vector prediction candidate (902) on the left side of the prediction unit.

2. The method according to claim 1 comprising selecting spatial motion vector prediction candidates from the set of spatial motion vector prediction candidates as the potential spatial motion vector prediction candidate in a predetermined order.

3. The method according to claim 1 or 2, comprising comparing motion information of the potential spatial motion vector prediction candidate with motion information of at most one other spatial motion vector prediction candidate of the set of spatial motion vector prediction candidates.

4. The method according to any of the claims 1 to 3 comprising examining whether the received block of pixels is divided into a first prediction unit and a second prediction unit in coding order; and if so, excluding the potential spatial motion vector prediction candidate from the merge list if the prediction unit is the second prediction unit.

5. The method according to any of the claims 1 to 4 further comprising including a temporal motion prediction candidate into the merge list.

6. A method comprising:

receiving an encoded block of pixels including a prediction unit;

determining for the encoded block (900) of pixels a set of spatial motion vector prediction candidates located below-left (901), left (902), above-left (905), above (904) and above-right (903) of the prediction unit; the spatial motion vector prediction candidates being provided with motion information comprising at least a motion vector and a reference index;

determining a subset of spatial motion vector prediction candidate pairs among existing spatial motion vector prediction candidate pairs for comparison among all available spatial motion vector prediction candidate pairs in the set of spatial motion vector prediction candidates;

selecting a spatial motion vector prediction candidate from the set of spatial motion vector prediction candidates as a potential spatial motion vector prediction candidate to be included in a merge list for the prediction unit;

examining the subset of spatial motion vector prediction candidate pairs to determine which other spatial motion vector prediction candidate is defined to belong to the same spatial motion vector prediction candidate pair than the selected spatial motion vector prediction candidate;

comparing motion information of the selected spatial motion vector prediction candidate with motion information of the other spatial motion vector prediction candidate;

Amazon.com, Inc., Amazon.com Services LLC - Ex. 1017, Page 000382

if the comparison indicates that the motion vector information of the other spatial motion vector prediction candidate corresponds with the motion vector information of the selected spatial motion vector prediction candidate, excluding the selected spatial motion vector prediction candidate from the merge list

wherein the method further comprises selecting one motion vector prediction candidate from the merge list to represent a motion vector prediction for the received encoded block of pixels;

~~characterised in that the method further comprises:~~

determining a maximum number of spatial motion vector prediction candidates to be included in a merge list;

limiting the number of spatial motion vector prediction candidates in the merge list smaller or equal to the maximum number;

if the number of spatial motion vector prediction candidates in the merge list smaller than the maximum number, examining whether a prediction unit to which the potential spatial motion vector prediction candidate belongs is available for motion prediction;

if so, performing at least one of the following:

if the potential spatial motion vector prediction candidate (902) is located on the left side of the prediction unit, excluding the potential spatial motion vector prediction candidate (902) from the merge list if any of the following conditions are fulfilled:

– the received encoded block of pixels is vertically divided into a first prediction unit and a second prediction unit, and the prediction unit is the second prediction unit;

– the received encoded block of pixels is horizontally divided into a first prediction unit and a second prediction unit, and if the prediction unit is the second prediction unit, and the potential spatial motion vector prediction candidate (902) has the same motion vectors and the same reference indices than the spatial motion vector prediction candidate (904) above the prediction unit;

if the potential spatial motion vector prediction candidate (904) is located above the prediction unit, excluding the potential spatial motion vector prediction candidate (904) from the merge list if any of the following conditions are fulfilled:

– the received encoded block of pixels is horizontally divided into a first prediction unit and a second prediction unit, and the prediction unit is the second prediction unit in decoding order;

– the potential spatial motion vector prediction candidate (904) has the same motion vectors and the same reference indices than the spatial motion vector prediction candidate (902) on the left side of the prediction unit;

if the potential spatial motion vector prediction candidate (903) is located on the right side of the ~~potential~~ spatial motion vector prediction candidate (904) above the prediction unit,

Amazon.com, Inc., Amazon.com Services LLC - Ex. 1017, Page 000383

excluding the potential spatial motion vector prediction candidate (903) from the merge list if the potential spatial motion vector prediction candidate has the same motion vectors and the same reference indices than the spatial motion vector prediction candidate (904) above the prediction unit;

if the potential spatial motion vector prediction candidate (901) is located below the ~~potential~~ spatial motion vector prediction candidate (902) on the left side of the prediction unit, excluding the potential spatial motion vector prediction candidate (901) from the merge list if the potential spatial motion vector prediction candidate (901) has the same motion vectors and the same reference indices than the spatial motion vector prediction candidate (902) on the left side of the prediction unit;

if the potential spatial motion vector prediction candidate (905) is cornerwise above-left neighbouring the prediction unit, excluding the potential spatial motion vector prediction candidate (905) from the merge list if any of the following conditions are fulfilled:

- all the other ~~potential~~ spatial motion vector prediction candidates (901—904) have been included in the merge list;
- the potential spatial motion vector prediction candidate (905) has the same motion vectors and the same reference indices than the spatial motion vector prediction candidate (904) above the prediction unit;
- the potential spatial motion vector prediction candidate (905) has the same motion vectors and the same reference indices than the spatial motion vector prediction candidate (902) on the left side of the prediction unit.

7. The method according to claim 6 comprising comparing motion information of the potential spatial motion vector prediction candidate with motion information of at most one other spatial motion vector prediction candidate of the set of spatial motion vector prediction candidates.

8. The method according to claim 6 or 7 comprising examining whether the received encoded block of pixels is divided into a first prediction unit and a second prediction unit in decoding order; and if so, excluding the potential spatial motion vector prediction candidate from the merge list if the prediction unit is the second prediction unit.

~~9. The method according to any of the claims 6 to 8 comprising selecting one motion vector prediction candidate from the merge list to represent a motion vector prediction for the received encoded block of pixels.~~

2 9. 2

~~10.~~ An apparatus comprising means for performing a method according to any one of claims 1 to 5.

Amazon.com, Inc., Amazon.com Services LLC - Ex. 1017, Page 000384

2 10. 2

~~11.~~ An apparatus comprising means for performing a method according to any one of claims 6 to 2 8 2 ~~9~~ .

2 11. 2 ~~12.~~ A computer-readable 2 storage medium 2 ~~media~~ having computer-readable instructions thereon which, when executed by one or more processors, cause one or more processors to perform a method of any one of claims 1 to 5.

2 12. 2 ~~13.~~ A computer-readable 2 storage medium 2 ~~media~~ having computer-readable instructions thereon which, when executed by one or more processors, cause one or more processors to perform a method of any one of claims 6 to 2 8 2 ~~9~~ .

Amazon.com, Inc., Amazon.com Services LLC - Ex. 1017, Page 000385

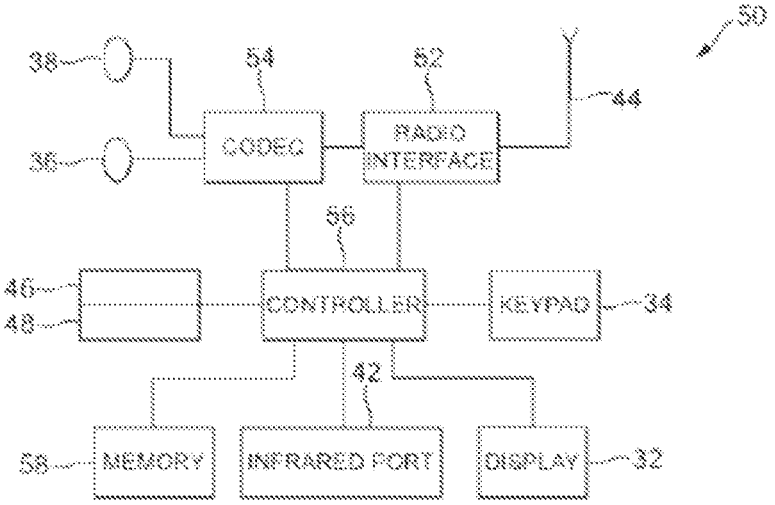
50
38
54
52
44
36
CODEC
RADIO INTERFACE
56
46
48
CONTROLLER
KEYPAD
34
42
58
MEMORY
INFRARED PORT
DISPLAY
32

FIG.1

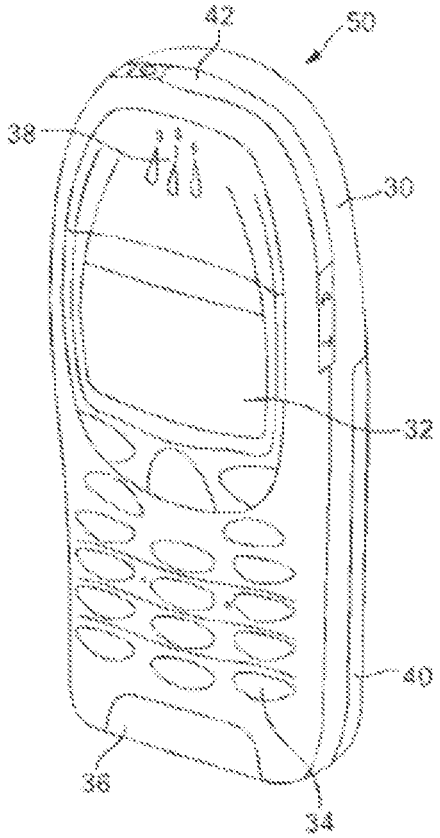
42
50
28
38
30
32
40
36
34

FIG. 2

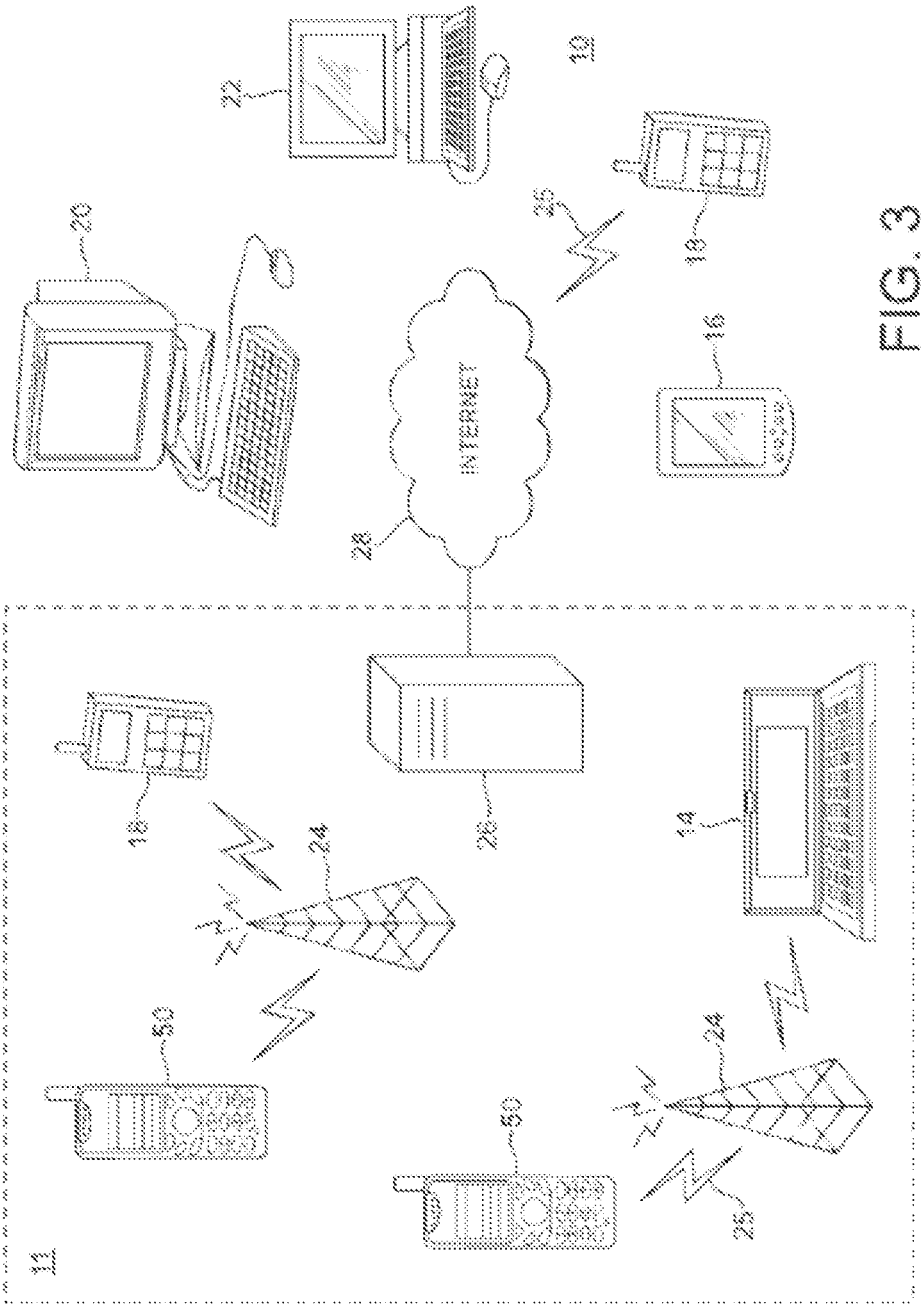

FIG. 3

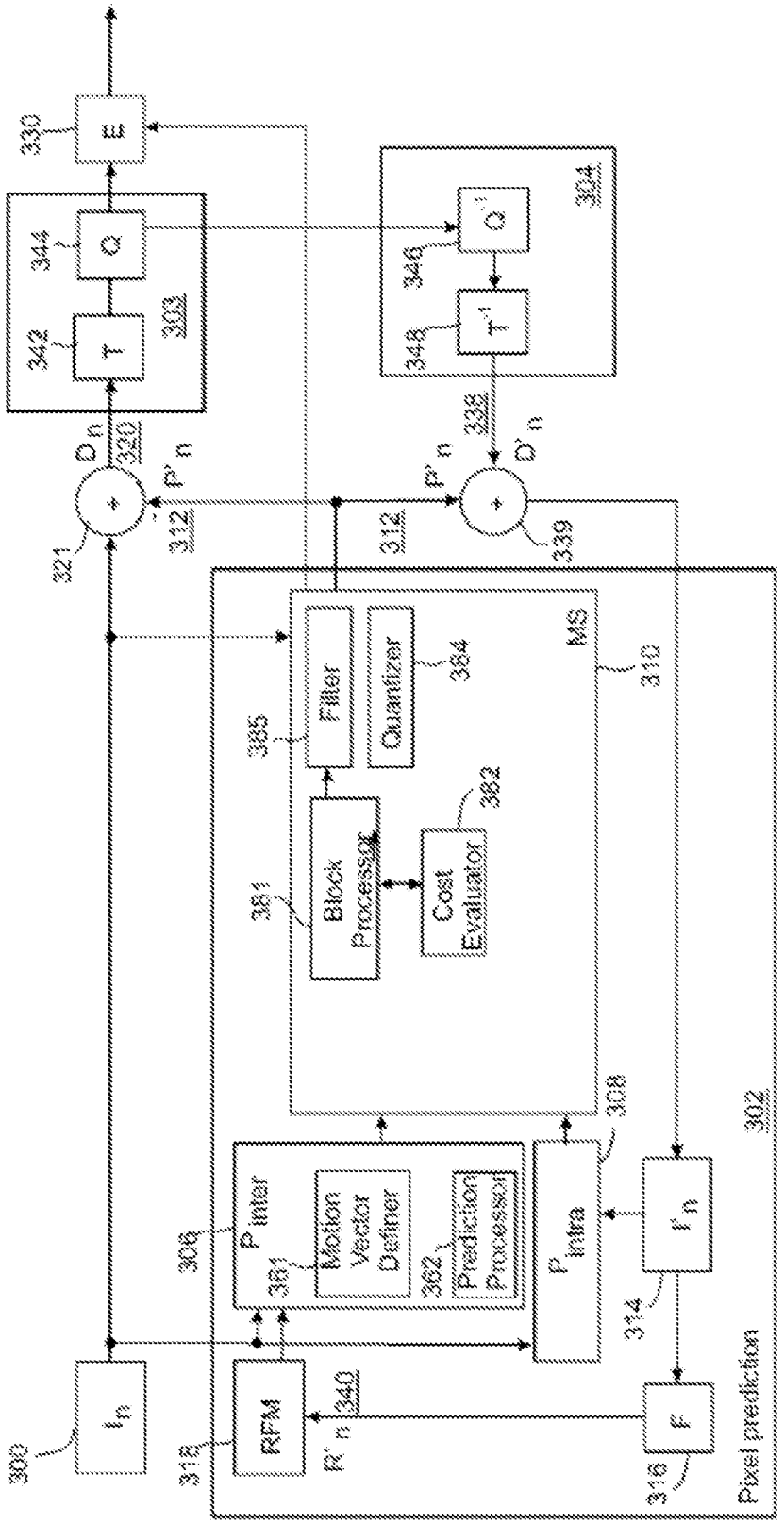
300
I_n
318
RFM
R'_n
340
306
P_{inter}
361
Motion Vector Definer
362
Prediction Processor
308
P_{intra}
314
I'_n
316
F
Pixel prediction
302
321
D_n
320
P'_n
312
342
T
344
Q
303
330
E
339
D'_n
338
348
T^{-1}
346
Q^{-1}
304
MS
310
381
Block Processor
382
Cost Evaluator
385
Filter
384
Quantizer

Fig. 4a

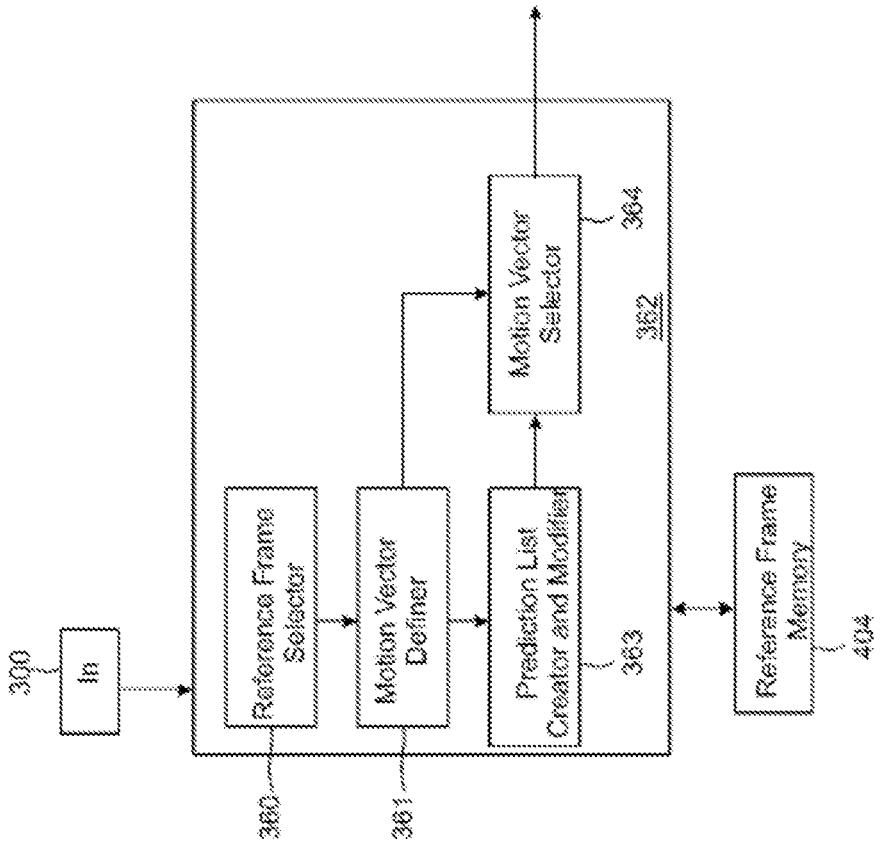
300
In
Reference Frame Selector
360
Motion Vector Definer
361
Prediction List Creator and Modifier
363
Motion Vector Selector
364
362
Reference Frame Memory
404

Fig. 4b

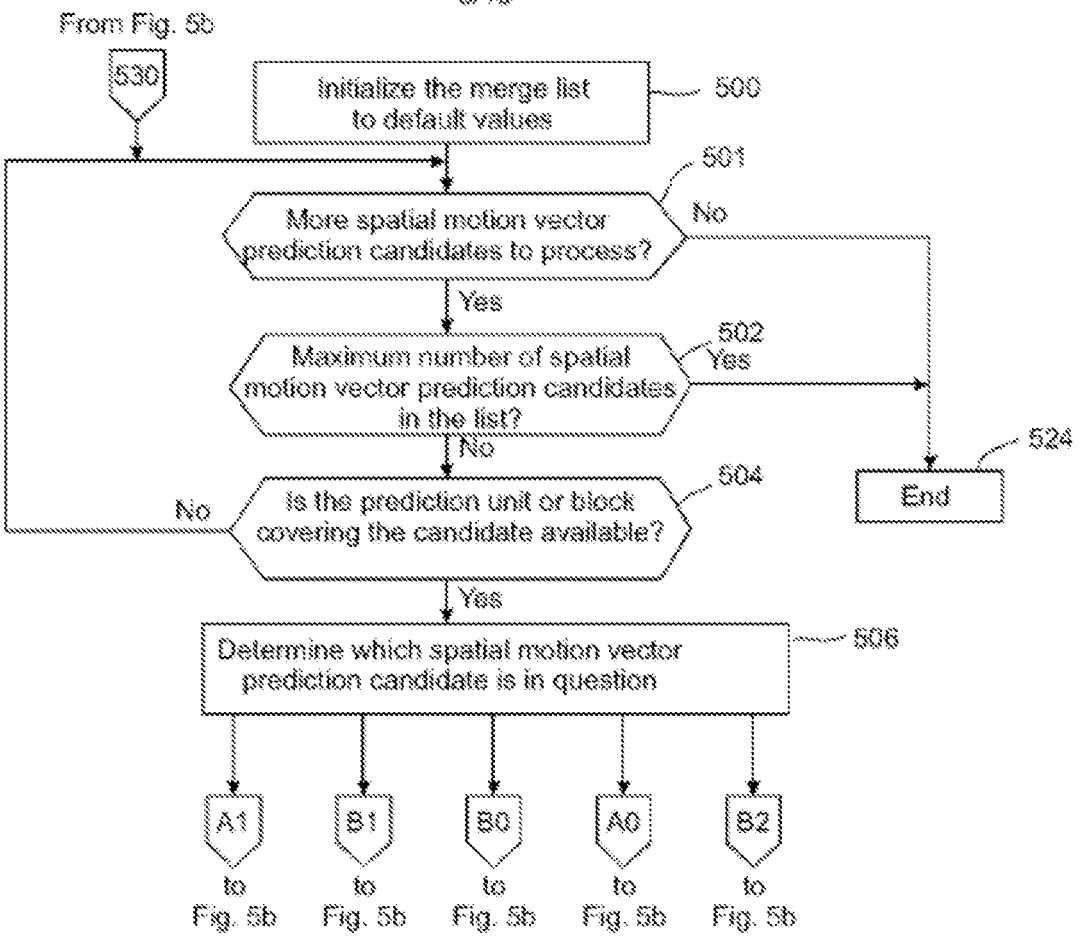
From Fig. 5b
530
Initialize the merge list to default values
500
501
More spatial motion vector prediction candidates to process?
No
Yes
502
Maximum number of spatial motion vector prediction candidates in the list?
Yes
No
524
End
504
Is the prediction unit or block covering the candidate available?
No
Yes
506
Determine which spatial motion vector prediction candidate is in question
A1
B1
B0
A0
B2
to Fig. 5b
to Fig. 5b
to Fig. 5b
to Fig. 5b
to Fig. 5b

Fig. 5a

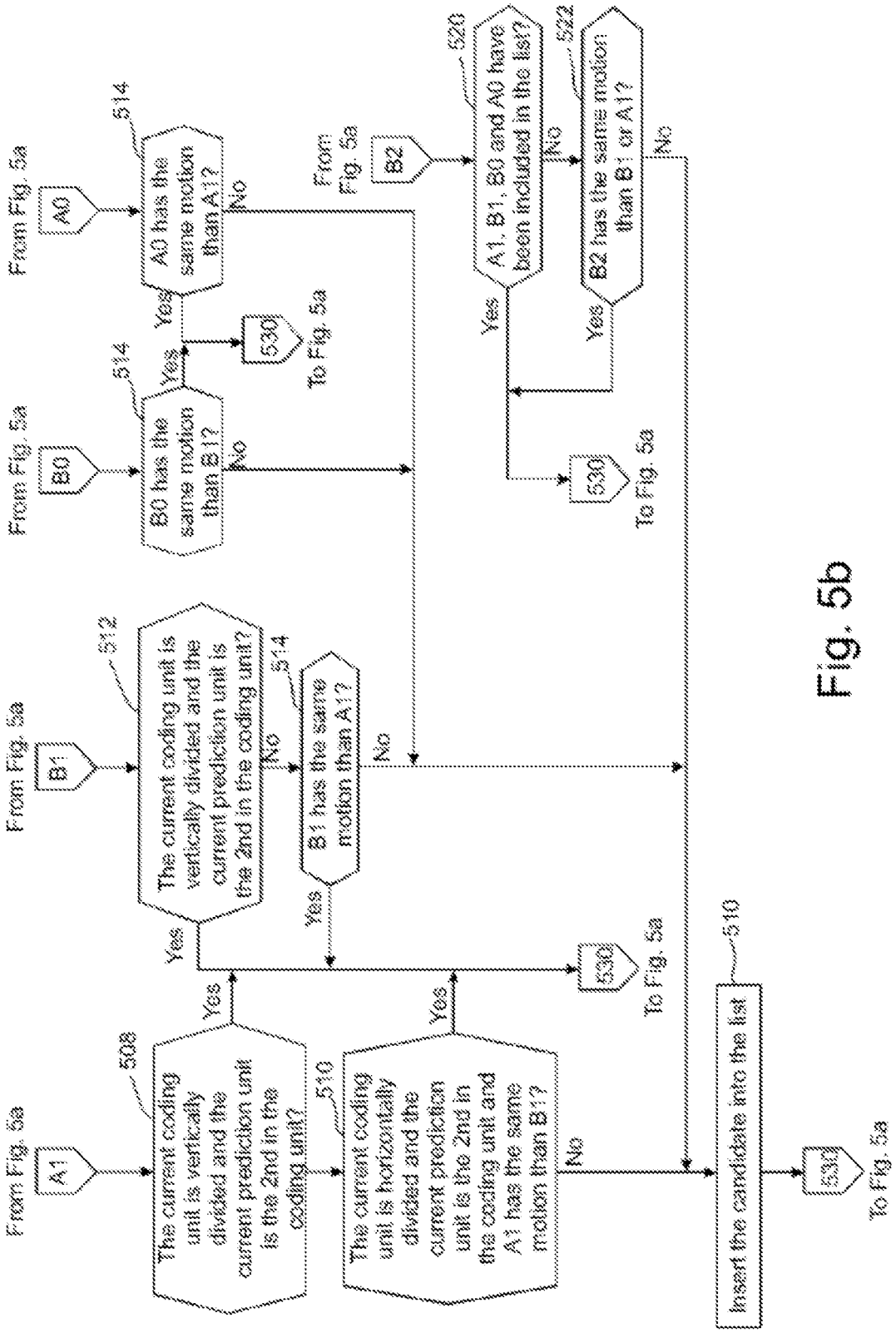
From Fig. 5a
A1
508
The current coding unit is vertically divided and the current prediction unit is the 2nd in the coding unit?
Yes
510
The current coding unit is horizontally divided and the current prediction unit is the 2nd in the coding unit and A1 has the same motion than B1?
Yes
No
From Fig. 5a
B1
512
The current coding unit is vertically divided and the current prediction unit is the 2nd in the coding unit?
Yes
No
514
B1 has the same motion than A1?
Yes
No
530
To Fig. 5a
From Fig. 5a
B0
514
B0 has the same motion than B1?
Yes
No
530
To Fig. 5a
From Fig. 5a
A0
514
A0 has the same motion than A1?
Yes
No
530
To Fig. 5a
From Fig. 5a
B2
520
A1, B1, B0 and A0 have been included in the list?
Yes
No
522
B2 has the same motion than B1 or A1?
Yes
No
530
To Fig. 5a
510
Insert the candidate into the list
530
To Fig. 5a

Fig. 5b

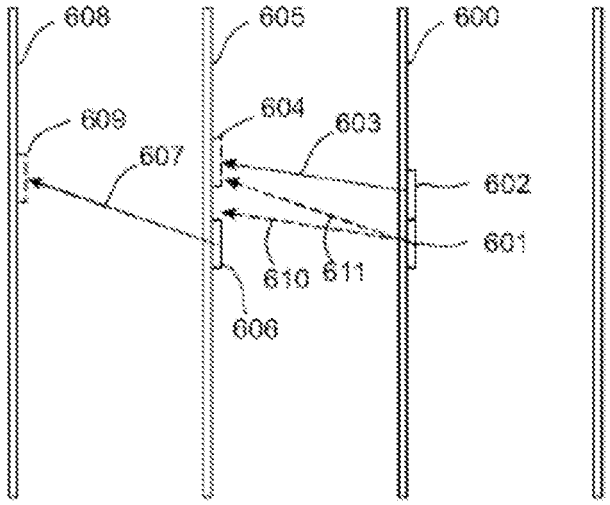
608
605
600
609
604
603
607
602
601
610
611
606

Fig. 6a

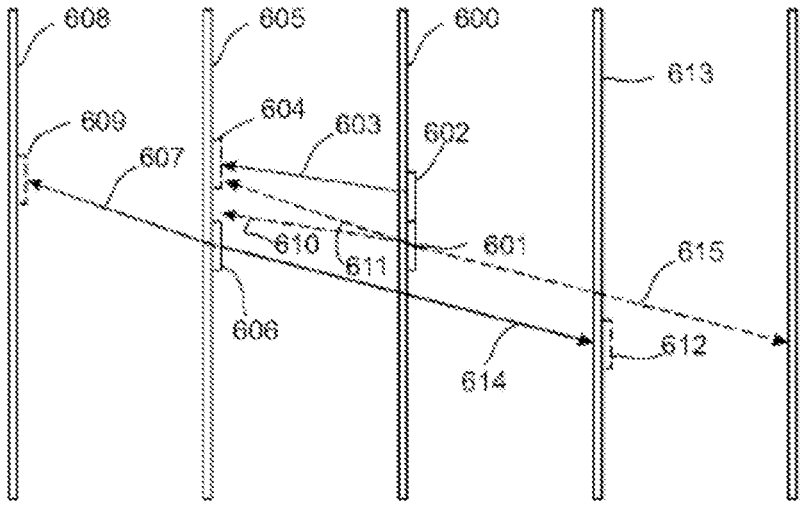
608
605
600
613
609
604
603
602
607
610
611
601
615
606
612
614

Fig. 6b

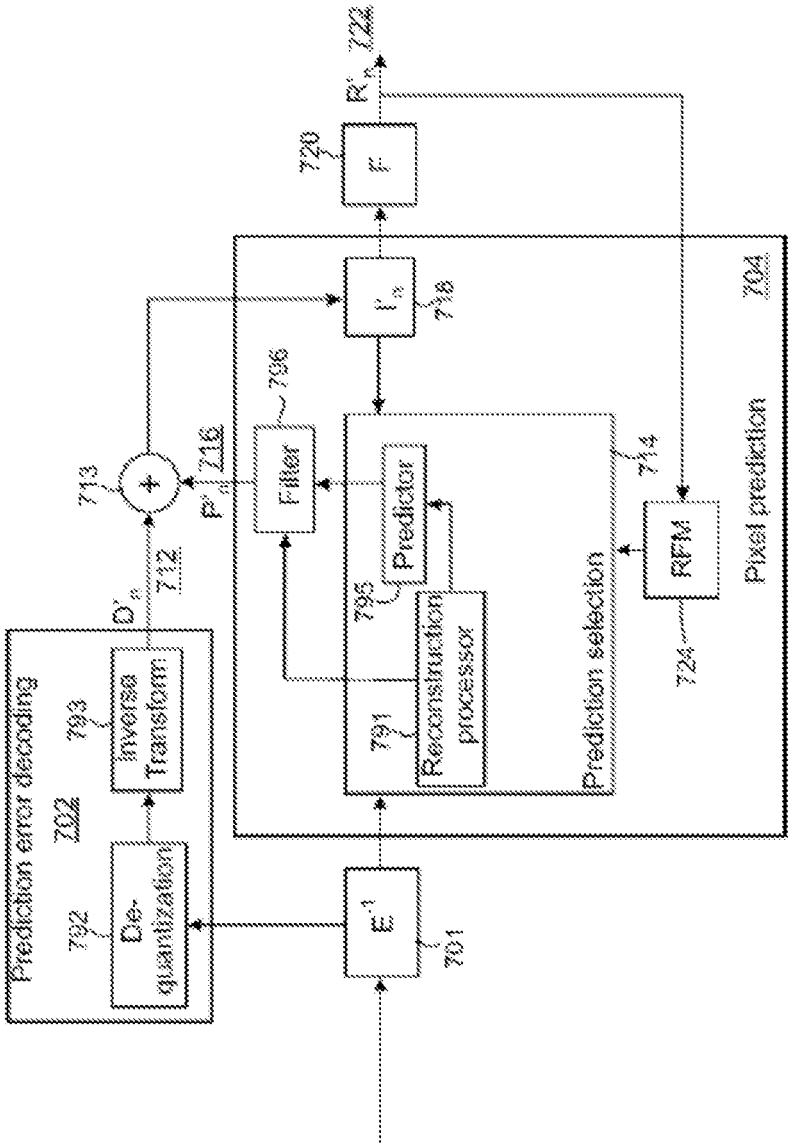
Prediction error decoding
702
792
De-quantization
793
Inverse Transform
D'_n
712
713
+
P'_n
716
796
Filter
E^{-1}
701
791
Reconstruction processor
795
Predictor
F'_n
718
Prediction selection
714
RFM
724
Pixel prediction
704
F
720
R'_n
722

Fig. 7

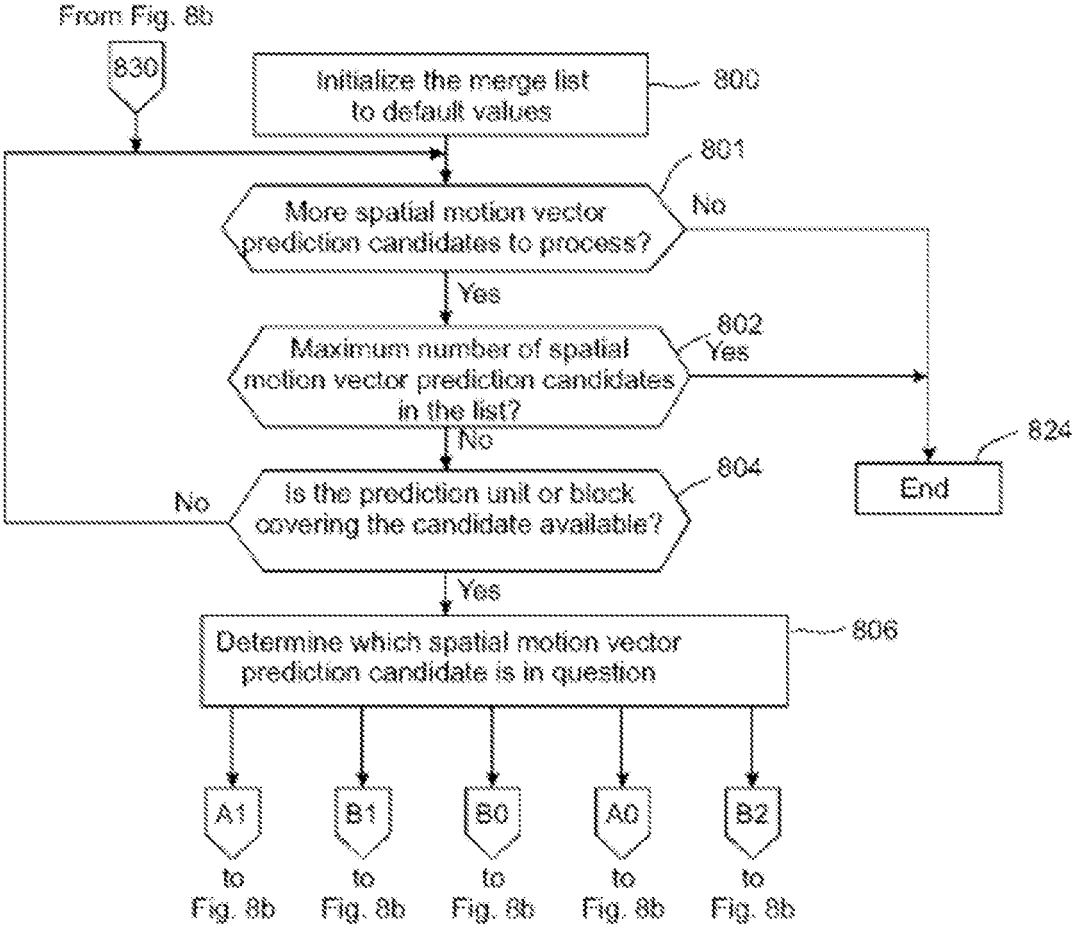
From Fig. 8b
830
Initialize the merge list to default values
800
801
More spatial motion vector prediction candidates to process?
No
Yes
802
Maximum number of spatial motion vector prediction candidates in the list?
Yes
No
824
End
804
Is the prediction unit or block covering the candidate available?
No
Yes
806
Determine which spatial motion vector prediction candidate is in question
A1
B1
B0
A0
B2
to Fig. 8b
to Fig. 8b
to Fig. 8b
to Fig. 8b
to Fig. 8b

Fig. 8a

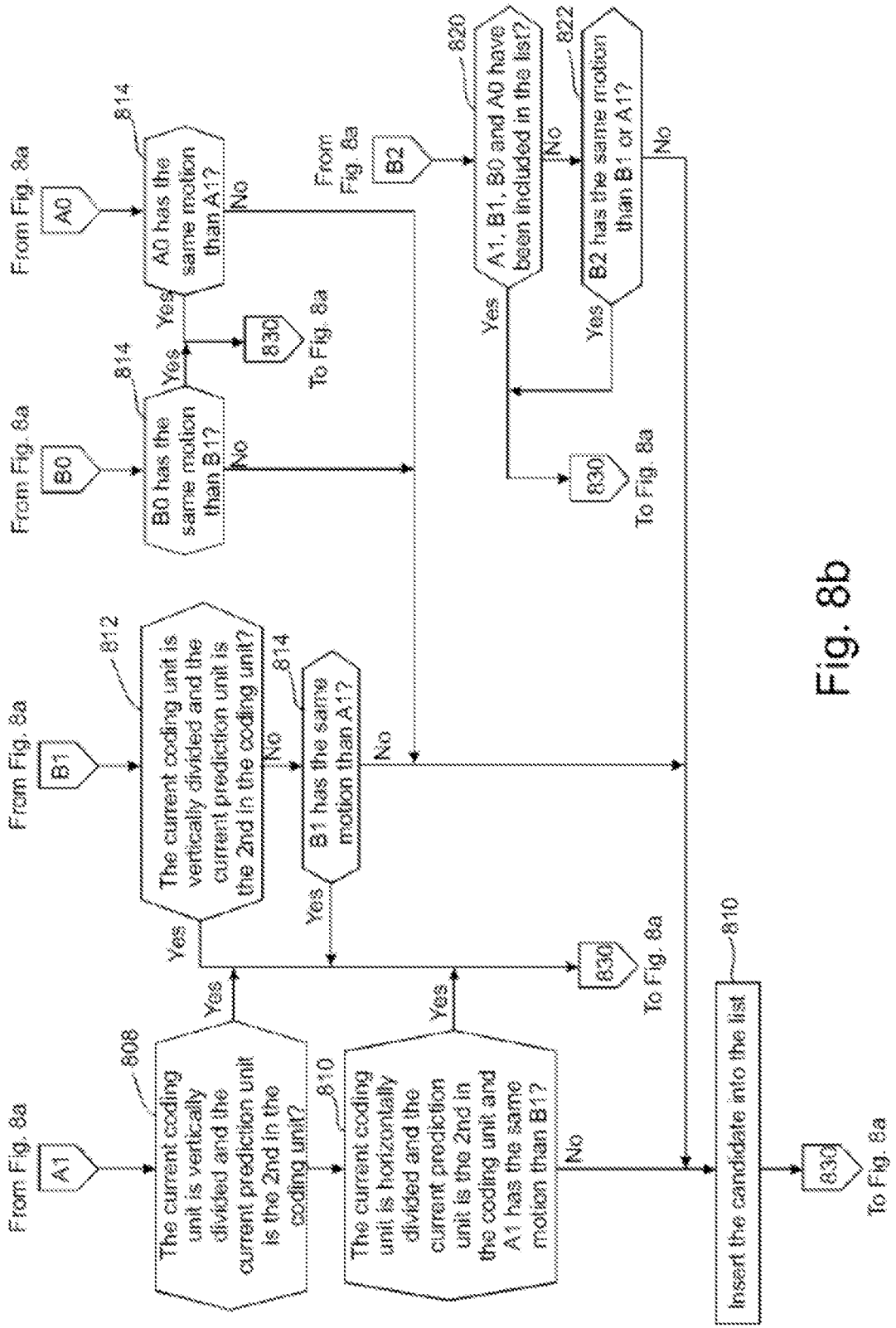
From Fig. 8a
A1
808
The current coding unit is vertically divided and the current prediction unit is the 2nd in the coding unit?
Yes
810
The current coding unit is horizontally divided and the current prediction unit is the 2nd in the coding unit and A1 has the same motion than B1?
Yes
No
From Fig. 8a
B1
812
The current coding unit is vertically divided and the current prediction unit is the 2nd in the coding unit?
Yes
No
814
B1 has the same motion than A1?
Yes
No
830
To Fig. 8a
From Fig. 8a
B0
814
B0 has the same motion than B1?
Yes
No
830
To Fig. 8a
From Fig. 8a
A0
814
A0 has the same motion than A1?
Yes
No
830
To Fig. 8a
From Fig. 8a
B2
820
A1, B1, B0 and A0 have been included in the list?
Yes
No
822
B2 has the same motion than B1 or A1?
Yes
No
830
To Fig. 8a
810
Insert the candidate into the list
830
To Fig. 8a

Fig. 8b

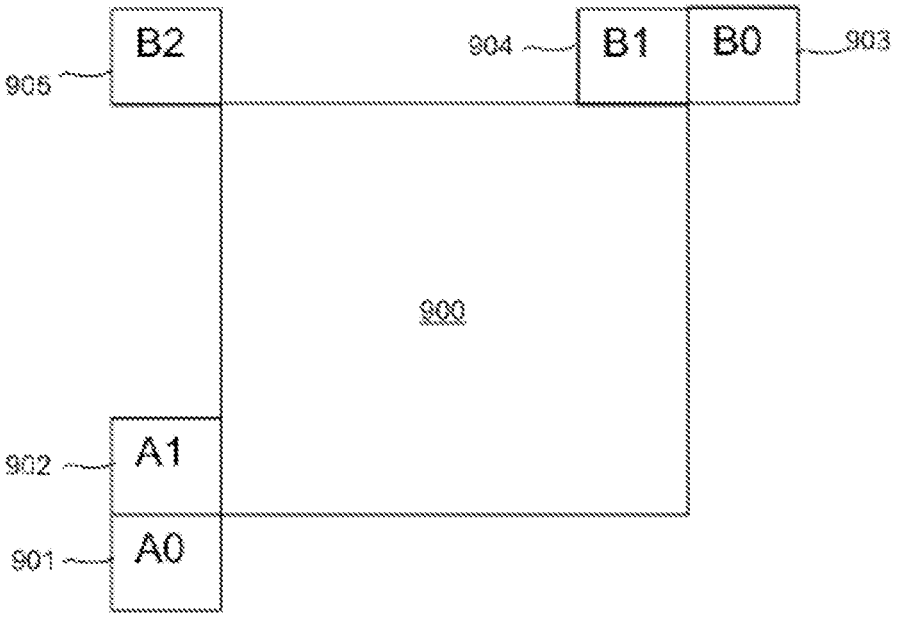

Fig. 9

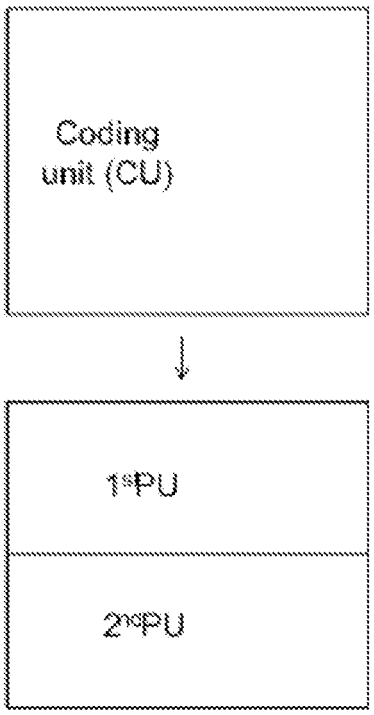

Fig. 10a

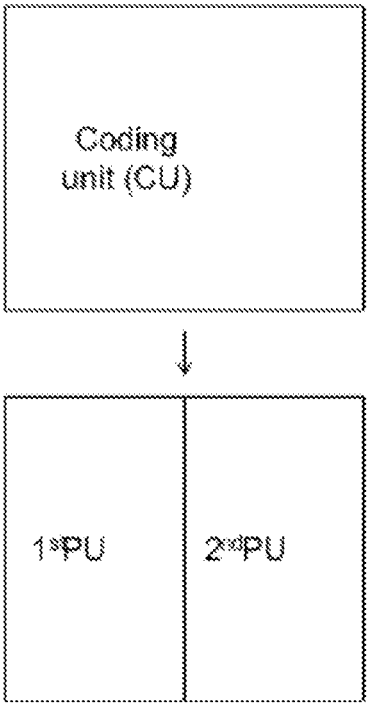

Fig. 10b

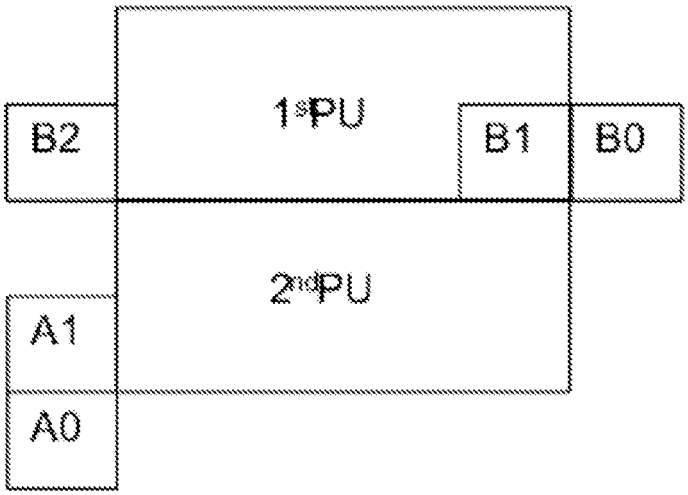

Fig. 11a

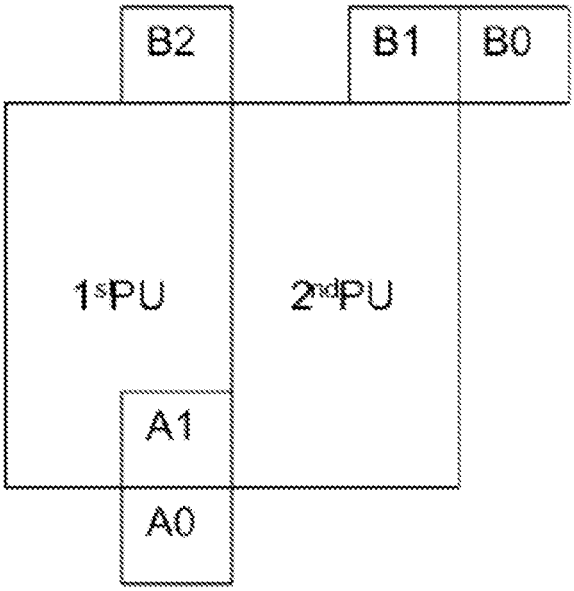

Fig. 11b

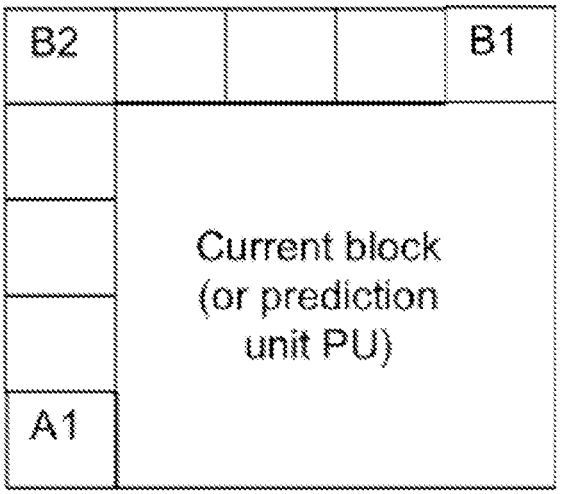

Fig. 12

METHOD FOR VIDEO CODING AND APPARATUS

TECHNICAL FIELD

There is provided a method for encoding, a method for decoding, an apparatus, computer program products, an encoder and a decoder.

BACKGROUND INFORMATION

This section is intended to provide a background or context to the invention that is recited in the claims. The description herein may include concepts that could be pursued, but are not necessarily ones that have been previously conceived or pursued. Therefore, unless otherwise indicated herein, what is described in this section is not prior art to the description and claims in this application and is not admitted to be prior art by inclusion in this section

A video codec may comprise an encoder which transforms input video into a compressed representation suitable for storage and/or transmission and a decoder that can uncompress the compressed video representation back into a viewable form, or either one of them. The encoder may discard some information in the original video sequence in order to represent the video in a more compact form, for example at a lower bit rate.

Many hybrid video codecs, operating for example according to the International Telecommunication Union's ITU-T H.263 and H.264 coding standards, encode video information in two phases. In the first phase, pixel values in a certain picture area or "block" are predicted. These pixel values can be predicted, for example, by motion compensation mechanisms, which involve finding and indicating an area in one of the previously encoded video frames (or a later coded video frame) that corresponds closely to the block being coded. Additionally, pixel values can be predicted by spatial mechanisms which involve finding and indicating a spatial region relationship, for example by using pixel values around the block to be coded in a specified manner.

Prediction approaches using image information from a previous (or a later) image can also be called as Inter prediction methods, and prediction approaches using image information within the same image can also be called as Intra prediction methods.

The second phase is one of coding the error between the predicted block of pixels and the original block of pixels. This may be accomplished by transforming the difference in pixel values using a specified transform. This transform may be e.g. a Discrete Cosine Transform (DCT) or a variant thereof. After transforming the difference, the transformed difference may be quantized and entropy encoded.

By varying the fidelity of the quantization process, the encoder can control the balance between the accuracy of the pixel representation, (in other words, the quality of the picture) and the size of the resulting encoded video representation (in other words, the file size or transmission bit rate).

The decoder reconstructs the output video by applying a prediction mechanism similar to that used by the encoder in order to form a predicted representation of the pixel blocks (using the motion or spatial information created by the encoder and stored in the compressed representation of the image) and

Amazon.com, Inc., Amazon.com Services LLC - Ex. 1017, Page 000399

prediction error decoding (the inverse operation of the prediction error coding to recover the quantized prediction error signal in the spatial domain).

After applying pixel prediction and error decoding processes the decoder combines the prediction and the prediction error signals (the pixel values) to form the output video frame.

The decoder (and encoder) may also apply additional filtering processes in order to improve the quality of the output video before passing it for display and/or storing as a prediction reference for the forthcoming frames in the video sequence.

In some video codecs, such as High Efficiency Video Coding Working Draft 4, video pictures may be divided into coding units (CU) covering the area of a picture. A coding unit consists of one or more prediction units (PU) defining the prediction process for the samples within the coding unit and one or more transform units (TU) defining the prediction error coding process for the samples in the coding unit. A coding unit may consist of a square block of samples with a size selectable from a predefined set of possible coding unit sizes. A coding unit with the maximum allowed size can be named as a largest coding unit (LCU) and the video picture may be divided into non-overlapping largest coding units. A largest coding unit can further be split into a combination of smaller coding units, e.g. by recursively splitting the largest coding unit and resultant coding units. Each resulting coding unit may have at least one prediction unit and at least one transform unit associated with it. Each prediction unit and transform unit can further be split into smaller prediction units and transform units in order to increase granularity of the prediction and prediction error coding processes, respectively. Each prediction unit may have prediction information associated with it defining what kind of a prediction is to be applied for the pixels within that prediction unit (e.g. motion vector information for inter predicted prediction units and intra prediction directionality information for intra predicted prediction units). Similarly, each transform unit may be associated with information describing the prediction error decoding process for samples within the transform unit (including e.g. discrete cosine transform (DCT) coefficient information). It may be signalled at coding unit level whether prediction error coding is applied or not for each coding unit. In the case there is no prediction error residual associated with the coding unit, it can be considered there are no transform units for the coding unit. The division of the image into coding units, and division of coding units into prediction units and transform units may be signalled in the bitstream allowing the decoder to reproduce the intended structure of these units.

In some video codecs, motion information is indicated by motion vectors associated with each motion compensated image block. These motion vectors represent the displacement of the image block in the picture to be coded (in the encoder) or decoded (at the decoder) and the prediction source block in one of the previously coded or decoded images (or pictures). In order to represent motion vectors efficiently, motion vectors may be coded differentially with respect to block specific predicted motion vector. In some video codecs, the predicted motion vectors are created in a predefined way, for example by calculating the median of the encoded or decoded motion vectors of the adjacent blocks.

Another way to create motion vector predictions is to generate a list or a set of candidate predictions from blocks in the current frame and/or co-located or other blocks in temporal reference

Amazon.com, Inc., Amazon.com Services LLC - Ex. 1017, Page 000400

pictures and signalling the chosen candidate as the motion vector prediction. A spatial motion vector prediction is a prediction obtained only on the basis of information of one or more blocks of the same frame than the current frame whereas temporal motion vector prediction is a prediction obtained on the basis of information of one or more blocks of a frame different from the current frame. It may also be possible to obtain motion vector predictions by combining both spatial and temporal prediction information of one or more encoded blocks. These kinds of motion vector predictions are called as spatio-temporal motion vector predictions.

In addition to predicting the motion vector values, the reference index in the reference picture list can be predicted. The reference index may be predicted from blocks in the current frame and/or co-located or other blocks in a temporal reference picture. Moreover, some high efficiency video codecs employ an additional motion information coding/decoding mechanism, often called merging/merge mode, where all the motion field information, which includes motion vector and corresponding reference picture index for each available reference picture list, may be predicted and used without any modification or correction. Similarly, predicting the motion field information may be carried out using the motion field information of blocks in the current frame and/or co-located or other blocks in temporal reference pictures and the used motion field information is signalled among a list of motion field candidate list filled with motion field information of available blocks in the current frame and/or co-located or other blocks in temporal reference pictures.

In some video codecs the prediction residual after motion compensation is first transformed with a transform kernel (like DCT) and then coded. The reason for this is that often there still exists some correlation among the residual and transform can in many cases help reduce this correlation and provide more efficient coding.

Some video encoders utilize Lagrangian cost functions to find optimal coding modes, e.g. the desired Macroblock mode and associated motion vectors. This kind of cost function uses a weighting factor λ to tie together the (exact or estimated) image distortion due to lossy coding methods and the (exact or estimated) amount of information that is required to represent the pixel values in an image area:

$$C = D + \lambda R \qquad (1)$$

where C is the Lagrangian cost to be minimized, D is the image distortion (e.g. Mean Squared Error) with the mode and motion vectors considered, and R the number of bits needed to represent the required data to reconstruct the image block in the decoder (including the amount of data to represent the candidate motion vectors).

Some video codecs such as hybrid video codecs may generate a list of motion vector predictions (MVP) consisting of motion vectors of spatial adjacent blocks (spatial MVP) and/or motion vectors of blocks in a previously decoded frame (temporal MVP). One of the candidate motion vectors in the list is signalled to be used as the motion vector prediction of the current block. After the list is generated, some of the motion vector prediction candidates may have the same motion information. In this case, the

Amazon.com, Inc., Amazon.com Services LLC - Ex. 1017, Page 000401

identical motion vector prediction candidates may be removed to reduce redundancy. During the decoding, if the temporal motion vector prediction information is unavailable due to e.g. loss of reference frame, the decoder may not know if the temporal motion vector prediction candidate in the list is to be removed. This may lead to uncertainty for mapping the decoded candidate index to the candidates whose removal decision is based on comparing motion information with the temporal motion vector prediction. As a result, false assignment of motion vector prediction candidates may occur which may lead to degradation in the picture quality and drift of false motion information throughout the decoding process.

The document Nakamura "Unification of derivation process for merge mode and MVP" (JCTVC-F419) describes a system that selects the first two available spatial predictors and performs a duplicate removal process between the two spatial predictor candidates (S0 and S1) and one temporal predictor candidate (Col). The duplicate removal process is not considering the locations of the spatial candidates and all three possible combinations of S0, S1 and Col are performed "blindly" as follows: S0 is compared with S1, S0 is compared with Col, and S1 is compared with Col. It may happen that one or both of the selected two spatial predictors are not the best alternatives.

The document Wiegand et al. "WD3 Working draft 3 of high efficiency video coding" (JCTVC-E603) disqualifies candidates if unavailable, if coded with intra mode, or if the motion of a candidate is identical to motion of another prediction unit within the same coding unit. Thus, it would have been more efficient to represent a coding unit with a larger segmentation instead of splitting it into smaller prediction units and indicating identical motion between those small prediction units.

The document Zheng et al "Merge candidate selection in 2NxN, Nx2N, and NxN mode" (m20723) proposes to allow additional merge candidates to survive the process described in Wiegand et al, section 8.4.2.1.2, based on the index of the merge candidate.

SUMMARY

The present invention introduces a method for generating a motion vector prediction list for an image block. In some embodiments video codecs employ in a motion prediction candidate list construction a way to reduce the complexity of the implementation. This can be achieved by performing a limited number of motion information comparisons between candidate pairs to remove the redundant candidates rather than comparing every available candidate pair. The decision of whether comparing two candidates may depend on the order of the candidates to be considered for the list and/or coding/prediction mode and/or location of the blocks associated with the candidates. In some embodiments a video codec employs a merge process for motion information coding and creates a list of motion prediction candidates from which one of the candidates is to be signalled as the motion information for the current coding or prediction unit. The motion prediction candidates may consist of

Amazon.com, Inc., Amazon.com Services LLC - Ex. 1017, Page 000402

several spatial motion predictions and a temporal motion prediction. The spatial candidates are obtained from the motion information of e.g. spatial neighbour blocks.
The invention is defined in the appended claims. Any examples and embodiments of the description not falling within the scope of the claims do not form part of the invention and are provided for illustrative purposes only.

According to a first aspect of the present invention there is provided a method according to appended claim 1.
According to a second aspect of the present invention there is provided a method according to appended claim 6.
According to a third aspect of the present invention there is provided an apparatus according to appended claim 9.

According to a fourth aspect of the present invention there is provided an apparatus according to appended claim 10.

According to a fifth aspect of the present invention there is provided a computer-readable storage medium according to appended claim 11.
According to a sixth aspect of the present invention there is provided a computer-readable storage medium according to appended claim 12.

;

Amazon.com, Inc., Amazon.com Services LLC - Ex. 1017, Page 000403

DESCRIPTION OF THE DRAWINGS

For better understanding of the present invention, reference will now be made by way of example to the accompanying drawings in which:

Figure 1 shows schematically an electronic device employing some embodiments of the invention;

Figure 2 shows schematically a user equipment suitable for employing some embodiments of the invention;

Figure 3 further shows schematically electronic devices employing embodiments of the invention connected using wireless and wired network connections;

Figure 4a shows schematically an embodiment of the invention as incorporated within an encoder;

Figure 4b shows schematically an embodiment of a prediction reference list generation and modification according to some embodiments of the invention;

Figures 5a and 5b show a flow diagram showing the operation of an embodiment of the invention with respect to the encoder as shown in figure 4a;

Figure 6a illustrates an example of spatial and temporal prediction of a prediction unit;

Figure 6b illustrates another example of spatial and temporal prediction of a prediction unit;

Figure 7 shows schematically an embodiment of the invention as incorporated within a decoder;

Figures 8a and 8b show a flow diagram of showing the operation of an embodiment of the invention with respect to the decoder shown in figure 7;

Figure 9 illustrates an example of a coding unit and some neighbour blocks of the coding unit;

Figure 10a illustrates an example of a horizontal division of the coding unit;

Figure 10b illustrates an example of a vertical division of the coding unit;

Figure 11a illustrates locations of five spatial neighbours A0, A1, B0, B1, B2 for a prediction unit generated as the second prediction unit of a horizontally divided coding unit;

Figure 11b illustrates locations of five spatial neighbours for a prediction unit generated as the second prediction unit of a vertically divided coding unit; and

Figure 12 illustrates an example of blocks between some spatial neighbours of a coding unit.

DETAILED DESCRIPTION OF SOME EXAMPLE EMBODIMENTS

The following describes in further detail suitable apparatus and possible mechanisms for the provision of improving the prediction accuracy and hence possibly reducing information to be transmitted in video coding systems. In this regard reference is first made to Figure 1 which shows a schematic block diagram of an exemplary apparatus or electronic device 50, which may incorporate a codec according to an embodiment of the invention.

The electronic device 50 may for example be a mobile terminal or user equipment of a wireless communication system. However, it would be appreciated that embodiments of the invention may be

Amazon.com, Inc., Amazon.com Services LLC - Ex. 1017, Page 000404

implemented within any electronic device or apparatus which may require encoding and decoding or encoding or decoding video images.

The apparatus 50 may comprise a housing 30 for incorporating and protecting the device. The apparatus 50 further may comprise a display 32 in the form of a liquid crystal display. In other embodiments of the invention the display may be any suitable display technology suitable to display an image or video. The apparatus 50 may further comprise a keypad 34. In other embodiments of the invention any suitable data or user interface mechanism may be employed. For example the user interface may be implemented as a virtual keyboard or data entry system as part of a touch-sensitive display. The apparatus may comprise a microphone 36 or any suitable audio input which may be a digital or analogue signal input. The apparatus 50 may further comprise an audio output device which in embodiments of the invention may be any one of: an earpiece 38, speaker, or an analogue audio or digital audio output connection. The apparatus 50 may also comprise a battery 40 (or in other embodiments of the invention the device may be powered by any suitable mobile energy device such as solar cell, fuel cell or clockwork generator). The apparatus may further comprise an infrared port 42 for short range line of sight communication to other devices. In other embodiments the apparatus 50 may further comprise any suitable short range communication solution such as for example a Bluetooth wireless connection or a USB/firewire wired connection.

The apparatus 50 may comprise a controller 56 or processor for controlling the apparatus 50. The controller 56 may be connected to memory 58 which in embodiments of the invention may store both data in the form of image and audio data and/or may also store instructions for implementation on the controller 56. The controller 56 may further be connected to codec circuitry 54 suitable for carrying out coding and decoding of audio and/or video data or assisting in coding and decoding carried out by the controller 56.

The apparatus 50 may further comprise a card reader 48 and a smart card 46, for example a UICC and UICC reader for providing user information and being suitable for providing authentication information for authentication and authorization of the user at a network.

The apparatus 50 may comprise radio interface circuitry 52 connected to the controller and suitable for generating wireless communication signals for example for communication with a cellular communications network, a wireless communications system or a wireless local area network. The apparatus 50 may further comprise an antenna 44 connected to the radio interface circuitry 52 for transmitting radio frequency signals generated at the radio interface circuitry 52 to other apparatus(es) and for receiving radio frequency signals from other apparatus(es).

In some embodiments of the invention, the apparatus 50 comprises a camera capable of recording or detecting individual frames which are then passed to the codec 54 or controller for processing. In some embodiments of the invention, the apparatus may receive the video image data for processing from another device prior to transmission and/or storage. In some embodiments of the invention, the apparatus 50 may receive either wirelessly or by a wired connection the image for coding/decoding.

Amazon.com, Inc., Amazon.com Services LLC - Ex. 1017, Page 000405

With respect to Figure 3, an example of a system within which embodiments of the present invention can be utilized is shown. The system 10 comprises multiple communication devices which can communicate through one or more networks. The system 10 may comprise any combination of wired or wireless networks including, but not limited to a wireless cellular telephone network (such as a GSM, UMTS, CDMA network etc), a wireless local area network (WLAN) such as defined by any of the IEEE 802.x standards, a Bluetooth personal area network, an Ethernet local area network, a token ring local area network, a wide area network, and the Internet.

The system 10 may include both wired and wireless communication devices or apparatus 50 suitable for implementing embodiments of the invention.

For example, the system shown in Figure 3 shows a mobile telephone network 11 and a representation of the internet 28. Connectivity to the internet 28 may include, but is not limited to, long range wireless connections, short range wireless connections, and various wired connections including, but not limited to, telephone lines, cable lines, power lines, and similar communication pathways.

The example communication devices shown in the system 10 may include, but are not limited to, an electronic device or apparatus 50, a combination of a personal digital assistant (PDA) and a mobile telephone 14, a PDA 16, an integrated messaging device (IMD) 18, a desktop computer 20, a notebook computer 22. The apparatus 50 may be stationary or mobile when carried by an individual who is moving. The apparatus 50 may also be located in a mode of transport including, but not limited to, a car, a truck, a taxi, a bus, a train, a boat, an airplane, a bicycle, a motorcycle or any similar suitable mode of transport.

Some or further apparatuses may send and receive calls and messages and communicate with service providers through a wireless connection 25 to a base station 24. The base station 24 may be connected to a network server 26 that allows communication between the mobile telephone network 11 and the internet 28. The system may include additional communication devices and communication devices of various types.

The communication devices may communicate using various transmission technologies including, but not limited to, code division multiple access (CDMA), global systems for mobile communications (GSM), universal mobile telecommunications system (UMTS), time divisional multiple access (TDMA), frequency division multiple access (FDMA), transmission control protocol-internet protocol (TCP-IP), short messaging service (SMS), multimedia messaging service (MMS), email, instant messaging service (IMS), Bluetooth, IEEE 802.11 and any similar wireless communication technology. A communications device involved in implementing various embodiments of the present invention may communicate using various media including, but not limited to, radio, infrared, laser, cable connections, and any suitable connection.

With respect to Figure 4a, a block diagram of a video encoder suitable for carrying out embodiments of the invention is shown. Furthermore, with respect to Figures 5a and 5b, the operation of the encoder exemplifying embodiments of the invention specifically with respect to construction of the list of candidate predictions is shown as a flow diagram.

Amazon.com, Inc., Amazon.com Services LLC - Ex. 1017, Page 000406

Figure 4a shows the encoder as comprising a pixel predictor 302, prediction error encoder 303 and prediction error decoder 304. Figure 4a also shows an embodiment of the pixel predictor 302 as comprising an inter-predictor 306, an intra-predictor 308, a mode selector 310, a filter 316, and a reference frame memory 318. In this embodiment the mode selector 310 comprises a block processor 381 and a cost evaluator 382. The encoder may further comprise an entropy encoder 330 for entropy encoding the bit stream.

Figure 4b depicts an embodiment of the inter predictor 306. The inter predictor 306 comprises a reference frame selector 360 for selecting reference frame or frames, a motion vector definer 361, a prediction list modifier 363 and a motion vector selector 364. These elements or some of them may be part of a prediction processor 362 or they may be implemented by using other means.

The pixel predictor 302 receives the image 300 to be encoded at both the inter-predictor 306 (which determines the difference between the image and a motion compensated reference frame 318) and the intra-predictor 308 (which determines a prediction for an image block based only on the already processed parts of the current frame or picture). The output of both the inter-predictor and the intra-predictor may be passed to the mode selector 310. The intra-predictor 308 may have more than one intra-prediction modes. Hence, each mode may perform the intra-prediction and provide the predicted signal to the mode selector 310. The mode selector 310 also receives a copy of the image 300.

The mode selector 310 determines which encoding mode to use to encode the current block. If the mode selector 310 decides to use an inter-prediction mode it will pass the output of the inter-predictor 306 to the output of the mode selector 310. If the mode selector 310 decides to use an intra-prediction mode it will pass the output of one of the intra-predictor modes to the output of the mode selector 310.

The output of the mode selector is passed to a first summing device 321. The first summing device may subtract the pixel predictor 302 output from the image 300 to produce a first prediction error signal 320 which is input to the prediction error encoder 303.

The pixel predictor 302 further receives from a preliminary reconstructor 339 the combination of the prediction representation of the image block 312 and the output 338 of the prediction error decoder 304. The preliminary reconstructed image 314 may be passed to the intra-predictor 308 and to a filter 316. The filter 316 receiving the preliminary representation may filter the preliminary representation and output a final reconstructed image 340 which may be saved in a reference frame memory 318. The reference frame memory 318 may be connected to the inter-predictor 306 to be used as the reference image against which the future image 300 is compared in inter-prediction operations.

The operation of the pixel predictor 302 may be configured to carry out any known pixel prediction algorithm known in the art.

The pixel predictor 302 may also comprise a filter 385 to filter the predicted values before outputting them from the pixel predictor 302.

The operation of the prediction error encoder 302 and prediction error decoder 304 will be described hereafter in further detail. In the following examples the encoder generates images in terms of 16x16 pixel macroblocks which go to form the full image or picture. Thus, for the following examples

Amazon.com, Inc., Amazon.com Services LLC - Ex. 1017, Page 000407

the pixel predictor 302 outputs a series of predicted macroblocks of size 16x16 pixels and the first summing device 321 outputs a series of 16x16 pixel residual data macroblocks which may represent the difference between a first macro-block in the image 300 against a predicted macro-block (output of pixel predictor 302). It would be appreciated that other size macro blocks may be used.

The prediction error encoder 303 comprises a transform block 342 and a quantizer 344. The transform block 342 transforms the first prediction error signal 320 to a transform domain. The transform is, for example, the DCT transform. The quantizer 344 quantizes the transform domain signal, e.g. the DCT coefficients, to form quantized coefficients.

The prediction error decoder 304 receives the output from the prediction error encoder 303 and performs the opposite processes of the prediction error encoder 303 to produce a decoded prediction error signal 338 which when combined with the prediction representation of the image block 312 at the second summing device 339 produces the preliminary reconstructed image 314. The prediction error decoder may be considered to comprise a dequantizer 346, which dequantizes the quantized coefficient values, e.g. DCT coefficients, to reconstruct the transform signal and an inverse transformation block 348, which performs the inverse transformation to the reconstructed transform signal wherein the output of the inverse transformation block 348 contains reconstructed block(s). The prediction error decoder may also comprise a macroblock filter (not shown) which may filter the reconstructed macroblock according to further decoded information and filter parameters.

In the following the operation of an example embodiment of the inter predictor 306 will be described in more detail. The inter predictor 306 receives the current block for inter prediction. It is assumed that for the current block there already exists one or more neighbouring blocks which have been encoded and motion vectors have been defined for them. For example, the block on the left side and/or the block above the current block may be such blocks. Spatial motion vector predictions for the current block can be formed e.g. by using the motion vectors of the encoded neighbouring blocks and/or of non-neighbour blocks in the same slice or frame, using linear or non-linear functions of spatial motion vector predictions, using a combination of various spatial motion vector predictors with linear or non-linear operations, or by any other appropriate means that do not make use of temporal reference information. It may also be possible to obtain motion vector predictors by combining both spatial and temporal prediction information of one or more encoded blocks. These kinds of motion vector predictors may also be called as spatio-temporal motion vector predictors.

Reference frames used in encoding the neighbouring blocks have been stored to the reference frame memory 404. The reference frames may be short term references or long term references and each reference frame may have a unique index indicative of the location of the reference frame in the reference frame memory. When a reference frame is no longer used as a reference frame it may be removed from the reference frame memory or marked as a non-reference frame wherein the storage location of that reference frame may be occupied for a new reference frame. In addition to the reference frames of the neighbouring blocks the reference frame selector 360 may also select one or more other frames as potential reference frames and store them to the reference frame memory.

Amazon.com, Inc., Amazon.com Services LLC - Ex. 1017, Page 000408

Motion vector information of encoded blocks is also stored into the memory so that the inter predictor 306 is able to retrieve the motion vector information when processing motion vector candidates for the current block.

In some embodiments the motion vectors are stored into one or more lists. For example, motion vectors of uni-directionally predicted frames (e.g. P-frames) may be stored to a list called as list 0. For bi-directionally predicted frames (e.g. B-frames) there may be two lists (list 0 and list 1) and for multi-predicted frames there may be more than two lists. Reference frame indices possibly associated with the motion vectors may also be stored in one or more lists.

In some embodiments there may be two or more motion vector prediction procedures and each procedure may have its own candidate set creation process. In one procedure, only the motion vector values are used. In another procedure, which may be called as a Merge Mode, each candidate element may comprise 1) The information whether 'block was uni-predicted using only list0' or 'block was uni-predicted using only list1' or 'block was bi-predicted using list0 and list1' 2) motion vector value for list0 3) Reference picture index in list0 4) motion vector value for list1 5) Reference picture index list1. Therefore, whenever two prediction candidates are to be compared, not only the motion vector values are compared, but also the five values mentioned above may be compared to determine whether they correspond with each other or not. On the other hand, if any of the comparisons indicate that the prediction candidates do not have equal motion information, no further comparisons need be performed.

The motion vector definer 361 defines candidate motion vectors for the current frame by using one or more of the motion vectors of one or more neighbour blocks and/or other blocks of the current block in the same frame and/or co-located blocks and/or other blocks of the current block in one or more other frames. These candidate motion vectors can be called as a set of candidate predictors or a predictor set. Each candidate predictor thus represents the motion vector of one or more already encoded block. In some embodiments the motion vector of the candidate predictor is set equal to the motion vector of a neighbour block for the same list if the current block and the neighbour block refer to the same reference frames for that list. Also for temporal prediction there may be one or more previously encoded frames wherein motion vectors of a co-located block or other blocks in a previously encoded frame can be selected as candidate predictors for the current block. The temporal motion vector predictor candidate can be generated by any means that make use of the frames other than the current frame.

The candidate motion vectors can also be obtained by using more than one motion vector of one or more other blocks such as neighbour blocks of the current block and/or co-located blocks in one or more other frames. As an example, any combination of the motion vector of the block to the left of the current block, the motion vector of the block above the current block, and the motion vector of the block at the up-right corner of the current block may be used (i.e. the block to the right of the block above the current block). The combination may be a median of the motion vectors or calculated by using other formulas. For example, one or more of the motion vectors to be used in the combination may be scaled by a scaling factor, an offset may be added, and/or a constant motion vector may be added. In some embodiments the combined motion vector is based on both temporal and spatial motion vectors, e.g. the

Amazon.com, Inc., Amazon.com Services LLC - Ex. 1017, Page 000409

motion vector of one or more of the neighbour block or other block of the current block and the motion vector of a co-located block or other block in another frame.

If a neighbour block does not have any motion vector information a default motion vector such as a zero motion vector may be used instead.

5 Figure 9 illustrates an example of a coding unit 900 and some neighbour blocks 901—905 of the coding unit. As can be seen from Figure 9, if the coding unit 900 represents the current block, the neighbouring blocks 901—905 labelled A0, A1, B0, B1 and B2 could be such neighbour blocks which may be used when obtaining the candidate motion vectors.

Creating additional or extra motion vector predictions based on previously added predictors may 10 be needed when the current number of candidates is limited or insufficient. This kind of creating additional candidates can be performed by combining previous two predictions and/or processing one previous candidate by scaling or adding offset and/or adding a zero motion vector with various reference indices. Hence, the motion vector definer 361 may examine how many motion vector candidates can be defined and how many potential candidate motion vectors exist for the current block. If the number of 15 potential motion vector candidates is smaller than a threshold, the motion vector definer 361 may create additional motion vector predictions.

In some embodiments the combined motion vector can be based on motion vectors in different lists. For example, one motion vector may be defined by combining one motion vector from the list 0 and one motion vector from the list 1 e.g. when the neighbouring or co-located block is a bi-directionally 20 predicted block and there exists one motion vector in the list 0 and one motion vector in the list 1 for the bi-directionally predicted block.

To distinguish the current block from the encoded/decoded blocks the motion vectors of which are used as candidate motion vectors, those encoded/decoded blocks are also called as reference blocks in this application.

25 In some embodiments not only the motion vector information of the reference block(s) is obtained (e.g. by copying) but also a reference index of the reference block in the reference picture list may be copied to the candidate list. The information whether the block was uni-predicted using only list0 or the block was uni-predicted using only list1 or the block was bi-predicted using list0 and list1 may also be copied. The candidate list may also be called as a candidate set or a set of motion vector prediction 30 candidates.

Figure 6a illustrates an example of spatial and temporal prediction of a prediction unit. There is depicted the current block 601 in the frame 600 and a neighbour block 602 which already has been encoded. The motion vector definer 361 has defined a motion vector 603 for the neighbour block 602 which points to a block 604 in the previous frame 605. This motion vector can be used as a potential 35 spatial motion vector prediction 610 for the current block. Figure 6a depicts that a co-located block 606 in the previous frame 605, i.e. the block at the same location than the current block but in the previous frame, has a motion vector 607 pointing to a block 609 in another frame 608. This motion vector 607 can be used as a potential temporal motion vector prediction-611 for the current frame.

Amazon.com, Inc., Amazon.com Services LLC - Ex. 1017, Page 000410

Figure 6b illustrates another example of spatial and temporal prediction of a prediction unit. In this example the block 606 of the previous frame 605 uses bi-directional prediction based on the block 609 of the frame preceding the frame 605 and on the block 612 succeeding the current frame 600. The temporal motion vector prediction for the current block 601 may be formed by using both the motion vectors 607, 614 or either of them.

The operation of the prediction list modifier 363 will now be described in more detail with reference to the flow diagram of Figures 5a and 5b. The prediction list modifier 363 initializes a motion vector prediction list to default values in block 500 of Figure 5a. The prediction list modifier 363 may also initialize a list index to an initial value such as zero. Then, in block 501 the prediction list modifier checks whether there are any motion vector candidates to process. If there is at least one motion vector candidate in the predictor set for processing, the prediction list modifier 363 generates the next motion vector candidate which may be a temporal motion vector or a spatial motion vector. The comparison can be an identicality/equivalence check or comparing the (absolute) difference against a threshold or any other similarity metric.

In the following, a merge process for motion information coding according to an example embodiment will be described in more detail. The encoder creates a list of motion prediction candidates from which one of the candidates is to be signalled as the motion information for the current coding unit or prediction unit. The motion prediction candidates may consist of several spatial motion predictions and a temporal motion prediction. The spatial candidates can be obtained from the motion information of e.g. the spatial neighbour blocks A0, A1, B0, B1, B2, whose motion information is used as spatial candidate motion predictions. The temporal motion prediction candidate may be obtained by processing the motion of a block in a frame other than the current frame. In this example embodiment, the encoder operations to construct the merge list for the spatial candidates may include the following. The operations may be carried out by the prediction list modifier 363, for example.

A maximum number of spatial motion prediction candidates to be included in the merge list may be defined. This maximum number may have been stored, for example, to the memory 58 of the apparatus 50, or to another appropriate place. It is also possible to determine the maximum number by using other means, or it may be determined in the software of the encoder of the apparatus 50.

In some embodiments the maximum number of spatial motion prediction candidates to be included in the merge list is four but in some embodiments the maximum number may be less than four or greater than four.

In this example the spatial motion prediction candidates are the spatial neighbour blocks A0, A1, B0, B1, B2. The spatial motion vector prediction candidate A1 is located on the left side of the prediction unit when the encoding/decoding order is from left to right and from top to bottom of the frame, slice or another entity to be encoded/decoded. Respectively, the spatial motion vector prediction candidate B1 is located above the prediction unit; the spatial motion vector prediction candidate B0 is on the right side of the spatial motion vector prediction candidate B1; the spatial motion vector prediction candidate A0 is below the spatial motion vector prediction candidate A1; and the spatial motion vector prediction

Amazon.com, Inc., Amazon.com Services LLC - Ex. 1017, Page 000411

candidate B2 is located on the same column than spatial motion vector prediction candidate A1 and on the same row than the spatial motion vector prediction candidate B1. In other words, the spatial motion vector prediction candidate B2 is cornerwise neighbouring the prediction unit as can be seen e.g. from Figure 9.

These spatial motion prediction candidates can be processed in a predetermined order, for example, A1, B1, B0, A0 and B2. The first spatial motion prediction candidate to be selected for further examination is thus A1. Before further examination is performed for the selected spatial motion prediction candidate, it may be determined whether the merge list already contains a maximum number of spatial motion prediction candidates. Hence, the prediction list modifier 363 compares 502 the number of spatial motion prediction candidates in the merge list with the maximum number, and if the number of spatial motion prediction candidates in the merge list is not less than the maximum number, the selected spatial motion prediction candidate is not included in the merge list and the process of constructing the merge list can be stopped 526. On the other hand, if the number of spatial motion prediction candidates in the merge list is less than the maximum number, a further analyses of the selected spatial motion prediction candidate is performed (blocks 504-522).

For all the spatial motion prediction candidates for which the further analyses is to be performed, some or all of the following conditions below may be tested for determining whether to include the spatial motion prediction candidate in the merge list.

The prediction list modifier 363 examines 504 if the prediction unit or block covering the spatial motion prediction candidate block is not available for motion prediction. If so, the candidate is not included in the merge list. The reason that the block is not available may be that the block is either coded in intra mode or resides in a different slice or outside of the picture area.

In addition to the common conditions above, for each spatial motion prediction candidate, if any of the following conditions holds, then the candidate is not included in the merge list, otherwise, it is included.

The prediction list modifier 363 determines 506 which spatial motion prediction candidate of the set of spatial motion prediction candidates is in question. If the spatial motion prediction candidate is the block A1, one or more of the following conditions may be examined 508, 510 to determine whether to include this spatial motion prediction candidate in the merge list or not. If the current coding unit 100 is vertically split into two rectangle prediction units 103, 104 as depicted in Figure 10b and the current prediction unit is the second prediction unit 104 in the coding/decoding order (508), this spatial motion prediction candidate is not included in the merge list. If the current coding unit 100 is not vertically split into two rectangle prediction units but it is horizontally split into two rectangle prediction units 101, 102 as depicted in Figure 10a and the current prediction unit is the second prediction unit in the coding/decoding order and the block A1 has the same motion information as the block B1 (510), this spatial motion prediction candidate (block A1) is not included in the merge list. In the example of Figure 10a the second prediction unit is the lower prediction unit 102 of the coding unit 100 and in the example of Figure 10b the second prediction unit is the rightmost prediction unit 104 of the coding unit 100. If

Amazon.com, Inc., Amazon.com Services LLC - Ex. 1017, Page 000412

none of the conditions above is fulfilled the block A1 is included in the merge list as a spatial motion prediction candidate (524).

If the spatial motion prediction candidate is the block B1, one or more of the following conditions may be examined 512, 514 to determine whether to include this spatial motion prediction candidate in the merge list or not. If the current coding unit 100 is horizontally split into two rectangle prediction units 101, 102 as depicted in Figure 10a and the current prediction unit is the second prediction unit 104 in the coding/decoding order (512), this spatial motion prediction candidate is not included in the merge list. If the current coding unit 100 is not horizontally split into two rectangle prediction units and if the block B1 has the same motion information than the block A1 (514), this spatial motion prediction candidate (block B1) is not included in the merge list. If none of the conditions above is fulfilled the block B1 is included in the merge list as a spatial motion prediction candidate (524).

If the spatial motion prediction candidate is the block B0, this spatial motion prediction candidate is not included in the merge list if the block B0 has the same motion information than the block B1 (516). Otherwise, if the number of spatial motion prediction candidates in the merge list is less than the maximum number of spatial motion prediction candidates, this spatial motion prediction candidate (block B0) is included in the merge list (524).

If the spatial motion prediction candidate is the block A0, this spatial motion prediction candidate is not included in the merge list if the block A0 has the same motion information than the block A1 (518). Otherwise, if the number of spatial motion prediction candidates in the merge list is less than the maximum number of spatial motion prediction candidates, this spatial motion prediction candidate (block A0) is included in the merge list (524).

If the spatial motion prediction candidate is the block B2, this spatial motion prediction candidate is not included in the merge list if the maximum number of spatial motion prediction candidates is four and the other blocks A0, A1, B0, and B1 are all decided to be included in the merge list (520). Otherwise, if the number of spatial motion prediction candidates in the merge list is less than the maximum number of spatial motion prediction candidates, the block B2 is not included in the merge list if the block B2 has the same motion information than the block B1 or the block A1 (522).

Then, after processing the blocks A1, B1, B0, A0 and B2 and including a subset of them in the merge list based on the above described conditions, no more redundancy check between these candidates are performed and remaining temporal motion prediction candidate and/or other possible additional candidates may be processed.

Comparing two blocks whether they have the same motion may be performed by comparing all the elements of the motion information, namely 1) The information whether 'the prediction unit is uni-predicted using only reference picture list0' or 'the prediction unit is uni-predicted using only reference picture list1' or 'the prediction unit is bi-predicted using both reference picture list0 and list1' 2) Motion vector value corresponding to the reference picture list0 3) Reference picture index in the reference picture list0 4) Motion vector value corresponding to the reference picture list1 5) Reference picture index in the reference picture list1.

Amazon.com, Inc., Amazon.com Services LLC - Ex. 1017, Page 000413

In some embodiments similar restrictions for comparing candidate pairs can be applied if the current coding unit is coded/decoded by splitting into four or any number of prediction units.

The maximum number of merge list candidates can be any non-zero value. In the example above the merger list candidates were the spatial neighbour blocks A0, A1, B0, B1, B2 and the temporal motion prediction candidate, but there may be more than one temporal motion prediction candidate and also other spatial motion prediction candidates than the spatial neighbour blocks. In some embodiments there may also be other spatial neighbour blocks than the blocks A0, A1, B0, B1, B2.

It is also possible that the maximum number of spatial motion prediction candidates included in the list can be different than four.

In some embodiments the maximum number of merge list candidates and maximum number of spatial motion prediction candidates included in the list can depend on whether a temporal motion vector candidate is included in the list or not.

A different number of spatial motion prediction candidates located at various locations in the current frame can be processed. The locations can be the same as or different than A1, B1, B0, A0 and B2.

The decision of including which spatial motion prediction candidates in the list can be realized in two steps. In the first step, some of the candidates are eliminated by checking whether the candidate block is available and/or the candidate block's prediction mode is intra and/or whether the current block is a second prediction unit of a coding unit coded with two prediction units and the candidate has the same motion with the first prediction unit. In the second step, remaining candidates are examined and some or all of them are included in the merge list. The examination in the second step does not include comparing motion information of each possible candidate pair but includes a subset of the possible comparison combinations.

The decisions for the candidates can be taken in any order of A1, B1, B0, A0 and B2 or independently in parallel.

For each candidate and/or a subset of the candidates, the following conditions may also be checked: Whether the candidate block has the same motion as the first prediction unit of the current coding unit when the current coding unit is split into two rectangle prediction units and the current prediction unit is the second prediction unit in the coding/decoding order.

Additional conditions related to various properties of current and/or previous slices and/or current and/or neighbour blocks can be utilized for determining whether to include a candidate in the list.

Motion comparison can be realized by comparing a subset of the whole motion information. For example, only the motion vector values for some or all reference picture lists and/or reference indices for some or all reference picture lists and/or an identifier value assigned to each block to represent its motion information can be compared. The comparison can be an identicality or an equivalence check or comparing the (absolute) difference against a threshold or any other similarity metric.

Amazon.com, Inc., Amazon.com Services LLC - Ex. 1017, Page 000414

Conditions for deciding whether a candidate is to be included in the list can include motion information comparison with any subset of the candidates as long as not all possible candidate pairs are compared eventually.

Deciding whether a temporal motion vector candidate is to be included in the list can be based on comparing its motion information with motion information of a subset of the spatial motion vector prediction candidates.

When comparing motion information of two blocks, motion information of additional blocks can be considered too. For example, when comparing the block B2 and the block A1, all the blocks between the block B2 and the block A1 (illustrated in Figure 12) are checked whether they have the same motion; and when comparing the block B2 and the block B1, all the blocks between the block B2 and the block B1 (illustrated in Figure 12) are checked whether they have the same motion. This embodiment can be implemented so that the right-most block of each prediction unit or all blocks of each prediction unit may store the information of how many consecutive blocks to the above have the same motion information. Also the bottom-most block of each prediction unit or all blocks of each prediction unit may store the information of how many consecutive blocks to the left have the same motion information. Using this information the condition for not including B0 in the list can be realized by checking if the number of consecutive blocks with the same motion to the left of B0 is greater than 0. The condition for not including A0 in the list can be realized by checking if the number of consecutive blocks with same motion to the above of A0 is greater than 0. The conditions for not including B2 can be modified as follows:

It is not examined whether the block B2 has same motion as the block B1 or whether the block B2 has same motion as the block A1, but how many consecutive blocks exists to the left of the block B1 with the same motion than the block B1 and/or how many consecutive blocks exist above the block A1 with the same motion. If the number of consecutive blocks with the same motion to the left of the block B1 is greater than the number of blocks between B2 and B1, or if the number of consecutive blocks with the same motion above the block A1 is greater than the number of blocks between the block B2 and the block A1, the block B2 is not included in the merge list.

If the above implementation is used, the value of how many consecutive blocks to the left/above have the same motion information can be determined by direct comparison of motion information or checking the prediction mode and/or the merge index if the block employs a merge process.

When coding/decoding the selected merge index, the information whether the merge process is employed for coding/decoding a Skip mode coding unit or an Inter Merge mode prediction unit can be taken into account. For example, if a context adaptive binary arithmetic coder (CABAC) is used for entropy coding/decoding, different contexts can be used for the bins depending on the coding mode (Skip mode or inter merge mode) of the current block. Furthermore, assigning two contexts depending on whether the merge process is employed in a Skip mode coding unit or an inter Merge mode prediction unit can be applied for only the most significant bin of the merge index.

Amazon.com, Inc., Amazon.com Services LLC - Ex. 1017, Page 000415

During the process of removal of redundant candidates, comparison between motion vector predictor candidates can also be based on any other information than the motion vector values. For example, it can be based on linear or non-linear functions of motion vector values, coding or prediction types of the blocks used to obtain the motion information, block size, the spatial location in the frame/(largest) coding unit/macroblock, the information whether blocks share the same motion with a block, the information whether blocks are in the same coding/prediction unit, etc.

The following pseudo code illustrates an example embodiment of the invention for constructing the merging list.

Inputs to this process are

- a luma location (xP, yP) specifying the top-left luma sample of the current prediction unit relative to the top-left sample of the current picture;
- variables specifying the width and the height of the prediction unit for luma, nPSW and nPSH; and
- a variable PartIdx specifying the index of the current prediction unit within the current coding unit.

Outputs of this process are (with N being replaced by A_0, A_1, B_0, B_1 or B_2 and with X being replaced by 0 or 1)

- the availability flags availableFlagN of the neighbouring prediction units,
- the reference indices refIdxLXN of the neighbouring prediction units,
- the prediction list utilization flags predFlagLXN of the neighbouring prediction units,
- the motion vectors mvLXN of the neighbouring prediction units.

For the derivation of availableFlagN, with N being A_0, A_1, B_0, B_1 or B_2 and (xN, yN) being (xP−1, yP + nPSH), (xP−1, yP + nPSH−1), (xP + nPSW, yP−1), (xP+nPSW−1, yP−1) or (xP−1, yP−1), the following applies.

- If one of the following conditions is true, the availableFlagN is set equal to 0, both components mvLXN are set equal to 0, refIdxLXN and predFlagLX[xN, yN] of the prediction unit covering luma location (xN, yN) are assigned respectively to mvLXN, refIdxLXN and predFlagLXN.
  - N is equal to B_2 and $availableFlagA_0 + availableFlagA_1 + availableFlagB_0 + availableFlagB_1$ is equal to 4.
  - The prediction unit covering luma location (xN, yN) is not available or PredMode is MODE_INTRA.
  - N is equal to A1 and PartMode of the current prediction unit is PART_Nx2N or PART_nLx2N or PART_nRx2N and PartIdx is equal to 1.
  - N is equal to A1 and PartMode of the current prediction unit is PART_2NxN or PART_2NxnU or PART_2NxnD and PartIdx is equal to 1 and the prediction units covering luma location (xP+nPSW−1, yP−1) (N = B1) and luma location (xN, yN) (Cand. N) have identical motion parameters:
    - mvLX[xP+nPSW−1, yP−1] == mvLX[xN, yN]
    - refIdxLX[xP+nPSW−1, yP−1] == refIdxLX[xN, yN]
    - predFlagLX[xP+nPSW−1, yP−1] == predFlagLX[xN, yN]

Amazon.com, Inc., Amazon.com Services LLC - Ex. 1017, Page 000416

- N is equal to B1 and PartMode of the current prediction unit is 2NxN or PART_2NxnU or PART_2NxnD and PartIdx is equal to 1.
- N is equal to B1 and the prediction units covering luma location (xP−1, yP+nPSH−1) (N = A1) and luma location (xN, yN) (Cand. N) have identical motion parameters:
  - mvLX[xP−1, yP+nPSH−1] == mvLX[xN, yN]
  - refIdxLX[xP−1, yP+nPSH−1] == refIdxLX[xN, yN]
  - predFlagLX[xP−1, yP+nPSH−1] == predFlagLX[xN, yN]
- N is equal to B0 and the prediction units covering luma location (xP+nPSW−1, yP−1) (N = B1) and luma location (xN, yN) (Cand. N) have identical motion parameters:
  - mvLX[xP+nPSW−1, yP−1] == mvLX[xN, yN]
  - refIdxLX[xP+nPSW−1, yP−1] == refIdxLX[xN, yN]
  - predFlagLX[xP+nPSW−1, yP−1] == predFlagLX[xN, yN]
- N is equal to A0 and the prediction units covering luma location (xP−1, yP+nPSH−1) (N = A1) and luma location (xN, yN) (Cand. N) have identical motion parameters:
  - mvLX[xP−1, yP+nPSH−1] == mvLX[xN, yN]
  - refIdxLX[xP−1, yP+nPSH−1] == refIdxLX[xN, yN]
  - predFlagLX[xP−1, yP+nPSH−1] == predFlagLX[xN, yN]
- N is equal to B2 and the prediction units covering luma location (xP+nPSW−1, yP−1) (N = B1) and luma location (xN, yN) (Cand. N) have identical motion parameters:
  - mvLX[xP+nPSW−1, yP−1] == mvLX[xN, yN]
  - refIdxLX[xP+nPSW−1, yP−1] == refIdxLX[xN, yN]
  - predFlagLX[xP+nPSW−1, yP−1] == predFlagLX[xN, yN]
- N is equal to B2 and the prediction units covering luma location (xP−1, yP+nPSH−1) (N = A1) and luma location (xN, yN) (Cand. N) have identical motion parameters:
  - mvLX[xP−1, yP+nPSH−1] == mvLX[xN, yN]
  - refIdxLX[xP−1, yP+nPSH−1] == refIdxLX[xN, yN]
  - predFlagLX[xP−1, yP+nPSH−1] == predFlagLX[xN, yN]
- PartMode of the current prediction unit is PART_NxN and PartIdx is equal to 3 and the prediction units covering luma location (xP−1, yP) (PartIdx = 2) and luma location (xP−1, yP−1) (PartIdx = 0) have identical motion parameters:
  - mvLX[xP−1, yP] == mvLX[xP−1, yP−1]
  - refIdxLX[xP−1, yP] == refIdxLX[xP−1, yP−1]
  - predFlagLX[xP−1, yP] == predFlagLX[xP−1, yP−1]

  and the prediction units covering luma location (xP, yP−1) (PartIdx = 1) and luma location (xN, yN) (Cand. N) have identical motion parameters:
  - mvLX[xP, yP−1] == mvLX[xN, yN]
  - refIdxLX[xP, yP−1] == refIdxLX[xN, yN]
  - predFlagLX[xP, yP−1] == predFlagLX[xN, yN]

Amazon.com, Inc., Amazon.com Services LLC - Ex. 1017, Page 000417

- PartMode of the current prediction unit is PART_NxN and PartIdx is equal to 3 and the prediction units covering luma location (xP, yP−1) (PartIdx = 1) and luma location (xP−1, yP−1) (PartIdx = 0) have identical motion parameters:
  - mvLX[xP, yP−1] == mvLX[xP−1, yP−1]
  - refIdxLX[xP, yP−1] == refIdxLX[xP−1, yP−1]
  - predFlagLX[xP, yP−1] == predFlagLX[xP−1, yP−1]

  and the prediction units covering luma location (xP−1, yP) (PartIdx = 2) and luma location (xN, yN) (Cand. N) have identical motion parameters:
  - mvLX[xP−1, yP] == mvLX[xN, yN]
  - refIdxLX[xP−1, yP] == refIdxLX[xN, yN]
  - predFlagLX[xP−1, yP] == predFlagLX[xN, yN]
- Otherwise, availableFlagN is set equal to 1 and the variables mvLX[xN, yN], refIdxLX[xN, yN] and predFlagLX[xN, yN] of the prediction unit covering luma location (xN, yN) are assigned respectively to mvLXN, refIdxLXN and predFlagLXN.

For the motion vector predictor candidate list generation process, each list candidate can include more information than the motion vector value, such as the reference lists used, the reference frames used in each list and motion vector for each list.

When all motion vector candidates have been examined, one motion vector is selected to be used as the motion vector for the current block. The motion vector selector 364 may examine different motion vectors in the list and determine which motion vector provides the most efficient encoding result, or the selection of the motion vector may be based on to other criteria as well. Information of the selected motion vector is provided for the mode selector for encoding and transmission to the decoder or for storage when the mode selector determines to use inter prediction for the current block. The information may include the index of the motion vector in the list, and/or motion vector parameters or other appropriate information.

The selected motion vector and the block relating to the motion vector is used to generate the prediction representation of the image block 312 which is provided as the output of the mode selector. The output may be used by the first summing device 321 to produce the first prediction error signal 320, as was described above.

The selected motion vector predictor candidate can be modified by adding a motion vector difference or can be used directly as the motion vector of the block. Moreover, after the motion compensation is performed by using the selected motion vector predictor candidate, the residual signal of the block can be transform coded or skipped to be coded.

Although the embodiments above have been described with respect to the size of the macroblock being 16x16 pixels, it would be appreciated that the methods and apparatus described may be configured to handle macroblocks of different pixel sizes.

Amazon.com, Inc., Amazon.com Services LLC - Ex. 1017, Page 000418

In the following the operation of an example embodiment of the decoder 600 is depicted in more detail with reference to Figure 7.

At the decoder side similar operations are performed to reconstruct the image blocks. Figure 7 shows a block diagram of a video decoder 700 suitable for employing embodiments of the invention and Figures 8a and 8b show a flow diagram of an example of a method in the video decoder. The bitstream to be decoded may be received from the encoder, from a network element, from a storage medium or from another source. The decoder is aware of the structure of the bitstream so that it can determine the meaning of the entropy coded codewords and may decode the bitstream by an entropy decoder 701 which performs entropy decoding on the received signal. The entropy decoder thus performs the inverse operation to the entropy encoder 330 of the encoder described above. The entropy decoder 701 outputs the results of the entropy decoding to a prediction error decoder 702 and a pixel predictor 704.

In some embodiments the entropy coding may not be used but another channel encoding may be in use, or the encoded bitstream may be provided to the decoder 700 without channel encoding. The decoder 700 may comprise a corresponding channel decoder to obtain the encoded codewords from the received signal.

The pixel predictor 704 receives the output of the entropy decoder 701. The output of the entropy decoder 701 may include an indication on the prediction mode used in encoding the current block. A predictor selector 714 within the pixel predictor 704 determines that an intra-prediction or an inter-prediction is to be carried out. The predictor selector 714 may furthermore output a predicted representation of an image block 716 to a first combiner 713. The predicted representation of the image block 716 is used in conjunction with the reconstructed prediction error signal 712 to generate a preliminary reconstructed image 718. The preliminary reconstructed image 718 may be used in the predictor 714 or may be passed to a filter 720. The filter 720, if used, applies a filtering which outputs a final reconstructed signal 722. The final reconstructed signal 722 may be stored in a reference frame memory 724, the reference frame memory 724 further being connected to the predictor 714 for prediction operations.

Also the prediction error decoder 702 receives the output of the entropy decoder 701. A dequantizer 792 of the prediction error decoder 702 may dequantize the output of the entropy decoder 701 and the inverse transform block 793 may perform an inverse transform operation to the dequantized signal output by the dequantizer 792. The output of the entropy decoder 701 may also indicate that prediction error signal is not to be applied and in this case the prediction error decoder produces an all zero output signal.

The decoder selects the 16x16 pixel residual macroblock to reconstruct. This residual macroblock is also called as a current block.

The decoder may receive information on the encoding mode used in encoding of the current block. The indication is decoded, when necessary, and provided to the reconstruction processor 791 of the prediction selector 714. The reconstruction processor 791 examines the indication and selects one of the intra-prediction mode(s), if the indication indicates that the block has been encoded using intra-

Amazon.com, Inc., Amazon.com Services LLC - Ex. 1017, Page 000419

prediction, or the inter-prediction mode, if the indication indicates that the block has been encoded using inter-prediction.

For inter-prediction mode the reconstruction processor 791 may comprise one or more elements corresponding to the prediction processor 362 of the encoder, such as a motion vector definer, a prediction list modifier and/or a motion vector selector.

The reconstruction processor 791 initializes a motion vector prediction list to default values in block 800. As was the case in the encoding part, in this example the spatial motion prediction candidates are the spatial neighbour blocks A0, A1, B0, B1, B2 and these spatial motion prediction candidates are processed in the same predetermined order than in the encoder: A1, B1, B0, A0 and B2. The first spatial motion prediction candidate to be selected for further examination is thus A1. Before further examination is performed for the selected spatial motion prediction candidate, it is examined whether the merge list already contains a maximum number of spatial motion prediction candidates. If the number of spatial motion prediction candidates in the merge list is not less than the maximum number, the selected spatial motion prediction candidate is not included in the merge list and the process of constructing the merge list can be stopped 826. On the other hand, if the number of spatial motion prediction candidates in the merge list is less than the maximum number, a further analyses of the selected spatial motion prediction candidate is performed (blocks 804-822).

The decoder examines 804 if the prediction unit or block covering the spatial motion prediction candidate block is not available for motion prediction. If so, the candidate is not included in the merge list. The reason that the block is not available may be that the block is either coded in intra mode or resides in a different slice or outside of the picture area.

In addition to the common conditions above, for each spatial motion prediction candidate, if any of the following conditions holds, then the candidate is not included in the merge list, otherwise, it is included.

The decoder determines 806 which spatial motion prediction candidate of the set of spatial motion prediction candidates is in question. If the spatial motion prediction candidate is the block A1, one or more of the following conditions may be examined 808, 810 to determine whether to include this spatial motion prediction candidate in the merge list or not. If the current coding unit 100 is vertically split into two rectangle prediction units 103, 104 as depicted in Figure 10b and the current prediction unit is the second prediction unit 104 in the coding/decoding order (808), this spatial motion prediction candidate is not included in the merge list. If the current coding unit 100 is not vertically split into two rectangle prediction units but it is horizontally split into two rectangle prediction units 101, 102 as depicted in Figure 10a and the current prediction unit is the second prediction unit in the coding/decoding order and the block A1 has the same motion information as the block B1 (810), this spatial motion prediction candidate (block A1) is not included in the merge list. In the example of Figure 10a the second prediction unit is the lower prediction unit 102 of the coding unit 100 and in the example of Figure 10b the second prediction unit is the rightmost prediction unit 104 of the coding unit 100. If none of the conditions above is fulfilled the block A1 is included in the merge list as a spatial motion prediction candidate (824).

Amazon.com, Inc., Amazon.com Services LLC - Ex. 1017, Page 000420

If the spatial motion prediction candidate is the block B1, one or more of the following conditions may be examined 812, 814 to determine whether to include this spatial motion prediction candidate in the merge list or not. If the current coding unit 100 is horizontally split into two rectangle prediction units 101, 102 as depicted in Figure 10a and the current prediction unit is the second prediction unit 104 in the coding/decoding order (812), this spatial motion prediction candidate is not included in the merge list. If the current coding unit 100 is not horizontally split into two rectangle prediction units and if the block B1 has the same motion information than the block A1 (814), this spatial motion prediction candidate (block B1) is not included in the merge list. If none of the conditions above is fulfilled the block B1 is included in the merge list as a spatial motion prediction candidate (824).

If the spatial motion prediction candidate is the block B0, this spatial motion prediction candidate is not included in the merge list if the block B0 has the same motion information than the block B1 (816). Otherwise, if the number of spatial motion prediction candidates in the merge list is less than the maximum number of spatial motion prediction candidates, this spatial motion prediction candidate (block B0) is included in the merge list (824).

If the spatial motion prediction candidate is the block A0, this spatial motion prediction candidate is not included in the merge list if the block A0 has the same motion information than the block A1 (818). Otherwise, if the number of spatial motion prediction candidates in the merge list is less than the maximum number of spatial motion prediction candidates, this spatial motion prediction candidate (block A0) is included in the merge list (824).

If the spatial motion prediction candidate is the block B2, this spatial motion prediction candidate is not included in the merge list if the maximum number of spatial motion prediction candidates is four and the other blocks A0, A1, B0, and B1 are all decided to be included in the merge list (820). Otherwise, if the number of spatial motion prediction candidates in the merge list is less than the maximum number of spatial motion prediction candidates, the block B2 is not included in the merge list if the block B2 has the same motion information than the block B1 or the block A1 (822).

Then, after processing the blocks A1, B1, B0, A0 and B2 and including a subset of them in the merge list based on the above described conditions, no more redundancy check between these candidates are performed and remaining temporal motion prediction candidate and/or other possible additional candidates may be processed.

When the merge list has been constructed the decoder may use 828 the indication of the motion vector received from the encoder to select the motion vector for decoding the current block. The indication may be, for example, an index to the merge list.

Basically, after the reconstruction processor 791 has constructed the merge list, it would correspond with the merge list constructed by the encoder if the reconstruction processor 791 has the same information available than the encoder had. If some information has been lost during transmission the information from the encoder to the decoder, it may affect the generation of the merge list in the decoder 700.

Amazon.com, Inc., Amazon.com Services LLC - Ex. 1017, Page 000421

The above examples describe the operation mainly in the merge mode but the encoder and decoder may also operate in other modes.

The embodiments of the invention described above describe the codec in terms of separate encoder and decoder apparatus in order to assist the understanding of the processes involved. However, it would be appreciated that the apparatus, structures and operations may be implemented as a single encoder-decoder apparatus/structure/operation. Furthermore in some embodiments of the invention the coder and decoder may share some or all common elements.

Although the above examples describe embodiments of the invention operating within a codec within an electronic device, it would be appreciated that the invention as described below may be implemented as part of any video codec. Thus, for example, embodiments of the invention may be implemented in a video codec which may implement video coding over fixed or wired communication paths.

Thus, user equipment may comprise a video codec such as those described in embodiments of the invention above.

It shall be appreciated that the term user equipment is intended to cover any suitable type of wireless user equipment, such as mobile telephones, portable data processing devices or portable web browsers.

Furthermore elements of a public land mobile network (PLMN) may also comprise video codecs as described above.

In general, the various embodiments of the invention may be implemented in hardware or special purpose circuits, software, logic or any combination thereof. For example, some aspects may be implemented in hardware, while other aspects may be implemented in firmware or software which may be executed by a controller, microprocessor or other computing device, although the invention is not limited thereto. While various aspects of the invention may be illustrated and described as block diagrams, flow charts, or using some other pictorial representation, it is well understood that these blocks, apparatus, systems, techniques or methods described herein may be implemented in, as non-limiting examples, hardware, software, firmware, special purpose circuits or logic, general purpose hardware or controller or other computing devices, or some combination thereof.

The embodiments of this invention may be implemented by computer software executable by a data processor of the mobile device, such as in the processor entity, or by hardware, or by a combination of software and hardware. Further in this regard it should be noted that any blocks of the logic flow as in the Figures may represent program steps, or interconnected logic circuits, blocks and functions, or a combination of program steps and logic circuits, blocks and functions. The software may be stored on such physical media as memory chips, or memory blocks implemented within the processor, magnetic media such as hard disk or floppy disks, and optical media such as for example DVD and the data variants thereof, CD.

The memory may be of any type suitable to the local technical environment and may be implemented using any suitable data storage technology, such as semiconductor based memory devices, magnetic memory devices and systems, optical memory devices and systems, fixed memory and

Amazon.com, Inc., Amazon.com Services LLC - Ex. 1017, Page 000422

removable memory. The data processors may be of any type suitable to the local technical environment, and may include one or more of general purpose computers, special purpose computers, microprocessors, digital signal processors (DSPs) and processors based on multi core processor architecture, as non limiting examples.

Embodiments of the inventions may be practiced in various components such as integrated circuit modules. The design of integrated circuits is by and large a highly automated process. Complex and powerful software tools are available for converting a logic level design into a semiconductor circuit design ready to be etched and formed on a semiconductor substrate.

Programs, such as those provided by Synopsys, Inc. of Mountain View, California and Cadence Design, of San Jose, California automatically route conductors and locate components on a semiconductor chip using well established rules of design as well as libraries of pre stored design modules. Once the design for a semiconductor circuit has been completed, the resultant design, in a standardized electronic format (e.g., Opus, GDSII, or the like) may be transmitted to a semiconductor fabrication facility or "fab" for fabrication.

The foregoing description has provided by way of exemplary and non-limiting examples a full and informative description of the exemplary embodiment of this invention. However, various modifications and adaptations may become apparent to those skilled in the relevant arts in view of the foregoing description, when read in conjunction with the accompanying drawings and the appended claims.

Amazon.com, Inc., Amazon.com Services LLC - Ex. 1017, Page 000423

Claims:

1. A method comprising:

receiving a block (900) of pixels including a prediction unit;

determining for the block (900) of pixels a set of spatial motion vector prediction candidates located below-left (901), left (902), above-left (905), above (904) and above-right (903) of the prediction unit; the spatial motion vector prediction candidates being provided with motion information comprising at least a motion vector and a reference index;

determining a subset of spatial motion vector prediction candidate pairs among existing spatial motion vector prediction candidate pairs for comparison among all available spatial motion vector prediction candidate pairs in the set of spatial motion vector prediction candidates;

selecting a spatial motion vector prediction candidate from the set of spatial motion vector prediction candidates as a potential spatial motion vector prediction candidate to be included in a merge list for the prediction unit;

examining the subset of spatial motion vector prediction candidate pairs to determine which other spatial motion vector prediction candidate is defined to belong to the same spatial motion vector prediction candidate pair than the selected spatial motion vector prediction candidate (610);

comparing motion information of the selected spatial motion vector prediction candidate with motion information of the other spatial motion vector prediction candidate;

if the comparison indicates that the motion vector information of the other spatial motion vector prediction candidate corresponds with the motion vector information of the selected spatial motion vector prediction candidate, excluding the selected spatial motion vector prediction candidate from the merge list;

wherein the method further comprises selecting one motion vector prediction candidate from the merge list to represent a motion vector prediction for the block of pixels;

determining a maximum number of spatial motion vector prediction candidates to be included in a merge list;

limiting the number of spatial motion vector prediction candidates in the merge list smaller than or equal to the maximum number;

if the number of spatial motion vector prediction candidates in the merge list is smaller than the maximum number, examining whether a prediction unit to which the potential spatial motion vector prediction candidate belongs is available for motion prediction;

if so, performing at least one of the following:

if the potential spatial motion vector prediction candidate (902) is located on the left side of the prediction unit, excluding the potential spatial motion vector prediction candidate (902) from the merge list if any of the following conditions are fulfilled:

Amazon.com, Inc., Amazon.com Services LLC - Ex. 1017, Page 000424

– the received block of pixels is vertically divided into a first prediction unit and a second prediction unit, and the prediction unit is the second prediction unit in coding order;

– the received block of pixels is horizontally divided into a first prediction unit and a second prediction unit, and if the prediction unit is the second prediction unit in coding order, and the potential spatial motion vector prediction candidate (902) has the same motion vectors and the same reference indices than the spatial motion vector prediction candidate (904) above the prediction unit;

if the potential spatial motion vector prediction candidate (904) is located above the prediction unit, excluding the potential spatial motion vector prediction candidate (904) from the merge list if any of the following conditions are fulfilled:

– the received block of pixels is horizontally divided into a first prediction unit and a second prediction unit, and the prediction unit is the second prediction unit in coding order;

– the potential spatial motion vector prediction candidate (904) has the same motion vectors and the same reference indices than the spatial motion vector prediction candidate (902) on the left side of the prediction unit;

if the potential spatial motion vector prediction candidate (903) is located on the right side of the spatial motion vector prediction candidate (904) above the prediction unit, excluding the potential spatial motion vector prediction candidate (903) from the merge list if the potential spatial motion vector prediction candidate (903) has the same motion vectors and the same reference indices than the spatial motion vector prediction candidate (904) above the prediction unit;

if the potential spatial motion vector prediction candidate (901) is located below the spatial motion vector prediction candidate (902) on the left side of the prediction unit, excluding the potential spatial motion vector prediction candidate (901) from the merge list if the potential spatial motion vector prediction candidate (901) has the same motion vectors and the same reference indices than the spatial motion vector prediction candidate (902) on the left side of the prediction unit;

if the potential spatial motion vector prediction candidate (905) is cornerwise above-left neighbouring the prediction unit, excluding the potential spatial motion vector prediction candidate (905) from the merge list if any of the following conditions are fulfilled:

– all the other spatial motion vector prediction candidates (901—904) have been included in the merge list;

– the potential spatial motion vector prediction candidate (905) has the same motion vectors and the same reference indices than the spatial motion vector prediction candidate (904) above the prediction unit;

Amazon.com, Inc., Amazon.com Services LLC - Ex. 1017, Page 000425

– the potential spatial motion vector prediction candidate (905) has the same motion vectors and the same reference indices than the spatial motion vector prediction candidate (902) on the left side of the prediction unit.

2. The method according to claim 1 comprising selecting spatial motion vector prediction candidates from the set of spatial motion vector prediction candidates as the potential spatial motion vector prediction candidate in a predetermined order.

3. The method according to claim 1 or 2, comprising comparing motion information of the potential spatial motion vector prediction candidate with motion information of at most one other spatial motion vector prediction candidate of the set of spatial motion vector prediction candidates.

4. The method according to any of the claims 1 to 3 comprising examining whether the received block of pixels is divided into a first prediction unit and a second prediction unit in coding order; and if so, excluding the potential spatial motion vector prediction candidate from the merge list if the prediction unit is the second prediction unit.

5. The method according to any of the claims 1 to 4 further comprising including a temporal motion prediction candidate into the merge list.

6. A method comprising:

receiving an encoded block of pixels including a prediction unit;

determining for the encoded block (900) of pixels a set of spatial motion vector prediction candidates located below-left (901), left (902), above-left (905), above (904) and above-right (903) of the prediction unit; the spatial motion vector prediction candidates being provided with motion information comprising at least a motion vector and a reference index;

determining a subset of spatial motion vector prediction candidate pairs among existing spatial motion vector prediction candidate pairs for comparison among all available spatial motion vector prediction candidate pairs in the set of spatial motion vector prediction candidates;

selecting a spatial motion vector prediction candidate from the set of spatial motion vector prediction candidates as a potential spatial motion vector prediction candidate to be included in a merge list for the prediction unit;

examining the subset of spatial motion vector prediction candidate pairs to determine which other spatial motion vector prediction candidate is defined to belong to the same spatial motion vector prediction candidate pair than the selected spatial motion vector prediction candidate;

comparing motion information of the selected spatial motion vector prediction candidate with motion information of the other spatial motion vector prediction candidate;

Amazon.com, Inc., Amazon.com Services LLC - Ex. 1017, Page 000426

if the comparison indicates that the motion vector information of the other spatial motion vector prediction candidate corresponds with the motion vector information of the selected spatial motion vector prediction candidate, excluding the selected spatial motion vector prediction candidate from the merge list

wherein the method further comprises selecting one motion vector prediction candidate from the merge list to represent a motion vector prediction for the received encoded block of pixels;

determining a maximum number of spatial motion vector prediction candidates to be included in a merge list;

limiting the number of spatial motion vector prediction candidates in the merge list smaller or equal to the maximum number;

if the number of spatial motion vector prediction candidates in the merge list smaller than the maximum number, examining whether a prediction unit to which the potential spatial motion vector prediction candidate belongs is available for motion prediction;

if so, performing at least one of the following:

if the potential spatial motion vector prediction candidate (902) is located on the left side of the prediction unit, excluding the potential spatial motion vector prediction candidate (902) from the merge list if any of the following conditions are fulfilled:

– the received encoded block of pixels is vertically divided into a first prediction unit and a second prediction unit, and the prediction unit is the second prediction unit;

– the received encoded block of pixels is horizontally divided into a first prediction unit and a second prediction unit, and if the prediction unit is the second prediction unit, and the potential spatial motion vector prediction candidate (902) has the same motion vectors and the same reference indices than the spatial motion vector prediction candidate (904) above the prediction unit;

if the potential spatial motion vector prediction candidate (904) is located above the prediction unit, excluding the potential spatial motion vector prediction candidate (904) from the merge list if any of the following conditions are fulfilled:

– the received encoded block of pixels is horizontally divided into a first prediction unit and a second prediction unit, and the prediction unit is the second prediction unit in decoding order;

– the potential spatial motion vector prediction candidate (904) has the same motion vectors and the same reference indices than the spatial motion vector prediction candidate (902) on the left side of the prediction unit;

if the potential spatial motion vector prediction candidate (903) is located on the right side of the spatial motion vector prediction candidate (904) above the prediction unit,

Amazon.com, Inc., Amazon.com Services LLC - Ex. 1017, Page 000427

excluding the potential spatial motion vector prediction candidate (903) from the merge list if the potential spatial motion vector prediction candidate has the same motion vectors and the same reference indices than the spatial motion vector prediction candidate (904) above the prediction unit;

if the potential spatial motion vector prediction candidate (901) is located below the spatial motion vector prediction candidate (902) on the left side of the prediction unit, excluding the potential spatial motion vector prediction candidate (901) from the merge list if the potential spatial motion vector prediction candidate (901) has the same motion vectors and the same reference indices than the spatial motion vector prediction candidate (902) on the left side of the prediction unit;

if the potential spatial motion vector prediction candidate (905) is cornerwise above-left neighbouring the prediction unit, excluding the potential spatial motion vector prediction candidate (905) from the merge list if any of the following conditions are fulfilled:

- all the other spatial motion vector prediction candidates (901—904) have been included in the merge list;
- the potential spatial motion vector prediction candidate (905) has the same motion vectors and the same reference indices than the spatial motion vector prediction candidate (904) above the prediction unit;
- the potential spatial motion vector prediction candidate (905) has the same motion vectors and the same reference indices than the spatial motion vector prediction candidate (902) on the left side of the prediction unit.

7. The method according to claim 6 comprising comparing motion information of the potential spatial motion vector prediction candidate with motion information of at most one other spatial motion vector prediction candidate of the set of spatial motion vector prediction candidates.

8. The method according to claim 6 or 7 comprising examining whether the received encoded block of pixels is divided into a first prediction unit and a second prediction unit in decoding order; and if so, excluding the potential spatial motion vector prediction candidate from the merge list if the prediction unit is the second prediction unit.

9. An apparatus comprising means for performing a method according to any one of claims 1 to 5.

Amazon.com, Inc., Amazon.com Services LLC - Ex. 1017, Page 000428

10. An apparatus comprising means for performing a method according to any one of claims 6 to 8 .

11. A computer-readable storage medium having computer-readable instructions thereon which, when executed by one or more processors, cause one or more processors to perform a method of any one of claims 1 to 5.

12. A computer-readable storage medium having computer-readable instructions thereon which, when executed by one or more processors, cause one or more processors to perform a method of any one of claims 6 to 8 .

Amazon.com, Inc., Amazon.com Services LLC - Ex. 1017, Page 000429

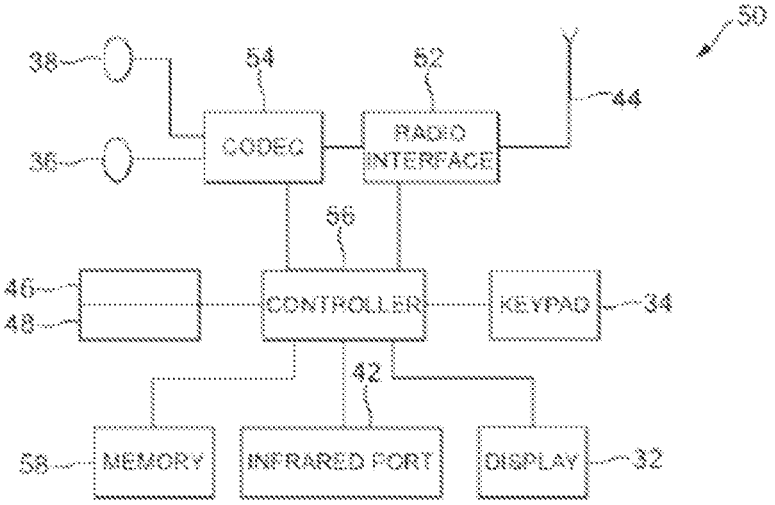
50
38
54
52
44
36
CODEC
RADIO INTERFACE
56
46
48
CONTROLLER
KEYPAD
34
42
58
MEMORY
INFRARED PORT
DISPLAY
32

FIG.1

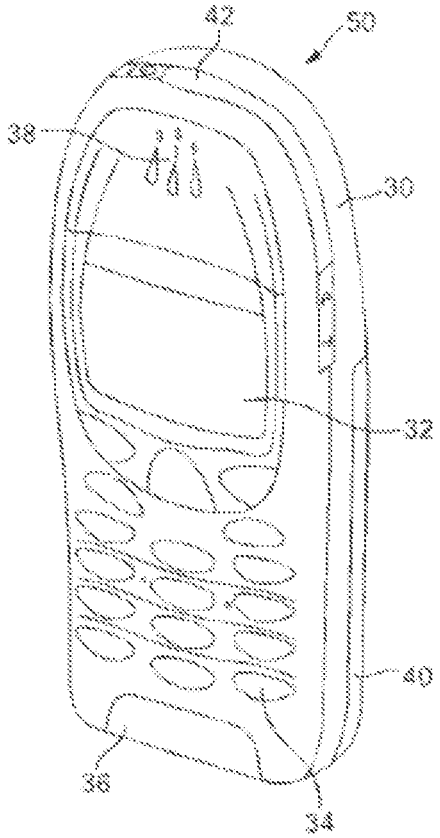
42
50
28
38
30
32
40
36
34

FIG. 2

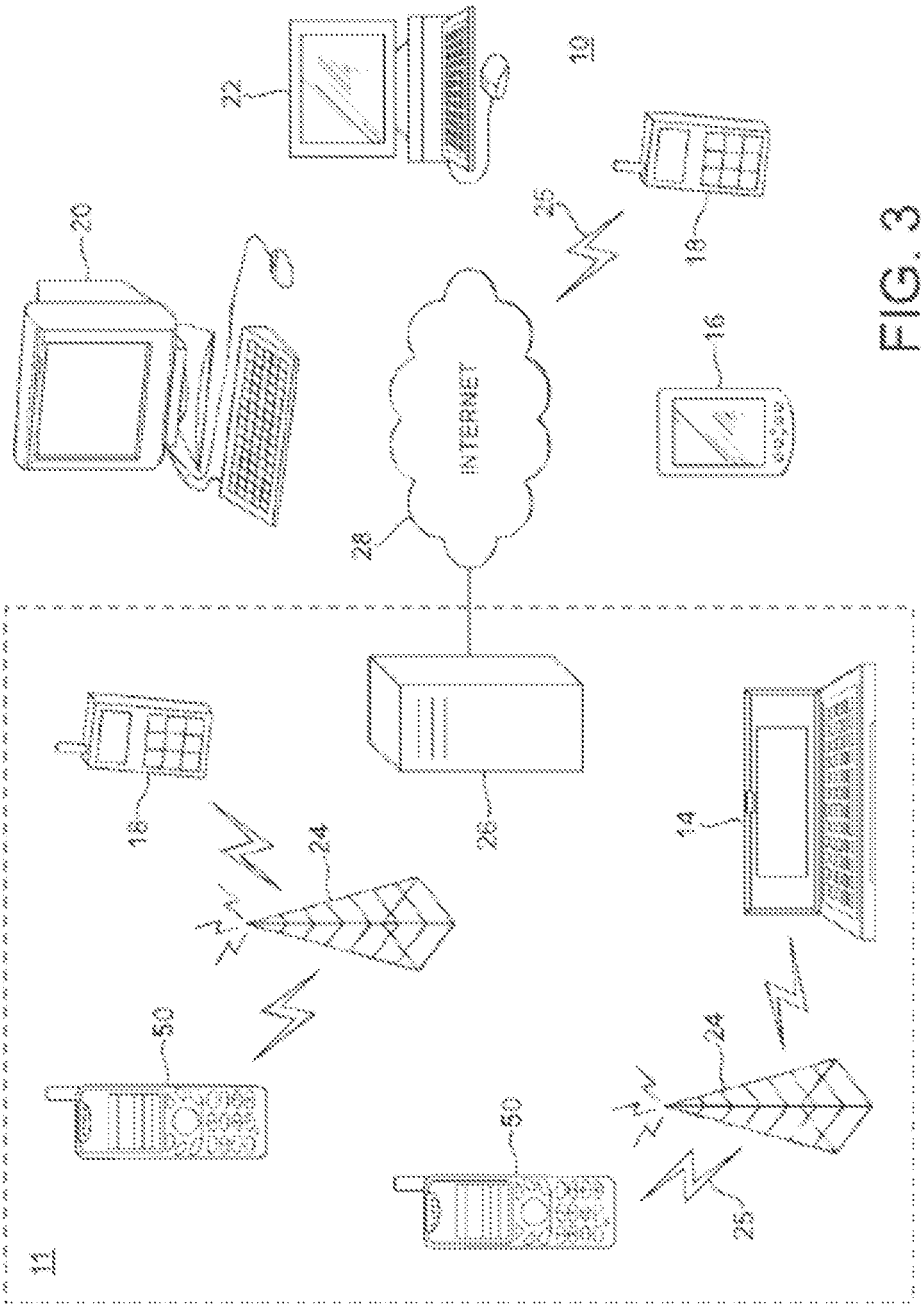

FIG. 3

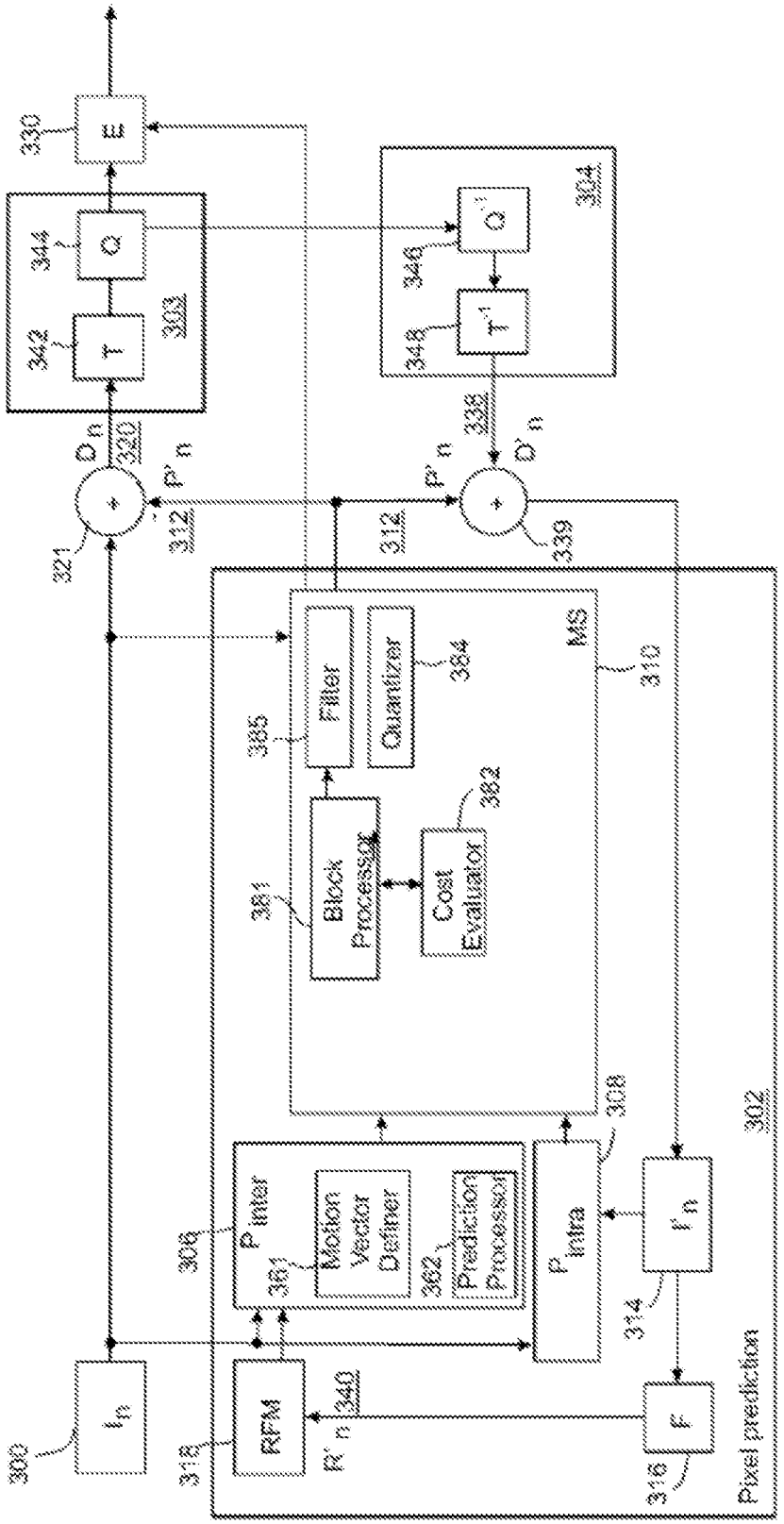
300
I_n
318
RFM
R'_n 340
P_{inter}
306
361
Motion Vector Definer
362
Prediction Processor
P_{intra}
308
I'_n
314
F
316
Pixel prediction
302
MS
310
381
Block Processor
Cost Evaluator
382
385
Filter
Quantizer
384
D_n
320
P'_n
312
321
342
T
344
Q
303
330
E
Q^{-1}
346
T^{-1}
348
304
338
D'_n
339

Fig. 4a

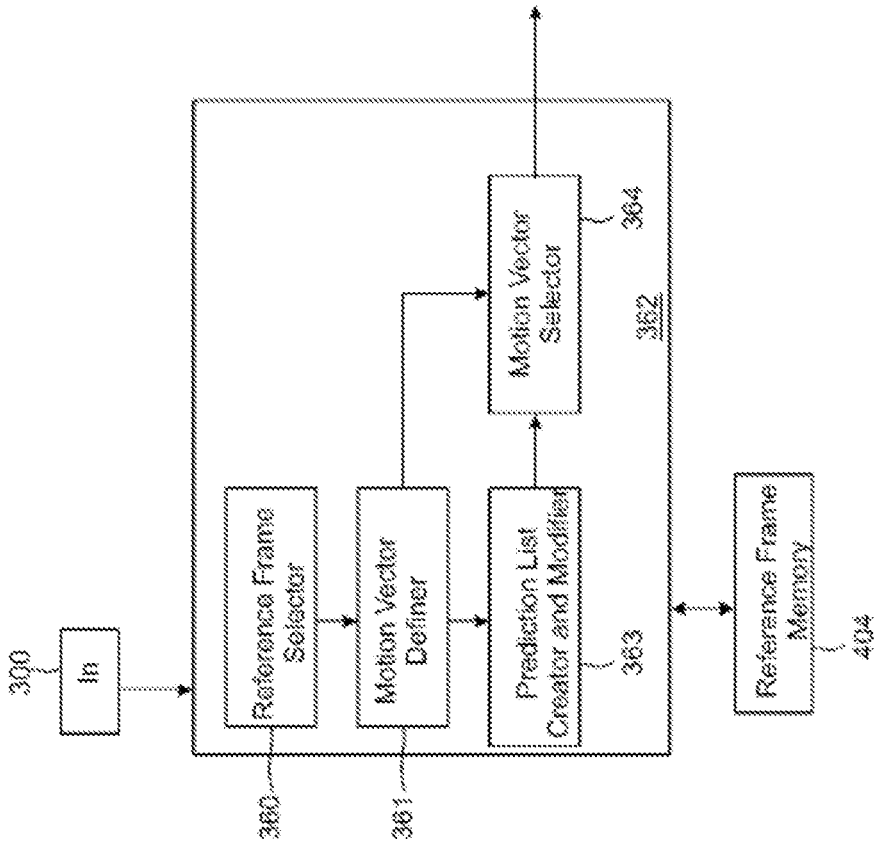
300
In
Reference Frame Selector
360
Motion Vector Definer
361
Prediction List Creator and Modifier
363
Motion Vector Selector
364
362
Reference Frame Memory
404

Fig. 4b

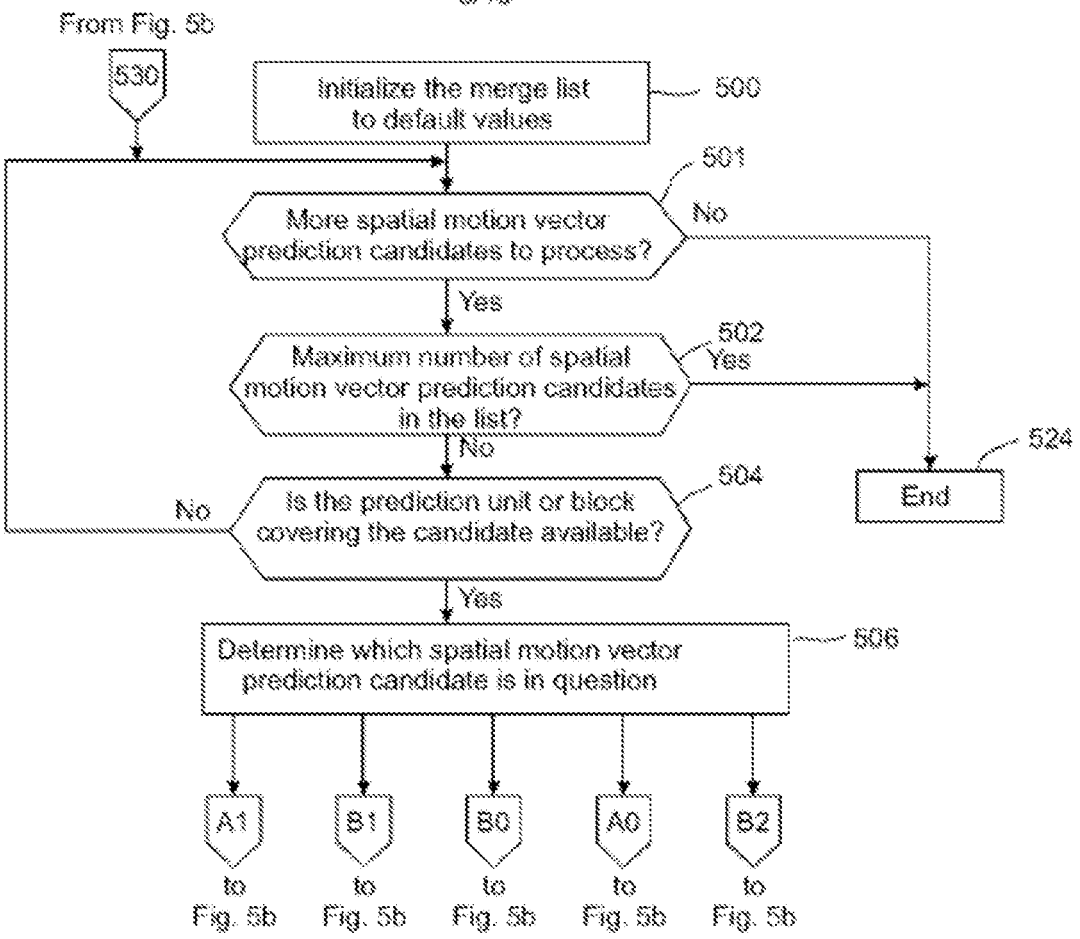
From Fig. 5b
530
Initialize the merge list to default values
500
501
More spatial motion vector prediction candidates to process?
No
Yes
502
Maximum number of spatial motion vector prediction candidates in the list?
Yes
No
524
End
504
Is the prediction unit or block covering the candidate available?
No
Yes
506
Determine which spatial motion vector prediction candidate is in question
A1
B1
B0
A0
B2
to Fig. 5b
to Fig. 5b
to Fig. 5b
to Fig. 5b
to Fig. 5b

Fig. 5a

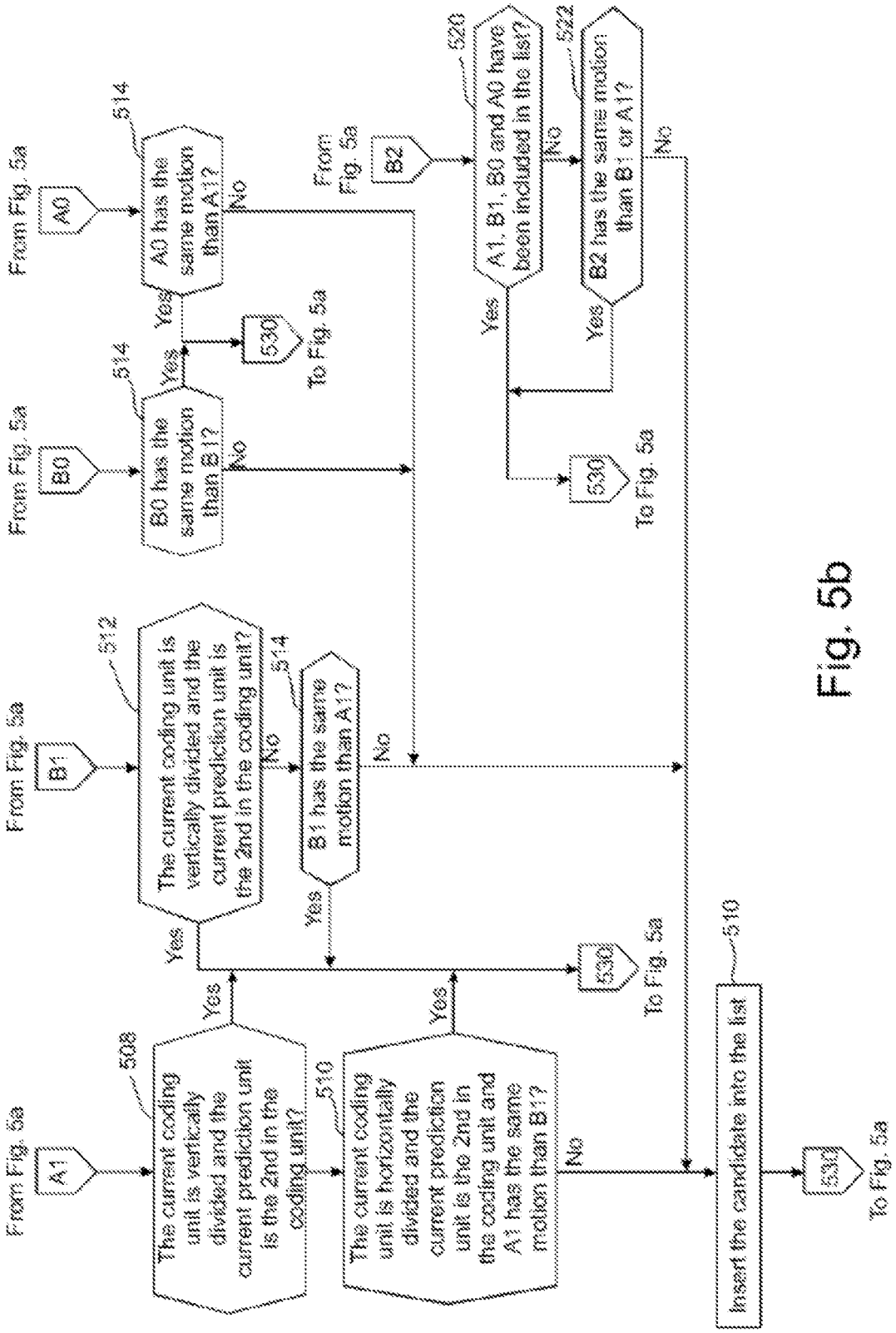
From Fig. 5a
A1
508
The current coding unit is vertically divided and the current prediction unit is the 2nd in the coding unit?
Yes
510
The current coding unit is horizontally divided and the current prediction unit is the 2nd in the coding unit and A1 has the same motion than B1?
Yes
No
From Fig. 5a
B1
512
The current coding unit is vertically divided and the current prediction unit is the 2nd in the coding unit?
Yes
No
514
B1 has the same motion than A1?
Yes
No
530
To Fig. 5a
From Fig. 5a
B0
514
B0 has the same motion than B1?
Yes
No
530
To Fig. 5a
From Fig. 5a
A0
514
A0 has the same motion than A1?
Yes
No
530
To Fig. 5a
From Fig. 5a
B2
520
A1, B1, B0 and A0 have been included in the list?
Yes
No
522
B2 has the same motion than B1 or A1?
Yes
No
530
To Fig. 5a
510
Insert the candidate into the list
530
To Fig. 5a

Fig. 5b

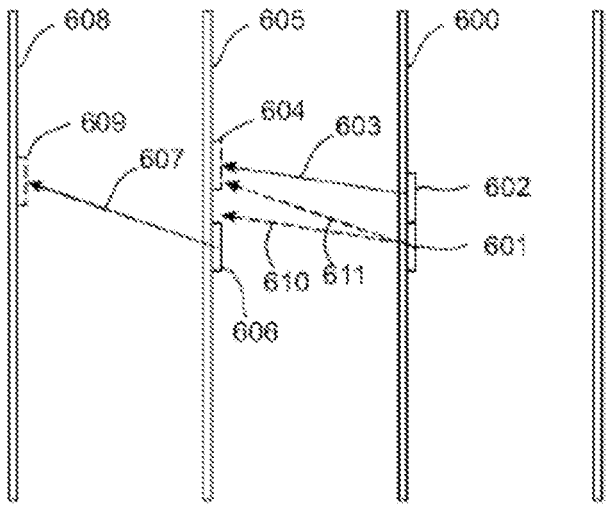
608
605
600
609
604
603
607
602
601
610
611
606

Fig. 6a

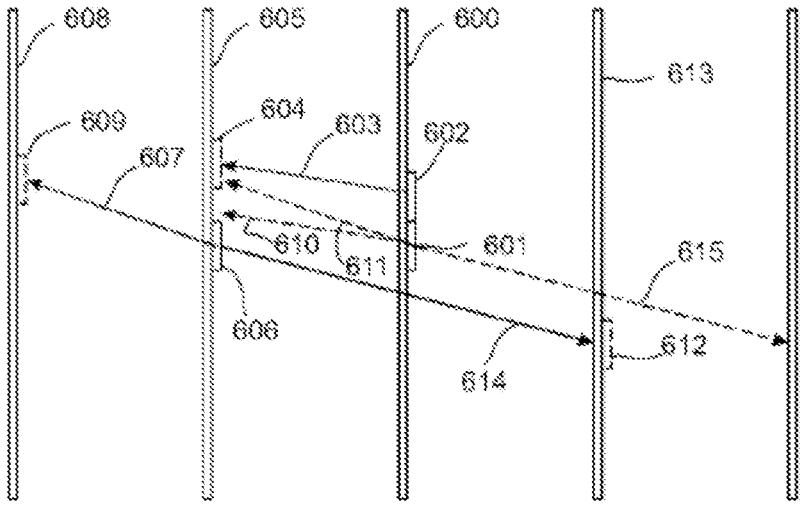
608
605
600
613
609
604
603
602
607
610
611
601
615
606
612
614

Fig. 6b

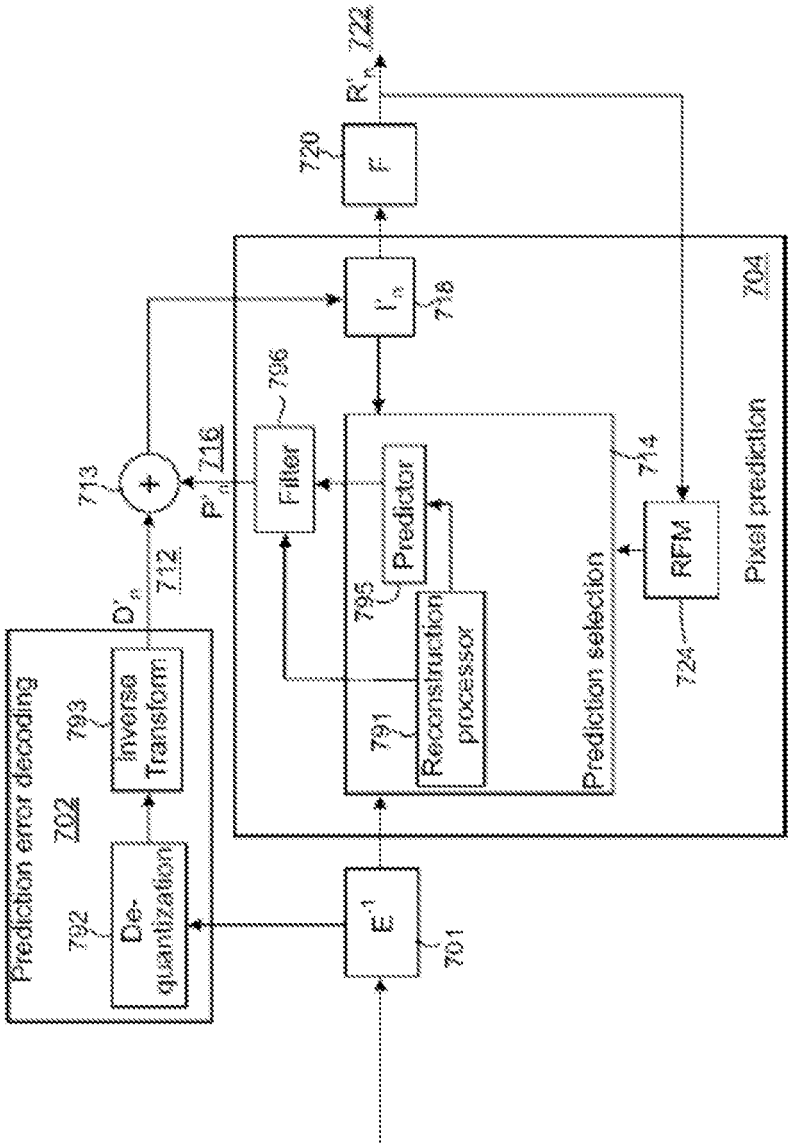
Prediction error decoding
702
792
De-quantization
793
Inverse Transform
D'_n
712
713
P'_n
716
796
Filter
E^{-1}
701
791
Reconstruction processor
795
Predictor
R'_n
718
Prediction selection
714
RFM
724
Pixel prediction
704
F
720
R'_n
722

Fig. 7

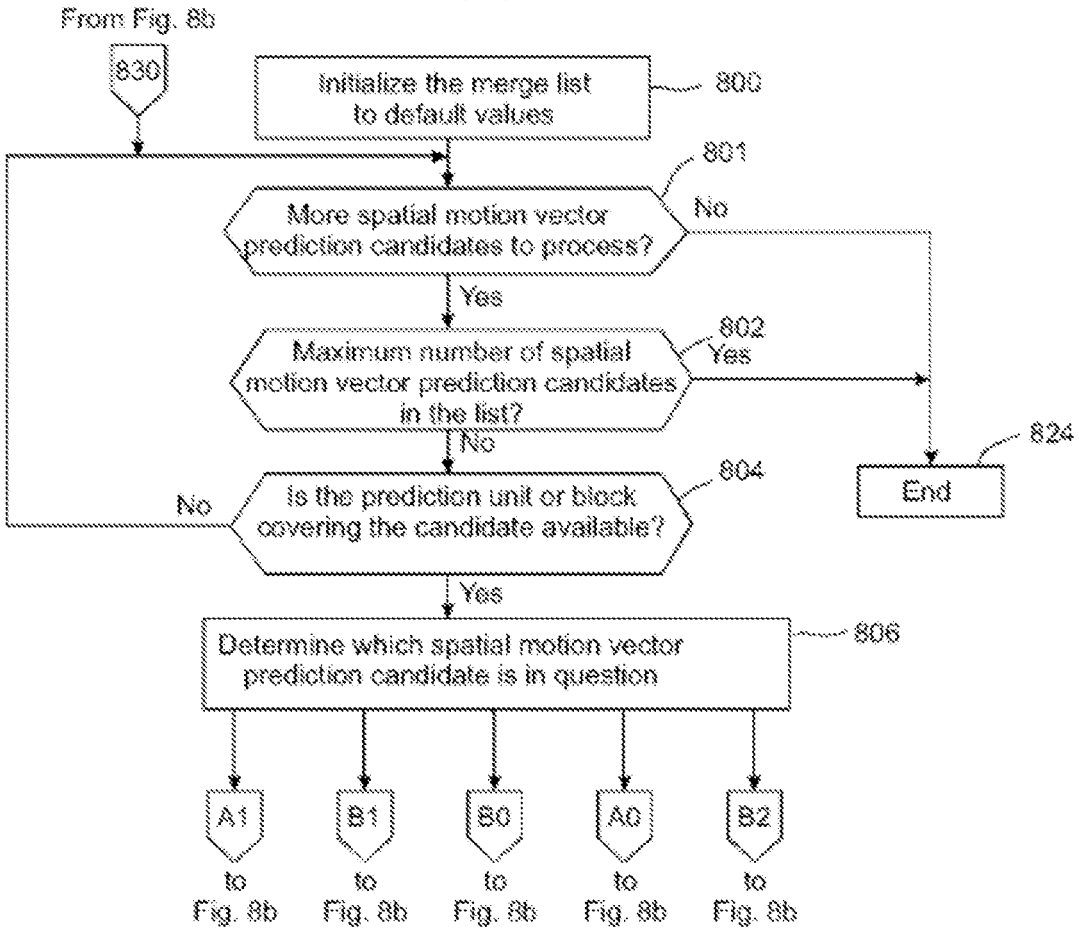
From Fig. 8b
830
Initialize the merge list to default values
800
801
More spatial motion vector prediction candidates to process?
No
Yes
802
Maximum number of spatial motion vector prediction candidates in the list?
Yes
No
824
End
804
Is the prediction unit or block covering the candidate available?
No
Yes
806
Determine which spatial motion vector prediction candidate is in question
A1
B1
B0
A0
B2
to Fig. 8b
to Fig. 8b
to Fig. 8b
to Fig. 8b
to Fig. 8b

Fig. 8a

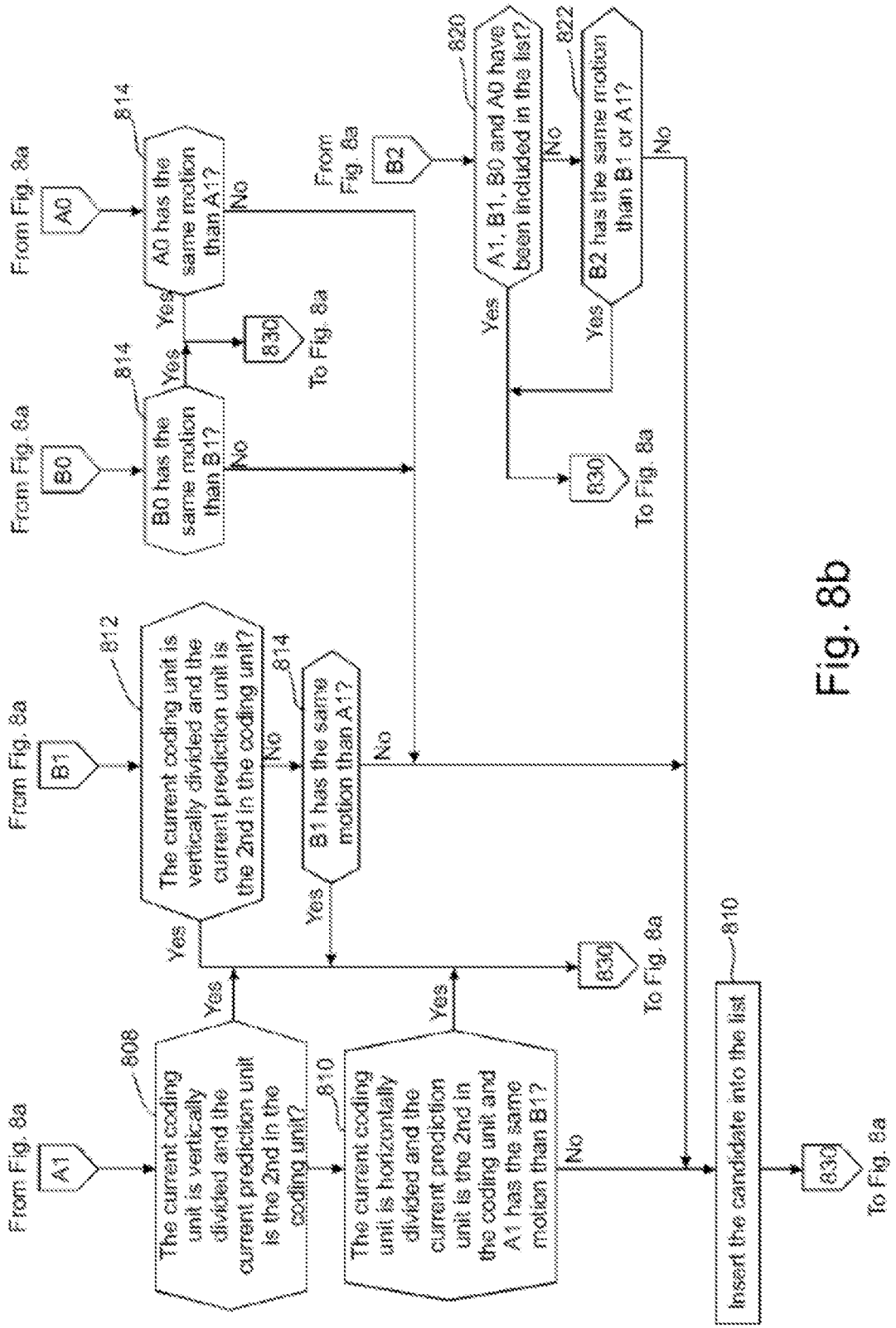
From Fig. 8a
A1
808
The current coding unit is vertically divided and the current prediction unit is the 2nd in the coding unit?
Yes
810
The current coding unit is horizontally divided and the current prediction unit is the 2nd in the coding unit and A1 has the same motion than B1?
Yes
No
From Fig. 8a
B1
812
The current coding unit is vertically divided and the current prediction unit is the 2nd in the coding unit?
Yes
No
814
B1 has the same motion than A1?
Yes
No
830
To Fig. 8a
From Fig. 8a
B0
814
B0 has the same motion than B1?
Yes
No
830
To Fig. 8a
From Fig. 8a
A0
814
A0 has the same motion than A1?
Yes
No
830
To Fig. 8a
From Fig. 8a
B2
820
A1, B1, B0 and A0 have been included in the list?
Yes
No
822
B2 has the same motion than B1 or A1?
Yes
No
830
To Fig. 8a
810
Insert the candidate into the list
830
To Fig. 8a

Fig. 8b

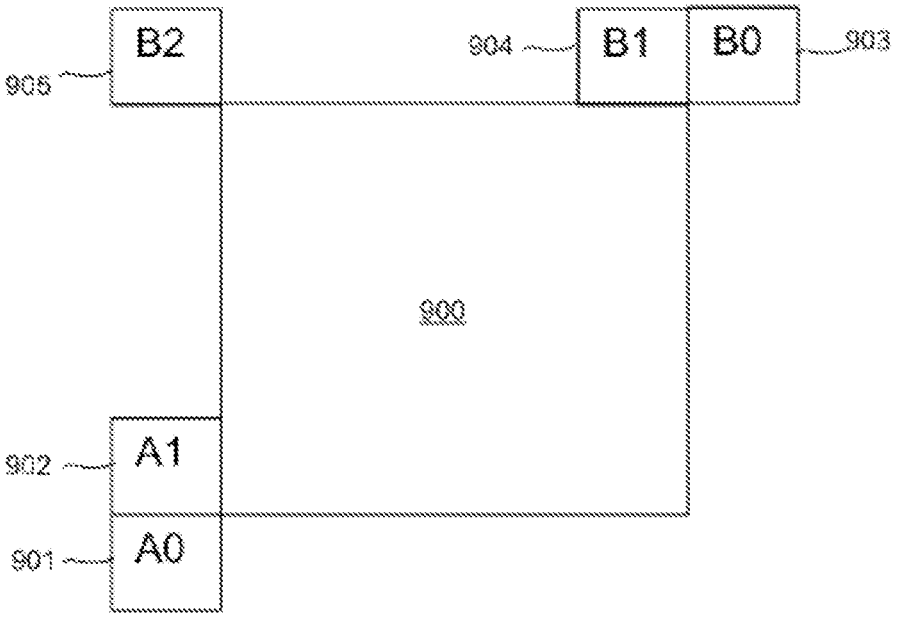

Fig. 9

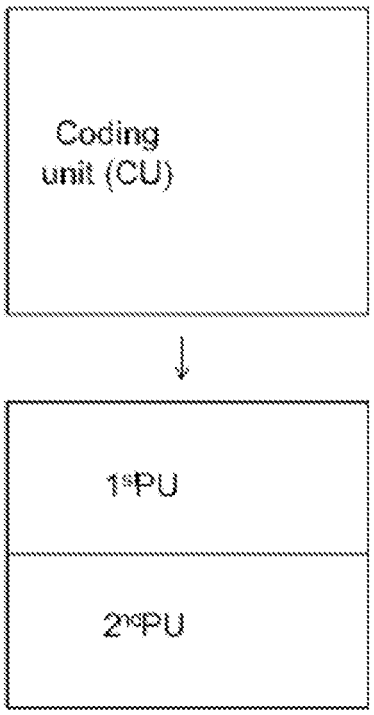

Fig. 10a

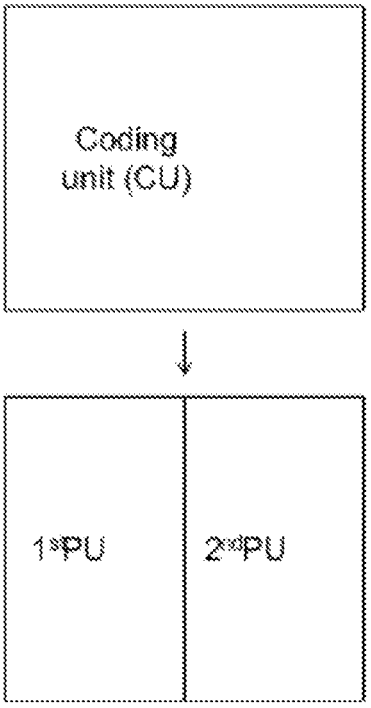

Fig. 10b

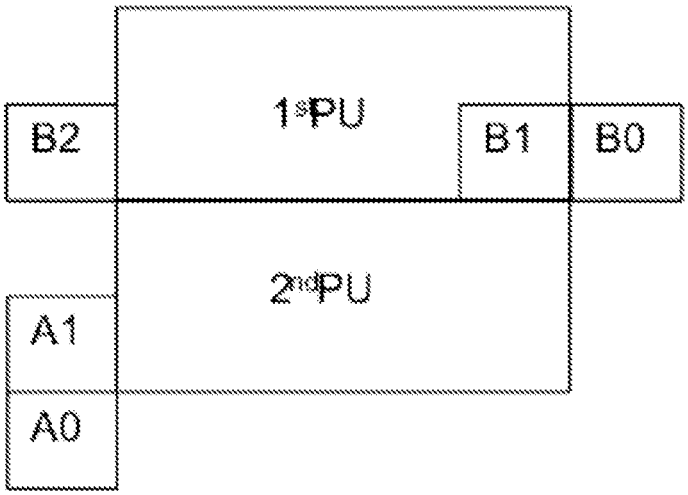

Fig. 11a

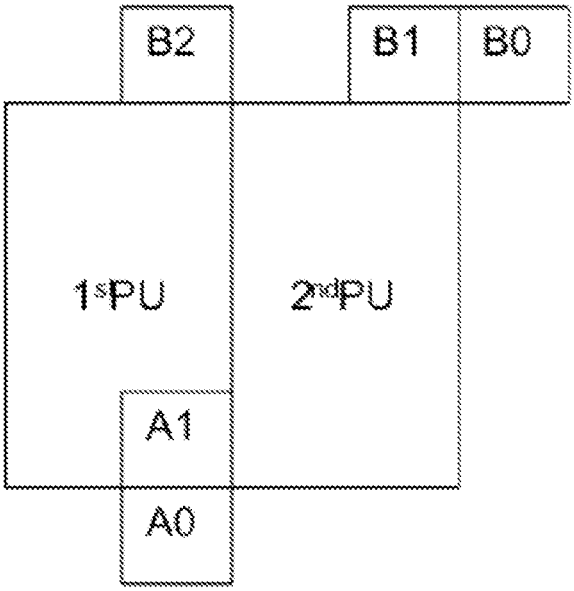

Fig. 11b

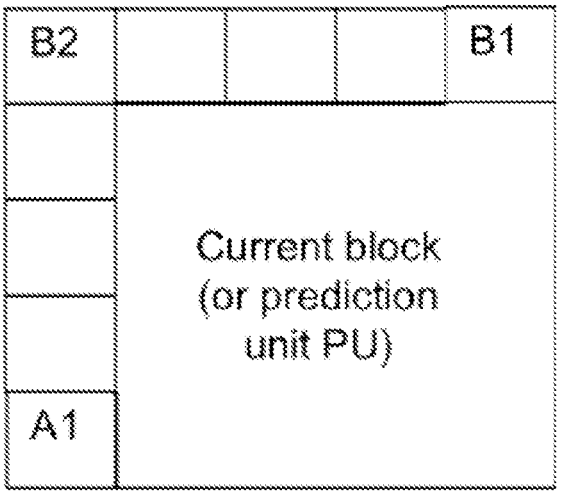

Fig. 12

Europäisches Patentamt
European Patent Office
Office européen des brevets

European Patent Office
Postbus 5818
2280 HV Rijswijk
NETHERLANDS
Tel: +31 70 340 2040
Fax: +31 70 340 3016

Application No.: 12 845 839.5

IV.2. Patent classification

The classification has been changed. It now is as follows:

INV. H04N19/52

IV.3. Title of the invention

The title has been changed. It now is as follows:

VIDEOKODIERUNGSVERFAHREN UND -VORRICHTUNG

METHOD AND APPARATUS FOR VIDEO CODING

PROCÉDÉ DE CODAGE VIDÉO ET APPAREIL ASSOCIÉ

IV.4. Documentation

16-04-2020
Date

Ferré, Pierre
Chairman

Mayer, Claudia
1st examiner

André, Thomas
2nd examiner

Enclosure(s):

Amazon.com, Inc., Amazon.com Services LLC - Ex. 1017, Page 000443

Europäisches Patentamt
European Patent Office
Office européen des brevets

European Patent Office
Postbus 5818
2280 HV Rijswijk
NETHERLANDS
Tel: +31 70 340 2040
Fax: +31 70 340 3016

Berggren Oy, Tampere
Visiokatu 1
33720 Tampere
FINLANDE

Formalities Officer
Name: Delimon, Krista
Tel: +31 70 340 - 4446
or call
+31 (0)70 340 45 00

Application No.	Ref.	Date
12 845 839.5 - 1209	TP109764EP	28.04.2020
Applicant Nokia Technologies Oy		

Communication under Rule 71(3) EPC

1. Intention to grant

You are informed that the examining division intends to grant a European patent on the basis of the above application, with the text and drawings and the related bibliographic data as indicated below.

A copy of the relevant documents is enclosed.

1.1 In the text for the Contracting States:
AL AT BE BG CH CY CZ DE DK EE ES FI FR GB GR HR HU IE IS IT LI LT LU LV MC MK MT NL NO PL PT RO RS SE SI SK SM TR

Description, Pages

1-3, 8-14, 16-27	as published	
15	filed in electronic form on	20-01-2017
4, 4a	filed in electronic form on	16-12-2019

Claims, Numbers

1-12	filed in electronic form on	16-12-2019

Drawings, Sheets

1/13-13/13	as published

With the following amendments to the above-mentioned documents proposed by the division

Description, Pages 4, 4a, 27
Delete Previous: 5-7, 28-34

Registered letter
EPO Form 2004C 12.17CXP

Claims, Numbers 1, 6, 9-12

Comments

DESCRIPTION
Page 4: Mention of relevant prior art in the description (Rule 42(1) EPC)
Pages 4(a), 27: Description adapted to amended claims (Art. 84 EPC)
Pages 5-7, 28-34: (PAGE DELETED) - Description adapted to amended claims (Art. 84 EPC)
Page 27: Doubtful extent of protection (Guidelines F-IV, 4.4)
CLAIMS
Pages 1, 4, CLAIMS 1, 6: Incorrect two-part form of claim (Rule 43(1) EPC)
Pages 2, 4, 5, CLAIMS 1, 6: Inconsistency within claim removed (Art. 84 EPC)
Page 5, Claim 9: Deletion of redundant claim (Art. 84 EPC) - the subject-matter of claim 9 is fully comprised in claim 6.
Pages 5, 6, CLAIMS 9-12: Renumbering of claims
Page 6, CLAIMS 10, 12: Amended dependencies due to renumbering of claims.
Page 6, CLAIMS 11, 12: Scope of claim unclear - clarified (Art. 84 EPC)

1.2 Bibliographic data

The title of the invention in the three official languages of the European Patent Office, the international patent classification, the designated contracting states, the registered name(s) of the applicant(s) and the other bibliographic data are shown on **EPO Form 2056** (enclosed).

2. Invitation

You are invited, **within a non-extendable period of four months** of notification of this communication,

2.1 to EITHER approve the <u>text</u> communicated above and verify the <u>bibliographic data</u> (Rule 71(5) EPC)

(1) by filing a translation of the claim(s) in the other two official languages of the EPO

		Fee code	EUR
(2a)	by paying the fee for grant including the fee for publication:	**007**	960.00
	minus any amount already paid (Rule 71a(5) EPC):		0.00
		Total amount:	960.00
(3)	by paying additional claims fees under Rule 71(4) EPC; number of claims fees payable: 0	**016**	0.00
	minus any amount already paid (Rule 71a(5) EPC):		0.00
		Total amount:	0.00

Important: If the translations of the claims and fees have already been filed and paid respectively in reply to a previous communication under Rule 71(3) EPC, e.g. in the case of resumption of examination after approval (see Guidelines C-V, 6), **agreement as to the text to be granted** (Rule 71a(1) EPC) must be expressed within the same time limit (e.g. by approving the text and verifying the bibliographic data, by confirming that grant proceedings can go ahead with the documents on file and/or by stating which translations of the claims already on file are to be used).

Note 1: See "Notes concerning fee payments" below.
Note 2: Any overpaid "minus" amounts will be refunded when the decision to grant (EPO Form 2006A) has been issued.
Note 3: For the calculation of the grant fee under Article 2(2), No. 7, RFees (old fee structure), the number of pages is determined on the basis of a clean copy of the application documents, in which text deleted as a result of any amendments by the examining division is not shown. Such clean copy is made available via on-line file inspection only.

2.2 OR, in the case of disapproval, to request reasoned amendments or corrections to the text communicated above or keep to the latest text submitted by you (Rule 71(6) EPC).

In this case the translations of the claims and fee payments mentioned under point 2.1 above are NOT due.

The terms "amendment(s)" and "correction(s)" refer only to amendments or corrections of the application documents and not of other documents (e.g. bibliographic data, the designation of the inventor, etc.).

If filing amendments, you must identify them and indicate the basis for them in the application as filed. Failure to meet either requirement may lead to a communication from the examining division requesting that you correct this deficiency (Rule 137(4) EPC).

2.3 Bibliographic data

Where you request a change or correction of bibliographic data in response to the Rule 71(3) communication, this will **not** cause the sending of a further communication under Rule 71(3) EPC. You will still have to pay the fees and file translations in reply to the Rule 71(3) communication in the case of 2.1 above, unless you also file a reasoned request for amendments or corrections in response to the Rule 71(3) communication (see case 2.2 above).

3. Loss of rights

If neither of the two possible actions above (see points 2.1 or 2.2) is performed in due time, the European patent application will be deemed to be withdrawn (Rule 71(7) EPC).

4. Further procedure

4.1 In the case of point 2.1 above

4.1.1 The decision to grant the European patent will be issued, and the **mention of the grant** of the patent will be published in the European Patent Bulletin, if the requirements concerning the translation of the claims and the payment of all fees are fulfilled and there is agreement as to the text to be granted (Rule 71a(1) EPC).

Note on payment of the renewal fee:
If a renewal fee becomes due before the next possible date for publication of the mention of the grant of the European patent, publication will be effected only after the renewal fee and any additional fee have been paid (Rule 71a(4) EPC).

Under Article 86(2) EPC, the obligation to pay renewal fees to the European Patent Office terminates with the payment of the renewal fee due in respect of the year in which the mention of the grant of the European patent is published.

Note on payment of the designation fee(s):
If the designation fee(s) become(s) due after the communication under Rule 71(3) EPC, the mention of the grant of the European patent will not be published until these fees have been paid (Rule 71a(3) EPC).

4.1.2 After publication, the **European patent specification** can be downloaded free of charge from the EPO publication server https://data.epo.org/publication-server.

4.1.3 Filing of translations in the contracting states

As regards translation requirements prescribed by the contracting states under Article 65(1) EPC, please consult the website of the European Patent Office
www.epo.org ➞Law & practice ➞Legal texts, National law relating to the EPC
www.epo.org ➞Law & practice ➞All Legal texts ➞London Agreement

In the case of a valid extension or validation

As regards translation requirements prescribed by the extension or validation states, please consult the website of the European Patent Office
www.epo.org ➞Law & practice ➞Legal texts, National law relating to the EPC

Failure to supply a prescribed translation in a contracting state, or in an extension or validation state may result in the patent being deemed to be void *ab initio* in the state concerned (Art. 65(3) EPC).

4.2 In the case of 2.2 above

If the present communication under Rule 71(3) EPC is based on an auxiliary request and, within the time limit, you maintain the main request or a higher ranking request which is not allowable, the application will be refused (Art. 97(2) EPC).

If the examining division gives its consent to the requested amendments or corrections, it will issue a new communication under Rule 71(3) EPC; otherwise, it shall resume the examination proceedings (Rule 71(6) EPC).

5. Filing of a divisional application

Any divisional application relating to this European patent application must be filed directly with the European Patent Office in Munich, The Hague or Berlin and will be in the language of the proceedings for the present application, or if the latter was not in an official language of the EPO, the divisional application may be filed in the language of the present application as filed (see Article 76(1) and Rule 36(2) EPC). Any such divisional application must be filed while the present application is still pending (Rule 36(1) EPC; Guidelines A-IV, 1.1.1).

6. Notes concerning fee payments

6.1 Making payments

For payments made via deposit account, please note that as from 1 December 2017 debit orders will only be carried out if filed in an electronically processable format (xml), using an accepted means of filing as laid down in the Arrangements for deposit accounts (ADA), published in the Supplementary publication in the Official Journal.

All relevant information related to the modes of payment of fees to the EPO can be retrieved from the EPO website at "**Making Payments**".

6.2 Information concerning fee amounts

Procedural fees are usually adjusted every two years, on even years, with effect from 1 April. Therefore, before making a payment, parties should verify the amounts actually due on the date of payment using the applicable version of the Schedule of fees and expenses, published as a Supplement to the Official Journal of the EPO, available on the EPO website (**www.epo.org**) at **www.epo.org/schedule-of-fees**. The "Schedule of fees" table allows the viewing, downloading and searching of individual fee amounts, both current and previous.

6.3 Note to users of the automatic debiting procedure

The fee for grant, including the fee for publication, and any additional claims fees due under Rule 71(4) EPC will be debited automatically on the date of filing of the translations of the claims, or on the last day of the period of this communication. However, if the designation fee(s) become(s) due as set out in Rule 71a(3) EPC and/or a renewal fee becomes due as set out in Rule 71a(4) EPC, these should be paid separately by another permitted way of payment in order not to delay the publication of the mention of the grant. The same applies in these circumstances to the payment of extension and validation fees. The same applies in these circumstances to the payment of extension and validation fees.

Note: If a waiver is expressed in response to a Rule 71(3) communication (see OJ EPO 2015, A52), the fee for grant, including the fee for publication/printing, and any additional claims fees will not be debited automatically. These fees must be paid separately by another means of payment allowed under the Rules relating to Fees.

Examining Division:

Chairman:	Ferré, Pierre
2nd Examiner:	André, Thomas
1st Examiner:	Mayer, Claudia

Europäisches Patentamt • European Patent Office • Office européen des brevets

Delimon, Krista
For the Examining Division
Tel. No.: +31 70 340 - 4446 **Branch at The Hague**

Enclosures: Text intended for grant

EPO Form 2056

Europäisches Patentamt
European Patent Office
Office européen des brevets

European Patent Office
Postbus 5818
2280 HV Rijswijk
NETHERLANDS
Tel: +31 70 340 2040
Fax: +31 70 340 3016

Annex to EPO Form 2004, Communication pursuant to Rule 71(3) EPC

Bibliographical data of European patent application No. 12 845 839.5

For the intended grant of the European patent, the bibliographical data are set out below, for information:

Title of invention:
- VIDEOKODIERUNGSVERFAHREN UND -VORRICHTUNG
- METHOD AND APPARATUS FOR VIDEO CODING
- PROCÉDÉ DE CODAGE VIDÉO ET APPAREIL ASSOCIÉ

Classification: INV. H04N19/52

Date of filing: 02.11.2012

Priority claimed: US / 04.11.2011 / USP201161555703

Contracting States* for which fees have been paid: AL AT BE BG CH CY CZ DE DK EE ES FI FR GB GR HR HU IE IS IT LI LT LU LV MC MK MT NL NO PL PT RO RS SE SI SK SM TR

Extension States* for which fees have been paid:

Validation States* for which fees have been paid:

Applicant(s)**:
Nokia Technologies Oy
Karakaari 7
02610 Espoo
FI

Inventor(s):
BICI, Mehmet Oguz
Tammelan puistokatu 1-3 D 46
33500 Tampere
FI

LAINEMA, Jani
Kisakentänkatu 12 B 6
33230 Tampere
FI

UGUR, Kemal
Lapintie 6D 25
33100 Tampere
FI

*) If the time limit for the payment of designation fees according to Rule 39(1) EPC has not yet

Europäisches Patentamt
European Patent Office
Office européen des brevets

European Patent Office
Postbus 5818
2280 HV Rijswijk
NETHERLANDS
Tel: +31 70 340 2040
Fax: +31 70 340 3016

expired and the applicant has not withdrawn any designation, **all Contracting States/Extension States/Validation States** are currently still deemed to be designated.
See also Rule 71a(3) EPC and, if applicable, the above Note to users of the automatic debiting procedure.

**) If two or more applicants have designated different Contracting States, this is indicated here.

Amazon.com, Inc., Amazon.com Services LLC - Ex. 1017, Page 000450

ANSPRÜCHE

1. Verfahren, das Folgendes umfasst:

Empfangen eines Blocks (900) von Pixeln, der eine Vorhersageeinheit einschließt;

Bestimmen eines Satzes von Raumbewegungsvektorvorhersagekandidaten, die sich unten links (901), links (902), oben links (905), oben (904) und oben rechts (903) von der Vorhersageeinheit befinden, für den Block (900) von Pixeln; wobei die Raumbewegungsvektorvorhersagekandidaten mit Bewegungsinformationen versehen sind, die mindestens einen Bewegungsvektor und einen Referenzindex umfassen;

Bestimmen eines Untersatzes von Raumbewegungsvektorvorhersagekandidatenpaaren unter existierenden Raumbewegungsvektorvorhersagekandidatenpaaren zum Vergleich unter allen verfügbaren Raumbewegungsvektorvorhersagekandidatenpaaren in dem Satz von Raumbewegungsvektorvorhersagekandidaten;

Auswählen eines Raumbewegungsvektorvorhersagekandidaten aus dem Satz von Raumbewegungsvektorvorhersagekandidaten als einen potenziellen Raumbewegungsvektorvorhersagekandidaten, der in eine Mischliste für die Vorhersageeinheit einzuschließen ist;

Überprüfen des Untersatzes von Raumbewegungsvektorvorhersagekandidatenpaaren, um zu bestimmen, welcher andere Raumbewegungsvektorvorhersagekandidat als der ausgewählte Raumbewegungsvektorvorhersagekandidat (610) als zum selben Raumbewegungsvektorvorhersagekandidatenpaar gehörend definiert ist;

Vergleichen von Bewegungsinformationen des ausgewählten Raumbewegungsvektorvorhersagekandidaten mit Bewegungsinformationen des anderen Raumbewegungsvektorvorhersagekandidaten;

wenn der Vergleich anzeigt, dass die Bewegungsvektorinformationen des anderen Raumbewegungsvektorvorher-

sagekandidaten den Bewegungsvektorinformationen des ausgewählten Raumbewegungsvektorvorhersagekandidaten entsprechen, Ausschließen des ausgewählten Raumbewegungsvektorvorhersagekandidaten aus der Mischliste;

wobei das Verfahren ferner das Auswählen eines Bewegungsvektorvorhersagekandidaten aus der Mischliste, um eine Bewegungsvektorvorhersage für dem Block von Pixeln zu repräsentieren, umfasst;

Bestimmen einer maximalen Anzahl von Raumbewegungsvektorvorhersagekandidaten, die in die Mischliste einzuschließen sind;

Begrenzen der Anzahl von Raumbewegungsvektorvorhersagekandidaten in der Mischliste auf kleiner als oder gleich der maximalen Anzahl;

wenn die Anzahl von Raumbewegungsvektorvorhersagekandidaten in der Mischliste kleiner als die maximale Anzahl ist, Überprüfen, ob eine Vorhersageeinheit, zu der der potenzielle Raumbewegungsvektorvorhersagekandidat gehört, für die Bewegungsvorhersage verfügbar ist;

wenn ja, Durchführen von mindestens einem von Folgendem:

wenn sich der potenzielle Raumbewegungsvektorvorhersagekandidat (902) links von der Vorhersageeinheit befindet, Ausschließen des potenziellen Raumbewegungsvektorvorhersagekandidaten (902) aus der Mischliste, wenn eine der folgenden Bedingungen erfüllt ist:

- der empfangene Block von Pixeln ist vertikal in eine erste Vorhersageeinheit und eine zweite Vorhersageeinheit geteilt und die Vorhersageeinheit ist in Codierreihenfolge die zweite Vorhersageeinheit;
- der empfangene Block von Pixeln ist horizontal in eine erste Vorhersageeinheit und eine zweite Vorhersageeinheit geteilt, und wenn die Vorhersageeinheit in Codierreihenfolge die zweite Vorhersageeinheit ist, und der potenzielle

Raumbewegungsvektorvorhersagekandidat (902) hat dieselben Bewegungsvektoren und dieselben Referenzindices wie der Raumbewegungsvektorvorhersagekandidat (904) über der Vorhersageeinheit;

wenn sich der potenzielle Raumbewegungsvektorvorhersagekandidat (904) über der Vorhersageeinheit befindet, Ausschließen des potenziellen Raumbewegungsvektorvorhersagekandidaten (904) aus der Mischliste, wenn eine der folgenden Bedingungen erfüllt ist:

- der empfangene Block von Pixeln ist horizontal in eine erste Vorhersageeinheit und eine zweite Vorhersageeinheit geteilt und die Vorhersageeinheit ist in Codierreihenfolge die zweite Vorhersageeinheit;
- der potenzielle Raumbewegungsvektorvorhersagekandidat (904) hat dieselben Bewegungsvektoren und dieselben Referenzindices wie der Raumbewegungsvektorvorhersagekandidat (902) links von der Vorhersageeinheit;

wenn sich der potenzielle Raumbewegungsvektorvorhersagekandidat (903) über der Vorhersageeinheit rechts vom Raumbewegungsvektorvorhersagekandidaten (904) befindet, Ausschließen des potenziellen Raumbewegungsvektorvorhersagekandidaten (903) aus der Mischliste, wenn der potenzielle Raumbewegungsvektorvorhersagekandidat (903) dieselben Bewegungsvektoren und dieselben Referenzindices hat wie der Raumbewegungsvektorvorhersagekandidat (904) über der Vorhersageeinheit;

wenn sich der potenzielle Raumbewegungsvektorvorhersagekandidat (901) links von der Vorhersageeinheit unter dem Raumbewegungsvektorvorhersagekandidaten (902) befindet, Ausschließen des potenziellen Raumbewegungsvektorvorhersagekandidaten (901) aus der Mischliste, wenn der potenzielle Raumbewegungsvektorvorhersagekandidat (901) dieselben

Bewegungsvektoren und dieselben Referenzindices hat wie der Raumbewegungsvektorvorhersagekandidat (902) links von der Vorhersageeinheit;

wenn der potenzielle Raumbewegungsvektorvorhersagekandidat (905) der Vorhersageeinheit an der Ecke oben links benachbart ist, Ausschließen des potenziellen Raumbewegungsvektorvorhersagekandidaten (905) aus der Mischliste, wenn eine der folgenden Bedingungen erfüllt ist:

- alle anderen Raumbewegungsvektorvorhersagekandidaten (901-904) wurden in die Mischliste eingeschlossen;
- der potenzielle Raumbewegungsvektorvorhersagekandidat (905) hat dieselben Bewegungsvektoren und dieselben Referenzindices wie der Raumbewegungsvektorvorhersagekandidat (904) über der Vorhersageeinheit;
- der potenzielle Raumbewegungsvektorvorhersagekandidat (905) hat dieselben Bewegungsvektoren und dieselben Referenzindices wie der Raumbewegungsvektorvorhersagekandidat (902) links von der Vorhersageeinheit.

2. Verfahren nach Anspruch 1, das das Auswählen von Raumbewegungsvektorvorhersagekandidaten aus dem Satz von Raumbewegungsvektorvorhersagekandidaten als den potenziellen Raumbewegungsvektorvorhersagekandidaten in einer vorbestimmten Reihenfolge umfasst.

3. Verfahren nach Anspruch 1 oder 2, das das Vergleichen von Bewegungsinformationen des potenziellen Raumbewegungsvektorvorhersagekandidaten mit Bewegungsinformationen von höchstens einem anderen Raumbewegungsvektorvorhersagekandidaten des Satzes von Raumbewegungsvektorvorhersagekandidaten umfasst.

4. Verfahren nach einem der Ansprüche 1 bis 3, das das Überprüfen, ob der empfangene Block von Pixeln in eine erste Vorhersageeinheit und eine zweite Vorhersageeinheit in Codierreihenfolge geteilt ist; und wenn ja, Ausschließen des potenziellen Raumbewegungsvektorvorhersagekandidaten aus der Mischliste, wenn die Vorhersageeinheit die zweite Vorhersageeinheit ist, umfasst.

5. Verfahren nach einem der Ansprüche 1 bis 4, das ferner das Einschließen eines Zeitbewegungsvorhersage-kandidaten in die Mischliste umfasst.

6. Verfahren, das Folgendes umfasst:

Empfangen eines codierten Blocks von Pixeln, der eine Vorhersageeinheit einschließt;

Bestimmen eines Satzes von Raumbewegungsvektorvorhersage-kandidaten, die sich unten links (901), links (902), oben links (905), oben (904) und oben rechts (903) von der Vorhersageeinheit befinden, für den codierten Block (900) von Pixeln; wobei die Raumbewegungsvektorvorhersagekandidaten mit Bewegungsinformationen versehen sind, die mindestens einen Bewegungsvektor und einen Referenzindex umfassen;

Bestimmen eines Untersatzes von Raumbewegungsvektor-vorhersagekandidatenpaaren unter existierenden Raumbewegungs-vektorvorhersagekandidatenpaaren zum Vergleich unter allen verfügbaren Raumbewegungsvektorvorhersagekandidatenpaaren in dem Satz von Raumbewegungsvektorvorhersagekandidaten;

Auswählen eines Raumbewegungsvektorvorhersagekandidaten aus dem Satz von Raumbewegungsvektorvorhersagekandidaten als einen potenziellen Raumbewegungsvektorvorhersagekandidaten, der in eine Mischliste für die Vorhersageeinheit einzuschließen ist;

Überprüfen des Untersatzes von Raumbewegungsvektorvorhersagekandidatenpaaren, um zu bestimmen, welcher andere Raumbewegungsvektorvorhersagekandidat als der ausgewählte Raumbewegungsvektorvorhersagekandidat als zum selben Raumbewegungsvektorvorhersagekandidatenpaar gehörend definiert ist;

Vergleichen von Bewegungsinformationen des ausgewählten Raumbewegungsvektorvorhersagekandidaten mit Bewegungsinformationen des anderen Raumbewegungsvektorvorhersagekandidaten;

wenn der Vergleich anzeigt, dass die Bewegungsvektorinformationen des anderen Raumbewegungsvektorvorhersagekandidaten den Bewegungsvektorinformationen des ausgewählten Raumbewegungsvektorvorhersagekandidaten entsprechen, Ausschließen des ausgewählten Raumbewegungsvektorvorhersagekandidaten aus der Mischliste

wobei das Verfahren ferner das Auswählen eines Bewegungsvektorvorhersagekandidaten aus der Mischliste, um eine Bewegungsvektorvorhersage für den empfangenen codierten Block von Pixeln zu repräsentieren, umfasst;

Bestimmen einer maximalen Anzahl von Raumbewegungsvektorvorhersagekandidaten, die in die Mischliste einzuschließen sind;

Begrenzen der Anzahl von Raumbewegungsvektorvorhersagekandidaten in der Mischliste auf kleiner oder gleich der maximalen Anzahl;

wenn die Anzahl von Raumbewegungsvektorvorhersagekandidaten in der Mischliste kleiner als die maximale Anzahl, Überprüfen, ob eine Vorhersageeinheit, zu der der potenzielle Raumbewegungsvektorvorhersagekandidat gehört, für die Bewegungsvorhersage verfügbar ist;

wenn ja, Durchführen von mindestens einem von Folgendem:

wenn sich der potenzielle Raumbewegungsvektorvorhersagekandidat (902) links von der Vorhersageeinheit befindet,

Ausschließen des potenziellen Raumbewegungsvektorvorhersagekandidaten (902) aus der Mischliste, wenn eine der folgenden Bedingungen erfüllt ist:

- der empfangene codierte Block von Pixeln ist vertikal in eine erste Vorhersageeinheit und eine zweite Vorhersageeinheit geteilt und die Vorhersageeinheit ist die zweite Vorhersageeinheit;

- der empfangene codierte Block von Pixeln ist horizontal in eine erste Vorhersageeinheit und eine zweite Vorhersageeinheit geteilt, und wenn die Vorhersageeinheit die zweite Vorhersageeinheit ist, und der potenzielle Raumbewegungsvektorvorhersagekandidat (902) hat dieselben Bewegungsvektoren und dieselben Referenzindices wie der Raumbewegungsvektorvorhersagekandidat (904) über der Vorhersageeinheit;

wenn sich der potenzielle Raumbewegungsvektorvorhersagekandidat (904) über der Vorhersageeinheit befindet, Ausschließen des potenziellen Raumbewegungsvektorvorhersagekandidaten (904) aus der Mischliste, wenn eine der folgenden Bedingungen erfüllt ist:

- der empfangene codierte Block von Pixeln ist horizontal in eine erste Vorhersageeinheit und eine zweite Vorhersageeinheit geteilt und die Vorhersageeinheit ist in Decodierreihenfolge die zweite Vorhersageeinheit;

- der potenzielle Raumbewegungsvektorvorhersagekandidat (904) hat dieselben Bewegungsvektoren und dieselben Referenzindices wie der Raumbewegungsvektorvorhersagekandidat (902) links von der Vorhersageeinheit;

wenn sich der potenzielle Raumbewegungsvektorvorhersagekandidat (903) über der Vorhersageeinheit rechts vom Raumbewegungsvektorvorhersagekandidaten (904) befindet, Ausschließen des potenziellen Raumbewegungsvektorvorhersagekandidaten (903) aus der Mischliste, wenn der potenzielle

Raumbewegungsvektorvorhersagekandidat dieselben Bewegungsvektoren und dieselben Referenzindices hat wie der Raumbewegungsvektorvorhersagekandidat (904) über der Vorhersageeinheit;

wenn sich der potenzielle Raumbewegungsvektorvorhersagekandidat (901) links von der Vorhersageeinheit unter dem Raumbewegungsvektorvorhersagekandidaten (902) befindet, Ausschließen des potenziellen Raumbewegungsvektorvorhersagekandidaten (901) aus der Mischliste, wenn der potenzielle Raumbewegungsvektorvorhersagekandidat (901) dieselben Bewegungsvektoren und dieselben Referenzindices hat wie der Raumbewegungsvektorvorhersagekandidat (902) links von der Vorhersageeinheit;

wenn der potenzielle Raumbewegungsvektorvorhersagekandidat (905) der Vorhersageeinheit an der Ecke oben links benachbart ist, Ausschließen des potenziellen Raumbewegungsvektorvorhersagekandidaten (905) aus der Mischliste, wenn eine der folgenden Bedingungen erfüllt ist:

- alle anderen Raumbewegungsvektorvorhersagekandidaten (901-904) wurden in die Mischliste eingeschlossen;
- der potenzielle Raumbewegungsvektorvorhersagekandidat (905) hat dieselben Bewegungsvektoren und dieselben Referenzindices wie der Raumbewegungsvektorvorhersagekandidat (904) über der Vorhersageeinheit;
- der potenzielle Raumbewegungsvektorvorhersagekandidat (905) hat dieselben Bewegungsvektoren und dieselben Referenzindices wie der Raumbewegungsvektorvorhersagekandidat (902) links von der Vorhersageeinheit.

7. Verfahren nach Anspruch 6, das das Vergleichen von Bewegungsinformationen des potenziellen Raumbewegungsvektorvorhersagekandidaten mit Bewegungsinformationen von höchstens einem anderen Raumbewegungsvektorvorhersage-

kandidaten des Satzes von Raumbewegungsvektorvorhersagekandidaten umfasst.

8. Verfahren nach Anspruch 6 oder 7, das das Überprüfen, ob der empfangene codierte Block von Pixeln in eine erste Vorhersageeinheit und eine zweite Vorhersageeinheit in Decodierreihenfolge geteilt ist; und wenn ja, Ausschließen des potenziellen Raumbewegungsvektorvorhersagekandidaten aus der Mischliste, wenn die Vorhersageeinheit die zweite Vorhersageeinheit ist, umfasst.

9. Vorrichtung, die ein Mittel zum Durchführen eines Verfahrens nach einem der Ansprüche 1 bis 5 umfasst.

10. Vorrichtung, die ein Mittel zum Durchführen eines Verfahrens nach einem der Ansprüche 6 bis 8 umfasst.

11. Computerlesbares Speichermedium mit computerlesbaren Anweisungen, die, wenn sie von einem oder mehreren Prozessoren ausgeführt werden, bewirken, dass ein oder mehrere Prozessoren das Verfahren nach einem der Ansprüche 1 bis 5 durchführen.

12. Computerlesbares Speichermedium mit computerlesbaren Anweisungen, die, wenn sie von einem oder mehreren Prozessoren ausgeführt werden, bewirken, dass ein oder mehrere Prozessoren das Verfahren nach einem der Ansprüche 6 bis 8 durchführen.

REVENDICATIONS

1. Procédé comprenant :

la réception d'un bloc (900) de pixels comportant une unité de prédiction ;

la détermination, pour le bloc (900) de pixels, d'un ensemble de candidats de prédiction de vecteurs de mouvement spatial situés en dessous à gauche (901), à gauche (902), au-dessus à gauche (905), au-dessus (904) et au-dessus à droite (903) de l'unité de prédiction ; les candidats de prédiction de vecteurs de mouvement spatial étant pourvus d'informations de mouvement comprenant au moins un vecteur de mouvement et un indice de référence ;

la détermination d'un sous-ensemble de paires de candidats de prédiction de vecteur de mouvement spatial parmi de paires de candidats de prédiction de vecteur de mouvement spatial existantes pour une comparaison de toutes les paires de candidats de prédiction de vecteur de mouvement spatial disponibles dans l'ensemble de candidats de prédiction de vecteurs de mouvement spatial ;

la sélection d'un candidat de prédiction de vecteur de mouvement spatial dans l'ensemble de candidats de prédiction de vecteurs de mouvement spatial comme candidat potentiel de prédiction de vecteur de mouvement spatial à inclure dans une liste de fusion pour l'unité de prédiction ;

l'examen du sous-ensemble de paires de candidats de prédiction de vecteur de mouvement spatial pour déterminer quel autre candidat de prédiction de vecteur de mouvement spatial est défini comme appartenant à la même paire de candidats de prédiction de vecteur de mouvement spatial que le candidat de prédiction de vecteur de mouvement spatial sélectionné (610) ;

la comparaison des informations de mouvement du candidat de prédiction de vecteur de mouvement spatial sélectionné avec les informations de mouvement de l'autre candidat de prédiction de vecteur de mouvement spatial ;

si la comparaison indique que les informations de vecteur de mouvement de l'autre candidat de prédiction de vecteur de mouvement spatial correspondent aux informations de vecteur de mouvement du candidat de prédiction de vecteur de mouvement spatial sélectionné, l'exclusion du candidat de prédiction de vecteur de mouvement spatial sélectionné de la liste de fusion ;

dans lequel le procédé comprend en outre la sélection d'un premier candidat de prédiction de vecteur de mouvement dans la liste de fusion pour représenter une prédiction de vecteur de mouvement pour le bloc de pixels ;

la détermination d'un nombre maximal de candidats de prédiction de vecteurs de mouvement spatial à inclure dans une liste de fusion ;

la limitation du nombre de candidats de prédiction de vecteurs de mouvement spatial dans la liste de fusion inférieure ou égale au nombre maximal ;

si le nombre de candidats de prédiction de vecteurs de mouvement spatial dans la liste de fusion est inférieur au nombre maximal, le fait d'examiner si une unité de prédiction à laquelle le candidat potentiel de prédiction de vecteur de mouvement spatial appartient est disponible pour la prédiction de mouvement ;

si c'est le cas, la réalisation d'au moins l'une des actions suivantes :

si le candidat potentiel de prédiction de vecteur de mouvement spatial (902) est situé sur le côté gauche de l'unité de prédiction, l'exclusion du candidat potentiel de prédiction de vecteur de mouvement spatial (902) de la liste

de fusion si l'une quelconque des conditions suivantes est remplie :

- le bloc reçu de pixels est divisé verticalement en une première unité de prédiction et une deuxième unité de prédiction, et l'unité de prédiction est la deuxième unité de prédiction dans l'ordre de codage ;

- le bloc reçu de pixels est divisé horizontalement en une première unité de prédiction et une deuxième unité de prédiction, et si l'unité de prédiction est la deuxième unité de prédiction dans l'ordre de codage, et le candidat potentiel de prédiction de vecteur de mouvement spatial (902) a les mêmes vecteurs de mouvement et les mêmes indices de référence que le candidat de prédiction de vecteur de mouvement spatial (904) au-dessus de l'unité de prédiction ;

si le candidat potentiel de prédiction de vecteur de mouvement spatial (904) est situé au-dessus de l'unité de prédiction, l'exclusion du candidat potentiel de prédiction de vecteur de mouvement spatial (904) de la liste de fusion si l'une quelconque des conditions suivantes est remplie :

- le bloc reçu de pixels est divisé horizontalement en une première unité de prédiction et une deuxième unité de prédiction, et l'unité de prédiction est la deuxième unité de prédiction dans l'ordre de codage ;

- le candidat potentiel de prédiction de vecteur de mouvement spatial (904) a les mêmes vecteurs de mouvement et les mêmes indices de référence que le candidat de prédiction de vecteur de mouvement spatial (902) sur le côté gauche de l'unité de prédiction ;

si le candidat potentiel de prédiction de vecteur de mouvement spatial (903) est situé sur le côté droit du candidat de prédiction de vecteur de mouvement spatial (904) au-dessus de l'unité de prédiction, l'exclusion du candidat potentiel de prédiction de vecteur de mouvement spatial (903)

de la liste de fusion si le candidat potentiel de prédiction de vecteur de mouvement spatial (903) a les mêmes vecteurs de mouvement et les mêmes indices de référence que le candidat de prédiction de vecteur de mouvement spatial (904) au-dessus de l'unité de prédiction ;

si le candidat potentiel de prédiction de vecteur de mouvement spatial (901) est situé en dessous du candidat de prédiction de vecteur de mouvement spatial (902) sur le côté gauche de l'unité de prédiction, l'exclusion du candidat potentiel de prédiction de vecteur de mouvement spatial (901) de la liste de fusion si le candidat potentiel de prédiction de vecteur de mouvement spatial (901) a les mêmes vecteurs de mouvement et les mêmes indices de référence que le candidat de prédiction de vecteur de mouvement spatial (902) sur le côté gauche de l'unité de prédiction ;

si le candidat potentiel de prédiction de vecteur de mouvement spatial (905) est dans le coin au-dessus de la gauche, à côté de l'unité de prédiction, l'exclusion du candidat potentiel de prédiction de vecteur de mouvement spatial (905) de la liste de fusion si l'une quelconque des conditions suivantes est remplie :

- tous les autres candidats de prédiction de vecteurs de mouvement spatial (901—904) ont été inclus dans la liste de fusion ;

- le candidat potentiel de prédiction de vecteur de mouvement spatial (905) a les mêmes vecteurs de mouvement et les mêmes indices de référence que le candidat de prédiction de vecteur de mouvement spatial (904) au-dessus de l'unité de prédiction ;

le candidat potentiel de prédiction de vecteur de mouvement spatial (905) a les mêmes vecteurs de mouvement et les mêmes indices de référence que le candidat de prédiction

de vecteur de mouvement spatial (902) sur le côté gauche de l'unité de prédiction.

2. Procédé selon la revendication 1 comprenant la sélection des candidats de prédiction de vecteurs de mouvement spatial dans l'ensemble de candidats de prédiction de vecteurs de mouvement spatial comme candidat potentiel de prédiction de vecteur de mouvement spatial dans un ordre prédéterminé.

3. Procédé selon la revendication 1 ou 2, comprenant la comparaison des informations de mouvement du candidat potentiel de prédiction de vecteur de mouvement spatial avec les informations de mouvement d'au plus un autre candidat de prédiction de vecteur de mouvement spatial de l'ensemble de candidats de prédiction de vecteurs de mouvement spatial.

4. Procédé selon l'une quelconque des revendications 1 à 3 comprenant le fait d'examiner si le bloc reçu de pixels est divisé en une première unité de prédiction et une deuxième unité de prédiction dans l'ordre de codage ; si c'est le cas, l'exclusion du candidat potentiel de prédiction de vecteur de mouvement spatial de la liste de fusion si l'unité de prédiction est la deuxième unité de prédiction.

5. Procédé selon l'une quelconque des revendications 1 à 4 comprenant l'inclusion d'un candidat de prédiction de mouvement temporel dans la liste de fusion.

6. Procédé comprenant les étapes consistant à :

la réception d'un bloc de pixels codé comportant une unité de prédiction ;

la détermination, pour le bloc codé (900) de pixels, d'un ensemble de candidats de prédiction de vecteurs de mouvement

spatial situés en dessous à gauche (901), à gauche (902), au-dessus à gauche (905), au-dessus (904) et au-dessus à droite (903) de l'unité de prédiction ; les candidats de prédiction de vecteurs de mouvement spatial étant pourvus d'informations de mouvement comprenant au moins un vecteur de mouvement et un indice de référence ;

la détermination d'un sous-ensemble de paires de candidats de prédiction de vecteur de mouvement spatial parmi de paires de candidats de prédiction de vecteur de mouvement spatial existantes pour une comparaison de toutes les paires de candidats de prédiction de vecteur de mouvement spatial disponibles dans l'ensemble de candidats de prédiction de vecteurs de mouvement spatial ;

la sélection d'un candidat de prédiction de vecteur de mouvement spatial dans l'ensemble de candidats de prédiction de vecteurs de mouvement spatial comme candidat potentiel de prédiction de vecteur de mouvement spatial à inclure dans une liste de fusion pour l'unité de prédiction ;

l'examen du sous-ensemble de paires de candidats de prédiction de vecteur de mouvement spatial pour déterminer quel autre candidat de prédiction de vecteur de mouvement spatial est défini comme appartenant à la même paire de candidats de prédiction de vecteur de mouvement spatial que le candidat de prédiction de vecteur de mouvement spatial sélectionné ;

la comparaison des informations de mouvement du candidat de prédiction de vecteur de mouvement spatial sélectionné avec les informations de mouvement de l'autre candidat de prédiction de vecteur de mouvement spatial ;

si la comparaison indique que les informations de vecteur de mouvement de l'autre candidat de prédiction de vecteur de mouvement spatial correspondent aux informations de vecteur de mouvement du candidat de prédiction de vecteur de mouvement

spatial sélectionné, l'exclusion du candidat de prédiction de vecteur de mouvement spatial sélectionné de la liste de fusion ;

dans lequel le procédé comprend en outre la sélection d'un premier candidat de prédiction de vecteur de mouvement dans la liste de fusion pour représenter une prédiction de vecteur de mouvement pour le bloc de pixels codé reçu ;

la détermination d'un nombre maximal de candidats de prédiction de vecteur de mouvement spatial à inclure dans une liste de fusion ;

la limitation du nombre de candidats de prédiction de vecteurs de mouvement spatial dans la liste de fusion inférieure ou égale au nombre maximal ;

si le nombre de candidats de prédiction de vecteurs de mouvement spatial dans la liste de fusion est inférieur au nombre maximal, le fait d'examiner si une unité de prédiction à laquelle le candidat potentiel de prédiction de vecteur de mouvement spatial appartient est disponible pour la prédiction de mouvement ;

si c'est le cas, la réalisation d'au moins l'une des actions suivantes :

si le candidat potentiel de prédiction de vecteur de mouvement spatial (902) est situé sur le côté gauche de l'unité de prédiction, l'exclusion du candidat potentiel de prédiction de vecteur de mouvement spatial (902) de la liste de fusion si l'une quelconque des conditions suivantes est remplie :

- le bloc de pixels codé reçu est divisé verticalement en une première unité de prédiction et une deuxième unité de prédiction, et l'unité de prédiction est la deuxième unité de prédiction ;

- le bloc de pixels codé reçu est divisé horizontalement en une première unité de prédiction et une deuxième unité de

prédiction, et si l'unité de prédiction est la deuxième unité de prédiction, et le candidat potentiel de prédiction de vecteur de mouvement spatial (902) a les mêmes vecteurs de mouvement et les mêmes indices de référence que le candidat de prédiction de vecteur de mouvement spatial (904) au-dessus de l'unité de prédiction ;

si le candidat potentiel de prédiction de vecteur de mouvement spatial (904) est situé au-dessus de l'unité de prédiction, l'exclusion du candidat potentiel de prédiction de vecteur de mouvement spatial (904) de la liste de fusion si l'une quelconque des conditions suivantes est remplie :

- le bloc de pixels codé reçu est divisé horizontalement en une première unité de prédiction et une deuxième unité de prédiction, et l'unité de prédiction est la deuxième unité de prédiction dans l'ordre de décodage ;

- le candidat potentiel de prédiction de vecteur de mouvement spatial (904) a les mêmes vecteurs de mouvement et les mêmes indices de référence que le candidat de prédiction de vecteur de mouvement spatial (902) sur le côté gauche de l'unité de prédiction ;

si le candidat potentiel de prédiction de vecteur de mouvement spatial (903) est situé sur le côté droit du candidat de prédiction de vecteur de mouvement spatial (904) au-dessus de l'unité de prédiction,

l'exclusion du candidat potentiel de prédiction de vecteur de mouvement spatial (903) de la liste de fusion si le candidat potentiel de prédiction de vecteur de mouvement spatial a les mêmes vecteurs de mouvement et les mêmes indices de référence que le candidat de prédiction de vecteur de mouvement spatial (904) au-dessus de l'unité de prédiction ;

si le candidat potentiel de prédiction de vecteur de mouvement spatial (901) est situé en dessous du candidat de prédiction de vecteur de mouvement spatial (902) sur le côté

gauche de l'unité de prédiction, l'exclusion du candidat potentiel de prédiction de vecteur de mouvement spatial (901) de la liste de fusion si le candidat potentiel de prédiction de vecteur de mouvement spatial (901) a les mêmes vecteurs de mouvement et les mêmes indices de référence que le candidat de prédiction de vecteur de mouvement spatial (902) sur le côté gauche de l'unité de prédiction ;

si le candidat potentiel de prédiction de vecteur de mouvement spatial (905) est dans le coin au-dessus de la gauche, à côté de l'unité de prédiction, l'exclusion du candidat potentiel de prédiction de vecteur de mouvement spatial (905) de la liste de fusion si l'une quelconque des conditions suivantes est remplie :

- tous les autres candidats de prédiction de vecteurs de mouvement spatial (901—904) ont été inclus dans la liste de fusion ;

- le candidat potentiel de prédiction de vecteur de mouvement spatial (905) a les mêmes vecteurs de mouvement et les mêmes indices de référence que le candidat de prédiction de vecteur de mouvement spatial (904) au-dessus de l'unité de prédiction ;

- le candidat potentiel de prédiction de vecteur de mouvement spatial (905) a les mêmes vecteurs de mouvement et les mêmes indices de référence que le candidat de prédiction de vecteur de mouvement spatial (902) sur le côté gauche de l'unité de prédiction.

7. Procédé selon la revendication 6 comprenant la comparaison des informations de mouvement du candidat potentiel de prédiction de vecteur de mouvement spatial avec les informations de mouvement d'au plus un autre candidat de prédiction de vecteur de mouvement spatial de l'ensemble de candidats de prédiction de vecteurs de mouvement spatial.

8. Procédé selon la revendication 6 ou 7 comprenant le fait d'examiner si le bloc de pixels codé reçu est divisé en une première unité de prédiction et une deuxième unité de prédiction dans l'ordre de décodage ; si c'est le cas, l'exclusion du candidat potentiel de prédiction de vecteur de mouvement spatial de la liste de fusion si l'unité de prédiction est la deuxième unité de prédiction.

9. Appareil comprenant des moyens pour réaliser un procédé selon l'une quelconque des revendications 1 à 5.

10. Appareil comprenant des moyens pour réaliser un procédé selon l'une quelconque des revendications 6 à 8.

11. Support de stockage lisible par ordinateur comportant des instructions lisibles par ordinateur qui, lorsqu'elles sont exécutées par un ou plusieurs processeurs, amènent un ou plusieurs processeurs à réaliser un procédé de l'une quelconque des revendications 1 à 5.

12. Support de stockage lisible par ordinateur comportant des instructions lisibles par ordinateur qui, lorsqu'elles sont exécutées par un ou plusieurs processeurs, amènent un ou plusieurs processeurs à réaliser un procédé de l'une quelconque des revendications 6 à 8.

Europäisches Patentamt
European Patent Office
Office européen des brevets

Letter accompanying subsequently filed items

Representative:
Berggren Oy, Tampere
477
Visiokatu 1
33720 Tampere
Finland

Phone: +358-10 227 2000
Fax: +358-10 227 2662
E-mail: email@berggren.fi

80298 Munich
Germany
Tel. +49(0)89 2399-0 | Fax -4465

P.O. Box 5818
2280 HV Rijswijk
Netherlands
Tel. +31(0)70 340-2040 | Fax -3016

10958 Berlin
Germany
Tel. +49(0)30 25901-0 | Fax -840

The document(s) listed below is (are) subsequently filed documents pertaining to the following application:

Application number	12845839.5
Applicant's or representative's reference	TP109764EP

	Description of document	Original file name	Assigned file name
1	French translations of the claims	FR translation of claims TP109764EP.pdf	CLMSTRAN-FR-1.pdf
2	German translations of the claims	DE translation of claims TP109764EP.pdf	CLMSTRAN-DE-1.pdf

	Fees	Factor applied	Fee schedule	Amount to be paid
15-1	007 Fee for grant, including fee for publication of the European patent specification (R71(3))	1	960.00	960.00
	Total:		**EUR**	**960.00**

	Payment	
1	Method of payment	Debit from deposit account
	Currency:	EUR
	The European Patent Office is hereby authorised, to debit from the deposit account with the EPO any fees and costs indicated on the fees page.	
	Deposit account number:	28150007
	Account holder:	Berggren Oy, Tampere
2	Refund/Reimburserment	
	Reimbursement (if any) to be made to EPO deposit account:	28150007
	Account holder:	Berggren Oy, Tampere

Signatures

Place:	**Tampere**
Date:	**27 August 2020**
Signed by:	**Timo Pursiainen 36563**

Association:	Berggren Oy, Tampere
Representative name:	Timo Pursiainen
Capacity:	(Representative)

Europäisches Patentamt
European Patent Office
Office européen des brevets

Acknowledgement of receipt

We hereby acknowledge receipt of the following subsequently filed document(s):

Submission number	8958745
Application number	EP12845839.5
Date of receipt	27 August 2020
Receiving Office	European Patent Office, The Hague
Your reference	TP109764EP
Applicant	All applicants as on file
Documents submitted	package-data.xml epf1038.pdf (2 p.) CLMSTRAN-DE-1.pdf\DE translation of claims TP109764EP.pdf (9 p.) ep-sfd-request.xml CLMSTRAN-FR-1.pdf\FR translation of claims TP109764EP.pdf (10 p.)
Submitted by	CN=Timo Pursiainen 36563
Method of submission	Online
Date and time receipt generated	27 August 2020, 09:41 (CEST)
Message Digest	29:32:3A:68:84:C1:16:A6:9B:A0:5B:9E:86:B6:E2:7F:32:01:CA:66

/European Patent Office/

Amazon.com, Inc., Amazon.com Services LLC - Ex. 1017, Page 000472

Europäisches Patentamt
European Patent Office
Office européen des brevets

European Patent Office
80298 MUNICH
GERMANY

Questions about this communication ?
Contact Customer Services at www.epo.org/contact

Berggren Oy, Tampere
Visiokatu 1
33720 Tampere
FINLANDE

Date
10.09.20

Reference	Application No./Patent No.
TP109764EP	12845839.5 - 1209 / 2774375
Applicant/Proprietor	
Nokia Technologies Oy	

Decision to grant a European patent pursuant to Article 97(1) EPC

Following examination of European patent application No. 12845839.5 a European patent with the title and the supporting documents indicated in the communication pursuant to Rule 71(3) EPC (EPO Form 2004C) or in the information (EPO Form 2004W, cf. Notice from the EPO dated 8 June 2015, OJ EPO 2015, A52) dated 28.04.20 is hereby granted in respect of the designated Contracting States.

Patent No. : 2774375
Date of filing : 02.11.12
Priority claimed : 04.11.11/USP201161555703

Designated Contracting States and Proprietor(s) : AL AT BE BG CH CY CZ DE DK EE ES FI FR GB GR HR HU IE IS IT LI LT LU LV MC MK MT NL NO PL PT RO RS SE SI SK SM TR
Nokia Technologies Oy
Karakaari 7
02610 Espoo/FI

This decision will take effect on the date on which the European Patent Bulletin mentions the grant (Art. 97(3) EPC).

The mention of the grant will be published in European Patent Bulletin 20/41 of 07.10.20.

Examining Division

Mayer, Claudia André, Thomas Ferré, Pierre

Europäisches Patentamt • European Patent Office • Office européen des brevets

Registered letter to EPO postal service: 04.09.20

Amazon.com, Inc., Amazon.com Services LLC - Ex. 1017, Page 000473

ANMERKUNG ZUR ENTSCHEIDUNG ÜBER DIE ERTEILUNG
EINES EUROPÄISCHEN PATENTS (EPA Form 2006)

1. **EPA Informationsbroschüre "Nationales Recht zum EPÜ"**
Diese Broschüre enthält nützliche Informationen zu den formalen Erfordernissen und den Handlungen, die vor den Patentbehörden der Vertragsstaaten vorzunehmen sind, um Rechte in diesen Staaten zu erlangen. Da diese Handlungen einem ständigen Wandel unterworfen sind, sollte immer nur die neueste Ausgabe der Broschüre benutzt werden. Nachträgliche Informationen werden im Amtsblatt veröffentlicht.

2. **Übersetzung der europäischen Patentschrift nach Artikel 65 (1) des Europäischen Patentübereinkommens**
Sie werden erneut darauf hingewiesen, dass bestimmte Vertragsstaaten nach Artikel 65 (1) EPÜ eine Übersetzung der europäischen Patentschrift verlangen; hierauf wird in der Mitteilung gemäß Regel 71 (5) EPÜ verwiesen. Die Nichteinreichung dieser Übersetzung kann zur Folge haben, dass das Patent in dem betreffenden Staat/in den betreffenden Staaten als von Anfang an nicht eingetreten gilt. Weitere Einzelheiten entnehmen Sie bitte der oben genannten Broschüre.

3. **Zahlung von Jahresgebühren für europäische Patente**
Nach Artikel 141 EPÜ können "nationale" Jahresgebühren für das europäische Patent für die Jahre erhoben werden, die an das Jahr anschließen, in dem der Hinweis auf die Erteilung des europäischen Patents im "Europäischen Patentblatt" bekanntgemacht wird. Weitere Einzelheiten entnehmen Sie bitte der oben genannten Broschüre.

NOTE RELATING TO THE DECISION TO GRANT A
EUROPEAN PATENT (EPO Form 2006)

1. **EPO Information Brochure "National law relating to the EPC"**
This brochure provides useful information regarding formal requirements and the steps to be taken before the patent authorities of the Contracting States in order to acquire rights in those states. Since the necessary steps are subject to change the latest edition of the brochure should always be used. Subsequent information is published in the Official Journal.

2. **Translation of the European patent application under Article 65(1) of the European Patent Convention**
Your attention is again drawn to the requirements regarding translation of the European patent specification laid down by a number of Contracting States under Article 65(1) EPC, to which reference is made in the communication under Rule 71(5) EPC. Failure to supply such translation(s) may result in the patent being deemed to be void "ab initio" in the State(s) in question. For further details you are recommended to consult the above-mentioned brochure.

3. **Payment of renewal fees for European patents**
Under Article 141 EPC "national" renewal fees in respect of a European patent may be imposed for the years which follow that in which the mention of the grant of the European patent is published in the "European Patent Bulletin". For further details you are recommended to consult the above-mentioned brochure.

REMARQUE RELATIVE A LA DECISION DE DELIVRANCE
D'UN BREVET EUROPEEN (OEB Form 2006)

1. **Brochure d'information de l'OEB "Droit national relatif à la CBE"**
Cette brochure fournit d'utiles renseignements sur les conditions de forme requises et sur les actes à accomplir auprès des offices de brevet des Etats contractants aux fins d'obtenir des droits dans les Etats contractants. Etant donné que les actes indispensables sont susceptibles de modifications, il serait bon de toujours consulter la dernière édition de la brochure. Toute information ultérieure est publiée au Journal Officiel.

2. **Traduction du fascicule du brevet européen en vertu de l'article 65(1) de la Convention sur le brevet européen**
Votre attention est de nouveau attirée sur l'obligation faite par certains Etats contractants, en vertu de l'article 65(1) CBE, de fournir une traduction du fascicule du brevet européen, à laquelle il est fait référence dans la notification établie conformément à la règle 71(5) CBE. Si la(les) traduction(s) n'est(ne sont) pas fournie(s), le brevet européen peut, dès l'origine, être réputé sans effet dans cet(ces) Etat(s). Pour plus de détails, nous vous renvoyons à la brochure susmentionnée.

3. **Paiement des taxes annuelles pour le brevet européen**
Conformément à l'article 141 CBE des taxes annuelles "nationales" dues au titre du brevet européen peuvent être perçues pour les années suivant celle au cours de laquelle la mention de la délivrance du brevet européen est publiée au "Bulletin européen des brevets. Pour plus de détails, nous vous renvoyons à la brochure susmentionnée.

Amazon.com, Inc., Amazon.com Services LLC - Ex. 1017, Page 000474

Europäisches Patentamt
European Patent Office
Office européen des brevets

European Patent Office
80298 MUNICH
GERMANY

Questions about this communication ?
Contact Customer Services at www.epo.org/contact

Berggren Oy, Tampere
Visiokatu 1
33720 Tampere
FINLANDE

Date
19.10.20

Reference	Application No./Patent No.
TP109764EP	12845839.5 - 1209 / 2774375
Applicant/Proprietor	
Nokia Technologies Oy	

Transmission of the certificate for a European patent pursuant to Rule 74 EPC

The certificate for a European patent is herewith transmitted.

The European patent specification can be downloaded from the EPO publication server **https://data.epo.org/publication-server/** (see OJ EPO 2005, 126).

Note:
A corrected title page of the European patent specification will be published, if the bibliographic data have been changed after completion of the technical preparations.

For the Examining Division

Europäisches Patentamt • European Patent Office • Office européen des brevets

Amazon.com, Inc., Amazon.com Services LLC - Ex. 1017, Page 000475

Europäisches Patentamt
European Patent Office
Office européen des brevets

European Patent Office
80298 MUNICH
GERMANY

Questions about this communication ?
Contact Customer Services at www.epo.org/contact

Berggren Oy
P.O. Box 16
Eteläinen Rautatiekatu 10A
00101 Helsinki
FINLANDE

Date
11.08.21

Reference	Application No./Patent No.
TP109764EP	12845839.5 - 1209 / 2774375
Applicant/Proprietor	
Nokia Technologies Oy	

Communication regarding the expiry of the time limit within which notice of opposition may be filed

You are hereby informed that on expiry of the nine-month time limit from the publication of the mention of the grant of European patent No. 2774375 no notice of opposition had reached the files.

The entry in the Register of European Patents will be automatically generated by the electronic data processing system.

For the Examining Division

Europäisches Patentamt • European Patent Office • Office européen des brevets

EPPU 02: 07.10.20 1209

Amazon.com, Inc., Amazon.com Services LLC - Ex. 1017, Page 000476