JVC KENWOOD HOLDINGS

Unification of derivation process for merge mode and MVP

JCTVC-F419

Hiroya Nakamura, Shigeru Fukushima, Masayoshi Nishitani

JVC KENWOOD Holdings, Inc.

Copyright © 2011 JVC KENWOOD Holdings Inc. All rights reserved.

JVC KENWOOD Holdings, Inc.

Amazon.com, Inc., Amazon.com Services LLC - Ex. 1009, Page 000001
IPR2024-00605 (Amazon.com, Inc., Amazon.com Services LLC v. Nokia Technologies Oy)

1 Overview

Amazon.com, Inc., Amazon.com Services LLC - Ex. 1009, Page 000002

Overview

JVC KENWOOD HOLDINGS

- Motivation
- Proposed technique
  - Proposal 1: for merge mode
  - Proposal 2: for MVP
- Simulation Results

  Overall BD-rate
  - Proposal 1: 0.1-0.2% loss for merge mode
  - Proposal 2: approximately no gain and loss for MVP
  - Proposal 1 and 2: 0.0-0.2% loss for merge mode and MVP
- Conclusions

Amazon.com, Inc., Amazon.com Services LLC - Ex. 1009, Page 000003

2 Motivation

Motivation

- Spatial neighbors.
  - merge mode: 4 spatial neighbors
  - MVP: 5 spatial neighbors

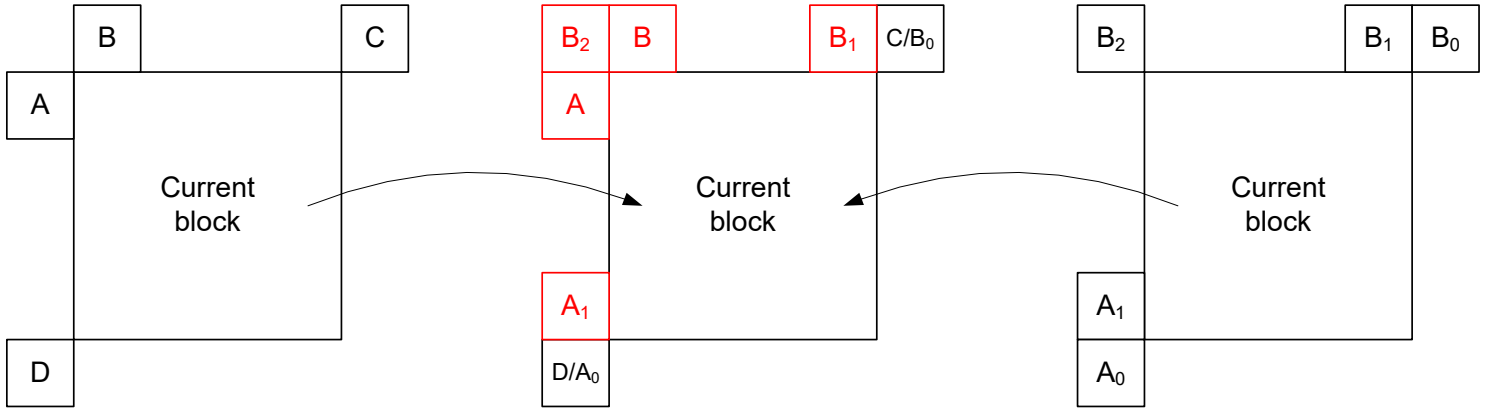

merge mode | different positions | MVP

- Derivation process
  - merge mode: all 4 candidates
  - MVP: selected 2 candidates from 5 candidates

3 Proposed Techniques

- Proposal 1: for merge mode
- Proposal 2: for MVP

Position of spatial neighbors for merge mode

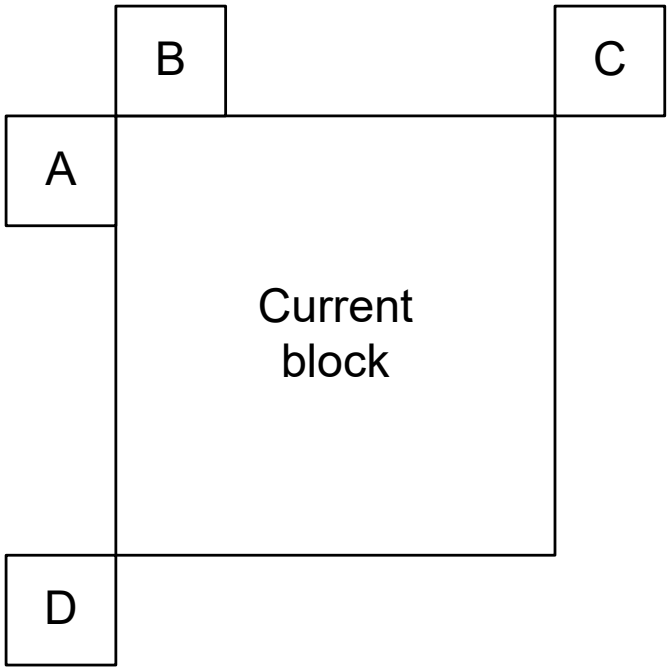

(a) HM3.0

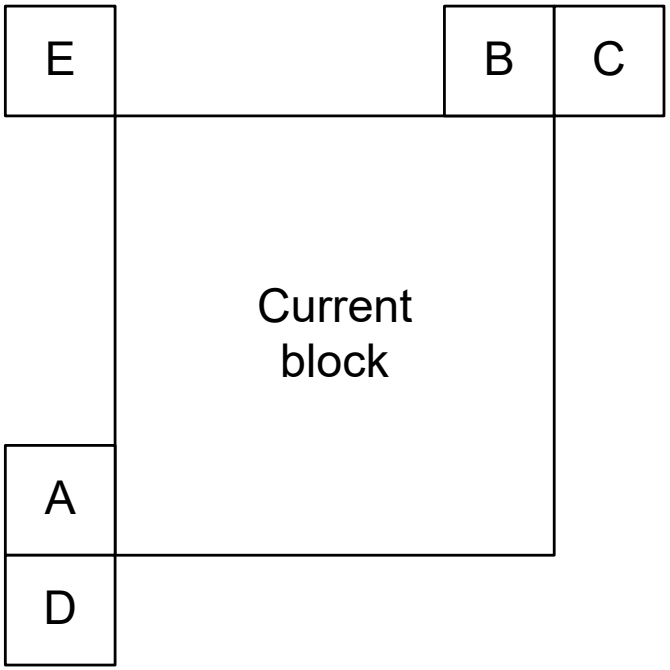

(b) Proposal

Amazon.com, Inc., Amazon.com Services LLC - Ex. 1009, Page 000007

Spatial derivation order for Proposal 1 (merge mode)

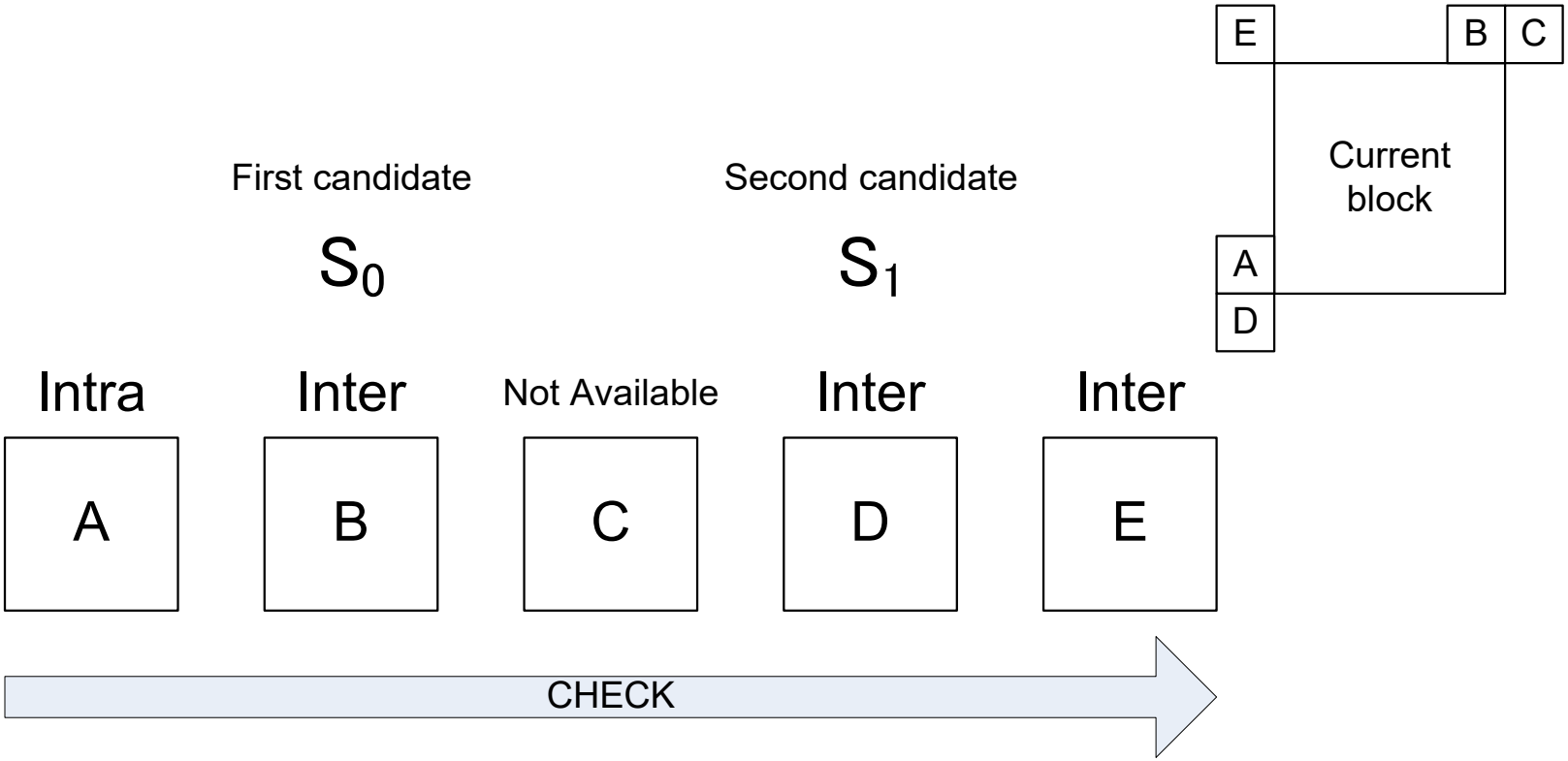

The number of comparison in the removal process

The number of candidates in the spatial and temporal derivation process	The number of times of comparison in the removal process	Notes
3 (=2+1)	**3** [times]	**Proposed technique**
4 (=3+1)	6 [times]	-
5 (=4+1)	**10** [times]	**HM3.0**
6 (=5+1)	15 [times]	-

Amazon.com, Inc., Amazon.com Services LLC - Ex. 1009, Page 000009

Comparison between HM3.0 and proposed technique for merge mode

JVC KENWOOD HOLDINGS

	HM3.0	Proposal 1
The number of spatial candidates	**4** in 4 [positions]	**Simplified** **2** in 5 [positions]
Spatial derivation order	**A, B, C, D**	**A, B, C, D, E**
The number of times of comparison of redundant candidates in the spatial derivation process	0 [time]	0 [time]
The number of temporal candidates	1	1
Merging candidate list order	A, B, Col, C, D	**Simplified** S_0, S_1, Col
The number of times of comparison in the removal process	10 [times] (A vs B, Col, C, D, B vs Col, C, D, Col vs C, D, and C vs D)	**Simplified** 3 [times] (S_0 vs S_1, S_0 vs Col, and S_1 vs Col)

Amazon.com, Inc., Amazon.com Services LLC - Ex. 1009, Page 000010

Position for motion vector predictor (MVP)

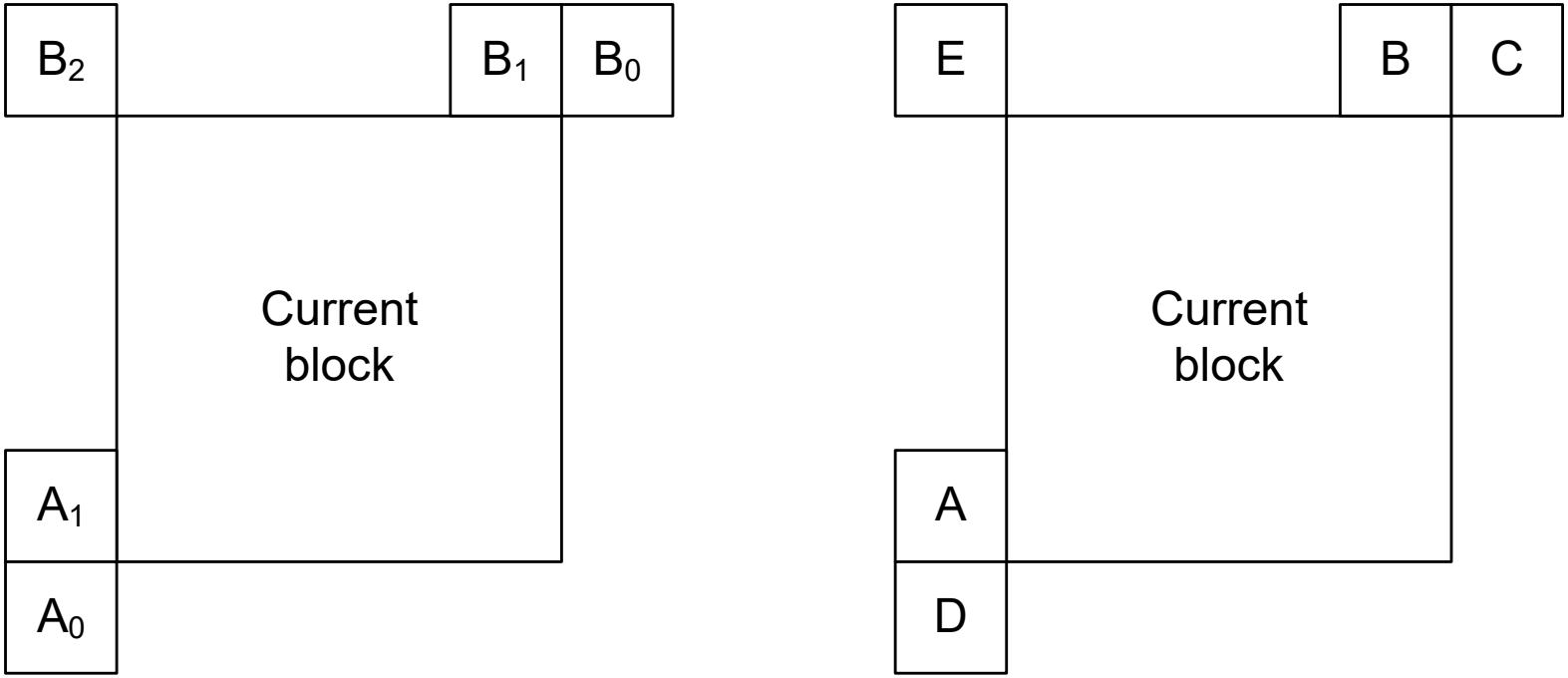

(a) HM3.0

(b) Proposed technique

Amazon.com, Inc., Amazon.com Services LLC - Ex. 1009, Page 000011

Spatial derivation order for Proposal 2 (MVP)

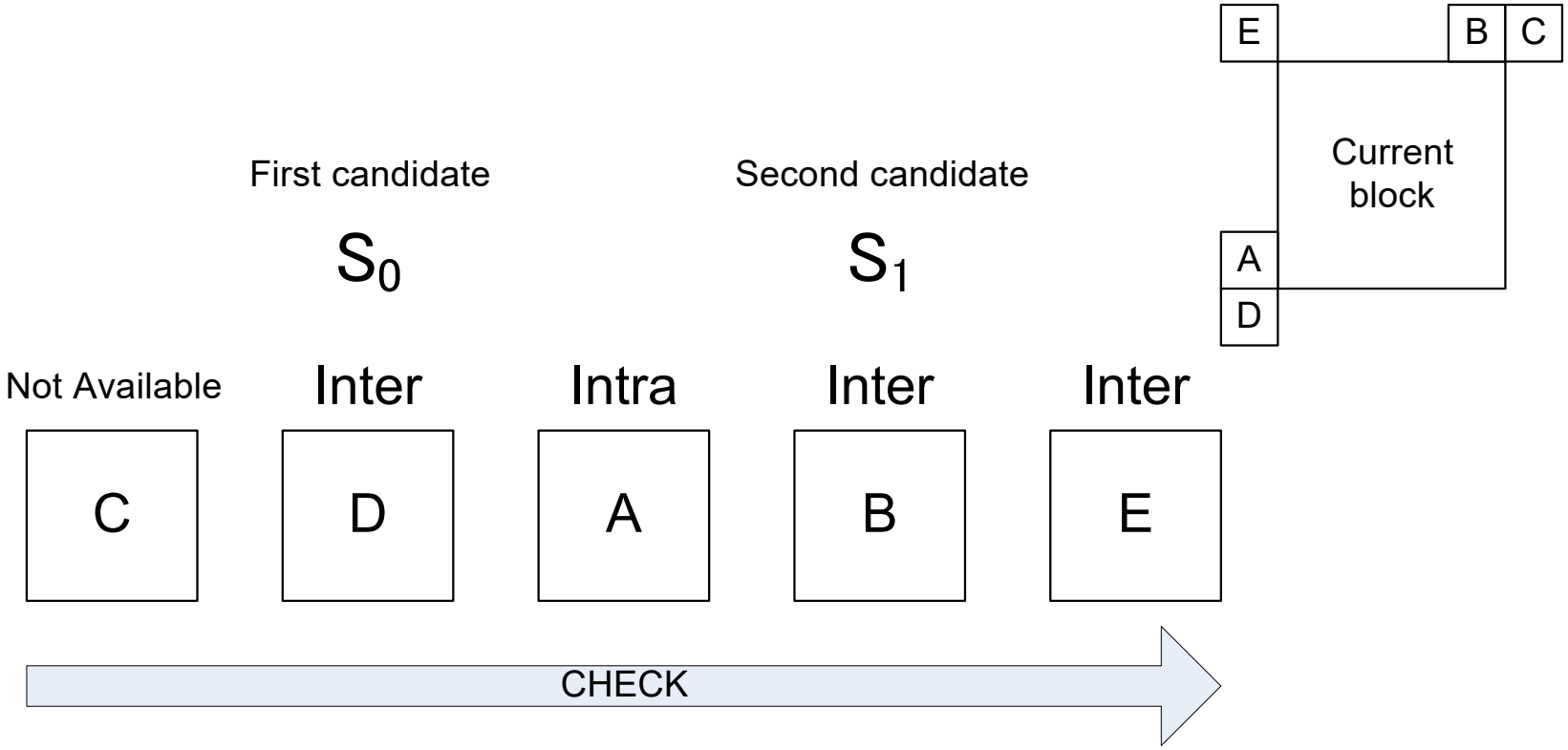

Comparison between HM3.0 and proposed technique for MVP

JVC KENWOOD HOLDINGS

	HM3.0	Proposal 2
The number of spatial candidates	2 in 5 [positions]	2 in 5 [positions]
Grouping of the neighbors in the spatial derivation process	**Group A: Left (A_0, A_1)** **Group B: Upper (B_0, B_1, B_2)**	**Simplified** **without grouping**
Spatial derivation order	**Group A: A_0, A_1** **Group B: B_0, B_1, B_2**	**Simplified** **C, D, A, B, E**
The number of times of checking per spatial neighbors in the spatial derivation process	2 [times]	**Simplified** 1 [time]
The number of times of comparison of redundant candidates in the spatial derivation process	6 [times] (mvLXA vs $mvLXB_0$, mvLXA vs $mvLXB_1$, and mvLXA vs $mvLXB_2$) x 2	**Simplified** 0 [time]
The number of temporal candidates	1	1
MVP list order	mvLXA, mvLXB, mvLXCol	$mvLXS_0$, $mvLXS_1$, mvLXCol
The number of times of comparison in the removal process	2 [times] (mvLXA vs mvLXCol, and mvLXB vs mvLXCol)	3 [times] ($mvLXS_0$ vs $mvLXS_1$, $mvLXS_0$ vs mvLXCol, and $mvLXS_1$ vs mvLXCol)

Amazon.com, Inc., Amazon.com Services LLC - Ex. 1009, Page 000013

Comparison of derivation process between merge mode and MVP

JVC KENWOOD HOLDINGS

	Proposal 1: merge mode	Proposal 2: MVP
The number of spatial candidates	2 of 5	2 of 5
Grouping in the spatial derivation process	without grouping	without grouping
Spatial derivation order	**A, B, C, D, E**	**C, D, A, B, E**
The number of times of comparison of redundant candidates in the spatial derivation process	0 [time]	0 [time]
The number of temporal candidates	1	1
Merge/MVP list order	S_0, S_1, Col	$mvLXS_0$, $mvLXS_1$, mvLXCol
The number of times of comparison in the removal process	3 [times] (S_0 vs S_1, S_0 vs Col, and S_1 vs Col)	3 [times] ($mvLXS_0$ vs $mvLXS_1$, $mvLXS_0$ vs mvLXCol, and $mvLXS_1$ vs mvLXCol)

different

Amazon.com, Inc., Amazon.com Services LLC - Ex. 1009, Page 000014

4 Experiments

Simulation results of Proposal 1 for merge mode

JVC KENWOOD HOLDINGS

- Overall BD-rate: 0.1-0.2% loss

	Random Access HE			Random Access LC		
	Y	U	V	Y	U	V
Class A	0.1	0.1	0.1	0.2	0.1	0.0
Class B	0.1	0.0	0.0	0.2	0.1	0.1
Class C	0.0	0.2	0.2	0.2	0.1	0.2
Class D	0.1	0.1	0.0	0.1	0.0	0.0
Class E						
Overall	**0.1**	**0.1**	**0.1**	**0.2**	**0.1**	**0.1**
Enc Time[%]	99%			99%		
Dec Time[%]	101%			101%		

	Low delay B HE			Low delay B LC		
	Y	U	V	Y	U	V
Class A						
Class B	0.1	0.3	0.0	0.3	0.0	0.2
Class C	0.1	-0.1	0.1	0.1	0.0	0.0
Class D	0.0	-0.3	0.4	0.2	0.0	-0.1
Class E	-0.1	0.4	-0.3	0.2	-0.2	0.6
Overall	**0.1**	**0.1**	**0.1**	**0.2**	**0.0**	**0.1**
Enc Time[%]	99%			99%		
Dec Time[%]	100%			99%		

Amazon.com, Inc., Amazon.com Services LLC - Ex. 1009, Page 000016

Simulation results of Proposal 2 for MVP

JVC KENWOOD HOLDINGS

- Overall BD-rate approximately no gain and loss

	Random Access HE			Random Access LC		
	Y	U	V	Y	U	V
Class A	0.0	0.1	0.0	0.1	0.2	0.0
Class B	0.0	0.0	-0.1	0.0	0.0	0.0
Class C	0.0	0.0	0.1	0.1	0.0	0.0
Class D	0.1	0.1	0.0	0.0	-0.1	-0.1
Class E						
Overall	**0.0**	**0.1**	**0.0**	**0.0**	**0.0**	**0.0**
Enc Time[%]	100%			100%		
Dec Time[%]	101%			101%		

	Low delay B HE			Low delay B LC		
	Y	U	V	Y	U	V
Class A						
Class B	0.0	0.1	-0.2	0.0	-0.1	0.0
Class C	0.0	0.1	0.0	0.0	-0.1	-0.2
Class D	0.0	0.0	0.5	0.0	-0.3	0.0
Class E	0.0	0.6	0.0	0.0	0.1	0.2
Overall	**0.0**	**0.1**	**0.1**	**0.0**	**-0.1**	**0.0**
Enc Time[%]	100%			99%		
Dec Time[%]	102%			101%		

Amazon.com, Inc., Amazon.com Services LLC - Ex. 1009, Page 000017

Simulation results of Proposal 1 and Proposal 2

JVC KENWOOD HOLDINGS

- Overall BD-rate 0.0-0.2% loss

	Random Access HE			Random Access LC		
	Y	U	V	Y	U	V
Class A	0.1	0.1	0.3	0.2	0.2	0.0
Class B	0.1	0.0	0.0	0.2	0.1	0.1
Class C	0.1	0.1	0.1	0.2	0.2	0.3
Class D	0.1	0.1	0.0	0.1	0.0	0.0
Class E						
Overall	**0.1**	**0.1**	**0.1**	**0.2**	**0.1**	**0.1**
Enc Time[%]	99%			99%		
Dec Time[%]	101%			101%		

	Low delay B HE			Low delay B LC		
	Y	U	V	Y	U	V
Class A						
Class B	0.1	0.2	-0.2	0.3	0.1	0.1
Class C	0.1	0.1	0.0	0.2	0.1	0.0
Class D	0.0	-0.3	0.6	0.2	-0.2	0.0
Class E	0.0	0.0	-0.1	0.1	-0.3	0.3
Overall	**0.0**	**0.0**	**0.1**	**0.2**	**0.0**	**0.1**
Enc Time[%]	98%			99%		
Dec Time[%]	102%			101%		

Amazon.com, Inc., Amazon.com Services LLC - Ex. 1009, Page 000018

5

Conclusions

Conclusions

- We would like to study in CE activity:
  - Each of the number of spatial candidates (2, 3, 4 and 5).
  - Each of the method (the number of times) of checking in the spatial derivation process
  - Comparison/no comparison of redundant candidates in the spatial derivation process
  - Evaluation of this proposed technique under robustness conditions

Amazon.com, Inc., Amazon.com Services LLC - Ex. 1009, Page 000020

JVC KENWOOD
HOLDINGS