UNITED STATES PATENT AND TRADEMARK OFFICE

BEFORE THE PATENT TRIAL AND APPEAL BOARD

AMAZON.COM, INC., AMAZON.COM SERVICES, LLC,
Petitioner

v.

NOKIA TECHNOLOGIES OY,
Patent Owner

Case: IPR2024-00605
U.S. Patent No. 10,536,714

PATENT OWNER'S PRELIMINARY RESPONSE

TABLE OF CONTENTS

I. INTRODUCTION 1
II. BACKGROUND 3
A. Motion-Compensated Prediction in Video Coding 3
1. Role of Encoder in Motion-Compensated Prediction 7
2. Role of Decoder in Motion Compensated Prediction 9
3. Transmission and Decoding of Motion Vectors 9
B. The ’714 Patent 12
C. The ’714 Patent’s Prosecution History 16
1. Priority Applications 17
2. Application No. 16/356,733 20
3. Subsequent Application 20
4. Prior Art Cited in Prosecution 21
D. THE ASSERTED PRIOR ART 25
1. Nakamura (Ex-1007) 25
2. WD4 (Ex-1010) 28
3. Rusert (Ex-1004) 28
4. Karczewicz (Ex-1005) 30
5. Lin (Ex-1006) 31
E. POSITA 31
F. Claim Construction 32
G. Claim Listing 32
III. ARGUMENT 32
A. The Petition Should Be Denied Under *Advanced Bionics* Because Cumulative References Have Been Repeatedly Argued to The Board and Patent Office and Petitioner Has Not Demonstrated Either Body Erred. 32
1. Petitioner’s art is substantially the same as the art cited in the prosecution of the ’714 Patent 35

2. Petitioner has not established that the Patent Office erred during prosecution.....44

B. Petitioner Has Not Established A Reasonable Likelihood That The Challenged Claims Are Unpatentable In Light Of Ground 1.....47

1. Petitioner's Ground 1 argument fails because it conflates the "motion vector prediction list" and the determined "subset."....47

2. Petitioner's Ground 1 argument fails because it redefines "block associated with the first spatial motion vector prediction candidate" to "block".....50

3. Petitioner fails to demonstrate that the combination of Rusert and Karczewicz "determining a subset of spatial motion vector prediction candidates based on a location of the block associated with the first spatial motion vector prediction candidate".....52

C. Petitioner Has Not Established A Reasonable Likelihood That The Challenged Claims Are Unpatentable In Light Of Ground 2.....58

D. Petitioner Has Not Established A Reasonable Likelihood That The Challenged Claims Are Unpatentable In Light Of Ground 3.....59

1. Petitioner fails to demonstrate that the Challenged Claims are obvious in view of Nakamura and WD4 because Petitioner cannot demonstrate that WD4 is prior art.....59

2. Petitioner fails to demonstrate that the Challenged Claims are obvious in view of Nakamura and WD4 because Petitioner has not demonstrated motivation to combine Nakamura and WD4.....64

3. Petitioner fails to demonstrate that the Challenged Claims are obvious in view of Nakamura and WD4 because Petitioner fails to demonstrate how either reference teaches "determining to include or exclude . . . based on the comparing." 66

IV. CONCLUSION.....72

TABLE OF AUTHORITIES

Page(s)

CASES

Advanced Bionics, LLC v. Med-El Elektromedizinishe Geräte GMBH,
IPR2019-01469, Paper 8, 10 (P.T.A.B. Feb. 13, 2020).....passim

Amazon.com Services, LLC v. Nokia Technologies Oy
IPR20204-00604, Paper 1014 (PTAB Apr. 8, 2024) ("Sze Declaration (604)").....59

Amazon.com Services, LLC v. Nokia Technologies Oy
IPR20204-00605, Paper 1014 (PTAB Apr. 8, 2024) ("Sze Declaration (605)").....60

Autel Intelligent Tech. Corp., Ltd. v. Orange Elec. Co., Ltd.,
IPR2021-01545, Paper 8, 27 (P.T.A.B. April 8, 2022).....45

Becton, Dickinson & Co. v. Tyco Healthcare Grp., LP,
616 F.3d 1249 (Fed. Cir. 2010).....43, 48, 49

Evapco Dry Cooling, Inc., v. SPG Dry Cooling USA,
IPR2021-00687, Paper 11, 24-25 (P.T.A.B. Sept. 24, 2021).....35

Gardner Denver v. Utex Industries, Inc.,
IPR2020-00333, Paper 12, 13-14 (P.T.A.B. Aug. 5, 2020).....36, 37

Glaxosmithkline Consumer Healthcare Holdings (US) v. Cipla Ltd.,
IPR2020-00370, Paper 7, 9-12 (P.T.A.B. July 31, 2020).....37

Husky Injection Molding Systems, Ltd., et al., v. Plastipak Packaging, Inc.,
IPR2020-00428, Paper 24, 11 (P.T.A.B. July 28, 2020).....38

In re Fine,
837 F.2d 1071 (Fed. Cir. 1988).....58

Kyocera Senco Indus. Tools Inc. v. Int'l Trade Comm'n,
22 F.4th 1369 (Fed. Cir. 2022).....49

Live Nation Ent., Inc. v. Complete Ent. Res. B.V.,
PGR2017-00038, Paper 11, 12, 15-18.....40

NXP USA, Inc. v. Impinj, Inc.,
IPR2020-00519, Paper 7 (P.T.A.B. Aug. 17, 2020).....37

Panduit Corp. v. Corning Optical Commc'ns LLC,
IPR2021-01562, Paper 20, 17 (P.T.A.B. April 6, 2022) 45

Roku, Inc. v. Universal Elecs., Inc.,
IPR2019-01619, Paper 11, 16-17 (P.T.A.B. April 2, 2020).....36, 40

Samsung Elecs. Co. v. Infobridge Pte. Ltd.,
929 F.3d 1363 (Fed. Cir. 2019) 59, 61, 62, 63

Sony Interactive Ent. LLC v. Terminal Reality, Inc.,
IPR2020-00711, Paper 15, 12 (P.T.A.B. Oct. 13, 2020).....46

Universal Imaging, LLC v. Lexmark Int'l, Inc.,
IPR2019-01387, Paper 7, 15 (P.T.A.B. Feb. 27, 2020).....45

STATUTES

35 U.S.C § 102(a) 59

TABLE OF EXHIBITS

Exhibit	Description
2001	Declaration of Dr. Iain Richardson
2002	CV of Dr. Iain Richardson
2003	File History of App. Ser. No. 15/681,725 ("'725 Application")
2004	File History of App. Ser. No. 16/741,156 ("'156 Application")
2005	U.S. Patent No. 11,570,467 to Bici, et al. ("the ''467 Patent")
2006	Improved Video Compression Efficiency Through Flexible Unit Representation and Corresponding Extension of Coding Tools by Woo-Jin Han, *et al.*
2007	A Multi-Pass True Motion Estimation Scheme with Motion Vector Propagation for Frame Rate Up-Conversation Applications by Shen-Chuan Tai, *et al.*
2008	A Multistage Motion Vector Processing Method for Motion-Compensated Frame Interpolation by Ai-Mei Huang, *et al.*
2009	Bross, "BoG Report on MV Coding and Throughput/Parsing Robustness," Joint Collaborative Team on Video Coding (JCT-VC) of ITU-T SG16 WP3 and ISO/IEC JTC1/SC29/WG11, 6th Meeting, Torino, Italy, Jul. 14-22, 2011, Document JCTVC-F744 ("F744")
2010	Reserved
2011	Excerpts from "The H.264 Advanced Video Compression Standard", Richardson, 2010 (Cover pages, book pages 28-38, 69, 106, 108, 223-229)

Exhibit	Description
2012	Gary J. Sullivan et al, "Overview of the High Efficiency Video Coding (HEVC) Standard," in *IEEE Transactions on Circuits and Systems for Video Technology*, vol. 22, no 12, pp. 1649-1668
2013	Respondents' Corrected Joint Expert Identification (without Exhibits)

I. INTRODUCTION

Petitioner advances three arguments in the Petition, all of which were known to, considered by, and rightfully rejected by the Patent Office in issuing the ’714 Patent and each of its priority and subsequent applications. The Board should therefore deny institution both under *Advanced Bionics* and on the merits.

Petitioner’s first Ground modifies and combines two references (Rusert (Ex-1004) and Karczewicz (Ex-1005)), one of which (Rusert (Ex-1004)) was before the Patent Office during prosecution of a subsequent application of the ’714 Patent, and both of which are duplicative of numerous references considered by the Patent Examiner. In short, this ground asserts that blocks that serve as prediction units, where a list of motion vector prediction candidates is selected, teaches the Challenged Claims’ (Ex-1001 at Claims 9-14, 23-28, 30) requirement of comparing a motion vector prediction candidate to a subset of the set of the previously coded motion vectors to remove duplicates. An identical argument was presented by the Examiner and overcome in the ’714 Patent’s subsequent application. Patent Owner (“PO”) explained that the subset determined based on the location of the current block is not the location of one of the previous blocks that is associated with a predicted motion vector candidate from the set of predicated motion vector candidates, as required by the claims, and the pending claims were allowed. The

same Examiner who allowed the ’714 Patent’s subsequent application allowed the claims of the ’714 Patent to issue. Ground 1 is thus both without merit and duplicative of art and arguments already considered by the Patent Office.

Petitioner’s second Ground modifies and combines the references in Ground 1 with another reference (Lin (Ex-1006)), which is also duplicative of references considered by the Examiner. This ground proposes to take a known concept (a coding unit comprises one prediction unit when it has uniform motion and is only divided if different parts are moving in different directions) and adding that the number of candidates can be reduced when the motion vector from one half of the divided coding unit is removed as a candidate for the other half. Though the specific reference relied upon by Petitioner was not part of the prosecution history, multiple references containing identical prediction unit partitions with different motion vectors relied upon by the Petitioner were considered and rejected by the Patent Office. Therefore, Ground 2 is also without merit and duplicative of art and arguments already considered by the Patent Office.

Petitioner’s third Ground modifies and combines two other references (Nakamura (Ex-1007) and WD4 (Ex-1010)), both of which were before the Patent Office during prosecution of the ’714 Patent. This ground proposes applying two known techniques and materially changing both techniques so that candidates are

first put on the motion vector prediction list and then subsequently removed from the list after comparison is performed, rather than performing comparisons before deciding whether to include or exclude from the list. This is the essence of hindsight reconstruction, but in the incorrect order, of the Challenged Claims. Neither reference compels such a combination, or even suggests further adoption of aspects of the proposal, and numerous references teaching both parts of Petitioner's proposed modified combination were considered during prosecution.

Because none of the grounds are new over art or arguments already considered by the Patent Office, and because none of the grounds establish a reasonable likelihood that the challenged claims are unpatentable, institution should be denied.

II. BACKGROUND

A. Motion-Compensated Prediction in Video Coding

At a high level, most video coding techniques exploit pixel redundancy in the spatial and temporal domains, and involve finding ways to communicate new information in a bitstream by referencing similar, already communicated information. The references to already coded information are used to generate approximations of each block of a video frame being encoded; such approximations are commonly referred to as predictions. Predictions are combined with additional information, sometimes referred to as prediction error or residual information, in

order to reproduce a reconstructed image upon decoding. The encoder communicates to the decoder how to make predictions for each block as well as the residual information in a compressed form, and the decoder creates the same prediction, decodes the residual information, and combines residual and prediction to reconstruct the coded block. Ex-2001 at 21.

There are two main ways of exploiting redundancy in video coding in order to create such predictions—intra coding and inter coding. In an intra-coded block in a frame of video, reference to already coded pixels in the same frame are used to create a prediction and to reduce the number of bits necessary to encode and represent the current block. In an inter-coded block, a prediction block is constructed with reference to pixels in one or more previously coded frames, which may be frames in the past or the future in display order. The choice of one or more previously coded frames (known as reference pictures) and an offset or motion vector identifying each similar region of pixels in a reference picture, are used to create a prediction block. The instructions for creating the prediction block and the prediction error or residual are encoded. *Id.* at 21-22. In many cases, inter coding can produce a better match than intra coding, *i.e.*, a residual block that contains less data and is therefore more easily compressible.

The ’714 Patent relates to a kind of inter prediction mode in the H.265 video coding standard called merge mode. In merge mode, the encoder and decoder form identical lists of motion vector prediction candidates, called merge lists, and then the encoder communicates to the decoder which candidate to use. Merge mode exploits the property that motion vectors (*i.e.*, offsets indicating a prediction source in another frame) of neighboring blocks are often similar. Merge mode can save bits by avoiding the need to send the motion vector explicitly and instead just sending an index value to identify a motion vector prediction included in the merge list, but this potentially reduces prediction accuracy if the motion vectors available on the list do not produce accurate predictions. Ex-2001 at 25. As explained below, the ’714 patent relates to a more efficient method for constructing merge lists.

In video coding, motion may be approximated as being block-wise constant, *i.e.*, blocks of pixels in a frame are assumed to undergo translational motion represented by a motion vector with a horizontal and a vertical component. An example block size for prediction is 16x16 pixels, however modern video standards such as H.264 (*aka* AVC, or Advanced Video Coding, first published in 2003 and still widely used today for distribution of video content) and its successor H.265 (*aka* HEVC, or High Efficiency Video Coding, first published in 2013 and increasingly

popular for video streaming) allow variable block size, with blocks potentially as small as 4x4 and as large as 64x64 (in the case of HEVC). *Id.* at 26.

A motion vector for a current block to be encoded can be found using a search procedure, whereby the best matching block (according to a similarity criterion) in a previously encoded reference frame is found. Motion-compensated prediction is accomplished by identifying data (image content) from the reference frame(s) that is a good match with data in the current frame. When a suitable matching region is found, its location is communicated by the encoder using the motion vector. The motion vector will allow the decoder to obtain the same block used at the encoder from previously received encoded data. The encoder uses the prediction corresponding to the motion vector to obtain a corresponding block of difference (*aka* prediction error or residual) values, which it compresses, encodes and transmits to the decoder. The decoder decodes the compressed difference value information and combines it with the prediction corresponding to the motion vector to reconstruct an approximation of the original data (image content). The encoder and decoder carry out different steps in their respective parts of the process, but the encoder and decoder must form the same prediction for the process to work. *Id.* at 26-27.

1. Role of Encoder in Motion-Compensated Prediction

A computationally taxing part of motion-compensated prediction is identifying the motion vector to use for the prediction. This is typically done by sub-dividing the current frame into blocks, and finding matching regions in previously coded frames to use to predict the blocks in the current frame. While the blocks in the current frame are generally formed based on a grid pattern of some sort, depending on the video coding standard being used, the best matching blocks in previous frames may not, and typically do not, align with the same grid. As a result, the search for a best matching block typically involves a large number of comparisons between the current block and many corresponding blocks from prior frames, with differing offsets, or motion vectors, relative to the current block, to find the best available matching block. This search for a matching block is referred to as motion estimation.

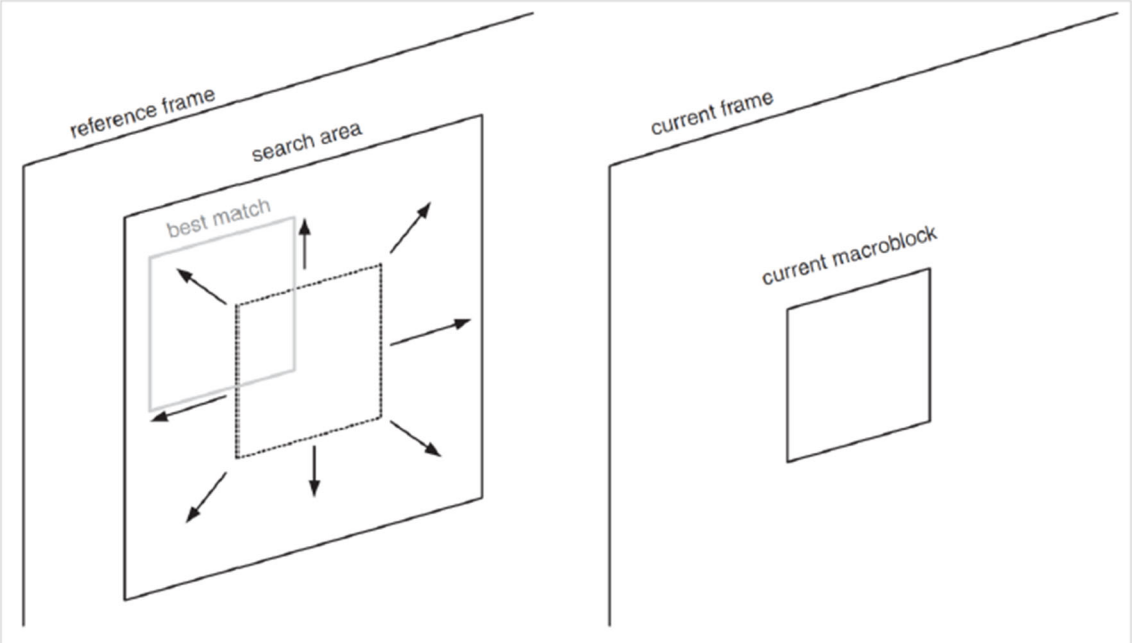

Figure 3.9 Motion estimation

The H.264 Advanced Video Compression Standard, Iain Richardson, 2010, at Section 3.3.1.4 (Ex-2011)

The encoder may select an offset or motion vector that points to an integer pixel value, so that the corresponding block is a block of pixels actually present in the prior frame. In typical video codecs in use at the time of the invention of the'714 Patent, the encoder could also choose a motion vector that pointed to a sub-pixel location – a location between full pixel values, which generally results in a need for an even greater number of calculations, in order to generate pixel values at sub-pixel (fractional pixel) locations. Ex-2001 at 27.

Once a suitable block prediction method is chosen and motion vector(s) are identified, the encoder encodes the instructions necessary to recreate the block

prediction, including the motion vector(s) and whether they are to be used as part of a uni- or bi-prediction and in some cases including an indication of a chosen reference picture. Additionally, the encoder compresses and encodes the difference between the predicted values (identified in the reference frame) and the actual values (present in the current block to be encoded), generally using a block transform such as the Discrete Cosine Transform and quantization to limit the amount of residual data sent. *Id.* at 28.

2. Role of Decoder in Motion Compensated Prediction

The decoder's task, at a high level, is to follow the encoder's instructions in the form of the motion vectors and prediction method to recreate the prediction, and then to decode the compressed prediction error and to add it to the prediction to obtain the decoded video. Importantly, the decoder must recreate the prediction signaled by the encoder exactly. Encode processes generally uses as reference frames previously coded frames that the encoder has already decoded, so that the decoder can reconstruct the same prediction for a current blocking using the prediction information communicated to the decoder. *Id.*

3. Transmission and Decoding of Motion Vectors

A strategy for reducing the amount of data encoded related to motion-compensated prediction is to reduce the data needed to send the motion vector itself.

The motion vectors must be encoded and transmitted to the decoder to allow the decoder to form the same predictions the encoder made. Motion vector information can make up a substantial portion of a compressed video frame, particularly when small block sizes are used. However, the motion vectors of adjacent blocks (in space and time) are generally correlated, and this correlation (redundancy) can be exploited through efficient encoding. Modern video coding standards such as H.264 and H.265 use predictive methods to encode the motion vectors. Ex-2001 at 22-23.

H.264 uses the median value of three already-encoded spatially adjacent motion vectors to form a prediction of the current motion vector. The difference between the current motion vector and its prediction is then losslessly encoded. The decoder forms the same prediction the encoder made, based on previously decoded data, and adds the motion vector difference to reconstruct the motion vector. *Id.*

H.265 uses more sophisticated ways to reduce the number of bits necessary to encode motion vectors. Two options for signaling each motion vector are the Merge mode and the Advanced Motion Vector Prediction (AMVP) mode, explained in some detail below. The Merge mode allows spatiotemporally adjacent blocks to share the same motion vectors and other motion information. The AMVP mode provides an efficient way to predict the motion vector for the current block to be encoded from spatiotemporally adjacent blocks. *Id.*

The following figure, taken from the 2012 paper by Gary Sullivan *et al* titled "Overview of the High Efficiency Video Coding (HEVC) Standard" conceptually displays five blocks a0, a1, b0, b1, and b2 that are spatially adjacent to the current block to be encoded. The availability of these blocks for merging is evaluated in the following order: a1, b1, b0, a0, b2. A temporal candidate for block merging at the same location in a reference frame (*i.e.*, a previously coded frame that is not the current frame) is also evaluated for block merging. A candidate block is selected and the motion information for the current block is "inherited" from the candidate block, such that the motion information of the two blocks is merged. Ex-2001 at 24. Upon completion of the merging process, the blocks in the resulting merged region (*i.e.*, the selected candidate block and the current block) share the same motion vector.

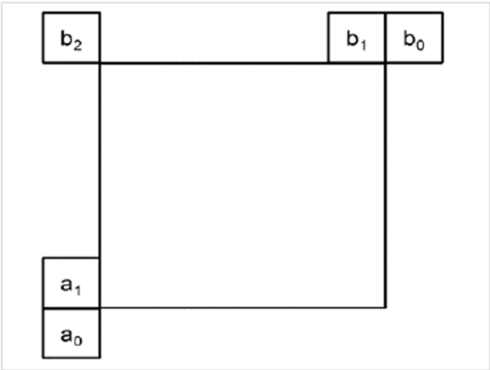

Ex-2012 at Figure 8

In the AMVP mode, a motion vector predictor is selected from a list of candidates, each of which is a motion vector of a previously coded block, and the

index of the selected candidate in the list is encoded and sent to the decoder. The list can include the same five spatial neighbors shown above, as well as a temporal candidate. Ex-2001 at 24. It is frequently the case that two or more candidates in the list have the same motion vector. It is beneficial to eliminate such duplicates to shorten the list and reduce the number of bits needed to specify the index in the list. Comparison of candidates for potential elimination is a computationally costly process which can be simplified using the invention described in the ’714 patent. *Id.* at 55.

B. The ’714 Patent

One method for conveying information about a motion prediction, such as the motion vectors and reference frames to use for a particular prediction unit, is the construction of parallel lists of inter prediction parameters such as motion vectors in both an encoder and a decoder. If both encoder and decoder construct the same motion vector prediction list, then data can be saved by encoding an index into the list rather than the motion information itself. The inventors of the ’714 Patent understood this to be a desirable technique, but there was a need to reduce the computational complexity of constructing such lists and, in particular, the process of comparing candidates in order to remove redundant (*i.e.*, identical) candidates. Ex-1001 at 4:19-23. A brief analysis of the potential number of such lists confirms the

scale of the potential problem. A 1080p (High Definition) video frame has 1920x1080 = 2,073,600 pixels, and inter prediction units (prediction blocks) in H.265 can be as small as 4x4 = 16 pixels. Each coded frame can therefore include up to 2,073,600/16 = 129,600 prediction units, each with its own list to construct. If each list comprises 5 candidates and each candidate is compared once to each other candidate (hence, 10 comparisons), this would total 324,000 comparisons per frame. At 30 frames per second, this could total more than 9,724,000 comparisons per second. While many video sequences are encoded using a mix of larger and smaller inter prediction units and other coding methods, a decoder must be able to accommodate such a worst-case sequence, and so must be computationally capable of performing this number of comparisons per second to decode real-time video.

To reduce the complexity of constructing motion prediction candidate lists for inter prediction modes such as merge mode, and to make it less complex to implement at the decoder, the inventors of the ’714 Patent sought to incorporate into the merge list method a way to reduce the number of comparisons based on, among other things, the location of the candidates relative to the prediction unit having its spatial motion vector candidate list constructed. Ex-1001 at 4:23-39.

Figure 5 of the ’714 Patent, with reference to Figures 9 and 11, illustrates improvements in merge list construction developed by the inventors. Figures 9 and

11, reproduced below, label the locations of merge list candidates relative to a current block. In Figures 11a and 11b, the larger block 900 has been divided into two smaller prediction units (PU), and in each case the candidates are shown for the second prediction unit in the block.

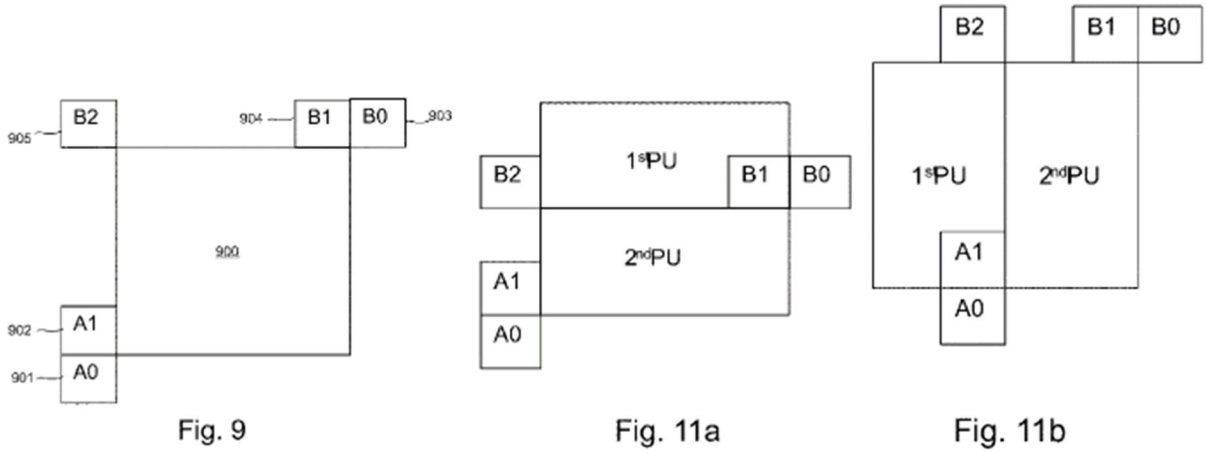

Ex-1001 at Figures 9, 11a, and 11b

Figures 5 and 8 illustrate the encoder and decoder processes for merge list construction, respectively, such that encoder and decoder construct their merge lists in the same manner. Figures 5a and 5b are reproduced below:

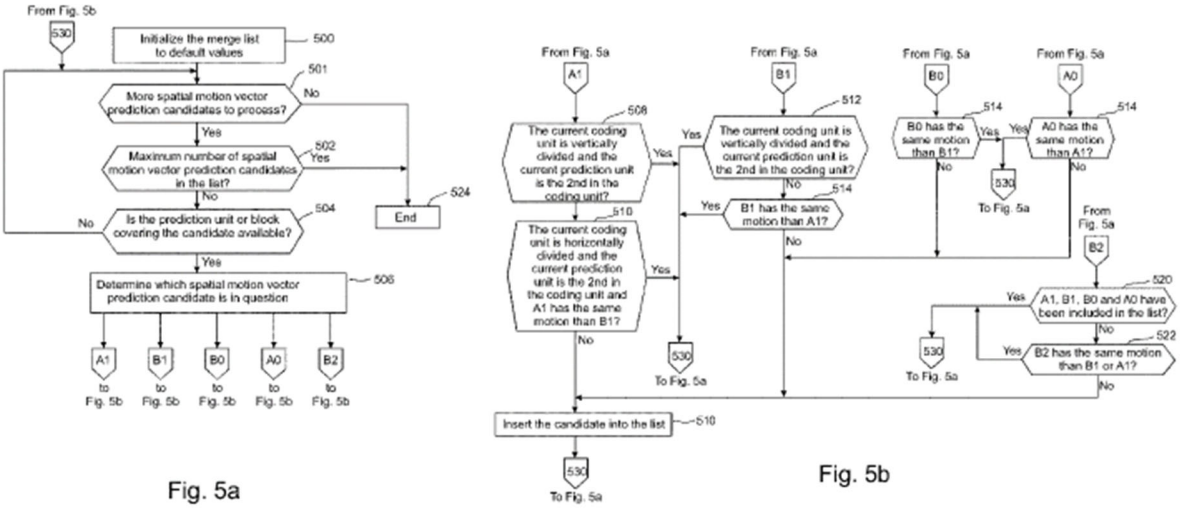

Ex-1001 at Figures 5a and 5b

Each motion vector prediction candidate A0, A1, B0, B1, and B2, which actually represent the locations of the blocks with which the motion prediction candidates are associated, is subject to a limited set of comparisons and other conditions to determine whether it can be included on the merge list. By eliminating unlikely or illogical candidates, the inventors of the ’714 Patent reduced the worst-case scenario for comparisons from 10 to 6 (Ex-1001 at 14:21-16:55), significantly reducing the number of comparisons that need to be performed to construct the merge list. As one example, the inventors recognized that a sub-divided block is unlikely to have the same motion information for both partitions of the block (otherwise it would typically not be efficient to sub-divide the block), and so the candidate corresponding to the first partition of the block could be eliminated

without the need for comparison when constructing the merge list for the second partition of the block. This is reflected, for example, in blocks 508 and 512 of Fig. 5b. Ex-1001 at 15:50-16:23.

C. The ’714 Patent’s Prosecution History

The ’714 Patent claims priority, through three utility patent applications, to a provisional patent application filed in November 2011. The first utility application (App. No. 13/666,680 (the “’680 application”), now Patent No. 9,571,833 (the “’833 patent”), Ex. 1015) was subject to multiple Office Actions and responses before being allowed. The two subsequent intervening applications were allowed on the first Office Action, or after an obviousness type double-patenting rejection. During the prosecution of each application, the same art previously considered was cited. The application that issued as the ’714 Patent followed a similar pattern, but additional art was submitted to the Patent Office. The same Examiner and Supervisory Examiner allowed each patent in the family, and the reasons for allowance for each refer back to the original ’680 Application (Ex. 1015). Accordingly, PO addresses the file history of the ’714 Patent as well as its related applications below.

1. Priority Applications

a) Application No. 13/666,680

The originally filed claims in the ’680 Application had many elements in common with the Challenged Claims. *Compare* Ex-1015 at 51-60 *with* Ex-1001 at cl. 1. Both recite: (1) selecting a first spatial motion vector prediction candidate that is selected from a set of spatial motion prediction candidates for a block of pixels; (2) determining a subset of spatial motion vector predictions based on a location of the block associated with the first spatial motion vector prediction candidate; (3) comparing motion information of the first spatial motion vector prediction candidate with motion information of spatial motion vector prediction candidates in the determined subset of spatial motion vector prediction candidates; and (4) excluding the first spatial motion prediction candidate based on the comparing.

The original claims were rejected over a combination of Han, Woo-Jin, et al.; “*Improved Video Compression Efficiency Through Flexible Unit Representation and Corresponding Extension of Coding Tools*”; Circuits and Systems for Video Technology; IEEE Transactions on Dec. 20, 2010; 1709-1720 (Ex-2006) (“Han”) and Tai, Shen-Chuan, et al.; “A Multi-Pass True Motion Estimation Scheme with Motion Vector Propagation for Frame Rate Up-Conversion Applications”; Journal of Display Technology; 4.2 (2008): 188-197 (Ex-2007) (“Tai”). The Examiner wrote

that Han teaches "receiving a block of pixels including a prediction unit," but does not teach explicitly the remainder of the limitations, which Tai teaches. Ex-1015 at 159-162. Thus, as stated by the Examiner, "[i]t would have been obvious to one with ordinary skill in the art at the time of invention, to modify the teachings of Han with the teachings of Tai to use the geometric relationship proposed in [2] describing the correlation between the current block position and the motion edge to reduce the number of PMV predictors to be evaluated." *Id.* at 162.

PO responded by amending the independent claims to recite, "<u>the merge list is selected based on the motion information</u> and if at least one of the comparisons indicates that the motion vector information of the spatial motion vector prediction candidates correspond with each other, excluding the first spatial motion vector prediction candidate from the merge list." *Id.* at 242 (emphasis in original). In the subsequent Final Rejection, the Examiner disagreed and added a reference to the Han-Tai combination—Huang, Ai-Mei et al., "*A Multistage Motion Vector Processing Method for Motion-Compensated Frame Interpolation*," Image Processing, IEEE Transactions on May 17, 2008, pp. 694-708 (Huang, Ex-2008; Ex-1015 at 272) ("Huang"). The Examiner stated that, although the Han-Tai combination does not teach explicitly "where the merge list is selected based on the motion [information]," this is taught by Huang. Ex-1015 at 275.

In response, PO amended the independent claims to recite, "comparing motion information of the first spatial motion vector prediction candidate with motion information of spatial motion vector prediction candidates in the determined subset of spatial motion vector prediction candidates [is performed] <u>without making a comparison with other spatial motion vector prediction candidates that are not included within the subset</u>[.]" *Id.* at 328.

Following this amendment, the Examiner allowed the claims of the '680 Application. *Id.* at 378-380.

b) Subsequent Intervening Priority Applications

Shortly before the '680 Application issued, PO filed a continuation application, No. 15/426,822, and filed a terminal disclaimer over the parent case (the '680 Application). Ex-1016 at 104-105. Following entry of the terminal disclaimer, the '822 Application was allowed without rejection. *Id.* at 11-113. The '822 Application was allowed by the same Examiner who allowed the '680 Application.

Before the '822 Application issued, PO filed a continuation application, No. 15/681,725. Ex-2003. The Examiner allowed the '725 Application on the first Office Action following the filing of a terminal disclaimer over the '680 and '822 Applications. Ex-2003 at 95-101. The '725 Application was allowed by the same Examiner who allowed the '680 and '822 Applications.

2. Application No. 16/356,733

Before the ’725 Application issued, PO filed another continuation application, No. 16/356,733. Ex-1002. The ’733 Application ultimately issued as the ’714 Patent. Ex-1001. During prosecution, PO filed a terminal disclaimer, prior to the issuance of a first Office Action, and the Examiner allowed the ’733 Application following submission of the terminal disclaimer. Ex-1002 at 106-107, 113-115. The ’714 Patent issued on January 14, 2020. Ex-1001. The same Examiner who allowed the three prior applications also allowed the ’733 Application.

3. Subsequent Application

Before the ’733 Application issued, PO filed a continuation application, No. 16/741,156, and filed a terminal disclaimer over the parent case (the ’680 Application). Ex-2004 at 106-108. Following entry of a terminal disclaimer, the ’156 Application was allowed without rejection. *Id.* at 114-123.

PO, however, filed a request for continued examination under *Ex Parte Quayle* and many of the claims were rejected as being anticipated by Rusert, *et al.* (U.S. Pub. No. 2011/0194609). *Id.* at 167-181; *see* Ex-1004. PO responded by amending independent claim 1 and arguing that Rusert fails to teach or suggest that the subset of the set of spatial motion vector prediction candidates is determined based on a location of the block associated with the first spatial motion vector

prediction candidate. Ex-2004 at 218. Following this amendment and argument, the same Examiner who allowed the priority applications allowed the ’156 Application, which issued as U.S. Patent No. 11,570,467. *Id.* at 228-235.

4. Prior Art Cited in Prosecution

The chart below summarizes the art of record during the prosecution of the ’714 Patent as well as its priority and child applications that are relevant to the Petition. Additional art was also raised and considered, but the art below is either the same art raised by the Petition or is not meaningfully different from the art raised in the Petition.

Reference	Inventors / Authors	’680 FH	’822 FH	’725 FH	’733 FH	’156 FH
JCTVC-F419 “Nakamura” EX-1007	Hiroya Nakamura, *et al.*	¥[1]	¥	¥	¥	¥
WD4 EX-1010	Benjamin Bross, *et al.*	¥	¥	¥	¥	¥
Improved Video Compression Efficiency Through Flexible Unit Representation and Corresponding Extension of Coding Tools “Han” EX-2006	Woo-Jin Han, *et al.*	†‡	¥	¥	¥	¥

[1] Key: † Cited by examiner ‡ Discussed in office actions ¥ Cited by applicant

Reference	Inventors / Authors	’680 FH	’822 FH	’725 FH	’733 FH	’156 FH
A Multi-Pass True Motion Estimation Scheme with Motion Vector Propagation for Frame Rate Up-Conversion Applications “Tai” EX-2007	Shen-Chuan Tai, *et al.*	†‡	¥	¥	¥	¥
A Multistage Motion Vector Processing Method for Motion-Compensated Frame Interpolation “Huang” EX-2008	Ai-Mei Huang, *et al.*	†‡	¥	¥	¥	¥
US 2011/0194609 (Rusert from Petition) EX-1004	Thomas Rusert, *et al.*					‡¥

a) Nakamura (Ex-1007)

PO cited Nakamura during prosecution of the original application in the family (the ’680 application; Ex-115 at 308) and in each subsequent family member, including the ’733 Application which issued as the ’714 patent. PO addresses the substance of Nakamura in connection with the art raised in the Petition.

b) WD4 (Ex-1010)

PO cited WD4 during the prosecution of the original application in the family and in each subsequent family member, including ’733 Application. Ex-1015 at 308. WD4 is a working draft of the H.265 standard.

c) Han (Ex-2006)

As addressed in § II(c)(1)(a) above, Han was a central focus of the Examiner during the prosecution of the original application and was the central reference in numerous obviousness rejections. PO cited Han in each subsequent family member, including the ’733 Application. *See, e.g.*, Ex-1016 at 133. Han teaches a video compression scheme based on a highly flexible hierarchy of unit representation which includes coding units, prediction units, and transform units. Ex-1015 at 159.

d) Tai (Ex-2007)

The Examiner cited Tai during the prosecution of the original application and made an obviousness rejection in combination with Han. Ex-1015 at 158-159. PO cited Tai in each subsequent family member, including the ’733 Application. *See, e.g.*, Ex-1016 at 134. Tai teaches utilizing the motion information relating to neighboring blocks generated in the previous pass to gradually refine the accuracy of the motion vector in the current block. Ex-2007. As part of its disclosure, Tai teaches determining a subset of spatial motion vector predictions based on the location of the block associated with the first spatial motion vector prediction

candidate, comparing motion information of a first spatial vector predication candidate in the determined subset of spatial motion vector prediction candidates, and excluding the first spatial motion vector prediction candidate from the merge list if at least one of the comparisons indicates that the motion vector information of the spatial motion vector prediction candidate corresponds with each other. Ex-1015 at 160-162.

e) Huang (Ex-2008)

The Examiner cited Huang during the prosecution of the original application and made an obviousness rejection in combination with Han and Tai. Ex-1015 at 272. PO also cited Huang in each subsequent family member, including the ’733 Application. *See, e.g.*, Ex-1016 at 133. Huang teaches using motion block merging to correct unreliable motion vectors by finding a best single motion vector, to preserve edge information and to maintain the integrity of a moving object structure. Ex-1015 at 275-276.

f) Rusert (Ex-1004)

PO cited Rusert during the prosecution of the subsequent ’156 Application. Ex-2004 at 151. Rusert is also cited on the face of the ’467 Patent, which issued from the ’156 Application. Ex-2005 at 2. PO will address the substance of Rusert in connection with the art raised in the Petition.

D. The Asserted Prior Art

1. Nakamura (Ex-1007)

Nakamura (JCTVC-F419) is a submission to the JCTVC, the ITU-T and ISO/IEC working group responsible for developing the HEVC standard, and consists of a written description of a proposal, a presentation summarizing the proposal, draft language for implementing the proposal in the HM (the Test Model document describing the then-current draft HEVC standard), and spreadsheets summarizing performance tests performed to compare the proposal to the current HM.

The description document (Ex-1008) provides a description of the then-current method for deriving motion vector predictor candidates in the working draft (WD3) of the draft standard. Flow charts summarizing the process for merge mode and motion vector predictor in WD3 are shown below:

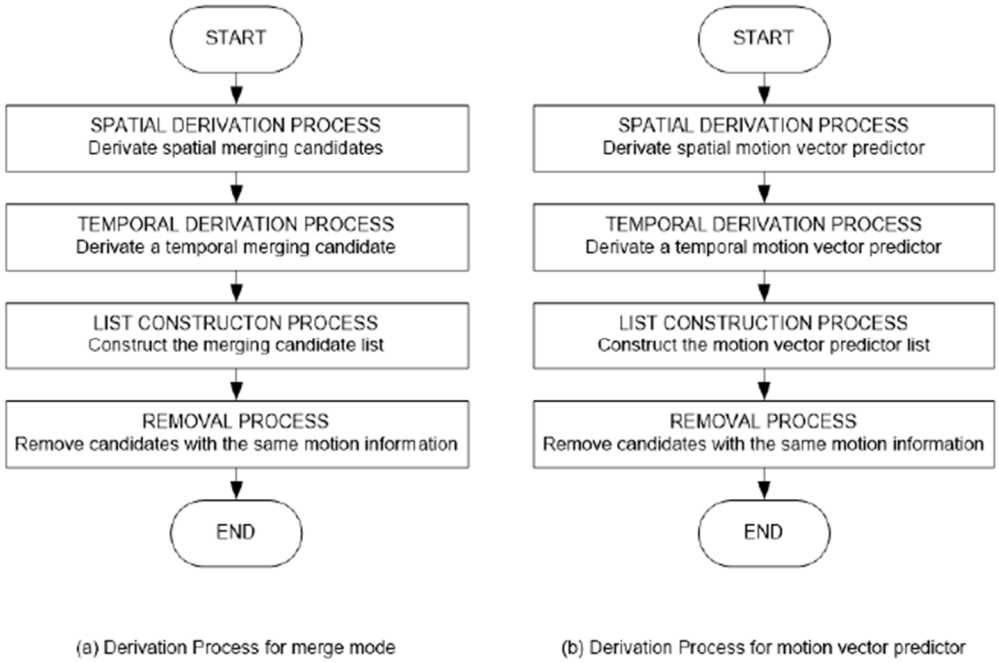

Figure 1 Derivation Process of merge mode and MVP in WD3

Nakamura, JCTVC-F419.doc (Ex-1007) at 2.

Both processes derive all spatial and temporal candidates, construct a list from those candidates, and then remove candidates with the same information.

Nakamura proposed to reduce the complexity of the system by adding fewer candidates to the list, on a first come, first serve basis, according to a pre-defined spatial derivation order:

Table 2 Comparison between HM3.0 and proposed technique for merge mode

	HM3.0	Proposal 1
The number of spatial candidates	4 in 4 [positions]	2 in 5 [positions]
Spatial derivation order	A, B, C, D	A, B, C, D, E
The number of times of comparison of redundant candidates in the spatial derivation process	0 [time]	0 [time]
The number of temporal candidates	1	1
Merging candidate list order	A, B, Col, C, D	S_0, S_1, Col
The number of times of comparison in the removal process	10 [times] (A vs B, Col, C, D, B vs Col, C, D, Col vs C, D, and C vs D)	3 [times] (S_0 vs S_1, S_0 vs Col, and S_1 vs Col)

Notes:

S_0: The first spatial candidate found in the spatial derivation process

S_1: The second spatial candidate found in the spatial derivation process

Nakamura, JCTVC-F419.doc (Ex-1007) at 4.

After a candidate had been added to the list, it would then be compared to each of the other candidates already on the list and removed if it had the same motion information. Nakamura also proposed that the derivation process (determining which candidates should go on the list) should be performed without grouping.

Table 4 presents the comparison of derivation process between merge mode and MVP in the proposal.

Table 4 Comparison of derivation process between merge mode and MVP

	Proposal 1: merge mode	Proposal2: MVP
The number of spatial candidates	2 of 5	2 of 5
Grouping in the spatial derivation process	without grouping	without grouping
Spatial derivation order	A, B, C, D, E	C, D, A, B, E
The number of times of comparison of redundant candidates in the spatial derivation process	0 [time]	0 [time]
The number of temporal candidates	1	1
Merge/MVP list order	S_0, S_1, Col	$mvLXS_0$, $mvLXS_1$, mvLXCol
The number of times of comparison in the removal process	3 [times] (S_0 vs S_1, S_0 vs Col, and S_1 vs Col)	3 [times] ($mvLXS_0$ vs $mvLXS_1$, $mvLXS_0$ vs mvLXCol, and $mvLXS_1$ vs mvLXCol)

Nakamura, JCTVC-F419.doc (Ex-1007) at 6.

2. WD4 (Ex-1010)

WD4 is a working draft of the H.265 standard posted on the JCT-VC's website sometime after the meeting where Nakamura was presented.

3. Rusert (Ex-1004)

Rusert (U.S. Patent App. Pub. No. 2011/0194609, Ex-1004) is a published patent application titled "Selecting Predicted Motion Vector Candidates" and naming Thomas Rusert, Jacob Ström, Kenneth Andersson, Per Wennersten, and Rickard Sjöberg as inventors.

Rusert discloses a method for generating a potential motion vector ("PMV") candidate list, PMV_CANDS, for a current block of pixels that is being encoded or decoded. *See* Ex-1004 at ¶¶ 11-12, 36-37. PMV candidates are obtained from

neighboring blocks around the current block and inserted into the PMV_CANDS list in an iterative process until PMV_CANDS has been filled. *See id.* at ¶¶ 40-44, 73; Ex-2001 at 29. As each new PMV candidate is considered for addition to PMV_CANDS, it is compared to the current members of PMV_CANDS to ensure that no redundant PMVs are added to the list. *See id.* at ¶¶ 70-73.

Rusert (Ex-1004), Fig. 3f (showing the distance of neighbors), Fig. 3n (showing the scan order)

The neighboring blocks surrounding the current blocks are scanned in an order based on the distance—specifically, the Euclidean and Chebyshev distances—of each neighbor from the current block; however, because multiple neighbor blocks may have the same distance, some tie-breaking mechanism is needed. *See id.* at ¶¶ 51-58. The figures of Rusert are drawn with the assumption that blocks with equivalent distances are scanned in a counter-clockwise ordering. *See id.* Once

PMV_CANDS is complete, one of the PMV candidates included in it is used as the motion vector for the current block. *See id.* at ¶¶ 36-37.

4. Karczewicz (Ex-1005)

Karczewicz (U.S. Patent App. Pub. No. 2011/0249721) is a published patent application titled "Variable length coding of coded block pattern (cbp) in video compression" and naming Marta Karczewicz, Wei-Jung Chien, and Xianglin Wang as inventors.

Karczewicz describes a variable length code (VLC) for describing a quad-tree pattern by which a coding unit (CU) can be divided into sub-CUs. *See* Ex-1005 at ¶¶ 33-32. These CUs, in turn, may be divided into prediction units (PUs), which each include data for retrieving a reference frame and/or a motion vector. Fig. *See id.* at ¶ 35. Figure 12A of Karczewicz depicts such a quad-tree structure. *See id.* at ¶¶ 123-125. Karczewicz does not disclose the use of a motion vector prediction list.

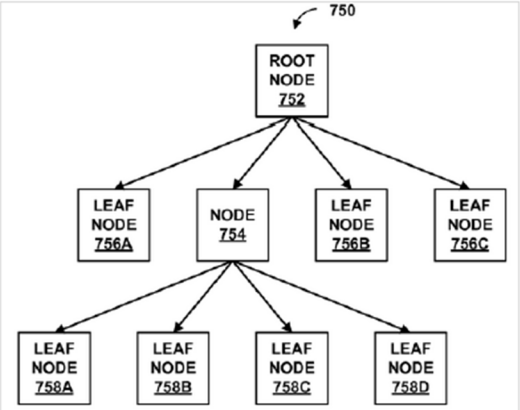

FIG. 12A

Karczewicz (Ex-1005), Fig. 12A.

5. Lin (Ex-1006)

Lin (U.S. Patent No. 10,063,876) is a published patent titled "Method and apparatus for removing redundancy in motion vector predictors" and naming Jian-Liang Lin, Yi-Wen Chen, Yu-Wen Huang, and Shaw-Min Lei as inventors.

Lin addresses a scenario where a coding unit (CU) is divided into multiple prediction units (PUs). *See* Ex-1006 at ¶¶ 6:60-7:26. Lin discloses that, where a CU is divided into 2NxN or Nx2N PUs, a motion vector prediction candidate for the second PU located within the first PU is redundant and can be discarded to avoid effectively merging the two PUs as though they were in an NxN configuration. *See id.*

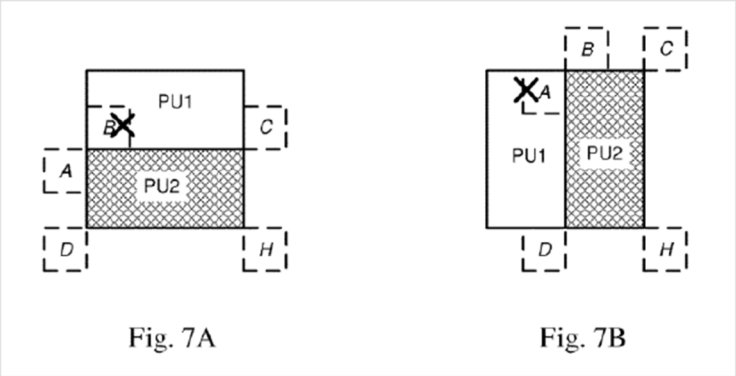

Lin (Ex-1006), Figs. 7A and 7B.

E. POSITA

PO has applied Petitioner's POSITA for the sake of this Response. Pet. at 21.

This Response does not depend on this skill level. PO reserves the right to argue in favor of different level of skill should trial be instituted.

F. Claim Construction

Petitioner takes a position on the meaning of three terms. This Response addresses the claim construction issues in the arguments below. PO reserves the right to further address these positions should trial be instituted.

G. Claim Listing

For the sake of this analysis, PO will use Petitioner's limitation labels provided in the petition's claim appendix. Pet. at 90-100.

III. ARGUMENT

A. The Petition Should Be Denied Under *Advanced Bionics* Because Cumulative References Have Been Repeatedly Argued to The Board and Patent Office and Petitioner Has Not Demonstrated Either Body Erred.

The '714 Patent and its family members have been prosecuted against numerous references teaching, in whole or in part, block concepts; motion information, including, motion vector prediction candidates, a motion vector prediction list, and a subset of motion vector prediction candidates; motion information comparison; and motion vector predication candidate removal. The Grounds raised by the Petitioner are cumulative of art and arguments considered multiple times, in the context of multiple similar and overlapping references, over

almost a decade of prosecution activity between the filing of the original application and the issuance of the Challenged Claims. Amazingly, over this period, the '714 Patent and each of its priority and subsequent patents were reviewed and allowed by the same Examiner. There is a strong presumption, then, that the Patent Office considered and approved the Challenged Claims over the art and arguments raised in the Petition, and in the absence of some showing of error in that process institution should be denied.

Under § 325(d), the Board uses a two-part analysis, considering: (1) whether the same or substantially the same art or arguments were presented to the PTO during the original prosecution; and (2) whether the Petitioner has demonstrated that the PTO erred in a manner material to the patentability of Challenged Claims. *Advanced Bionics, LLC v. Med-El Elektromedizinishe Geräte GMBH*, IPR2019-01469, Paper 8, 10 (P.T.A.B. Feb. 13, 2020) ("*Advanced Bionics*") (precedential).

Once the Board determines that the same or substantially the same art or arguments were previously presented to the PTO, it then considers whether the Petitioner has demonstrated error. *Advanced Bionics* at 8-10. "If a condition in the first part of the framework is satisfied and the petitioner fails to make a showing of material error, the Director generally will exercise discretion not to institute *inter partes* review. If reasonable minds can disagree regarding the purported treatment

of the art and arguments, it cannot be said that the Office erred in a manner material to patentability. At bottom, this framework reflects a commitment to defer to previous Office evaluations of the evidence of record unless material error is shown." *Id.*

Here, Petitioner has asserted three grounds. Pet. 15. Petitioner's primary reference for both Grounds 1 and 2, Rusert (Ex. 1004), is the same art that was considered during the prosecution of a continuation application, the '156 Application, of the '714 Patent. Pet. 15; Ex. 2004 at 169. Not only does the '156 Application have similar claims as the '714 Patent, but Petitioner also fails to acknowledge that Rusert was previously considered by the same Examiner who allowed the '714 Patent, its predecessor, and subsequent related patents to issue. *Compare* Ex-1001 at 31:21-50 *with* Ex-2005 at 31:37-58.

For its third Ground, the Petition briefly acknowledges that it uses a reference already considered in the prosecution of the Challenged Claims. Pet. at 14. The Petition indicates that the Examiner allowed the '833 Patent without any substantive discussion of Nakamura, but then ignores that the reference was found in multiple disclosures cited throughout the prosecution of the '833 Patent and its family members. *Id.*; *see, e.g.*, Ex-1016 at 133.

1. Petitioner's art is substantially the same as the art cited in the prosecution of the '714 Patent.

The Grounds presented in the Petition present three arguments: that motion vectors and motion prediction operating on prediction unit blocks satisfy the claim (Ground 1), that it would have been obvious to divide a coding unit into multiple prediction units to discard a redundant motion vector predication candidate (Ground 2), and that both merge mode and motion vector predictor processes derive all spatial and temporal candidates, construct a list from those candidates, and then remove candidates with the same motion information to achieve the patented invention (Ground 3). *See generally* Pet. §VI. However, the prosecution history of the '714 Patent and its family members shows that Examiner was aware of and considered these concepts when he allowed the Challenged Claims. *See, e.g.*, Ex-1015 at 308. The art considered during the prosecution of the Challenged Claims includes several references teaching the same method of selecting motion vector prediction candidates relied-upon in the Petition. *See* Ex-2006–Ex-2008.

The Board should find these references are the same or substantially the same as the references the Patent Office has previously reviewed and deny institution. *See e.g.*, *Evapco Dry Cooling, Inc., v. SPG Dry Cooling USA*, IPR2021-00687, Paper 11, 24-25 (P.T.A.B. Sept. 24, 2021) (finding a newly asserted reference not cited during prosecution as being substantially the same as the references that were before

the Examiner during prosecution); *see Gardner Denver v. Utex Industries, Inc.*, IPR2020-00333, Paper 12, 13-14 (P.T.A.B. Aug. 5, 2020) (denying institution upon finding that newly asserted references are no more relevant than references that were presented during prosecution); *Roku, Inc. v. Universal Elecs., Inc.*, IPR2019-01619, Paper 11, 16-17 (P.T.A.B. April 2, 2020) (denying institution upon finding that newly applied Zetts was cumulative to previously presented Kim, even though Kim was not considered for the same limitation in reexamination).

a) Petitioner has failed to show that the Rusert reference in the Petition differs in any material way from the Han, Tai, and Huang references cited in prosecution and on the face of the '714 Patent.

Petitioner relies on Rusert (Ex-1004), as its primary reference for Grounds 1 and 2, for its disclosure of generating a potential motion vector ("PMV") candidate list for a current block of pixels that is being encoded or decoded. Pet. at 16-17, 27; Ex-2001 at 29. According to Petitioner, Rusert teaches selecting PMV candidates for a current block from a set of previously coded motion vectors that were used in previous blocks, and after each iteration the set of previously-coded motion vectors increases. Pet. at 27; Ex-2001 at 30.

Even though Rusert was not cited during prosecution of the application that resulted in the '714 Patent, PO disputes that this arrangement satisfies the claims, because Rusert is largely cumulative of Han, Tai, and Huang. *See* Ex-2006–Ex-

2008. Both Rusert and Han disclose a hierarchy of block unit representation, while both Rusert and Tai disclose a correlation between the current block position and neighboring blocks to reduce the number of PMV predictors to be evaluated, and both Rusert and Huang disclose constructing a candidate list based on motion information. *Id.*; Ex-2001 at 31.

The Board has found that substantially the same prior art was previously presented to the Office when the asserted references are cumulative of references provided to the Examiner in an IDS. *NXP USA, Inc. v. Impinj, Inc.*, IPR2020-00519, Paper 7, at 8 (P.T.A.B. Aug. 17, 2020); *Gardner Denver* at 8-14 (P.T.A.B. Aug. 5, 2020). As discussed above, Rusert is cumulative of the art before the Patent Office during prosecution of the ’733 Application, which provides further support for a discretionary denial. *See, e.g., Glaxosmithkline Consumer Healthcare Holdings (US) v. Cipla Ltd.*, IPR2020-00370, Paper 7, 9-12 (P.T.A.B. July 31, 2020) (petition relying on reference “not before the Examiner during prosecution” for two grounds still raised “substantially the same prior art,” as it did not “differ ‘in any material way from the art and arguments already considered and overcome during prosecution.’” (quoting preliminary response)).

Further, Petitioner omits the fact that Rusert (Ex-1004) was considered during prosecution of a continuation application filed by PO, which issued as U.S. Patent

No. 11,570,467. Ex-2001 at 30; Ex-2005. Rusert was cited in an IDS and later raised by the Examiner during the prosecution of the application that resulted in the '467 Patent, a continuation patent. Ex-2004 at 151, 167-181, 186-187. The Examiner signed the IDS as considered and thus is presumed to have considered it. *Husky Injection Molding Systems, Ltd., et al., v. Plastipak Packaging, Inc.*, IPR2020-00428, Paper 24, 11 (P.T.A.B. July 28, 2020).

Importantly, the '467 Patent includes claims with similar scope to those at issue here. A comparison of Challenged Claim 9 of the '714 Patent is presented below next to Claim 10 from the '467 Patent to show the similarities in claim scope (Ex-2001 at 31-32):

'714 Patent	'467 Patent
A method comprising: selecting **a first spatial motion vector prediction candidate from a set of spatial motion vector prediction candidates for an encoded block of pixels** as a potential spatial motion vector prediction candidate to be included in a motion vector prediction list for a prediction unit of the encoded block of pixels, where the motion vector prediction list comprises motion information of the spatial motion vector prediction candidates; **determining a subset** of spatial motion vector prediction candidates **based on**	**A method comprising**: determining **a first spatial motion vector prediction candidate from a set of spatial motion vector prediction candidates for an encoded block of pixels**; **comparing motion information of the first spatial motion vector prediction candidate with motion information of another spatial motion vector prediction candidate of** a subset of **the set of spatial motion vector prediction candidates**, wherein the subset is less than the set, and wherein the **subset is determined based on a location of the**

’714 Patent	’467 Patent
the location of the block associated with the first spatial motion vector prediction candidate; **comparing motion information of the first spatial motion vector prediction candidate with motion information of another spatial motion vector prediction candidate in of the set of spatial motion vector prediction candidates** without making a comparison of each possible candidate pair from the set of spatial motion vector prediction candidates; **determining to include** or exclude **the first spatial motion vector prediction candidate in the motion vector prediction list based on the comparing**; and **selecting a spatial motion vector prediction candidate from the motion vector prediction list for use in decoding the encoded block of pixels**, wherein the spatial motion vector prediction candidate is selected from the motion vector prediction list using information that was received identifying a respective spatial motion vector prediction candidate from the motion vector prediction list constructed by the encoder.	**block associated with the first spatial motion vector prediction candidate**; **determining to include the first spatial motion vector prediction candidate in a motion vector prediction list** for the encoded block of pixels **based on the comparing**; and **selecting a spatial motion vector prediction candidate from the motion vector prediction list for use in decoding the encoded block of pixels**.

Ex-1002, Claim 9; Ex-2005, Claim 10.

In such circumstances, the fact that Rusert was considered by the Patent Office during ongoing prosecution weighs in favor of discretionary denial. *See, e.g., Live Nation Ent., Inc. v. Complete Ent. Res. B.V.*, PGR2017-00038, Paper 11, 12, 15-18 (P.T.A.B. Jan. 16, 20218) (denying institution under 325(d) based on art and arguments made during the challenged patent's continuation application which had claims "of very similar scope" to the challenged claims); *Ivantis, Inc. v. Sight Scis., Inc.*, IPR2022-01529, Paper 16, 16-17 (P.T.A.B. Mar. 21, 2023) (denying institution under § 325(d) and finding that "the prosecution histories of [ ] patents [that issued from continuation applications from the patent at issue] … [were] instructive concerning art presented to the Office and considered for purposes of a § 325(d) analysis.").

b) Petitioner has failed to show that the Karczewicz and Lin references in the Petition differs in any material way from the Han reference cited in prosecution and on the face of the '714 Patent.

Petitioner relies on Karczewicz, as an additional reference in Grounds 1 and 2, for its disclosure of H.265 prediction units, and argues that a POSITA would have been motivated to apply Rusert's teachings to prediction units and related concepts. Pet. 15, 23. However, the same quad-tree pattern by which a coding unit can be divided into prediction units relied upon in Karczewicz was before the Patent Office

during the prosecution of the ’714 Patent and its priority applications, for example, in Han. Ex-2001 at 33; Ex-2006.

Han teaches a video compression scheme based on a flexible hierarchy of unit representation which includes three block concepts: coding unit, prediction unit, and transform unit. Ex-1015 at 159. In particular, the partition information in quad-tree based adaptive loop filter is replaced with coding unit splitting information. *Id.*; Ex-2001 at 33. Petitioner fails to identify this similarity anywhere in its Petition for good reason—as with the Petition’s other arguments, the art cited by Petitioner is cumulative to that considered by and rejected by the Patent Office when allowing the claims of the ’714 Patent and its priority applications. Ex-2001 at 33.

Petitioner relies on Lin (Ex-1006), in Ground 2, for its disclosure of removal of redundant motion vector predictors for divided coding units, and argues that a POSITA would have been motivated to apply Lin’s teachings to the Rusert/Karczewicz combination because Lin provides a straightforward teaching for reducing redundant candidates when blocks are divided. Pet. 15, 50. However, the same removal teaching relied upon in Lin was before the Patent Office, in Han, during the prosecution of the ’714 Patent and its priority applications. *See, e.g.*, Ex-1015 at 163-164. Like Lin, Han teaches that the transform may be applied to multiple prediction unit partitions with different motion vectors to aid in the exclusion of

potential spatial motion vector prediction candidates from the merge list if the prediction unit is in the second partition. *Id.*; Ex-2001 at 34.

Accordingly, the relied upon disclosures from Karczewicz and Lin were included in at least the Han reference cited by the Patent Office during prosecution of ’714 Patent’s priority applications. Karczewicz and Lin are no more than a cumulative reference of Han. Ex-2001 at 33-34.

c) Petitioner has failed to show that the Nakamura and WD4 references in the Petition differs in any material way from the Han, Tai, and Huang references cited in prosecution and on the face of the ’714 Patent.

Petitioner relies on Nakamura for its disclosure of reducing the number of candidates in the spatial derivation process to reduce the number of comparisons in the removal process. Pet. at 63. Petitioner seeks to modify Nakamura by applying it to WD4. *Id.* at 60-62. The Petitioner argues this modification, of applying Nakamura’s teachings to the draft H.265 standard, is motivated by the fact “that [it] was its express purpose.” *Id.* at 61; Ex-2001 at 34-35.

Nakamura and WD4, however, were before the Patent Office and considered during the prosecution of the ’714 Patent. Ex-1002 at 127-128. Petitioner argues that the Examiner did not consider the IDS that PO submitted to the USPTO citing Nakamura during the prosecution of the ’833 Patent before the Notice of Allowance. Pet. at 14. Petitioner also argues that the ’833 Patent was allowed without any

substantive discussion of Nakamura (*Id.*), however it is not a requirement that a prior art reference be discussed for *Advanced Bionics* to apply, particularly when the teachings of the reference are cumulative to other art considered and rejected during prosecution, such as Han, Tai, and Huang.

Rather, whether and the extent to which a reference was discussed during prosecution is one of the *Becton, Dickinson* factors considered in applying discretion under 325(d) under *Advanced Bionics*. *Advanced Bionics* at 9, n. 10. Arguments concerning how the Patent Office treated a reference falls under *Becton, Dickinson* factor (c), "the extent to which the asserted art was evaluated during examination, including whether the prior art was the basis for rejection." *Id.* Under the two-step framework in *Advanced Bionics*, factor (c) is considered at the second step, where the Petitioner must show the Patent Office erred in its evaluation of the reference. *Id.* at 10.

Further, it is not surprising that the Examiner did not discuss Nakamura and WD4 in an Office Action after reviewing it – Nakamura and WD4 contain substantially the same disclosure as other references the Examiner had already reviewed multiple times in connection with the '714 Patent and its priority applications. In the Notice of Allowance, the Examiner allowed the '714 Patent without substantive discussion of Nakamura, citing as reasons for allowance

"limitations analogous to the claims of" the '833 Patent for comparing motion information "without making a comparison of each pair from the set of spatial motion vector prediction candidates[.]" Ex-1002 at 118; Ex-2001 at 35.

Accordingly, in addition to having actually been before and considered by the Patent Office during the prosecution of the Challenged Claims, the relied-upon disclosure from Nakamura was included in multiple references cited to the Patent Office during the prosecution of the '714 Patent and each of its priority applications. *See, e.g.*, Ex-1015 at 308. Nakamura in combination with WD4 is nothing more than the definition of a cumulative reference to Han, Tai, and Huang. Stated simply, the Board should not allow Petitioner to recycle **related references** filed by **the same inventors**, and **cumulative to the disclosure of references cited to the Patent Office**, in an attempt to challenge the patentability of the claims of the '714 Patent. Ex-2001 at 35-36.

2. Petitioner has not established that the Patent Office erred during prosecution.

Given that the same or substantially the same art as Petitioner relies on was previously presented to the Patent Office, the burden shifts to Petitioner to show that the Office erred in a manner material to the patentability of the challenged claims. *Advanced Bionics*, Paper 6 at 8.

Despite acknowledging at least some of the overlap in the references and presenting an *Advance Bionics* argument, Petitioner incorrectly stated that Rusert and WD4 were not cited or considered during prosecution. Pet. 87. The entirety of Petitioner's analysis of whether the Patent Office erred is the statement that "[t]he Examiner did not consider the IDS before the Notice of Allowance[,]" "[t]he '833 patent was allowed without any substantive discussion of Nakamura[,]" and "Nakamura was not considered in combination with WD4." Pet. at 14, 87. These conclusory statements cannot satisfy Petitioner's burden to establish material error by the Examiner. *Autel Intelligent Tech. Corp., Ltd. v. Orange Elec. Co., Ltd.*, IPR2021-01545, Paper 8, 27 (P.T.A.B. April 8, 2022) (denying institution under 325(d) and noting that "Petitioner's conclusory argument … also fails to demonstrate that the Office erred."); *Panduit Corp. v. Corning Optical Commc'ns LLC*, IPR2021-01562, Paper 20, 17 (P.T.A.B. April 6, 2022) (denying institution under 325(d) and finding "Petitioner's assertion of Examiner error in the Reply to be conclusory and non-persuasive" where "Petitioner cite[d] no evidence in support of its contention that the Examiner erred[.]"); *see also Universal Imaging, LLC v. Lexmark Int'l, Inc.*, IPR2019-01387, Paper 7, 15 (P.T.A.B. Feb. 27, 2020) ("Although Petitioner is correct that the Examiner did not reject any claims of the '921 patent based on [the asserted reference], that is not the end of our analysis.").

Although the Examiner did not issue a rejection based on Nakamura, this is insufficient to show material error. *Sony Interactive Ent. LLC v. Terminal Reality, Inc.*, IPR2020-00711, Paper 15, 12 (P.T.A.B. Oct. 13, 2020) (Petitioner's argument that asserted references were not substantively evaluated or applied in a rejection failed to sufficiently identify Examiner error).

The absence of an argument suggesting error on the part of the Patent Office is in and of itself fatal to Petitioner's arguments under *Advanced Bionics*. Here, the Patent Office was repeatedly presented with the same or similar, cumulative disclosures to those raised in the Petition during prosecution of the '714 Patent and its priority and subsequent applications. The Examiner applied these and similar references in a series of rejections of the '714 Patent's original priority application, and undoubtedly reviewed the Information Disclosure Statements filed by PO and cited references during the prosecution of each application in the '714 Patent's family. Ex-1015 at 308. PO demonstrated to the Examiner that the art was lacking and failed to disclose the patented inventions, and the claims of the '714 Patent, as well as the claims of its priority and subsequent patents, issued over substantially identical art to that presented in the Petition Grounds. Ex-1015.

Even if Petitioner shows some disagreement about the treatment of the art, it will not be enough to overcome the "reasonable mind" standard this Board has

established. *Advanced Bionics* at 8-10 ("If reasonable minds can disagree regarding the purported treatment of the art or arguments, it cannot be said that the Office erred in a manner material to patentability. At bottom, this framework reflects a commitment to defer to previous Office evaluations of the evidence of record unless material error is shown.").

Accordingly, the Board should defer to the previous and subsequent Office evaluations and deny institution.

B. Petitioner Has Not Established A Reasonable Likelihood That The Challenged Claims Are Unpatentable In Light Of Ground 1.

1. Petitioner's Ground 1 argument fails because it conflates the "motion vector prediction list" and the determined "subset."

Petitioner relies on Rusert (Ex-1004) to prove their first invalidity ground against the '714 Patent. Petitioner's argument is fatally flawed because it relies on the same evidence in Rusert to show both the "motion vector prediction list" limitation and the "subset" limitation recited in each asserted independent claim of the '714 Patent. Pet. at 30, 35; Ex-2001 at 36.

In order to show the limitation "motion vector prediction list," Petitioner relies on the "PMV_CANDS" list of Rusert, asserting that "Rusert's PMV_CANDS is the claimed 'motion vector prediction list.'" Pet. 30. At the same time, however, Petitioner relies on Rusert's "PMV_CANDS" in order to show the "subset"

limitation. *Id.* at 35. Petitioner further contends that "the subset is stored as a list of PMV candidates called PMV_CANDS." Pet. at 35; Ex-2001 at 36-37.

"Where a claim lists elements separately, 'the clear implication of the claim language' is that those elements are 'distinct component[s]' of the patented invention." *Becton, Dickinson & Co. v. Tyco Healthcare Grp., LP*, 616 F.3d 1249, 1254 (Fed. Cir. 2010) (internal citations omitted). In *Becton, Dickinson*, the claim at issue was directed to a "shieldable needle assembly" with "a needle cannula," "a guard," "a hinged arm …articulated to said guard," and "spring means connected to said hinged arm for urging said guard along said needle cannula." *Id.* at 1254. The affirmatively recited structures of the claim were thus distinct from and interacted with each other. Tyco sought a claim interpretation that would allow the "spring means" and the "hinged arm" to be the same structure, but the Federal Circuit in rejecting this argument held that it would render the spring means "functionally meaningless." *Id.* at 1257.

Similarly, Respondents' interpretation of the Asserted Claims of the '714 Patent to allow the "motion vector prediction list" and the "subset of spatial motion vector prediction candidates" to be met by the same structure in Rusert renders these distinct claim elements functionally meaningless. The claims of the '714 Patent are concerned with "generating a motion vector prediction list for an image block." Ex-

1001 at 4:19-20. This "motion vector prediction list" is generated by selecting a candidate to be added to the list and then "performing a limited number of motion information comparisons between candidate pairs to remove the redundant candidates rather than comparing every single candidate pair." *Id.* at 4:23-26. The subset consists of the candidates to which a selected candidate will be compared, and thus must consist of a portion (*i.e.*, a subset), of the original candidate set, such that when the selected candidate is paired with each member of the subset for comparison, the result is less than "every single candidate pair." *See id.*; *see also id.* at 17:53-65. The subset cannot, therefore, be the distinct "motion vector prediction list" being constructed—it can be "***any [other] subset*** of the candidates as long as not all possible candidate pairs are compared." *See id.* at 17:62-65. Meaning, after the comparisons are performed, only the candidates that are determined not to be duplicates are included in the list. Petitioner has improperly conflated these terms to support their otherwise-insufficient theory of invalidity based on Rusert, and its argument should be rejected as a result. Ex-2001 at 37-38; *see Becton, Dickinson*, 616 F.3d at 1254; *see also Kyocera Senco Indus. Tools Inc. v. Int'l Trade Comm'n*, 22 F.4th 1369, 1382-1383 (Fed. Cir. 2022) (finding separately recited "safety contract element" and "fastener driving mechanism" cannot be satisfied by the same element).

2. Petitioner's Ground 1 argument fails because it redefines "block associated with the first spatial motion vector prediction candidate" to "block"

Petitioner's first Ground further relies on Petitioner's interpretation that "the block" in limitation 9[b] means the "current block," as in the "block of pixels" introduced in 9[a]. Pet. at 22. This interpretation would make element 1[b] read as, "determining a subset of spatial motion vector prediction candidates based on a location of the current block associated with the first spatial motion vector prediction candidate[,]" which makes no sense in the context of the '714 Patent or the general art. Ex-2001 at 38.

The '714 Patent makes clear that the candidate motion vectors for the current frame use either "one or more … motion vectors of one or more neighbour blocks … of the current block in the same frame and/or co-located blocks … of the current block in one or more other frames[,]" *i.e.*, these are motion vectors associated with other blocks, rather than the current block, to define a list of suitable motion vector candidates for the current block, as would be understood by a POSITA. Ex-1001 at 12:51-56; Ex-2001 at 38. To the contrary, in Petitioner's analysis of Rusert "the subset of PMV candidates is based on … the location of the current block." Pet. at 37-38. This would mean that the "determining a subset" element is satisfied regardless of whether the "location of the block" is associated with a first spatial

motion vector candidate or not. However, this analysis reads outside of the claim language, "associated with the first spatial motion vector prediction candidate." Therefore, as defined in the '714 Patent, there is no "current block associated with the first spatial motion vector prediction candidate." Ex-2001- at 39.

Petitioner further contends, regardless of the selection of a first spatial motion vector prediction candidate (first element), the subset of spatial motion vector prediction candidates (second element) will be determined in the exact same way, since the distance and position of each candidate depend only on allowed positions relative to the current block. Pet. at 36. As an alternative argument for the second element, Petitioner suggests that the subset of candidates with which a current candidate is compared, depends on the location of the block associated with the first candidate. *Id.* Petitioner provides an example, noting that the PMV candidate for block "3" is compared with a subset of PMV candidates for blocks "1" and "2." *Id.* at 36-37. But, unlike the '714 Patent, the subset (subset of PMV candidates for blocks "1" and "2") does not actually depend in any way on the location of the first candidate (PMV candidate for block "3"). Under Rusert's method, the list of candidates (1, 2, 3, 4, etc.) is always constructed according to the same rules and the same order. Ex-1004. For example, when candidate 3 is reached, it will *always* be

compared with 1 and 2, regardless of the location of the first candidate. Ex-2001 at 39-40.

Accordingly, Rusert fails to teach at least element 9[b] and the Petition has failed to show a reasonable likelihood that the Challenged Claims are unpatentable based on this Ground. *Id.* at 40.

3. Petitioner fails to demonstrate that the combination of Rusert and Karczewicz "determining a subset of spatial motion vector prediction candidates based on a location of the block associated with the first spatial motion vector prediction candidate"

The combination of Rusert and Karczewicz does not teach the determination of "a subset of spatial motion vector prediction candidates based on the location of the block associated with the first spatial motion vector prediction candidate" as required by the independent claims, because Petitioner conflates the alleged subset of Rusert with the set of spatial motion vector candidates, and because the "subset" as described in the Petition is neither determined by the selected first spatial motion vector prediction candidate nor based on the location of the block associated with that candidate. Pet. at 34-37; Ex-2001 at 40,

The '714 Patent discloses a set of spatial motion vector prediction candidates obtained from neighboring blocks located around a current block of pixels being either encoded or decoded. *See* Ex-1001 at 13:26-31. The following figure from the

’714 Patent is annotated such that the neighboring blocks from which the set of spatial motion vector prediction candidates is obtained are highlighted in green. Ex-2001 at 40-41.

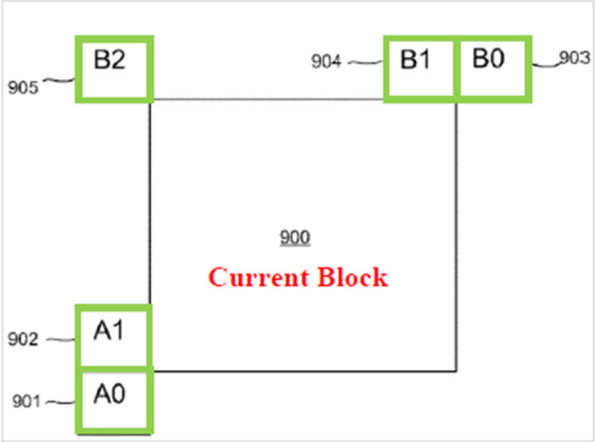

’714 Patent, Fig. 9 (Annotated to show the set of motion vector prediction candidates) (Ex-1001).

When building the claimed motion vector prediction list, a spatial motion vector prediction candidate is selected for consideration and compared against a subset of the other spatial motion vector prediction candidates by checking whether each member of the subset has the same motion information as the selected candidate. *See id.* at 15:50-16:55. The purpose of this comparison is to avoid adding a spatial motion vector prediction candidate to the motion vector prediction list if it would be redundant. *See id.* at 4:19-26; Ex-2001 at 41.

The subset is determined “based on the location of the block associated with the first spatial motion vector prediction candidate,” so that for each candidate in

question, there is a subset of the full candidate set which can be used for comparison in order to avoid redundancy, while also reducing the computational work required to perform comparisons. *See* Ex-1001 at 4:19-26. For example, for the candidate located to the left (A1), the '714 Patent teaches that a subset containing B1 can be used for comparison. *See id.* at 15:50-16:7. Similarly, for the candidate located on the top left (B2), the '714 Patent teaches that the subset containing A1 and B1 can be used for comparison. *See id.* at 16:40-49. In this way, the location of a selected spatial motion vector prediction candidate is determinative of the members of the subset used for comparison, which directly contradicts Petitioner's construction of "the block" in element 9[b]. *See supra* §III(B)(2); Ex-2001 at 41-42.

Rusert approaches the construction of a motion vector prediction list differently from the claimed technique of the '714 Patent, considering spatial motion vector candidates obtained from neighboring blocks in a scanning order based on their distance from the current block, determining if they should be added to the list, and then moving to the next PMV candidate in its scan order until the process is completed. *See* Ex-1004 at ¶ 44. Figure 3n of Rusert provides an exemplary depiction of this distance-based scanning method, with the closest PMV candidates being evaluated first, and the farthest last (*i.e.*, in the order 1, 2, 3 . . . 9, a, b . . .), in

a counter-clockwise spiral starting from the top row. *See id.* at ¶ 58; Ex-2001 at 42-43.

Rusert, Fig. 3n (Ex-1004).

When determining whether to add a PMV candidate to the list, Rusert compares the candidate to each previously-added PMV candidate. Thus, if candidate 1 is added to the list, candidate 2 will be compared to candidate 1; if candidate 2 is also added, then candidate 3 will be compared to candidates 1 and 2. Ex-1004 at ¶¶ 71-72. If the comparison determines that the candidate under consideration is too similar (according to some similarity measure) to one already added, it can be excluded. *See* Ex-1004 at ¶¶ 71-72; Ex-2001 at 43.

Petitioner further improperly conflates the claimed "motion vector prediction list" with the claimed "subset of spatial motion vector prediction candidates." *See* Pet. at 30, 35. When attempting to establish that Rusert teaches the claimed "motion

vector prediction list," Petitioner asserts that Rusert "teaches the claimed 'motion vector prediction list' through its disclosure of PMV_CANDS." Pet. at 30. Rusert defines PMV_CANDS as the "set of PMV candidates" from which a PMV to be used for encoding or decoding a block is signaled, that is, PMV_CANDS refers to the list of PMV candidates that have been encoded or, in the case of decoding, that is being built to determine the signaled PMV candidate. *See* Ex-1004 at ¶ 4. However, Petitioner goes on to use the same PMV_CANDS to show the determined subset, stating Rusert's "subset includes the previously-coded PMV candidates." Pet. 33. The determined subset of the independent claims is not the same list as the motion vector prediction list, as described above; Petitioner cannot claim that PMV_CANDS satisfies the "subset" when Petitioner has already attempted to use it to satisfy the "motion vector prediction list." Ex-2001 at 43-44.

Even if Rusert's PMV_CANDS list could be correctly identified with the determined "subset" of the claims, Petitioner is incorrect in asserting that it is determined based on the location of a selected spatial motion vector prediction candidate for two reasons: 1) the content of PMV_CANDS at the time that a PMV candidate is considered has already been determined without regard for the PMV candidate under consideration, and 2) the content of the PMV_CANDS list is based

on the values of the previous candidates, not the location of the current candidate under consideration. *See* Pet. 37; Ex-2001 at 44.

Addressing the first point, Rusert's PMV_CANDS list is constructed by scanning neighboring blocks in an order determined by their distance to the current block. *See* Ex-1004 at ¶ 61, Fig. 3n. The following annotated Fig. 3n of Rusert shows the content of the PMV_CANDS list—assuming that each neighboring block has a dissimilar motion vector—at each of the first four iterations of Rusert's methodology (Ex-2001 at 44):

Iter	Block being scanned	Content of PMV_CANDS
#0	Block #1	[ ] (empty list)
#1	Block #2	[1]
#2	Block #3	[1, 2]
#3	Block #4	[1, 2, 3]

Rusert, Fig. 3n (Ex-1004).

As shown above, at the time that neighboring block 2 has finished being considered, the content of PMV_CANDS for block 3 is already known: it will be the set of candidates 1 and 2 (assuming that 1 and 2 are dissimilar). The location of, and

indeed any information related to, block 3 is irrelevant to the contents of PMV_CANDS at the time that block 3 is under consideration. Ex-2001 at 45.

Addressing the second point, rather than being based on the location of a PMV candidate under consideration, the set of PMV candidates used for comparison in Rusert is determined based on the ***value*** of each PMV candidate that has already been considered and added to the list. Ex-1004. If candidate 3 is compared to candidates 1 and 2, this is not because candidate 3 is located in the top right, but because candidates 1 and 2 are dissimilar and thus neither is excluded from being added to PMV_CANDS. *See* 1004 at ¶¶ 70-72; Ex-2001 at 45.

C. Petitioner Has Not Established A Reasonable Likelihood That The Challenged Claims Are Unpatentable In Light Of Ground 2.

In addition to Rusert and Karczewicz, Petitioner's second Ground further relies on Lin (Ex-1006). Ground 2 only relates to dependent claim 11 and accordingly fails for the same reasons as Ground 1. Therefore, Ground 2 rises and falls with Ground 1. *See In re Fine*, 837 F.2d 1071, 1076 (Fed. Cir. 1988) (indicating that "[d]ependent claims are nonobvious under section 103 if the independent claims from which they depend are nonobvious.").

D. Petitioner Has Not Established A Reasonable Likelihood That The Challenged Claims Are Unpatentable In Light Of Ground 3.

1. Petitioner fails to demonstrate that the Challenged Claims are obvious in view of Nakamura and WD4 because Petitioner cannot demonstrate that WD4 is prior art

WD4 is not prior art to the ’714 patent because WD4 was not publicly accessible before the priority date of the ’714 Patent.

To be a prior art reference under 35 U.S.C § 102(a), a reference must be shown to be published, which requires that the reference be accessible to the public; while this does not require that a document was actually received by certain members of the public, it does require a satisfactory showing that the document had been “disseminated or otherwise made available to the extent that persons interested and ordinarily skilled in the subject matter or art, exercising reasonable diligence, can locate it.” *See Samsung Elecs. Co. v. Infobridge Pte. Ltd.*, 929 F.3d 1363, 1368-1369 (Fed. Cir. 2019). Respondents cannot make this requisite showing.

In support of each petition, Petitioner has provided the same declaration of Dr. Vivienne Sze, which includes a section addressing the “public availability of JCT-VC documents” including WD4. *See Amazon.com Services, LLC v. Nokia Technologies Oy* IPR20204-00604, Paper 1014 at 5 (PTAB Apr. 8, 2024) (“Sze Declaration (604)”); *Amazon.com Services, LLC v. Nokia Technologies Oy* IPR20204-00605, Paper 1014 at 5 (PTAB Apr. 8, 2024) (“Sze Declaration (605)”).

In support of the proposition that WD4 was publicly available, Dr. Sze presents screenshots of the process she took to download a copy of JCTVC-F803-v3.zip, version 3 of the zip archive containing the documents associated with WD4, through the JCT-VC document management website (http://phenix.int-evry.fr/jct/). *See* Sze Declaration (604) at 2 (Ex-1014); Sze Declaration (605) at 2 (Ex-1014). Dr. Sze also alleges that "persons interested in tracking the developments of the latest video coding standard would regularly visit the JCT-VC website to ensure that products and services they were developing were consistent with the HEVC Standard under development." Sze Declaration (604) at 9 (Ex-1014); Sze Declaration (605) at 9 (Ex-1014). This is improper expert testimony, opining on the ultimate question of public accessibility, despite Dr. Sze not being included in Respondents' Corrected Joint Expert Identification. Ex-2013.

Illustrating the search she performed to find the WD4 document, Dr. Sze explains that she first navigated to the specific page for the meeting associated with WD4. To do this, she followed menu items to navigate from the website's front page, to "All Meetings" and then to "Meeting Number 6 ("Torino"). *See* Sze Declaration (604) at 10 (Ex-1014); Sze Declaration (605) at 10 (Ex-1014). She then searched that meeting's documents for terms such as "Working Draft" and "High-Efficiency Video Coding" to locate WD4 by its title. *See* Sze Declaration (604) at 15-16 (Ex-

1014); Sze Declaration (605) at 15-16 (Ex-1014). This search, which relies on prior knowledge of the existence of WD4 to locate the document by its meeting location and highly generic title, does not constitute support for the public availability of WD4.

In *Samsung v. Infobridge*, the Federal Circuit directly addressed the public accessibility of the very same WD4 document after Samsung appealed the Board's finding that WD4 was not publicly accessible. *See* 929 F.3d at 1365. With respect to the JCT-VC site, the Board found that "identifying a meeting location was key to navigating the JCT-VC site," and that "a person who did not know to look under the Torino meeting would not have found the WD4 reference." *See id.* at 1371. Samsung also argued that testimony from Benjamin Bross, one of WD4's authors, supported the public availability of WD4, which the court dismissed stating "a work is not publicly accessible if the only people who know how to find it are the ones who created it," and that the Board "properly focused on whether those outside of the JCT-VC knew about the JCT-VC website." *Id.* at 1372. In confirming that the Board's findings were consistent with substantial evidence, the court in *Samsung* provided the following summary: "the structure of the [JCT-VC] website, which organized content by meeting and lacked a way to search by subject matter, meant

that a person would only find the WD4 reference if they knew where to look." *Id.* at 1373.

The present facts match those of *Samsung*, and the Board should similarly determine that the WD4 reference was not publicly available as a matter of law. Dr. Sze's declaration reflects the same shortcomings noted by the Board in *Samsung*, requiring that a user should know to view documents pertaining to "Meeting Number 6 ('Torino')" in order to begin their search. *See* Sze Declaration (604) at 10 (Ex-1014). The user would then be shown 780 documents for that meeting, and be required to search for WD4 using terms in its highly generic title "Working Draft 4 of High-efficiency Video Coding" *See id.* at 11, 15-16. A POSITA would not have thought to search the Torino meeting for generic terminology such as "working draft" or "high efficiency video coding" in search of prior art, and WD4 "would not have been reasonably accessible even if a skilled artisan knew about the JCT-VC website." *Samsung*, 929 F.3d at 1372.

Further, the declaration of Vivienne Sze has the same shortcomings as the testimony of Benjamin Bross from the *Samsung* case. *See id.* at 1372 (stating that the Board "properly focused on whether those outside the JCT-VC knew about the JCT-VC website."). Dr. Sze describes herself as "an active member of JCT-VC since October 2010" and states that she attended every meeting between October 2010 and

the end of 2012. *See* Sze Declaration (604) at 3 (Ex-1014). Thus, Sze's declaration is hardly evidence that a POSITA, particularly one outside the JCT-VC, would have known to access WD4.

Petitioner also raises arguments in favor of public availability, but these arguments likewise fail. *See* Pet. at 19-20. Petitioner's arguments primarily repeat the ineffective reasoning from Dr. Sze's declaration, but additionally suggests that the existence of published papers which cite Nakamura and WD4 establish the public availability of WD4 as well as suggesting that the citation to WD4 on the face of the '714 Patent establishes its prior art stats. This is not the case, as the fact that a reference has been cited before does not establish that a POSITA would be able to find WD4 without "already knowing what to look for and where to look for it." *See Samsung*, 929 F.3d at 1372. Further, it is not apparent that the version of WD4 cited on the face of the '714 Patent is the same "version 3" which Respondents allege renders the Asserted Claims of the '714 Patent obvious—to not only find WD4, but specifically the third version, would necessitate a POSITA to check and re-check the JCT-VC website very frequently in order to take note of additional versions. This highly attenuated basis for public availability is simply insufficient to carry Respondents' burden.

Because Petitioner offers threadbare evidence in support of the public availability of WD4, evidence which has already been considered in precedential case law, the ALJ should find that Petitioner is unable to show that the WD4 reference was publicly accessible as a matter of law. Accordingly, Petitioner's arguments as to the invalidity of the '714 Patent which rely on the WD4 reference should be rejected.

2. Petitioner fails to demonstrate that the Challenged Claims are obvious in view of Nakamura and WD4 because Petitioner has not demonstrated motivation to combine Nakamura and WD4

Although Nakamura and WD4 are both directed to the ongoing development of improved video coding standards, the suggestion by Petitioner that a POSITA would therefore be motivated to combine the two documents is unfounded. Nakamura and WD4 include competing techniques for building a merge list, and cannot be combined without omitting aspects of one or the other.

Petitioner suggests that once Nakamura was proposed, it would have been obvious to a POSITA to combine it with WD4 or, indeed, any working draft of the HEVC standard. Pet. at 60-61. This is untrue, as demonstrated by WD4 itself. Petitioner agrees that Nakamura was originally proposed as an improvement to Working Draft 3 of the HEVC standard, but fails to address the reality that Nakamura's proposed simplification to the derivation method for merge mode

candidate was expressly evaluated by experts in the field and then *not* included in Working Draft 4. *See id.* at 64; Ex-2001 at 46.

In actuality, rather than following the suggestion of Nakamura, which "tries to reduce the number of candidates in the spatial derivation process," WD4 reflects a decision not to reduce the number of candidates during the spatial derivation process, instead adopting a technique that more strongly resembles the same HM3.0 technique with which Nakamura contrasts its proposed technique. *See* Ex-1007, Abstract; *compare* Ex-1007 at § 2.2.1 *with* Ex-1010 at § 8.4.2.1.1; Ex-2001 at 46.

JCTVC-F744-v3 ("F744") details the JCTVC's evaluation of the Nakamura proposal. Despite Petitioner's assertion to the contrary, the unification of the spatial neighbor locations used for merge mode and Motion Vector Prediction ("MVP") does not reflect an adoption of Nakamura's proposal that would motivate a POSITA to combine Nakamura with WD4. *See* Pet. at 60-62. In F744, the JCTVC adopted only an extremely limited aspect of Nakamura: the "candidate search order and TMVP refidx derivation." *See* Ex-2009 at 8; *see also* Ex-2001 at 47.

On the other hand, the principal technique of Nakamura, in which only "two spatial candidates and a temporal candidate are derived," was flatly not adopted, with WD4 making use of 5 spatial candidates where WD3 and Nakamura suggested using 4 and 2 spatial candidates respectively. *See* Ex-1010 at Figure 8-5; Ex-1007,

Table 2. Given that the JCTVC considered Nakamura for integration into the Working Document and adopted only a narrow portion thereof, a POSITA would not be compelled to reopen the JCTVC's consideration of Nakamura and adopt further aspects of the proposal that were previously rejected. Ex-2001 at 47.

3. Petitioner fails to demonstrate that the Challenged Claims are obvious in view of Nakamura and WD4 because Petitioner fails to demonstrate how either reference teaches "determining to include or exclude . . . based on the comparing."

With respect to the limitations of the Challenged Claims which describe "compar[ing] motion information of the first spatial motion vector prediction candidate with motion information of the spatial motion vector prediction candidate in the determined subset of spatial motion vector prediction candidates without making a comparison of each possible candidate pair from the set of spatial motion vector prediction candidates" the Nakamura combination again fails. Petitioner contrasts the comparisons required by both Nakamura's proposed method for merge mode as well as the prior HM3.0 method, as shown in Table 2 of the Nakamura Input Document (Ex-2001 at 47-48):

Table 2 presents the comparison between HM3.0 and proposed technique for merge mode.

Table 2 Comparison between HM3.0 and proposed technique for merge mode

	HM3.0	Proposal 1
The number of spatial candidates	4 in 4 [positions]	2 in 5 [positions]
Spatial derivation order	A, B, C, D	A, B, C, D, E
The number of times of comparison of redundant candidates in the spatial derivation process	0 [time]	0 [time]
The number of temporal candidates	1	1
Merging candidate list order	A, B, Col, C, D	S_0, S_1, Col
The number of times of comparison in the removal process	10 [times] (A vs B, Col, C, D, B vs Col, C, D, Col vs C, D, and C vs D)	3 [times] (S_0 vs S_1, S_0 vs Col, and S_1 vs Col)

Notes:

S_0: The first spatial candidate found in the spatial derivation process

S_1: The second spatial candidate found in the spatial derivation process

Nakamura Input Document, § 2.2.1 (Ex-1007).

Petitioner correctly assesses that the HM3.0 technique performs "comparisons of all 10 pairs" in order to evaluate whether each of the A, B, Col, C, and D candidates should be included on the merge list. *See* Pet. 70-72. Accordingly, HM3.0 manifests exactly the behavior which the claims of the '714 Patent forbid: "making a comparison of each possible candidate pair from the set of spatial motion vector prediction candidates." Ex-1001 at Claims 15, 29; Ex-2001 at 48.

Table 3 Comparison of HM3.0 between HM3.0 and proposed technique for MVP

	HM3.0	Proposal 2
The number of spatial candidates	2 in 5 [positions]	2 in 5 [positions]
Grouping of the neighbors in the spatial derivation process	Group A: Left (A_0, A_1) Group B: Upper (B_0, B_1, B_2)	without grouping
Spatial derivation order	Group A: A_0, A_1 Group B: B_0, B_1, B_2	C, D, A, B, E
The number of times of checking per spatial neighbors in the spatial derivation process	2 [times]	1 [time]
The number of times of comparison of redundant candidates	6 [times] (mvLXA vs mvLXB_0, mvLXA vs mvLXB_1, and mvLXA vs mvLXB_2) x 2	0 [time]

Nakamura Input Document, Table 3 (Ex-1007).

However, with respect to Nakamura's Proposal 1, Petitioner misses the mark by suggesting that less than each possible candidate pair is compared. *See* Pet. at 71-72. This erroneous conclusion appears to be based on the lack of comparison between each of the A-E neighbors, which results from only "2 in 5" neighbors actually being used as "spatial candidates." *See id.*; Ex-1007 at Table 2. In actuality, of the 3 merging candidates (S0, S1, and Col), every permutation of these candidates is indeed compared per Nakamura's proposal: "S0 vs S1, S0 vs Col, and S1 vs Col." In other words, Nakamura does not reduce computation by comparing less than each possible candidate pairs, but rather proposes to reduce the number of possible candidate pairs to 3 and then comparing every possible candidate pair. Ex-2001 at 49.

Petitioner's argument also fails because Nakamura does not teach "determin[ing] to include or exclude the first spatial motion vector prediction candidate in the motion vector prediction list based on comparison of the motion information of the first spatial motion vector candidate with motion information of the spatial motion vector prediction candidate." Pet. at 71. Independent claims 9, 23, and 30 teach selecting a spatial motion vector prediction candidate, performing a comparison to a subset, and then "determin[ing] whether to include this spatial motion prediction candidate in the merge list or not" based on that comparison. *See* Ex-1001 at 15:55-56. Conversely, Nakamura teaches including each of S0 and S1 on the merge list, and then, only afterwards, ***removing*** each on the basis of a comparison of the two candidates. Ex-2001 at 49-50.

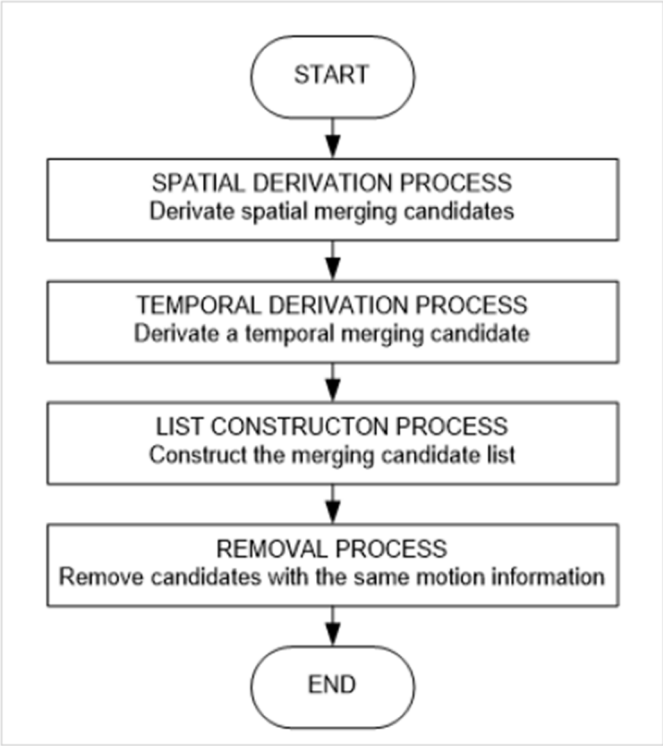

JCTVC-F419, Figure 1(a) (Ex-1007).

As shown in Figure 1 of Nakamura, above, after spatial and temporal candidates are derived, each is included in the merging candidate list. Following this "list construction process" is the subsequent "removal process," in which candidates are compared to one another and candidates with the same motion information are removed. This differs from independent claims 9, 23 and 30, which instead exclude the selected spatial motion vector prediction candidate from addition to the list in the first place if the non-comprehensive comparison of the claims indicates that the candidate under consideration would have redundant motion information with

another candidate. Accordingly, the Nakamura combination fails to teach the independent Challenged Claims of the ’714 Patent. Ex-2001 at 50-51.

Petitioner’s argument further fails because the Nakamura combination fails to teach element 9[b], “determining a subset of spatial motion vector prediction candidates.” Petitioner suggests that S0 is a subset of the spatial motion vector prediction candidates, from the set S0 and S1. Pet. 68. Petitioner also indicates that S1 is the first spatial motion vector prediction candidate, even though Nakamura discloses that S1 is derived **after** S0, as illustrated on page 7 of the Nakamura slides, showing the check order (arrow) generating S0 (first candidate) **then** S1 (second candidate). Pet. at 64, 66; Ex-1009; Ex-2001 at 51. Rather, elements 9[a] and 9[b] have a causal order, since one cannot “determine a subset … based on a location … associated with the first spatial motion vector prediction candidate” until one has “selected a first spatial motion vector candidate.” On the contrary, in Nakamura, S0 cannot be and is not determined based on the **location** of the alleged first candidate (S1) since at the point when Nakamura determines S0, S1 is not yet derived, so the location of S1 is not known when S0 is determined. Ex-1007. Thus, Petitioner’s alleged S0 subset cannot be determined based on anything associated with S1 at the point at which Nakamura derives S0, since S1 has not been derived and does not exist at this point. Ex-2001 at 52.

IV. CONCLUSION

For any or all of the above-described reasons, PO respectfully requests that the Board deny institution.

Dated: August 12, 2024

Respectfully submitted,

/s/Scott W. Hejny
Scott W. Hejny
Reg. No. 65,320
shejny@mckoolsmith.com
Eric S. Hansen
Reg. No. 63095
ehansen@mckoolsmith.com
McKool Smith, P.C.
300 Crescent Court, Suite 1500
Dallas, Texas 75201
Telephone: (214) 978-4000
Facsimile: (214) 978-4044

Counsel for Patent Owner, Nokia Technologies Oy

CERTIFICATION OF WORD COUNT

The undersigned hereby certifies that the portions of the above-captioned **PATENT OWNER'S PRELIMINARY RESPONSE specified in 37 C.F.R.** §42.24 have 13,918 words, in compliance with the 14,000 word limit set forth in 37 C.F.R. §42.24(b)(1). This word count was prepared using Microsoft Word 2010.

Dated: August 12, 2024

Respectfully submitted,

/s/Scott W. Hejny
Scott W. Hejny
Reg. No. 45,882

CERTIFICATION OF SERVICE

The undersigned hereby certifies that a copy of this **PATENT OWNER'S PRELIMINARY RESPONSE PURSUANT TO 37 C.F.R. § 42.10(b)** has been served on Petitioner via email on the following counsel of record for Petitioner:

Harper Batts
hbatts@sheppardmullin.com

Chris Ponder
cponder@sheppardmullin.com

Jeffrey Liang
jliang@sheppardmullin.com

Dated: August 12, 2024

Respectfully submitted,

/s/Scott W. Hejny
Scott W. Hejny
Reg. No. 45,882