**UNITED STATES PATENT AND TRADEMARK OFFICE**

---

**BEFORE THE PATENT TRIAL AND APPEAL BOARD**

---

AMAZON.COM, INC., AMAZON.COM SERVICES, LLC,

Petitioner

v.

NOKIA TECHNOLOGIES OY,

Patent Owner

---

Case: IPR2024-00604
IPR2024-00605

U.S. Patent No. 10,536,714

---

# DECLARATION OF DR. IAIN RICHARDSON

# TABLE OF CONTENTS


I. INTRODUCTION ..... 1

II. EDUCATIONAL BACKGROUND AND QUALIFICATIONS ..... 2

III. MATERIALS REVIEWED AND TIME OF INVENTION ..... 5

IV. LEGAL STANDARDS ..... 6

- A. Overview ..... 6
- B. Patent Claims ..... 6
- C. Burden of Proof for Invalidity ..... 8
- D. Claim Construction ..... 8
- E. Person of Ordinary Skill in the Art ..... 8
- F. Anticipation ..... 9
- G. Obviousness ..... 10

V. PERSON OF ORDINARY SKILL IN THE ART (POSITA) ..... 13

VI. CLAIM CONSTRUCTION ..... 14

VII. BACKGROUND OF THE RELEVANT TECHNOLOGY ..... 14

- A. Overview of Video Coding and Video Coding Standards ..... 14
- B. Overview of Motion Prediction in Video Coding ..... 18
- C. Technical Challenges in Motion Prediction ..... 25

VIII. Overlap Between References Cited in Prosecution and the References Relied Upon in the Petition ..... 27

- A. The portions of the Rusert reference relied upon in the Petition has substantially the same generation of a potential motion vector candidate list teaching as found in Han, Tai, and Huang references cited in prosecution and on the face of the ’714 Patent. ..... 27
- B. The portions of the Karczewicz reference relied upon in the Petition have substantially the same disclosure of prediction




Nokia Exhibit 2001, p. 2
Amazon.com v. Nokia
IPR2024-00605

units taught in the Han reference cited in prosecution and on the face of the ’714 Patent. ..... 31

C. The portions of the Lin reference relied upon in the Petition have substantially the same disclosure of prediction units taught in the Han reference cited in prosecution and on the face of the ’714 Patent. ..... 32

D. The portions of the Nakamura and WD4 references relied upon in the Petition have substantially the same disclosure of reducing the number of candidates in the spatial derivation process to reduce the number of comparisons in the removal process taught in the Han, Tai, and Huang references cited in prosecution and on the face of the ’267 Patent. ..... 33

IX. The Grounds in the Petition do not anticipate or render obvious the Challenged claims ..... 34

A. Ground 1: Rusert Combined with Karczewicz ..... 34

1. Rusert and Karczewicz do not teach both the “motion vector prediction list” and the determined “subset,” as required by the claims ..... 34

2. Rusert and Karczewicz do not teach both the “block associated with the first spatial motion vector prediction candidate,” as required by the claims ..... 36

3. Rusert and Karczewicz do not teach “determining a subset of spatial motion vector predication candidates based on a location of the block associated with the first spatial motion vector predication candidate,” as required by the claims ..... 38

B. Ground 3: Nakamura and WD4 - Nakamura and WD4 do not teach “determining to include or exclude … based on the comparing,” as required by the claims ..... 44

X. CONCLUSION ..... 52



Nokia Exhibit 2001, p. 3
Amazon.com v. Nokia
IPR2024-00605

I, Dr. Iain Richardson, declare as follows:

## I. INTRODUCTION

1. I have been retained on behalf of Nokia Technologies OY and asked to provide opinions in respect of two Inter Partes Review (IPR) proceedings, IPR2024-00604 and IPR2024-00605, both of which relate to U.S. Patent No. 10,536,714, the ’714 Patent.

2. This Declaration summarises the independent opinions that I have formed to date, based on the material currently available to me. I reserve the right to modify my opinions, if necessary, based on further review and analysis of information that I receive subsequent to the filing of this Declaration, including in response to any positions taken by Petitioners or their experts that I have not yet been provided with. I further understand that an institution decision is “all-or-nothing” and so I have focused my opinions on the independent claim at issue in this petition. Should the petition be instituted, I anticipate offering additional opinions regarding both the dependent and independent claims. I have also been asked to compare the art raised and applied in the petition to art that was before the PTO during the prosecution of the ’714 Patent and its family members.

3. My findings, as explained below, are based on my study, experience, knowledge and background in the fields discussed below. I am informed by my

education and my extensive experience in the fields of video compression and multimedia coding and communications. I have also relied on my review and analysis of the prior art, information provided to me and information I have independently reviewed.

4. I am submitting the same declaration for both IPR2024-00604 and IPR2024-00605, as these petitions raise the same grounds for Claims 1-8, 15-22, and 29 (-00604) and Claims 9-14, 23-28, and 30 (-00605) in the same challenged patent, namely the ’714 Patent. My cites to the petition herein are to the page numbers in IPR2024-00604.

## II. EDUCATIONAL BACKGROUND AND QUALIFICATIONS

5. Details of my professional qualifications and background are summarised below and are set out in detail in my Curriculum Vitae, attached to this declaration.

6. I am Director and co-founder of Vcodex BV.

7. I have over 30 years of experience related to video and image compression and coding. I am qualified by education and experience to testify as an expert with respect to subject matter in the fields of video, image, multimedia and general-purpose data encoding, decoding, compression, decompression, and transmission.

8. I received a Master of Engineering (M.Eng.) degree in Electronic and Electrical Engineering from Heriot-Watt University in Edinburgh, Scotland in 1990. I received a Doctor of Philosophy (Ph.D.) degree in Video Compression from Robert Gordon University in Aberdeen, Scotland in 1999. I worked as a Digital Signal Processing ("DSP") Hardware Designer with GEC Avionics Ltd. from 1990 to 1993.

9. In 1993, I assumed a post as a Lecturer, then Reader and eventually a Full Professor in the field of image and video compression in the School of Engineering at Robert Gordon University. In 2009, I was awarded the position of Honorary Professor with Robert Gordon University.

10. At Robert Gordon University, I founded and ran an image communication technology research laboratory. I carried out original research in the field of data, image, and video compression, initiated and managed research projects, and supervised research students.

11. I am the author of four books and over 70 journal and conference papers on video and image coding and communication, including two widely cited books on the H.264 / MPEG-4 industry standards for video compression. In my 2002 book, *Video Codec Design*, I discussed in detail the efficient implementation of image and video compression on software and hardware platforms.



**Nokia Exhibit 2001, p. 6**
**Amazon.com v. Nokia**
**IPR2024-00605**

12. In 1995, during my employment at Robert Gordon University, I co-founded and became Technical Director, equivalent of Chief Technology Officer, at 4i2i Communications Limited. I held this position until 2000. In my role at 4i2i, I was responsible for and engaged in the design of software and hardware modules for compression and communication systems. The designs included video processing algorithms in software and hardware for implementation on processing devices and the design of compression algorithms such as block-based transforms, run-length coding, and variable-length coding in software and hardware. A modified version of one of my video compression hardware designs was successfully used by NASA to stream video from the International Space Station.

13. In 2007, I founded Vcodex Limited and currently serve as the CEO, through which I provide technical and strategic advice to technology companies particularly relating to video, image, and data compression for streaming.

14. In 2009, I founded Onecodec Limited and served as CEO, leading the company's development of innovative video, image, and multimedia data compression and storage software and systems. Onecodec's technology and business activities were merged with Vcodex Limited in 2015.

15. I have previously prepared expert reports and testified in a number of cases concerning video and image compression, graphics compression, general-purpose data compression, and multimedia streaming.

16. I am a named inventor on 11 patents or patent applications, including U.S. and non-US patents and applications.

17. Because of my background, training, and experience, I am qualified as an expert in the technical areas relevant to the ’714 patent.

18. My company Vcodex BV is being compensated for my independent analysis as an expert with respect to this inter partes review (IPR) proceeding, but neither my compensation nor Vcodex BV’s compensation is contingent in any way on the content of my analysis or the outcome of this proceeding. I have no financial interest in Petitioner (Amazon.com, Inc., Amazon.com Services LLC) or Patent Owner (Nokia Technologies Oy) and I have no financial interest in the challenged patent.

## III. MATERIALS REVIEWED AND TIME OF INVENTION

19. The opinions contained in this Declaration are based on the documents that I have reviewed, including the Petition and all materials cited therein, my professional judgment, as well as my education, experience, and my knowledge regarding technologies related to the ’714 Patent. I have also reviewed and

considered Rusert, Karczewicz, Lin, Nakamura and WD4, which I understand have been designated Exhibits Ex-1004 – Ex-1010.

## IV. LEGAL STANDARDS

### A. Overview

20. I am not an attorney or a legal expert, and I do not opine on matters of law. All the legal standards, which are listed in this section and which I applied in reaching the conclusions expressed throughout this Declaration, were provided to me and explained to me by counsel. In preparing this Declaration, I have endeavored to faithfully apply these legal standards. I do not intend to offer opinions on the law. Below, I describe the legal standards that I applied in my analysis of the claims of the ’714 Patent.

21. I have been informed by counsel that an issued patent is presumed valid and that the challenger of a patent’s validity bears the burden of proving invalidity of the patent.

### B. Patent Claims

22. I have been informed by counsel that a patent’s claims describe the invention made by the inventors and describe what the patent owner owns and what the owner may prevent others from doing.

23. I have been informed by counsel that claims may describe products,

such as machines or chemical compounds, or processes for making or using a product. Claims are usually divided into parts or steps called limitations.

24. I have been informed by counsel that there are two types of claims: independent claims and dependent claims. An independent claim sets forth all the requirements that must be met in order to be covered by that claim. Thus, it is not necessary to look at any other claim to determine what an independent claim covers. A dependent claim does not itself recite all of the requirements of the claim, but refers to another claim for some of its requirements. In this way, a dependent claim depends on another claim. The law considers a dependent claim to incorporate all of the requirements of the claims to which it refers.

25. I have been informed by counsel that a dependent claim then adds its own additional requirements. To determine what a dependent claim covers, it is necessary to look at both the dependent claim and any other claims to which it refers.

26. I have been informed by counsel that in a case where a dependent claim incorporates the limitations of an independent claim upon which it depends, if a reference fails to disclose any of the limitations of the independent claim, the claims which depend on that independent claim cannot be made invalid by such a reference. As a result, any of the references at issue in this proceeding that fail to disclose all of the limitations of an independent claim necessarily also fail to disclose

all of the limitations of claims which depend on that independent claim.

### C. Burden of Proof for Invalidity

27. I have been informed by counsel and I understand that the party challenging the validity of an issued U.S. patent in an IPR bears the burden of proving invalidity through facts supported by a preponderance of the evidence. I have been informed that a "preponderance of the evidence" means evidence sufficient to prove that a fact is more likely true than it is not.

### D. Claim Construction

28. I have been informed by counsel and I understand that the first step in determining validity is to properly construe the claims. I have further been informed by counsel that, in this proceeding, the Board must determine the scope of the claims by using the same claim construction standard that United States District Courts use. Under this standard, the words of a claim are given their "ordinary" and "customary" meaning as would have been understood by a person of ordinary skill in the art at the time of the invention. I have been informed that such a person looks to the claims, specification, and file history in understanding the meaning of the claim terms. I have applied this understanding in this declaration.

### E. Person of Ordinary Skill in the Art

29. I have been informed by counsel and I understand that a person having

ordinary skill in the art may be defined by factors such as, when considered at the time of the alleged invention: (a) the levels of education and experience of the inventor and other persons actively involved in the field; (b) the types of problems encountered in the field; (c) prior art solutions to those problems; (d) rapidity with which innovations are made; and (e) the sophistication of the technology.

### F. Anticipation

30. I have been informed by counsel and I understand that a patent claim can be found invalid as anticipated if each and every element of the claim, as properly construed, is found either explicitly or inherently in a single prior art reference. If the single prior art reference does not disclose explicitly or inherently any one claim limitation, then that claim is not anticipated. I have further been informed that the single prior art reference cannot merely disclose each element; rather, it must disclose all of the elements as arranged in the claim. I have been informed that for a prior art reference to "inherently" disclose something, the reference must necessarily function in accordance with, or include the claimed limitations, to anticipate. The missing descriptive matter cannot merely probably or possibly include the claimed limitations. I have further been informed by counsel that, with respect to an anticipation analysis, it is improper to combine separate, distinct embodiments of a single prior art reference.

31. I have been informed that for a reference to be anticipatory, the reference must contain an enabling disclosure. I have been informed that merely naming or describing the subject matter is insufficient if it cannot be produced without undue experimentation.

### G. Obviousness

32. I have been informed by counsel that a patent claim can be found invalid as obvious if the differences between the claim and the prior art references would have been obvious to a person of ordinary skill in the art at the time of the invention, taking into account (1) the scope and content of the prior art, (2) the differences between the prior art and the claims, (3) the level of ordinary skill in the art, and (4) any objective indicia of non-obviousness. I have further been informed by counsel that a claim can be found to be obvious in light of either a single prior art reference or multiple prior art references. I have been informed that references qualify as prior art for an obviousness determination only when they are analogous to the claimed invention. Two separate tests define the scope of analogous prior art: (1) whether the art is from the same field of endeavor, regardless of the problem addressed; and (2) if the reference is not within the field of the inventor's endeavor, whether the reference still is reasonably pertinent to the particular problem with which the inventor is involved.

33. I have been informed that to be obvious in light of a single prior art reference or multiple prior art references, there must be a reason either to modify the single prior art reference or to combine the two or more prior art references to achieve the claimed invention. I have been informed by counsel that this reason may come from a teaching, suggestion, or motivation to combine which may come from the reference or references themselves, the knowledge or "common sense" of one skilled in the art, or from the nature of the problem to be solved, and may be explicit or implicit from the prior art as a whole.

34. I have been informed by counsel that the combination of familiar elements according to known methods is likely to be obvious when it does no more than yield predictable results.

35. I have further been informed by counsel that there is no suggestion to combine, however, if a reference teaches away from its combination with another source. A reference may be said to teach away when a person of ordinary skill, upon reading the reference, would be discouraged from following the path set out in the reference, or would be led in a direction divergent from the path that was taken by the applicant, or if it suggests that the line of development flowing from the reference's disclosure is unlikely to be productive of the result sought by the applicant. If, when combined, the references would produce a seemingly inoperative

device, then they teach away from their combination. I have been informed that it is improper to combine references where the references teach away from their combination.

36. I have been informed by counsel that the degree of teaching away will depend on the particular facts; in general, a reference will teach away if it suggests that the line of development flowing from the reference's disclosure is unlikely to be productive of the result sought by the applicant. I have been informed that a reference teaches away, for example, if (1) the combination would produce a seemingly inoperative device, or (2) the references leave the impression that the product would not have the property sought by the applicant.

37. I have been informed by counsel that if the teachings of a prior art reference would lead one skilled in the art to make a modification that would render another prior art device inoperable, then such a modification would generally not be obvious. I have been informed that if a proposed modification would render the prior art device unsatisfactory for its intended purpose, then the proposed modification would generally not be obvious.

38. I have been informed by counsel that it is improper to use hindsight in making the obviousness determination.

39. I have been informed by counsel that some articulated reasoning with some rational underpinning to support the legal conclusion of obviousness must be made. I have been informed that, for example, there may be no rational underpinning to support the legal conclusion of obviousness where systems are already complete and the party challenging validity seeks to mix and match components, which each exist in the separate systems, from these complete systems.

## V. PERSON OF ORDINARY SKILL IN THE ART (POSITA)

40. Based on my review of the '714 Patent, the types of problems encountered in the art at and prior to the time of the alleged invention, prior solutions to those problems, the pace with which innovations were made during the relevant time period, the sophistication of the technology, and the educational level of active professionals in the field, I believe that a person of ordinary skill in the art, at the time of the invention, would have had at least a Bachelor's degree in electrical engineering, computer science, or computer engineering; familiarity with the relevant video coding standards as of this time; and at least two years of work experience in research, design, development, and/or testing of video coding hardware and/or software. More education could have substituted for less work experience and vice versa.

41. All of my opinions in this Declaration are from the perspective of a

person of ordinary skill in the art, as I have defined it above and during the relevant time frame (e.g., 2011). During that time frame, I possessed at least the qualifications of a POSITA, as defined above.

## VI. CLAIM CONSTRUCTION

42. I understand that claim terms are typically given their ordinary and customary meaning, as would have been understood by a person of ordinary skill in the art at the time of the alleged invention. In considering the meaning of the claims, I also understand that one must consider the claim language, specification, prosecution history, and the knowledge of a person of ordinary skill in the art at the relevant time.

## VII. BACKGROUND OF THE RELEVANT TECHNOLOGY

### A. Overview of Video Coding and Video Coding Standards

43. Modern-day video coding and compression schemes involve a delicate balance of competing concerns. On one hand, video technicians and consumers demand high fidelity and large resolution of the video images to make use of large high-definition displays and wider availability of high-speed Internet connections. However, the competing concern becomes the efficient use of storage space on hard drives and memory cards, as well as available bandwidth of Internet connections and computer processing demands. The use of modern video coding and compression

schemes aims to represent the video images in a compressed form with as little data as possible, while maintaining as much quality of the original source images as possible after decoding and ensuring that the video images can be decoded and displayed in real time. Present-day applications of video coding often involve a trade-off between computation, compression and video quality. Increasing the amount by which data is compressed can save storage space and transmission bandwidth, but may result in degraded video quality to the point where the visual quality of decoded video is unacceptably poor when viewed by the consumer. More compression for the same video quality, or better video quality for the same level of compression, may be achieved at the expense of increased computational processing and/or increased memory requirements. However, an increase in computational processing may require more sophisticated and perhaps more expensive processors and may lead to problems such as increased battery drain on mobile devices or reduced video frame rates.

Excerpt from Richardson 2010 book (Ex-2011[1]) at page 69:

---

[1] I refer here to Exhibit 2011 which contains excerpts from my 2010 book, "The H.264 Advanced Video Compression Standard."



**Nokia Exhibit 2001, p. 18**
**Amazon.com v. Nokia**
**IPR2024-00605**

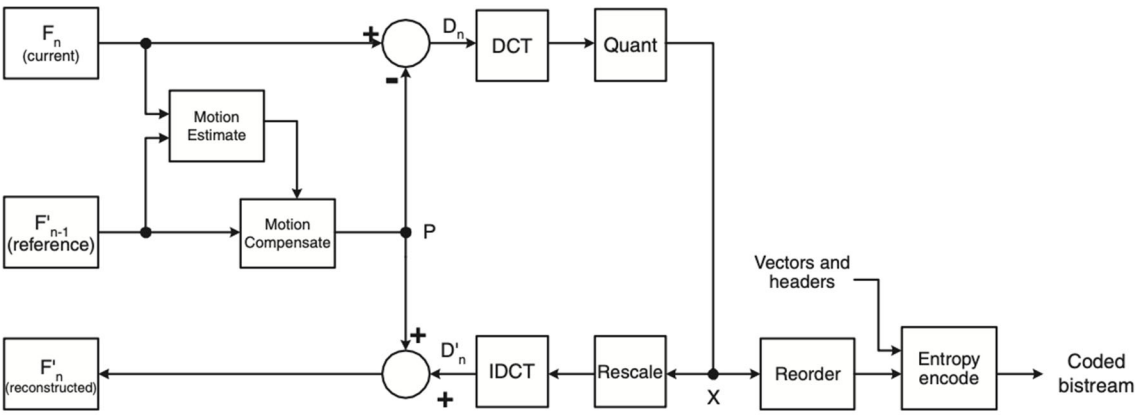


**Figure 3.51** DPCM/DCT video encoder

……

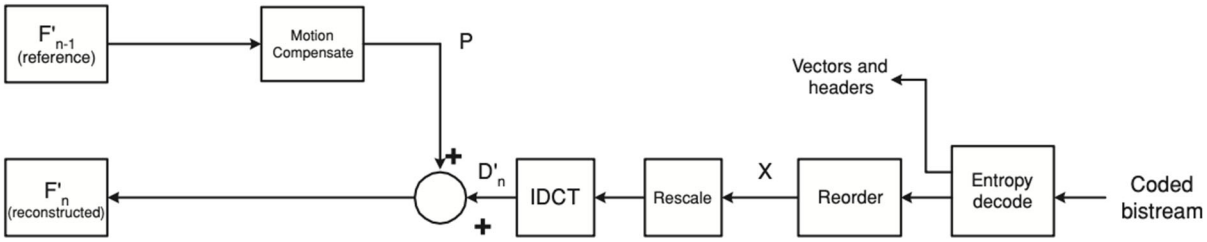


**Figure 3.52** DPCM/DCT video decoder

44. A video codec comprises a video encoder and a video decoder, which I illustrate in the above block diagrams from my 2010 book. A video encoder converts a sequence of input video frames (such as frame $F'_n$ in the above diagram, video encoder) into a coded bitstream, which is a compressed representation suitable for storage or transmission and a video decoder converts such a compressed representation into a series of decoded video frames (such as frames $F'_n$ in the above diagram, video decoder). (Ex-2011, 69; Ex-1001, 1:32-39). As the '714 patent



Nokia Exhibit 2001, p. 19
Amazon.com v. Nokia
IPR2024-00605

explains, a video encoder forms a prediction for each block of pixels to be coded, labelled P in the above diagrams, using motion compensated prediction from an area in a previously coded video frame or spatial prediction from previously coded pixels in the same frame. The prediction is subtracted from the block of pixels to be coded to produce a residual or error, labelled $D_n$ in the above encoder diagram. The residual or error is transformed, quantized and entropy encoded. (Ex-1001, 1:40-64). A video decoder entropy decodes the coded bitstream and rescales and inverse transforms block data in order to produce a decoded residual or error, labelled $D'_n$ in the above decoder diagram. The decoder also decodes information that enables it to form the same prediction as the encoder, labelled P above, which it adds to the decoded residual in order to construct a decoded block of pixels and thus a decoded frame $F'_n$.

45. By 2011, a POSITA would have been familiar with video coding standards such as the ITU-T H.263 and H.264 standards discussed in the '714 patent (Ex-1001, 1:40-43). In common with other video coding standards, these standards each specify a format for a compressed bitstream and a method of decoding such a bitstream to produce a decoded video sequence, but do not fully specify an encoding process. A video decoder conforming to a standard such as H.263 or H.264 decodes a bitstream that conforms to the specified bitstream format, in order to produce the

same output as the specified decoding process. A video encoder encodes a bitstream that conforms to the specified bitstream format and that can be successfully decoded by the specified decoding process. Even though a standard such as H.263 or H.264 does not fully specify an encoder, in practical encoders the steps carried out when encoding video largely mirror those carried out when decoding video. For example, both encoder and decoder must construct an identical prediction P for each block, whether using spatial prediction (intraframe prediction) or motion compensated prediction (interframe prediction). The decoder's inverse transform (labelled IDCT in the diagrams above) is the inverse of the encoder's forward transform. The decoder's rescaling process mirrors (as far as is possible) the encoder's quantization process and the decoder's entropy decoding process reverses the encoder's entropy encoding process. Thus, the specification of the decoder and the bitstream places certain constraints on the design of the encoder, in order for encoder and decoder to interoperate successfully.

### B. Overview of Motion Prediction in Video Coding

46. Most video coding techniques exploit pixel redundancy in the spatial and temporal domains, and involve finding ways to communicate new information in a bitstream by referencing similar, already communicated information. The references to already coded information are used to generate approximations (known



Nokia Exhibit 2001, p. 21
Amazon.com v. Nokia
IPR2024-00605

as predictions) of each block of a video frame being encoded. Predictions are combined with additional information (known as prediction error or residual information) in order to reproduce a reconstructed image upon decoding. The encoder communicates to the decoder how to make predictions for each block as well as the residual information in a compressed form, and the decoder creates the same prediction, decodes the residual information, and combines residual and prediction to reconstruct the coded block.

47. There are two main ways of exploiting redundancy in video coding in order to create such predictions—intra coding and inter coding. In an intra-coded block in a frame of video, reference to already coded pixels in the same frame are used to create a prediction and to reduce the number of bits necessary to encode and represent the current block. In an inter-coded block, a prediction block is constructed with reference to pixels in one or more previously coded frames, which may be frames in the past or the future in display order. The choice of one or more previously coded frames (known as reference pictures) and an offset (known as a motion vector, i.e., offsets indicating a prediction source in another frame) identifying each similar region of pixels in a reference picture, are used to create a prediction block. The instructions for creating the prediction block and the prediction error or residual are encoded.

48. A widely-used technique in video compression is the encoding of the source video through motion compensated prediction. (Ex-2011, 28-38). This process can be carried out by dividing the individual picture elements (pixels) of a video frame into blocks of pixels. Motion compensated prediction attempts to find a prediction or match for a block of pixels in a current video frame, in a correspondingly sized region in a previously coded frame. Such a match may be found in the same position as the current block or in an offset or shifted position in the previously coded frame. Such a shift in position may indicate, for example, that motion or other change is occurring in a particular area of the video scene. Motion compensated prediction has a very significant contribution to compression performance, since encoding the motion compensated differences between video frames typically results in much less data than encoding each video frame without such motion compensated prediction.

49. A strategy for reducing the amount of encoded data related to motion-compensated prediction is to reduce the amount of data needed to represent the motion vectors themselves. The motion vectors must be encoded and transmitted to the decoder to allow the decoder to form the same predictions the encoder made. Motion vector information can make up a substantial portion of a compressed video frame, particularly when small block sizes are used. However, the motion vectors of

adjacent blocks (in space and time) are generally correlated, and this correlation (redundancy) can be exploited through efficient encoding. Modern video coding standards such as H.264 and H.265 use predictive methods to encode the motion vectors.

50. The H.264 standard uses the median value of three already-encoded spatially adjacent motion vectors to form a prediction of the current motion vector. The difference between the current motion vector and its prediction is then losslessly encoded. The decoder forms the same prediction the encoder made, based on previously decoded data, and adds the motion vector difference to reconstruct the motion vector.

51. The H.265 standard uses more sophisticated ways to reduce the number of bits necessary to encode motion vectors. Two options for signaling each motion vector are the Merge mode and the Advanced Motion Vector Prediction (AMVP) mode. The Merge mode allows spatiotemporally adjacent blocks to share the same motion vectors and other motion information. The AMVP mode provides an efficient way to predict the motion vector for the current block to be encoded from spatiotemporally adjacent blocks.

52. In AMVP mode, a motion vector predictor is selected from a list of candidates, each of which is a motion vector of a previously coded block, and the

index of the selected candidate in the list is encoded and sent to the decoder. The list can include the same five spatial neighbors discussed below, as well as a temporal candidate.

53. In Merge mode, upon completion of the merging process, the resulting merged region, i.e. the selected candidate block and the current block, share the same motion vector. The following Figure from Ex-2012 conceptually illustrates five blocks a0, a1, b0, b1, and b2 that are spatially adjacent to the current block to be encoded. The availability of these blocks for merging is evaluated in the following order: a1, b1, b0, a0, b2. A temporal candidate for block merging at the same location in a reference frame, i.e. a previously coded frame that is not the current frame, is also evaluated for block merging. A candidate block is selected and the motion information for the current block is "inherited" from the candidate block, such that the motion information of the two blocks is merged.

Merge Mode Overview (Ex-2012, Figure 8):



Nokia Exhibit 2001, p. 25
Amazon.com v. Nokia
IPR2024-00605

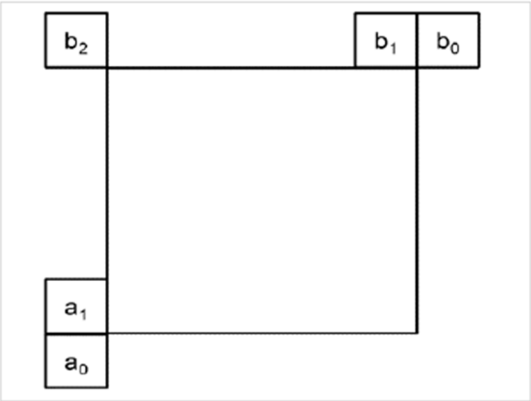


54. It is frequently the case that two or more candidates in the list have the same motion vector. It is beneficial to eliminate such duplicates to shorten the list and reduce the number of bits needed to specify the index in the list. Comparison of candidates for potential elimination is a computationally costly process which can be simplified using the invention described in the ’714 patent.

55. In Merge mode, the encoder and decoder form identical lists of motion vector prediction candidates, called merge lists, and then the encoder communicates to the decoder which candidate to use. Merge mode exploits the property that motion vectors of neighboring blocks are often similar. Merge mode can save bits by avoiding the need to send the motion vector explicitly and instead just sending an index value to identify a motion vector prediction included in the merge list, but this potentially reduces prediction accuracy if the motion vectors available on the list do not produce accurate predictions.

56. In video coding, motion may be approximated as being block-wise

constant, i.e. blocks of pixels in a frame are assumed to undergo translational motion represented by a motion vector with a horizontal and a vertical component. An example block size for prediction is 16x16 pixels, however modern video standards such as H.264 and its successor H.265 allow blocks of various size, with blocks potentially as small as 4x4 and as large as 64x64 (in the case of HEVC).

57. A motion vector for a current block to be encoded can be found, according to a similarity criterion, by finding the best matching block in a previously encoded reference frame. Motion-compensated prediction is accomplished by identifying data from the reference frame or frames that is a good match with data in the current frame. When a suitable matching region is found, its location is communicated by the encoder using the motion vector. The motion vector allows the decoder to obtain the same block used at the encoder from previously received encoded data. The encoder then uses the prediction corresponding to the motion vector to obtain a corresponding block of prediction error or "residual" values, which it compresses and encodes for transmission to a corresponding decoder. The decoder received and decodes the compressed prediction residual and combines it with the prediction corresponding to the motion vector to reconstruct an approximation of the original image data. The encoder and decoder carry out different steps in their respective parts of the process, but the encoder and decoder must form the same

prediction for the process to work.

### C. Technical Challenges in Motion Prediction

58. A computationally challenging part of motion-compensated prediction is identifying the motion vector to use for the prediction. This is typically done by sub-dividing the current frame into blocks, and finding matching regions in previously coded frames to use to predict the blocks in the current frame. While the blocks in the current frame are generally formed based on some type of grid pattern, the best matching blocks in previous frames may not, and typically do not, align with the same grid. As a result, the search for a best matching block typically involves a large number of comparisons between the current block and many corresponding blocks from prior frames, with differing motion vectors relative to the current block, to find the best available matching block. This search for a matching block is referred to as motion estimation.

59. The encoder may select a motion vector that points to an integer pixel value, so that the corresponding block is a block of pixels actually present in the prior frame. In typical video codecs, the encoder could also choose a motion vector that points to a sub-pixel location – a location between full pixel values, which generally results in a need for an even greater number of calculations, in order to generate pixel values at sub-pixel locations.

60. Once a suitable block prediction method is chosen and motion vectors are identified, the encoder encodes the instructions necessary to recreate the block prediction, including the motion vectors and whether they are to be used as part of a uni- or bi-prediction, including, in some cases, an indication of a chosen reference picture. Additionally, the encoder compresses and encodes the difference between the predicted values and the actual values (the prediction error / prediction residual), generally using a block transform, such as the Discrete Cosine Transform and quantization to limit the amount of residual data sent.

61. The decoder's task is to follow the encoder's instructions in the form of the motion vectors and the chosen prediction method (e.g., inter or intra-prediction) to recreate the prediction, and then to decode the compressed prediction error and to add it to the prediction to obtain the decoded video. The decoder must recreate the prediction signaled by the encoder exactly. Generally, encode processes uses as reference frames previously coded frames that the encoder has decoded, so that the decoder can reconstruct the same prediction for a current blocking using the prediction information communicated to the decoder.

## VIII. OVERLAP BETWEEN REFERENCES CITED IN PROSECUTION AND THE REFERENCES RELIED UPON IN THE PETITION

### A. The portions of the Rusert reference relied upon in the Petition has substantially the same generation of a potential motion vector candidate list teaching as found in Han, Tai, and Huang references cited in prosecution and on the face of the '714 Patent.

62. The first and second Grounds of the petition rely on Rusert (Ex-1004) for its disclosure of generating a potential motion vector ("PMV") candidate list, PMV_CANDS, for a current block of pixels that is being encoded or decoded. (Petition, 16, 19). [2] The PMV candidates are obtained from neighboring blocks around the current block are inserted into the PMV_CANDS list in an iterative process until PMV_CANDS has been filled, as illustrated in Rusert Figures 3f and 3n below.

---

[2] Note I am submitting the same declaration for both IPR202-00604 and IPR202-00605, as these petitions raise the same grounds for Claims 1-8, 15-22, and 29 (-00604) and Claims 9-14, 23-28, and 30 (-00605) in the same patent. My cites to the petition are to the page numbers in IPR2024-00604.



Nokia Exhibit 2001, p. 30
Amazon.com v. Nokia
IPR2024-00605

Ex-1004 Figure 3f (showing the distance of neighbors),
3n (showing the scan order)

63. The petition argues that Rusert teaches selecting PMV candidates for a current block from a set of previously coded motion vectors that were used in previous blocks, and after each iteration the set of previously-coded motion vectors increases. Petition at 29.

64. Rusert was considered by the Patent Office during the prosecution of the ’714 Patent’s continuation patent, U.S. Patent No. 11,570,467 (the ’467 Patent). (Ex-2004, 167-181). In my opinion, Rusert contains substantially the same disclosure as the other references the examiner reviewed multiple times in connection with the ’714 Patent and its priority applications.

65. Han (Ex-2006), cited by applicant during the prosecution of the ’714 Patent (Ex-1002, 99), each of its two priority applications and one subsequent application (Ex-1016, 133; Ex-2003, 119; Ex-2004, 99), includes the same hierarchy

of block unit representation relied upon by the Petition. Tai (Ex-2007), like Rusert, discloses a correlation between block positions and neighboring blocks to reduce the number of PMV predictors to be evaluated. Huang (Ex-2008) similarly discloses constructing a candidate list based on motion information.

66. For example, both Rusert and Han disclose a hierarchy of block unit representation, both Rusert and Tai disclose a correlation between the current block position and neighboring blocks to reduce the number of PMV predictors to be evaluated, and both Rusert and Huang disclose constructing a candidate list based on motion information.

67. The ’467 Patent (Ex-2005) includes claims with similar scope to those at issue here. A comparison of Challenged Claim 1 of the ’714 Patent is presented below next to Claim 1 from the ’467 Patent to show the similarities in claim scope:

| **’714 Patent** | **’467 Patent** |
|---|---|
| **A method comprising**:<br><br>selecting **a first spatial motion vector prediction candidate from a set of spatial motion vector prediction candidates for a block of pixels** as a potential spatial motion vector prediction candidate to be included in a motion vector prediction list for a prediction unit of the block of pixels, where the motion vector prediction list | **A method comprising**:<br><br>determining **a first spatial motion vector prediction candidate from a set of spatial motion vector prediction candidates for a block of pixels**;<br><br>**comparing motion information of the first spatial motion vector prediction candidate with motion information of spatial motion vector prediction** |

| ’714 Patent | ’467 Patent |
|---|---|
| comprises motion information of the spatial motion vector prediction candidates and is utilized to identify motion vector prediction candidates of which **one spatial motion vector prediction candidate from the motion vector prediction list** is signaled as the motion information for the prediction unit;<br><br>**determining a subset** of spatial motion vector prediction candidates **based on a location of the block associated with the first spatial motion vector prediction candidate**;<br><br>**comparing motion information of the first spatial motion vector prediction candidate with motion information of spatial motion vector prediction candidates in** the determined **subset of spatial motion vector prediction candidates** without making a comparison of each pair from the set of spatial motion vector prediction candidates;<br><br>**determining to include** or exclude **the first spatial motion vector prediction candidate in the motion vector prediction list based on comparing**; and<br><br>causing information identifying the one spatial motion vector prediction candidate from the motion vector | **candidates in** a **subset** of the set of **spatial motion vector prediction candidates**, wherein the subset is less than the set, and wherein the **subset is determined based on a location of the block associated with the first spatial motion vector prediction candidate**;<br><br>**determining to include the first spatial motion vector prediction candidate in a motion vector prediction list for the** block of pixels **based on the comparing**;<br><br>selecting **one motion vector prediction candidate from the motion vector prediction list** to represent a motion vector prediction candidate for the block of pixels; and<br><br>performing a motion compensated prediction based on the selected motion vector prediction candidate to construct the block of pixels. |

| ’714 Patent | ’467 Patent |
|---|---|
| prediction list to be transmitted to a decoder or to be stored. | |

(Ex-1002, Claim 1; Ex-2004, Claim 1)

**B. The portions of the Karczewicz reference relied upon in the Petition have substantially the same disclosure of prediction units taught in the Han reference cited in prosecution and on the face of the ’714 Patent.**

68. Petitioner’s Grounds 1 and 2 rely on Karczewicz (Ex-1005) for its disclosure of H.265 prediction units. The petition argues that a POSITA would have been motivated to apply Rusert’s teachings to Karczewicz’s prediction units and related concepts. (Petition, 16, 24). However, the same quad-tree pattern by which a coding unit can be divided into prediction units relied upon in Karczewicz was before the Patent Office during the prosecution of the ’714 Patent and its priority applications, for example, in the disclosure of Han.

69. Han teaches a video compression scheme based on a flexible hierarchy of unit representation which includes block concepts, such as coding units, prediction units, and transform units. (Ex-1015, 159). In particular, the partition information in quad-tree based adaptive loop filter is replaced with coding unit splitting information. (*Id.*).

70. However, Petitioner fails to identify this similarity between

Karczewicz and Han. In my opinion, the art cited by Petitioner is cumulative to that considered by and rejected by the Patent Office when allowing the claims of the ’714 Patent and its priority applications.

### C. The portions of the Lin reference relied upon in the Petition have substantially the same disclosure of prediction units taught in the Han reference cited in prosecution and on the face of the ’714 Patent.

71. Petitioner relies on Lin (Ex-1006), in Ground 2, for its disclosure of removal of redundant motion vector predictors for divided coding units, and argues that a POSITA would have been motivated to apply Lin’s teachings to the Rusert/Karczewicz combination because Lin provides a straightforward teaching for reducing redundant candidates when blocks are divided. (Petition, 16, 53). However, the same teaching concerning the removal or redundant candidates, relied upon in Lin, was before the Patent Office, in Han, during the prosecution of the ’714 Patent and its priority applications. (*See, e.g.*, Ex-1015, 163-164). Like Lin, Han teaches that the transform may be applied to multiple prediction unit partitions with different motion vectors to help reduce the number of redundant candidates. (*Id.*).

72. Accordingly, in my opinion the relied upon disclosure from Lin was included in at least the Han reference cited by the Patent Office during prosecution of the ’714 Patent.



**Nokia Exhibit 2001, p. 35**
**Amazon.com v. Nokia**
**IPR2024-00605**

### D. The portions of the Nakamura and WD4 references relied upon in the Petition have substantially the same disclosure of reducing the number of candidates in the spatial derivation process to reduce the number of comparisons in the removal process taught in the Han, Tai, and Huang references cited in prosecution and on the face of the ’267 Patent.

73. Petitioner’s Ground 3 relies on Nakamura for its disclosure of reducing the number of candidates in the spatial derivation process to reduce the number of comparisons in the removal process. (Petition, 63). As I explain below, Petitioner seeks to modify Nakamura by applying it to WD4. (*Id.*, 63-65). Petitioner argues this modification, of applying Nakamura’s teachings to the draft H.265 standard, is motivated by the fact “that [it] was its express purpose.” (*Id.*, 63).

74. Nakamura (Ex-1007) and WD4 (Ex-1010) were considered by the Patent Office during the prosecution of the ’714 Patent. (Ex-1002, 127-128).

75. In my opinion, it is not surprising that the examiner did not discuss Nakamura and WD4 in an Office Action after reviewing it, because Nakamura and WD4 contain substantially the same disclosure as other references the examiner had already reviewed multiple times in connection with the ’714 Patent and its priority applications. In the Notice of Allowance, the examiner allowed the ’714 Patent without substantive discussion of Nakamura, citing as reasons for allowance “limitations analogous to the claims of” the ’833 Patent for comparing motion



Nokia Exhibit 2001, p. 36
Amazon.com v. Nokia
IPR2024-00605

information "without making a comparison of each pair from the set of spatial motion vector prediction candidates[.]" (Ex-1002, 118).

76. Accordingly, in addition to having actually been before the Patent Office for the prosecution of the challenged claims, the relied-upon disclosure from Nakamura was in my opinion included in multiple references cited to the Patent Office during the prosecution of the '714 Patent and each of its priority applications. (*See, e.g.*, Ex-1015, 308). In my view, Nakamura in combination with WD4 is nothing more than the definition of a cumulative reference to Han, Tai, and Huang.

## IX. THE GROUNDS IN THE PETITION DO NOT ANTICIPATE OR RENDER OBVIOUS THE CHALLENGED CLAIMS

### A. Ground 1: Rusert Combined with Karczewicz

#### 1. Rusert and Karczewicz do not teach both the "motion vector prediction list" and the determined "subset," as required by the claims

77. The petition's first ground, based on Rusert and Karczewicz, relies on PVM_CANDS to teach both the motion vector prediction list and the determined subset. I disagree with this interpretation because it relies on the same evidence in Rusert to show both the "motion vector prediction list" limitation and the "subset" limitation recited in each asserted independent claim of the '714 Patent. (Petition 31, 37).



Nokia Exhibit 2001, p. 37
Amazon.com v. Nokia
IPR2024-00605

78. First, in order to show the limitation "motion vector prediction list," Petitioner relies on the "PMV_CANDS" list of Rusert, contending that "Rusert's PMV_CANDS is the claimed 'motion vector prediction list.'" (Petition at 31). However, Petitioner also relies on Rusert's "PMV_CANDS" in order to show the "subset" limitation. Petitioner further asserts that "the subset is stored as a list of PMV candidates called PMV_CANDS." (Petition, 37).

79. Second, Petitioner's interpretation of the asserted claims of the '714 Patent to allow the "motion vector prediction list" and the "subset of spatial motion vector prediction candidates" to be met by the same structure in Rusert, in my opinion, renders these distinct claim elements functionally meaningless. The claims of the '714 Patent are concerned with "generating a motion vector prediction list for an image block." (Ex-1001, 4:19-20). This "motion vector prediction list" is generated by selecting a candidate to potentially be added to the list and then "performing a limited number of motion information comparisons between candidate pairs to remove the redundant candidates rather than comparing every single candidate pair." (*Id.*, 4:23-26). The subset consists of the candidates to which a selected candidate will be compared, and thus must consist of a subset of the original candidate set, so that when the selected candidate is paired with each member of the subset for comparison, the result is less than "every single candidate

pair." (*Id.*; *id.*, 17:53-65). In my opinion, the subset cannot, therefore, be the distinct "motion vector prediction list" being constructed. Rather, the subset can be "any [other] subset of the candidates, as long as not all possible candidate pairs are compared." (*Id.*, 17:62-65). This means that after the comparisons are performed, only the candidates that are determined not to be duplicates are included in the list. As noted above, Petitioner has in my view conflated these terms to support their theory of invalidity based on Rusert.

80. Accordingly, the petition has failed to show a reasonable likelihood that the challenged claims are invalid on this ground.

### 2. Rusert and Karczewicz do not teach both the "block associated with the first spatial motion vector prediction candidate," as required by the claims

81. The petition's first ground also relies on the interpretation that "the block" in limitation 1[b] means the "current block," as the "block of pixels" introduced in limitation 1[a]. (Petition at 23). I disagree with this interpretation because it is inconsistent with the context of the '714 Patent and the understanding of a person of skill in the art. Rusert in combination with Karczewicz does not render at least elements 1[b], 15[b], and 29[b] (604 Petition) and 9[b] and 23[b] (605 Petition) obvious.

82. A POSITA would understand and, as the '714 Patent makes clear, the

candidate motion vectors for the current frame use either "one or more … motion vectors of one or more neighbour blocks … of the current block in the same frame and/or co-located blocks … of the current block in one or more other frames[,]" meaning these are motion vectors associated with other blocks, rather than the current block, to define a list of suitable motion vector candidates for the current block. (Ex-1001, 12:51-56).

83. Petitioner proposes that "the subset of PMV candidates is based on … the location of the current block." (Petition, 37-38). In the context of Rusert, this would mean that the "determining a subset" element is satisfied regardless of whether the "location of the block" is associated with a first spatial motion vector candidate or not. However, in my view this analysis reads outside of the claim language, because there is no "current block associated with the first spatial motion vector prediction candidate" in the '714 Patent.

84. Petitioner also proposes, regardless of the selection of a first spatial motion vector prediction candidate (first element), the subset of spatial motion vector prediction candidates (second element) will be determined in the exact same way, since the distance and position of each candidate depend only on allowed positions relative to the current block. (Petitioner, 38). As an alternative proposal for the second element, Petitioner suggests that the subset of candidates with which a

current candidate is compared, depends on the location of the block associated with the first candidate. Petition at 39. The petition provides an example, where the PMV candidate for block "3" is compared with a subset of PMV candidates for blocks "1" and "2." Petition at 39. I do not agree that this reads on the claim language of the '714 Patent. Unlike the '714 Patent, the subset (subset of PMV candidates for blocks "1" and "2") does not actually depend in any way on the location of the first candidate (PMV candidate for block "3"). In the context of Rusert, the list of candidates (1, 2, 3, 4, etc.) is always constructed according to the same rules and the same order. (Ex-1004). For example, when candidate 3 is reached, it will always be compared with 1 and 2, regardless of the location of the first candidate.

85. Accordingly, Rusert in combination with Karczewicz fails to teach at least elements 1[b], 15[b], and 29[b] (604 Petition) and 9[b] and 23[b] (605 Petition) and the petition has failed to show a reasonable likelihood that the challenged claims are unpatentable based on this Ground.

**3. Rusert and Karczewicz do not teach "determining a subset of spatial motion vector predication candidates based on a location of the block associated with the first spatial motion vector predication candidate," as required by the claims**

86. The petition's first Ground further relies on the interpretation that the subset of Rusert is the set of spatial motion vector candidates, because, as described

in the petition, the subset is neither determined by the selected first spatial motion candidate nor based on the location of the block associated with that candidate. (Petition at 37-39). I disagree with this interpretation because it is inconsistent with the specification of the ’714 Patent, the understanding of a person of skill in the art and the express teachings of Rusert.

87. The ’714 Patent discloses a set of spatial motion vector prediction candidates is obtained from neighboring blocks located around a current block of pixels being either encoded or decoded. (Ex-1001, 13:26-31). This relationship is illustrated in the following Figure. The Figure is annotated to show the neighboring blocks from which the set of spatial motion vector prediction candidates is obtained.

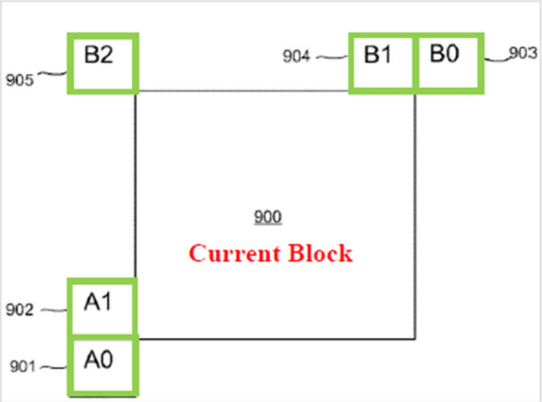


Ex-1001, Figure 9 (annotated to show the set of motion vector prediction candidates)

88. As a POSITA would understand, and as the ’714 Patent makes clear, when generating the claimed motion vector prediction list, a spatial motion vector

prediction candidate is selected for consideration and compared against a subset of the other spatial motion vector prediction candidates by checking whether each member of the subset has the same motion information as the selected candidate. (Ex-1001, 15:50-16:55). The purpose of this comparison is to avoid adding a spatial motion vector prediction candidate to the motion vector prediction list if it would be redundant. (*Id.*, 4:19-26).

89. The subset that I described above, is determined "based on the location of the block associated with the first spatial motion vector prediction candidate," so that for each candidate in question, there is a subset of the full candidate set, i.e., all the other four blocks other than the one being considered at a given time, which can be used for comparison in order to avoid redundancy, while also reducing the computational work required to perform comparisons. (*Id.*) Columns 15-16 of the '714 Patent provide an example comparing candidates in the subset. Referencing the Figure above, for the candidate located to the left (A1), the '714 Patent teaches that a subset containing B1 can be used for comparison. (*Id.*, 15:50-16:7). Similarly, for the candidate located on the top left (B2), the '714 Patent teaches that the subset containing A1 and B1 can be used for comparison. (*Id.*, 16:40-49). This shows that the location of a selected spatial motion vector prediction candidate is determinative of the members of the subset used for comparison, which in my opinion directly

contradicts Petitioner's construction of "the block" in element 1[b].

90. The petition approaches the construction of a motion vector prediction list differently from the claimed technique of the '714 Patent. In Rusert, the spatial motion vector candidates are obtained from neighboring blocks in a scanning order based on their distance from the current block, then determining if they should be added to the list, and then finally moving to the next PMV candidate in its scan order until the process is completed. (Ex-1004, ¶ 44). As I show above, Figure 3n of Rusert provides an exemplary depiction of this distance-based scanning method, with the closest PMV candidates being evaluated first, and the farthest last (*i.e.*, in the order 1, 2, 3 . . . 9, a, b . . .), in a counter-clockwise spiral starting from the top row. (*Id.*, ¶ 58).

91. When determining whether to add a PMV candidate to the list, Rusert compares the candidate to each previously-added PMV candidate. For example, if candidate 1 is added to the list, candidate 2 will be compared to candidate 1; if candidate 2 is also added, then candidate 3 will be compared to candidates 1 and 2. (*Id.*, ¶¶ 71-72). If the comparison determines that the candidate under consideration is too similar to one already added, then it can be excluded. (*Id.*)

92. In my opinion, Petitioner further improperly conflates the claimed "motion vector prediction list" with the claimed "subset of spatial motion vector

prediction candidates." (Petition, 31, 37). When attempting to establish that Rusert teaches the claimed "motion vector prediction list," the petition states that Rusert "teaches the claimed 'motion vector prediction list' through its disclosure of PMV_CANDS." (Petition, 31). First, Rusert defines PMV_CANDS as the "set of PMV candidates" from which a PMV to be used for encoding or decoding a block is signaled, that is, PMV_CANDS refers to the list of PMV candidates that have been encoded or, in the case of decoding, that is being built to determine the signaled PMV candidate. (Ex-1004, ¶ 4). Then, Petitioner goes on to use the same PMV_CANDS to show the determined subset, stating Rusert's "subset includes the previously-coded PMV candidates." Petition at 36. As a POSITA would understand, the determined subset of the independent claims is not the same list as the motion vector prediction list, as I described above. Accordingly, Petitioner cannot claim that PMV_CANDS satisfies the "subset" when Petitioner has already attempted to use it to satisfy the "motion vector prediction list."

93. In my opinion, even if Rusert's PMV_CANDS list could be correctly identified with the determined "subset" of the claims, Petitioner is incorrect in asserting that it is determined based on the location of a selected spatial motion vector prediction candidate for two reasons. First, the content of PMV_CANDS at the time that a PMV candidate is considered has already been determined without

regard for the PMV candidate under consideration. Second, the content of the PMV_CANDS list is based on the values of the previous candidates, not the location of the current candidate under consideration. (Petition, 39).

94. Considering the first point, Rusert's PMV_CANDS list is constructed by scanning neighboring blocks in an order determined by their distance to the current block. (Ex-1004, ¶ 61, Fig. 3n). In the following Figure, Rusert shows the content of the PMV_CANDS list, assuming that each neighboring block has a dissimilar motion vector, at each of the first four iterations of Rusert's methodology.

| Iter | Block being scanned | Content of PMV_CANDS |
|---|---|---|
| #0 | Block #1 | [ ] (empty list) |
| #1 | Block #2 | [1] |
| #2 | Block #3 | [1, 2] |
| #3 | Block #4 | [1, 2, 3] |

Ex-1004, Figure 3n

95. As shown above, at the time that neighboring block 2 has finished being considered, the content of PMV_CANDS for block 3 is already known. It will be the set of candidates 1 and 2, once again, assuming that 1 and 2 are dissimilar.

The location of and any information related to block 3 is irrelevant to the contents of PMV_CANDS at the time that block 3 is under consideration.

96. Considering the second point, rather than being based on the location of a PMV candidate under consideration, the set of PMV candidates used for comparison in Rusert is determined based on the value of each PMV candidate that has already been considered and added to the list. (Ex-1004). As I explain above, if candidate 3 is compared to candidates 1 and 2, this is not because candidate 3 is located in the top right, but because candidates 1 and 2 are dissimilar and thus neither is excluded from being added to PMV_CANDS. (*Id.*, at ¶¶ 70-72).

### B. Ground 3: Nakamura and WD4 - Nakamura and WD4 do not teach "determining to include or exclude … based on the comparing," as required by the claims

97. The petition seeks not only to combine Nakamura and WD4, but to modify them both in the process. The petition fails to show that a POSITA would be motivated to make this modified combination and fails to show that a POSITA would have had a reasonable expectation of success in making it.

98. First, the petition suggests that once Nakamura was proposed, it would have been obvious to a POSITA to combine it with WD4 or any working draft of the HEVC standard. (Petition, 63). I disagree, as demonstrated by WD4 itself. Petitioner agrees that Nakamura was originally proposed as an improvement to Working Draft

3 of the HEVC standard, but fails to address that Nakamura's proposed simplification to the derivation method for merge mode candidate was expressly evaluated by experts in the field and then not included in Working Draft 4. (*Id.*, 64).

99. In my opinion, rather than following the suggestion of Nakamura, which "tries to reduce the number of candidates in the spatial derivation process," WD4 reflects a decision not to reduce the number of candidates during the spatial derivation process, instead adopting a technique that more strongly resembles the same HM3.0 technique with which Nakamura contrasts its proposed technique. (Ex-1007, Abstract; *compare* Ex-1007, § 2.2.1 *with* Ex-1010, § 8.4.2.1.1).

100. Despite Petitioner's assertion to the contrary, the unification of the spatial neighbor locations used for merge mode and Motion Vector Prediction ("MVP") does not reflect an adoption of Nakamura's proposal that would motivate a POSITA to combine Nakamura with WD4. (Petition, 63-64). In JCTVC-F744-v3 ("F744"), where the JCTVC evaluated the Nakamura proposal, the JCT-VC adopted only an extremely limited aspect of Nakamura: the "candidate search order and TMVP refidx derivation." (Ex-2009, 8).

101. The principal technique of Nakamura, in which only "two spatial candidates and a temporal candidate are derived," was also not adopted, with WD4 making use of 5 spatial candidates where WD3 and Nakamura suggested using 4 and

2 spatial candidates respectively. (Ex-1010, Figure 8-5; Ex-1007, Table 2). Given that the JCT-VC considered Nakamura for integration into the Working Document and adopted only a narrow portion thereof, it is my opinion that a POSITA would not be compelled to reopen the JCTVC's consideration of Nakamura and adopt further aspects of the proposal that were previously rejected by the JCT-VC.

102. Second, with respect to the limitations of the challenged claims which describe "compar[ing] motion information of the first spatial motion vector prediction candidate with motion information of the spatial motion vector prediction candidate in the determined subset of spatial motion vector prediction candidates without making a comparison of each possible candidate pair from the set of spatial motion vector prediction candidates," it is my opinion that the postulated Nakamura / WD4 combination again fails. In the petition, the proposed method for merge mode as well as the prior HM3.0 method were contrasted, as shown in the Figure below.



Nokia Exhibit 2001, p. 49
Amazon.com v. Nokia
IPR2024-00605

Table 2 presents the comparison between HM3.0 and proposed technique for merge mode.

**Table 2 Comparison between HM3.0 and proposed technique for merge mode**

| | HM3.0 | Proposal 1 |
|---|---|---|
| The number of spatial candidates | 4 in 4 [positions] | 2 in 5 [positions] |
| Spatial derivation order | A, B, C, D | A, B, C, D, E |
| The number of times of comparison of redundant candidates in the spatial derivation process | 0 [time] | 0 [time] |
| The number of temporal candidates | 1 | 1 |
| Merging candidate list order | A, B, Col, C, D | $S_0$, $S_1$, Col |
| The number of times of comparison in the removal process | 10 [times] (A vs B, Col, C, D, B vs Col, C, D, Col vs C, D, and C vs D) | 3 [times] ($S_0$ vs $S_1$, $S_0$ vs Col, and $S_1$ vs Col) |

Notes:

$S_0$: The first spatial candidate found in the spatial derivation process

$S_1$: The second spatial candidate found in the spatial derivation process

Ex-1007 at § 2.2.1, Table 2

103. I agree that Petitioner correctly assesses that the HM3.0 technique performs "comparisons of all 10 pairs" in order to evaluate whether each of the A, B, Col, C, and D candidates should be included on the merge list. (Petition, 73-75). As shown in the Figure above, HM3.0 manifests exactly the behavior which the claims of the '714 Patent forbid, "making a comparison of each possible candidate pair from the set of spatial motion vector prediction candidates." (Ex-1001, Claims 15, 29).

104. However, in my opinion, with respect to Nakamura's Proposal 1, Petitioner is incorrect to suggest that less than each possible candidate pair is

compared. (Petition, 74). This erroneous conclusion appears to be based on Nakamura's lack of comparison between each of the A-E neighbors, which results from only "2 in 5" neighbors actually being used as "spatial candidates." (*Id.*.; Ex-1007, Table 2). In fact, of the 3 merging candidates (S0, S1, and Col), every permutation of these candidates is compared according to Nakamura's proposal: "S0 vs S1, S0 vs Col, and S1 vs Col." In other words, Nakamura does not reduce computation by comparing less than all of the possible candidate pairs, but instead proposes to reduce the number of possible candidate pairs to 3 and then subsequently comparing every possible candidate pair.

105. Petitioner's argument, in my opinion, also fails because Nakamura does not teach "determin[ing] to include or exclude the first spatial motion vector prediction candidate in the motion vector prediction list based on comparison of the motion information of the first spatial motion vector candidate with motion information of the spatial motion vector prediction candidate." (Petition, 74). Independent claims 1, 15 and 29 (-00604), 9 and 23 (-00605) teach selecting a spatial motion vector prediction candidate, performing a comparison to a subset, and then "determin[ing] whether to include this spatial motion prediction candidate in the merge list or not" based on that comparison. (Ex-1001, 15:55-56). On the contrary, Nakamura teaches including each of S0 and S1 on the merge list, and then, only

afterwards, removing each on the basis of a comparison of the two candidates.

106. As shown in the Figure below (Ex-1007), after spatial and temporal candidates are derived, each is included in the merging candidate list. Following this "list construction process" is the subsequent "removal process", in which candidates are compared to one another and candidates with the same motion information are removed. As I explain above, this differs from independent claims 1, 15 and 29 (-00604), and 9 and 23 (-00605), which instead first exclude the selected spatial motion vector prediction candidate from addition to the list if the non-comprehensive comparison of the claims indicates that the candidate under consideration would have redundant motion information with another candidate. Thus, the proposed Nakamura and WD4 combination fails to teach at least the independent claims 1, 15, and 29 (604 Petition), and 9 and 23 (605 Petition) of the '714 Patent.



Nokia Exhibit 2001, p. 52
Amazon.com v. Nokia
IPR2024-00605

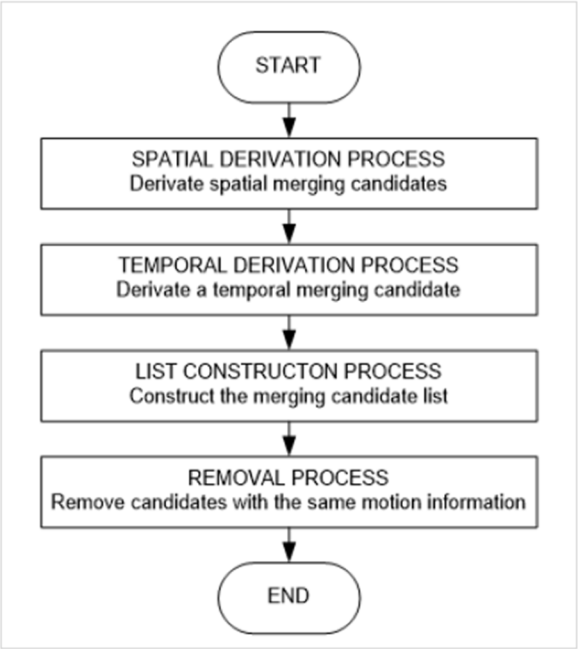


Ex-1007, Figure 1(a)

107. Petitioner's argument further fails because the Nakamura and WD4 combination does not teach element 1[b], "determining a subset of spatial motion vector prediction candidates." First, Petitioner suggests that S0 is a subset of the spatial motion vector prediction candidates, from the set S0 and S1. (Petition, 71). Second, Petitioner indicates that S1 is the first spatial motion vector prediction candidate, even though Nakamura discloses that S1 is derived after S0, as illustrated in the Figure below, showing the check order (arrow) generating S0 (first candidate) then S1 (second candidate). (Petition, 66, 68).

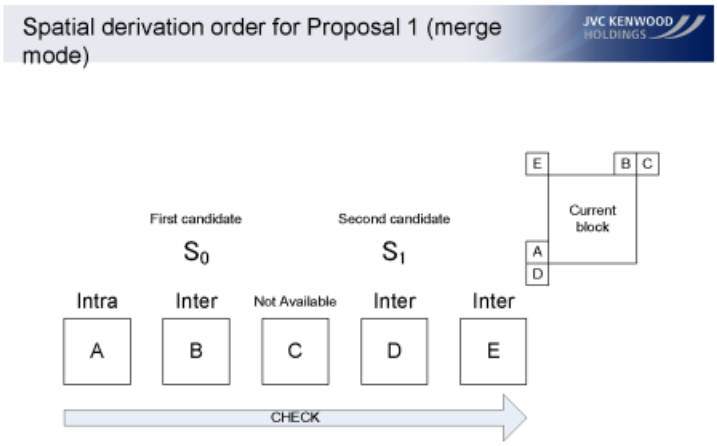


Ex-1009, 7

108. Instead, elements 1[a] and 1[b] in the '714 Patent have a causal order, since one cannot "determine a subset … based on a location … associated with the first spatial motion vector prediction candidate" until one has "selected a first spatial motion vector candidate." Conversely, in Nakamura, S0 cannot be and is not determined based on the location of the alleged first candidate (S1) since at the point when Nakamura determines S0, S1 is not yet derived, so the location of S1 is not known when S0 is determined. Ex-1007. Accordingly, Petitioner's alleged S0 subset cannot be determined based on anything associated with S1 at the point at which Nakamura derives S0, since S1 has not been derived and does not exist at this point.

109. The combination therefore fails to render obvious at least elements 1[b], 1[c], 1[d], 15[b], 15[c], 15[d], 29[b], 29[c], and 29[d] (-00604), and 9[b], 9[c], 9[d], 23[b], 23[c], and 23[d] (-00605), and the petition has failed to show a

reasonable likelihood that the challenged claims are invalid on this ground.

## X. CONCLUSION

110. This Declaration represents the opinions that I have formed to date based on the material currently available to me. I reserve the right to revise, supplement, and/or amend my opinions stated in this Declaration based on new information that becomes available to me and on my continuing analysis of the materials available to me.

111. I declare that all statements made herein of my knowledge are true, and that all statements made on information and belief are believed to be true, and that these statements were made with the knowledge that willful false statements and the like so made are punishable by fine, imprisonment, or both, under Section 1001 of Title 18 of the United States Code.

Dated: August 12, 2024

Iain E. Richardson

Dr. Iain Richardson



Nokia Exhibit 2001, p. 55
Amazon.com v. Nokia
IPR2024-00605