Doc Code: PA..
Document Description: Power of Attorney

PTO/AIA/82A (07-13)
Approved for use through 11/30/2014. OMB 0651-0051
U.S. Patent and Trademark Office; U.S. DEPARTMENT OF COMMERCE
Under the Paperwork Reduction Act of 1995, no persons are required to respond to a collection of information unless it displays a valid OMB control number.

TRANSMITTAL FOR POWER OF ATTORNEY TO ONE OR MORE REGISTERED PRACTITIONERS

NOTE: This form is to be submitted with the Power of Attorney by Applicant form (PTO/AIA/82B) to identify the application to which the Power of Attorney is directed, in accordance with 37 CFR 1.5, unless the application number and filing date are identified in the Power of Attorney by Applicant form. If neither form PTO/AIA/82A nor form PTO/AIA82B identifies the application to which the Power of Attorney is directed, the Power of Attorney will not be recognized in the application.

Application Number	Filed Herewith
Filing Date	January 13, 2020
First Named Inventor	Mehmet Oguz BICI
Title	METHOD FOR CODING AND AN APPARATUS
Art Unit	N/A
Examiner Name	N/A
Attorney Docket Number	042933/542643

SIGNATURE of Applicant or Patent Practitioner

Signature	/Guy R. Gosnell/	Date (Optional)	January 13, 2020
Name	Guy R. Gosnell	Registration Number	34,610
Title (if Applicant is a juristic entity)	Patent Practitioner		
Applicant Name (if Applicant is a juristic entity)	Nokia Technologies Oy		

NOTE: This form must be signed in accordance with 37 CFR 1.33. See 37 CFR 1.4(d) for signature requirements and certifications. If more than one applicant, use multiple forms.

☐ *Total of _____ forms are submitted.

This collection of information is required by 37 CFR 1.131, 1.32, and 1.33. The information is required to obtain or retain a benefit by the public which is to file (and by the USPTO to process) an application. Confidentiality is governed by 35 U.S.C. 122 and 37 CFR 1.11 and 1.14. This collection is estimated to take 3 minutes to complete, including gathering, preparing, and submitting the completed application form to the USPTO. Time will vary depending upon the individual case. Any comments on the amount of time you require to complete this form and/or suggestions for reducing this burden, should be sent to the Chief Information Officer, U.S. Patent and Trademark Office, U.S. Department of Commerce, P.O. Box 1450, Alexandria, VA 22313-1450. DO NOT SEND FEES OR COMPLETED FORMS TO THIS ADDRESS. **SEND TO: Commissioner for Patents, P.O. Box 1450, Alexandria, VA 22313-1450.**

If you need assistance in completing the form, call 1-800-PTO-9199 and select option 2.

Doc Code: PA..
Document Description: Power of Attorney

PTO/AIA/82B (07-13)
Approved for use through 03/31/2021. OMB 0651-0035
U.S. Patent and Trademark Office; U.S. DEPARTMENT OF COMMERCE
Under the Paperwork Reduction Act of 1995, no persons are required to respond to a collection of information unless it displays a valid OMB control number

POWER OF ATTORNEY BY APPLICANT

I hereby revoke all previous powers of attorney given in the application identified in either the attached transmittal letter or the boxes below.

Application Number	Filing Date

(Note: The boxes above may be left blank if information is provided on form PTO/AIA/82A.)

☑ I hereby appoint the Patent Practitioner(s) associated with the following Customer Number as my/our attorney(s) or agent(s), and to transact all business in the United States Patent and Trademark Office connected therewith for the application referenced in the attached transmittal letter (form PTO/AIA/82A) or identified above: 10949

OR

☐ I hereby appoint Practitioner(s) named in the attached list (form PTO/AIA/82C) as my/our attorney(s) or agent(s), and to transact all business in the United States Patent and Trademark Office connected therewith for the patent application referenced in the attached transmittal letter (form PTO/AIA/82A) or identified above. (Note: Complete form PTO/AIA/82C.)

Please recognize or change the correspondence address for the application identified in the attached transmittal letter or the boxes above to:

☑ The address associated with the above-mentioned Customer Number

OR

☐ The address associated with Customer Number:

OR

☐ Firm or Individual Name					
Address					
City		State		Zip	
Country					
Telephone		Email			

I am the Applicant (if the Applicant is a juristic entity, list the Applicant name in the box):

Nokia Technologies Oy, Karakaari 7, 02610 Espoo, Finland

☐ Inventor or Joint Inventor (title not required below)

☐ Legal Representative of a Deceased or Legally Incapacitated Inventor (title not required below)

☑ Assignee or Person to Whom the Inventor is Under an Obligation to Assign (provide signer's title if applicant is a juristic entity)

☐ Person Who Otherwise Shows Sufficient Proprietary Interest (e.g., a petition under 37 CFR 1.46(b)(2) was granted in the application or is concurrently being filed with this document) (provide signer's title if applicant is a juristic entity)

SIGNATURE of Applicant for Patent

The undersigned (whose title is supplied below) is authorized to act on behalf of the applicant (e.g., where the applicant is a juristic entity).

Signature		Date (Optional)	18.02.2019
Name	Emmanuelle Weizel Domenico Mendietti		
Title	Director, Patents Senior Patent Counsel		

NOTE: Signature - This form must be signed by the applicant in accordance with 37 CFR 1.33. See 37 CFR 1.4 for signature requirements and certifications. If more than one applicant, use multiple forms.

☐ Total of forms are submitted.

This collection of information is required by 37 CFR 1.131, 1.32, and 1.33. The information is required to obtain or retain a benefit by the public which is to file (and by the USPTO to process) an application. Confidentiality is governed by 35 U.S.C. 122 and 37 CFR 1.11 and 1.14. This collection is estimated to take 3 minutes to complete, including gathering, preparing, and submitting the completed application form to the USPTO. Time will vary depending upon the individual case. Any comments on the amount of time you require to complete this form and/or suggestions for reducing this burden, should be sent to the Chief Information Officer, U.S. Patent and Trademark Office, U.S. Department of Commerce, P.O. Box 1450, Alexandria, VA 22313-1450. DO NOT SEND FEES OR COMPLETED FORMS TO THIS ADDRESS. **SEND TO: Commissioner for Patents, P.O. Box 1450, Alexandria, VA 22313-1450.**

If you need assistance in completing the form, call 1-800-PTO-9199 and select option 2.

PTO/AIA/14 (02-18)
Approved for use through 11/30/2020. OMB 0651-0032
U.S. Patent and Trademark Office; U.S. DEPARTMENT OF COMMERCE
Under the Paperwork Reduction Act of 1995, no persons are required to respond to a collection of information unless it contains a valid OMB control number.

Application Data Sheet 37 CFR 1.76	Attorney Docket Number	042933/542643
	Application Number	
Title of Invention	METHOD FOR CODING AND AN APPARATUS	

The application data sheet is part of the provisional or nonprovisional application for which it is being submitted. The following form contains the bibliographic data arranged in a format specified by the United States Patent and Trademark Office as outlined in 37 CFR 1.76.
This document may be completed electronically and submitted to the Office in electronic format using the Electronic Filing System (EFS) or the document may be printed and included in a paper filed application.

Secrecy Order 37 CFR 5.2:

☐ Portions or all of the application associated with this Application Data Sheet may fall under a Secrecy Order pursuant to 37 CFR 5.2 (Paper filers only. Applications that fall under Secrecy Order may not be filed electronically.)

Inventor Information:

Inventor 1 Remove

Legal Name

Prefix	Given Name	Middle Name	Family Name	Suffix
	Mehmet	Oguz	BICI	

Residence Information (Select One) US Residency ● Non US Residency Active US Military Service

City	Tampere	Country of Residence i	FI

Mailing Address of Inventor:

Address 1	Tammelan puistokatu 1-3 D 46		
Address 2			
City	Tampere	State/Province	
Postal Code	33500	Country i	FI

Inventor 2 Remove

Legal Name

Prefix	Given Name	Middle Name	Family Name	Suffix
	Jani		LAINEMA	

Residence Information (Select One) US Residency ◉ Non US Residency Active US Military Service

City	Tampere	Country of Residence i	FI

Mailing Address of Inventor:

Address 1	Kisakentankatu 12 B 6		
Address 2			
City	Tampere	State/Province	
Postal Code	33230	Country i	FI

Inventor 3 Remove

Legal Name

Nokia Exhibit 2004, p. 3
Amazon.com v. Nokia
IPR2024-00605

Under the Paperwork Reduction Act of 1995, no persons are required to respond to a collection of information unless it contains a valid OMB control number.

Application Data Sheet 37 CFR 1.76	Attorney Docket Number	042933/542643
	Application Number	
Title of Invention	METHOD FOR CODING AND AN APPARATUS	

Prefix	Given Name	Middle Name	Family Name	Suffix
	Kemal		UGUR	

Residence Information (Select One) US Residency ◉ Non US Residency Active US Military Service

City	Tampere	Country of Residence i	FI

Mailing Address of Inventor:

Address 1	Lapintie 6D 25		
Address 2			
City	Tampere	**State/Province**	
Postal Code	33100	**Country** i	FI

All Inventors Must Be Listed - Additional Inventor Information blocks may be generated within this form by selecting the **Add** button. Add

Correspondence Information:

Enter either Customer Number or complete the Correspondence Information section below. For further information see 37 CFR 1.33(a).

☐ **An Address is being provided for the correspondence Information of this application.**

Customer Number	10949		
Email Address		Add Email	Remove Email

Application Information:

Title of the Invention	METHOD FOR CODING AND AN APPARATUS		
Attorney Docket Number	042933/542643	**Small Entity Status Claimed**	☐
Application Type	Nonprovisional		
Subject Matter	Utility		
Total Number of Drawing Sheets (if any)	13	**Suggested Figure for Publication (if any)**	

Filing By Reference:

Only complete this section when filing an application by reference under 35 U.S.C. 111(c) and 37 CFR 1.57(a). Do not complete this section if application papers including a specification and any drawings are being filed. Any domestic benefit or foreign priority information must be provided in the appropriate section(s) below (i.e., "Domestic Benefit/National Stage Information" and "Foreign Priority Information").

For the purposes of a filing date under 37 CFR 1.53(b), the description and any drawings of the present application are replaced by this reference to the previously filed application, subject to conditions and requirements of 37 CFR 1.57(a).

Application number of the previously filed application	Filing date (YYYY-MM-DD)	Intellectual Property Authority or Country i

Nokia Exhibit 2004, p. 4
Amazon.com v. Nokia
IPR2024-00605

Under the Paperwork Reduction Act of 1995, no persons are required to respond to a collection of information unless it contains a valid OMB control number.

Application Data Sheet 37 CFR 1.76	Attorney Docket Number	042933/542643
	Application Number	
Title of Invention	METHOD FOR CODING AND AN APPARATUS	

Publication Information:

☐ Request Early Publication (Fee required at time of Request 37 CFR 1.219)

☐ **Request Not to Publish.** I hereby request that the attached application not be published under 35 U.S.C. 122(b) and certify that the invention disclosed in the attached application **has not and will not** be the subject of an application filed in another country, or under a multilateral international agreement, that requires publication at eighteen months after filing.

Representative Information:

Representative information should be provided for all practitioners having a power of attorney in the application. Providing this information in the Application Data Sheet does not constitute a power of attorney in the application (see 37 CFR 1.32).
Either enter Customer Number or complete the Representative Name section below. If both sections are completed the customer Number will be used for the Representative Information during processing.

Please Select One:	● Customer Number	US Patent Practitioner	○ Limited Recognition (37 CFR 11.9)
Customer Number	10949		

Domestic Benefit/National Stage Information:

This section allows for the applicant to either claim benefit under 35 U.S.C. 119(e), 120, 121, 365(c), or 386(c) or indicate National Stage entry from a PCT application. Providing benefit claim information in the Application Data Sheet constitutes the specific reference required by 35 U.S.C. 119(e) or 120, and 37 CFR 1.78.
When referring to the current application, please leave the "Application Number" field blank.

Prior Application Status	Patented				Remove
Application Number	Continuity Type	Prior Application Number	Filing Date (YYYY-MM-DD)	Patent Number	Issue Date (YYYY-MM-DD)
	Continuation of	16/356733	2019-03-18	10536714	2020-01-14
Prior Application Status	Patented				Remove
Application Number	Continuity Type	Prior Application Number	Filing Date (YYYY-MM-DD)	Patent Number	Issue Date (YYYY-MM-DD)
16/356733	Continuation of	15/681725	2017-08-21	10237574	2019-03-19
Prior Application Status	Patented				Remove
Application Number	Continuity Type	Prior Application Number	Filing Date (YYYY-MM-DD)	Patent Number	Issue Date (YYYY-MM-DD)
15/681725	Continuation of	15/426822	2017-02-07	9743105	2017-08-22
Prior Application Status	Patented				Remove
Application Number	Continuity Type	Prior Application Number	Filing Date (YYYY-MM-DD)	Patent Number	Issue Date (YYYY-MM-DD)
15/426822	Continuation of	13/666680	2012-11-01	9571833	2017-02-14

Nokia Exhibit 2004, p. 5
Amazon.com v. Nokia
IPR2024-00605

Under the Paperwork Reduction Act of 1995, no persons are required to respond to a collection of information unless it contains a valid OMB control number.

Application Data Sheet 37 CFR 1.76	Attorney Docket Number	042933/542643
	Application Number	
Title of Invention	METHOD FOR CODING AND AN APPARATUS	

Prior Application Status			Remove
Application Number	Continuity Type	Prior Application Number	Filing or 371(c) Date (YYYY-MM-DD)
13/666680	Claims benefit of provisional	61/555703	2011-11-04
Additional Domestic Benefit/National Stage Data may be generated within this form by selecting the **Add** button.			Add

Foreign Priority Information:

This section allows for the applicant to claim priority to a foreign application. Providing this information in the application data sheet constitutes the claim for priority as required by 35 U.S.C. 119(b) and 37 CFR 1.55. When priority is claimed to a foreign application that is eligible for retrieval under the priority document exchange program (PDX)[i] the information will be used by the Office to automatically attempt retrieval pursuant to 37 CFR 1.55(i)(1) and (2). Under the PDX program, applicant bears the ultimate responsibility for ensuring that a copy of the foreign application is received by the Office from the participating foreign intellectual property office, or a certified copy of the foreign priority application is filed, within the time period specified in 37 CFR 1.55(g)(1).

			Remove
Application Number	Country[i]	Filing Date (YYYY-MM-DD)	Access Code[i] (if applicable)
Additional Foreign Priority Data may be generated within this form by selecting the **Add** button.			Add

Statement under 37 CFR 1.55 or 1.78 for AIA (First Inventor to File) Transition Applications

☐ This application (1) claims priority to or the benefit of an application filed before March 16, 2013 and (2) also contains, or contained at any time, a claim to a claimed invention that has an effective filing date on or after March 16, 2013.
NOTE: By providing this statement under 37 CFR 1.55 or 1.78, this application, with a filing date on or after March 16, 2013, will be examined under the first inventor to file provisions of the AIA.

Nokia Exhibit 2004, p. 6
Amazon.com v. Nokia
IPR2024-00605

Application Data Sheet 37 CFR 1.76	Attorney Docket Number	042933/542643
	Application Number	
Title of Invention	METHOD FOR CODING AND AN APPARATUS	

Authorization or Opt-Out of Authorization to Permit Access:

When this Application Data Sheet is properly signed and filed with the application, applicant has provided written authority to permit a participating foreign intellectual property (IP) office access to the instant application-as-filed (see paragraph A in subsection 1 below) and the European Patent Office (EPO) access to any search results from the instant application (see paragraph B in subsection 1 below).

Should applicant choose not to provide an authorization identified in subsection 1 below, applicant **must opt-out** of the authorization by checking the corresponding box A or B or both in subsection 2 below.

NOTE: This section of the Application Data Sheet is **ONLY** reviewed and processed with the **INITIAL** filing of an application. After the initial filing of an application, an Application Data Sheet cannot be used to provide or rescind authorization for access by a foreign IP office(s). Instead, Form PTO/SB/39 or PTO/SB/69 must be used as appropriate.

1. Authorization to Permit Access by a Foreign Intellectual Property Office(s)

A. Priority Document Exchange (PDX) - Unless box A in subsection 2 (opt-out of authorization) is checked, the undersigned hereby **grants the USPTO authority** to provide the European Patent Office (EPO), the Japan Patent Office (JPO), the Korean Intellectual Property Office (KIPO), the State Intellectual Property Office of the People's Republic of China (SIPO), the World Intellectual Property Organization (WIPO), and any other foreign intellectual property office participating with the USPTO in a bilateral or multilateral priority document exchange agreement in which a foreign application claiming priority to the instant patent application is filed, access to: (1) the instant patent application-as-filed and its related bibliographic data, (2) any foreign or domestic application to which priority or benefit is claimed by the instant application and its related bibliographic data, and (3) the date of filing of this Authorization. See 37 CFR 1.14(h)(1).

B. Search Results from U.S. Application to EPO - Unless box B in subsection 2 (opt-out of authorization) is checked, the undersigned hereby **grants the USPTO authority** to provide the EPO access to the bibliographic data and search results from the instant patent application when a European patent application claiming priority to the instant patent application is filed. See 37 CFR 1.14(h)(2).

The applicant is reminded that the EPO's Rule 141(1) EPC (European Patent Convention) requires applicants to submit a copy of search results from the instant application without delay in a European patent application that claims priority to the instant application.

2. Opt-Out of Authorizations to Permit Access by a Foreign Intellectual Property Office(s)

☐ A. Applicant **DOES NOT** authorize the USPTO to permit a participating foreign IP office access to the instant application-as-filed. If this box is checked, the USPTO will not be providing a participating foreign IP office with any documents and information identified in subsection 1A above.

☐ B. Applicant **DOES NOT** authorize the USPTO to transmit to the EPO any search results from the instant patent application. If this box is checked, the USPTO will not be providing the EPO with search results from the instant application.

NOTE: Once the application has published or is otherwise publicly available, the USPTO may provide access to the application in accordance with 37 CFR 1.14.

Nokia Exhibit 2004, p. 7
Amazon.com v. Nokia
IPR2024-00605

Under the Paperwork Reduction Act of 1995, no persons are required to respond to a collection of information unless it contains a valid OMB control number.

Application Data Sheet 37 CFR 1.76	Attorney Docket Number	042933/542643
	Application Number	
Title of Invention	METHOD FOR CODING AND AN APPARATUS	

Applicant Information:

Providing assignment information in this section does not substitute for compliance with any requirement of part 3 of Title 37 of CFR to have an assignment recorded by the Office.

Applicant 1 Remove

If the applicant is the inventor (or the remaining joint inventor or inventors under 37 CFR 1.45), this section should not be completed. The information to be provided in this section is the name and address of the legal representative who is the applicant under 37 CFR 1.43; or the name and address of the assignee, person to whom the inventor is under an obligation to assign the invention, or person who otherwise shows sufficient proprietary interest in the matter who is the applicant under 37 CFR 1.46. If the applicant is an applicant under 37 CFR 1.46 (assignee, person to whom the inventor is obligated to assign, or person who otherwise shows sufficient proprietary interest) together with one or more joint inventors, then the joint inventor or inventors who are also the applicant should be identified in this section.

Clear

● Assignee	Legal Representative under 35 U.S.C. 117	Joint Inventor
Person to whom the inventor is obligated to assign.	Person who shows sufficient proprietary interest	

If applicant is the legal representative, indicate the authority to file the patent application, the inventor is:

Name of the Deceased or Legally Incapacitated Inventor:

If the Applicant is an Organization check here. ☒

Organization Name	NOKIA TECHNOLOGIES OY		
Mailing Address Information For Applicant:			
Address 1	Karakaari 7		
Address 2			
City	Espoo	**State/Province**	
Country	FI	Postal Code	02610
Phone Number		Fax Number	
Email Address			

Additional Applicant Data may be generated within this form by selecting the Add button. Add

Assignee Information including Non-Applicant Assignee Information:

Providing assignment information in this section does not substitute for compliance with any requirement of part 3 of Title 37 of CFR to have an assignment recorded by the Office.

Nokia Exhibit 2004, p. 8
Amazon.com v. Nokia
IPR2024-00605

Under the Paperwork Reduction Act of 1995, no persons are required to respond to a collection of information unless it contains a valid OMB control number.

Application Data Sheet 37 CFR 1.76	Attorney Docket Number	042933/542643
	Application Number	
Title of Invention	METHOD FOR CODING AND AN APPARATUS	

Assignee 1

Complete this section if assignee information, including non-applicant assignee information, is desired to be included on the patent application publication. An assignee-applicant identified in the "Applicant Information" section will appear on the patent application publication as an applicant. For an assignee-applicant, complete this section only if identification as an assignee is also desired on the patent application publication.

Remove

If the Assignee or Non-Applicant Assignee is an Organization check here. ☒

Organization Name	NOKIA TECHNOLOGIES OY

Mailing Address Information For Assignee including Non-Applicant Assignee:

Address 1	Karakaari 7		
Address 2			
City	Espoo	**State/Province**	
Country i	FI	Postal Code	02610
Phone Number		Fax Number	
Email Address			

Additional Assignee or Non-Applicant Assignee Data may be generated within this form by selecting the Add button. Add

Signature:

Remove

NOTE: This Application Data Sheet must be signed in accordance with 37 CFR 1.33(b). **However, if this Application Data Sheet is submitted with the INITIAL filing of the application and either box A or B is not checked in subsection 2 of the "Authorization or Opt-Out of Authorization to Permit Access" section, then this form must also be signed in accordance with 37 CFR 1.14(c).**

This Application Data Sheet **must** be signed by a patent practitioner if one or more of the applicants is a **juristic entity** (e.g., corporation or association). If the applicant is two or more joint inventors, this form must be signed by a patent practitioner, **all** joint inventors who are the applicant, or one or more joint inventor-applicants who have been given power of attorney (e.g., see USPTO Form PTO/AIA/81) on behalf of **all** joint inventor-applicants.

See 37 CFR 1.4(d) for the manner of making signatures and certifications.

Signature	/Guy R. Gosnell/			Date (YYYY-MM-DD)	2020-01-13
First Name	Guy	Last Name	Gosnell	Registration Number	34,610

Additional Signature may be generated within this form by selecting the Add button. Add

Application Data Sheet 37 CFR 1.76	Attorney Docket Number	042933/542643
	Application Number	
Title of Invention	METHOD FOR CODING AND AN APPARATUS	

This collection of information is required by 37 CFR 1.76. The information is required to obtain or retain a benefit by the public which is to file (and by the USPTO to process) an application. Confidentiality is governed by 35 U.S.C. 122 and 37 CFR 1.14. This collection is estimated to take 23 minutes to complete, including gathering, preparing, and submitting the completed application data sheet form to the USPTO. Time will vary depending upon the individual case. Any comments on the amount of time you require to complete this form and/or suggestions for reducing this burden, should be sent to the Chief Information Officer, U.S. Patent and Trademark Office, U.S. Department of Commerce, P.O. Box 1450, Alexandria, VA 22313-1450. DO NOT SEND FEES OR COMPLETED FORMS TO THIS ADDRESS. **SEND TO: Commissioner for Patents, P.O. Box 1450, Alexandria, VA 22313-1450.**

Nokia Exhibit 2004, p. 10
Amazon.com v. Nokia
IPR2024-00605

Privacy Act Statement

The Privacy Act of 1974 (P.L. 93-579) requires that you be given certain information in connection with your submission of the attached form related to a patent application or patent. Accordingly, pursuant to the requirements of the Act, please be advised that: (1) the general authority for the collection of this information is 35 U.S.C. 2(b)(2); (2) furnishing of the information solicited is voluntary; and (3) the principal purpose for which the information is used by the U.S. Patent and Trademark Office is to process and/or examine your submission related to a patent application or patent. If you do not furnish the requested information, the U.S. Patent and Trademark Office may not be able to process and/or examine your submission, which may result in termination of proceedings or abandonment of the application or expiration of the patent.

The information provided by you in this form will be subject to the following routine uses:

1 The information on this form will be treated confidentially to the extent allowed under the Freedom of Information Act (5 U.S.C. 552) and the Privacy Act (5 U.S.C. 552a). Records from this system of records may be disclosed to the Department of Justice to determine whether the Freedom of Information Act requires disclosure of these records.

2. A record from this system of records may be disclosed, as a routine use, in the course of presenting evidence to a court, magistrate, or administrative tribunal, including disclosures to opposing counsel in the course of settlement negotiations.

3 A record in this system of records may be disclosed, as a routine use, to a Member of Congress submitting a request involving an individual, to whom the record pertains, when the individual has requested assistance from the Member with respect to the subject matter of the record.

4. A record in this system of records may be disclosed, as a routine use, to a contractor of the Agency having need for the information in order to perform a contract. Recipients of information shall be required to comply with the requirements of the Privacy Act of 1974, as amended, pursuant to 5 U.S.C. 552a(m).

5. A record related to an International Application filed under the Patent Cooperation Treaty in this system of records may be disclosed, as a routine use, to the International Bureau of the World Intellectual Property Organization, pursuant to the Patent CooperationTreaty.

6. A record in this system of records may be disclosed, as a routine use, to another federal agency for purposes of National Security review (35 U.S.C. 181) and for review pursuant to the Atomic Energy Act (42 U.S.C. 218(c)).

7. A record from this system of records may be disclosed, as a routine use, to the Administrator, General Services, or his/her designee, during an inspection of records conducted by GSA as part of that agency's responsibility to recommend improvements in records management practices and programs, under authority of 44 U.S.C. 2904 and 2906. Such disclosure shall be made in accordance with the GSA regulations governing inspection of records for this purpose, and any other relevant (i.e., GSA or Commerce) directive. Such disclosure shall not be used to make determinations about individuals.

8. A record from this system of records may be disclosed, as a routine use, to the public after either publication of the application pursuant to 35 U.S.C. 122(b) or issuance of a patent pursuant to 35 U.S.C. 151. Further, a record may be disclosed, subject to the limitations of 37 CFR 1.14, as a routine use, to the public if the record was filed in an application which became abandoned or in which the proceedings were terminated and which application is referenced by either a published application, an application open to public inspections or an issued patent.

9. A record from this system of records may be disclosed, as a routine use, to a Federal, State, or local law enforcement agency, if the USPTO becomes aware of a violation or potential violation of law or regulation.

Electronic Patent Application Fee Transmittal

Application Number:	
Filing Date:	
Title of Invention:	METHOD FOR CODING AND AN APPARATUS
First Named Inventor/Applicant Name:	Mehmet Oguz BICI
Filer:	Guy Randall Gosnell/Torrey Wyatt
Attorney Docket Number:	042933/542643

Filed as Large Entity

Filing Fees for Utility under 35 USC 111(a)

Description	Fee Code	Quantity	Amount	Sub-Total in USD($)
Basic Filing:				
UTILITY APPLICATION FILING	1011	1	300	300
UTILITY SEARCH FEE	1111	1	660	660
UTILITY EXAMINATION FEE	1311	1	760	760
Pages:				
Claims:				
CLAIMS IN EXCESS OF 20	1202	10	100	1000
INDEPENDENT CLAIMS IN EXCESS OF 3	1201	3	460	1380
Miscellaneous-Filing:				

Description	Fee Code	Quantity	Amount	Sub-Total in USD($)
Petition:				
Patent-Appeals-and-Interference:				
Post-Allowance-and-Post-Issuance:				
Extension-of-Time:				
Miscellaneous:				
			Total in USD ($)	**4100**

Electronic Acknowledgement Receipt

EFS ID:	38277620
Application Number:	16741156
International Application Number:	
Confirmation Number:	3751
Title of Invention:	METHOD FOR CODING AND AN APPARATUS
First Named Inventor/Applicant Name:	Mehmet Oguz BICI
Customer Number:	10949
Filer:	Guy Randall Gosnell/Torrey Wyatt
Filer Authorized By:	Guy Randall Gosnell
Attorney Docket Number:	042933/542643
Receipt Date:	13-JAN-2020
Filing Date:	
Time Stamp:	16:12:13
Application Type:	Utility under 35 USC 111(a)

Payment information:

Submitted with Payment	yes
Payment Type	DA
Payment was successfully received in RAM	$4100
RAM confirmation Number	E20201CG12342576
Deposit Account	
Authorized User	

The Director of the USPTO is hereby authorized to charge indicated fees and credit any overpayment as follows:

File Listing:

Document Number	Document Description	File Name	File Size(Bytes)/ Message Digest	Multi Part /.zip	Pages (if appl.)
1		542643_CONT_Speciification.pdf	343474 feae91a827c9c132ca4eff0b26dd8f446105a466	yes	59
	Multipart Description/PDF files in .zip description				
	Document Description		**Start**	**End**	
	Abstract		59	59	
	Claims		46	58	
	Specification		1	45	
Warnings:					
Information:					
2	Drawings-only black and white line drawings	542643_Drawings.pdf	257116 c8cee22ac733bd8842929b383bf36df7ee15d488	no	13
Warnings:					
Information:					
3	Oath or Declaration filed	542643_Declaration.pdf	327249 38abcdfd905b494db554b5a174118d0f5856c765	no	3
Warnings:					
Information:					
4	Power of Attorney	542643_POA.pdf	401625 7ab0642713f1142e3aff6fd02e028a26535dfe17	no	2
Warnings:					
Information:					
5	Application Data Sheet	542643_ADS.pdf	1861795 bcd12178231cde03b39d5c046710ab0152ef560f	no	9

Warnings:					
Information:					
6	Fee Worksheet (SB06)	fee-info.pdf	38163 12f93ba3ee58eb1d273d37d38199e2d9a8239156	no	2
Warnings:					
Information:					
		Total Files Size (in bytes):	3229422		

This Acknowledgement Receipt evidences receipt on the noted date by the USPTO of the indicated documents, characterized by the applicant, and including page counts, where applicable. It serves as evidence of receipt similar to a Post Card, as described in MPEP 503.

New Applications Under 35 U.S.C. 111
If a new application is being filed and the application includes the necessary components for a filing date (see 37 CFR 1.53(b)-(d) and MPEP 506), a Filing Receipt (37 CFR 1.54) will be issued in due course and the date shown on this Acknowledgement Receipt will establish the filing date of the application.
National Stage of an International Application under 35 U.S.C. 371
If a timely submission to enter the national stage of an international application is compliant with the conditions of 35 U.S.C. 371 and other applicable requirements a Form PCT/DO/EO/903 indicating acceptance of the application as a national stage submission under 35 U.S.C. 371 will be issued in addition to the Filing Receipt, in due course.
New International Application Filed with the USPTO as a Receiving Office
If a new international application is being filed and the international application includes the necessary components for an international filing date (see PCT Article 11 and MPEP 1810), a Notification of the International Application Number and of the International Filing Date (Form PCT/RO/105) will be issued in due course, subject to prescriptions concerning national security, and the date shown on this Acknowledgement Receipt will establish the international filing date of the application.

ABSTRACT

The invention relates to a method for encoding, a method for decoding, an apparatus, computer program products, an encoder and a decoder for video information. The motion vector for a block in a video image is predicted from a set of motion vector prediction candidates determined based on previously-coded motion vectors. A motion vector prediction candidate is included in the set based on the location of the block associated with the first spatial motion vector prediction candidate and in comparison with motion vector prediction candidates already in the set.

Nokia Exhibit 2004, p. 17
Amazon.com v. Nokia
IPR2024-00605

Claims:

1. A method comprising:

selecting a first spatial motion vector prediction candidate from a set of spatial motion vector prediction candidates for a block of pixels as a potential spatial motion vector prediction candidate to be included in a motion vector prediction list for a prediction unit of the block of pixels, where the motion vector prediction list comprises motion information of the spatial motion vector prediction candidates and is utilized to identify motion vector prediction candidates of which one spatial motion vector prediction candidate from the motion vector prediction list is signaled as the motion information for the prediction unit;

comparing motion information of the first spatial motion vector prediction candidate with motion information of spatial motion vector prediction candidates in a subset of spatial motion vector prediction candidates that are based on a location of the block associated with the first spatial motion vector prediction candidate;

determining to include or exclude the first spatial motion vector prediction candiate in the motion vector prediction list based on the comparing; and

causing information identifying the one spatial motion vector prediction candidate from the motion vector prediction list to be transmitted to a decoder or to be stored.

2. The method according to claim 1 further comprising selecting spatial motion vector prediction candidates from the set of spatial motion vector prediction candidates as the potential spatial motion vector prediction candidate in a predetermined order.

3. The method according to claim 1, further comprising comparing motion information of the potential spatial motion vector prediction candidate with motion information of at most one other spatial motion vector prediction candidate of the set of spatial motion vector prediction candidates.

4. The method according to claim 1 further comprising examining whether the block of pixels is divided into a first prediction unit and a second prediction unit; and if so, excluding

Nokia Exhibit 2004, p. 18
Amazon.com v. Nokia
IPR2024-00605

the potential spatial motion vector prediction candidate from the motion vector prediction list if the prediction unit is the second prediction unit.

5. The method according to claim 1, further comprising

determining a maximum number of spatial motion vector prediction candidates to be included in the motion vector prediction list; and

limiting the number of spatial motion vector prediction candidates in the motion vector prediction list smaller or equal to the maximum number.

6. The method according to claim 5 comprising:

examining, if the number of spatial motion vector prediction candidates in the motion vector prediction list <u>is</u> smaller than the maximum number;

if so, examining whether the prediction unit to which the potential spatial motion vector prediction candidate belongs is available for motion prediction;

if so, performing at least one of the following:

for a potential spatial motion vector prediction candidate on a left side of the prediction unit, excluding the potential spatial motion vector prediction candidate from the motion vector prediction list if any of the following conditions are fulfilled:

– the received block of pixels is vertically divided into a first prediction unit and a second prediction unit; or

– the received block of pixels is horizontally divided into a first prediction unit and a second prediction unit, and if the prediction unit is the second prediction unit, and the potential spatial motion vector prediction candidate has essentially similar motion information than a spatial motion vector prediction candidate above the prediction unit;

for a potential spatial motion vector prediction candidate above the prediction unit, excluding the potential spatial motion vector prediction candidate from the motion vector prediction list if any of the following conditions are fulfilled:

– the received block of pixels is horizontally divided into a first prediction unit and a second prediction unit, and the prediction unit is the second prediction unit; <u>or</u>

Nokia Exhibit 2004, p. 19
Amazon.com v. Nokia
IPR2024-00605

– the potential spatial motion vector prediction candidate has essentially similar motion information than the spatial motion vector prediction candidate on the left side of the prediction unit;

for a potential spatial motion vector prediction candidate, which is on a right side of the potential spatial motion vector prediction candidate above the prediction unit, excluding the potential spatial motion vector prediction candidate from the motion vector prediction list if the potential spatial motion vector prediction candidate has essentially similar motion information than the spatial motion vector prediction candidate above the prediction unit;

for a potential spatial motion vector prediction candidate, which is below the potential spatial motion vector prediction candidate on the left side of the prediction unit, excluding the potential spatial motion vector prediction candidate from the motion vector prediction list if the potential spatial motion vector prediction candidate has essentially similar motion information than the spatial motion vector prediction candidate on the left side of the prediction unit;

for a potential spatial motion vector prediction candidate cornerwise neighbouring the prediction unit, excluding the potential spatial motion vector prediction candidate from the motion vector prediction list if any of the following conditions are fulfilled:

– all the other potential spatial motion vector prediction candidates have been included in the motion vector prediction list;

– the potential spatial motion vector prediction candidate has essentially similar motion information than the spatial motion vector prediction candidate above the prediction unit; or

– the potential spatial motion vector prediction candidate has essentially similar motion information than the spatial motion vector prediction candidate on the left side of the prediction unit.

7. The method according to claim 1 further comprising including a temporal motion prediction candidate into the motion vector prediction list.

8. The method according to claim 1 further comprising selecting one motion vector prediction candidate from the motion vector prediction list to represent a motion vector prediction for the block of pixels.

Nokia Exhibit 2004, p. 20
Amazon.com v. Nokia
IPR2024-00605

9. A method comprising:

selecting a first spatial motion vector prediction candidate from a set of spatial motion vector prediction candidates for an encoded block of pixels as a potential spatial motion vector prediction candidate to be included in a motion vector prediction list for a prediction unit of the encoded block of pixels, where the motion vector prediction list comprises motion information of the spatial motion vector prediction candidates;

comparing motion information of the first spatial motion vector prediction candidate with motion information of another spatial motion vector prediction candidate of ~~the set~~ a subset of spatial motion vector prediction candidates that are based on a location of the block associated with the first spatial motion vector prediction candidate;

determining to include or exclude the first spatial motion vector prediction candiate in the motion vector prediction list based on the comparing; and

selecting a spatial motion vector prediction candidate from the motion vector prediction list for use in decoding the encoded block of pixels, wherein the spatial motion vector prediction candidate is selected from the motion vector prediction list using information that was received identifying a respective spatial motion vector prediction candidate from the motion vector prediction list constructed by an encoder.

10. The method according to claim 9 further comprising comparing motion information of the potential spatial motion vector prediction candidate with motion information of at most one other spatial motion vector prediction candidate of the set of spatial motion vector prediction candidates.

11. The method according to claim 9 further comprising examining whether the received encoded block of pixels is divided into a first prediction unit and a second prediction unit; and if so, excluding the potential spatial motion vector prediction candidate from the motion vector prediction list if the prediction unit is the second prediction unit.

12. The method according to claim 9 further comprising

Nokia Exhibit 2004, p. 21
Amazon.com v. Nokia
IPR2024-00605

determining a maximum number of spatial motion vector prediction candidates to be included in the motion vector prediction list; and

limiting the number of spatial motion vector prediction candidates in the motion vector prediction list smaller or equal to the maximum number.

13. The method according to claim 12 further comprising:

examining, if the number of spatial motion vector prediction candidates in the motion vector prediction list is smaller than the maximum number;

if so, examining whether the prediction unit to which the potential spatial motion vector prediction candidate belongs is available for motion prediction;

if so, performing at least one of the following:

for a potential spatial motion vector prediction candidate on a left side of the prediction unit, excluding the potential spatial motion vector prediction candidate from the motion vector prediction list if any of the following conditions are fulfilled:

- the received encoded block of pixels is vertically divided into a first prediction unit and a second prediction unit; or
- the received encoded block of pixels is horizontally divided into a first prediction unit and a second prediction unit, and if the prediction unit is the second prediction unit, and the potential spatial motion vector prediction candidate has essentially similar motion information than a spatial motion vector prediction candidate above the prediction unit;

for a potential spatial motion vector prediction candidate above the prediction unit, excluding the potential spatial motion vector prediction candidate from the motion vector prediction list if any of the following conditions are fulfilled:

- the received encoded block of pixels is horizontally divided into a first prediction unit and a second prediction unit, and the prediction unit is the second prediction unit; or
- the potential spatial motion vector prediction candidate has essentially similar motion information than the spatial motion vector prediction candidate on the left side of the prediction unit;

Nokia Exhibit 2004, p. 22
Amazon.com v. Nokia
IPR2024-00605

for a potential spatial motion vector prediction candidate, which is on a right side of the potential spatial motion vector prediction candidate above the prediction unit, excluding the potential spatial motion vector prediction candidate from the motion vector prediction list if the potential spatial motion vector prediction candidate has essentially similar motion information than the spatial motion vector prediction candidate above the prediction unit;

for a potential spatial motion vector prediction candidate, which is below the potential spatial motion vector prediction candidate on the left side of the prediction unit, excluding the potential spatial motion vector prediction candidate from the motion vector prediction list if the potential spatial motion vector prediction candidate has essentially similar motion information than the spatial motion vector prediction candidate on the left side of the prediction unit; and

for a potential spatial motion vector prediction candidate cornerwise neighbouring the prediction unit, excluding the potential spatial motion vector prediction candidate from the motion vector prediction list if any of the following conditions are fulfilled:

- all the other potential spatial motion vector prediction candidates have been included in the motion vector prediction list;
- the potential spatial motion vector prediction candidate has essentially similar motion information than the spatial motion vector prediction candidate above the prediction unit; <u>or</u>
- the potential spatial motion vector prediction candidate has essentially similar motion information than the spatial motion vector prediction candidate on the left side of the prediction unit.

14. The method according to claim 9 further comprising selecting one motion vector prediction candidate from the motion vector prediction list to represent a motion vector prediction for the encoded block of pixels.

15. An apparatus comprising a processor and a memory including computer program code, the memory and the computer program code configured to, with the processor, cause the apparatus to:

select a first spatial motion vector prediction candidate from a set of spatial motion vector prediction candidates for a block of pixels as a potential spatial motion vector prediction

Nokia Exhibit 2004, p. 23
Amazon.com v. Nokia
IPR2024-00605

candidate to be included in a motion vector prediction list for a prediction unit of the block of pixels, where the motion vector prediction list comprises motion information of the spatial motion vector prediction candidates and is utilized to identify motion vector prediction candidates of which one spatial motion vector prediction candidate from the motion vector prediction list is signaled as the motion information for the prediction unit;

compare motion information of the first spatial motion vector prediction candidate with motion information of the spatial motion vector prediction candidate in a subset of spatial motion vector prediction candidates that are based on a location of the block associated with the first spatial motion vector prediction candidate;

determine to include or exclude the first spatial motion vector prediction candiate in the motion vector prediction list based on comparison of the motion information of the first spatial motion vector candidate with motion information of the spatial motion vector prediction candidate; and

cause information identifying the one spatial motion vector prediction candidate from the motion vector prediction list to be transmitted to a decoder or to be stored.

16. The apparatus according to claim 15 wherein the apparatus is further caused to select spatial motion vector prediction candidates from the set of spatial motion vector prediction candidates as the potential spatial motion vector prediction candidate in a predetermined order.

17. The apparatus according to claim 15, wherein the apparatus is further caused to compare motion information of the potential spatial motion vector prediction candidate with motion information of at most one other spatial motion vector prediction candidate of the set of spatial motion vector prediction candidates.

18. The apparatus according to claim 15 wherein the apparatus is further caused to examine whether the block of pixels is divided into a first prediction unit and a second prediction unit; and if so, exclude the potential spatial motion vector prediction candidate from the motion vector prediction list if the prediction unit is the second prediction unit.

19. The apparatus according to claim 15, wherein the apparatus is further caused to:

Nokia Exhibit 2004, p. 24
Amazon.com v. Nokia
IPR2024-00605

determine a maximum number of spatial motion vector prediction candidates to be included in the motion vector prediction list; and

limit the number of spatial motion vector prediction candidates in the motion vector prediction list smaller or equal to the maximum number .

20. The apparatus according to claim 19 wherein the apparatus is further caused to:

examine, if the number of spatial motion vector prediction candidates in the motion vector prediction list is smaller than the maximum number;

if so, examine whether the prediction unit to which the potential spatial motion vector prediction candidate belongs is available for motion prediction;

if so, perform at least one of the following:

for a potential spatial motion vector prediction candidate on a left side of the prediction unit, exclude the potential spatial motion vector prediction candidate from the motion vector prediction list if any of the following conditions are fulfilled:

- the received block of pixels is vertically divided into a first prediction unit and a second prediction unit; or
- the received block of pixels is horizontally divided into a first prediction unit and a second prediction unit, and if the prediction unit is the second prediction unit, and the potential spatial motion vector prediction candidate has essentially similar motion information than a spatial motion vector prediction candidate above the prediction unit;

for a potential spatial motion vector prediction candidate above the prediction unit, exclude the potential spatial motion vector prediction candidate from the motion vector prediction list if any of the following conditions are fulfilled:

- the received block of pixels is horizontally divided into a first prediction unit and a second prediction unit, and the prediction unit is the second prediction unit; or
- the potential spatial motion vector prediction candidate has essentially similar motion information than the spatial motion vector prediction candidate on the left side of the prediction unit;

for a potential spatial motion vector prediction candidate, which is on a right side of the potential spatial motion vector prediction candidate above the prediction unit, exclude the potential spatial motion vector prediction candidate from the motion vector prediction list if the

Nokia Exhibit 2004, p. 25
Amazon.com v. Nokia
IPR2024-00605

potential spatial motion vector prediction candidate has essentially similar motion information than the spatial motion vector prediction candidate above the prediction unit;

for a potential spatial motion vector prediction candidate, which is below the potential spatial motion vector prediction candidate on the left side of the prediction unit, exclude the potential spatial motion vector prediction candidate from the motion vector prediction list if the potential spatial motion vector prediction candidate has essentially similar motion information than the spatial motion vector prediction candidate on the left side of the prediction unit;

for a potential spatial motion vector prediction candidate cornerwise neighbouring the prediction unit, exclude the potential spatial motion vector prediction candidate from the motion vector prediction list if any of the following conditions are fulfilled:

- all the other potential spatial motion vector prediction candidates have been included in the motion vector prediction list;
- the potential spatial motion vector prediction candidate has essentially similar motion information than the spatial motion vector prediction candidate above the prediction unit; <u>or</u>
- the potential spatial motion vector prediction candidate has essentially similar motion information than the spatial motion vector prediction candidate on the left side of the prediction unit.

21. The apparatus according to claim 15 wherein the apparatus is further caused to include a temporal motion prediction candidate into the motion vector prediction list.

22. The apparatus according to claim 15 wherein the apparatus is further caused to select one motion vector prediction candidate from the motion vector prediction list to represent a motion vector prediction for the block of pixels.

23. An apparatus comprising a processor and a memory including computer program code, the memory and the computer program code configured to, with the processor, cause the apparatus to:

select a first spatial motion vector prediction candidate from a set of spatial motion vector prediction candidates for an encoded block of pixels as a potential spatial motion vector

Nokia Exhibit 2004, p. 26
Amazon.com v. Nokia
IPR2024-00605

prediction candidate to be included in a motion vector prediction list for a prediction unit of the encoded block of pixels, where the motion vector prediction list comprises motion information of the spatial motion vector prediction candidates;

compare motion information of the first spatial motion vector prediction candidate with motion information of the spatial motion vector prediction candidate in a subset of spatial motion vector prediction candidates that are based on a location of the block associated with the first spatial motion vector prediction candidate;

determine to include or exclude the first spatial motion vector prediction candiate in the motion vector prediction list based on comparison of the motion information of the first spatial motion vector candidate with motion information of the spatial motion vector prediction candidate; and

select a spatial motion vector prediction candidate from the motion vector prediction list for use in decoding the encoded block of pixels, wherein the spatial motion vector prediction candidate is selected from the motion vector prediction list using information that was received identifying a respective spatial motion vector prediction candidate from the motion vector prediction list constructed by an encoder.

24. The apparatus according to claim 23 wherein the apparatus is further caused to compare motion information of the potential spatial motion vector prediction candidate with motion information of at most one other spatial motion vector prediction candidate of the set of spatial motion vector prediction candidates.

25. The apparatus according to claim 23 wherein the apparatus is further caused to examine whether the received encoded block of pixels is divided into a first prediction unit and a second prediction unit; and if so, exclude the potential spatial motion vector prediction candidate from the motion vector prediction list if the prediction unit is the second prediction unit.

26. The apparatus according to claim 23 wherein the apparatus is further caused to:

determine a maximum number of spatial motion vector prediction candidates to be included in the motion vector prediction list; and

Nokia Exhibit 2004, p. 27
Amazon.com v. Nokia
IPR2024-00605

limit the number of spatial motion vector prediction candidates in the motion vector prediction list smaller or equal to the maximum number.

27. The apparatus according to claim 26 wherein the apparatus is further caused to:

examine if the number of spatial motion vector prediction candidates in the motion vector prediction list is smaller than the maximum number;

if so, examine whether the prediction unit to which the potential spatial motion vector prediction candidate belongs is available for motion prediction;

if so, perform at least one of the following:

for a potential spatial motion vector prediction candidate on a left side of the prediction unit, exclude the potential spatial motion vector prediction candidate from the motion vector prediction list if any of the following conditions are fulfilled:

- the received encoded block of pixels is vertically divided into a first prediction unit and a second prediction unit; <u>or</u>
- the received encoded block of pixels is horizontally divided into a first prediction unit and a second prediction unit, and if the prediction unit is the second prediction unit, and the potential spatial motion vector prediction candidate has essentially similar motion information than a spatial motion vector prediction candidate above the prediction unit;

for a potential spatial motion vector prediction candidate above the prediction unit, exclude the potential spatial motion vector prediction candidate from the motion vector prediction list if any of the following conditions are fulfilled:

- the received encoded block of pixels is horizontally divided into a first prediction unit and a second prediction unit, and the prediction unit is the second prediction unit; or
- the potential spatial motion vector prediction candidate has essentially similar motion information than the spatial motion vector prediction candidate on the left side of the prediction unit;

for a potential spatial motion vector prediction candidate, which is on a right side of the potential spatial motion vector prediction candidate above the prediction unit, exclude the potential spatial motion vector prediction candidate from the motion vector prediction list if the

Nokia Exhibit 2004, p. 28
Amazon.com v. Nokia
IPR2024-00605

potential spatial motion vector prediction candidate has essentially similar motion information than the spatial motion vector prediction candidate above the prediction unit;

for a potential spatial motion vector prediction candidate, which is below the potential spatial motion vector prediction candidate on the left side of the prediction unit, exclude the potential spatial motion vector prediction candidate from the motion vector prediction list if the potential spatial motion vector prediction candidate has essentially similar motion information than the spatial motion vector prediction candidate on the left side of the prediction unit; and

for a potential spatial motion vector prediction candidate cornerwise neighbouring the prediction unit, exclude the potential spatial motion vector prediction candidate from the motion vector prediction list if any of the following conditions are fulfilled:

- all the other potential spatial motion vector prediction candidates have been included in the motion vector prediction list;
- the potential spatial motion vector prediction candidate has essentially similar motion information than the spatial motion vector prediction candidate above the prediction unit; <u>or</u>
- the potential spatial motion vector prediction candidate has essentially similar motion information than the spatial motion vector prediction candidate on the left side of the prediction unit.

28. The apparatus according to claim 23 wherein the apparatus is further caused to select one motion vector prediction candidate from the motion vector prediction list to represent a motion vector prediction for the received encoded block of pixels.

29. A non-transitory computer readable medium having stored thereon a computer executable program code for use by an encoder, said program codes comprising instructions for:

selecting a first spatial motion vector prediction candidate from a set of spatial motion vector prediction candidates for a block of pixels as a potential spatial motion vector prediction candidate to be included in a motion vector prediction list for a prediction unit of the block of pixels, where the motion vector prediction list comprises motion information of the spatial motion vector prediction candidates and is utilized to identify motion vector prediction

Nokia Exhibit 2004, p. 29
Amazon.com v. Nokia
IPR2024-00605

candidates of which one spatial motion vector prediction candidate from the motion vector prediction list is signaled as the motion information for the prediction unit;

comparing motion information of the first spatial motion vector prediction candidate with motion information of the spatial motion vector prediction candidate in a subset of spatial motion vector prediction candidates that are based on a location of the block associated with the first spatial motion vector prediction candidate;

determining to include or exclude the first spatial motion vector prediction candiate in the motion vector prediction list based on the comparing; and

causing information identifying the one spatial motion vector prediction candidate from the motion vector prediction list to be transmitted to a decoder or to be stored.

30. A non-transitory computer readable medium having stored thereon a computer executable program code for use by a decoder, said program codes comprising instructions for:

selecting a first spatial motion vector prediction candidate from a set of spatial motion vector prediction candidates for an encoded block of pixels as a potential spatial motion vector prediction candidate to be included in a motion vector prediction list for a prediction unit of the encoded block of pixels, where the motion vector prediction list comprises motion information of the spatial motion vector prediction candidates;

comparing motion information of the first spatial motion vector prediction candidate with motion information of the spatial motion vector prediction candidate in a subset of spatial motion vector prediction candidates that is based on a location of the block associated with the first spatial motion vector prediction candidate;

determining to include or exclude the first spatial motion vector prediction candiate in the motion vector prediction list based on the comparing; and

selecting a spatial motion vector prediction candidate from the motion vector prediction list for use in decoding the encoded block of pixels, wherein the spatial motion vector prediction candidate is selected from the motion vector prediction list using information that was received identifying a respective spatial motion vector prediction candidate from the motion vector prediction list constructed by an encoder.

Nokia Exhibit 2004, p. 30
Amazon.com v. Nokia
IPR2024-00605

METHOD FOR CODING AND AN APPARATUS

CROSS-REFERENCE TO RELATED APPLICATIONS

[0001] This application is a continuation of U.S. Application No. 16/356,733, filed on March 18, 2019, which is a continuation of U.S. Application No. 15/681,725, filed August 21, 2017, which is a continuation of U.S. Application No. 15/426,822, filed February 7, 2017, which is a continuation of U.S. Application No. 13/666,680, filed November 1, 2012, which claims priority to U.S. Provisional Application No. 61/555,703, filed November 4, 2011, the entire contents of which are incorporated herein by reference.

TECHNICAL FIELD

[0002] There is provided a method for encoding, a method for decoding, an apparatus, computer program products, an encoder and a decoder.

BACKGROUND INFORMATION

[0003] This section is intended to provide a background or context to the invention that is recited in the claims. The description herein may include concepts that could be pursued, but are not necessarily ones that have been previously conceived or pursued. Therefore, unless otherwise indicated herein, what is described in this section is not prior art to the description and claims in this application and is not admitted to be prior art by inclusion in this section

[0004] A video codec may comprise an encoder which transforms input video into a compressed representation suitable for storage and/or transmission and a decoder that can uncompress the compressed video representation back into a viewable form, or either one of them. The encoder may discard some information in the original video sequence in order to represent the video in a more compact form, for example at a lower bit rate.

[0005] Many hybrid video codecs, operating for example according to the International Telecommunication Union's ITU-T H.263 and H.264 coding standards, encode video information in two phases. In the first phase, pixel values in a certain picture area or "block" are predicted. These pixel values can be predicted, for example, by motion compensation mechanisms, which involve finding and indicating an area in one of the previously encoded video frames (or a later coded video frame) that corresponds closely to the block being coded.

Nokia Exhibit 2004, p. 31
Amazon.com v. Nokia
IPR2024-00605

Additionally, pixel values can be predicted by spatial mechanisms which involve finding and indicating a spatial region relationship, for example by using pixel values around the block to be coded in a specified manner.

[0006] Prediction approaches using image information from a previous (or a later) image can also be called as Inter prediction methods, and prediction approaches using image information within the same image can also be called as Intra prediction methods.

[0007] The second phase is one of coding the error between the predicted block of pixels and the original block of pixels. This may be accomplished by transforming the difference in pixel values using a specified transform. This transform may be e.g. a Discrete Cosine Transform (DCT) or a variant thereof. After transforming the difference, the transformed difference may be quantized and entropy encoded.

[0008] By varying the fidelity of the quantization process, the encoder can control the balance between the accuracy of the pixel representation, (in other words, the quality of the picture) and the size of the resulting encoded video representation (in other words, the file size or transmission bit rate).

[0009] The decoder reconstructs the output video by applying a prediction mechanism similar to that used by the encoder in order to form a predicted representation of the pixel blocks (using the motion or spatial information created by the encoder and stored in the compressed representation of the image) and prediction error decoding (the inverse operation of the prediction error coding to recover the quantized prediction error signal in the spatial domain).

[0010] After applying pixel prediction and error decoding processes the decoder combines the prediction and the prediction error signals (the pixel values) to form the output video frame.

[0011] The decoder (and encoder) may also apply additional filtering processes in order to improve the quality of the output video before passing it for display and/or storing as a prediction reference for the forthcoming frames in the video sequence.

[0012] In some video codecs, such as High Efficiency Video Coding Working Draft 4, video pictures may be divided into coding units (CU) covering the area of a picture. A coding unit consists of one or more prediction units (PU) defining the prediction process for the samples within the coding unit and one or more transform units (TU) defining the prediction error coding process for the samples in the coding unit. A coding unit may consist of a square block of samples with a size selectable from a predefined set of possible coding unit sizes. A coding unit

Nokia Exhibit 2004, p. 32
Amazon.com v. Nokia
IPR2024-00605

with the maximum allowed size can be named as a largest coding unit (LCU) and the video picture may be divided into non-overlapping largest coding units. A largest coding unit can further be split into a combination of smaller coding units, e.g. by recursively splitting the largest coding unit and resultant coding units. Each resulting coding unit may have at least one prediction unit and at least one transform unit associated with it. Each prediction unit and transform unit can further be split into smaller prediction units and transform units in order to increase granularity of the prediction and prediction error coding processes, respectively. Each prediction unit may have prediction information associated with it defining what kind of a prediction is to be applied for the pixels within that prediction unit (e.g. motion vector information for inter predicted prediction units and intra prediction directionality information for intra predicted prediction units). Similarly, each transform unit may be associated with information describing the prediction error decoding process for samples within the transform unit (including e.g. discrete cosine transform (DCT) coefficient information). It may be signalled at coding unit level whether prediction error coding is applied or not for each coding unit. In the case there is no prediction error residual associated with the coding unit, it can be considered there are no transform units for the coding unit. The division of the image into coding units, and division of coding units into prediction units and transform units may be signalled in the bitstream allowing the decoder to reproduce the intended structure of these units.

[0013] In some video codecs, motion information is indicated by motion vectors associated with each motion compensated image block. These motion vectors represent the displacement of the image block in the picture to be coded (in the encoder) or decoded (at the decoder) and the prediction source block in one of the previously coded or decoded images (or pictures). In order to represent motion vectors efficiently, motion vectors may be coded differentially with respect to block specific predicted motion vector. In some video codecs, the predicted motion vectors are created in a predefined way, for example by calculating the median of the encoded or decoded motion vectors of the adjacent blocks.

[0014] Another way to create motion vector predictions is to generate a list or a set of candidate predictions from blocks in the current frame and/or co-located or other blocks in temporal reference pictures and signalling the chosen candidate as the motion vector prediction. A spatial motion vector prediction is a prediction obtained only on the basis of information of one or more blocks of the same frame than the current frame whereas temporal motion vector

Nokia Exhibit 2004, p. 33
Amazon.com v. Nokia
IPR2024-00605

prediction is a prediction obtained on the basis of information of one or more blocks of a frame different from the current frame. It may also be possible to obtain motion vector predictions by combining both spatial and temporal prediction information of one or more encoded blocks. These kinds of motion vector predictions are called as spatio-temporal motion vector predictions.

[0015] In addition to predicting the motion vector values, the reference index in the reference picture list can be predicted. The reference index may be predicted from blocks in the current frame and/or co-located or other blocks in a temporal reference picture. Moreover, some high efficiency video codecs employ an additional motion information coding/decoding mechanism, often called merging/merge mode, where all the motion field information, which includes motion vector and corresponding reference picture index for each available reference picture list, may be predicted and used without any modification or correction. Similarly, predicting the motion field information may be carried out using the motion field information of blocks in the current frame and/or co-located or other blocks in temporal reference pictures and the used motion field information is signalled among a list of motion field candidate list filled with motion field information of available blocks in the current frame and/or co-located or other blocks in temporal reference pictures.

[0016] In some video codecs the prediction residual after motion compensation is first transformed with a transform kernel (like DCT) and then coded. The reason for this is that often there still exists some correlation among the residual and transform can in many cases help reduce this correlation and provide more efficient coding.

[0017] Some video encoders utilize Lagrangian cost functions to find optimal coding modes, e.g. the desired Macroblock mode and associated motion vectors. This kind of cost function uses a weighting factor λ to tie together the (exact or estimated) image distortion due to lossy coding methods and the (exact or estimated) amount of information that is required to represent the pixel values in an image area:

$$C = D + \lambda R \quad (1)$$

where C is the Lagrangian cost to be minimized, D is the image distortion (e.g. Mean Squared Error) with the mode and motion vectors considered, and R the number of bits needed to represent the required data to reconstruct the image block in the decoder (including the amount of data to represent the candidate motion vectors).

Nokia Exhibit 2004, p. 34
Amazon.com v. Nokia
IPR2024-00605

[0018] Some video codecs such as hybrid video codecs may generate a list of motion vector predictions (MVP) consisting of motion vectors of spatial adjacent blocks (spatial MVP) and/or motion vectors of blocks in a previously decoded frame (temporal MVP). One of the candidate motion vectors in the list is signalled to be used as the motion vector prediction of the current block. After the list is generated, some of the motion vector prediction candidates may have the same motion information. In this case, the identical motion vector prediction candidates may be removed to reduce redundancy. During the decoding, if the temporal motion vector prediction information is unavailable due to e.g. loss of reference frame, the decoder may not know if the temporal motion vector prediction candidate in the list is to be removed. This may lead to uncertainty for mapping the decoded candidate index to the candidates whose removal decision is based on comparing motion information with the temporal motion vector prediction. As a result, false assignment of motion vector prediction candidates may occur which may lead to degradation in the picture quality and drift of false motion information throughout the decoding process.

SUMMARY

[0019] The present invention introduces a method for generating a motion vector prediction list for an image block. In some embodiments video codecs employ in a motion prediction candidate list construction a way to reduce the complexity of the implementation. This can be achieved by performing a limited number of motion information comparisons between candidate pairs to remove the redundant candidates rather than comparing every available candidate pair. The decision of whether comparing two candidates may depend on the order of the candidates to be considered for the list and/or coding/prediction mode and/or location of the blocks associated with the candidates. In some embodiments a video codec employs a merge process for motion information coding and creates a list of motion prediction candidates from which one of the candidates is to be signalled as the motion information for the current coding or prediction unit. The motion prediction candidates may consist of several spatial motion predictions and a temporal motion prediction. The spatial candidates are obtained from the motion information of e.g. spatial neighbour blocks.

[0020] According to a first aspect of the present invention there is provided a method comprising:

Nokia Exhibit 2004, p. 35
Amazon.com v. Nokia
IPR2024-00605

receiving a block of pixels including a prediction unit; determining a set of spatial motion vector prediction candidates for the block of pixels; the spatial motion vector prediction candidates being provided with motion information;

selecting a first spatial motion vector prediction candidate from the set of spatial motion vector prediction candidates as a potential spatial motion vector prediction candidate to be included in a merge list for the prediction unit;

determining a subset of spatial motion vector predictions based on the location of the block associated with the first spatial motion vector prediction candidate;

comparing motion information of the first spatial motion vector prediction candidate with motion information of the spatial motion vector prediction candidate in the determined subset of spatial motion vector prediction candidates;

if at least one of the comparisons indicates that the motion vector information of the spatial motion vector prediction candidates correspond with each other, excluding the first spatial motion vector prediction candidate from the merge list.

[0021] According to a second aspect of the present invention there is provided a method comprising:

receiving an encoded block of pixels including a prediction unit;

determining a set of spatial motion vector prediction candidates for the encoded block of pixels; the spatial motion vector prediction candidates being provided with motion information;

selecting a first spatial motion vector prediction candidate from the set of spatial motion vector prediction candidates as a potential spatial motion vector prediction candidate to be included in a merge list for the prediction unit;

determining a subset of spatial motion vector predictions based on the location of the block associated with the first spatial motion vector prediction candidate;

comparing motion information of the first spatial motion vector prediction candidate with motion information of another spatial motion vector prediction candidate of the set of spatial motion vector prediction candidates;

if at least one of the comparisons indicates that the motion vector information of the spatial motion vector prediction candidates correspond with each other, excluding the first spatial motion vector prediction candidate from the merge list.

Nokia Exhibit 2004, p. 36
Amazon.com v. Nokia
IPR2024-00605

[0022] According to a third aspect of the present invention there is provided an apparatus comprising a processor and a memory including computer program code, the memory and the computer program code configured to, with the processor, cause the apparatus to:

receive a block of pixels

including a prediction unit;

determining a set of spatial motion vector prediction candidates for the block of pixels; the spatial motion vector prediction candidates being provided with motion information;

selecting a first spatial motion vector prediction candidate from the set of spatial motion vector prediction candidates as a potential spatial motion vector prediction candidate to be included in a merge list for the prediction unit;

determining a subset of spatial motion vector predictions based on the location of the block associated with the first spatial motion vector prediction candidate;

comparing motion information of the first spatial motion vector prediction candidate with motion information of the spatial motion vector prediction candidate in the determined subset of spatial motion vector prediction candidates;

if at least one the comparisons indicates that the motion vector information of the spatial motion vector prediction candidates correspond with each other, excluding the first spatial motion vector prediction candidate from the merge list.

[0023] According to a fourth aspect of the present invention there is provided an apparatus comprising a processor and a memory including computer program code, the memory and the computer program code configured to, with the processor, cause the apparatus to:

receive an encoded block of pixels

including a prediction unit;

determining a set of spatial motion vector prediction candidates for the encoded block of pixels; the spatial motion vector prediction candidates being provided with motion information;

selecting a first spatial motion vector prediction candidate from the set of spatial motion vector prediction candidates as a potential spatial motion vector prediction candidate to be included in a merge list for the prediction unit;

determining a subset of spatial motion vector predictions based on the location of the block associated with the first spatial motion vector prediction candidate;

Nokia Exhibit 2004, p. 37
Amazon.com v. Nokia
IPR2024-00605

comparing motion information of the first spatial motion vector prediction candidate with motion information of another spatial motion vector prediction candidate of the set of spatial motion vector prediction candidates;

if at least one of the comparisons indicates that the motion vector information of the spatial motion vector prediction candidates correspond with each other, excluding the first spatial motion vector prediction candidate from the merge list.

[0024] According to a fifth aspect of the present invention there is provided a storage medium having stored thereon a computer executable program code for use by an encoder, said program code comprises instructions for:

receiving a block of pixels including a prediction unit;

determining a set of spatial motion vector prediction candidates for the block of pixels; the spatial motion vector prediction candidates being provided with motion information;

select a first spatial motion vector prediction candidate from the set of spatial motion vector prediction candidates as a potential spatial motion vector prediction candidate to be included in a merge list for the prediction unit;

determine a subset of spatial motion vector predictions based on the location of the block associated with the first spatial motion vector prediction candidate;

compare motion information of the first spatial motion vector prediction candidate with motion information of the spatial motion vector prediction candidate in the determined subset of spatial motion vector prediction candidates;

exclude the first spatial motion vector prediction candidate from the merge list, if at least one of the comparisons indicates that the motion vector information of the spatial motion vector prediction candidates correspond with each other

[0025] According to a sixth aspect of the present invention there is provided a storage medium having stored thereon a computer executable program code for use by a decoder, said program code comprises instructions for:

receiving an encoded block of pixels including a prediction unit;

determining a set of spatial motion vector prediction candidates for the encoded block of pixels; the spatial motion vector prediction candidates being provided with motion information;

Nokia Exhibit 2004, p. 38
Amazon.com v. Nokia
IPR2024-00605

selecting a first spatial motion vector prediction candidate from the set of spatial motion vector prediction candidates as a potential spatial motion vector prediction candidate to be included in a merge list for the prediction unit;

determining a subset of spatial motion vector predictions based on the location of the block associated with the first spatial motion vector prediction candidate;

comparing motion information of the first spatial motion vector prediction candidate with motion information of the spatial motion vector prediction candidate in the determined subset of spatial motion vector prediction candidates;

if at least one of the comparisons indicates that the motion vector information of the spatial motion vector prediction candidates correspond with each other, excluding the first spatial motion vector prediction candidate from the merge list.

[0026] According to a seventh aspect of the present invention there is provided an apparatus comprising:

means for receiving a block of pixels including a prediction unit;

means for determining a set of spatial motion vector prediction candidates for the block of pixels; the spatial motion vector prediction candidates being provided with motion information;

selecting a first spatial motion vector prediction candidate from the set of spatial motion vector prediction candidates as a potential spatial motion vector prediction candidate to be included in a merge list for the prediction unit;

determining a subset of spatial motion vector predictions based on the location of the block associated with the first spatial motion vector prediction candidate;

comparing motion information of the first spatial motion vector prediction candidate with motion information of the spatial motion vector prediction candidate in the determined subset of spatial motion vector prediction candidates;

if at least one of the comparisons indicates that the motion vector information of the spatial motion vector prediction candidates correspond with each other, excluding the first spatial motion vector prediction candidate from the merge list.

[0027] According to an eighth aspect of the present invention there is provided an apparatus comprising:

means for receiving an encoded block of pixels including a prediction unit;

Nokia Exhibit 2004, p. 39
Amazon.com v. Nokia
IPR2024-00605

means for determining a set of spatial motion vector prediction candidates for the encoded block of pixels; the spatial motion vector prediction candidates being provided with motion information;

means for selecting a first spatial motion vector prediction candidate from the set of spatial motion vector prediction candidates as a potential spatial motion vector prediction candidate to be included in a merge list for the prediction unit;

means for determining a subset of spatial motion vector predictions based on the location of the block associated with the first spatial motion vector prediction candidate;

means for comparing motion information of the first spatial motion vector prediction candidate with motion information of the spatial motion vector prediction candidate in the determined subset of spatial motion vector prediction candidates;

means for excluding the first spatial motion vector prediction candidate from the merge list, if at least one of the comparisons indicates that the motion vector information of the spatial motion vector prediction candidates correspond with each other.

DESCRIPTION OF THE DRAWINGS

[0028] For better understanding of the present invention, reference will now be made by way of example to the accompanying drawings in which:

[0029] Figure 1 shows schematically an electronic device employing some embodiments of the invention;

[0030] Figure 2 shows schematically a user equipment suitable for employing some embodiments of the invention;

[0031] Figure 3 further shows schematically electronic devices employing embodiments of the invention connected using wireless and wired network connections;

[0032] Figure 4a shows schematically an embodiment of the invention as incorporated within an encoder;

[0033] Figure 4b shows schematically an embodiment of a prediction reference list generation and modification according to some embodiments of the invention;

[0034] Figures 5a and 5b show a flow diagram showing the operation of an embodiment of the invention with respect to the encoder as shown in figure 4a;

Nokia Exhibit 2004, p. 40
Amazon.com v. Nokia
IPR2024-00605

[0035] Figure 6a illustrates an example of spatial and temporal prediction of a prediction unit;

[0036] Figure 6b illustrates another example of spatial and temporal prediction of a prediction unit;

[0037] Figure 7 shows schematically an embodiment of the invention as incorporated within a decoder;

[0038] Figures 8a and 8b show a flow diagram of showing the operation of an embodiment of the invention with respect to the decoder shown in figure 7;

[0039] Figure 9 illustrates an example of a coding unit and some neighbour blocks of the coding unit;

[0040] Figure 10a illustrates an example of a horizontal division of the coding unit;

[0041] Figure 10b illustrates an example of a vertical division of the coding unit;

[0042] Figure 11a illustrates locations of five spatial neighbours A0, A1, B0, B1, B2 for a prediction unit generated as the second prediction unit of a horizontally divided coding unit;

[0043] Figure 11b illustrates locations of five spatial neighbours for a prediction unit generated as the second prediction unit of a vertically divided coding unit; and

[0044] Figure 12 illustrates an example of blocks between some spatial neighbours of a coding unit.

DETAILED DESCRIPTION OF SOME EXAMPLE EMBODIMENTS

[0045] The following describes in further detail suitable apparatus and possible mechanisms for the provision of improving the prediction accuracy and hence possibly reducing information to be transmitted in video coding systems. In this regard reference is first made to Figure 1 which shows a schematic block diagram of an exemplary apparatus or electronic device 50, which may incorporate a codec according to an embodiment of the invention.

[0046] The electronic device 50 may for example be a mobile terminal or user equipment of a wireless communication system. However, it would be appreciated that embodiments of the invention may be implemented within any electronic device or apparatus which may require encoding and decoding or encoding or decoding video images.

[0047] The apparatus 50 may comprise a housing 30 for incorporating and protecting the device. The apparatus 50 further may comprise a display 32 in the form of a liquid crystal

Nokia Exhibit 2004, p. 41
Amazon.com v. Nokia
IPR2024-00605

display. In other embodiments of the invention the display may be any suitable display technology suitable to display an image or video. The apparatus 50 may further comprise a keypad 34. In other embodiments of the invention any suitable data or user interface mechanism may be employed. For example the user interface may be implemented as a virtual keyboard or data entry system as part of a touch-sensitive display. The apparatus may comprise a microphone 36 or any suitable audio input which may be a digital or analogue signal input. The apparatus 50 may further comprise an audio output device which in embodiments of the invention may be any one of: an earpiece 38, speaker, or an analogue audio or digital audio output connection. The apparatus 50 may also comprise a battery 40 (or in other embodiments of the invention the device may be powered by any suitable mobile energy device such as solar cell, fuel cell or clockwork generator). The apparatus may further comprise an infrared port 42 for short range line of sight communication to other devices. In other embodiments the apparatus 50 may further comprise any suitable short range communication solution such as for example a Bluetooth wireless connection or a USB/firewire wired connection.

[0048] The apparatus 50 may comprise a controller 56 or processor for controlling the apparatus 50. The controller 56 may be connected to memory 58 which in embodiments of the invention may store both data in the form of image and audio data and/or may also store instructions for implementation on the controller 56. The controller 56 may further be connected to codec circuitry 54 suitable for carrying out coding and decoding of audio and/or video data or assisting in coding and decoding carried out by the controller 56.

[0049] The apparatus 50 may further comprise a card reader 48 and a smart card 46, for example a UICC and UICC reader for providing user information and being suitable for providing authentication information for authentication and authorization of the user at a network.

[0050] The apparatus 50 may comprise radio interface circuitry 52 connected to the controller and suitable for generating wireless communication signals for example for communication with a cellular communications network, a wireless communications system or a wireless local area network. The apparatus 50 may further comprise an antenna 44 connected to the radio interface circuitry 52 for transmitting radio frequency signals generated at the radio interface circuitry 52 to other apparatus(es) and for receiving radio frequency signals from other apparatus(es).

Nokia Exhibit 2004, p. 42
Amazon.com v. Nokia
IPR2024-00605

[0051] In some embodiments of the invention, the apparatus 50 comprises a camera capable of recording or detecting individual frames which are then passed to the codec 54 or controller for processing. In some embodiments of the invention, the apparatus may receive the video image data for processing from another device prior to transmission and/or storage. In some embodiments of the invention, the apparatus 50 may receive either wirelessly or by a wired connection the image for coding/decoding.

[0052] With respect to Figure 3, an example of a system within which embodiments of the present invention can be utilized is shown. The system 10 comprises multiple communication devices which can communicate through one or more networks. The system 10 may comprise any combination of wired or wireless networks including, but not limited to a wireless cellular telephone network (such as a GSM, UMTS, CDMA network etc), a wireless local area network (WLAN) such as defined by any of the IEEE 802.x standards, a Bluetooth personal area network, an Ethernet local area network, a token ring local area network, a wide area network, and the Internet.

[0053] The system 10 may include both wired and wireless communication devices or apparatus 50 suitable for implementing embodiments of the invention.

[0054] For example, the system shown in Figure 3 shows a mobile telephone network 11 and a representation of the internet 28. Connectivity to the internet 28 may include, but is not limited to, long range wireless connections, short range wireless connections, and various wired connections including, but not limited to, telephone lines, cable lines, power lines, and similar communication pathways.

[0055] The example communication devices shown in the system 10 may include, but are not limited to, an electronic device or apparatus 50, a combination of a personal digital assistant (PDA) and a mobile telephone 14, a PDA 16, an integrated messaging device (IMD) 18, a desktop computer 20, a notebook computer 22. The apparatus 50 may be stationary or mobile when carried by an individual who is moving. The apparatus 50 may also be located in a mode of transport including, but not limited to, a car, a truck, a taxi, a bus, a train, a boat, an airplane, a bicycle, a motorcycle or any similar suitable mode of transport.

[0056] Some or further apparatuses may send and receive calls and messages and communicate with service providers through a wireless connection 25 to a base station 24. The base station 24 may be connected to a network server 26 that allows communication between the

Nokia Exhibit 2004, p. 43
Amazon.com v. Nokia
IPR2024-00605

mobile telephone network 11 and the internet 28. The system may include additional communication devices and communication devices of various types.

[0057] The communication devices may communicate using various transmission technologies including, but not limited to, code division multiple access (CDMA), global systems for mobile communications (GSM), universal mobile telecommunications system (UMTS), time divisional multiple access (TDMA), frequency division multiple access (FDMA), transmission control protocol-internet protocol (TCP-IP), short messaging service (SMS), multimedia messaging service (MMS), email, instant messaging service (IMS), Bluetooth, IEEE 802.11 and any similar wireless communication technology. A communications device involved in implementing various embodiments of the present invention may communicate using various media including, but not limited to, radio, infrared, laser, cable connections, and any suitable connection.

[0058] With respect to Figure 4a, a block diagram of a video encoder suitable for carrying out embodiments of the invention is shown. Furthermore, with respect to Figures 5a and 5b, the operation of the encoder exemplifying embodiments of the invention specifically with respect to construction of the list of candidate predictions is shown as a flow diagram.

[0059] Figure 4a shows the encoder as comprising a pixel predictor 302, prediction error encoder 303 and prediction error decoder 304. Figure 4a also shows an embodiment of the pixel predictor 302 as comprising an inter-predictor 306, an intra-predictor 308, a mode selector 310, a filter 316, and a reference frame memory 318. In this embodiment the mode selector 310 comprises a block processor 381 and a cost evaluator 382. The encoder may further comprise an entropy encoder 330 for entropy encoding the bit stream.

[0060] Figure 4b depicts an embodiment of the inter predictor 306. The inter predictor 306 comprises a reference frame selector 360 for selecting reference frame or frames, a motion vector definer 361, a prediction list modifier 363 and a motion vector selector 364. These elements or some of them may be part of a prediction processor 362 or they may be implemented by using other means.

[0061] The pixel predictor 302 receives the image 300 to be encoded at both the inter-predictor 306 (which determines the difference between the image and a motion compensated reference frame 318) and the intra-predictor 308 (which determines a prediction for an image block based only on the already processed parts of the current frame or picture). The output of

Nokia Exhibit 2004, p. 44
Amazon.com v. Nokia
IPR2024-00605

both the inter-predictor and the intra-predictor may be passed to the mode selector 310. The intra-predictor 308 may have more than one intra-prediction modes. Hence, each mode may perform the intra-prediction and provide the predicted signal to the mode selector 310. The mode selector 310 also receives a copy of the image 300.

[0062] The mode selector 310 determines which encoding mode to use to encode the current block. If the mode selector 310 decides to use an inter-prediction mode it will pass the output of the inter-predictor 306 to the output of the mode selector 310. If the mode selector 310 decides to use an intra-prediction mode it will pass the output of one of the intra-predictor modes to the output of the mode selector 310.

[0063] The output of the mode selector is passed to a first summing device 321. The first summing device may subtract the pixel predictor 302 output from the image 300 to produce a first prediction error signal 320 which is input to the prediction error encoder 303.

[0064] The pixel predictor 302 further receives from a preliminary reconstructor 339 the combination of the prediction representation of the image block 312 and the output 338 of the prediction error decoder 304. The preliminary reconstructed image 314 may be passed to the intra-predictor 308 and to a filter 316. The filter 316 receiving the preliminary representation may filter the preliminary representation and output a final reconstructed image 340 which may be saved in a reference frame memory 318. The reference frame memory 318 may be connected to the inter-predictor 306 to be used as the reference image against which the future image 300 is compared in inter-prediction operations.

[0065] The operation of the pixel predictor 302 may be configured to carry out any known pixel prediction algorithm known in the art.

[0066] The pixel predictor 302 may also comprise a filter 385 to filter the predicted values before outputting them from the pixel predictor 302.

[0067] The operation of the prediction error encoder 302 and prediction error decoder 304 will be described hereafter in further detail. In the following examples the encoder generates images in terms of 16x16 pixel macroblocks which go to form the full image or picture. Thus, for the following examples the pixel predictor 302 outputs a series of predicted macroblocks of size 16x16 pixels and the first summing device 321 outputs a series of 16x16 pixel residual data macroblocks which may represent the difference between a first macro-block in the image 300

Nokia Exhibit 2004, p. 45
Amazon.com v. Nokia
IPR2024-00605

against a predicted macro-block (output of pixel predictor 302). It would be appreciated that other size macro blocks may be used.

[0068] The prediction error encoder 303 comprises a transform block 342 and a quantizer 344. The transform block 342 transforms the first prediction error signal 320 to a transform domain. The transform is, for example, the DCT transform. The quantizer 344 quantizes the transform domain signal, e.g. the DCT coefficients, to form quantized coefficients.

[0069] The prediction error decoder 304 receives the output from the prediction error encoder 303 and performs the opposite processes of the prediction error encoder 303 to produce a decoded prediction error signal 338 which when combined with the prediction representation of the image block 312 at the second summing device 339 produces the preliminary reconstructed image 314. The prediction error decoder may be considered to comprise a dequantizer 346, which dequantizes the quantized coefficient values, e.g. DCT coefficients, to reconstruct the transform signal and an inverse transformation block 348, which performs the inverse transformation to the reconstructed transform signal wherein the output of the inverse transformation block 348 contains reconstructed block(s). The prediction error decoder may also comprise a macroblock filter (not shown) which may filter the reconstructed macroblock according to further decoded information and filter parameters.

[0070] In the following the operation of an example embodiment of the inter predictor 306 will be described in more detail. The inter predictor 306 receives the current block for inter prediction. It is assumed that for the current block there already exists one or more neighbouring blocks which have been encoded and motion vectors have been defined for them. For example, the block on the left side and/or the block above the current block may be such blocks. Spatial motion vector predictions for the current block can be formed e.g. by using the motion vectors of the encoded neighbouring blocks and/or of non-neighbour blocks in the same slice or frame, using linear or non-linear functions of spatial motion vector predictions, using a combination of various spatial motion vector predictors with linear or non-linear operations, or by any other appropriate means that do not make use of temporal reference information. It may also be possible to obtain motion vector predictors by combining both spatial and temporal prediction information of one or more encoded blocks. These kinds of motion vector predictors may also be called as spatio-temporal motion vector predictors.

Nokia Exhibit 2004, p. 46
Amazon.com v. Nokia
IPR2024-00605

[0071] Reference frames used in encoding the neighbouring blocks have been stored to the reference frame memory 404. The reference frames may be short term references or long term references and each reference frame may have a unique index indicative of the location of the reference frame in the reference frame memory. When a reference frame is no longer used as a reference frame it may be removed from the reference frame memory or marked as a non-reference frame wherein the storage location of that reference frame may be occupied for a new reference frame. In addition to the reference frames of the neighbouring blocks the reference frame selector 360 may also select one or more other frames as potential reference frames and store them to the reference frame memory.

[0072] Motion vector information of encoded blocks is also stored into the memory so that the inter predictor 306 is able to retrieve the motion vector information when processing motion vector candidates for the current block.

[0073] In some embodiments the motion vectors are stored into one or more lists. For example, motion vectors of uni-directionally predicted frames (e.g. P-frames) may be stored to a list called as list 0. For bi-directionally predicted frames (e.g. B-frames) there may be two lists (list 0 and list 1) and for multi-predicted frames there may be more than two lists. Reference frame indices possibly associated with the motion vectors may also be stored in one or more lists.

[0074] In some embodiments there may be two or more motion vector prediction procedures and each procedure may have its own candidate set creation process. In one procedure, only the motion vector values are used. In another procedure, which may be called as a Merge Mode, each candidate element may comprise 1) The information whether 'block was uni-predicted using only list0' or 'block was uni-predicted using only list1' or 'block was bi-predicted using list0 and list1' 2) motion vector value for list0 3) Reference picture index in list0 4) motion vector value for list1 5) Reference picture index list1. Therefore, whenever two prediction candidates are to be compared, not only the motion vector values are compared, but also the five values mentioned above may be compared to determine whether they correspond with each other or not. On the other hand, if any of the comparisons indicate that the prediction candidates do not have equal motion information, no further comparisons need be performed.

[0075] The motion vector definer 361 defines candidate motion vectors for the current frame by using one or more of the motion vectors of one or more neighbour blocks and/or other blocks

Nokia Exhibit 2004, p. 47
Amazon.com v. Nokia
IPR2024-00605

of the current block in the same frame and/or co-located blocks and/or other blocks of the current block in one or more other frames. These candidate motion vectors can be called as a set of candidate predictors or a predictor set. Each candidate predictor thus represents the motion vector of one or more already encoded block. In some embodiments the motion vector of the candidate predictor is set equal to the motion vector of a neighbour block for the same list if the current block and the neighbour block refer to the same reference frames for that list. Also for temporal prediction there may be one or more previously encoded frames wherein motion vectors of a co-located block or other blocks in a previously encoded frame can be selected as candidate predictors for the current block. The temporal motion vector predictor candidate can be generated by any means that make use of the frames other than the current frame.

[0076] The candidate motion vectors can also be obtained by using more than one motion vector of one or more other blocks such as neighbour blocks of the current block and/or co-located blocks in one or more other frames. As an example, any combination of the motion vector of the block to the left of the current block, the motion vector of the block above the current block, and the motion vector of the block at the up-right corner of the current block may be used (i.e. the block to the right of the block above the current block). The combination may be a median of the motion vectors or calculated by using other formulas. For example, one or more of the motion vectors to be used in the combination may be scaled by a scaling factor, an offset may be added, and/or a constant motion vector may be added. In some embodiments the combined motion vector is based on both temporal and spatial motion vectors, e.g. the motion vector of one or more of the neighbour block or other block of the current block and the motion vector of a co-located block or other block in another frame.

[0077] If a neighbour block does not have any motion vector information a default motion vector such as a zero motion vector may be used instead.

[0078] Figure 9 illustrates an example of a coding unit 900 and some neighbour blocks 901—905 of the coding unit. As can be seen from Figure 9, if the coding unit 900 represents the current block, the neighbouring blocks 901—905 labelled A0, A1, B0, B1 and B2 could be such neighbour blocks which may be used when obtaining the candidate motion vectors.

[0079] Creating additional or extra motion vector predictions based on previously added predictors may be needed when the current number of candidates is limited or insufficient. This kind of creating additional candidates can be performed by combining previous two predictions

Nokia Exhibit 2004, p. 48
Amazon.com v. Nokia
IPR2024-00605

and/or processing one previous candidate by scaling or adding offset and/or adding a zero motion vector with various reference indices. Hence, the motion vector definer 361 may examine how many motion vector candidates can be defined and how many potential candidate motion vectors exist for the current block. If the number of potential motion vector candidates is smaller than a threshold, the motion vector definer 361 may create additional motion vector predictions.

[0080] In some embodiments the combined motion vector can be based on motion vectors in different lists. For example, one motion vector may be defined by combining one motion vector from the list 0 and one motion vector from the list 1 e.g. when the neighbouring or co-located block is a bi-directionally predicted block and there exists one motion vector in the list 0 and one motion vector in the list 1 for the bi-directionally predicted block.

[0081] To distinguish the current block from the encoded/decoded blocks the motion vectors of which are used as candidate motion vectors, those encoded/decoded blocks are also called as reference blocks in this application.

[0082] In some embodiments not only the motion vector information of the reference block(s) is obtained (e.g. by copying) but also a reference index of the reference block in the reference picture list may be copied to the candidate list. The information whether the block was uni-predicted using only list0 or the block was uni-predicted using only list1 or the block was bi-predicted using list0 and list1 may also be copied. The candidate list may also be called as a candidate set or a set of motion vector prediction candidates.

[0083] Figure 6a illustrates an example of spatial and temporal prediction of a prediction unit. There is depicted the current block 601 in the frame 600 and a neighbour block 602 which already has been encoded. The motion vector definer 361 has defined a motion vector 603 for the neighbour block 602 which points to a block 604 in the previous frame 605. This motion vector can be used as a potential spatial motion vector prediction 610 for the current block. Figure 6a depicts that a co-located block 606 in the previous frame 605, i.e. the block at the same location than the current block but in the previous frame, has a motion vector 607 pointing to a block 609 in another frame 608. This motion vector 607 can be used as a potential temporal motion vector prediction-611 for the current frame.

[0084] Figure 6b illustrates another example of spatial and temporal prediction of a prediction unit. In this example the block 606 of the previous frame 605 uses bi-directional prediction based on the block 609 of the frame preceding the frame 605 and on the block 612

Nokia Exhibit 2004, p. 49
Amazon.com v. Nokia
IPR2024-00605

succeeding the current frame 600. The temporal motion vector prediction for the current block 601 may be formed by using both the motion vectors 607, 614 or either of them.

[0085] The operation of the prediction list modifier 363 will now be described in more detail with reference to the flow diagram of Figures 5a and 5b. The prediction list modifier 363 initializes a motion vector prediction list to default values in block 500 of Figure 5a. The prediction list modifier 363 may also initialize a list index to an initial value such as zero. Then, in block 501 the prediction list modifier checks whether there are any motion vector candidates to process. If there is at least one motion vector candidate in the predictor set for processing, the prediction list modifier 363 generates the next motion vector candidate which may be a temporal motion vector or a spatial motion vector. The comparison can be an identicality/equivalence check or comparing the (absolute) difference against a threshold or any other similarity metric.

[0086] In the following, a merge process for motion information coding according to an example embodiment will be described in more detail. The encoder creates a list of motion prediction candidates from which one of the candidates is to be signalled as the motion information for the current coding unit or prediction unit. The motion prediction candidates may consist of several spatial motion predictions and a temporal motion prediction. The spatial candidates can be obtained from the motion information of e.g. the spatial neighbour blocks A0, A1, B0, B1, B2, whose motion information is used as spatial candidate motion predictions. The temporal motion prediction candidate may be obtained by processing the motion of a block in a frame other than the current frame. In this example embodiment, the encoder operations to construct the merge list for the spatial candidates may include the following. The operations may be carried out by the prediction list modifier 363, for example.

[0087] A maximum number of spatial motion prediction candidates to be included in the merge list may be defined. This maximum number may have been stored, for example, to the memory 58 of the apparatus 50, or to another appropriate place. It is also possible to determine the maximum number by using other means, or it may be determined in the software of the encoder of the apparatus 50.

[0088] In some embodiments the maximum number of spatial motion prediction candidates to be included in the merge list is four but in some embodiments the maximum number may be less than four or greater than four.

Nokia Exhibit 2004, p. 50
Amazon.com v. Nokia
IPR2024-00605

[0089] In this example the spatial motion prediction candidates are the spatial neighbour blocks A0, A1, B0, B1, B2. The spatial motion vector prediction candidate A1 is located on the left side of the prediction unit when the encoding/decoding order is from left to right and from top to bottom of the frame, slice or another entity to be encoded/decoded. Respectively, the spatial motion vector prediction candidate B1 is located above the prediction unit. third; the spatial motion vector prediction candidate B0 is on the right side of the spatial motion vector prediction candidate B1; the spatial motion vector prediction candidate A0 is below the spatial motion vector prediction candidate A1; and the spatial motion vector prediction candidate B2 is located on the same column than spatial motion vector prediction candidate A1 and on the same row than the spatial motion vector prediction candidate B1. In other words, the spatial motion vector prediction candidate B2 is cornerwise neighbouring the prediction unit as can be seen e.g. from Figure 9.

[0090] These spatial motion prediction candidates can be processed in a predetermined order, for example, A1, B1, B0, A0 and B2. The first spatial motion prediction candidate to be selected for further examination is thus A1. Before further examination is performed for the selected spatial motion prediction candidate, it may be determined whether the merge list already contains a maximum number of spatial motion prediction candidates. Hence, the prediction list modifier 363 compares 502 the number of spatial motion prediction candidates in the merge list with the maximum number, and if the number of spatial motion prediction candidates in the merge list is not less than the maximum number, the selected spatial motion prediction candidate is not included in the merge list and the process of constructing the merge list can be stopped 526. On the other hand, if the number of spatial motion prediction candidates in the merge list is less than the maximum number, a further analyses of the selected spatial motion prediction candidate is performed (blocks 504-522).

[0091] For all the spatial motion prediction candidates for which the further analyses is to be performed, some or all of the following conditions below may be tested for determining whether to include the spatial motion prediction candidate in the merge list.

[0092] The prediction list modifier 363 examines 504 if the prediction unit or block covering the spatial motion prediction candidate block is not available for motion prediction. If so, the candidate is not included in the merge list. The reason that the block is not available may be that the block is either coded in intra mode or resides in a different slice or outside of the picture area.

Nokia Exhibit 2004, p. 51
Amazon.com v. Nokia
IPR2024-00605

[0093] In addition to the common conditions above, for each spatial motion prediction candidate, if any of the following conditions holds, then the candidate is not included in the merge list, otherwise, it is included.

[0094] The prediction list modifier 363 determines 506 which spatial motion prediction candidate of the set of spatial motion prediction candidates is in question. If the spatial motion prediction candidate is the block A1, one or more of the following conditions may be examined 508, 510 to determine whether to include this spatial motion prediction candidate in the merge list or not. If the current coding unit 100 is vertically split into two rectangle prediction units 103, 104 as depicted in Figure 10b and the current prediction unit is the second prediction unit 104 in the coding/decoding order (508), this spatial motion prediction candidate is not included in the merge list. If the current coding unit 100 is not vertically split into two rectangle prediction units but it is horizontally split into two rectangle prediction units 101, 102 as depicted in Figure 10a and the current prediction unit is the second prediction unit in the coding/decoding order and the block A1 has the same motion information as the block B1 (510), this spatial motion prediction candidate (block A1) is not included in the merge list. In the example of Figure 10a the second prediction unit is the lower prediction unit 102 of the coding unit 100 and in the example of Figure 10b the second prediction unit is the rightmost prediction unit 104 of the coding unit 100. If none of the conditions above is fulfilled the block A1 is included in the merge list as a spatial motion prediction candidate (524).

[0095] If the spatial motion prediction candidate is the block B1, one or more of the following conditions may be examined 512, 514 to determine whether to include this spatial motion prediction candidate in the merge list or not. If the current coding unit 100 is horizontally split into two rectangle prediction units 101, 102 as depicted in Figure 10a and the current prediction unit is the second prediction unit 104 in the coding/decoding order (512), this spatial motion prediction candidate is not included in the merge list. If the current coding unit 100 is not horizontally split into two rectangle prediction units and if the block B1 has the same motion information than the block A1 (514), this spatial motion prediction candidate (block B1) is not included in the merge list. If none of the conditions above is fulfilled the block B1 is included in the merge list as a spatial motion prediction candidate (524).

[0096] If the spatial motion prediction candidate is the block B0, this spatial motion prediction candidate is not included in the merge list if the block B0 has the same motion

Nokia Exhibit 2004, p. 52
Amazon.com v. Nokia
IPR2024-00605

information than the block B1 (516). Otherwise, if the number of spatial motion prediction candidates in the merge list is less than the maximum number of spatial motion prediction candidates, this spatial motion prediction candidate (block B0) is included in the merge list (524).

[0097] If the spatial motion prediction candidate is the block A0, this spatial motion prediction candidate is not included in the merge list if the block A0 has the same motion information than the block A1 (518). Otherwise, if the number of spatial motion prediction candidates in the merge list is less than the maximum number of spatial motion prediction candidates, this spatial motion prediction candidate (block A0) is included in the merge list (524).

[0098] If the spatial motion prediction candidate is the block B2, this spatial motion prediction candidate is not included in the merge list if the maximum number of spatial motion prediction candidates is four and the other blocks A0, A1, B0, and B1 are all decided to be included in the merge list (520). Otherwise, if the number of spatial motion prediction candidates in the merge list is less than the maximum number of spatial motion prediction candidates, the block B2 is not included in the merge list if the block B2 has the same motion information than the block B1 or the block A1 (522).

[0099] Then, after processing the blocks A1, B1, B0, A0 and B2 and including a subset of them in the merge list based on the above described conditions, no more redundancy check between these candidates are performed and remaining temporal motion prediction candidate and/or other possible additional candidates may be processed.

[00100] Comparing two blocks whether they have the same motion may be performed by comparing all the elements of the motion information, namely 1) The information whether 'the prediction unit is uni-predicted using only reference picture list0' or 'the prediction unit is uni-predicted using only reference picture list1' or 'the prediction unit is bi-predicted using both reference picture list0 and list1' 2) Motion vector value corresponding to the reference picture list0 3) Reference picture index in the reference picture list0 4) Motion vector value corresponding to the reference picture list1 5) Reference picture index in the reference picture list1.

Nokia Exhibit 2004, p. 53
Amazon.com v. Nokia
IPR2024-00605

[00101] In some embodiments similar restrictions for comparing candidate pairs can be applied if the current coding unit is coded/decoded by splitting into four or any number of prediction units.

[00102] The maximum number of merge list candidates can be any non-zero value. In the example above the merger list candidates were the spatial neighbour blocks A0, A1, B0, B1, B2 and the temporal motion prediction candidate, but there may be more than one temporal motion prediction candidate and also other spatial motion prediction candidates than the spatial neighbour blocks. In some embodiments there may also be other spatial neighbour blocks than the blocks A0, A1, B0, B1, B2.

[00103] It is also possible that the maximum number of spatial motion prediction candidates included in the list can be different than four.

[00104] In some embodiments the maximum number of merge list candidates and maximum number of spatial motion prediction candidates included in the list can depend on whether a temporal motion vector candidate is included in the list or not.

[00105] A different number of spatial motion prediction candidates located at various locations in the current frame can be processed. The locations can be the same as or different than A1, B1, B0, A0 and B2.

[00106] The decision of including which spatial motion prediction candidates in the list can be realized in two steps. In the first step, some of the candidates are eliminated by checking whether the candidate block is available and/or the candidate block's prediction mode is intra and/or whether the current block is a second prediction unit of a coding unit coded with two prediction units and the candidate has the same motion with the first prediction unit. In the second step, remaining candidates are examined and some or all of them are included in the merge list. The examination in the second step does not include comparing motion information of each possible candidate pair but includes a subset of the possible comparison combinations.

[00107] The decisions for the candidates can be taken in any order of A1, B1, B0, A0 and B2 or independently in parallel.

[00108] For each candidate and/or a subset of the candidates, the following conditions may also be checked: Whether the candidate block has the same motion as the first prediction unit of the current coding unit when the current coding unit is split into two rectangle prediction units and the current prediction unit is the second prediction unit in the coding/decoding order.

Nokia Exhibit 2004, p. 54
Amazon.com v. Nokia
IPR2024-00605

[00109] Additional conditions related to various properties of current and/or previous slices and/or current and/or neighbour blocks can be utilized for determining whether to include a candidate in the list.

[00110] Motion comparison can be realized by comparing a subset of the whole motion information. For example, only the motion vector values for some or all reference picture lists and/or reference indices for some or all reference picture lists and/or an identifier value assigned to each block to represent its motion information can be compared. The comparison can be an identicality or an equivalence check or comparing the (absolute) difference against a threshold or any other similarity metric.

[00111] Conditions for deciding whether a candidate is to be included in the list can include motion information comparison with any subset of the candidates as long as not all possible candidate pairs are compared eventually.

[00112] Deciding whether a temporal motion vector candidate is to be included in the list can be based on comparing its motion information with motion information of a subset of the spatial motion vector prediction candidates.

[00113] When comparing motion information of two blocks, motion information of additional blocks can be considered too. For example, when comparing the block B2 and the block A1, all the blocks between the block B2 and the block A1 (illustrated in Figure 12) are checked whether they have the same motion; and when comparing the block B2 and the block B1, all the blocks between the block B2 and the block B1 (illustrated in Figure 12) are checked whether they have the same motion. This embodiment can be implemented so that the right-most block of each prediction unit or all blocks of each prediction unit may store the information of how many consecutive blocks to the above have the same motion information. Also the bottom-most block of each prediction unit or all blocks of each prediction unit may store the information of how many consecutive blocks to the left have the same motion information. Using this information the condition for not including B0 in the list can be realized by checking if the number of consecutive blocks with the same motion to the left of B0 is greater than 0. The condition for not including A0 in the list can be realized by checking if the number of consecutive blocks with same motion to the above of A0 is greater than 0. The conditions for not including B2 can be modified as follows:

Nokia Exhibit 2004, p. 55
Amazon.com v. Nokia
IPR2024-00605

[00114] It is not examined whether the block B2 has same motion as the block B1 or whether the block B2 has same motion as the block A1, but how many consecutive blocks exists to the left of the block B1 with the same motion than the block B1 and/or how many consecutive blocks exist above the block A1 with the same motion. If the number of consecutive blocks with the same motion to the left of the block B1 is greater than the number of blocks between B2 and B1, or if the number of consecutive blocks with the same motion above the block A1 is greater than the number of blocks between the block B2 and the block A1, the block B2 is not included in the merge list.

[00115] If the above implementation is used, the value of how many consecutive blocks to the left/above have the same motion information can be determined by direct comparison of motion information or checking the prediction mode and/or the merge index if the block employs a merge process.

[00116] When coding/decoding the selected merge index, the information whether the merge process is employed for coding/decoding a Skip mode coding unit or an Inter Merge mode prediction unit can be taken into account. For example, if a context adaptive binary arithmetic coder (CABAC) is used for entropy coding/decoding, different contexts can be used for the bins depending on the coding mode (Skip mode or inter merge mode) of the current block. Furthermore, assigning two contexts depending on whether the merge process is employed in a Skip mode coding unit or an inter Merge mode prediction unit can be applied for only the most significant bin of the merge index.

[00117] During the process of removal of redundant candidates, comparison between motion vector predictor candidates can also be based on any other information than the motion vector values. For example, it can be based on linear or non-linear functions of motion vector values, coding or prediction types of the blocks used to obtain the motion information, block size, the spatial location in the frame/(largest) coding unit/macroblock, the information whether blocks share the same motion with a block, the information whether blocks are in the same coding/prediction unit, etc.

[00118] The following pseudo code illustrates an example embodiment of the invention for constructing the merging list.

[00119] Inputs to this process are

Nokia Exhibit 2004, p. 56
Amazon.com v. Nokia
IPR2024-00605

– a luma location (xP, yP) specifying the top-left luma sample of the current prediction unit relative to the top-left sample of the current picture;

– variables specifying the width and the height of the prediction unit for luma, nPSW and nPSH; and

– a variable PartIdx specifying the index of the current prediction unit within the current coding unit.

[00120] Outputs of this process are (with N being replaced by A_0, A_1, B_0, B_1 or B_2 and with X being replaced by 0 or 1)

– the availability flags availableFlagN of the neighbouring prediction units,

– the reference indices refIdxLXN of the neighbouring prediction units,

– the prediction list utilization flags predFlagLXN of the neighbouring prediction units,

– the motion vectors mvLXN of the neighbouring prediction units.

[00121] For the derivation of availableFlagN, with N being A_0, A_1, B_0, B_1 or B_2 and (xN, yN) being (xP−1, yP + nPSH), (xP−1, yP + nPSH−1), (xP + nPSW, yP−1), (xP+nPSW−1, yP−1) or (xP−1, yP−1), the following applies.

– If one of the following conditions is true, the availableFlagN is set equal to 0, both components mvLXN are set equal to 0, refIdxLXN and predFlagLX[xN, yN] of the prediction unit covering luma location (xN, yN) are assigned respectively to mvLXN, refIdxLXN and predFlagLXN.

– N is equal to B_2 and $availableFlagA_0$ + $availableFlagA_1$ + $availableFlagB_0$ + $availableFlagB_1$ is equal to 4.

– The prediction unit covering luma location (xN, yN) is not available or PredMode is MODE_INTRA.

– N is equal to A1 and PartMode of the current prediction unit is PART_Nx2N or PART_nLx2N or PART_nRx2N and PartIdx is equal to 1.

– N is equal to A1 and PartMode of the current prediction unit is PART_2NxN or PART_2NxnU or PART_2NxnD and PartIdx is equal to 1 and the prediction units covering luma location (xP+nPSW−1, yP−1) (N = B1) and luma location (xN, yN) (Cand. N) have identical motion parameters:

– mvLX[xP+nPSW−1, yP−1] == mvLX[xN, yN]

– refIdxLX[xP+nPSW−1, yP−1] == refIdxLX[xN, yN]

Nokia Exhibit 2004, p. 57
Amazon.com v. Nokia
IPR2024-00605

– predFlagLX[xP+nPSW−1, yP−1] == predFlagLX[xN, yN]

– N is equal to B1 and PartMode of the current prediction unit is 2NxN or PART_2NxnU or PART_2NxnD and PartIdx is equal to 1.

– N is equal to B1 and the prediction units covering luma location (xP−1, yP+nPSH−1) (N = A1) and luma location (xN, yN) (Cand. N) have identical motion parameters:

– mvLX[xP−1, yP+nPSH−1] == mvLX[xN, yN]

– refIdxLX[xP−1, yP+nPSH−1] == refIdxLX[xN, yN]

– predFlagLX[xP−1, yP+nPSH−1] == predFlagLX[xN, yN]

– N is equal to B0 and the prediction units covering luma location (xP+nPSW−1, yP−1) (N = B1) and luma location (xN, yN) (Cand. N) have identical motion parameters:

– mvLX[xP+nPSW−1, yP−1] == mvLX[xN, yN]

– refIdxLX[xP+nPSW−1, yP−1] == refIdxLX[xN, yN]

– predFlagLX[xP+nPSW−1, yP−1] == predFlagLX[xN, yN]

– N is equal to A0 and the prediction units covering luma location (xP−1, yP+nPSH−1) (N = A1) and luma location (xN, yN) (Cand. N) have identical motion parameters:

– mvLX[xP−1, yP+nPSH−1] == mvLX[xN, yN]

– refIdxLX[xP−1, yP+nPSH−1] == refIdxLX[xN, yN]

– predFlagLX[xP−1, yP+nPSH−1] == predFlagLX[xN, yN]

– N is equal to B2 and the prediction units covering luma location (xP+nPSW−1, yP−1) (N = B1) and luma location (xN, yN) (Cand. N) have identical motion parameters:

– mvLX[xP+nPSW−1, yP−1] == mvLX[xN, yN]

– refIdxLX[xP+nPSW−1, yP−1] == refIdxLX[xN, yN]

– predFlagLX[xP+nPSW−1, yP−1] == predFlagLX[xN, yN]

– N is equal to B2 and the prediction units covering luma location (xP−1, yP+nPSH−1) (N = A1) and luma location (xN, yN) (Cand. N) have identical motion parameters:

– mvLX[xP−1, yP+nPSH−1] == mvLX[xN, yN]

– refIdxLX[xP−1, yP+nPSH−1] == refIdxLX[xN, yN]

– predFlagLX[xP−1, yP+nPSH−1] == predFlagLX[xN, yN]

– PartMode of the current prediction unit is PART_NxN and PartIdx is equal to 3 and the prediction units covering luma location (xP−1, yP) (PartIdx = 2) and luma location (xP−1, yP−1) (PartIdx = 0) have identical motion parameters:

Nokia Exhibit 2004, p. 58
Amazon.com v. Nokia
IPR2024-00605

– mvLX[xP−1, yP] == mvLX[xP−1, yP−1]

– refIdxLX[xP−1, yP] == refIdxLX[xP−1, yP−1]

– predFlagLX[xP−1, yP] == predFlagLX[xP−1, yP−1]

and the prediction units covering luma location (xP, yP−1) (PartIdx = 1) and luma location (xN, yN) (Cand. N) have identical motion parameters:

– mvLX[xP, yP−1] == mvLX[xN, yN]

– refIdxLX[xP, yP−1] == refIdxLX[xN, yN]

– predFlagLX[xP, yP−1] == predFlagLX[xN, yN]

– PartMode of the current prediction unit is PART_NxN and PartIdx is equal to 3 and the prediction units covering luma location (xP, yP−1) (PartIdx = 1) and luma location (xP−1, yP−1) (PartIdx = 0) have identical motion parameters:

– mvLX[xP, yP−1] == mvLX[xP−1, yP−1]

– refIdxLX[xP, yP−1] == refIdxLX[xP−1, yP−1]

– predFlagLX[xP, yP−1] == predFlagLX[xP−1, yP−1]

and the prediction units covering luma location (xP−1, yP) (PartIdx = 2) and luma location (xN, yN) (Cand. N) have identical motion parameters:

– mvLX[xP−1, yP] == mvLX[xN, yN]

– refIdxLX[xP−1, yP] == refIdxLX[xN, yN]

– predFlagLX[xP−1, yP] == predFlagLX[xN, yN]

– Otherwise, availableFlagN is set equal to 1 and the variables mvLX[xN, yN], refIdxLX[xN, yN] and predFlagLX[xN, yN] of the prediction unit covering luma location (xN, yN) are assigned respectively to mvLXN, refIdxLXN and predFlagLXN.

[00122] For the motion vector predictor candidate list generation process, each list candidate can include more information than the motion vector value, such as the reference lists used, the reference frames used in each list and motion vector for each list.

[00123] When all motion vector candidates have been examined, one motion vector is selected to be used as the motion vector for the current block. The motion vector selector 364 may examine different motion vectors in the list and determine which motion vector provides the most efficient encoding result, or the selection of the motion vector may be based on to other criteria as well. Information of the selected motion vector is provided for the mode selector for encoding and transmission to the decoder or for storage when the mode selector determines to

Nokia Exhibit 2004, p. 59
Amazon.com v. Nokia
IPR2024-00605

use inter prediction for the current block. The information may include the index of the motion vector in the list, and/or motion vector parameters or other appropriate information.

[00124] The selected motion vector and the block relating to the motion vector is used to generate the prediction representation of the image block 312 which is provided as the output of the mode selector. The output may be used by the first summing device 321 to produce the first prediction error signal 320, as was described above.

[00125] The selected motion vector predictor candidate can be modified by adding a motion vector difference or can be used directly as the motion vector of the block. Moreover, after the motion compensation is performed by using the selected motion vector predictor candidate, the residual signal of the block can be transform coded or skipped to be coded.

[00126] Although the embodiments above have been described with respect to the size of the macroblock being 16x16 pixels, it would be appreciated that the methods and apparatus described may be configured to handle macroblocks of different pixel sizes.

[00127] In the following the operation of an example embodiment of the decoder 600 is depicted in more detail with reference to Figure 7.

[00128] At the decoder side similar operations are performed to reconstruct the image blocks. Figure 7 shows a block diagram of a video decoder 700 suitable for employing embodiments of the invention and Figures 8a and 8b show a flow diagram of an example of a method in the video decoder. The bitstream to be decoded may be received from the encoder, from a network element, from a storage medium or from another source. The decoder is aware of the structure of the bitstream so that it can determine the meaning of the entropy coded codewords and may decode the bitstream by an entropy decoder 701 which performs entropy decoding on the received signal. The entropy decoder thus performs the inverse operation to the entropy encoder 330 of the encoder described above. The entropy decoder 701 outputs the results of the entropy decoding to a prediction error decoder 702 and a pixel predictor 704.

[00129] In some embodiments the entropy coding may not be used but another channel encoding may be in use, or the encoded bitstream may be provided to the decoder 700 without channel encoding. The decoder 700 may comprise a corresponding channel decoder to obtain the encoded codewords from the received signal.

[00130] The pixel predictor 704 receives the output of the entropy decoder 701. The output of the entropy decoder 701 may include an indication on the prediction mode used in encoding the

Nokia Exhibit 2004, p. 60
Amazon.com v. Nokia
IPR2024-00605

current block. A predictor selector 714 within the pixel predictor 704 determines that an intra-prediction or an inter-prediction is to be carried out. The predictor selector 714 may furthermore output a predicted representation of an image block 716 to a first combiner 713. The predicted representation of the image block 716 is used in conjunction with the reconstructed prediction error signal 712 to generate a preliminary reconstructed image 718. The preliminary reconstructed image 718 may be used in the predictor 714 or may be passed to a filter 720. The filter 720, if used, applies a filtering which outputs a final reconstructed signal 722. The final reconstructed signal 722 may be stored in a reference frame memory 724, the reference frame memory 724 further being connected to the predictor 714 for prediction operations.

[00131] Also the prediction error decoder 702 receives the output of the entropy decoder 701. A dequantizer 792 of the prediction error decoder 702 may dequantize the output of the entropy decoder 701 and the inverse transform block 793 may perform an inverse transform operation to the dequantized signal output by the dequantizer 792. The output of the entropy decoder 701 may also indicate that prediction error signal is not to be applied and in this case the prediction error decoder produces an all zero output signal.

[00132] The decoder selects the 16x16 pixel residual macroblock to reconstruct. This residual macroblock is also called as a current block.

[00133] The decoder may receive information on the encoding mode used in encoding of the current block. The indication is decoded, when necessary, and provided to the reconstruction processor 791 of the prediction selector 714. The reconstruction processor 791 examines the indication and selects one of the intra-prediction mode(s), if the indication indicates that the block has been encoded using intra-prediction, or the inter-prediction mode, if the indication indicates that the block has been encoded using inter-prediction.

[00134] For inter-prediction mode the reconstruction processor 791 may comprise one or more elements corresponding to the prediction processor 362 of the encoder, such as a motion vector definer, a prediction list modifier and/or a motion vector selector.

[00135] The reconstruction processor 791 initializes a motion vector prediction list to default values in block 800. As was the case in the encoding part, in this example the spatial motion prediction candidates are the spatial neighbour blocks A0, A1, B0, B1, B2 and these spatial motion prediction candidates are processed in the same predetermined order than in the encoder: A1, B1, B0, A0 and B2. The first spatial motion prediction candidate to be selected for further

Nokia Exhibit 2004, p. 61
Amazon.com v. Nokia
IPR2024-00605

examination is thus A1. Before further examination is performed for the selected spatial motion prediction candidate, it is examined whether the merge list already contains a maximum number of spatial motion prediction candidates. If the number of spatial motion prediction candidates in the merge list is not less than the maximum number, the selected spatial motion prediction candidate is not included in the merge list and the process of constructing the merge list can be stopped 826. On the other hand, if the number of spatial motion prediction candidates in the merge list is less than the maximum number, a further analyses of the selected spatial motion prediction candidate is performed (blocks 804-822).

[00136] The decoder examines 804 if the prediction unit or block covering the spatial motion prediction candidate block is not available for motion prediction. If so, the candidate is not included in the merge list. The reason that the block is not available may be that the block is either coded in intra mode or resides in a different slice or outside of the picture area.

[00137] In addition to the common conditions above, for each spatial motion prediction candidate, if any of the following conditions holds, then the candidate is not included in the merge list, otherwise, it is included.

[00138] The decoder determines 806 which spatial motion prediction candidate of the set of spatial motion prediction candidates is in question. If the spatial motion prediction candidate is the block A1, one or more of the following conditions may be examined 808, 810 to determine whether to include this spatial motion prediction candidate in the merge list or not. If the current coding unit 100 is vertically split into two rectangle prediction units 103, 104 as depicted in Figure 10b and the current prediction unit is the second prediction unit 104 in the coding/decoding order (808), this spatial motion prediction candidate is not included in the merge list. If the current coding unit 100 is not vertically split into two rectangle prediction units but it is horizontally split into two rectangle prediction units 101, 102 as depicted in Figure 10a and the current prediction unit is the second prediction unit in the coding/decoding order and the block A1 has the same motion information as the block B1 (810), this spatial motion prediction candidate (block A1) is not included in the merge list. In the example of Figure 10a the second prediction unit is the lower prediction unit 102 of the coding unit 100 and in the example of Figure 10b the second prediction unit is the rightmost prediction unit 104 of the coding unit 100. If none of the conditions above is fulfilled the block A1 is included in the merge list as a spatial motion prediction candidate (824).

Nokia Exhibit 2004, p. 62
Amazon.com v. Nokia
IPR2024-00605

[00139] If the spatial motion prediction candidate is the block B1, one or more of the following conditions may be examined 812, 814 to determine whether to include this spatial motion prediction candidate in the merge list or not. If the current coding unit 100 is horizontally split into two rectangle prediction units 101, 102 as depicted in Figure 10a and the current prediction unit is the second prediction unit 104 in the coding/decoding order (812), this spatial motion prediction candidate is not included in the merge list. If the current coding unit 100 is not horizontally split into two rectangle prediction units and if the block B1 has the same motion information than the block A1 (814), this spatial motion prediction candidate (block B1) is not included in the merge list. If none of the conditions above is fulfilled the block B1 is included in the merge list as a spatial motion prediction candidate (824).

[00140] If the spatial motion prediction candidate is the block B0, this spatial motion prediction candidate is not included in the merge list if the block B0 has the same motion information than the block B1 (816). Otherwise, if the number of spatial motion prediction candidates in the merge list is less than the maximum number of spatial motion prediction candidates, this spatial motion prediction candidate (block B0) is included in the merge list (824).

[00141] If the spatial motion prediction candidate is the block A0, this spatial motion prediction candidate is not included in the merge list if the block A0 has the same motion information than the block A1 (818). Otherwise, if the number of spatial motion prediction candidates in the merge list is less than the maximum number of spatial motion prediction candidates, this spatial motion prediction candidate (block A0) is included in the merge list (824).

[00142] If the spatial motion prediction candidate is the block B2, this spatial motion prediction candidate is not included in the merge list if the maximum number of spatial motion prediction candidates is four and the other blocks A0, A1, B0, and B1 are all decided to be included in the merge list (820). Otherwise, if the number of spatial motion prediction candidates in the merge list is less than the maximum number of spatial motion prediction candidates, the block B2 is not included in the merge list if the block B2 has the same motion information than the block B1 or the block A1 (822).

[00143] Then, after processing the blocks A1, B1, B0, A0 and B2 and including a subset of them in the merge list based on the above described conditions, no more redundancy check

Nokia Exhibit 2004, p. 63
Amazon.com v. Nokia
IPR2024-00605

between these candidates are performed and remaining temporal motion prediction candidate and/or other possible additional candidates may be processed.

[00144] When the merge list has been constructed the decoder may use 828 the indication of the motion vector received from the encoder to select the motion vector for decoding the current block. The indication may be, for example, an index to the merge list.

[00145] Basically, after the reconstruction processor 791 has constructed the merge list, it would correspond with the merge list constructed by the encoder if the reconstruction processor 791 has the same information available than the encoder had. If some information has been lost during transmission the information from the encoder to the decoder, it may affect the generation of the merge list in the decoder 700.

[00146] The above examples describe the operation mainly in the merge mode but the encoder and decoder may also operate in other modes.

[00147] The embodiments of the invention described above describe the codec in terms of separate encoder and decoder apparatus in order to assist the understanding of the processes involved. However, it would be appreciated that the apparatus, structures and operations may be implemented as a single encoder-decoder apparatus/structure/operation. Furthermore in some embodiments of the invention the coder and decoder may share some or all common elements.

[00148] Although the above examples describe embodiments of the invention operating within a codec within an electronic device, it would be appreciated that the invention as described below may be implemented as part of any video codec. Thus, for example, embodiments of the invention may be implemented in a video codec which may implement video coding over fixed or wired communication paths.

[00149] Thus, user equipment may comprise a video codec such as those described in embodiments of the invention above.

[00150] It shall be appreciated that the term user equipment is intended to cover any suitable type of wireless user equipment, such as mobile telephones, portable data processing devices or portable web browsers.

[00151] Furthermore elements of a public land mobile network (PLMN) may also comprise video codecs as described above.

[00152] In general, the various embodiments of the invention may be implemented in hardware or special purpose circuits, software, logic or any combination thereof. For example,

Nokia Exhibit 2004, p. 64
Amazon.com v. Nokia
IPR2024-00605

some aspects may be implemented in hardware, while other aspects may be implemented in firmware or software which may be executed by a controller, microprocessor or other computing device, although the invention is not limited thereto. While various aspects of the invention may be illustrated and described as block diagrams, flow charts, or using some other pictorial representation, it is well understood that these blocks, apparatus, systems, techniques or methods described herein may be implemented in, as non-limiting examples, hardware, software, firmware, special purpose circuits or logic, general purpose hardware or controller or other computing devices, or some combination thereof.

[00153] The embodiments of this invention may be implemented by computer software executable by a data processor of the mobile device, such as in the processor entity, or by hardware, or by a combination of software and hardware. Further in this regard it should be noted that any blocks of the logic flow as in the Figures may represent program steps, or interconnected logic circuits, blocks and functions, or a combination of program steps and logic circuits, blocks and functions. The software may be stored on such physical media as memory chips, or memory blocks implemented within the processor, magnetic media such as hard disk or floppy disks, and optical media such as for example DVD and the data variants thereof, CD.

[00154] The memory may be of any type suitable to the local technical environment and may be implemented using any suitable data storage technology, such as semiconductor based memory devices, magnetic memory devices and systems, optical memory devices and systems, fixed memory and removable memory. The data processors may be of any type suitable to the local technical environment, and may include one or more of general purpose computers, special purpose computers, microprocessors, digital signal processors (DSPs) and processors based on multi core processor architecture, as non limiting examples.

[00155] Embodiments of the inventions may be practiced in various components such as integrated circuit modules. The design of integrated circuits is by and large a highly automated process. Complex and powerful software tools are available for converting a logic level design into a semiconductor circuit design ready to be etched and formed on a semiconductor substrate.

[00156] Programs, such as those provided by Synopsys, Inc. of Mountain View, California and Cadence Design, of San Jose, California automatically route conductors and locate components on a semiconductor chip using well established rules of design as well as libraries of pre stored design modules. Once the design for a semiconductor circuit has been completed, the

Nokia Exhibit 2004, p. 65
Amazon.com v. Nokia
IPR2024-00605

resultant design, in a standardized electronic format (e.g., Opus, GDSII, or the like) may be transmitted to a semiconductor fabrication facility or "fab" for fabrication.

[00157] The foregoing description has provided by way of exemplary and non-limiting examples a full and informative description of the exemplary embodiment of this invention. However, various modifications and adaptations may become apparent to those skilled in the relevant arts in view of the foregoing description, when read in conjunction with the accompanying drawings and the appended claims. However, all such and similar modifications of the teachings of this invention will still fall within the scope of this invention.

[00158] In the following some examples will be provided.

[00159] In some embodiments a method comprises:

receiving a block of pixels including a prediction unit; determining a set of spatial motion vector prediction candidates for the block of pixels; the spatial motion vector prediction candidates being provided with motion information;

selecting a first spatial motion vector prediction candidate from the set of spatial motion vector prediction candidates as a potential spatial motion vector prediction candidate to be included in a merge list for the prediction unit;

determining a subset of spatial motion vector predictions based on the location of the block associated with the first spatial motion vector prediction candidate;

comparing motion information of the first spatial motion vector prediction candidate with motion information of the spatial motion vector prediction candidate in the determined subset of spatial motion vector prediction candidates;

if at least one of the comparisons indicates that the motion vector information of the spatial motion vector prediction candidates correspond with each other, excluding the first spatial motion vector prediction candidate from the merge list.

[00160] In some embodiments the method comprises including neighbouring blocks of the received block of pixels in the set of spatial motion vector prediction candidates.

[00161] In some embodiments the method comprises constructing the set of spatial motion vector predictions by using motion vectors of one or more encoded blocks in a same frame than the block of pixels.

Nokia Exhibit 2004, p. 66
Amazon.com v. Nokia
IPR2024-00605

[00162] In some embodiments the method comprises selecting spatial motion vector prediction candidates from the set of spatial motion vector prediction candidates as the potential spatial motion vector prediction candidate in a predetermined order.

[00163] In some embodiments the method comprises comparing motion information of the potential spatial motion vector prediction candidate with motion information of at most one other spatial motion vector prediction candidate of the set of spatial motion vector prediction candidates.

[00164] In some embodiments the method comprises prediction unit and a second prediction unit; and if so, excluding the potential spatial motion vector prediction candidate from the merge list if the prediction unit is the second prediction unit.

[00165] In some embodiments the method comprises

determining a maximum number of spatial motion vector prediction candidates to be included in a merge list; and

limiting the number of spatial motion vector prediction candidates in the merge list smaller or equal to the maximum number .

[00166] In some embodiments the method comprises

examining, if the number of spatial motion vector prediction candidates in the merge list smaller than the maximum number;

if so, examining whether a prediction unit to which the potential spatial motion vector prediction candidate belongs is available for motion prediction;

if so, performing at least one of the following:

for the potential spatial motion vector prediction candidate on the left side of the prediction unit, excluding the potential spatial motion vector prediction candidate from the merge list if any of the following conditions are fulfilled:

– the received block of pixels is vertically divided into a first prediction unit and a second prediction unit, and the prediction unit is the second prediction unit;

– the received block of pixels is horizontally divided into a first prediction unit and a second prediction unit, and if the prediction unit is the second prediction unit, and the potential spatial motion vector prediction candidate has essentially similar motion information than the spatial motion vector prediction candidate above the prediction unit;

Nokia Exhibit 2004, p. 67
Amazon.com v. Nokia
IPR2024-00605

for the potential spatial motion vector prediction candidate above the prediction unit, excluding the potential spatial motion vector prediction candidate from the merge list if any of the following conditions are fulfilled:

– the received block of pixels is horizontally divided into a first prediction unit and a second prediction unit, and the prediction unit is the second prediction unit;

– the potential spatial motion vector prediction candidate has essentially similar motion information than the spatial motion vector prediction candidate on the left side of the prediction unit;

for the potential spatial motion vector prediction candidate, which is on the right side of the potential spatial motion vector prediction candidate above the prediction unit, excluding the potential spatial motion vector prediction candidate from the merge list if the potential spatial motion vector prediction candidate has essentially similar motion information than the spatial motion vector prediction candidate above the prediction unit;

for the potential spatial motion vector prediction candidate, which is below the potential spatial motion vector prediction candidate on the left side of the prediction unit, excluding the potential spatial motion vector prediction candidate from the merge list if the potential spatial motion vector prediction candidate has essentially similar motion information than the spatial motion vector prediction candidate on the left side of the prediction unit;

for the potential spatial motion vector prediction candidate cornerwise neighbouring the prediction unit, excluding the potential spatial motion vector prediction candidate from the merge list if any of the following conditions are fulfilled:

– all the other potential spatial motion vector prediction candidates have been included in the merge list;

– the potential spatial motion vector prediction candidate has essentially similar motion information than the spatial motion vector prediction candidate above the prediction unit;

– the potential spatial motion vector prediction candidate has essentially similar motion information than the spatial motion vector prediction candidate on the left side of the prediction unit.

[00167] In some embodiments the method comprises including a temporal motion prediction candidate into the merge list.

Nokia Exhibit 2004, p. 68
Amazon.com v. Nokia
IPR2024-00605

[00168] In some embodiments the method comprises selecting one motion vector prediction candidate from the merge list to represent a motion vector prediction for the block of pixels.

[00169] In some embodiments a method according to the second aspect comprises:

receiving an encoded block of pixels including a prediction unit;

determining a set of spatial motion vector prediction candidates for the encoded block of pixels; the spatial motion vector prediction candidates being provided with motion information;

selecting a first spatial motion vector prediction candidate from the set of spatial motion vector prediction candidates as a potential spatial motion vector prediction candidate to be included in a merge list for the prediction unit;

determining a subset of spatial motion vector predictions based on the location of the block associated with the first spatial motion vector prediction candidate;

comparing motion information of the first spatial motion vector prediction candidate with motion information of another spatial motion vector prediction candidate of the set of spatial motion vector prediction candidates;

if at least one of the comparisons indicates that the motion vector information of the spatial motion vector prediction candidates correspond with each other, excluding the first spatial motion vector prediction candidate from the merge list.

[00170] In some embodiments the method comprises including neighbouring blocks of the received encoded block of pixels in the set of spatial motion vector prediction candidates.

[00171] In some embodiments the method comprises constructing the set of spatial motion vector predictions by using motion vectors of one or more decoded blocks in a same frame than the received encoded block of pixels.

[00172] In some embodiments the method comprises selecting spatial motion vector prediction candidates from the set of spatial motion vector prediction candidates as the potential spatial motion vector prediction candidate in a predetermined order.

[00173] In some embodiments the method comprises comparing motion information of the potential spatial motion vector prediction candidate with motion information of at most one other spatial motion vector prediction candidate of the set of spatial motion vector prediction candidates.

Nokia Exhibit 2004, p. 69
Amazon.com v. Nokia
IPR2024-00605

[00174] In some embodiments the method comprises examining whether the received encoded block of pixels is divided into a first prediction unit and a second prediction unit; and if so, excluding the potential spatial motion vector prediction candidate from the merge list if the prediction unit is the second prediction unit.

[00175] In some embodiments the method comprises

determining a maximum number of spatial motion vector prediction candidates to be included in a merge list; and

limiting the number of spatial motion vector prediction candidates in the merge list smaller or equal to the maximum number.

[00176] In some embodiments the method comprises

examining, if the number of spatial motion vector prediction candidates in the merge list smaller than the maximum number;

if so, examining whether a prediction unit to which the potential spatial motion vector prediction candidate belongs is available for motion prediction;

if so, performing at least one of the following:

for the potential spatial motion vector prediction candidate on the left side of the prediction unit, excluding the potential spatial motion vector prediction candidate from the merge list if any of the following conditions are fulfilled:

– the received encoded block of pixels is vertically divided into a first prediction unit and a second prediction unit, and the prediction unit is the second prediction unit;

– the received encoded block of pixels is horizontally divided into a first prediction unit and a second prediction unit, and if the prediction unit is the second prediction unit, and the potential spatial motion vector prediction candidate has essentially similar motion information than the spatial motion vector prediction candidate above the prediction unit;

for the potential spatial motion vector prediction candidate above the prediction unit, excluding the potential spatial motion vector prediction candidate from the merge list if any of the following conditions are fulfilled:

– the received encoded block of pixels is horizontally divided into a first prediction unit and a second prediction unit, and the prediction unit is the second prediction unit;

Nokia Exhibit 2004, p. 70
Amazon.com v. Nokia
IPR2024-00605

– the potential spatial motion vector prediction candidate has essentially similar motion information than the spatial motion vector prediction candidate on the left side of the prediction unit;

for the potential spatial motion vector prediction candidate, which is on the right side of the potential spatial motion vector prediction candidate above the prediction unit, excluding the potential spatial motion vector prediction candidate from the merge list if the potential spatial motion vector prediction candidate has essentially similar motion information than the spatial motion vector prediction candidate above the prediction unit;

for the potential spatial motion vector prediction candidate, which is below the potential spatial motion vector prediction candidate on the left side of the prediction unit, excluding the potential spatial motion vector prediction candidate from the merge list if the potential spatial motion vector prediction candidate has essentially similar motion information than the spatial motion vector prediction candidate on the left side of the prediction unit;

for the potential spatial motion vector prediction candidate cornerwise neighbouring the prediction unit, excluding the potential spatial motion vector prediction candidate from the merge list if any of the following conditions are fulfilled:

– all the other potential spatial motion vector prediction candidates have been included in the merge list;

– the potential spatial motion vector prediction candidate has essentially similar motion information than the spatial motion vector prediction candidate above the prediction unit;

– the potential spatial motion vector prediction candidate has essentially similar motion information than the spatial motion vector prediction candidate on the left side of the prediction unit.

[00177] In some embodiments the method comprises including a temporal motion prediction candidate into the merge list.

[00178] In some embodiments the method comprises selecting one motion vector prediction candidate from the merge list to represent a motion vector prediction for the received encoded block of pixels.

[00179] In some embodiments an apparatus according to the third aspect comprises a processor and a memory including computer program code, the memory and the computer program code configured to, with the processor, cause the apparatus to:

Nokia Exhibit 2004, p. 71
Amazon.com v. Nokia
IPR2024-00605

receive a block of pixels

including a prediction unit;

determining a set of spatial motion vector prediction candidates for the block of pixels; the spatial motion vector prediction candidates being provided with motion information;

selecting a first spatial motion vector prediction candidate from the set of spatial motion vector prediction candidates as a potential spatial motion vector prediction candidate to be included in a merge list for the prediction unit;

determining a subset of spatial motion vector predictions based on the location of the block associated with the first spatial motion vector prediction candidate;

comparing motion information of the first spatial motion vector prediction candidate with motion information of the spatial motion vector prediction candidate in the determined subset of spatial motion vector prediction candidates;

if at least one the comparisons indicates that the motion vector information of the spatial motion vector prediction candidates correspond with each other, excluding the first spatial motion vector prediction candidate from the merge list.

[00180] In some embodiments an apparatus according to the fourth aspect comprises a processor and a memory including computer program code, the memory and the computer program code configured to, with the processor, cause the apparatus to:

receive an encoded block of pixels including a prediction unit;

determine a set of spatial motion vector prediction candidates for the encoded block of pixels; the spatial motion vector prediction candidates being provided with motion information;

select a first spatial motion vector prediction candidate from the set of spatial motion vector prediction candidates as a potential spatial motion vector prediction candidate to be included in a merge list for the prediction unit;

determine a subset of spatial motion vector predictions based on the location of the block associated with the first spatial motion vector prediction candidate;

compare motion information of the first spatial motion vector prediction candidate with motion information of the spatial motion vector prediction candidate in the determined subset of spatial motion vector prediction candidates;

Nokia Exhibit 2004, p. 72
Amazon.com v. Nokia
IPR2024-00605

exclude the first spatial motion vector prediction candidate from the merge list, if at least one of the comparisons indicates that the motion vector information of the spatial motion vector prediction candidates correspond with each other

[00181] In some embodiments a storage medium having stored thereon a computer program code a computer executable program code for use by an encoder, said program codes comprise instructions for use by an encoder, said program code comprises instructions for:

receiving a block of pixels including a prediction unit;

determining a set of spatial motion vector prediction candidates for the block of pixels; the spatial motion vector prediction candidates being provided with motion information;

selecting a first spatial motion vector prediction candidate from the set of spatial motion vector prediction candidates as a potential spatial motion vector prediction candidate to be included in a merge list for the prediction unit;

determining a subset of spatial motion vector predictions based on the location of the block associated with the first spatial motion vector prediction candidate;

comparing motion information of the first spatial motion vector prediction candidate with motion information of the spatial motion vector prediction candidate in the determined subset of spatial motion vector prediction candidates;

if at least one of the comparisons indicates that the motion vector information of the spatial motion vector prediction candidates correspond with each other, excluding the first spatial motion vector prediction candidate from the merge list.

[00182] In some embodiments a storage medium having stored thereon a computer program code a computer executable program code for use by an encoder, said program codes comprise instructions for use by an encoder, said program code comprises instructions for:

receiving an encoded block of pixels including a prediction unit;

determining a set of spatial motion vector prediction candidates for the encoded block of pixels; the spatial motion vector prediction candidates being provided with motion information;

selecting a first spatial motion vector prediction candidate from the set of spatial motion vector prediction candidates as a potential spatial motion vector prediction candidate to be included in a merge list for the prediction unit;

Nokia Exhibit 2004, p. 73
Amazon.com v. Nokia
IPR2024-00605

determining a subset of spatial motion vector predictions based on the location of the block associated with the first spatial motion vector prediction candidate;

comparing motion information of the first spatial motion vector prediction candidate with motion information of the spatial motion vector prediction candidate in the determined subset of spatial motion vector prediction candidates;

if at least one of the comparisons indicates that the motion vector information of the spatial motion vector prediction candidates correspond with each other, excluding the first spatial motion vector prediction candidate from the merge list.

[00183] In some embodiments an apparatus comprises:

means for receiving a block of pixels including a prediction unit;

means for selecting a first spatial motion vector prediction candidate from the set of spatial motion vector prediction candidates as a potential spatial motion vector prediction candidate to be included in a merge list for the prediction unit;

means for determining a subset of spatial motion vector predictions based on the location of the block associated with the first spatial motion vector prediction candidate;

means for comparing motion information of the first spatial motion vector prediction candidate with motion information of the spatial motion vector prediction candidate in the determined subset of spatial motion vector prediction candidates;

means for excluding the first spatial motion vector prediction candidate from the merge list, if at least one of the comparisons indicates that the motion vector information of the spatial motion vector prediction candidates correspond with each other.

[00184] In some embodiments an apparatus comprises:

means for receiving an encoded block of pixels including a prediction unit;

means for determining a set of spatial motion vector prediction candidates for the encoded block of pixels; the spatial motion vector prediction candidates being provided with motion information;

means for selecting a first spatial motion vector prediction candidate from the set of spatial motion vector prediction candidates as a potential spatial motion vector prediction candidate to be included in a merge list for the prediction unit;

means for determining a subset of spatial motion vector predictions based on the 58location of the block associated with the first spatial motion vector prediction candidate;

Nokia Exhibit 2004, p. 74
Amazon.com v. Nokia
IPR2024-00605

means for comparing motion information of the first spatial motion vector prediction candidate with motion information of the spatial motion vector prediction candidate in the determined subset of spatial motion vector prediction candidates;

means for excluding the first spatial motion vector prediction candidate from the merge list, if at least one of the comparisons indicates that the motion vector information of the spatial motion vector prediction candidates correspond with each other.

Nokia Exhibit 2004, p. 75
Amazon.com v. Nokia
IPR2024-00605

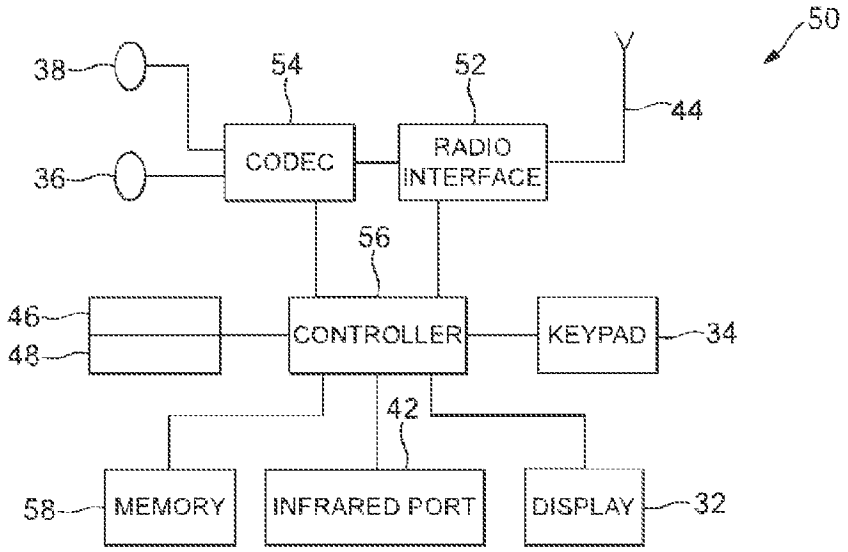
50
38
54
52
44
36
CODEC
RADIO INTERFACE
56
46
48
CONTROLLER
KEYPAD
34
42
58
MEMORY
INFRARED PORT
DISPLAY
32

FIG.1

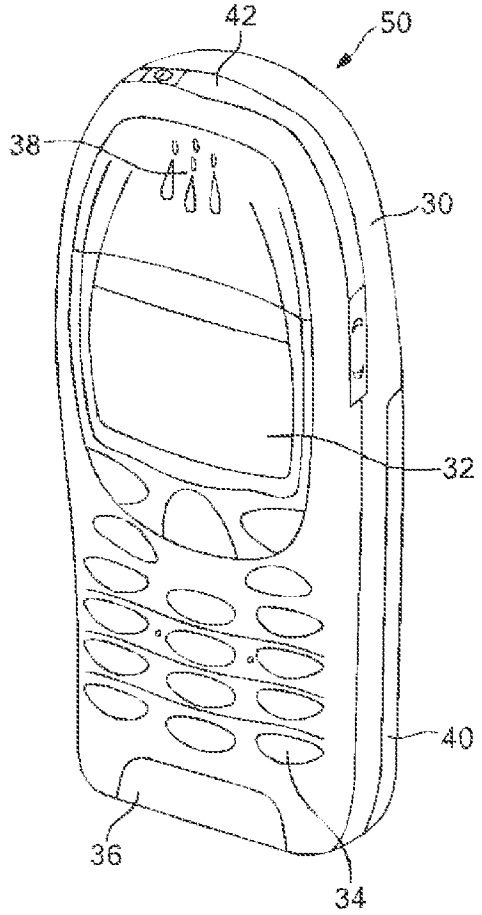
42
50
38
30
32
40
36
34

FIG. 2

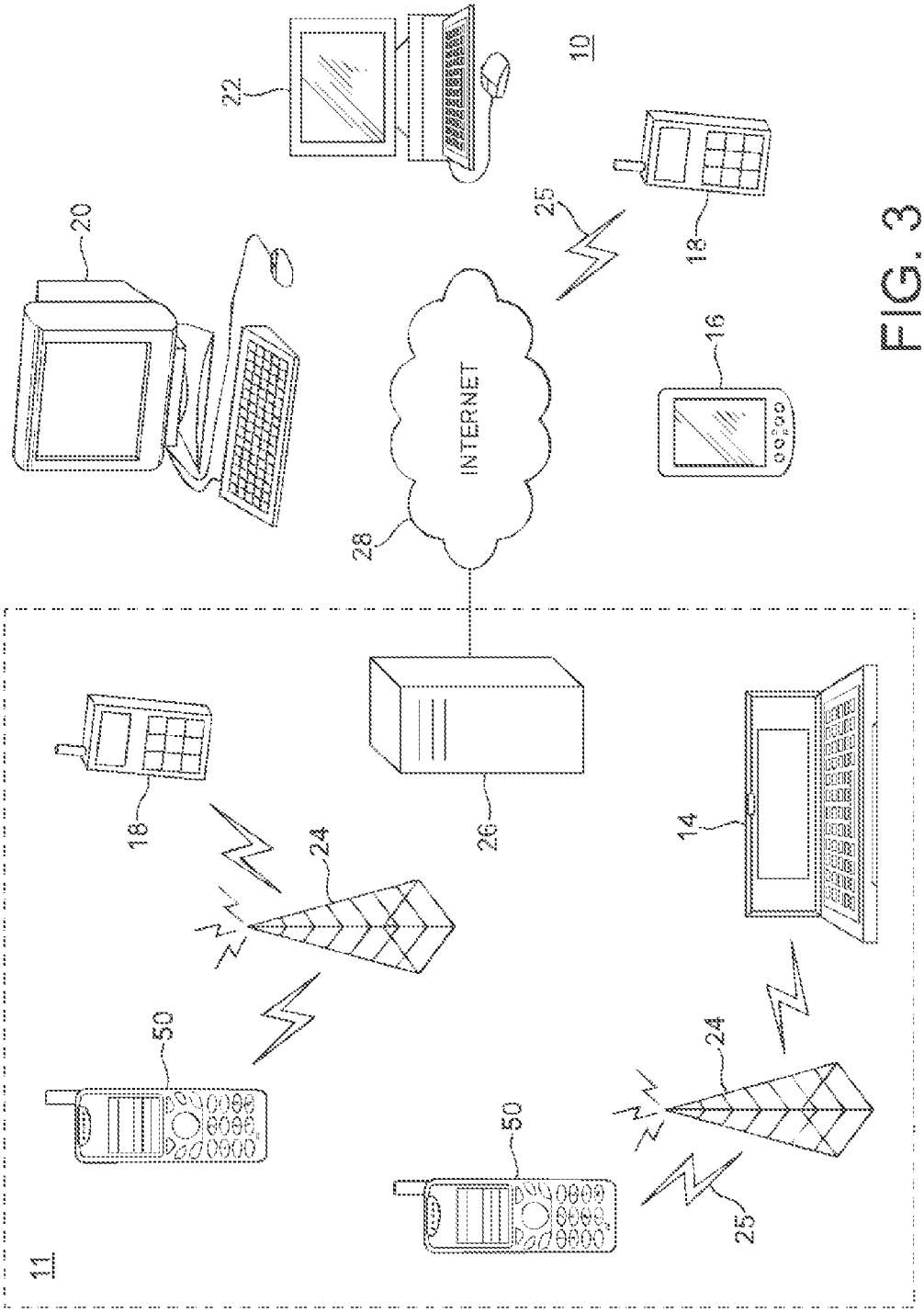

FIG. 3

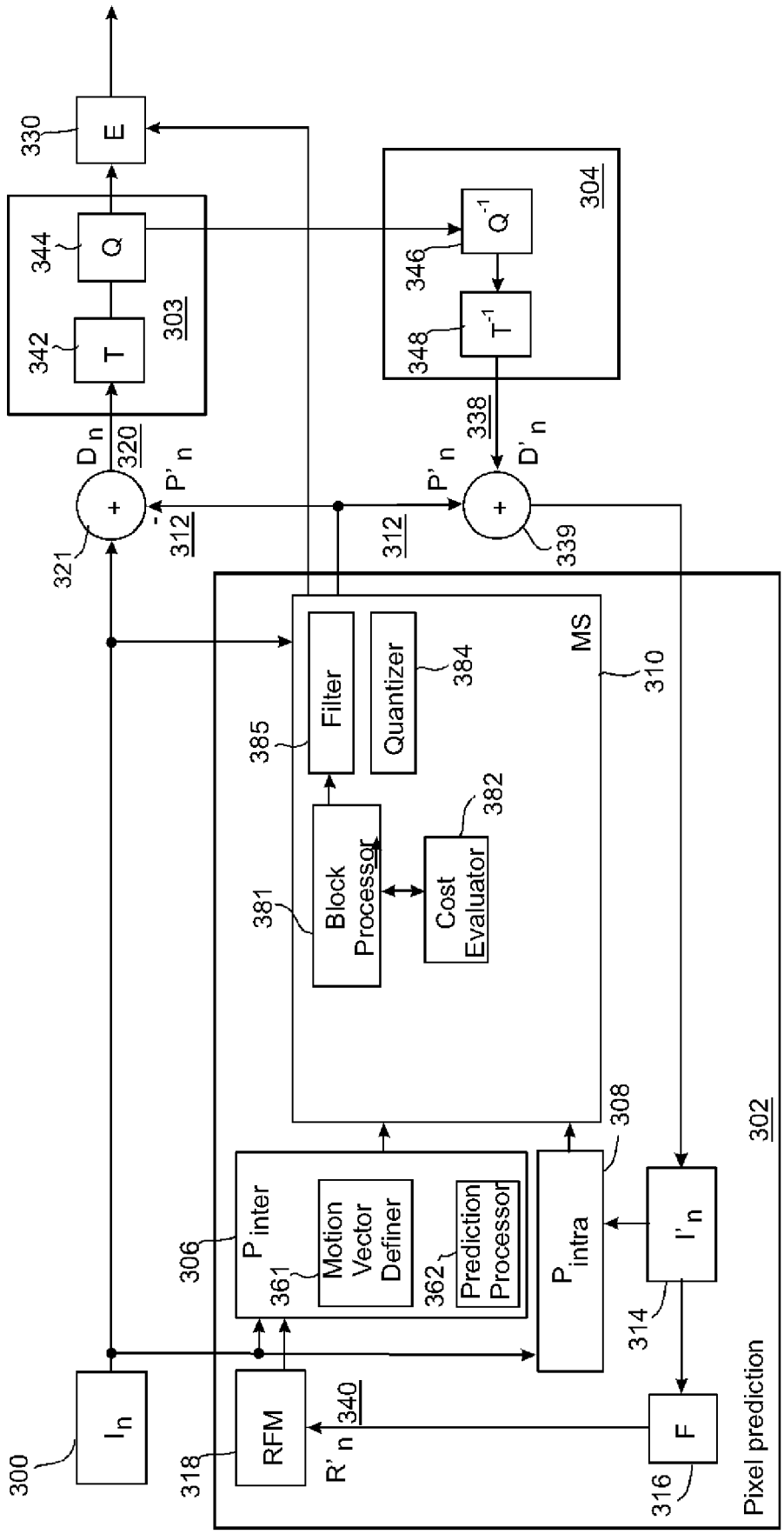
300
I_n
318
RFM
R' n
340
316
F
314
I'_n
306
P_{inter}
361
Motion Vector Definer
362
Prediction Processor
P_{intra}
308
302
Pixel prediction
381
Block Processor
382
Cost Evaluator
385
Filter
Quantizer
384
MS
310
321
312
D_n
320
P' n
342
T
344
Q
303
330
E
312
P' n
339
338
D' n
348
T^{-1}
346
Q^{-1}
304

Fig. 4a

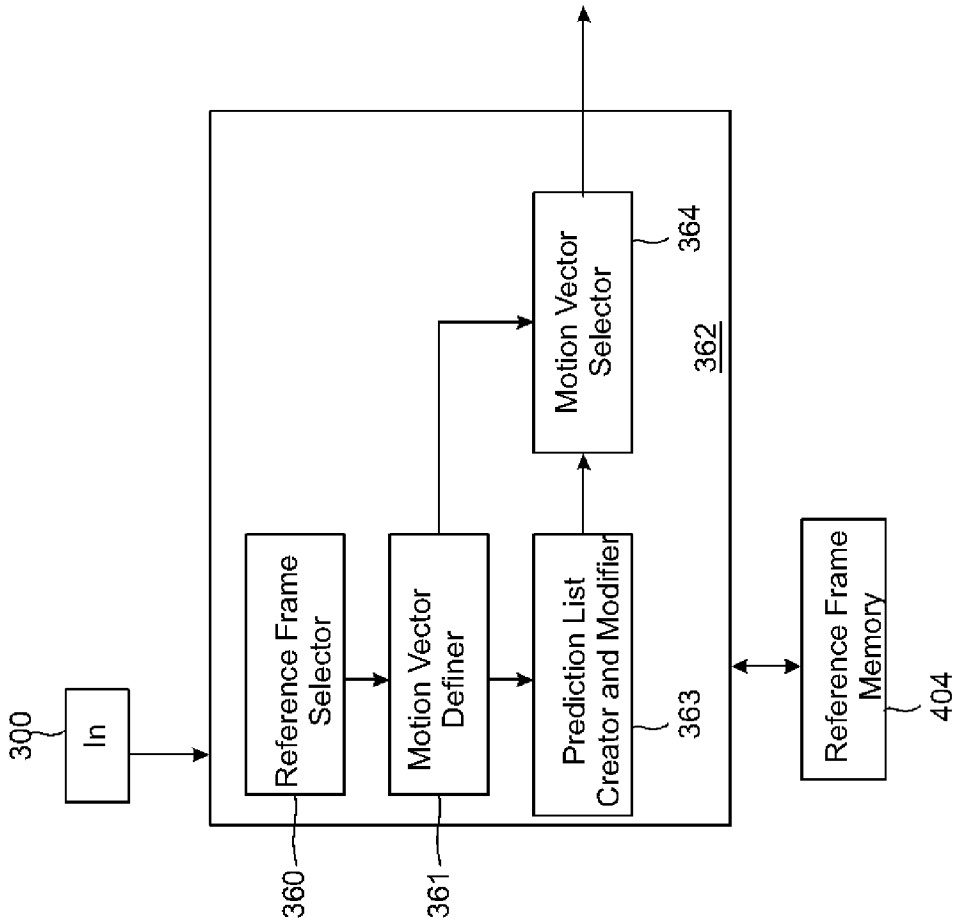
300
In
360
Reference Frame Selector
361
Motion Vector Definer
363
Prediction List Creator and Modifier
362
364
Motion Vector Selector
404
Reference Frame Memory

Fig. 4b

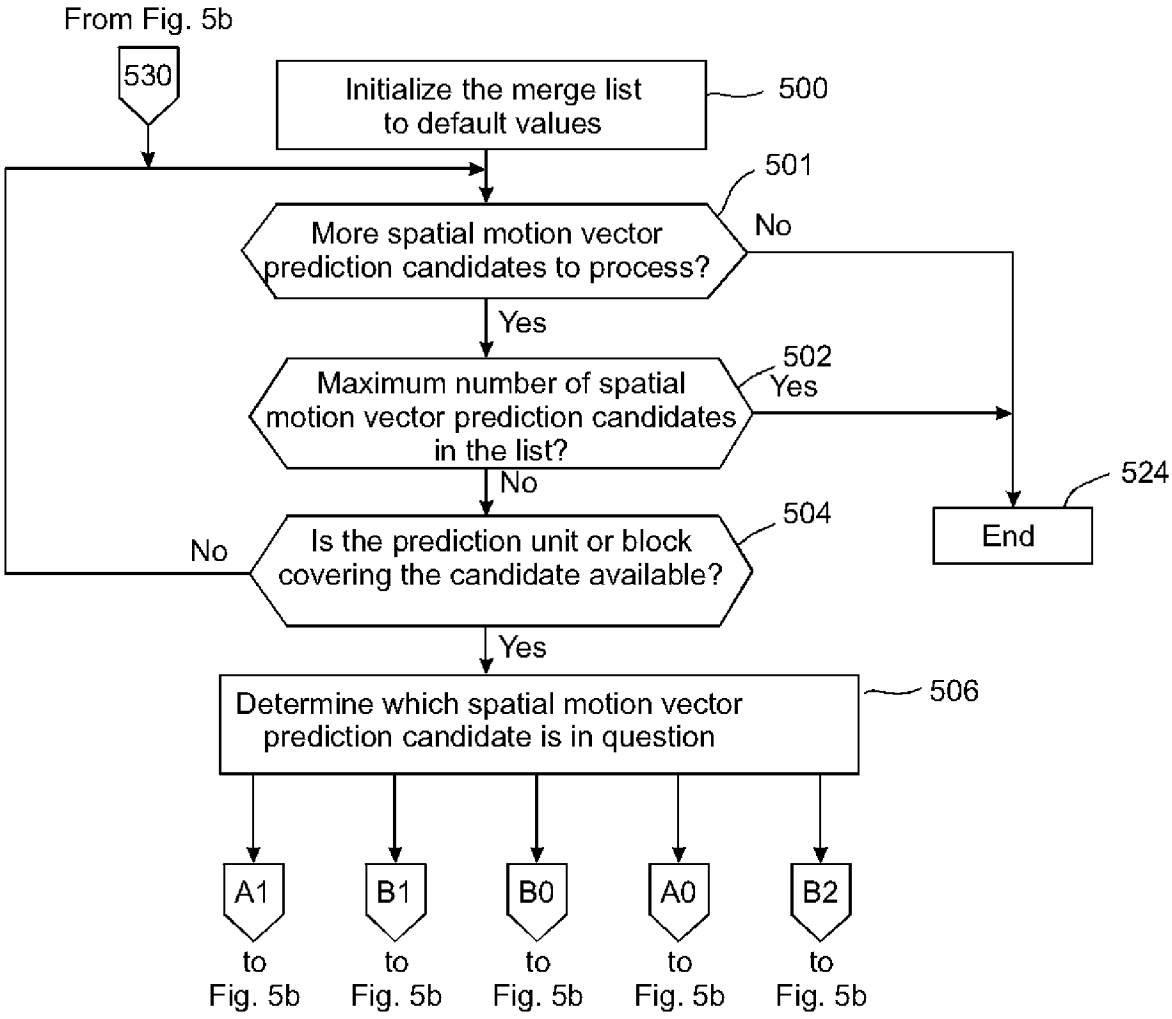
From Fig. 5b
530
Initialize the merge list to default values
500
501
More spatial motion vector prediction candidates to process?
No
Yes
502
Maximum number of spatial motion vector prediction candidates in the list?
Yes
No
524
End
504
Is the prediction unit or block covering the candidate available?
No
Yes
506
Determine which spatial motion vector prediction candidate is in question
A1
B1
B0
A0
B2
to Fig. 5b
to Fig. 5b
to Fig. 5b
to Fig. 5b
to Fig. 5b

Fig. 5a

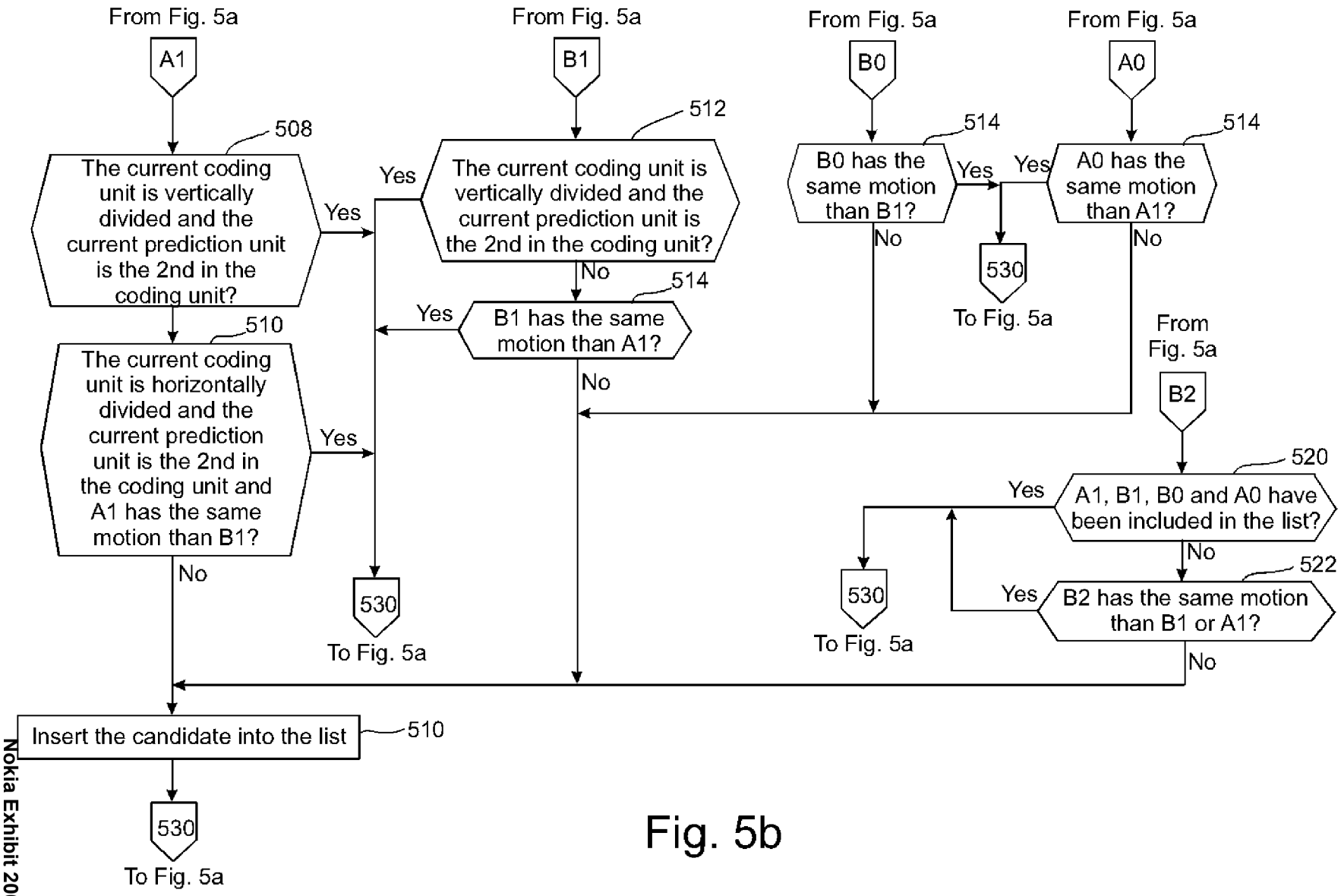

Fig. 5b

Nokia Exhibit 2004, p. 81
Amazon.com v. Nokia
IPR2024-00605

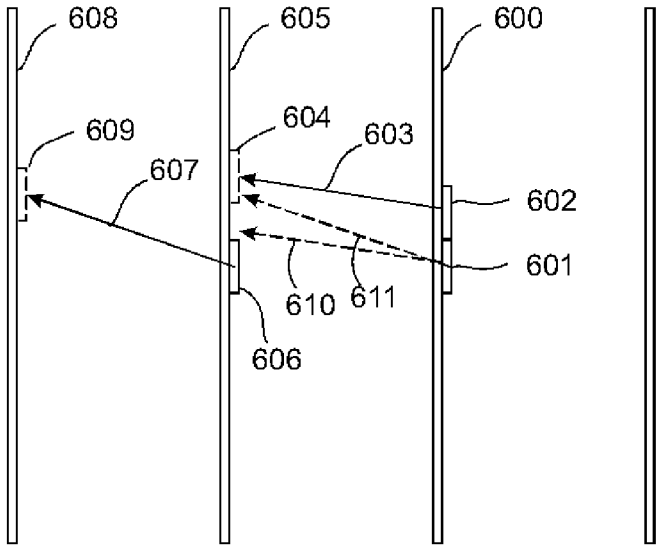
608
605
600
609
604
603
607
602
601
610
611
606

Fig. 6a

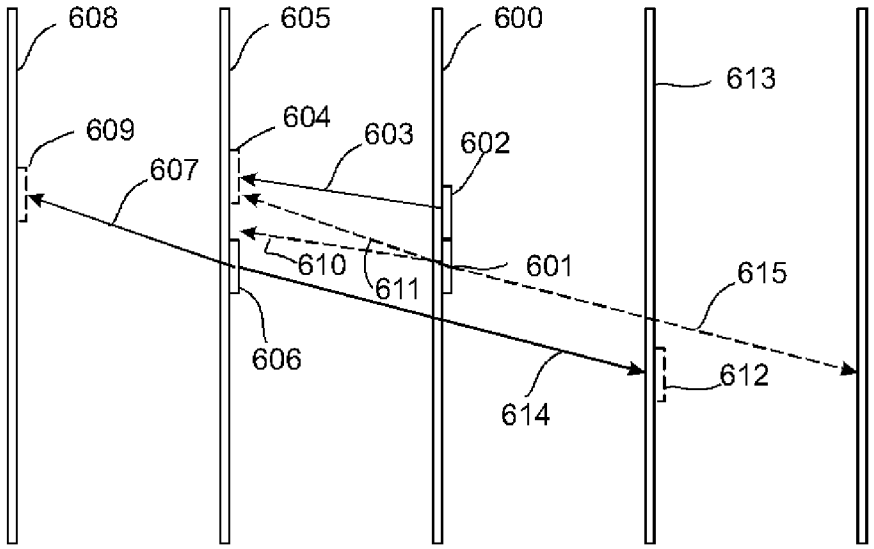
608
605
600
613
609
604
603
602
607
610
601
611
615
606
612
614

Fig. 6b

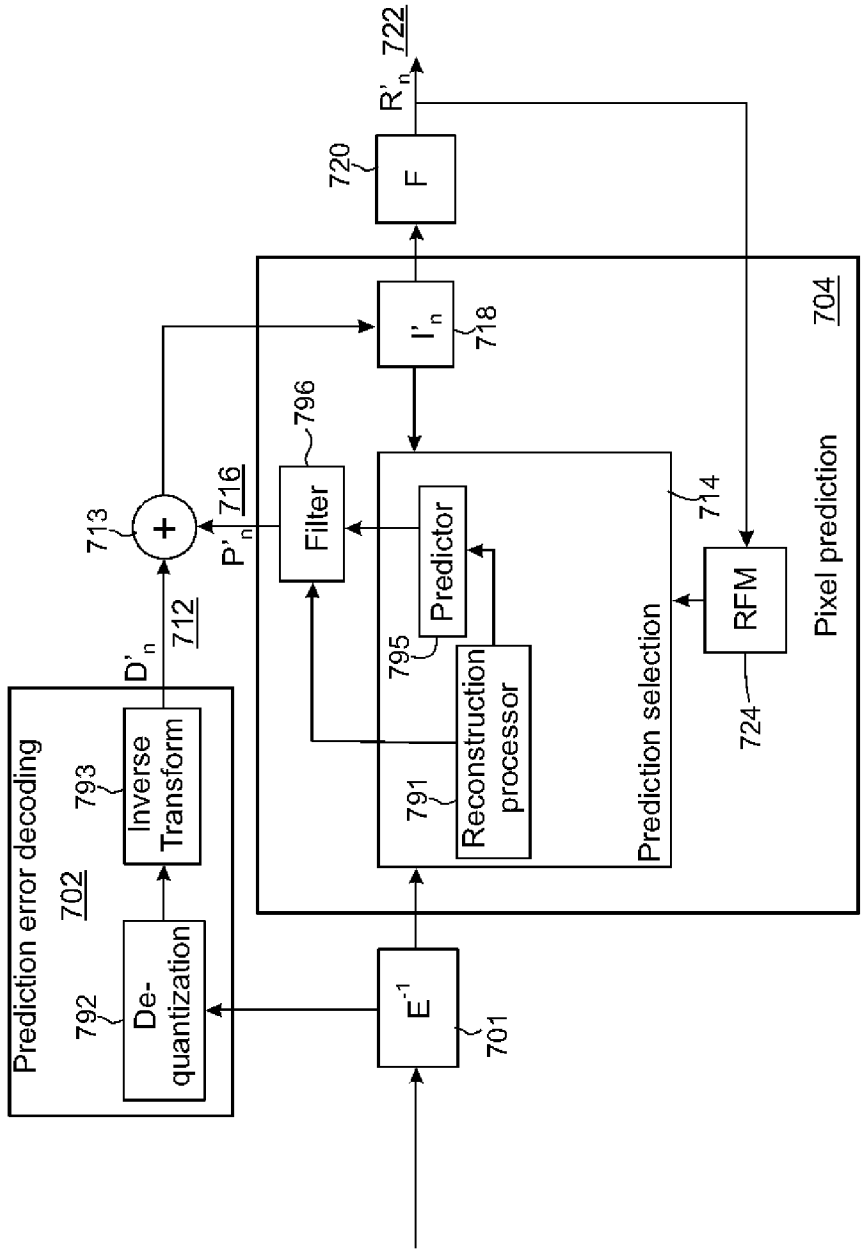
Prediction error decoding
702
792
De-quantization
793
Inverse Transform
D'n
712
713
+
P'n
716
Filter
796
E-1
701
I'n
718
F
720
R'n
722
Predictor
795
Reconstruction processor
791
Prediction selection
714
RFM
724
Pixel prediction
704

Fig. 7

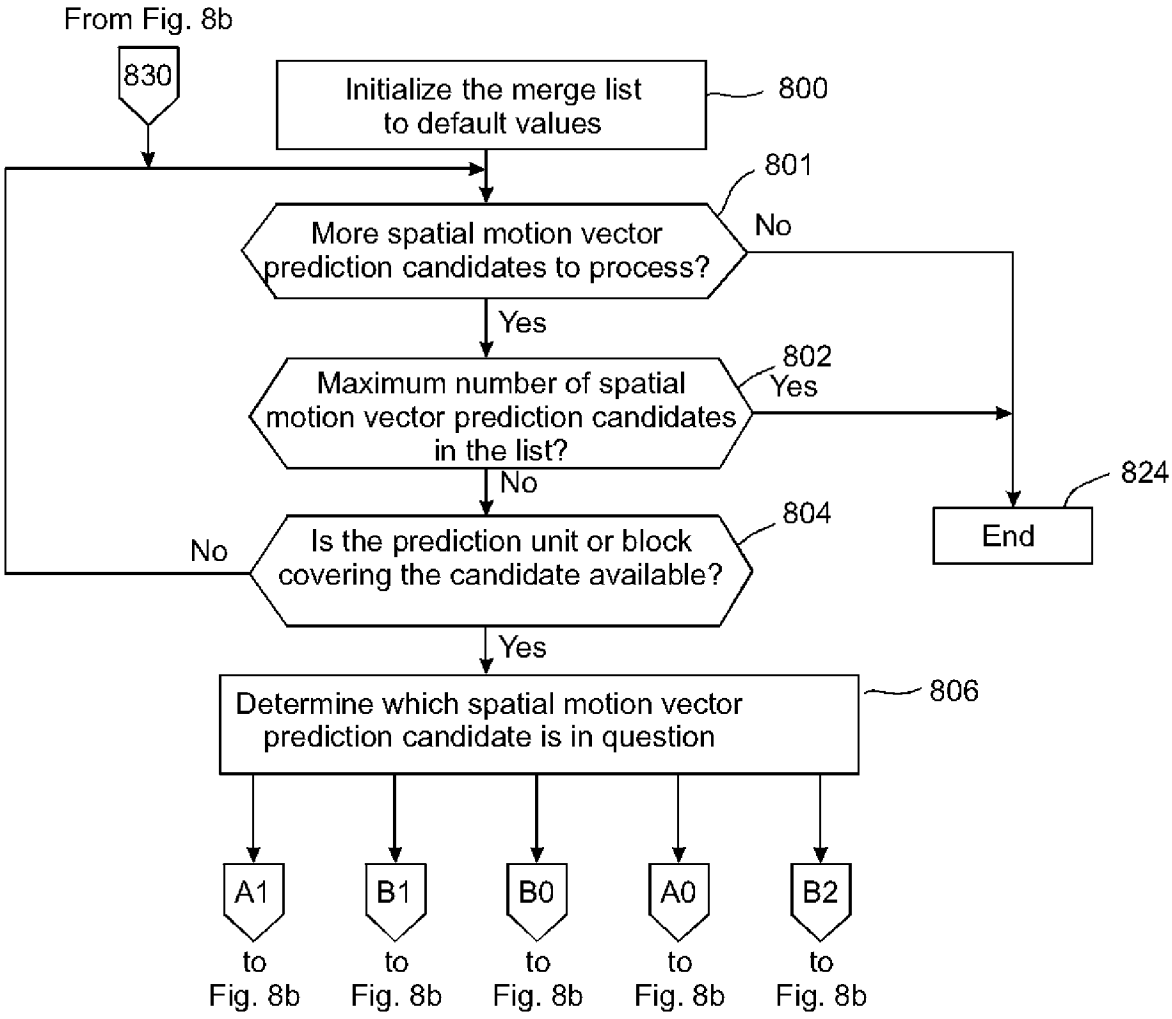
From Fig. 8b
830
Initialize the merge list to default values
800
801
More spatial motion vector prediction candidates to process?
No
Yes
802
Maximum number of spatial motion vector prediction candidates in the list?
Yes
No
824
End
804
Is the prediction unit or block covering the candidate available?
No
Yes
806
Determine which spatial motion vector prediction candidate is in question
A1
B1
B0
A0
B2
to Fig. 8b
to Fig. 8b
to Fig. 8b
to Fig. 8b
to Fig. 8b

Fig. 8a

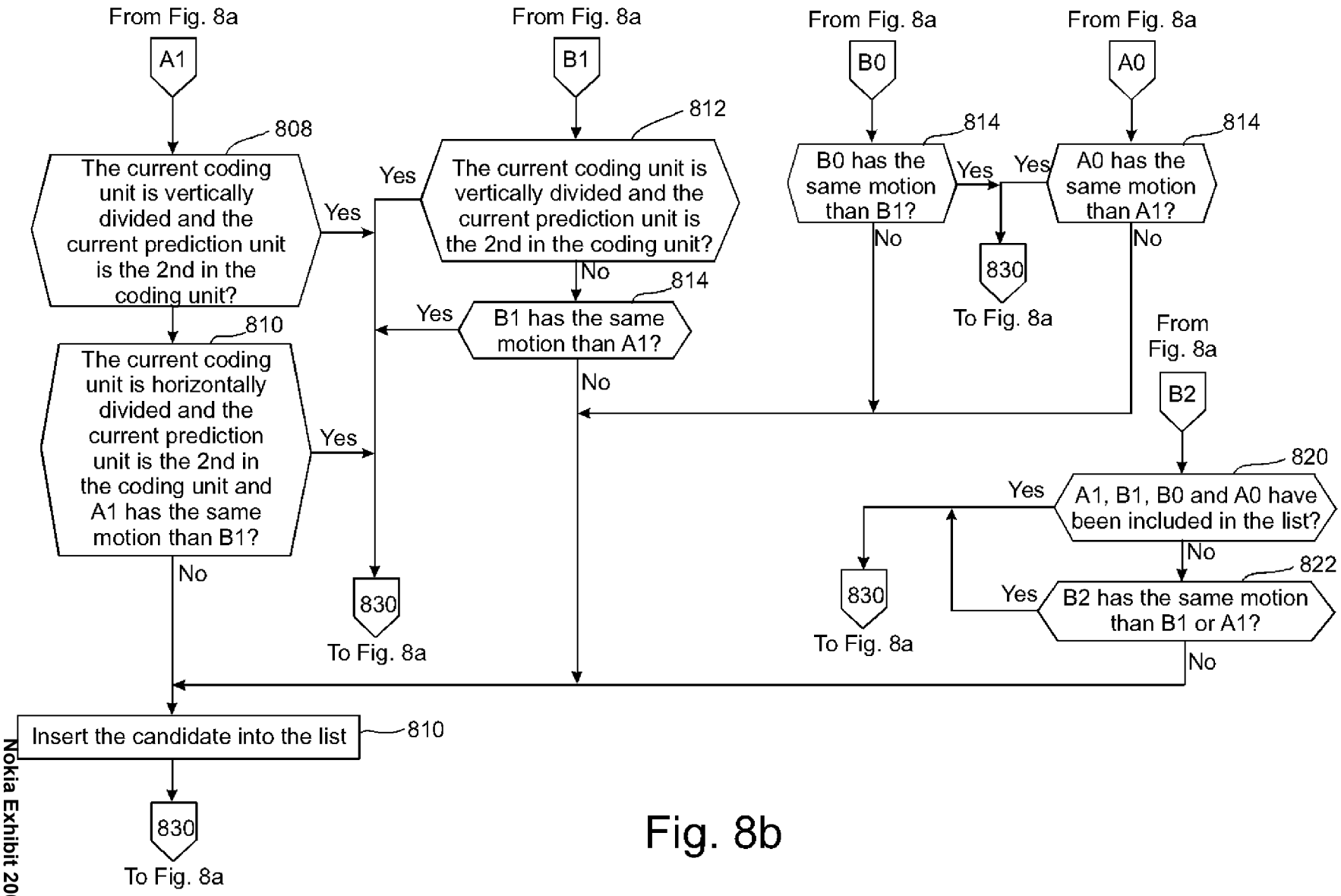

Fig. 8b

Nokia Exhibit 2004, p. 85
Amazon.com v. Nokia
IPR2024-00605

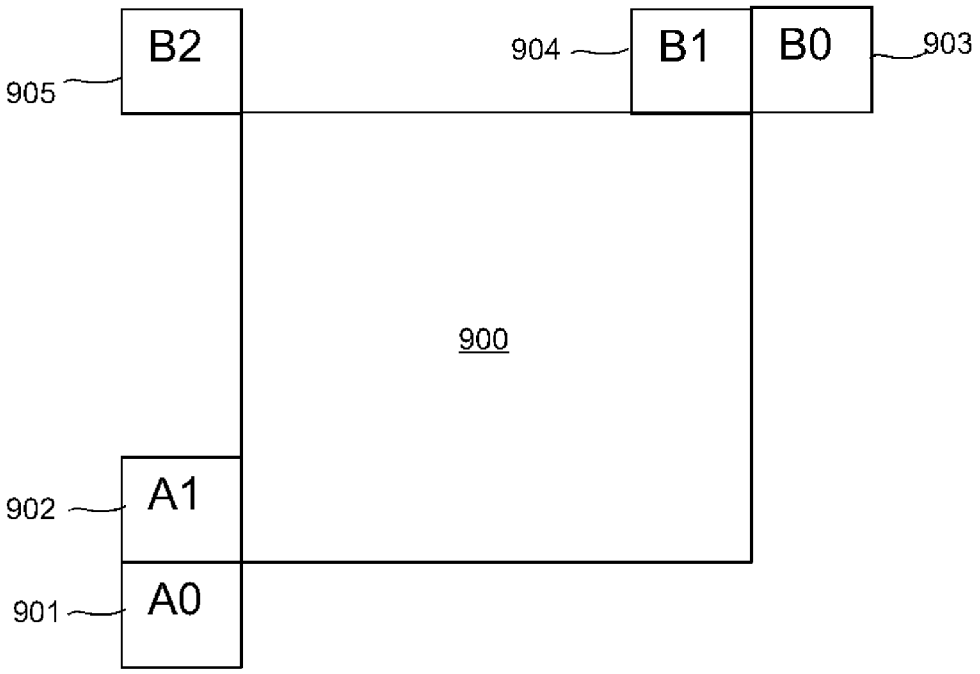

Fig. 9

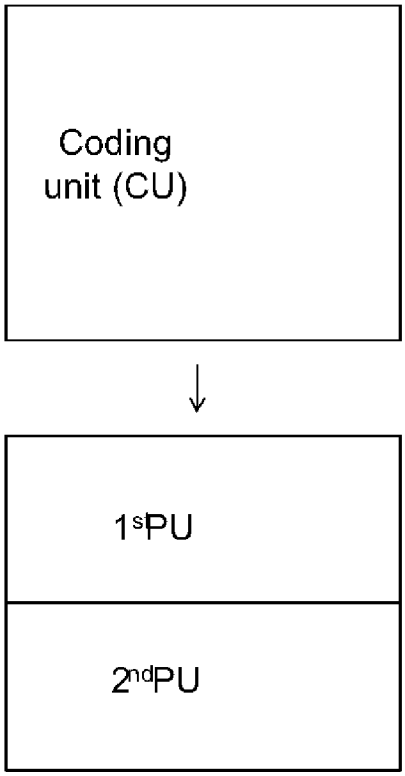

Fig. 10a

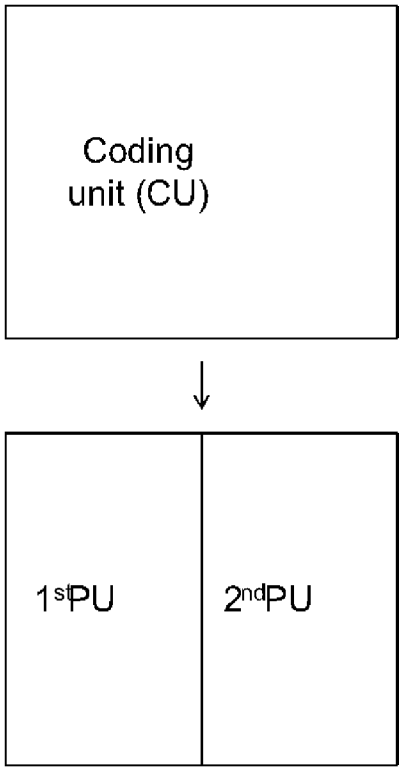

Fig. 10b

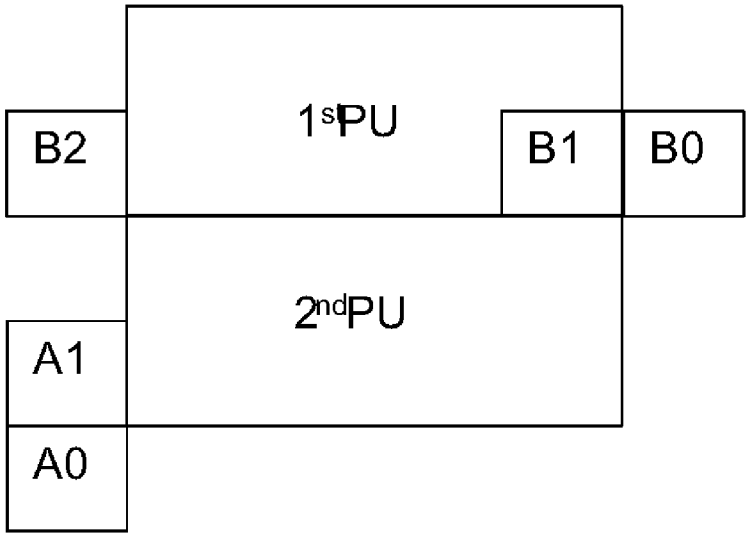

Fig. 11a

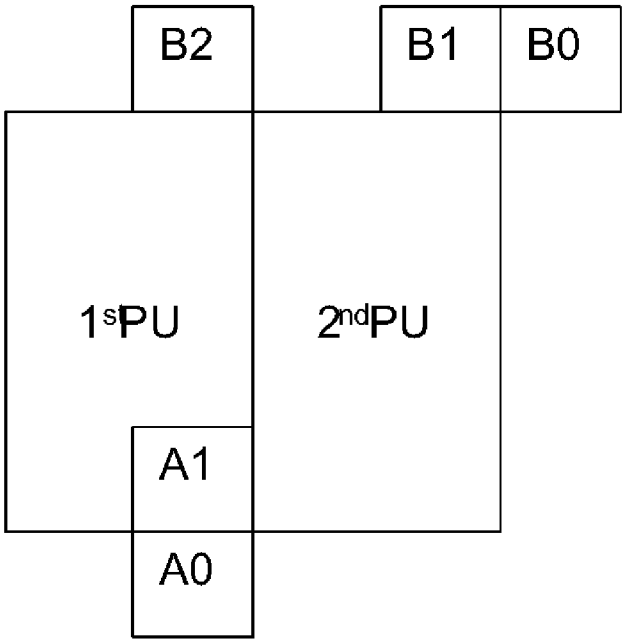

Fig. 11b

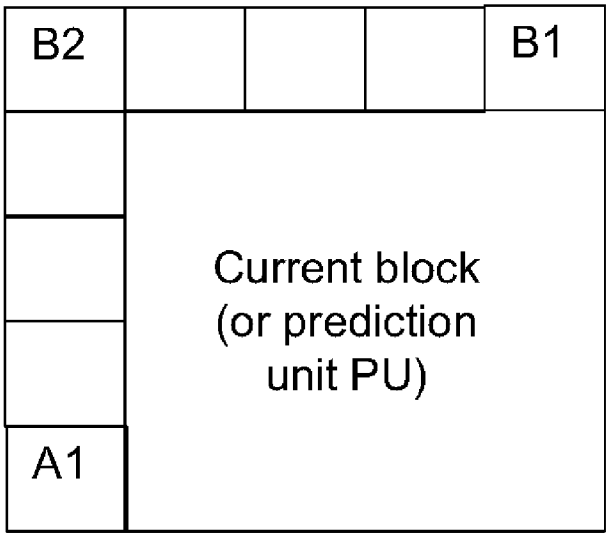

Fig. 12

PTO/AIA/01 (06-12)
Approved for use through 01/31/2014. OMB 0651-0032
U.S. Patent and Trademark Office; U.S. DEPARTMENT OF COMMERCE
Under the Paperwork Reduction Act of 1995, no persons are required to respond to a collection of information unless it displays a valid OMB control number.

DECLARATION (37 CFR 1.63) FOR UTILITY OR DESIGN APPLICATION USING AN APPLICATION DATA SHEET (37 CFR 1.76)

Title of Invention	METHOD FOR CODING AND AN APPARATUS

As the below named inventor, I hereby declare that:

This declaration is directed to:

☐ The attached application, or

☒ United States application or PCT international application number 13/666680

filed on November 1, 2012.

The above-identified application was made or authorized to be made by me.

I believe that I am the original inventor or an original joint inventor of a claimed invention in the application.

I hereby acknowledge that any willful false statement made in this declaration is punishable under 18 U.S.C. 1001 by fine or imprisonment of not more than five (5) years, or both.

WARNING:

Petitioner/applicant is cautioned to avoid submitting personal information in documents filed in a patent application that may contribute to identity theft. Personal information such as social security numbers, bank account numbers, or credit card numbers (other than a check or credit card authorization form PTO-2038 submitted for payment purposes) is never required by the USPTO to support a petition or an application. If this type of personal information is included in documents submitted to the USPTO, petitioners/applicants should consider redacting such personal information from the documents before submitting them to the USPTO. Petitioner/applicant is advised that the record of a patent application is available to the public after publication of the application (unless a non-publication request in compliance with 37 CFR 1.213(a) is made in the application) or issuance of a patent. Furthermore, the record from an abandoned application may also be available to the public if the application is referenced in a published application or an issued patent (see 37 CFR 1.14). Checks and credit card authorization forms PTO-2038 submitted for payment purposes are not retained in the application file and therefore are not publicly available.

LEGAL NAME OF INVENTOR

Inventor: Mehmet Oguz BICI Date (Optional): NOV - 05 - 2012

Signature: MOBici

Note: An application data sheet (PTO/SB/14 or equivalent), including naming the entire inventive entity, must accompany this form. Use an additional PTO/AIA/01 form for each additional inventor.

This collection of information is required by 35 U.S.C. 115 and 37 CFR 1.63. The information is required to obtain or retain a benefit by the public which is to file (and by the USPTO to process) an application. Confidentiality is governed by 35 U.S.C. 122 and 37 CFR 1.11 and 1.14. This collection is estimated to take 1 minute to complete, including gathering, preparing, and submitting the completed application form to the USPTO. Time will vary depending upon the individual case. Any comments on the amount of time you require to complete this form and/or suggestions for reducing this burden, should be sent to the Chief Information Officer, U.S. Patent and Trademark Office, U.S. Department of Commerce, P.O. Box 1450, Alexandria, VA 22313-1450. DO NOT SEND FEES OR COMPLETED FORMS TO THIS ADDRESS. **SEND TO: Commissioner for Patents, P.O. Box 1450, Alexandria, VA 22313-1450.**

If you need assistance in completing the form, call 1-800-PTO-9199 and select option 2.

PTO/AIA/01 (06-12)
Approved for use through 01/31/2014. OMB 0651-0032
U.S. Patent and Trademark Office; U.S. DEPARTMENT OF COMMERCE
Under the Paperwork Reduction Act of 1995, no persons are required to respond to a collection of information unless it displays a valid OMB control number.

DECLARATION (37 CFR 1.63) FOR UTILITY OR DESIGN APPLICATION USING AN APPLICATION DATA SHEET (37 CFR 1.76)

Title of Invention	METHOD FOR CODING AND AN APPARATUS

As the below named inventor, I hereby declare that:

This declaration is directed to:

☐ The attached application, or

☒ United States application or PCT international application number 13/666680

filed on November 1, 2012.

The above-identified application was made or authorized to be made by me.

I believe that I am the original inventor or an original joint inventor of a claimed invention in the application.

I hereby acknowledge that any willful false statement made in this declaration is punishable under 18 U.S.C. 1001 by fine or imprisonment of not more than **five** (5) years, or both.

WARNING:

Petitioner/applicant is cautioned to avoid submitting personal information in documents filed in a patent application that may contribute to identity theft. Personal information such as social security numbers, bank account numbers, or credit card numbers (other than a check or credit card authorization form PTO-2038 submitted for payment purposes) is never required by the USPTO to support a petition or an application. If this type of personal information is included in documents submitted to the USPTO, petitioners/applicants should consider redacting such personal information from the documents before submitting them to the USPTO. Petitioner/applicant is advised that the record of a patent application is available to the public after publication of the application (unless a non-publication request in compliance with 37 CFR 1.213(a) is made in the application) or issuance of a patent. Furthermore, the record from an abandoned application may also be available to the public if the application is referenced in a published application or an issued patent (see 37 CFR 1.14). Checks and credit card authorization forms PTO-2038 submitted for payment purposes are not retained in the application file and therefore are not publicly available.

LEGAL NAME OF INVENTOR

Inventor: Jani LAINEMA Date (Optional): NOV-02-2012

Signature:

Note: An application data sheet (PTO/SB/14 or equivalent), including naming the entire inventive entity, must accompany this form. Use an additional PTO/AIA/01 form for each additional inventor.

This collection of information is required by 35 U.S.C. 115 and 37 CFR 1.63. The information is required to obtain or retain a benefit by the public which is to file (and by the USPTO to process) an application. Confidentiality is governed by 35 U.S.C. 122 and 37 CFR 1.11 and 1.14. This collection is estimated to take 1 minute to complete, including gathering, preparing, and submitting the completed application form to the USPTO. Time will vary depending upon the individual case. Any comments on the amount of time you require to complete this form and/or suggestions for reducing this burden, should be sent to the Chief Information Officer, U.S. Patent and Trademark Office, U.S. Department of Commerce, P.O. Box 1450, Alexandria, VA 22313-1450. DO NOT SEND FEES OR COMPLETED FORMS TO THIS ADDRESS. **SEND TO: Commissioner for Patents, P.O. Box 1450, Alexandria, VA 22313-1450.**

If you need assistance in completing the form, call 1-800-PTO-9199 and select option 2.

PTO/AIA/01 (06-12)
Approved for use through 01/31/2014. OMB 0651-0032
U.S. Patent and Trademark Office; U.S. DEPARTMENT OF COMMERCE
Under the Paperwork Reduction Act of 1995, no persons are required to respond to a collection of information unless it displays a valid OMB control number.

DECLARATION (37 CFR 1.63) FOR UTILITY OR DESIGN APPLICATION USING AN APPLICATION DATA SHEET (37 CFR 1.76)

Title of Invention	METHOD FOR CODING AND AN APPARATUS

As the below named inventor, I hereby declare that:

This declaration is directed to:

☐ The attached application, or

☒ United States application or PCT international application number 13/666680

filed on November 1, 2012.

The above-identified application was made or authorized to be made by me.

I believe that I am the original inventor or an original joint inventor of a claimed invention in the application.

I hereby acknowledge that any willful false statement made in this declaration is punishable under 18 U.S.C. 1001 by fine or imprisonment of not more than five (5) years, or both.

WARNING:

Petitioner/applicant is cautioned to avoid submitting personal information in documents filed in a patent application that may contribute to identity theft. Personal information such as social security numbers, bank account numbers, or credit card numbers (other than a check or credit card authorization form PTO-2038 submitted for payment purposes) is never required by the USPTO to support a petition or an application. If this type of personal information is included in documents submitted to the USPTO, petitioners/applicants should consider redacting such personal information from the documents before submitting them to the USPTO. Petitioner/applicant is advised that the record of a patent application is available to the public after publication of the application (unless a non-publication request in compliance with 37 CFR 1.213(a) is made in the application) or issuance of a patent. Furthermore, the record from an abandoned application may also be available to the public if the application is referenced in a published application or an issued patent (see 37 CFR 1.14). Checks and credit card authorization forms PTO-2038 submitted for payment purposes are not retained in the application file and therefore are not publicly available.

LEGAL NAME OF INVENTOR

Inventor: Kemal UGUR Date (Optional): Nov-02-2012

Signature:

Note: An application data sheet (PTO/SB/14 or equivalent), including naming the entire inventive entity, must accompany this form. Use an additional PTO/AIA/01 form for each additional inventor.

This collection of information is required by 35 U.S.C. 115 and 37 CFR 1.63. The information is required to obtain or retain a benefit by the public which is to file (and by the USPTO to process) an application. Confidentiality is governed by 35 U.S.C. 122 and 37 CFR 1.11 and 1.14. This collection is estimated to take 1 minute to complete, including gathering, preparing, and submitting the completed application form to the USPTO. Time will vary depending upon the individual case. Any comments on the amount of time you require to complete this form and/or suggestions for reducing this burden, should be sent to the Chief Information Officer, U.S. Patent and Trademark Office, U.S. Department of Commerce, P.O. Box 1450, Alexandria, VA 22313-1450. DO NOT SEND FEES OR COMPLETED FORMS TO THIS ADDRESS. **SEND TO: Commissioner for Patents, P.O. Box 1450, Alexandria, VA 22313-1450.**

If you need assistance in completing the form, call 1-800-PTO-9199 and select option 2.

PATENT APPLICATION FEE DETERMINATION RECORD

Substitute for Form PTO-875

Application or Docket Number
16/741,156

APPLICATION AS FILED - PART I

FOR	(Column 1) NUMBER FILED	(Column 2) NUMBER EXTRA	SMALL ENTITY RATE($)	SMALL ENTITY FEE($)	OR	OTHER THAN SMALL ENTITY RATE($)	OTHER THAN SMALL ENTITY FEE($)
BASIC FEE (37 CFR 1.16(a), (b), or (c))	N/A	N/A	N/A			N/A	300
SEARCH FEE (37 CFR 1.16(k), (i), or (m))	N/A	N/A	N/A			N/A	660
EXAMINATION FEE (37 CFR 1.16(o), (p), or (q))	N/A	N/A	N/A			N/A	760
TOTAL CLAIMS (37 CFR 1.16(i))	30 minus 20 =	* 10			OR	x 100 =	1000
INDEPENDENT CLAIMS (37 CFR 1.16(h))	6 minus 3 =	* 3				x 460 =	1380
APPLICATION SIZE FEE (37 CFR 1.16(s))	If the specification and drawings exceed 100 sheets of paper, the application size fee due is $310 ($155 for small entity) for each additional 50 sheets or fraction thereof. See 35 U.S.C. 41(a)(1)(G) and 37 CFR 1.16(s).						0.00
MULTIPLE DEPENDENT CLAIM PRESENT (37 CFR 1.16(j))							0.00
* If the difference in column 1 is less than zero, enter "0" in column 2.			TOTAL			TOTAL	4100

APPLICATION AS AMENDED - PART II

		(Column 1) CLAIMS REMAINING AFTER AMENDMENT		(Column 2) HIGHEST NUMBER PREVIOUSLY PAID FOR	(Column 3) PRESENT EXTRA	SMALL ENTITY RATE($)	SMALL ENTITY ADDITIONAL FEE($)	OR	OTHER THAN SMALL ENTITY RATE($)	OTHER THAN SMALL ENTITY ADDITIONAL FEE($)
AMENDMENT A	Total (37 CFR 1.16(i))	*	Minus	**	=	x =		OR	x =	
AMENDMENT A	Independent (37 CFR 1.16(h))	*	Minus	***	=	x =		OR	x =	
AMENDMENT A	Application Size Fee (37 CFR 1.16(s))									
AMENDMENT A	FIRST PRESENTATION OF MULTIPLE DEPENDENT CLAIM (37 CFR 1.16(j))							OR		
						TOTAL ADD'L FEE		OR	TOTAL ADD'L FEE	

		(Column 1) CLAIMS REMAINING AFTER AMENDMENT		(Column 2) HIGHEST NUMBER PREVIOUSLY PAID FOR	(Column 3) PRESENT EXTRA	SMALL ENTITY RATE($)	SMALL ENTITY ADDITIONAL FEE($)	OR	OTHER THAN SMALL ENTITY RATE($)	OTHER THAN SMALL ENTITY ADDITIONAL FEE($)
AMENDMENT B	Total (37 CFR 1.16(i))	*	Minus	**	=	x =		OR	x =	
AMENDMENT B	Independent (37 CFR 1.16(h))	*	Minus	***	=	x =		OR	x =	
AMENDMENT B	Application Size Fee (37 CFR 1.16(s))									
AMENDMENT B	FIRST PRESENTATION OF MULTIPLE DEPENDENT CLAIM (37 CFR 1.16(j))							OR		
						TOTAL ADD'L FEE		OR	TOTAL ADD'L FEE	

* If the entry in column 1 is less than the entry in column 2, write "0" in column 3.
** If the "Highest Number Previously Paid For" IN THIS SPACE is less than 20, enter "20".
*** If the "Highest Number Previously Paid For" IN THIS SPACE is less than 3, enter "3".
The "Highest Number Previously Paid For" (Total or Independent) is the highest found in the appropriate box in column 1.

UNITED STATES PATENT AND TRADEMARK OFFICE

UNITED STATES DEPARTMENT OF COMMERCE
United States Patent and Trademark Office
Address: COMMISSIONER FOR PATENTS
P.O. Box 1450
Alexandria, Virginia 22313-1450
www.uspto.gov

APPLICATION NUMBER	FILING or 371(c) DATE	GRP ART UNIT	FIL FEE REC'D	ATTY.DOCKET.NO	TOT CLAIMS	IND CLAIMS
16/741,156	01/13/2020	2482	4100	042933/542643	30	6

CONFIRMATION NO. 3751

FILING RECEIPT

OC000000114390938

10949
Nokia Corporation and Alston & Bird LLP
c/o Alston & Bird LLP
Bank of America Plaza, 101 South Tryon Street
Suite 4000
Charlotte, NC 28280-4000

Date Mailed: 02/04/2020

Receipt is acknowledged of this non-provisional utility patent application. The application will be taken up for examination in due course. Applicant will be notified as to the results of the examination. Any correspondence concerning the application must include the following identification information: the U.S. APPLICATION NUMBER, FILING DATE, NAME OF FIRST INVENTOR, and TITLE OF INVENTION. Fees transmitted by check or draft are subject to collection.

Please verify the accuracy of the data presented on this receipt. If an error is noted on this Filing Receipt, please submit a written request for a corrected Filing Receipt, including a properly marked-up ADS showing the changes with strike-through for deletions and underlining for additions. If you received a "Notice to File Missing Parts" or other Notice requiring a response for this application, please submit any request for correction to this Filing Receipt with your reply to the Notice. When the USPTO processes the reply to the Notice, the USPTO will generate another Filing Receipt incorporating the requested corrections provided that the request is grantable.

Inventor(s)

Mehmet Oguz BICI, Tampere, FINLAND;
Jani LAINEMA, Tampere, FINLAND;
Kemal UGUR, Tampere, FINLAND;

Applicant(s)

NOKIA TECHNOLOGIES OY, Espoo, FINLAND;

Assignment For Published Patent Application

NOKIA TECHNOLOGIES OY, Espoo, FINLAND

Power of Attorney: The patent practitioners associated with Customer Number 10949

Domestic Priority data as claimed by applicant

This application is a CON of 16/356,733 03/18/2019 PAT 10536714
which is a CON of 15/681,725 08/21/2017 PAT 10237574
which is a CON of 15/426,822 02/07/2017 PAT 9743105
which is a CON of 13/666,680 11/01/2012 PAT 9571833
which claims benefit of 61/555,703 11/04/2011

Foreign Applications for which priority is claimed (You may be eligible to benefit from the **Patent Prosecution Highway** program at the USPTO. Please see http://www.uspto.gov for more information.) - None.
Foreign application information must be provided in an Application Data Sheet in order to constitute a claim to foreign priority. See 37 CFR 1.55 and 1.76.

Nokia Exhibit 2004, p. 93
Amazon.com v. Nokia
IPR2024-00605

Permission to Access Application via Priority Document Exchange: Yes

Permission to Access Search Results: Yes

Applicant may provide or rescind an authorization for access using Form PTO/SB/39 or Form PTO/SB/69 as appropriate.

If Required, Foreign Filing License Granted: 01/31/2020

The country code and number of your priority application, to be used for filing abroad under the Paris Convention, is **US 16/741,156**

Projected Publication Date: 05/14/2020

Non-Publication Request: No

Early Publication Request: No

Title

METHOD FOR CODING AND AN APPARATUS

Preliminary Class

375

Statement under 37 CFR 1.55 or 1.78 for AIA (First Inventor to File) Transition Applications: No

PROTECTING YOUR INVENTION OUTSIDE THE UNITED STATES

Since the rights granted by a U.S. patent extend only throughout the territory of the United States and have no effect in a foreign country, an inventor who wishes patent protection in another country must apply for a patent in a specific country or in regional patent offices. Applicants may wish to consider the filing of an international application under the Patent Cooperation Treaty (PCT). An international (PCT) application generally has the same effect as a regular national patent application in each PCT-member country. The PCT process **simplifies** the filing of patent applications on the same invention in member countries, but **does not result** in a grant of "an international patent" and does not eliminate the need of applicants to file additional documents and fees in countries where patent protection is desired.

Almost every country has its own patent law, and a person desiring a patent in a particular country must make an application for patent in that country in accordance with its particular laws. Since the laws of many countries differ in various respects from the patent law of the United States, applicants are advised to seek guidance from specific foreign countries to ensure that patent rights are not lost prematurely.

Applicants also are advised that in the case of inventions made in the United States, the Director of the USPTO must issue a license before applicants can apply for a patent in a foreign country. The filing of a U.S. patent application serves as a request for a foreign filing license. The application's filing receipt contains further information and guidance as to the status of applicant's license for foreign filing.

Applicants may wish to consult the USPTO booklet, "General Information Concerning Patents" (specifically, the section entitled "Treaties and Foreign Patents") for more information on timeframes and deadlines for filing foreign patent applications. The guide is available either by contacting the USPTO Contact Center at 800-786-9199, or it can be viewed on the USPTO website at http://www.uspto.gov/web/offices/pac/doc/general/index.html.

Nokia Exhibit 2004, p. 94
Amazon.com v. Nokia
IPR2024-00605

For information on preventing theft of your intellectual property (patents, trademarks and copyrights), you may wish to consult the U.S. Government website, http://www.stopfakes.gov. Part of a Department of Commerce initiative, this website includes self-help "toolkits" giving innovators guidance on how to protect intellectual property in specific countries such as China, Korea and Mexico. For questions regarding patent enforcement issues, applicants may call the U.S. Government hotline at 1-866-999-HALT (1-866-999-4258).

LICENSE FOR FOREIGN FILING UNDER

Title 35, United States Code, Section 184

Title 37, Code of Federal Regulations, 5.11 & 5.15

GRANTED

The applicant has been granted a license under 35 U.S.C. 184, if the phrase "IF REQUIRED, FOREIGN FILING LICENSE GRANTED" followed by a date appears on this form. Such licenses are issued in all applications where the conditions for issuance of a license have been met, regardless of whether or not a license may be required as set forth in 37 CFR 5.15. The scope and limitations of this license are set forth in 37 CFR 5.15(a) unless an earlier license has been issued under 37 CFR 5.15(b). The license is subject to revocation upon written notification. The date indicated is the effective date of the license, unless an earlier license of similar scope has been granted under 37 CFR 5.13 or 5.14.

This license is to be retained by the licensee and may be used at any time on or after the effective date thereof unless it is revoked. This license is automatically transferred to any related applications(s) filed under 37 CFR 1.53(d). This license is not retroactive.

The grant of a license does not in any way lessen the responsibility of a licensee for the security of the subject matter as imposed by any Government contract or the provisions of existing laws relating to espionage and the national security or the export of technical data. Licensees should apprise themselves of current regulations especially with respect to certain countries, of other agencies, particularly the Office of Defense Trade Controls, Department of State (with respect to Arms, Munitions and Implements of War (22 CFR 121-128)); the Bureau of Industry and Security, Department of Commerce (15 CFR parts 730-774); the Office of Foreign AssetsControl, Department of Treasury (31 CFR Parts 500+) and the Department of Energy.

NOT GRANTED

No license under 35 U.S.C. 184 has been granted at this time, if the phrase "IF REQUIRED, FOREIGN FILING LICENSE GRANTED" DOES NOT appear on this form. Applicant may still petition for a license under 37 CFR 5.12, if a license is desired before the expiration of 6 months from the filing date of the application. If 6 months has lapsed from the filing date of this application and the licensee has not received any indication of a secrecy order under 35 U.S.C. 181, the licensee may foreign file the application pursuant to 37 CFR 5.15(b).

SelectUSA

The United States represents the largest, most dynamic marketplace in the world and is an unparalleled location for business investment, innovation, and commercialization of new technologies. The U.S. offers tremendous resources and advantages for those who invest and manufacture goods here. Through SelectUSA, our nation works to promote and facilitate business investment. SelectUSA provides information assistance to the international investor

Nokia Exhibit 2004, p. 95
Amazon.com v. Nokia
IPR2024-00605

community; serves as an ombudsman for existing and potential investors; advocates on behalf of U.S. cities, states, and regions competing for global investment; and counsels U.S. economic development organizations on investment attraction best practices. To learn more about why the United States is the best country in the world to develop technology, manufacture products, deliver services, and grow your business, visit http://www.SelectUSA.gov or call +1-202-482-6800.

Nokia Exhibit 2004, p. 96
Amazon.com v. Nokia
IPR2024-00605

Substitute for form SB08
(Revised 07/09)

INFORMATION DISCLOSURE STATEMENT BY APPLICANT

(Use as many sheets as necessary)

Complete if Known	
Application Number	16/741,156
Filing Date	January 13, 2020
First Named Inventor	Bici et al.
Art Unit	2488
Examiner Name	
Attorney Docket Number	042933/542643

Sheet	1	of	5

U. S. PATENT DOCUMENTS

Examiner Initials*	Cite No.	Document Number Number - Kind Code (if known)	Publication Date MM-DD-YYYY	Name of Patentee or Applicant of Cited Document	Pages, Columns, Lines, Where Relevant Passages of Relevant Figures Appear
	1	US-2004/0234144 A1	11-25-2004	Sugimoto et al.	
	2	US-2007/0189389 A1	08-16-2007	Boisson et al.	
	3	US-2008/0159401 A1	07-03-2008	Lee et al.	
	4	US-2008/0232642 A1	09-25-2008	Chang	
	5	US-2011/0170602 A1	07-14-2011	Lee et al.	
	6	US-2011/0176013 A1	07-21-2011	Robertson et al.	
	7	US-2011/0176612 A1	07-21-2011	Tsai et al.	
	8	US-2011/0182362 A1	07-28-2011	Kim et al.	
	9	US-2012/0230408 A1	09-13-2012	Zhou	
	10	US-2012/0257678 A1	10-11-2012	Zhou et al.	
	11	US-2012/0269270 A1	10-25-2012	Chen et al.	
	12	US-2012/0300846 A1	11-29-2012	Sugio et al.	
	13	US-2012/0307905 A1	12-06-2012	Kim et al.	
	14	US-2012/0320984 A1	12-20-2012	Zhou	
	15	US-2013/0003850 A1	01-03-2013	Sugio et al.	
	16	US-2013/0004092 A1	01-03-2013	Sasai et al.	
	17	US-2013/0070855 A1	03-21-2013	Zheng et al.	
	18	US-2013/0083853 A1	04-04-2013	Coban et al.	
	19	US-2013/0272408 A1	10-17-2013	Chen et al.	

FOREIGN PATENT DOCUMENTS

Examiner Initials	Cite No.	Foreign Patent Document Country Code - Number Kind Code (if known)	Publication Date MM-DD-YYYY	Name of Patentee or Applicant of Cited Document	Pages, Columns, Lines, Where Relevant Passages or Relevant Figures Appear	English Language Translation Attached
	20	CN 101271580 A	09-24-2008	HIMAX Tech Ltd		

Examiner Signature		Date Considered	

*Examiner: Initial if reference considered, whether or not citation is in conformance with MPEP 609. Draw line through citation if not in conformance and not considered. Include copy of this form with next communication to applicant. LEGAL02/39610222v1

Submitted February 18, 2020

Substitute for form SB08 (Revised 07/09)	Complete if Known	
INFORMATION DISCLOSURE STATEMENT BY APPLICANT *(Use as many sheets as necessary)*	Application Number	16/741,156
	Filing Date	January 13, 2020
	First Named Inventor	Bici et al.
	Art Unit	2488
	Examiner Name	
Sheet 2 of 5	Attorney Docket Number	042933/542643

FOREIGN PATENT DOCUMENTS

Examiner Initials	Cite No.	Foreign Patent Document Country Code - Number Kind Code (if known)	Publication Date MM-DD-YYYY	Name of Patentee or Applicant of Cited Document	Pages, Columns, Lines, Where Relevant Passages or Relevant Figures Appear	English Language Translation Attached
	21	CN 101605255 B	05-04-2011	Huawei Tech Co Ltd		
	22	CN 1757238 A	04-05-2006	Thomson Licensing		
	23	WO 2011 115659 A1	09-22-2011	Thomson Licensing		
	24	WO 2011/062392 A2	05-26-2011	SK Telecom Co. Ltd.		

OTHER DOCUMENTS

Examiner Initials*	Cite No.	Include name of the author (in CAPITAL LETTERS), title of the article (when appropriate), title of the item (book, magazine, journal, serial, symposium, catalog, etc.), date, page(s), volume-issue number(s), publisher, city and/or country where published.	English Language Translation Attached
	25	Advisory Action for U.S. Patent Application No. 13/666,680 dated November 7, 2016, 4 pages.	
	26	**Bici, O. et al.**, *Non-CE13: Simplification of merge mode*, Joint Collaborative Team on Video Coding (JCT-VC) of ITU-T SG16 WP3 and ISO/IEC JTC1/SC29/WG11, 7th Meeting: Geneva, CH, 21-30 November, 2011, Document JCTVC-G593; URL: HTTP://WFTP3.ITU.INT/AV-ARCH/JCTVC-SITE/, 13 pages	
	27	**Bross, B. et al.**, *Core Experiment 9: MV Coding and Skip/Merge Operations*, Joint Collaborative Team on Video Coding (JCT-VC) of ITU-T SG16 WP3 and ISO/IEC JTC1/SC29/WG11, 6th Meeting, Torino, IT, 14-22 July, 2011; Document JCTVC-F909, 13 pages	
	28	**Bross, Benjamin, et al.**; *"WD4: Working Draft 4 of High-Efficiency Video Coding"*; Joint Collaborative Team on Video Coding (JCT-VC) of ITU-T SG16 WP3 and ISO/IEC JTC1/SC29/WG11; 6th Meeting; Torino, IT; 14-22 July 2011; Document JCTVC-F803_d; 232 pages	
	29	Extended European Search Report for corresponding European Application No. 12845839.5 dated March 21, 2016, 10 pages	
	30	Final Office Action for U.S. Patent Application No. 13/666,680 dated March 1, 2016, 35 pages.	

Examiner Signature		Date Considered	

*Examiner: Initial if reference considered, whether or not citation is in conformance with MPEP 609. Draw line through citation if not in conformance and not considered. Include copy of this form with next communication to applicant. LEGAL02/39610222v1

Submitted February 18, 2020

Substitute for form SB08 (Revised 07/09)	Complete if Known	
INFORMATION DISCLOSURE STATEMENT BY APPLICANT *(Use as many sheets as necessary)*	Application Number	16/741,156
	Filing Date	January 13, 2020
	First Named Inventor	Bici et al.
	Art Unit	2488
	Examiner Name	
Sheet 3 of 5	Attorney Docket Number	042933/542643

OTHER DOCUMENTS

Examiner Initials*	Cite No.	Include name of the author (in CAPITAL LETTERS), title of the article (when appropriate), title of the item (book, magazine, journal, serial, symposium, catalog, etc.), date, page(s), volume-issue number(s), publisher, city and/or country where published.	English Language Translation Attached
	31	**Han, Woo-Jin, et al.**; *"Improved Video Compression Efficiency Through Flexible Unit Representation and Corresponding Extension of Coding Tools"*; Circuits and Systems for Video Technology; IEEE Transactions on 20.12 (2010); 1709-1720	
	32	**Huang, Ai-Mei et al.**, *A multistage motion vector processing method for motion-compensated frame interpolation*, Image Processing, IEEE Transactions on 17.5 (2008) 694-708	
	33	International Search Report and Written Opinion from corresponding International Application No. PCT/FI2012/051070, dated March 27, 2013	
	34	**J.-L. Lin, Y.-W. Chen, Y.-W. Huang, S. Lei**; *"CE9: Results of Experiment ROB04"*; JCT-VC Doc. JCTVC-F052, Turin; Jul 2011	
	35	**Jeon, Y. et al.**, *On MVP list pruning process*, Joint Collaborative Team on Video Coding (JCT-VC) of ITU-T SG16 WP3 and ISO/IEC JTC1/SC29/WG11, 6th Meeting, Torino, IT, 14-22 July, 2011, Document JCTVC-F105, 7 pages	
	36	**Nakamura, H. et al.**, *Unification of derivation process for merge mode and MVP*, Joint Collaborative Team on Video Coding (JCT-VC) of ITU-T SG16 WP3 and ISO/IEC JTC1/SC29/WG11, 6th Meeting; Torino, IT, 14-22 July, 2011; Document JCTVC-F419; URL: http://wftp3.itu.int/AV-ARCH/JCTVC-SITE/2011_07_F_Torino/, 10 pages	
	37	Notice of Allowance for U.S. Application No. 15/681,725 dated May 30, 2018	
	38	Notice of Allowance for U.S. Application No. 15/681,725 dated October 25, 2018	
	39	Notice of Allowance for U.S. Application No. 16/356,733 dated August 30, 2019	
	40	Notice of Allowance for U.S. Patent Application No. 13/666,680 dated September 30, 2016, 17 pages.	
	41	Notice of Allowance for U.S. Patent Application No. 15/426,822 dated March 10, 2017, 8 pages	
	42	Office Action for Canadian Application No. 2,854,495 dated September 6, 2016	
	43	Office Action for Chinese Application No. 201280065777.5 dated October25, 2017 with English Translation, 8 pages	

Examiner Signature		Date Considered	

*Examiner: Initial if reference considered, whether or not citation is in conformance with MPEP 609. Draw line through citation if not in conformance and not considered. Include copy of this form with next communication to applicant. LEGAL02/39610222v1

Submitted February 18, 2020

Substitute for form SB08 (Revised 07/09)	Complete if Known	
INFORMATION DISCLOSURE STATEMENT BY APPLICANT *(Use as many sheets as necessary)*	Application Number	16/741,156
	Filing Date	January 13, 2020
	First Named Inventor	Bici et al.
	Art Unit	2488
	Examiner Name	
Sheet 4 of 5	Attorney Docket Number	042933/542643

OTHER DOCUMENTS

Examiner Initials*	Cite No.	Include name of the author (in CAPITAL LETTERS), title of the article (when appropriate), title of the item (book, magazine, journal, serial, symposium, catalog, etc.), date, page(s), volume-issue number(s), publisher, city and/or country where published.	English Language Translation Attached
	44	Office Action for Chinese Application No. 2012800657775 dated October 9, 2016	
	45	Office Action for corresponding Indian Application No. 4092/CHENP/2014 dated April 11, 2018 with English Translation, 7 pages	
	46	Office Action for European Application No. EP 12 845 839.5 dated June 6, 2019, 9 pages	
	47	Office Action for U.S. Application No. 13/666,680 dated March 1, 2016	
	48	Office Action for U.S. Patent Application No. 13/666,680 dated July 6, 2015, 25 pages.	
	49	Office Action for U.S. Patent Application No. 15/681,725 dated September 21, 2017	
	50	Office Action from corresponding Canadian Patent Application No. 2,854,495, dated October 7, 2015	
	51	Office Action from corresponding Korean Patent Application No. 2014-7015093, dated August 21, 2015	
	52	Office Action from Korean Patent Application No. 2014-7015093 dated August 22, 2016	
	53	**Oudin, S. et al.**; *"Block Merging for Quadtree-Based Video Coding"*; IEEE Int. Conf. on Multimedia and Expo; July 11-15; 2011; 6 pages	
	54	**Sullivan, G.J.**; *"Overview of the High Efficiency Video Coding (HEVC) Standard"*; IEEE Trans. On Circuits and Systems for Video Technology; Vol. 22, No. 12; December 2012; pp. 1649-1668	
	55	**Tai, Shen-Chuan, et al.**; *"A Multi-Pass True Motion Estimation Scheme with Motion Vector Propagation for Frame Rate Up-Conversion Applications"*; Journal of Display Technology; 4.2 (2008); 188-197	
	56	Taiwanese Office Action and Search Report from Taiwanese Patent Application No. 101140777 dated December 2, 2015	
	57	**Wiegand, Tomas, et al.**; *"WD3: Working Draft 3 of High-Efficiency Video Coding"*; Joint Collaborative Team on Video Coding (JCT-VC) of ITU-T SG16 WP3 and ISO/IEC JTC1/SC29/WG11; 5th Meeting; Geneva, CH, 16-23 March, 2011; Document JCTVC-E603; 239 pages	

Examiner Signature		Date Considered	

*Examiner: Initial if reference considered, whether or not citation is in conformance with MPEP 609. Draw line through citation if not in conformance and not considered. Include copy of this form with next communication to applicant. LEGAL02/39610222v1

Submitted February 18, 2020

Substitute for form SB08 (Revised 07/09)				Complete if Known	
INFORMATION DISCLOSURE STATEMENT BY APPLICANT *(Use as many sheets as necessary)*				Application Number	16/741,156
				Filing Date	January 13, 2020
				First Named Inventor	Bici et al.
				Art Unit	2488
				Examiner Name	
Sheet	5	of	5	Attorney Docket Number	042933/542643

OTHER DOCUMENTS

Examiner Initials*	Cite No.	Include name of the author (in CAPITAL LETTERS), title of the article (when appropriate), title of the item (book, magazine, journal, serial, symposium, catalog, etc.), date, page(s), volume-issue number(s), publisher, city and/or country where published.	English Language Translation Attached
	58	Zheng, Y. et al., *Merge Candidate Selection in 2NxN, Nx2N, and NxN Mode*, Joint Collaborative Team on Video Coding (JCT-VC) of ITU-T SG16 WP3 and ISO/IEC JTC1/SC29/WG11, 6th Meeting, Torino, IT, 14-22 July, 2011; Document JCTVC-F302, 6 pages	

Examiner Signature		Date Considered	

*Examiner: Initial if reference considered, whether or not citation is in conformance with MPEP 609. Draw line through citation if not in conformance and not considered. Include copy of this form with next communication to applicant. LEGAL02/39610222v1

Submitted February 18, 2020

Electronic Acknowledgement Receipt

EFS ID:	38616228
Application Number:	16741156
International Application Number:	
Confirmation Number:	3751
Title of Invention:	METHOD FOR CODING AND AN APPARATUS
First Named Inventor/Applicant Name:	Mehmet Oguz BICI
Customer Number:	10949
Filer:	Guy Randall Gosnell/Joyce Smith
Filer Authorized By:	Guy Randall Gosnell
Attorney Docket Number:	042933/542643
Receipt Date:	18-FEB-2020
Filing Date:	13-JAN-2020
Time Stamp:	15:29:19
Application Type:	Utility under 35 USC 111(a)

Payment information:

Submitted with Payment	no

File Listing:

Document Number	Document Description	File Name	File Size(Bytes)/ Message Digest	Multi Part /.zip	Pages (if appl.)
1		IDS542643.PDF	493853 29111829cac2ee80f3f30f7e279c1b4d9e4eec9e	yes	6

	Multipart Description/PDF files in .zip description		
	Document Description	**Start**	**End**
	Transmittal Letter	1	1
	Information Disclosure Statement (IDS) Form (SB08)	2	6
Warnings:			
Information:			
	Total Files Size (in bytes):	493853	

This Acknowledgement Receipt evidences receipt on the noted date by the USPTO of the indicated documents, characterized by the applicant, and including page counts, where applicable. It serves as evidence of receipt similar to a Post Card, as described in MPEP 503.

New Applications Under 35 U.S.C. 111
If a new application is being filed and the application includes the necessary components for a filing date (see 37 CFR 1.53(b)-(d) and MPEP 506), a Filing Receipt (37 CFR 1.54) will be issued in due course and the date shown on this Acknowledgement Receipt will establish the filing date of the application.
National Stage of an International Application under 35 U.S.C. 371
If a timely submission to enter the national stage of an international application is compliant with the conditions of 35 U.S.C. 371 and other applicable requirements a Form PCT/DO/EO/903 indicating acceptance of the application as a national stage submission under 35 U.S.C. 371 will be issued in addition to the Filing Receipt, in due course.
New International Application Filed with the USPTO as a Receiving Office
If a new international application is being filed and the international application includes the necessary components for an international filing date (see PCT Article 11 and MPEP 1810), a Notification of the International Application Number and of the International Filing Date (Form PCT/RO/105) will be issued in due course, subject to prescriptions concerning national security, and the date shown on this Acknowledgement Receipt will establish the international filing date of the application.

Attorney's Docket No. 042933/542643 PATENT

IN THE UNITED STATES PATENT AND TRADEMARK OFFICE

In re:	Bici et al.	Confirmation No.:	3751
Appl. No.:	16/741,156	Art Unit:	2488
Filed:	January 13, 2020		
For:	METHOD FOR CODING AND AN APPARATUS		

Submitted via EFS-Web
Commissioner for Patents
P.O. Box 1450
Alexandria, VA 22313-1450

INFORMATION DISCLOSURE STATEMENT
CITATION UNDER 37 C.F.R. § 1.97

Attached is a list of documents on form PTO-SB08.

It is requested that the Examiner consider these documents and officially make them of record in accordance with the provisions of 37 C.F.R. § 1.97 and Section 609 of the MPEP. By identifying the listed documents, Applicant in no way makes any admission as to the prior art status of the listed documents, but is instead identifying the listed documents for the sake of full disclosure.

Copies of all listed documents (other than U.S. patents, U.S. patent application publications, or patents or publications otherwise determined cumulative) are attached, except those (if any) that were previously submitted to, or cited by, the Office during the prosecution of any application(s) upon which the present application directly relies for an earlier effective filing date under 35 U.S.C. § 120. It is noted that 37 C.F.R. § 1.98(d) establishes that copies of documents previously submitted to, or cited by, the Office during prosecution of said application(s) are not required to be furnished; however, copies of such documents will be furnished upon request.

In accordance with 37 C.F.R. § 1.98(d) the reference above to said application(s) includes those application(s) properly identified in the table below:

Application No.	Filing Date	Pub./Patent No.	Status
16/356,733	March 18, 2019	10,536,714	Patented
15/681,725	August 21, 2017	10,237,574	Patented
15/426,822	February 7, 2017	9,743,105	Patented
13/666,680	November 1, 2012	9,571,833	Patented

Respectfully submitted,

Guy R. Gosnell
Registration No. 34,610

Customer No. 10949
ALSTON & BIRD LLP
Bank of America Plaza
101 South Tryon Street, Suite 4000
Charlotte, NC 28280-4000
Tel Charlotte Office (704) 444-1000
Fax Charlotte Office (704) 444-1111
LEGAL02/39610295v1

UNITED STATES PATENT AND TRADEMARK OFFICE

UNITED STATES DEPARTMENT OF COMMERCE
United States Patent and Trademark Office
Address: COMMISSIONER FOR PATENTS
P.O. Box 1450
Alexandria, Virginia 22313-1450
www.uspto.gov

APPLICATION NUMBER	FILING OR 371(C) DATE	FIRST NAMED APPLICANT	ATTY. DOCKET NO./TITLE
16/741,156	01/13/2020	Mehmet Oguz BICI	042933/542643

CONFIRMATION NO. 3751

PUBLICATION NOTICE

OC000000117092280

10949
Nokia Corporation and Alston & Bird LLP
c/o Alston & Bird LLP
Bank of America Plaza, 101 South Tryon Street
Suite 4000
Charlotte, NC 28280-4000

Title:METHOD FOR CODING AND AN APPARATUS

Publication No.US-2020-0154132-A1
Publication Date:05/14/2020

NOTICE OF PUBLICATION OF APPLICATION

The above-identified application will be electronically published as a patent application publication pursuant to 37 CFR 1.211, et seq. The patent application publication number and publication date are set forth above.

The publication may be accessed through the USPTO's publically available Searchable Databases via the Internet at www.uspto.gov. The direct link to access the publication is currently http://www.uspto.gov/patft/.

The publication process established by the Office does not provide for mailing a copy of the publication to applicant. A copy of the publication may be obtained from the Office upon payment of the appropriate fee set forth in 37 CFR 1.19(a)(1). Orders for copies of patent application publications are handled by the USPTO's Public Records Division. The Public Records Division can be reached by telephone at (571) 272-3150 or (800) 972-6382, by facsimile at (571) 273-3250, by mail addressed to the United States Patent and Trademark Office, Public Records Division, Alexandria, VA 22313-1450 or via the Internet.

In addition, information on the status of the application, including the mailing date of Office actions and the dates of receipt of correspondence filed in the Office, may also be accessed via the Internet through the Patent Electronic Business Center at www.uspto.gov using the public side of the Patent Application Information and Retrieval (PAIR) system. The direct link to access this status information is currently https://portal.uspto.gov/pair/PublicPair. Prior to publication, such status information is confidential and may only be obtained by applicant using the private side of PAIR.

Further assistance in electronically accessing the publication, or about PAIR, is available by calling the Patent Electronic Business Center at 1-866-217-9197.

Office of Data Managment, Application Assistance Unit (571) 272-4000, or (571) 272-4200, or 1-888-786-0101

Nokia Exhibit 2004, p. 105
Amazon.com v. Nokia
IPR2024-00605

Doc Code: DIST.E.FILE **Document Description: Electronic Terminal Disclaimer - Filed**	PTO/SB/26 U.S. Patent and Trademark Office Department of Commerce

Electronic Petition Request	**TERMINAL DISCLAIMER TO OBVIATE A DOUBLE PATENTING REJECTION OVER A "PRIOR" PATENT**
Application Number	16741156
Filing Date	13-Jan-2020
First Named Inventor	Mehmet BICI
Attorney Docket Number	042933/542643
Title of Invention	METHOD FOR CODING AND AN APPARATUS

☒ Filing of terminal disclaimer does not obviate requirement for response under 37 CFR 1.111 to outstanding Office Action

☒ This electronic Terminal Disclaimer is not being used for a Joint Research Agreement.

Owner	Percent Interest
NOKIA TECHNOLOGIES OY	100%

The owner(s) with percent interest listed above in the instant application hereby disclaims, except as provided below, the terminal part of the statutory term of any patent granted on the instant application which would extend beyond the expiration date of the full statutory term of prior patent number(s)

9571833

9743105

10237574

10536714

as the term of said prior patent is presently shortened by any terminal disclaimer. The owner hereby agrees that any patent so granted on the instant application shall be enforceable only for and during such period that it and the prior patent are commonly owned. This agreement runs with any patent granted on the instant application and is binding upon the grantee, its successors or assigns.

In making the above disclaimer, the owner does not disclaim the terminal part of the term of any patent granted on the instant application that would extend to the expiration date of the full statutory term of the prior patent, "as the term of said prior patent is presently shortened by any terminal disclaimer," in the event that said prior patent later:
- expires for failure to pay a maintenance fee;
- is held unenforceable;
- is found invalid by a court of competent jurisdiction;
- is statutorily disclaimed in whole or terminally disclaimed under 37 CFR 1.321;
- has all claims canceled by a reexamination certificate;
- is reissued; or
- is in any manner terminated prior to the expiration of its full statutory term as presently shortened by any terminal disclaimer.

(●) Terminal disclaimer fee under 37 CFR 1.20(d) is included with Electronic Terminal Disclaimer request.

( ) I certify, in accordance with 37 CFR 1.4(d)(4), that the terminal disclaimer fee under 37 CFR 1.20(d) required for this terminal disclaimer has already been paid in the above-identified application.

Applicant claims the following fee status:

( ) Small Entity

( ) Micro Entity

(●) Regular Undiscounted

I hereby declare that all statements made herein of my own knowledge are true and that all statements made on information and belief are believed to be true; and further that these statements were made with the knowledge that willful false statements and the like so made are punishable by fine or imprisonment, or both, under Section 1001 of Title 18 of the United States Code and that such willful false statements may jeopardize the validity of the application or any patent issued thereon.

THIS PORTION MUST BE COMPLETED BY THE SIGNATORY OR SIGNATORIES

I certify, in accordance with 37 CFR 1.4(d)(4) that I am:

(●) An attorney or agent registered to practice before the Patent and Trademark Office who is of record in this application

Registration Number 34610

( ) A sole inventor

( ) A joint inventor; I certify that I am authorized to sign this submission on behalf of all of the inventors as evidenced by the power of attorney in the application

( ) A joint inventor; all of whom are signing this request

Signature	/Guy R. Gosnell/
Name	Guy R. Gosnell

*Statement under 37 CFR 3.73(b) is required if terminal disclaimer is signed by the assignee (owner).
Form PTO/SB/96 may be used for making this certification. See MPEP § 324.

Electronic Patent Application Fee Transmittal

Application Number:	16741156
Filing Date:	13-Jan-2020
Title of Invention:	METHOD FOR CODING AND AN APPARATUS
First Named Inventor/Applicant Name:	Mehmet Oguz BICI
Filer:	Guy Randall Gosnell/Torrey Wyatt
Attorney Docket Number:	042933/542643

Filed as Large Entity

Filing Fees for Utility under 35 USC 111(a)

Description	Fee Code	Quantity	Amount	Sub-Total in USD($)
Basic Filing:				
STATUTORY OR TERMINAL DISCLAIMER	1814	1	170	170
Pages:				
Claims:				
Miscellaneous-Filing:				
Petition:				
Patent-Appeals-and-Interference:				
Post-Allowance-and-Post-Issuance:				

Description	Fee Code	Quantity	Amount	Sub-Total in USD($)
Extension-of-Time:				
Miscellaneous:				
			Total in USD ($)	**170**

Doc Code: DISQ.E.FILE
Document Description: Electronic Terminal Disclaimer – Approved

Application No.: 16741156

Filing Date: 13-Jan-2020

Applicant/Patent under Reexamination: BICI

Electronic Terminal Disclaimer filed on February 23, 2021

☒ APPROVED

This patent is subject to a terminal disclaimer

☐ DISAPPROVED

Approved/Disapproved by: Electronic Terminal Disclaimer automatically approved by EFS-Web

U.S. Patent and Trademark Office

Electronic Acknowledgement Receipt

EFS ID:	42001267
Application Number:	16741156
International Application Number:	
Confirmation Number:	3751
Title of Invention:	METHOD FOR CODING AND AN APPARATUS
First Named Inventor/Applicant Name:	Mehmet Oguz BICI
Customer Number:	10949
Filer:	Guy Randall Gosnell/Torrey Wyatt
Filer Authorized By:	Guy Randall Gosnell
Attorney Docket Number:	042933/542643
Receipt Date:	23-FEB-2021
Filing Date:	13-JAN-2020
Time Stamp:	17:29:17
Application Type:	Utility under 35 USC 111(a)

Payment information:

Submitted with Payment	yes
Payment Type	DA
Payment was successfully received in RAM	$170
RAM confirmation Number	E20212MH29132321
Deposit Account	
Authorized User	

The Director of the USPTO is hereby authorized to charge indicated fees and credit any overpayment as follows:

File Listing:

Document Number	Document Description	File Name	File Size(Bytes)/ Message Digest	Multi Part /.zip	Pages (if appl.)
1	Terminal Disclaimer-Filed (Electronic)	eTerminal-Disclaimer.pdf	34819 f605228a39ae4fef1a48cbd9ee68ec90f383aad1	no	3
Warnings:					
Information:					
2	Fee Worksheet (SB06)	fee-info.pdf	30544 c6edc8dc8333cbc1103e32a99b7aa7b24747e90a	no	2
Warnings:					
Information:					
		Total Files Size (in bytes):	65363		

This Acknowledgement Receipt evidences receipt on the noted date by the USPTO of the indicated documents, characterized by the applicant, and including page counts, where applicable. It serves as evidence of receipt similar to a Post Card, as described in MPEP 503.

New Applications Under 35 U.S.C. 111
If a new application is being filed and the application includes the necessary components for a filing date (see 37 CFR 1.53(b)-(d) and MPEP 506), a Filing Receipt (37 CFR 1.54) will be issued in due course and the date shown on this Acknowledgement Receipt will establish the filing date of the application.
National Stage of an International Application under 35 U.S.C. 371
If a timely submission to enter the national stage of an international application is compliant with the conditions of 35 U.S.C. 371 and other applicable requirements a Form PCT/DO/EO/903 indicating acceptance of the application as a national stage submission under 35 U.S.C. 371 will be issued in addition to the Filing Receipt, in due course.
New International Application Filed with the USPTO as a Receiving Office
If a new international application is being filed and the international application includes the necessary components for an international filing date (see PCT Article 11 and MPEP 1810), a Notification of the International Application Number and of the International Filing Date (Form PCT/RO/105) will be issued in due course, subject to prescriptions concerning national security, and the date shown on this Acknowledgement Receipt will establish the international filing date of the application.

UNITED STATES PATENT AND TRADEMARK OFFICE

UNITED STATES DEPARTMENT OF COMMERCE
United States Patent and Trademark Office
Address: COMMISSIONER FOR PATENTS
P.O. Box 1450
Alexandria, Virginia 22313-1450
www.uspto.gov

NOTICE OF ALLOWANCE AND FEE(S) DUE

10949 7590 03/08/2021
Nokia Corporation and Alston & Bird LLP
c/o Alston & Bird LLP
One South at The Plaza, 101 South Tryon Street
Suite 4000
Charlotte, NC 28280-4000

EXAMINER
AYNALEM, NATHNAEL B

ART UNIT	PAPER NUMBER
2488	

DATE MAILED: 03/08/2021

APPLICATION NO.	FILING DATE	FIRST NAMED INVENTOR	ATTORNEY DOCKET NO.	CONFIRMATION NO.
16/741,156	01/13/2020	Mehmet Oguz BICI	042933/542643	3751

TITLE OF INVENTION: METHOD FOR CODING AND AN APPARATUS

APPLN. TYPE	ENTITY STATUS	ISSUE FEE DUE	PUBLICATION FEE DUE	PREV. PAID ISSUE FEE	TOTAL FEE(S) DUE	DATE DUE
nonprovisional	UNDISCOUNTED	$1200	$0.00	$0.00	$1200	06/08/2021

THE APPLICATION IDENTIFIED ABOVE HAS BEEN EXAMINED AND IS ALLOWED FOR ISSUANCE AS A PATENT. PROSECUTION ON THE MERITS IS CLOSED. THIS NOTICE OF ALLOWANCE IS NOT A GRANT OF PATENT RIGHTS. THIS APPLICATION IS SUBJECT TO WITHDRAWAL FROM ISSUE AT THE INITIATIVE OF THE OFFICE OR UPON PETITION BY THE APPLICANT. SEE 37 CFR 1.313 AND MPEP 1308.

THE ISSUE FEE AND PUBLICATION FEE (IF REQUIRED) MUST BE PAID WITHIN THREE MONTHS FROM THE MAILING DATE OF THIS NOTICE OR THIS APPLICATION SHALL BE REGARDED AS ABANDONED. THIS STATUTORY PERIOD CANNOT BE EXTENDED. SEE 35 U.S.C. 151. THE ISSUE FEE DUE INDICATED ABOVE DOES NOT REFLECT A CREDIT FOR ANY PREVIOUSLY PAID ISSUE FEE IN THIS APPLICATION. IF AN ISSUE FEE HAS PREVIOUSLY BEEN PAID IN THIS APPLICATION (AS SHOWN ABOVE), THE RETURN OF PART B OF THIS FORM WILL BE CONSIDERED A REQUEST TO REAPPLY THE PREVIOUSLY PAID ISSUE FEE TOWARD THE ISSUE FEE NOW DUE.

HOW TO REPLY TO THIS NOTICE:

I. Review the ENTITY STATUS shown above. If the ENTITY STATUS is shown as SMALL or MICRO, verify whether entitlement to that entity status still applies.

If the ENTITY STATUS is the same as shown above, pay the TOTAL FEE(S) DUE shown above.

If the ENTITY STATUS is changed from that shown above, on PART B - FEE(S) TRANSMITTAL, complete section number 5 titled "Change in Entity Status (from status indicated above)".

For purposes of this notice, small entity fees are 1/2 the amount of undiscounted fees, and micro entity fees are 1/2 the amount of small entity fees.

II. PART B - FEE(S) TRANSMITTAL, or its equivalent, must be completed and returned to the United States Patent and Trademark Office (USPTO) with your ISSUE FEE and PUBLICATION FEE (if required). If you are charging the fee(s) to your deposit account, section "4b" of Part B - Fee(s) Transmittal should be completed and an extra copy of the form should be submitted. If an equivalent of Part B is filed, a request to reapply a previously paid issue fee must be clearly made, and delays in processing may occur due to the difficulty in recognizing the paper as an equivalent of Part B.

III. All communications regarding this application must give the application number. Please direct all communications prior to issuance to Mail Stop ISSUE FEE unless advised to the contrary.

IMPORTANT REMINDER: Maintenance fees are due in utility patents issuing on applications filed on or after Dec. 12, 1980. It is patentee's responsibility to ensure timely payment of maintenance fees when due. More information is available at www.uspto.gov/PatentMaintenanceFees.

Nokia Exhibit 2004, p. 114
Amazon.com v. Nokia
IPR2024-00605

PART B - FEE(S) TRANSMITTAL

Complete and send this form, together with applicable fee(s), by mail or fax, or via EFS-Web.

By mail, send to: Mail Stop ISSUE FEE
Commissioner for Patents
P.O. Box 1450
Alexandria, Virginia 22313-1450

By fax, send to: (571)-273-2885

INSTRUCTIONS: This form should be used for transmitting the ISSUE FEE and PUBLICATION FEE (if required). Blocks 1 through 5 should be completed where appropriate. All further correspondence including the Patent, advance orders and notification of maintenance fees will be mailed to the current correspondence address as indicated unless corrected below or directed otherwise in Block 1, by (a) specifying a new correspondence address; and/or (b) indicating a separate "FEE ADDRESS" for maintenance fee notifications.

CURRENT CORRESPONDENCE ADDRESS (Note: Use Block 1 for any change of address)

10949 7590 03/08/2021
Nokia Corporation and Alston & Bird LLP
c/o Alston & Bird LLP
One South at The Plaza, 101 South Tryon Street
Suite 4000
Charlotte, NC 28280-4000

Note: A certificate of mailing can only be used for domestic mailings of the Fee(s) Transmittal. This certificate cannot be used for any other accompanying papers. Each additional paper, such as an assignment or formal drawing, must have its own certificate of mailing or transmission.

Certificate of Mailing or Transmission

I hereby certify that this Fee(s) Transmittal is being deposited with the United States Postal Service with sufficient postage for first class mail in an envelope addressed to the Mail Stop ISSUE FEE address above, or being transmitted to the USPTO via EFS-Web or by facsimile to (571) 273-2885, on the date below.

(Typed or printed name)

(Signature)

(Date)

APPLICATION NO.	FILING DATE	FIRST NAMED INVENTOR	ATTORNEY DOCKET NO.	CONFIRMATION NO.
16/741,156	01/13/2020	Mehmet Oguz BICI	042933/542643	3751

TITLE OF INVENTION: METHOD FOR CODING AND AN APPARATUS

APPLN. TYPE	ENTITY STATUS	ISSUE FEE DUE	PUBLICATION FEE DUE	PREV. PAID ISSUE FEE	TOTAL FEE(S) DUE	DATE DUE
nonprovisional	UNDISCOUNTED	$1200	$0.00	$0.00	$1200	06/08/2021

EXAMINER	ART UNIT	CLASS-SUBCLASS
AYNALEM, NATHNAEL B	2488	375-240160

1. Change of correspondence address or indication of "Fee Address" (37 CFR 1.363).

❑ Change of correspondence address (or Change of Correspondence Address form PTO/SB/122) attached.

❑ "Fee Address" indication (or "Fee Address" Indication form PTO/SB/47; Rev 03-09 or more recent) attached. **Use of a Customer Number is required.**

2. For printing on the patent front page, list
(1) The names of up to 3 registered patent attorneys or agents OR, alternatively,
(2) The name of a single firm (having as a member a registered attorney or agent) and the names of up to 2 registered patent attorneys or agents. If no name is listed, no name will be printed.

1_____
2_____
3_____

3. ASSIGNEE NAME AND RESIDENCE DATA TO BE PRINTED ON THE PATENT (print or type)

PLEASE NOTE: Unless an assignee is identified below, no assignee data will appear on the patent. If an assignee is identified below, the document must have been previously recorded, or filed for recordation, as set forth in 37 CFR 3.11 and 37 CFR 3.81(a). Completion of this form is NOT a substitute for filing an assignment.

(A) NAME OF ASSIGNEE (B) RESIDENCE: (CITY and STATE OR COUNTRY)

Please check the appropriate assignee category or categories (will not be printed on the patent) : ❑ Individual ❑ Corporation or other private group entity ❑ Government

4a. Fees submitted: ❑Issue Fee ❑Publication Fee (if required) ❑Advance Order - # of Copies _____

4b. Method of Payment: *(Please first reapply any previously paid fee shown above)*

❑ Electronic Payment via EFS-Web ❑ Enclosed check ❑ Non-electronic payment by credit card (Attach form PTO-2038)

❑ The Director is hereby authorized to charge the required fee(s), any deficiency, or credit any overpayment to Deposit Account No. _____

5. **Change in Entity Status** (from status indicated above)

❑ Applicant certifying micro entity status. See 37 CFR 1.29

❑ Applicant asserting small entity status. See 37 CFR 1.27

❑ Applicant changing to regular undiscounted fee status.

NOTE: Absent a valid certification of Micro Entity Status (see forms PTO/SB/15A and 15B), issue fee payment in the micro entity amount will not be accepted at the risk of application abandonment.
NOTE: If the application was previously under micro entity status, checking this box will be taken to be a notification of loss of entitlement to micro entity status.
NOTE: Checking this box will be taken to be a notification of loss of entitlement to small or micro entity status, as applicable.

NOTE: This form must be signed in accordance with 37 CFR 1.31 and 1.33. See 37 CFR 1.4 for signature requirements and certifications.

Authorized Signature _____ Date _____

Typed or printed name _____ Registration No. _____

Nokia Exhibit 2004, p. 115
Amazon.com v. Nokia
IPR2024-00605

UNITED STATES DEPARTMENT OF COMMERCE
United States Patent and Trademark Office
Address: COMMISSIONER FOR PATENTS
P.O. Box 1450
Alexandria, Virginia 22313-1450
www.uspto.gov

APPLICATION NO.	FILING DATE	FIRST NAMED INVENTOR	ATTORNEY DOCKET NO.	CONFIRMATION NO.
16/741,156	01/13/2020	Mehmet Oguz BICI	042933/542643	3751

10949 7590 03/08/2021
Nokia Corporation and Alston & Bird LLP
c/o Alston & Bird LLP
One South at The Plaza, 101 South Tryon Street
Suite 4000
Charlotte, NC 28280-4000

EXAMINER
AYNALEM, NATHNAEL B

ART UNIT	PAPER NUMBER
2488	

DATE MAILED: 03/08/2021

Determination of Patent Term Adjustment under 35 U.S.C. 154 (b)
(Applications filed on or after May 29, 2000)

The Office has discontinued providing a Patent Term Adjustment (PTA) calculation with the Notice of Allowance.

Section 1(h)(2) of the AIA Technical Corrections Act amended 35 U.S.C. 154(b)(3)(B)(i) to eliminate the requirement that the Office provide a patent term adjustment determination with the notice of allowance. See Revisions to Patent Term Adjustment, 78 Fed. Reg. 19416, 19417 (Apr. 1, 2013). Therefore, the Office is no longer providing an initial patent term adjustment determination with the notice of allowance. The Office will continue to provide a patent term adjustment determination with the Issue Notification Letter that is mailed to applicant approximately three weeks prior to the issue date of the patent, and will include the patent term adjustment on the patent. Any request for reconsideration of the patent term adjustment determination (or reinstatement of patent term adjustment) should follow the process outlined in 37 CFR 1.705.

Any questions regarding the Patent Term Extension or Adjustment determination should be directed to the Office of Patent Legal Administration at (571)-272-7702. Questions relating to issue and publication fee payments should be directed to the Customer Service Center of the Office of Patent Publication at 1-(888)-786-0101 or (571)-272-4200.

Nokia Exhibit 2004, p. 116
Amazon.com v. Nokia
IPR2024-00605

OMB Clearance and PRA Burden Statement for PTOL-85 Part B

The Paperwork Reduction Act (PRA) of 1995 requires Federal agencies to obtain Office of Management and Budget approval before requesting most types of information from the public. When OMB approves an agency request to collect information from the public, OMB (i) provides a valid OMB Control Number and expiration date for the agency to display on the instrument that will be used to collect the information and (ii) requires the agency to inform the public about the OMB Control Number's legal significance in accordance with 5 CFR 1320.5(b).

The information collected by PTOL-85 Part B is required by 37 CFR 1.311. The information is required to obtain or retain a benefit by the public which is to file (and by the USPTO to process) an application. Confidentiality is governed by 35 U.S.C. 122 and 37 CFR 1.14. This collection is estimated to take 30 minutes to complete, including gathering, preparing, and submitting the completed application form to the USPTO. Time will vary depending upon the individual case. Any comments on the amount of time you require to complete this form and/or suggestions for reducing this burden, should be sent to the Chief Information Officer, U.S. Patent and Trademark Office, U.S. Department of Commerce, P.O. Box 1450, Alexandria, Virginia 22313-1450. DO NOT SEND FEES OR COMPLETED FORMS TO THIS ADDRESS. SEND TO: Commissioner for Patents, P.O. Box 1450, Alexandria, Virginia 22313-1450. Under the Paperwork Reduction Act of 1995, no persons are required to respond to a collection of information unless it displays a valid OMB control number.

Privacy Act Statement

The Privacy Act of 1974 (P.L. 93-579) requires that you be given certain information in connection with your submission of the attached form related to a patent application or patent. Accordingly, pursuant to the requirements of the Act, please be advised that: (1) the general authority for the collection of this information is 35 U.S.C. 2(b)(2); (2) furnishing of the information solicited is voluntary; and (3) the principal purpose for which the information is used by the U.S. Patent and Trademark Office is to process and/or examine your submission related to a patent application or patent. If you do not furnish the requested information, the U.S. Patent and Trademark Office may not be able to process and/or examine your submission, which may result in termination of proceedings or abandonment of the application or expiration of the patent.

The information provided by you in this form will be subject to the following routine uses:

1. The information on this form will be treated confidentially to the extent allowed under the Freedom of Information Act (5 U.S.C. 552) and the Privacy Act (5 U.S.C 552a). Records from this system of records may be disclosed to the Department of Justice to determine whether disclosure of these records is required by the Freedom of Information Act.
2. A record from this system of records may be disclosed, as a routine use, in the course of presenting evidence to a court, magistrate, or administrative tribunal, including disclosures to opposing counsel in the course of settlement negotiations.
3. A record in this system of records may be disclosed, as a routine use, to a Member of Congress submitting a request involving an individual, to whom the record pertains, when the individual has requested assistance from the Member with respect to the subject matter of the record.
4. A record in this system of records may be disclosed, as a routine use, to a contractor of the Agency having need for the information in order to perform a contract. Recipients of information shall be required to comply with the requirements of the Privacy Act of 1974, as amended, pursuant to 5 U.S.C. 552a(m).
5. A record related to an International Application filed under the Patent Cooperation Treaty in this system of records may be disclosed, as a routine use, to the International Bureau of the World Intellectual Property Organization, pursuant to the Patent Cooperation Treaty.
6. A record in this system of records may be disclosed, as a routine use, to another federal agency for purposes of National Security review (35 U.S.C. 181) and for review pursuant to the Atomic Energy Act (42 U.S.C. 218(c)).
7. A record from this system of records may be disclosed, as a routine use, to the Administrator, General Services, or his/her designee, during an inspection of records conducted by GSA as part of that agency's responsibility to recommend improvements in records management practices and programs, under authority of 44 U.S.C. 2904 and 2906. Such disclosure shall be made in accordance with the GSA regulations governing inspection of records for this purpose, and any other relevant (i.e., GSA or Commerce) directive. Such disclosure shall not be used to make determinations about individuals.
8. A record from this system of records may be disclosed, as a routine use, to the public after either publication of the application pursuant to 35 U.S.C. 122(b) or issuance of a patent pursuant to 35 U.S.C. 151. Further, a record may be disclosed, subject to the limitations of 37 CFR 1.14, as a routine use, to the public if the record was filed in an application which became abandoned or in which the proceedings were terminated and which application is referenced by either a published application, an application open to public inspection or an issued patent.
9. A record from this system of records may be disclosed, as a routine use, to a Federal, State, or local law enforcement agency, if the USPTO becomes aware of a violation or potential violation of law or regulation.

Notice of Allowability	Application No. 16/741,156	Applicant(s) BICI et al.	
	Examiner NATHNAEL AYNALEM	Art Unit 2488	AIA (FITF) Status No

-- The MAILING DATE of this communication appears on the cover sheet with the correspondence address--

All claims being allowable, PROSECUTION ON THE MERITS IS (OR REMAINS) CLOSED in this application. If not included herewith (or previously mailed), a Notice of Allowance (PTOL-85) or other appropriate communication will be mailed in due course. **THIS NOTICE OF ALLOWABILITY IS NOT A GRANT OF PATENT RIGHTS.** This application is subject to withdrawal from issue at the initiative of the Office or upon petition by the applicant. See 37 CFR 1.313 and MPEP 1308.

1. ☑ This communication is responsive to application filed on 01/13/2020.
   ☐ A declaration(s)/affidavit(s) under **37 CFR 1.130(b)** was/were filed on _____.

2. ☐ An election was made by the applicant in response to a restriction requirement set forth during the interview on _____; the restriction requirement and election have been incorporated into this action.

3. ☑ The allowed claim(s) is/are 1-30 . As a result of the allowed claim(s), you may be eligible to benefit from the **Patent Prosecution Highway** program at a participating intellectual property office for the corresponding application. For more information, please see **http://www.uspto.gov/patents/init_events/pph/index.jsp** or send an inquiry to **PPHfeedback@uspto.gov.**

4. ☐ Acknowledgment is made of a claim for foreign priority under 35 U.S.C. § 119(a)-(d) or (f).

   Certified copies:

   a) ☐ All b) ☐ Some *c) ☐ None of the:

   1. ☐ Certified copies of the priority documents have been received.
   2. ☐ Certified copies of the priority documents have been received in Application No. _____ .
   3. ☐ Copies of the certified copies of the priority documents have been received in this national stage application from the International Bureau (PCT Rule 17.2(a)).

   * Certified copies not received: _____ .

Applicant has THREE MONTHS FROM THE "MAILING DATE" of this communication to file a reply complying with the requirements noted below. Failure to timely comply will result in ABANDONMENT of this application.
THIS THREE-MONTH PERIOD IS NOT EXTENDABLE.

5. ☐ CORRECTED DRAWINGS (as "replacement sheets") must be submitted.
   ☐ including changes required by the attached Examiner's Amendment / Comment or in the Office action of Paper No./Mail Date _____ .

   Identifying indicia such as the application number (see 37 CFR 1.84(c)) should be written on the drawings in the front (not the back) of each sheet. Replacement sheet(s) should be labeled as such in the header according to 37 CFR 1.121(d).

6. ☐ DEPOSIT OF and/or INFORMATION about the deposit of BIOLOGICAL MATERIAL must be submitted. Note the attached Examiner's comment regarding REQUIREMENT FOR THE DEPOSIT OF BIOLOGICAL MATERIAL.

Attachment(s)

1. ☑ Notice of References Cited (PTO-892)
2. ☑ Information Disclosure Statements (PTO/SB/08), Paper No./Mail Date _____.
3. ☐ Examiner's Comment Regarding Requirement for Deposit of Biological Material _____.
4. ☐ Interview Summary (PTO-413), Paper No./Mail Date. _____.
5. ☑ Examiner's Amendment/Comment
6. ☑ Examiner's Statement of Reasons for Allowance
7. ☐ Other _____.

/NATHNAEL AYNALEM/
Primary Examiner, Art Unit 2488

Nokia Exhibit 2004, p. 118
Amazon.com v. Nokia
IPR2024-00605

DETAILED ACTION

Notice of Pre-AIA or AIA Status

This is in response to application no. 16/741,156 filed on January 13, 2020. The present application is being examined under the pre-AIA first to invent provisions.

EXAMINER'S AMENDMENT

An examiner's amendment to the record appears below. Should the changes and/or additions be unacceptable to applicant, an amendment may be filed as provided by 37 CFR 1.312. To ensure consideration of such an amendment, it MUST be submitted no later than the payment of the issue fee.

Authorization for this examiner's amendment was given in an interview with Guy Gosnell (Reg. No. 34610) on February 24, 2021.

Please amend claims 1, 9, 15, 23, 29 and 30 filed on January 13, 2020 as follows:

Claim 1 (lines 13-14) "determining to include or exclude the first spatial motion vector prediction ~~candiate~~ candidate in the motion vector prediction list based on the comparing"

Claim 9 (lines 11-12) "determining to include or exclude the first spatial motion vector prediction ~~candiate~~ candidate in the motion vector prediction list based on the comparing"

Claim 15 (lines 11-14) "determine to include or exclude the first spatial motion vector prediction ~~candiate~~ candidate in the motion vector prediction list based on comparison of the

motion information of the first spatial motion vector candidate with motion information of the spatial motion vector prediction candidate"

Claim 23 (lines 13-16) "determine to include or exclude the first spatial motion vector prediction ~~candiate~~ candidate in the motion vector prediction list based on comparison of the motion information of the first spatial motion vector candidate with motion information of the spatial motion vector prediction candidate"

Claim 29 (lines 14-15) "determining to include or exclude the first spatial motion vector prediction ~~candiate~~ candidate in the motion vector prediction list based on the comparing"

Claim 30 (lines 12-13) "determining to include or exclude the first spatial motion vector prediction ~~candiate~~ candidate in the motion vector prediction list based on the comparing"

Allowable Subject Matter

Claims 1-30 are allowed.

The following is an examiner's statement of reasons for allowance:

Regarding claim 1, Lee et al. (Pub. No. US 2011/0170602 A1) a method comprising: selecting a first spatial motion vector prediction candidate (**¶0120-encoding a motion vector predictor, which can be selected by the prediction unit 910**) from a set of spatial motion vector prediction candidates for a block of pixels as a potential spatial motion vector prediction candidate to be included in a motion vector prediction list for a prediction unit of the block of pixels (**See for example Figs. 10A and 10B, motion vector predictor candidates of**

previously encoded blocks a0, a1, a2..an and b0, b1, b2…bn located adjacent to the current block, ¶¶0121-0125).

Lin et al (Pub. No. US 2012/0134416 A1) discloses where the motion vector prediction list comprises motion information of the spatial motion vector prediction candidates and is utilized to identify motion vector prediction candidates of which one spatial motion vector prediction candidate from the motion vector prediction list is signaled as the motion information for the prediction unit (**¶0019-the Inter and Skip modes utilize an Advanced Motion Vector Prediction (AMVP) algorithm to select one final motion vector predictor (MVP) within a candidate set of MVPs…The index of the selected MVP is transmitted);**and causing information identifying the one spatial motion vector prediction candidate from the motion vector prediction list to be transmitted to a decoder or to be stored (**¶0019-the reference index is explicitly transmitted to the decoder**).

Jung et al. "CE9: Summary report of core experiment 9 on MV Coding and Skip/Merge operations" Joint Collaborative Team on Video Coding (JCT-VC) of ITU-T SG16 WP3 and ISO/IEC JTC1/SC29/WG11 5th Meeting: Geneva, CH, 16-23 March, 2011, Document: JCTVC-E029 discloses comparing motion information of the first spatial motion vector prediction candidate with motion information of spatial motion vector prediction candidates in a subset of spatial motion vector prediction candidates that are based on a location of the block associated with the first spatial motion vector prediction candidate (**Page 5: section 4.2, Fig. 3.1.3a: the spatial MVP candidates (left, upper) of the current prediction unit (PU) are calculated from the motion vectors of its neighboring PUs, and has the following steps: 1. MVP candidate from left neighbors: Scanning the left neighbors (PU) from bottom to top (A0 … Am,Am+1;**

maximum 17 Pus), find the first PU that meets the following conditions:…It uses the same reference index… 2. MVP candidate from upper neighbors:…It is not same to left predictor).

However, none of the cited prior arts either singularly or in combination teach the feature of "determining to include or exclude the first spatial motion vector prediction candidate in the motion vector prediction list *based on the comparing*," as recited in claim 1 and similarly recited in claims 9, 15, 23, 29 and 30.

The rest of the dependent claims are allowed by virtue of their dependency from allowed claims 1, 9, 15 and 23.

The additional prior arts (See PTO-892) are cited as relevant prior arts. The pertinent prior arts fail to teach the above identified feature of claims 1, 9, 15, 23, 29 and 30.

Any comments considered necessary by applicant must be submitted no later than the payment of the issue fee and, to avoid processing delays, should preferably accompany the issue fee. Such submissions should be clearly labeled "Comments on Statement of Reasons for Allowance."

Conclusion

Any inquiry concerning this communication or earlier communications from the examiner should be directed to NATHNAEL AYNALEM whose telephone number is (571)270-1482. The examiner can normally be reached on M-F 9AM-5:30 PM ET.

Examiner interviews are available via telephone, in-person, and video conferencing using a USPTO supplied web-based collaboration tool. To schedule an interview, applicant is

encouraged to use the USPTO Automated Interview Request (AIR) at http://www.uspto.gov/interviewpractice.

If attempts to reach the examiner by telephone are unsuccessful, the examiner's supervisor, SATH PERUNGAVOOR can be reached on 571-272-7455. The fax phone number for the organization where this application or proceeding is assigned is 571-273-8300.

Information regarding the status of an application may be obtained from the Patent Application Information Retrieval (PAIR) system. Status information for published applications may be obtained from either Private PAIR or Public PAIR. Status information for unpublished applications is available through Private PAIR only. For more information about the PAIR system, see https://ppair-my.uspto.gov/pair/PrivatePair. Should you have questions on access to the Private PAIR system, contact the Electronic Business Center (EBC) at 866-217-9197 (toll-free). If you would like assistance from a USPTO Customer Service Representative or access to the automated information system, call 800-786-9199 (IN USA OR CANADA) or 571-272-1000.

/NATHNAEL AYNALEM/
Primary Examiner, Art Unit 2488

Notice of References Cited	Application/Control No. 16/741,156	Applicant(s)/Patent Under Reexamination BICI et al.	
	Examiner NATHNAEL AYNALEM	Art Unit 2488	Page 1 of 1

U.S. PATENT DOCUMENTS

*		Document Number Country Code-Number-Kind Code	Date MM-YYYY	Name	CPC Classification	US Classification
*	A	US-20110170602-A1	07-2011	LEE; Tammy	H04N19/70	375/240.16
*	B	US-20120134416-A1	05-2012	Lin; Jian-Liang	H04N19/52	375/240.16
*	C	US-20120263235-A1	10-2012	SUGIO; Toshiyasu	H04N19/105	375/240.16
*	D	US-20120263231-A1	10-2012	Zhou; Minhua	H04N19/105	375/240.12
	E					
	F					
	G					
	H					
	I					
	J					
	K					
	L					
	M					

FOREIGN PATENT DOCUMENTS

*		Document Number Country Code-Number-Kind Code	Date MM-YYYY	Country	Name	CPC Classification
	N					
	O					
	P					
	Q					
	R					
	S					
	T					

NON-PATENT DOCUMENTS

*		Include as applicable: Author, Title Date, Publisher, Edition or Volume, Pertinent Pages)
	U	Jung et al. “CE9: Summary report of core experiment 9 on MV Coding and Skip/Merge operations” Joint Collaborative Team on Video Coding (JCT-VC) of ITU-T SG16 WP3 and ISO/IEC JTC1/SC29/WG11 5th Meeting: Geneva, CH, 16-23 March 2011, Document: JCTVC-E029, 11 pages. (Year: 2011)
	V	Zheng et al. "CE9: Unified Merge and AMVP candidates selection (UNI03)" Joint Collaborative Team on Video Coding (JCT-VC) of ITU-T SG16 WP3 and ISO/IEC JTC1/SC29/WG11 6th Meeting: Torino, IT, 14-22 July, 2011, Document: JCTVC-F297, 11 Pages. (Year: 2011)
	W	
	X	

*A copy of this reference is not being furnished with this Office action. (See MPEP § 707.05(a).)
Dates in MM-YYYY format are publication dates. Classifications may be US or foreign.

Nokia Exhibit 2004, p. 124
Amazon.com v. Nokia
IPR2024-00605

Search Notes	Application/Control No.	Applicant(s)/Patent Under Reexamination
	16/741,156	BICI et al.
	Examiner	**Art Unit**
	NATHNAEL AYNALEM	2488

CPC - Searched*		
Symbol	**Date**	**Examiner**
H04N19/51 , H04N19/513 , H04N19/50 , H04N19/517 , H04N19/52 , H04N19/10 , H04N19/103 , H04N19/107 , H04N19/109 , H04N19/11 , H04N19/33 , H04N19/31 , H04N19/503 , H04N19/428 , H04N19/55 , H04N19/593 , H04N19/59	02/24/2021	NA

CPC Combination Sets - Searched*		
Symbol	**Date**	**Examiner**

US Classification - Searched*			
Class	**Subclass**	**Date**	**Examiner**
375	240.01-240.29	02/24/2021	NA

* See search history printout included with this form or the SEARCH NOTES box below to determine the scope of the search.

Search Notes		
Search Notes	**Date**	**Examiner**
Inventor's name search on PE2E, see attached	02/16/2021	NA
Assignee search on PE2E, see attached	02/16/2021	NA
The above CPC symbols and the US classification are further limited by a text search on PE2E search, see attached	02/23/2021	NA
NPL search on ip.com, see attached	02/23/2021	NA
NPL search from JCT-VC document management system	02/23/2021	NA

Nokia Exhibit 2004, p. 125
Amazon.com v. Nokia
IPR2024-00605

Search Notes	Application/Control No.	Applicant(s)/Patent Under Reexamination
	16/741,156	BICI et al.
	Examiner	**Art Unit**
	NATHNAEL AYNALEM	2488

Interference Search			
US Class/CPC Symbol	**US Subclass/CPC Group**	**Date**	**Examiner**
	Interference search of the claims (USPGPUB, USPAT)	02/24/2021	NA

Nokia Exhibit 2004, p. 126
Amazon.com v. Nokia
IPR2024-00605

Issue Classification	Application/Control No.	Applicant(s)/Patent Under Reexamination
	16/741,156	BICI et al.
	Examiner	**Art Unit**
	NATHNAEL AYNALEM	2488

CPC						
Symbol					**Type**	**Version**
H04N	/	19	/	521	F	2014-11-01
H04N	/	19	/	52	I	2014-11-01
H04N	/	19	/	176	A	2014-11-01
H04N	/	19	/	182	A	2014-11-01

CPC Combination Sets								
Symbol					**Type**	**Set**	**Ranking**	**Version**
	/		/					

NONE (Assistant Examiner)	(Date)	**Total Claims Allowed:** 30	
/NATHNAEL AYNALEM/ Primary Examiner, Art Unit 2488 (Primary Examiner)	24 February 2021 (Date)	O.G. Print Claim(s) 1	O.G. Print Figure 1

U.S. Patent and Trademark Office

Part of Paper No.: 20210224

Nokia Exhibit 2004, p. 127
Amazon.com v. Nokia
IPR2024-00605

Issue Classification	Application/Control No.	Applicant(s)/Patent Under Reexamination
	16/741,156	BICI et al.
	Examiner	**Art Unit**
	NATHNAEL AYNALEM	2488

INTERNATIONAL CLASSIFICATION				
CLAIMED				
H04N19/513	/	19	/	513
H04N19/52	/	19	/	52
H04N19/176	/	19	/	176
H04N19/182	/	19	/	182

NON-CLAIMED				
	/		/	

US ORIGINAL CLASSIFICATION	
CLASS	**SUBCLASS**

CROSS REFERENCES(S)						
CLASS	**SUBCLASS (ONE SUBCLASS PER BLOCK)**					

NONE (Assistant Examiner) (Date)		**Total Claims Allowed:** 30	
/NATHNAEL AYNALEM/ Primary Examiner, Art Unit 2488 (Primary Examiner)	24 February 2021 (Date)	O.G. Print Claim(s) 1	O.G. Print Figure 1

U.S. Patent and Trademark Office

Part of Paper No.: 20210224

Nokia Exhibit 2004, p. 128
Amazon.com v. Nokia
IPR2024-00605

Issue Classification	Application/Control No.	Applicant(s)/Patent Under Reexamination
	16/741,156	BICI et al.
	Examiner	**Art Unit**
	NATHNAEL AYNALEM	2488

☑ Claims renumbered in the same order as presented by applicant ☐ CPA ☑ T.D. ☐ R.1.47

CLAIMS

Final	Original	Final	Original	Final	Original	Final	Original	Final	Original	Final	Original	Final	Original	Final	Original

NONE (Assistant Examiner) (Date)	**Total Claims Allowed:** 30	
/NATHNAEL AYNALEM/ Primary Examiner, Art Unit 2488 (Primary Examiner) (Date) 24 February 2021	O.G. Print Claim(s) 1	O.G. Print Figure 1

U.S. Patent and Trademark Office Part of Paper No.: 20210224

Nokia Exhibit 2004, p. 129
Amazon.com v. Nokia
IPR2024-00605

Bibliographic Data

Application No: 16/741,156

Foreign Priority claimed: ○ Yes ◉ No

35 USC 119 (a-d) conditions met: ☐ Yes ☐ No ☐ Met After Allowance

Verified and Acknowledged: /NATHNAEL AYNALEM/ [ ]

Examiner's Signature Initials

Title: METHOD FOR CODING AND AN APPARATUS

FILING or 371(c) DATE	CLASS	GROUP ART UNIT	ATTORNEY DOCKET NO.
01/13/2020 **RULE**	375	2488	042933/542643

APPLICANTS

NOKIA TECHNOLOGIES OY, Espoo, FINLAND

INVENTORS

Mehmet Oguz BICI, Tampere, FINLAND

Jani LAINEMA, Tampere, FINLAND

Kemal UGUR, Tampere, FINLAND

CONTINUING DATA

This application is a CON of 16356733 03/18/2019 PAT 10536714

16356733 is a CON of 15681725 08/21/2017 PAT 10237574

15681725 is a CON of 15426822 02/07/2017 PAT 9743105

15426822 is a CON of 13666680 11/01/2012 PAT 9571833

13666680 has PRO of 61555703 11/04/2011

FOREIGN APPLICATIONS

IF REQUIRED, FOREIGN LICENSE GRANTED**

01/31/2020

STATE OR COUNTRY

FINLAND

ADDRESS

Nokia Corporation and Alston & Bird LLP
c/o Alston & Bird LLP
One South at The Plaza, 101 South Tryon Street
Suite 4000
Charlotte, NC 28280-4000
UNITED STATES

FILING FEE RECEIVED

$4,100

Main Concept Text
==========
Conditions for deciding whether a candidate is to be included in the list can include motion information comparison with any subset of the candidates as long as not all possible candidate pairs are compared eventually. when comparing the block and the block A1, all the blocks between the block B2 and the block A1 are checked whether they have the same motion; and when comparing the block B2 and the block B1, all the blocks between the block B2 and the block B1 are checked whether they have the same motion.

(No Concept Modifiers)
==========

(No Filters)
==========

Options
=======
De-dup: None
Cut-off: None
Sort: Relevance

Content: Non-Patent Literature (24)
==========
IEEE Xplore Publications: IEEE Periodicals
IEEE Xplore Publications: IEEE Conferences
IEEE Xplore Publications: IEEE Standards
IEEE Xplore Publications: IEEE Early Access
IEEE Xplore Publications: SMPTE Periodicals
IEEE Xplore Publications: SMPTE Conferences
IEEE Xplore Publications: SMPTE Standards
IEEE Xplore Publications: MIT Press eBooks
IEEE Xplore Publications: Wiley-IEEE eBooks
IEEE Xplore Publications: IBM Periodicals
IEEE Xplore Publications: URSI Periodicals
IEEE Xplore Publications: VDE Conferences
IEEE Xplore Publications: Periodicals from China
IP.com Prior Art Database: The IP.com Journal
IP.com Prior Art Database: Internet Society RFC
IP.com Prior Art Database: IBM TDB Archive
IP.com Prior Art Database: Legacy Journals
IP.com Prior Art Database: Software Patent Institute
OnePetro.org: Periodicals at OnePetro.org
OnePetro.org: Conferences at OnePetro.org

Nokia Exhibit 2004, p. 132
Amazon.com v. Nokia
IPR2024-00605

OnePetro.org: Standards at OnePetro.org
Other Literature: IBM Redbooks
Other Literature: PubMed Central
Other Literature: arXiv.org

Nokia Exhibit 2004, p. 133
Amazon.com v. Nokia
IPR2024-00605

PE2E SEARCH - Search History (Prior Art)

Ref #	Hits	Search Query	DBs	Default Operator	Plurals	British Equivalents	Time Stamp
L1	3047	((("NOKIA") near3 ("TECHNOLOGIES") near3 ("OY"))).AS,AANM.	USPAT	OR	ON	ON	2021/02/16 04:39 PM
L2	247	((("BICI") near3 ("Mehmet")) OR (("LAINEMA") near3 ("Jani")) OR (("UGUR") near3 ("Kemal"))).INV.	US-PGPUB; USPAT; USOCR; EPO; JPO; DERWENT	OR	ON	ON	2021/02/16 04:40 PM
L3	2040	(select$ OR choos$ OR elect$) WITH (smvp OR mvp$ OR motion adj5 vector OR pedict$) WITH candidate SAME (includ$ OR add$) WITH candidate WITH (list OR set$)	US-PGPUB; USPAT; USOCR; EPO; JPO; DERWENT	OR	ON	ON	2021/02/16 04:40 PM
L4	11165	compar$ WITH (block$1) SAME (include OR add) WITH (list$ OR set)	US-PGPUB; USPAT; USOCR; EPO; JPO; DERWENT	OR	ON	ON	2021/02/16 04:41 PM
L6	10307	compar$3 WITH block$1 SAME (includ$ OR add) WITH list$3	US-PGPUB; USPAT; USOCR; FIT (AU, AP, AT, CA, CH, CN, DD, DE, EA, EP, ES, FR, GB, JP, KR, OA, RU, SU, WO); FPRS; EPO; JPO; DERWENT; IBM_TDB	OR	ON	ON	2021/02/19 11:51 AM
L7	3463	compar$3 WITH block$1 SAME (includ$ OR add) WITH list$3	US-PGPUB; USPAT; USOCR; FPRS; EPO; JPO; DERWENT; IBM_TDB	OR	ON	ON	2021/02/19 12:03 PM
L8	184	compar$3 WITH (mvp$1 OR vector) WITH (spatial$3 OR intra) WITH candidate	US-PGPUB; USPAT; USOCR; FPRS; EPO; JPO; DERWENT; IBM_TDB	OR	ON	ON	2021/02/19 12:08 PM
L9	11225	merg$3 near5 mode	US-PGPUB; USPAT; USOCR; FPRS; EPO; JPO; DERWENT; IBM_TDB	OR	ON	ON	2021/02/19 12:09 PM
L10	67	8 AND 9	US-PGPUB; USPAT; USOCR; EPO; JPO; DERWENT	OR	ON	ON	2021/02/19 12:11 PM

L11	399	(compar$3 OR comparison) WITH (mvp$1 OR vector) WITH candidate SAME (spatial$3 OR intra)	US-PGPUB; USPAT; USOCR; FPRS; EPO; JPO; DERWENT; IBM_TDB	OR	ON	ON	2021/02/19 12:22 PM
L12	67	10 AND 11	US-PGPUB; USPAT; USOCR; FPRS; EPO; JPO; DERWENT; IBM_TDB	OR	ON	ON	2021/02/19 12:23 PM
L17	10530	merg$3 WITH candidate$1	US-PGPUB; USPAT; USOCR; EPO; JPO; DERWENT	OR	ON	ON	2021/02/19 02:48 PM
L18	8754	("same" OR similar2 OR identical$2) WITH (motion OR mvp$2 OR mv OR index OR indice$1) SAME (left OR top OR neighbour$ OR adjacent) WITH (block$1 OR macroblock$1 OR pu OR cu OR pedict$3 OR coding adj5 unit$1)	US-PGPUB; USPAT; USOCR; EPO; JPO; DERWENT	OR	ON	ON	2021/02/19 02:53 PM
L19	1599	17 AND 18	US-PGPUB; USPAT; USOCR; EPO; JPO; DERWENT	OR	ON	ON	2021/02/19 02:53 PM
L20	1825044	(add$ OR includ$3) WITH list$3	US-PGPUB; USPAT; USOCR; EPO; JPO; DERWENT	OR	ON	ON	2021/02/19 02:54 PM
L22	504	18 SAME 20	US-PGPUB; USPAT; USOCR; EPO; JPO; DERWENT	OR	ON	ON	2021/02/19 02:55 PM
L23	340	17 AND 22	US-PGPUB; USPAT; USOCR; EPO; JPO; DERWENT	OR	ON	ON	2021/02/19 02:56 PM
L24	2697	(compar$ OR comparision) WITH (motion OR mvp$2 OR mv OR index OR indice$1) SAME (left OR top OR neighbour$ OR adjacent) WITH (block$1 OR macroblock$1 OR pu OR cu OR pedict$3 OR coding adj5 unit$1)	US-PGPUB; USPAT; USOCR; EPO; JPO; DERWENT	OR	ON	ON	2021/02/19 03:52 PM
L25	253	9 AND 24	US-PGPUB; USPAT; USOCR; EPO; JPO; DERWENT	OR	ON	ON	2021/02/19 03:53 PM

L26	924	20 AND 25	US-PGPUB; USPAT; USOCR; FIT (AU, AP, AT, CA, CH, CN, DD, DE, EA, EP, ES, FR, GB, JP, KR, OA, RU, SU, WO); FPRS; EPO; JPO; DERWENT; IBM_TDB	OR	ON	ON	2021/02/19 03:54 PM
L27	6512755	(add$ OR includ$3) WITH (list$3 OR set)	US-PGPUB; USPAT; USOCR; EPO; JPO; DERWENT	OR	ON	ON	2021/02/19 04:06 PM
L28	208	24 SAME 27	US-PGPUB; USPAT; USOCR; EPO; JPO; DERWENT	OR	ON	ON	2021/02/19 04:06 PM
L29	17962	(merg$3 OR skip$3) adj5 mode	US-PGPUB; USPAT; USOCR; EPO; JPO; DERWENT	OR	ON	ON	2021/02/19 04:07 PM
L30	116	28 AND 29	US-PGPUB; USPAT; USOCR; EPO; JPO; DERWENT	OR	ON	ON	2021/02/19 04:07 PM
L31	23717	(determin$3 OR check$3 OR decid$ OR decision) WITH (add$ OR includ$3 OR exclud$) WITH (candidate$1) WITH (list$3 OR set)	US-PGPUB; USPAT; USOCR; EPO; JPO; DERWENT	OR	ON	ON	2021/02/19 04:35 PM
L32	1052222	("same" OR similar$3 OR identical$2 OR different) WITH (motion OR mvp$2 OR mv OR index OR indice$1)	US-PGPUB; USPAT; USOCR; EPO; JPO; DERWENT	OR	ON	ON	2021/02/19 04:36 PM
L33	1366	31 SAME 32	US-PGPUB; USPAT; USOCR; EPO; JPO; DERWENT	OR	ON	ON	2021/02/19 04:37 PM
L34	2642	29 AND 33	US-PGPUB; USPAT; USOCR; FIT (AU, AP, AT, CA, CH, CN, DD, DE, EA, EP, ES, FR, GB, JP, KR, OA, RU, SU, WO); FPRS; EPO; JPO; DERWENT; IBM_TDB	OR	ON	ON	2021/02/19 04:37 PM
L35	804	29 AND 33	US-PGPUB; USPAT; USOCR; FPRS; EPO; JPO; DERWENT; IBM_TDB	OR	ON	ON	2021/02/19 04:38 PM
L36	92175	(select$5 OR choos$3 OR pick$3 OR elect$3 OR	US-PGPUB; USPAT; USOCR; FPRS; EPO;	OR	ON	ON	2021/02/19 04:55 PM

		decid$3 OR choice$1 OR chosen OR specify$3) WITH candidate$1 WITH (list$3 OR set$3)	JPO; DERWENT; IBM_TDB				
L37	648	36 AND 35	US-PGPUB; USPAT; USOCR; FPRS; EPO; JPO; DERWENT; IBM_TDB	OR	ON	ON	2021/02/19 04:55 PM
L39	95286	(motion OR mvp$2 OR mv OR index OR indice$1) SAME (left OR top OR neighbour$ OR adjacent OR above) WITH (block$1 OR macroblock$1 OR pu OR cu OR pedict$3 OR coding adj5 unit$1 OR mvp$1)	US-PGPUB; USPAT; USOCR; EPO; JPO; DERWENT	OR	ON	ON	2021/02/19 05:21 PM
L40	19326	32 SAME 39	US-PGPUB; USPAT; USOCR; EPO; JPO; DERWENT	OR	ON	ON	2021/02/19 05:22 PM
L41	2976	36 AND 40	US-PGPUB; USPAT; USOCR; EPO; JPO; DERWENT	OR	ON	ON	2021/02/19 05:22 PM
L42	1976	29 AND 41	US-PGPUB; USPAT; USOCR; EPO; JPO; DERWENT	OR	ON	ON	2021/02/19 05:22 PM
L43	26762	(select$5 OR choos$3 OR pick$3 OR elect$3 OR decid$3 OR choice$1 OR chosen OR specify$3) WITH (includ$ OR add$3) WITH candidate$1 WITH (list$3 OR set$3)	US-PGPUB; USPAT; USOCR; FPRS; EPO; JPO; DERWENT; IBM_TDB	OR	ON	ON	2021/02/19 06:15 PM
L44	123281	(spatial$3 OR intra) WITH (motion OR vector OR mv$2)	US-PGPUB; USPAT; USOCR; FPRS; EPO; JPO; DERWENT; IBM_TDB	OR	ON	ON	2021/02/19 06:17 PM
L46	914	43 SAME 44	US-PGPUB; USPAT; USOCR; FPRS; EPO; JPO; DERWENT; IBM_TDB	OR	ON	ON	2021/02/19 06:17 PM
L47	711	29 AND 46	US-PGPUB; USPAT; USOCR; FPRS; EPO; JPO; DERWENT; IBM_TDB	OR	ON	ON	2021/02/19 06:30 PM

L49	163936	((H04N19/51 OR H04N19/513 OR H04N19/50 OR H04N19/517 OR H04N19/52 OR H04N19/10 OR H04N19/103 OR H04N19/107 OR H04N19/109 OR H04N19/11 OR H04N19/33 OR H04N19/31 OR H04N19/503 OR H04N19/428 OR H04N19/55 OR H04N19/593 OR H04N19/59).cpc. OR (375/240.01-240.29).ccls.)	US-PGPUB; USPAT; USOCR; FPRS; EPO; JPO; DERWENT; IBM_TDB	OR	ON	ON	2021/02/19 06:40 PM
L50	774	46 AND 49	US-PGPUB; USPAT; USOCR; FPRS; EPO; JPO; DERWENT; IBM_TDB	OR	ON	ON	2021/02/19 06:40 PM
L51	77934	(add$ OR includ$3 OR exclud$) WITH (candidate$1) WITH (list$3 OR set)	US-PGPUB; USPAT; USOCR; EPO; JPO; DERWENT	OR	ON	ON	2021/02/22 12:32 PM
L52	3400	32 SAME 51	US-PGPUB; USPAT; USOCR; EPO; JPO; DERWENT	OR	ON	ON	2021/02/22 12:33 PM
L53	934	39 SAME 52	US-PGPUB; USPAT; USOCR; EPO; JPO; DERWENT	OR	ON	ON	2021/02/22 12:33 PM
L54	862	49 AND 53	US-PGPUB; USPAT; USOCR; EPO; JPO; DERWENT	OR	ON	ON	2021/02/22 12:34 PM
L55	693	29 AND 54	US-PGPUB; USPAT; USOCR; EPO; JPO; DERWENT	OR	ON	ON	2021/02/22 12:42 PM
L61	1007316	(merg$3 OR skip$3 OR amvp OR adaptive$2 adj7 motion)	US-PGPUB; USPAT; USOCR; EPO; JPO; DERWENT	OR	ON	ON	2021/02/22 02:48 PM
L62	3364	53 AND 61	US-PGPUB; USPAT; USOCR; FIT (AU, AP, AT, CA, CH, CN, DD, DE, EA, EP, ES, FR, GB, JP, KR, OA, RU, SU, WO); FPRS; EPO; JPO; DERWENT; IBM_TDB	OR	ON	ON	2021/02/22 02:49 PM

L63	278381	(compar$3 OR comparison OR equat$ OR evaluat$ OR check$3 OR correlat$3 OR match$3) WITH (motion OR mvp$2 OR mv)	US-PGPUB; USPAT; USOCR; EPO; JPO; DERWENT	OR	ON	ON	2021/02/22 04:32 PM
L64	6555295	(add$ OR includ$3 OR exclud$) WITH (list$3 OR set)	US-PGPUB; USPAT; USOCR; EPO; JPO; DERWENT	OR	ON	ON	2021/02/22 04:32 PM
L65	12266	63 SAME 64	US-PGPUB; USPAT; USOCR; EPO; JPO; DERWENT	OR	ON	ON	2021/02/22 04:33 PM
L66	62294	(spatial$3 OR intra) WITH predict$3	US-PGPUB; USPAT; USOCR; EPO; JPO; DERWENT	OR	ON	ON	2021/02/22 04:33 PM
L67	610	65 SAME 66	US-PGPUB; USPAT; USOCR; EPO; JPO; DERWENT	OR	ON	ON	2021/02/22 04:33 PM
L68	522	61 AND 67	US-PGPUB; USPAT; USOCR; EPO; JPO; DERWENT	OR	ON	ON	2021/02/22 04:34 PM
L69	569658	("same" OR similar$3 OR identical$2 OR different) WITH (motion OR mvp$2 OR mv)	US-PGPUB; USPAT; USOCR; EPO; JPO; DERWENT	OR	ON	ON	2021/02/22 05:06 PM
L70	2446	51 SAME 69	US-PGPUB; USPAT; USOCR; EPO; JPO; DERWENT	OR	ON	ON	2021/02/22 05:06 PM
L71	2287	49 AND 70	US-PGPUB; USPAT; USOCR; FPRS; EPO; JPO; DERWENT; IBM_TDB	OR	ON	ON	2021/02/22 05:07 PM
L72	1853	66 AND 71	US-PGPUB; USPAT; USOCR; EPO; JPO; DERWENT	OR	ON	ON	2021/02/22 05:08 PM
L74	52595	63 SAME 69	US-PGPUB; USPAT; USOCR; EPO; JPO; DERWENT	OR	ON	ON	2021/02/22 06:07 PM
L75	3059	64 SAME 74	US-PGPUB; USPAT; USOCR; EPO; JPO; DERWENT	OR	ON	ON	2021/02/22 06:07 PM
L76	1304	61 AND 75	US-PGPUB; USPAT; USOCR; EPO; JPO; DERWENT	OR	ON	ON	2021/02/22 06:08 PM

L77	768	49 AND 76	US-PGPUB; USPAT; USOCR; EPO; JPO; DERWENT	OR	ON	ON	2021/02/22 06:08 PM
L79	957661	("same" OR similar$3 OR identical$2 OR different) WITH (motion OR mvp$2 OR mv OR vector$2)	US-PGPUB; USPAT; USOCR; EPO; JPO; DERWENT	OR	ON	ON	2021/02/23 11:12 AM
L80	43254	64 SAME 79	US-PGPUB; USPAT; USOCR; EPO; JPO; DERWENT	OR	ON	ON	2021/02/23 11:12 AM
L81	720	49 AND 50	US-PGPUB; USPAT; USOCR; EPO; JPO; DERWENT	OR	ON	ON	2021/02/23 11:13 AM
L86	554861	(transmit$3 OR send$ OR signaling OR signaled) WITH index	US-PGPUB; USPAT; USOCR; FIT (AU, AP, AT, CA, CH, CN, DD, DE, EA, EP, ES, FR, GB, JP, KR, OA, RU, SU, WO); FPRS; EPO; JPO; DERWENT; IBM_TDB	OR	ON	ON	2021/02/23 12:10 PM
L87	1090	81 AND 86	US-PGPUB; USPAT; USOCR; FIT (AU, AP, AT, CA, CH, CN, DD, DE, EA, EP, ES, FR, GB, JP, KR, OA, RU, SU, WO); FPRS; EPO; JPO; DERWENT; IBM_TDB	OR	ON	ON	2021/02/23 12:10 PM
L91	69484	(add$3 OR includ$3 OR exclud$3) WITH (candidate$1) WITH (list$3 OR set)	US-PGPUB; USPAT; USOCR; EPO; JPO; DERWENT	OR	ON	ON	2021/02/23 03:13 PM

PE2E SEARCH - Search History (Interference)

Ref #	Hits	Search Query	DBs	Default Operator	Plurals	British Equivalents	Time Stamp
N1	185	((select$5 OR choos$3 OR pick$3 OR elect$3 OR decid$3 OR choice$1 OR chosen OR specify$3) WITH (motion adj5 vector OR mvp OR mv) WITH candidate$1 WITH (spatial$2 OR intra$)).clm.	US-PGPUB; USPAT	OR	ON	ON	2021/02/24 11:29 AM
N2	1303	((information OR flag OR	US-PGPUB; USPAT	OR	ON	ON	2021/02/24

		index) WITH (motion adj5 vector OR mvp OR mv) WITH (signal$3 OR transmit$4 OR transmission OR send$3)).clm.					11:31 AM
N3	30501	(("same" OR similar2 OR identical$2 OR compar$) WITH (motion OR mvp$2 OR mv)).clm.	US-PGPUB; USPAT	OR	ON	ON	2021/02/24 11:32 AM
N4	5393	((determin$3 OR check$3 OR decid$ OR decision) WITH (add$ OR includ$3 OR exclud$) WITH (candidate$1) WITH (list$3 OR set)).clm.	US-PGPUB; USPAT	OR	ON	ON	2021/02/24 11:32 AM
N5	35	N1 AND N2	US-PGPUB; USPAT	OR	ON	ON	2021/02/24 11:33 AM
N6	236	N3 AND N4	US-PGPUB; USPAT	OR	ON	ON	2021/02/24 11:33 AM
N7	8	N5 AND N6	US-PGPUB; USPAT	OR	ON	ON	2021/02/24 11:33 AM

Substitute for form SB08
(Revised 07/09)

INFORMATION DISCLOSURE STATEMENT BY APPLICANT

(Use as many sheets as necessary)

Complete if Known	
Application Number	16/741,156
Filing Date	January 13, 2020
First Named Inventor	Bici et al.
Art Unit	2488
Examiner Name	
Attorney Docket Number	042933/542643

Sheet	1	of	5

U. S. PATENT DOCUMENTS

Examiner Initials*	Cite No.	Document Number Number - Kind Code (if known)	Publication Date MM-DD-YYYY	Name of Patentee or Applicant of Cited Document	Pages, Columns, Lines, Where Relevant Passages of Relevant Figures Appear
	1	US-2004/0234144 A1	11-25-2004	Sugimoto et al.	
	2	US-2007/0189389 A1	08-16-2007	Boisson et al.	
	3	US-2008/0159401 A1	07-03-2008	Lee et al.	
	4	US-2008/0232642 A1	09-25-2008	Chang	
	5	US-2011/0170602 A1	07-14-2011	Lee et al.	
	6	US-2011/0176013 A1	07-21-2011	Robertson et al.	
	7	US-2011/0176612 A1	07-21-2011	Tsai et al.	
	8	US-2011/0182362 A1	07-28-2011	Kim et al.	
	9	US-2012/0230408 A1	09-13-2012	Zhou	
	10	US-2012/0257678 A1	10-11-2012	Zhou et al.	
	11	US-2012/0269270 A1	10-25-2012	Chen et al.	
	12	US-2012/0300846 A1	11-29-2012	Sugio et al.	
	13	US-2012/0307905 A1	12-06-2012	Kim et al.	
	14	US-2012/0320984 A1	12-20-2012	Zhou	
	15	US-2013/0003850 A1	01-03-2013	Sugio et al.	
	16	US-2013/0004092 A1	01-03-2013	Sasai et al.	
	17	US-2013/0070855 A1	03-21-2013	Zheng et al.	
	18	US-2013/0083853 A1	04-04-2013	Coban et al.	
	19	US-2013/0272408 A1	10-17-2013	Chen et al.	

FOREIGN PATENT DOCUMENTS

Examiner Initials	Cite No.	Foreign Patent Document Country Code - Number Kind Code (if known)	Publication Date MM-DD-YYYY	Name of Patentee or Applicant of Cited Document	Pages, Columns, Lines, Where Relevant Passages or Relevant Figures Appear	English Language Translation Attached
	20	CN 101271580 A	09-24-2008	HIMAX Tech Ltd		

Examiner Signature		Date Considered	

*Examiner: Initial if reference considered, whether or not citation is in conformance with MPEP 609. Draw line through citation if not in conformance and not considered. Include copy of this form with next communication to applicant. LEGAL02/39610222v1

Submitted February 18, 2020

Substitute for form SB08
(Revised 07/09)

INFORMATION DISCLOSURE STATEMENT BY APPLICANT

(Use as many sheets as necessary)

Complete if Known	
Application Number	16/741,156
Filing Date	January 13, 2020
First Named Inventor	Bici et al.
Art Unit	2488
Examiner Name	
Attorney Docket Number	042933/542643

Sheet 2 of 5

FOREIGN PATENT DOCUMENTS

Examiner Initials	Cite No.	Foreign Patent Document Country Code - Number Kind Code (if known)	Publication Date MM-DD-YYYY	Name of Patentee or Applicant of Cited Document	Pages, Columns, Lines, Where Relevant Passages or Relevant Figures Appear	English Language Translation Attached
	21	CN 101605255 B	05-04-2011	Huawei Tech Co Ltd		
	22	CN 1757238 A	04-05-2006	Thomson Licensing		
	23	WO 2011 115659 A1	09-22-2011	Thomson Licensing		
	24	WO 2011/062392 A2	05-26-2011	SK Telecom Co. Ltd.		

OTHER DOCUMENTS

Examiner Initials*	Cite No.	Include name of the author (in CAPITAL LETTERS), title of the article (when appropriate), title of the item (book, magazine, journal, serial, symposium, catalog, etc.), date, page(s), volume-issue number(s), publisher, city and/or country where published.	English Language Translation Attached
	25	Advisory Action for U.S. Patent Application No. 13/666,680 dated November 7, 2016, 4 pages.	
	26	**Bici, O. et al.**, *Non-CE13: Simplification of merge mode*, Joint Collaborative Team on Video Coding (JCT-VC) of ITU-T SG16 WP3 and ISO/IEC JTC1/SC29/WG11, 7th Meeting: Geneva, CH, 21-30 November, 2011, Document JCTVC-G593; URL: HTTP://WFTP3.ITU.INT/AV-ARCH/JCTVC-SITE/, 13 pages	
	27	**Bross, B. et al.**, *Core Experiment 9: MV Coding and Skip/Merge Operations*, Joint Collaborative Team on Video Coding (JCT-VC) of ITU-T SG16 WP3 and ISO/IEC JTC1/SC29/WG11, 6th Meeting, Torino, IT, 14-22 July, 2011; Document JCTVC-F909, 13 pages	
	28	**Bross, Benjamin, et al.**; *"WD4: Working Draft 4 of High-Efficiency Video Coding"*; Joint Collaborative Team on Video Coding (JCT-VC) of ITU-T SG16 WP3 and ISO/IEC JTC1/SC29/WG11; 6th Meeting; Torino, IT; 14-22 July 2011; Document JCTVC-F803_d; 232 pages	
	29	Extended European Search Report for corresponding European Application No. 12845839.5 dated March 21, 2016, 10 pages	
	30	Final Office Action for U.S. Patent Application No. 13/666,680 dated March 1, 2016, 35 pages.	

Examiner Signature		Date Considered	

*Examiner: Initial if reference considered, whether or not citation is in conformance with MPEP 609. Draw line through citation if not in conformance and not considered. Include copy of this form with next communication to applicant. LEGAL02/39610222v1

Submitted February 18, 2020

ALL REFERENCES CONSIDERED EXCEPT WHERE LINED THROUGH. /N.A./

Substitute for form SB08 (Revised 07/09)				Complete if Known	
INFORMATION DISCLOSURE STATEMENT BY APPLICANT *(Use as many sheets as necessary)*				Application Number	16/741,156
				Filing Date	January 13, 2020
				First Named Inventor	Bici et al.
				Art Unit	2488
				Examiner Name	
Sheet	3	of	5	Attorney Docket Number	042933/542643

OTHER DOCUMENTS

Examiner Initials*	Cite No.	Include name of the author (in CAPITAL LETTERS), title of the article (when appropriate), title of the item (book, magazine, journal, serial, symposium, catalog, etc.), date, page(s), volume-issue number(s), publisher, city and/or country where published.	English Language Translation Attached
	31	**Han, Woo-Jin, et al.**; *"Improved Video Compression Efficiency Through Flexible Unit Representation and Corresponding Extension of Coding Tools"*; Circuits and Systems for Video Technology; IEEE Transactions on 20.12 (2010); 1709-1720	
	32	**Huang, Ai-Mei et al.**, *A multistage motion vector processing method for motion-compensated frame interpolation*, Image Processing, IEEE Transactions on 17.5 (2008) 694-708	
	33	International Search Report and Written Opinion from corresponding International Application No. PCT/FI2012/051070, dated March 27, 2013	
	34	**J.-L. Lin, Y.-W. Chen, Y.-W. Huang, S. Lei**; *"CE9: Results of Experiment ROB04"*; JCT-VC Doc. JCTVC-F052, Turin; Jul 2011	
	35	**Jeon, Y. et al.**, *On MVP list pruning process*, Joint Collaborative Team on Video Coding (JCT-VC) of ITU-T SG16 WP3 and ISO/IEC JTC1/SC29/WG11, 6th Meeting, Torino, IT, 14-22 July, 2011, Document JCTVC-F105, 7 pages	
	36	**Nakamura, H. et al.**, *Unification of derivation process for merge mode and MVP*, Joint Collaborative Team on Video Coding (JCT-VC) of ITU-T SG16 WP3 and ISO/IEC JTC1/SC29/WG11, 6th Meeting; Torino, IT, 14-22 July, 2011; Document JCTVC-F419; URL: http://wftp3.itu.int/AV-ARCH/JCTVC-SITE/2011_07_F_Torino/, 10 pages	
	37	Notice of Allowance for U.S. Application No. 15/681,725 dated May 30, 2018	
	38	Notice of Allowance for U.S. Application No. 15/681,725 dated October 25, 2018	
	39	Notice of Allowance for U.S. Application No. 16/356,733 dated August 30, 2019	
	40	Notice of Allowance for U.S. Patent Application No. 13/666,680 dated September 30, 2016, 17 pages.	
	41	Notice of Allowance for U.S. Patent Application No. 15/426,822 dated March 10, 2017, 8 pages	
	42	Office Action for Canadian Application No. 2,854,495 dated September 6, 2016	
	43	Office Action for Chinese Application No. 201280065777.5 dated October25, 2017 with English Translation, 8 pages	

Examiner Signature		Date Considered	

*Examiner: Initial if reference considered, whether or not citation is in conformance with MPEP 609. Draw line through citation if not in conformance and not considered. Include copy of this form with next communication to applicant. LEGAL02/39610222v1

Submitted February 18, 2020

ALL REFERENCES CONSIDERED EXCEPT WHERE LINED THROUGH. /N.A./

Substitute for form SB08
(Revised 07/09)

INFORMATION DISCLOSURE STATEMENT BY APPLICANT
(Use as many sheets as necessary)

Complete if Known	
Application Number	16/741,156
Filing Date	January 13, 2020
First Named Inventor	Bici et al.
Art Unit	2488
Examiner Name	
Attorney Docket Number	042933/542643

Sheet	4	of	5

OTHER DOCUMENTS

Examiner Initials*	Cite No.	Include name of the author (in CAPITAL LETTERS), title of the article (when appropriate), title of the item (book, magazine, journal, serial, symposium, catalog, etc.), date, page(s), volume-issue number(s), publisher, city and/or country where published.	English Language Translation Attached
	44	Office Action for Chinese Application No. 2012800657775 dated October 9, 2016	
	45	Office Action for corresponding Indian Application No. 4092/CHENP/2014 dated April 11, 2018 with English Translation, 7 pages	
	46	Office Action for European Application No. EP 12 845 839.5 dated June 6, 2019, 9 pages	
	47	Office Action for U.S. Application No. 13/666,680 dated March 1, 2016	
	48	Office Action for U.S. Patent Application No. 13/666,680 dated July 6, 2015, 25 pages.	
	49	Office Action for U.S. Patent Application No. 15/681,725 dated September 21, 2017	
	50	Office Action from corresponding Canadian Patent Application No. 2,854,495, dated October 7, 2015	
	51	Office Action from corresponding Korean Patent Application No. 2014-7015093, dated August 21, 2015	
	52	Office Action from Korean Patent Application No. 2014-7015093 dated August 22, 2016	
	53	**Oudin, S. et al.**; *"Block Merging for Quadtree-Based Video Coding"*; IEEE Int. Conf. on Multimedia and Expo; July 11-15; 2011; 6 pages	
	54	**Sullivan, G.J.**; *"Overview of the High Efficiency Video Coding (HEVC) Standard"*; IEEE Trans. On Circuits and Systems for Video Technology; Vol. 22, No. 12; December 2012; pp. 1649-1668	
	55	**Tai, Shen-Chuan, et al.**; *"A Multi-Pass True Motion Estimation Scheme with Motion Vector Propagation for Frame Rate Up-Conversion Applications"*; Journal of Display Technology; 4.2 (2008); 188-197	
	56	Taiwanese Office Action and Search Report from Taiwanese Patent Application No. 101140777 dated December 2, 2015	
	57	**Wiegand, Tomas, et al.**; *"WD3: Working Draft 3 of High-Efficiency Video Coding"*; Joint Collaborative Team on Video Coding (JCT-VC) of ITU-T SG16 WP3 and ISO/IEC JTC1/SC29/WG11; 5th Meeting; Geneva, CH, 16-23 March, 2011; Document JCTVC-E603; 239 pages	

Examiner Signature		Date Considered	

*Examiner: Initial if reference considered, whether or not citation is in conformance with MPEP 609. Draw line through citation if not in conformance and not considered. Include copy of this form with next communication to applicant. LEGAL02/39610222v1

Submitted February 18, 2020

ALL REFERENCES CONSIDERED EXCEPT WHERE LINED THROUGH. /N.A./

Substitute for form SB08 (Revised 07/09)				Complete if Known	
INFORMATION DISCLOSURE STATEMENT BY APPLICANT *(Use as many sheets as necessary)*				Application Number	16/741,156
				Filing Date	January 13, 2020
				First Named Inventor	Bici et al.
				Art Unit	2488
				Examiner Name	
Sheet	5	of	5	Attorney Docket Number	042933/542643

OTHER DOCUMENTS

Examiner Initials*	Cite No.	Include name of the author (in CAPITAL LETTERS), title of the article (when appropriate), title of the item (book, magazine, journal, serial, symposium, catalog, etc.), date, page(s), volume-issue number(s), publisher, city and/or country where published.	English Language Translation Attached
	58	Zheng, Y. et al., *Merge Candidate Selection in 2NxN, Nx2N, and NxN Mode*, Joint Collaborative Team on Video Coding (JCT-VC) of ITU-T SG16 WP3 and ISO/IEC JTC1/SC29/WG11, 6th Meeting, Torino, IT, 14-22 July, 2011; Document JCTVC-F302, 6 pages	

Examiner Signature	/NATHNAEL AYNALEM/	Date Considered	02/26/2021

*Examiner: Initial if reference considered, whether or not citation is in conformance with MPEP 609. Draw line through citation if not in conformance and not considered. Include copy of this form with next communication to applicant. LEGAL02/39610222v1

Submitted February 18, 2020

ALL REFERENCES CONSIDERED EXCEPT WHERE LINED THROUGH. /N.A./

PTO/SB/30EFS (02-18)
Approved for use through 11/30/2020. OMB 0651-0031
U.S. Patent and Trademark Office; U.S. DEPARTMENT OF COMMERCE
Under the Paperwork Reduction Act of 1995, no persons are required to respond to a collection of information unless it contains a valid OMB control number.

REQUEST FOR CONTINUED EXAMINATION(RCE)TRANSMITTAL
(Submitted Only via EFS-Web)

Application Number	16/741,156	Filing Date	2020-01-13	Docket Number (if applicable)	042933/542643	Art Unit	2488
First Named Inventor	Bici et al.			Examiner Name	Nathnael B. Aynalem		

This is a Request for Continued Examination (RCE) under 37 CFR 1.114 of the above-identified application.
Request for Continued Examination (RCE) practice under 37 CFR 1.114 does not apply to any utility or plant application filed prior to June 8, 1995, or to any design application. The Instruction Sheet for this form is located at WWW.USPTO.GOV

SUBMISSION REQUIRED UNDER 37 CFR 1.114

Note: If the RCE is proper, any previously filed unentered amendments and amendments enclosed with the RCE will be entered in the order in which they were filed unless applicant instructs otherwise. If applicant does not wish to have any previously filed unentered amendment(s) entered, applicant must request non-entry of such amendment(s).

☐ Previously submitted. If a final Office action is outstanding, any amendments filed after the final Office action may be considered as a submission even if this box is not checked.

- ☐ Consider the arguments in the Appeal Brief or Reply Brief previously filed on _____
- ☐ Other _____

☒ Enclosed

- ☐ Amendment/Reply
- ☒ Information Disclosure Statement (IDS)
- ☐ Affidavit(s)/ Declaration(s)
- ☐ Other _____

MISCELLANEOUS

☐ Suspension of action on the above-identified application is requested under 37 CFR 1.103(c) for a period of months _____
(Period of suspension shall not exceed 3 months; Fee under 37 CFR 1.17(i) required)

☐ Other _____

FEES

☒ **The RCE fee under 37 CFR 1.17(e) is required by 37 CFR 1.114 when the RCE is filed.**
The Director is hereby authorized to charge any underpayment of fees, or credit any overpayments, to Deposit Account No 160605

SIGNATURE OF APPLICANT, ATTORNEY, OR AGENT REQUIRED

X Patent Practitioner Signature

Applicant Signature

Nokia Exhibit 2004, p. 147
Amazon.com v. Nokia
IPR2024-00605

PTO/SB/30EFS (02-18)
Approved for use through 11/30/2020. OMB 0651-0031
U.S. Patent and Trademark Office; U.S. DEPARTMENT OF COMMERCE
Under the Paperwork Reduction Act of 1995, no persons are required to respond to a collection of information unless it contains a valid OMB control number.

Signature of Registered U.S. Patent Practitioner			
Signature	/Guy R. Gosnell/	Date (YYYY-MM-DD)	2021-06-07
Name	Guy R. Gosnell	Registration Number	34610

This collection of information is required by 37 CFR 1.114. The information is required to obtain or retain a benefit by the public which is to file (and by the USPTO to process) an application. Confidentiality is governed by 35 U.S.C. 122 and 37 CFR 1.11 and 1.14. This collection is estimated to take 12 minutes to complete, including gathering, preparing, and submitting the completed application form to the USPTO. Time will vary depending upon the individual case. Any comments on the amount of time you require to complete this form and/or suggestions for reducing this burden, should be sent to the Chief Information Officer, U.S. Patent and Trademark Office, U.S. Department of Commerce, P.O. Box 1450, Alexandria, VA 22313-1450.

If you need assistance in completing the form, call 1-800-PTO-9199 and select option 2.

Nokia Exhibit 2004, p. 148
Amazon.com v. Nokia
IPR2024-00605

Privacy Act Statement

The Privacy Act of 1974 (P.L. 93-579) requires that you be given certain information in connection with your submission of the attached form related to a patent application or patent. Accordingly, pursuant to the requirements of the Act, please be advised that: (1) the general authority for the collection of this information is 35 U.S.C. 2(b)(2); (2) furnishing of the information solicited is voluntary; and (3) the principal purpose for which the information is used by the U.S. Patent and Trademark Office is to process and/or examine your submission related to a patent application or patent. If you do not furnish the requested information, the U.S. Patent and Trademark Office may not be able to process and/or examine your submission, which may result in termination of proceedings or abandonment of the application or expiration of the patent.

The information provided by you in this form will be subject to the following routine uses:

1. The information on this form will be treated confidentially to the extent allowed under the Freedom of Information Act (5 U.S.C. 552) and the Privacy Act (5 U.S.C. 552a). Records from this system of records may be disclosed to the Department of Justice to determine whether the Freedom of Information Act requires disclosure of these records.

2. A record from this system of records may be disclosed, as a routine use, in the course of presenting evidence to a court, magistrate, or administrative tribunal, including disclosures to opposing counsel in the course of settlement negotiations.

3. A record in this system of records may be disclosed, as a routine use, to a Member of Congress submitting a request involving an individual, to whom the record pertains, when the individual has requested assistance from the Member with respect to the subject matter of the record.

4. A record in this system of records may be disclosed, as a routine use, to a contractor of the Agency having need for the information in order to perform a contract. Recipients of information shall be required to comply with the requirements of the Privacy Act of 1974, as amended, pursuant to 5 U.S.C. 552a(m).

5. A record related to an International Application filed under the Patent Cooperation Treaty in this system of records may be disclosed, as a routine use, to the International Bureau of the World Intellectual Property Organization, pursuant to the Patent Cooperation Treaty.

6. A record in this system of records may be disclosed, as a routine use, to another federal agency for purposes of National Security review (35 U.S.C. 181) and for review pursuant to the Atomic Energy Act (42 U.S.C. 218(c)).

7. A record from this system of records may be disclosed, as a routine use, to the Administrator, General Services, or his/her designee, during an inspection of records conducted by GSA as part of that agency's responsibility to recommend improvements in records management practices and programs, under authority of 44 U.S.C. 2904 and 2906. Such disclosure shall be made in accordance with the GSA regulations governing inspection of records for this purpose, and any other relevant (i.e., GSA or Commerce) directive. Such disclosure shall not be used to make determinations about individuals.

8. A record from this system of records may be disclosed, as a routine use, to the public after either publication of the application pursuant to 35 U.S.C. 122(b) or issuance of a patent pursuant to 35 U.S.C. 151. Further, a record may be disclosed, subject to the limitations of 37 CFR 1.14, as a routine use, to the public if the record was filed in an application which became abandoned or in which the proceedings were terminated and which application is referenced by either a published application, an application open to public inspections or an issued patent.

9. A record from this system of records may be disclosed, as a routine use, to a Federal, State, or local law enforcement agency, if the USPTO becomes aware of a violation or potential violation of law or regulation.

Nokia Exhibit 2004, p. 149
Amazon.com v. Nokia
IPR2024-00605

IN THE UNITED STATES PATENT AND TRADEMARK OFFICE

In re:	Bici et al.	Confirmation No.:	3751
Appl. No.:	16/741,156	Group Art Unit:	2488
Filed:	January 13, 2020	Examiner:	Nathnael B. Aynalem
For:	METHOD FOR CODING AND AN APPARATUS		

Submitted via EFS-Web
Commissioner for Patents
P.O. Box 1450
Alexandria, VA 22313-1450

SUPPLEMENTAL INFORMATION DISCLOSURE STATEMENT
CITATION UNDER 37 C.F.R. § 1.97

Attached is a list of documents on form PTO-SB08. Copies of all listed documents (other than U.S. patents, U.S. patent application publications, or patents or publications otherwise determined cumulative) are attached, except those (if any) that were previously submitted to, or cited by, the Office during the prosecution of any application(s) upon which the present application directly relies for an earlier effective filing date under 35 U.S.C. § 120. It is noted that 37 C.F.R. § 1.98(d) establishes that copies of documents previously submitted to, or cited by, the Office during prosecution of the above application(s) are not required to be furnished; however, copies of such documents will be furnished upon request. Also attached is a translation or a concise explanation of each non-English language document.

It is requested that the Examiner consider these documents and officially make them of record in accordance with the provisions of 37 C.F.R. § 1.97 and Section 609 of the MPEP. By identifying the listed documents, Applicant in no way makes any admission as to the prior art status of the listed documents but is instead identifying the listed documents for the sake of full disclosure.

Respectfully submitted,

/Guy R. Gosnell/

Guy R. Gosnell
Registration No. 34,610

Customer No. 10949
ALSTON & BIRD LLP
Bank of America Plaza
101 South Tryon Street, Suite 4000
Charlotte, NC 28280-4000
Tel Charlotte Office (704) 444-1000
Fax Charlotte Office (704) 444-1111

Nokia Exhibit 2004, p. 150
Amazon.com v. Nokia
IPR2024-00605

Substitute for form SB08 (Revised 07/09)				Complete if Known	
INFORMATION DISCLOSURE STATEMENT BY APPLICANT *(Use as many sheets as necessary)*				Application Number	16/741,156
				Filing Date	January 13, 2020
				First Named Inventor	Bici et al.
				Art Unit	2488
				Examiner Name	Nathnael B. Aynalem
Sheet	1	of	3	Attorney Docket Number	042933/542643

U. S. PATENT DOCUMENTS

Examiner Initials*	Cite No.	Document Number Number – Kind Code (if known)	Publication Date MM-DD-YYYY	Name of Patentee or Applicant of Cited Document	Pages, Columns, Lines, Where Relevant Passages of Relevant Figures Appear
	1	US-2011/0176615 A1	07-21-2011	Lee et al.	
	2	US-2011/0194608 A1	08-11-2011	Rusert et al.	
	3	US-2012/0044990 A1	02-23-2012	Bivolarsky et al.	
	4	US-2012/0128060 A1	05-24-2012	Lin et al.	
	5	US-2012/0269268 A1	10-25-2012	Kim et al.	
	6	US-2013/0077871 A1	03-28-2013	Lu et al.	
	7	US-5,428,403	06-27-1995	Andrew et al.	
	8	US-5,594,504	01-14-1997	Ebrahimi	
	9	US-6,040,863	03-21-2000	Kato	
	10	US-6,567,469	05-20-2003	Rackett	
	11	US-7,852,938	12-14-2010	Shi et al.	
	12	US-8,000,386	08-16-2011	Nicolas	
	13	US-8,369,405	02-05-2013	Shi et al.	
	14	US-8,565,544	10-22-2013	Jeon et al.	
	15	US-8,675,736	03-18-2014	Huang et al.	
	16	US-8,787,459	07-22-2014	Wang	
	17	US-8,913,660	12-16-2014	Tourapis et al.	
	18	US-9,066,104	06-23-2015	Wang et al.	
	19	US-9,137,544	09-15-2015	Lin et al.	
	20	US-9,300,970	03-29-2016	Lee et al.	
	21	US-9,313,494	04-12-2016	Zheng et al.	
	22	US-9,319,716	04-19-2016	Chien et al.	
	23	US-9,351,014	05-24-2016	Suzuki et al.	
	24	US-9,363,520	06-07-2016	Park et al.	
	25	US-9,565,447	02-07-2017	Lee et al.	
	26	US-9,635,382	04-25-2017	Zhou	
	27	US-9,992,511	06-05-2018	Bici et al.	

Examiner Signature		Date Considered	

*Examiner: Initial if reference considered, whether or not citation is in conformance with MPEP 609. Draw line through citation if not in conformance and not considered. Include copy of this form with next communication to applicant.

Nokia Exhibit 2004, p. 151
Amazon.com v. Nokia
IPR2024-00605

Substitute for form SB08 (Revised 07/09)				Complete if Known	
INFORMATION DISCLOSURE STATEMENT BY APPLICANT *(Use as many sheets as necessary)*				Application Number	16/741,156
				Filing Date	January 13, 2020
				First Named Inventor	Bici et al.
				Art Unit	2488
				Examiner Name	Nathnael B. Aynalem
Sheet	2	of	3	Attorney Docket Number	042933/542643

FOREIGN PATENT DOCUMENTS

Examiner Initials	Cite No.	Foreign Patent Document Country Code – Number Kind Code (if known)	Publication Date MM-DD-YYYY	Name of Patentee or Applicant of Cited Document	Pages, Columns, Lines, Where Relevant Passages or Relevant Figures Appear	English Language Translation Attached
	28	GB 2493755 A	02-20-2013	Canon Kabushiki Kaisha		
	29	JP 2005142986	06-02-2005	Matsushita Electric Ind Co Ltd		
	30	KR 20110027480 A	03-16-2011	SK Telecom Co., Ltd.		Abstract; corresponds to US-2012/0269268 A1

OTHER DOCUMENTS

Examiner Initials*	Cite No.	Include name of the author (in CAPITAL LETTERS), title of the article (when appropriate), title of the item (book, magazine, journal, serial, symposium, catalog, etc.), date, page(s) , volume-issue number(s), publisher, city and/or country where published.	English Language Translation Attached
	31	Ascenso et al., "Improving Frame Interpolation with Spatial Motion Smoothing for Pixel Domain Distributed Video Coding", Proceedings of the 5th EURASIP Conference on Speech and Image Processing, Multimedia Communications and Services, (January 2005), 6 pages.	
	32	Kao et al., "A High-Performance and Memory-Efficient Architecture for H.264/AVD Motion Estimation", 2008 IEEE International Conference on Multimedia and Expo, (June 23, 2008), 4 pages.	
	33	Marpe et al., "Video Compression Using Nested Quadtree Structures, Leaf Merging and Improved Techniques for Motion Representation and Entropy Coding", IEEE Transactions on Circuits and Systems for Video Technology, Volume 20, Issue 12, (December 2010), 10 pages.	
	34	Ng et al., "Block-Matching Translational and Rotational Motion Compensated Prediction Using Interpolated Reference Frame", EURASIP Journal on Advances in Signal Processing, Volume 2010, Article ID 385631 (November 30, 2010), 9 pages.	
	35	Nisar et al., "Content Adaptive Fast Motion Estimation Based on Spatio-Temporal Homogeneity Analysis and Motion Classification", Pattern Recognition Letters, Volume 33, Issue 1 (January 2012), 10 pages.	
	36	Oudin et al., "Block Merging for Quadtree-Based Video Coding", 2011 IEEE International conference on Multimedia and Expo, (July 11-15, 2011), 22 pages.	
	37	Po et al., "Multi-Directional Search Algorithm for Block-Based Motion Estimation", APCCAS 2008, 2008 IEEE Asia Pacific Conference on Circuits and Systems, (November 30-December 3, 2008), 4 pages.	
	38	Seferidis et al., "General Approach To Block-Matching Motion Estimation", Optical Engineering, Volume 32, Issue 7 (July 1, 1993), 11 pages.	

Examiner Signature		Date Considered	

*Examiner: Initial if reference considered, whether or not citation is in conformance with MPEP 609. Draw line through citation if not in conformance and not considered. Include copy of this form with next communication to applicant.

Submitted June 7, 2021

Substitute for form SB08 (Revised 07/09)				Complete if Known	
INFORMATION DISCLOSURE STATEMENT BY APPLICANT *(Use as many sheets as necessary)*				Application Number	16/741,156
				Filing Date	January 13, 2020
				First Named Inventor	Bici et al.
				Art Unit	2488
				Examiner Name	Nathnael B. Aynalem
Sheet	3	of	3	Attorney Docket Number	042933/542643

OTHER DOCUMENTS

Examiner Initials*	Cite No.	Include name of the author (in CAPITAL LETTERS), title of the article (when appropriate), title of the item (book, magazine, journal, serial, symposium, catalog, etc.), date, page(s) , volume-issue number(s), publisher, city and/or country where published.	English Language Translation Attached
	39	Tourapis et al., "Fast Motion Estimation Within the H.264 Codec", 2003 International Conference on Multimedia and Expo, (July 6-9, 2003), 4 pages.	
	40	Tsai et al., "A Novel 3-D Predict Hexagon Search Algorithm for Fast Block Motion Estimation on H.264 Video Coding", IEEE Transactions on Circuits and Systems for Video Technology, Vol. 16, No. 12, (December 2006), 8 pages.	
	41	Wiegand et al., "Overview of the H.264/AVC Video Coding Standard", IEEE Transactions on Circuits and Systems for Video Technology, (July 2003), 19 pages.	
	42	Wong et al., "Block-Matching Translation and Zoom Motion-Compensated Prediction", 2009 IEEE International conference on Multimedia and Expo, (June 28-July 3, 2009), 4 pages.	
	43	Zhao et al., "Lossless Image Compression Using Super-Spatial Structure Prediction", IEEE Signal Processing Letters, Vol. 17, No. 4, (April 2010), 4 pages.	
	44	Zheng et al., "Unified Motion Vector Predictor Selection for Merge and AMVP", Joint Collaborative Team on Video Coding (JCT-VC) of ITU-T SG16 WP3 and ISO/IEC JTC1/SC29/WG11, 5th Meeting, (March 16-23, 2011), 5 pages.	

Examiner Signature		Date Considered	

*Examiner: Initial if reference considered, whether or not citation is in conformance with MPEP 609. Draw line through citation if not in conformance and not considered. Include copy of this form with next communication to applicant.

Submitted June 7, 2021

Electronic Patent Application Fee Transmittal

Application Number:	16741156
Filing Date:	13-Jan-2020
Title of Invention:	METHOD FOR CODING AND AN APPARATUS
First Named Inventor/Applicant Name:	Mehmet Oguz BICI
Filer:	Guy Randall Gosnell
Attorney Docket Number:	042933/542643

Filed as Large Entity

Filing Fees for **Utility under 35 USC 111(a)**

Description	Fee Code	Quantity	Amount	Sub-Total in USD($)
Basic Filing:				
Pages:				
Claims:				
Miscellaneous-Filing:				
Petition:				
Patent-Appeals-and-Interference:				
Post-Allowance-and-Post-Issuance:				
Extension-of-Time:				

Description	Fee Code	Quantity	Amount	Sub-Total in USD($)
Miscellaneous:				
RCE- 1ST REQUEST	1801	1	1360	1360
		Total in USD ($)		**1360**

Electronic Acknowledgement Receipt

EFS ID:	42921702
Application Number:	16741156
International Application Number:	
Confirmation Number:	3751
Title of Invention:	METHOD FOR CODING AND AN APPARATUS
First Named Inventor/Applicant Name:	Mehmet Oguz BICI
Customer Number:	10949
Filer:	Guy Randall Gosnell
Filer Authorized By:	
Attorney Docket Number:	042933/542643
Receipt Date:	07-JUN-2021
Filing Date:	13-JAN-2020
Time Stamp:	22:01:08
Application Type:	Utility under 35 USC 111(a)

Payment information:

Submitted with Payment	yes
Payment Type	DA
Payment was successfully received in RAM	$1360
RAM confirmation Number	E202167M03491918
Deposit Account	
Authorized User	

The Director of the USPTO is hereby authorized to charge indicated fees and credit any overpayment as follows:

File Listing:

Document Number	Document Description	File Name	File Size(Bytes)/ Message Digest	Multi Part /.zip	Pages (if appl.)
1	Request for Continued Examination (RCE)	542643_RCE.pdf	1375996 7a3522c9680e81d3ec8c6d92ed571d483637f36b	no	3
Warnings:					
Information:					
2		542643_IDS.pdf	322055 5f118d78ef048a494cb671dbaa23f06e5d9d598f	yes	4
	Multipart Description/PDF files in .zip description				
	Document Description		**Start**	**End**	
	Transmittal Letter		1	1	
	Information Disclosure Statement (IDS) Form (SB08)		2	4	
Warnings:					
Information:					
3	Foreign Reference	542643_GB2493755A_1.PDF	3379848 1a4682862b555c6da9d599b89a027a0f1114f08a	no	80
Warnings:					
Information:					
4	Foreign Reference	542643_JP2005142986A_1.PDF	1049959 8a58e3ad489a8ea66d0bf462ee4a66a709f60937	no	21
Warnings:					
Information:					
5	Foreign Reference	542643_KR20110027480A_1.PDF	1728668 ea5461406ed1bc1f29ec05a8d4b18dbd64f39f61	no	31
Warnings:					
Information:					

6	Non Patent Literature	542643_Ascenso_1.PDF	189643 39d34b7f01b5b3014c40dfbea4681e17c9829038	no	6
Warnings:					
Information:					
7	Non Patent Literature	542643_Kao_1.PDF	182465 ba7da2e3704976d4b06923fed36b0cf38e8d38e3	no	4
Warnings:					
Information:					
8	Non Patent Literature	542643_Marpe_1.PDF	727661 61b21210840e57b2fd997779f9968925ae6e137e	no	10
Warnings:					
Information:					
9	Non Patent Literature	542643_Ng_1.PDF	174843 d40a724d7c5d130dcc913ed8be946159b5f73aa6	no	9
Warnings:					
Information:					
10	Non Patent Literature	542643_Nisar_1.PDF	393548 4d52d0e91f6d2f834d7f2618c6a100979968e73b	no	10
Warnings:					
Information:					
11	Non Patent Literature	542643_Oudin_1.PDF	1663087 0cfc3ae6056288874649fe73d46c59b28ce2985d	no	22
Warnings:					
Information:					
12	Non Patent Literature	542643_Po_1.PDF	1161995 90280b16543d9f7954d68fb14182e593c2f19848	no	4
Warnings:					
Information:					

13	Non Patent Literature	542643_Seferidis_1.PDF	2187427 0441f4a7fa573b193f9e9b61081383253aa15227	no	11
Warnings:					
Information:					
14	Non Patent Literature	542643_Tourapis_1.PDF	329206 47e3bd2db441d6ee7511c697885cf84c4ee031ef	no	4
Warnings:					
Information:					
15	Non Patent Literature	542643_Tsai_1.PDF	497356 9cb461b809837c9f3b57674dc6e969962ccbf4fa	no	8
Warnings:					
Information:					
16	Non Patent Literature	542643_Wiegand_1.PDF	7877641 aea0c573eae2792e2129d9bc0d06861b70b226d9	no	19
Warnings:					
Information:					
17	Non Patent Literature	542643_Wong_1.PDF	119073 fd451c8ac1c1ce9436163ed1c38e5aa85eb61fe5	no	4
Warnings:					
Information:					
18	Non Patent Literature	542643_Zhao_1.PDF	243580 e574c541e7991bb3399c55b5a2c437fc52167e5b	no	4
Warnings:					
Information:					
19	Non Patent Literature	542643_Zheng_1.PDF	194834 c6b651b4a0d9f0f559ff6530f3b766d8acb85fd9	no	5
Warnings:					
Information:					

20	Fee Worksheet (SB06)	fee-info.pdf	30495 ebeb819e779f467a780aea43bdaad1325983f354	no	2

Warnings:

Information:

Total Files Size (in bytes):	23829380

This Acknowledgement Receipt evidences receipt on the noted date by the USPTO of the indicated documents, characterized by the applicant, and including page counts, where applicable. It serves as evidence of receipt similar to a Post Card, as described in MPEP 503.

New Applications Under 35 U.S.C. 111
If a new application is being filed and the application includes the necessary components for a filing date (see 37 CFR 1.53(b)-(d) and MPEP 506), a Filing Receipt (37 CFR 1.54) will be issued in due course and the date shown on this Acknowledgement Receipt will establish the filing date of the application.
National Stage of an International Application under 35 U.S.C. 371
If a timely submission to enter the national stage of an international application is compliant with the conditions of 35 U.S.C. 371 and other applicable requirements a Form PCT/DO/EO/903 indicating acceptance of the application as a national stage submission under 35 U.S.C. 371 will be issued in addition to the Filing Receipt, in due course.
New International Application Filed with the USPTO as a Receiving Office
If a new international application is being filed and the international application includes the necessary components for an international filing date (see PCT Article 11 and MPEP 1810), a Notification of the International Application Number and of the International Filing Date (Form PCT/RO/105) will be issued in due course, subject to prescriptions concerning national security, and the date shown on this Acknowledgement Receipt will establish the international filing date of the application.

Substitute for form SB08 (Revised 07/09)				Complete if Known	
INFORMATION DISCLOSURE STATEMENT BY APPLICANT *(Use as many sheets as necessary)*				Application Number	16/741,156
				Filing Date	January 13, 2020
				First Named Inventor	Bici et al.
				Art Unit	2488
				Examiner Name	Nathnael B. Aynalem
Sheet	1	of	1	Attorney Docket Number	042933/542643

U. S. PATENT DOCUMENTS

Examiner Initials*	Cite No.	Document Number Number – Kind Code (if known)	Publication Date MM-DD-YYYY	Name of Patentee or Applicant of Cited Document	Pages, Columns, Lines, Where Relevant Passages of Relevant Figures Appear

FOREIGN PATENT DOCUMENTS

Examiner Initials	Cite No.	Foreign Patent Document Country Code – Number Kind Code (if known)	Publication Date MM-DD-YYYY	Name of Patentee or Applicant of Cited Document	Pages, Columns, Lines, Where Relevant Passages or Relevant Figures Appear	English Language Translation Attached

OTHER DOCUMENTS

Examiner Initials*	Cite No.	Include name of the author (in CAPITAL LETTERS), title of the article (when appropriate), title of the item (book, magazine, journal, serial, symposium, catalog, etc.), date, page(s) , volume-issue number(s), publisher, city and/or country where published.	English Language Translation Attached
	1	Extended European Search Report for European Application No. 20200049.3 dated June 11, 2021, 15 pages.	
	2	Lin et al., "Motion Vector Coding Techniques for HEVC", 2011 IEEE 13th International Workshop on Multimedia Signal Processing, (October 17-19, 2011), 7 pages.	

Examiner Signature		Date Considered	

*Examiner: Initial if reference considered, whether or not citation is in conformance with MPEP 609. Draw line through citation if not in conformance and not considered. Include copy of this form with next communication to applicant.

Submitted June 23, 2021

Electronic Acknowledgement Receipt

EFS ID:	43063650
Application Number:	16741156
International Application Number:	
Confirmation Number:	3751
Title of Invention:	METHOD FOR CODING AND AN APPARATUS
First Named Inventor/Applicant Name:	Mehmet Oguz BICI
Customer Number:	10949
Filer:	Guy Randall Gosnell/Kristen Mims
Filer Authorized By:	Guy Randall Gosnell
Attorney Docket Number:	042933/542643
Receipt Date:	23-JUN-2021
Filing Date:	13-JAN-2020
Time Stamp:	11:26:47
Application Type:	Utility under 35 USC 111(a)

Payment information:

Submitted with Payment	no

File Listing:

Document Number	Document Description	File Name	File Size(Bytes)/ Message Digest	Multi Part /.zip	Pages (if appl.)
1	Patent Term Adjustment Stmt Under 37CFR1.704(d)	542643_PTA.pdf	80891 23b86aafa020140c7cf67abab41a1d6208d3a205	no	1

Warnings:

Information:					
2		542643_IDS.pdf	303970 d27fcfdbb5402d1d38b79b3789fcca9d554803f8	yes	3
	Multipart Description/PDF files in .zip description				
	Document Description		**Start**	**End**	
	Transmittal Letter		1	2	
	Information Disclosure Statement (IDS) Form (SB08)		3	3	
Warnings:					
Information:					
3	Non Patent Literature	542643_EESR_1.PDF	644247 e2b002d4e521183d8285b51ec708db7b9bd461b5	no	15
Warnings:					
Information:					
4	Non Patent Literature	542643_Lin.PDF	528458 8f7783bdff4c838f07f65035a8745a5b6efb469a	no	7
Warnings:					
Information:					
		Total Files Size (in bytes):	1557566		

This Acknowledgement Receipt evidences receipt on the noted date by the USPTO of the indicated documents, characterized by the applicant, and including page counts, where applicable. It serves as evidence of receipt similar to a Post Card, as described in MPEP 503.

New Applications Under 35 U.S.C. 111
If a new application is being filed and the application includes the necessary components for a filing date (see 37 CFR 1.53(b)-(d) and MPEP 506), a Filing Receipt (37 CFR 1.54) will be issued in due course and the date shown on this Acknowledgement Receipt will establish the filing date of the application.
National Stage of an International Application under 35 U.S.C. 371
If a timely submission to enter the national stage of an international application is compliant with the conditions of 35 U.S.C. 371 and other applicable requirements a Form PCT/DO/EO/903 indicating acceptance of the application as a national stage submission under 35 U.S.C. 371 will be issued in addition to the Filing Receipt, in due course.
New International Application Filed with the USPTO as a Receiving Office
If a new international application is being filed and the international application includes the necessary components for an international filing date (see PCT Article 11 and MPEP 1810), a Notification of the International Application Number and of the International Filing Date (Form PCT/RO/105) will be issued in due course, subject to prescriptions concerning national security, and the date shown on this Acknowledgement Receipt will establish the international filing date of the application.

PATENT TERM ADJUSTMENT STATEMENT UNDER 37 CFR 1.704(d)

Application Number	16/741,156
Filing Date	January 13, 2020
First Named Inventor	Bici et al.
Art Unit	2488
Examiner Name	Nathnael B. Aynalem
Practitioner Docket No.	042933/542643

APPLICANT HEREBY STATES THE FOLLOWING (please review 37 CFR 1.704(d) before filing this form):

☒ Each item of information contained in the information disclosure statement was first cited in any communication from a patent office in a counterpart foreign or international application or from the Office, and this communication was not received by any individual designated in 37 CFR 1.56(c) more than thirty days prior to the filing of the information disclosure statement.

AND/OR

☒ Each item of information contained in the information disclosure statement is a communication that was issued by a patent office in a counterpart foreign or international application or by the Office, and this communication was not received by any individual designated in 37 CFR 1.56(c) more than thirty days prior to the filing of the information disclosure statement.

INSTRUCTIONS:

- **This form will not satisfy the requirement of 37 CFR 1.97(e).** The present statement is filed under 37 CFR 1.704(d) and will not substitute for compliance with any of the requirements of 37 CFR 1.97 and 1.98. For an information disclosure statement to comply with 37 CFR 1.97(c) or (d), the information disclosure statement must be accompanied by a statement under 37 CFR 1.97(e) notwithstanding any statement filed under 37 CFR 1.704(d).
- The present form (PTO/SB/133) should be filed concurrently with the information disclosure statement to derive benefit under 37 CFR 1.704(d).

Signature	/Guy R. Gosnell/	Date	2021-06-23
Typed or Printed Name	Guy R. Gosnell	Practitioner Registration Number	34,610

***Note**: Signatures of all the inventors or assignees of record of the entire interest or their representative(s) are required in accordance with 37 CFR 1.33 and 11.18. Please see 37 CFR 1.4(d) for the form of the signature. If necessary, submit multiple forms for more than one signature, see below*.*

☐ *Total of _____ forms are submitted.

If you need assistance in completing the form, call 1-800-PTO-9199 and select option 2.

IN THE UNITED STATES PATENT AND TRADEMARK OFFICE

In re:	Bici et al.	Confirmation No.:	3751
Appl. No.:	16/741,156	Group Art Unit:	2488
Filed:	January 13, 2020	Examiner:	Nathnael B. Aynalem
For:	METHOD FOR CODING AND AN APPARATUS		

Submitted via EFS-Web
Commissioner for Patents
P.O. Box 1450
Alexandria, VA 22313-1450

SUPPLEMENTAL INFORMATION DISCLOSURE STATEMENT
CITATION UNDER 37 C.F.R. § 1.97

Attached is a list of documents on form PTO-SB08.

Copies of all listed documents (other than U.S. patents, U.S. patent application publications, or patents or publications otherwise determined cumulative) are attached, except those (if any) that were previously submitted to, or cited by, the Office during the prosecution of any application(s) upon which the present application directly relies for an earlier effective filing date under 35 U.S.C. § 120. It is noted that 37 C.F.R. § 1.98(d) establishes that copies of documents previously submitted to, or cited by, the Office during prosecution of the above application(s) are not required to be furnished; however, copies of such documents will be furnished upon request.

It is requested that the Examiner consider these documents and officially make them of record in accordance with the provisions of 37 C.F.R. § 1.97 and Section 609 of the MPEP. By identifying the listed documents, Applicant in no way makes any admission as to the prior art status of the listed documents but is instead identifying the listed documents for the sake of full disclosure.

In accordance with the requirements of 37 C.F.R. § 1.704(d)), the following statement is made:

Some of the items of information contained in this Information Disclosure Statement were first cited in any communication from a patent office in a counterpart foreign or international application or from the Office, and this communication was not received by any individual designated by 37 C.F.R. § 1.56(c) more than thirty (30) days prior to the filing of this Information Disclosure Statement; and

Some of the items of information contained in this Information Disclosure Statement are a communication that was issued by a patent office in a counterpart foreign or international application or by the Office, and this communication was not received by any individual

Nokia Exhibit 2004, p. 165
Amazon.com v. Nokia
IPR2024-00605

designated in 37 C.F.R. § 1.56(c) more than thirty (30) days prior to the filing of this Information Disclosure Statement.

Respectfully submitted,

/Guy R. Gosnell/

Guy R. Gosnell
Registration No. 34,610

Customer No. 10949
ALSTON & BIRD LLP
Bank of America Plaza
101 South Tryon Street, Suite 4000
Charlotte, NC 28280-4000
Tel Charlotte Office (704) 444-1000
Fax Charlotte Office (704) 444-1111

Nokia Exhibit 2004, p. 166
Amazon.com v. Nokia
IPR2024-00605

UNITED STATES PATENT AND TRADEMARK OFFICE

UNITED STATES DEPARTMENT OF COMMERCE
United States Patent and Trademark Office
Address: COMMISSIONER FOR PATENTS
P.O. Box 1450
Alexandria, Virginia 22313-1450
www.uspto.gov

APPLICATION NO.	FILING DATE	FIRST NAMED INVENTOR	ATTORNEY DOCKET NO.	CONFIRMATION NO.
16/741,156	01/13/2020	Mehmet Oguz BICI	042933/542643	3751

10949 7590 08/16/2021
Nokia Corporation and Alston & Bird LLP
c/o Alston & Bird LLP
One South at The Plaza, 101 South Tryon Street
Suite 4000
Charlotte, NC 28280-4000

EXAMINER
AYNALEM, NATHNAEL B

ART UNIT	PAPER NUMBER
2488	

NOTIFICATION DATE	DELIVERY MODE
08/16/2021	ELECTRONIC

Please find below and/or attached an Office communication concerning this application or proceeding.

The time period for reply, if any, is set in the attached communication.

Notice of the Office communication was sent electronically on above-indicated "Notification Date" to the following e-mail address(es):

usptomail@alston.com

Nokia Exhibit 2004, p. 167
Amazon.com v. Nokia
IPR2024-00605

Office Action Summary	Application No. 16/741,156	Applicant(s) BICI et al.	
	Examiner NATHNAEL AYNALEM	Art Unit 2488	AIA (FITF) Status No

-- The MAILING DATE of this communication appears on the cover sheet with the correspondence address --

Period for Reply

A SHORTENED STATUTORY PERIOD FOR REPLY IS SET TO EXPIRE 3 MONTHS FROM THE MAILING DATE OF THIS COMMUNICATION.

- Extensions of time may be available under the provisions of 37 CFR 1.136(a). In no event, however, may a reply be timely filed after SIX (6) MONTHS from the mailing date of this communication.
- If NO period for reply is specified above, the maximum statutory period will apply and will expire SIX (6) MONTHS from the mailing date of this communication.
- Failure to reply within the set or extended period for reply will, by statute, cause the application to become ABANDONED (35 U.S.C. § 133). Any reply received by the Office later than three months after the mailing date of this communication, even if timely filed, may reduce any earned patent term adjustment. See 37 CFR 1.704(b).

Status

1)☑ Responsive to communication(s) filed on 06/07/2021.

☐ A declaration(s)/affidavit(s) under **37 CFR 1.130(b)** was/were filed on _____.

2a)☐ This action is **FINAL.** 2b) ☑ This action is non-final.

3)☐ An election was made by the applicant in response to a restriction requirement set forth during the interview on _____; the restriction requirement and election have been incorporated into this action.

4)☐ Since this application is in condition for allowance except for formal matters, prosecution as to the merits is closed in accordance with the practice under *Ex parte Quayle*, 1935 C.D. 11, 453 O.G. 213.

Disposition of Claims*

5) ☑ Claim(s) 1-30 is/are pending in the application.

5a) Of the above claim(s) _____ is/are withdrawn from consideration.

6) ☐ Claim(s) _____ is/are allowed.

7) ☑ Claim(s) 1-30 is/are rejected.

8) ☐ Claim(s) _____ is/are objected to.

9) ☐ Claim(s) _____ are subject to restriction and/or election requirement

* If any claims have been determined allowable, you may be eligible to benefit from the **Patent Prosecution Highway** program at a participating intellectual property office for the corresponding application. For more information, please see http://www.uspto.gov/patents/init_events/pph/index.jsp or send an inquiry to **PPHfeedback@uspto.gov.**

Application Papers

10)☐ The specification is objected to by the Examiner.

11)☐ The drawing(s) filed on _____ is/are: a)☐ accepted or b)☐ objected to by the Examiner.

Applicant may not request that any objection to the drawing(s) be held in abeyance. See 37 CFR 1.85(a).

Replacement drawing sheet(s) including the correction is required if the drawing(s) is objected to. See 37 CFR 1.121(d).

Priority under 35 U.S.C. § 119

12)☐ Acknowledgment is made of a claim for foreign priority under 35 U.S.C. § 119(a)-(d) or (f).

Certified copies:

a)☐ All b)☐ Some** c)☐ None of the:

1.☐ Certified copies of the priority documents have been received.

2.☐ Certified copies of the priority documents have been received in Application No. _____.

3.☐ Copies of the certified copies of the priority documents have been received in this National Stage application from the International Bureau (PCT Rule 17.2(a)).

** See the attached detailed Office action for a list of the certified copies not received.

Attachment(s)

1) ☑ Notice of References Cited (PTO-892)

2) ☑ Information Disclosure Statement(s) (PTO/SB/08a and/or PTO/SB/08b) Paper No(s)/Mail Date _____.

3) ☐ Interview Summary (PTO-413) Paper No(s)/Mail Date _____.

4) ☐ Other: _____.

Nokia Exhibit 2004, p. 168
Amazon.com v. Nokia
IPR2024-00605

DETAILED ACTION

Notice of Pre-AIA or AIA Status

The present application is being examined under the pre-AIA first to invent provisions.

Continued Examination Under 37 CFR 1.114

A request for continued examination under 37 CFR 1.114, including the fee set forth in 37 CFR 1.17(e), was filed in this application after allowance or after an Office action under *Ex Parte Quayle*, 25 USPQ 74, 453 O.G. 213 (Comm'r Pat. 1935). Since this application is eligible for continued examination under 37 CFR 1.114, and the fee set forth in 37 CFR 1.17(e) has been timely paid, prosecution in this application has been reopened pursuant to 37 CFR 1.114. Applicant's submission filed on June 07, 2021 has been entered.

Allowable Subject Matter

The indicated allowability of claims 1-30 is withdrawn in view of the newly discovered reference(s) to Rusert et al. (Pub. No. US 2011/0194609 A1). Rejections based on the newly cited reference(s) follow.

Claim Objections

Claims 1, 15, 23 and 29 are objected to due to the following informalities:

In claims 1, 15, 23 and 29 the term “candiate” appear to have a typo error. Appropriate correction is required.

Claim Rejections - 35 USC § 112

The following is a quotation of 35 U.S.C. 112(b):
(b) CONCLUSION.—The specification shall conclude with one or more claims particularly pointing out and distinctly claiming the subject matter which the inventor or a joint inventor regards as the invention.

The following is a quotation of 35 U.S.C. 112 (pre-AIA), second paragraph:
The specification shall conclude with one or more claims particularly pointing out and distinctly claiming the subject matter which the applicant regards as his invention.

Claims 1-28 are rejected under 35 U.S.C. 112(b) or 35 U.S.C. 112 (pre-AIA), second paragraph, as being indefinite for failing to particularly point out and distinctly claim the subject matter which the inventor or a joint inventor (or for applications subject to pre-AIA 35 U.S.C. 112, the applicant), regards as the invention.

Claims 1, 2-4 and 6 recite the term "a potential spatial motion vector prediction candidate". It is unclear how the term should be understood in the claims because claim 1 recites "selecting a first spatial motion vector prediction candidate from a set of spatial motion vector prediction candidates for a block of pixels as a potential spatial motion vector prediction candidate…". Dependent claim 2 recites "selecting spatial motion vector prediction candidates from the set of spatial motion vector prediction candidates as the potential spatial motion vector prediction candidate…"In claim 1 as outlined above, a first spatial motion vector prediction candidate is selected as a potential spatial motion vector prediction candidate. However, in the dependent claim 2 as outlined above, spatial motion vector candidates are selected as the potential spatial motion vector prediction candidate, which makes the claims appear to be vague, and thereby render the claims indefinite.

Claims 9-11, 13, 15-18, 20, 23-25 and 27 are rejected due to similar reasons set forth above with respect to claims 1, 2-4 and 6.

Claim 6 recites the limitation " the received block of pixels is vertically divided into a first prediction unit and a second prediction unit; or the received block of pixels is horizontally divided into a first prediction unit and a second prediction unit, and if the prediction unit is the second prediction unit, and the potential spatial motion vector prediction candidate has essentially similar motion information than a spatial motion vector prediction candidate above the prediction unit; for a potential spatial motion vector prediction candidate above the prediction unit, excluding the potential spatial motion vector prediction candidate from the motion vector prediction list if any of the following conditions are fulfilled: the received block of pixels is horizontally divided into a first prediction unit and a second prediction unit…" there is insufficient antecedent basis for "the received block of pixels" in the claim. Claims 13, 20 and 27 are rejected due to similar reasons set forth above with respect to claim 6.

Claim 6 recites "all the other potential spatial motion vector prediction candidates have been included in the motion vector prediction list". There is insufficient antecedent basis for the "all the other potential spatial motion vector prediction candidates" in the claim. Claims 13, 20 and 27 are rejected due to similar reasons set forth above with respect to claim 6.

The rest of the dependent claims are rejected based on their dependency from the rejected claims.

Claim Rejections - 35 USC § 102

In the event the determination of the status of the application as subject to AIA 35 U.S.C. 102 and 103 (or as subject to pre-AIA 35 U.S.C. 102 and 103) is incorrect, any correction of the statutory basis for the rejection will not be considered a new ground of rejection if the prior art relied upon, and the rationale supporting the rejection, would be the same under either status.

The following is a quotation of the appropriate paragraphs of pre-AIA 35 U.S.C. 102 that form the basis for the rejections under this section made in this Office action:

> A person shall be entitled to a patent unless –
>
> (a) the invention was known or used by others in this country, or patented or described in a printed publication in this or a foreign country, before the invention thereof by the applicant for a patent.

Claim(s) 1-3, 5, 7-10, 12, 14-17, 19, 21-24, 26 and 28-30 is/are rejected under pre-AIA 35 U.S.C. 102(a) as being anticipated by Rusert et al. (Pub. No. US 2011/0194609 A1).

Regarding claim 1, Rusert discloses a method comprising: selecting a first spatial motion vector prediction candidate from a set of spatial motion vector prediction candidates for a block of pixels as a potential spatial motion vector prediction candidate to be included in a motion vector prediction list for a prediction unit of the block of pixels (**¶¶0036, 00067-0068: Motion vectors to be added to a PMV_CANDS list may comprise spatial or temporal neighbors of the current block, or combinations of spatial and/or temporal neighbors…As an alternative to consideration of a pre-defined neighborhood to scan for motion vector candidates, it may be signaled from encoder to decoder (and thus <u>dynamically decided</u> at the encoder), for each motion vector or for a set of motion vectors (e.g. a macroblock), whether the associated motion vectors are to be added to the PMV_CANDS list**), where the motion vector prediction list comprises motion information of the spatial motion vector prediction candidates

and is utilized to identify motion vector prediction candidates of which one spatial motion vector prediction candidate from the motion vector prediction list is signaled as the motion information for the prediction unit (¶0074-**Alternatively, removal of candidates from a PMV_CANDS list may be signaled explicitly from the encoder to the decoder (and thus decided dynamically by the encoder), e.g. by sending a code for removal of a motion vector candidate from a list along with an identifier of the motion vector, e.g. an index**); comparing motion information of the first spatial motion vector prediction candidate with motion information of spatial motion vector prediction candidates in a subset of spatial motion vector prediction candidates that are based on a location of the block associated with the first spatial motion vector prediction candidate (¶¶0071, 0075-0076: **One measure for reducing the number of candidates is to avoid duplicate occurrences of the same motion vector in a given PMV_CANDS list. This car be done, when updating the list, by comparing the candidates already in the list with the new vector that could be added, and if a duplicate is found, either removing the duplicate vector or skipping the new vector…The following methods can be used when updating a PMV_CANDS list in order to sort the candidates in a way that is beneficial for overall coding efficiency. .. The motion vectors corresponding to blocks that are close to the current block (using some distance metric) will get a position closer to the start of the list compared to motion vectors belonging to blocks that are further away from the current block**); determining to include or exclude the first spatial motion vector prediction candiate in the motion vector prediction list based on the comparing (¶¶0071, 0075-0076: **One measure for reducing the number of candidates is to avoid duplicate occurrences of the same motion vector in a given PMV_CANDS list. This car be done, when updating the list, by comparing the candidates already in the list with the new vector that could be added, and if**

a duplicate is found, either removing the duplicate vector or skipping the new vector…); and causing information identifying the one spatial motion vector prediction candidate from the motion vector prediction list to be transmitted to a decoder or to be stored (**¶0074-Alternatively, removal of candidates from a PMV_CANDS list may be signaled explicitly from the encoder to the decoder (and thus decided dynamically by the encoder), e.g. by sending a code for removal of a motion vector candidate from a list along with an identifier of the motion vector, e.g. an index**).

Regarding claim 2, Rusert discloses the method according to claim 1 further comprising selecting spatial motion vector prediction candidates from the set of spatial motion vector prediction candidates as the potential spatial motion vector prediction candidate in a predetermined order (**¶¶0075-0077: The following methods can be used when updating a PMV_CANDS list in order <u>to sort</u> the candidates in a way that is beneficial for overall coding efficiency…The motion vectors corresponding to blocks that are close to the current block (using some distance metric) will get a position closer to the start of the list compared to motion vectors belonging to blocks that are further away from the current block… The motion vector associated with the last coded block is placed at the beginning of the list (shortest code word).).**

Regarding claim 3, Rusert discloses the method according to claim 1, further comprising comparing motion information of the potential spatial motion vector prediction candidate with motion information of at most one other spatial motion vector prediction candidate of the set of spatial motion vector prediction candidates (**¶¶0068, 0071: Motion vectors to be added to a**

PMV_CANDS list may comprise spatial or temporal neighbors of the current block, or combinations of spatial and/or temporal neighbors…One measure for reducing the number of candidates is to avoid duplicate occurrences of the same motion vector in a given PMV_CANDS list. This car be done, when updating the list, by comparing the candidates already in the list with the new vector that could be added, and if a duplicate is found, either removing the duplicate vector or skipping the new vector).

Regarding claim 5, Rusert discloses the method according to claim 1, further comprising determining a maximum number of spatial motion vector prediction candidates to be included in the motion vector prediction list; and limiting the number of spatial motion vector prediction candidates in the motion vector prediction list smaller or equal to the maximum number (**¶0073: Also, the number of candidates in PMV_CANDS may be limited to a pre-defined or dynamically obtained number. It is possible that once the number has been reached an additional candidate is to be added, then the candidate at the end of the PMV_CANDS list may be removed).**

Regarding claim 7, Rusert discloses the method according to claim 1 further comprising including a temporal motion prediction candidate into the motion vector prediction list (**¶¶0036, 00067-0068: Motion vectors to be added to a PMV_CANDS list may comprise spatial or temporal neighbors of the current block, or combinations of spatial and/or temporal neighbors…As an alternative to consideration of a pre-defined neighborhood to scan for motion vector candidates, it may be signaled from encoder to decoder (and thus dynamically decided at the encoder), for each motion vector or for a set**

of motion vectors (e.g. a macroblock), whether the associated motion vectors are to be added to the PMV_CANDS list).

Regarding claim 8, Rusert discloses the method according to claim 1 further comprising selecting one motion vector prediction candidate from the motion vector prediction list to represent a motion vector prediction for the block of pixels (**¶¶0036, 00067-0068: Motion vectors to be added to a PMV_CANDS list may comprise spatial or temporal neighbors of the current block, or combinations of spatial and/or temporal neighbors…As an alternative to consideration of a pre-defined neighborhood to scan for motion vector candidates, it may be signaled from encoder to decoder (and thus <u>dynamically decided</u> at the encoder), for each motion vector or for a set of motion vectors (e.g. a macroblock), whether the associated motion vectors are to be added to the PMV_CANDS list**).

Regarding claim 9, Rusert discloses a method comprising: selecting a first spatial motion vector prediction candidate from a set of spatial motion vector prediction candidates for an encoded block of pixels as a potential spatial motion vector prediction candidate to be included in a motion vector prediction list for a prediction unit of the encoded block of pixels(**¶¶0036, 00067-0068: Motion vectors to be added to a PMV_CANDS list may comprise spatial or temporal neighbors of the current block, or combinations of spatial and/or temporal neighbors…As an alternative to consideration of a pre-defined neighborhood to scan for motion vector candidates, it may be signaled from encoder to decoder (and thus <u>dynamically decided</u> at the encoder), for each motion vector or for a set of motion vectors (e.g. a macroblock), whether the associated motion vectors are to**

be added to the PMV_CANDS list), where the motion vector prediction list comprises motion information of the spatial motion vector prediction candidates **(¶0074-Alternatively, removal of candidates from a PMV_CANDS list may be signaled explicitly from the encoder to the decoder (and thus decided dynamically by the encoder), e.g. by sending a code for removal of a motion vector candidate from a list along with an identifier of the motion vector, e.g. an index)**; comparing motion information of the first spatial motion vector prediction candidate with motion information of another spatial motion vector prediction candidate of a subset of spatial motion vector prediction candidates that are based on a location of the block associated with the first spatial motion vector prediction candidate **(¶0071, 0075-0076: One measure for reducing the number of candidates is to avoid duplicate occurrences of the same motion vector in a given PMV_CANDS list. This car be done, when updating the list, by comparing the candidates already in the list with the new vector that could be added, and if a duplicate is found, either removing the duplicate vector or skipping the new vector…The following methods can be used when updating a PMV_CANDS list in order to sort the candidates in a way that is beneficial for overall coding efficiency. .. The motion vectors corresponding to blocks that are close to the current block (using some distance metric) will get a position closer to the start of the list compared to motion vectors belonging to blocks that are further away from the current block)**; determining to include or exclude the first spatial motion vector prediction candiate in the motion vector prediction list based on the comparing **(¶0071, 0075-0076: One measure for reducing the number of candidates is to avoid duplicate occurrences of the same motion vector in a given PMV_CANDS list. This car be done, when updating the list, by comparing the candidates already in the list with the new vector that could be added, and if a duplicate is found, either removing the**

duplicate vector or skipping the new vector…); and selecting a spatial motion vector prediction candidate from the motion vector prediction list for use in decoding the encoded block of pixels (**¶¶0036, 00067-0068: Motion vectors to be added to a PMV_CANDS list may comprise spatial or temporal neighbors of the current block, or combinations of spatial and/or temporal neighbors…As an alternative to consideration of a pre-defined neighborhood to scan for motion vector candidates, it may be signaled from encoder to decoder (and thus dynamically decided at the encoder), for each motion vector or for a set of motion vectors (e.g. a macroblock), whether the associated motion vectors are to be added to the PMV_CANDS list)**, wherein the spatial motion vector prediction candidate is selected from the motion vector prediction list using information that was received identifying a respective spatial motion vector prediction candidate from the motion vector prediction list constructed by an encoder (**¶0074-Alternatively, removal of candidates from a PMV_CANDS list may be signaled explicitly from the encoder to the decoder (and thus decided dynamically by the encoder), e.g. by sending a code for removal of a motion vector candidate from a list along with an identifier of the motion vector, e.g. an index).**

Regarding claims 10, 12, 17, 19, 24 and 26, the claims are directed to method/apparatus claims and recites limitations similar to claims 3 and 5. Thus, claims 10, 12, 17, 19, 24 and 26 are rejected due to similar reasons set forth above with respect to claims 3 and 5.

Regarding claims 14 and 28, claims 14 and 28 are directed to method/apparatus claims and analogously recites the limitations as recited in claims 1 and 9. Thus, claims 14 and 28 are rejected due to similar reasons set forth above with respect to claims 1 and 9.

Regarding claims 15 and 29, claims 15 and 29 are directed to an apparatus claims/non-transitory computer readable medium claims and recites limitations similar to claim 1. Thus, claims 15 and 29 are rejected due to similar reasons set forth above with respect to claim 1.

Regarding claim 16, claim 16 is directed to an apparatus claim and recites limitation similar to claim 2. Thus, claim 16 is rejected due to similar reasons set forth above with respect to claim 2.

Regarding claims 21, 22, 23 and 30, claims 21, 22, 23 and 30 are directed to an apparatus/non-transitory computer readable medium claims and recites limitations similar to claims 7, 8 and 9. Thus, claims 21, 22, 23 and 30 are rejected due to similar reasons set forth above with respect to claims 7, 8 and 9.

Allowable Subject Matter

Claims 4, 6, 11, 13, 18, 20, 25 and 27 are would be allowable if rewritten to overcome the rejection(s) under 35 U.S.C. 112(b) or 35 U.S.C. 112 (pre-AIA), 2nd paragraph, set forth in this Office action and to include all of the limitations of the base claim and any intervening claims.

Conclusion

Any inquiry concerning this communication or earlier communications from the examiner should be directed to NATHNAEL AYNALEM whose telephone number is (571)270-1482. The examiner can normally be reached on M-F 9AM-5:30 PM ET.

Examiner interviews are available via telephone, in-person, and video conferencing using a USPTO supplied web-based collaboration tool. To schedule an interview, applicant is encouraged to use the USPTO Automated Interview Request (AIR) at http://www.uspto.gov/interviewpractice.

If attempts to reach the examiner by telephone are unsuccessful, the examiner's supervisor, SATH PERUNGAVOOR can be reached on 571-272-7455. The fax phone number for the organization where this application or proceeding is assigned is 571-273-8300.

Information regarding the status of an application may be obtained from the Patent Application Information Retrieval (PAIR) system. Status information for published applications may be obtained from either Private PAIR or Public PAIR. Status information for unpublished applications is available through Private PAIR only. For more information about the PAIR system, see https://ppair-my.uspto.gov/pair/PrivatePair. Should you have questions on access to the Private PAIR system, contact the Electronic Business Center (EBC) at 866-217-9197 (toll-free). If you would like assistance from a USPTO Customer Service Representative or access to the automated information system, call 800-786-9199 (IN USA OR CANADA) or 571-272-1000.

/NATHNAEL AYNALEM/
Primary Examiner, Art Unit 2488

Notice of References Cited	Application/Control No. 16/741,156	Applicant(s)/Patent Under Reexamination BICI et al.	
	Examiner NATHNAEL AYNALEM	Art Unit 2488	Page 1 of 1

U.S. PATENT DOCUMENTS

*		Document Number Country Code-Number-Kind Code	Date MM-YYYY	Name	CPC Classification	US Classification
*	A	US-20110194609-A1	08-2011	Rusert; Thomas	H04N19/52	375/240.16
	B					
	C					
	D					
	E					
	F					
	G					
	H					
	I					
	J					
	K					
	L					
	M					

FOREIGN PATENT DOCUMENTS

*		Document Number Country Code-Number-Kind Code	Date MM-YYYY	Country	Name	CPC Classification
	N					
	O					
	P					
	Q					
	R					
	S					
	T					

NON-PATENT DOCUMENTS

*		Include as applicable: Author, Title Date, Publisher, Edition or Volume, Pertinent Pages)
	U	
	V	
	W	
	X	

*A copy of this reference is not being furnished with this Office action. (See MPEP § 707.05(a).)
Dates in MM-YYYY format are publication dates. Classifications may be US or foreign.

Nokia Exhibit 2004, p. 182
Amazon.com v. Nokia
IPR2024-00605

Index of Claims	Application/Control No.	Applicant(s)/Patent Under Reexamination
	16/741,156	BICI et al.
	Examiner	**Art Unit**
	NATHNAEL AYNALEM	2488

✓	Rejected	-	Cancelled	N	Non-Elected	A	Appeal
=	Allowed	÷	Restricted	I	Interference	O	Objected

CLAIMS

☐ Claims renumbered in the same order as presented by applicant ☐ CPA ☐ T.D. ☐ R.1.47

CLAIM		DATE								
Final	Original	08/11/2021								
	1	✓								
	2	✓								
	3	✓								
	4	✓								
	5	✓								
	6	✓								
	7	✓								
	8	✓								
	9	✓								
	10	✓								
	11	✓								
	12	✓								
	13	✓								
	14	✓								
	15	✓								
	16	✓								
	17	✓								
	18	✓								
	19	✓								
	20	✓								
	21	✓								
	22	✓								
	23	✓								
	24	✓								
	25	✓								
	26	✓								
	27	✓								
	28	✓								
	29	✓								
	30	✓								

Nokia Exhibit 2004, p. 183
Amazon.com v. Nokia
IPR2024-00605

Search Notes	Application/Control No.	Applicant(s)/Patent Under Reexamination
	16/741,156	BICI et al.
	Examiner	**Art Unit**
	NATHNAEL AYNALEM	2488

CPC - Searched*		
Symbol	**Date**	**Examiner**
H04N19/51 , H04N19/513 , H04N19/50 , H04N19/517 , H04N19/52 , H04N19/10 , H04N19/103 , H04N19/107 , H04N19/109 , H04N19/11 , H04N19/33 , H04N19/31 , H04N19/503 , H04N19/428 , H04N19/55 , H04N19/593 , H04N19/59	08/05/2021	NA

CPC Combination Sets - Searched*		
Symbol	**Date**	**Examiner**

US Classification - Searched*			
Class	**Subclass**	**Date**	**Examiner**
375	240.01-240.29	08/05/2021	NA

* See search history printout included with this form or the SEARCH NOTES box below to determine the scope of the search.

Search Notes		
Search Notes	**Date**	**Examiner**
Inventor's name search on PE2E, see attached	08/11/2021	NA
Assignee search on PE2E, see attached	08/11/2021	NA
The above CPC symbols and the US classification are further limited by a text search on PE2E search, see attached	08/05/2021	NA
NPL search on ip.com, see attached	02/23/2021	NA
NPL search from JCT-VC document management system	02/23/2021	NA

Nokia Exhibit 2004, p. 184
Amazon.com v. Nokia
IPR2024-00605

Search Notes	Application/Control No.	Applicant(s)/Patent Under Reexamination
	16/741,156	BICI et al.
	Examiner	**Art Unit**
	NATHNAEL AYNALEM	2488

Interference Search			
US Class/CPC Symbol	**US Subclass/CPC Group**	**Date**	**Examiner**
	Interference search of the claims (USPGPUB, USPAT)	02/24/2021	NA

Nokia Exhibit 2004, p. 185
Amazon.com v. Nokia
IPR2024-00605

Substitute for form SB08
(Revised 07/09)

INFORMATION DISCLOSURE STATEMENT BY APPLICANT

(Use as many sheets as necessary)

Complete if Known	
Application Number	16/741,156
Filing Date	January 13, 2020
First Named Inventor	Bici et al.
Art Unit	2488
Examiner Name	Nathnael B. Aynalem
Attorney Docket Number	042933/542643

Sheet	1	of	3

U. S. PATENT DOCUMENTS

Examiner Initials*	Cite No.	Document Number Number – Kind Code (if known)	Publication Date MM-DD-YYYY	Name of Patentee or Applicant of Cited Document	Pages, Columns, Lines, Where Relevant Passages of Relevant Figures Appear
	1	US-2011/0176615 A1	07-21-2011	Lee et al.	
	2	US-2011/0194608 A1	08-11-2011	Rusert et al.	
	3	US-2012/0044990 A1	02-23-2012	Bivolarsky et al.	
	4	US-2012/0128060 A1	05-24-2012	Lin et al.	
	5	US-2012/0269268 A1	10-25-2012	Kim et al.	
	6	US-2013/0077871 A1	03-28-2013	Lu et al.	
	7	US-5,428,403	06-27-1995	Andrew et al.	
	8	US-5,594,504	01-14-1997	Ebrahimi	
	9	US-6,040,863	03-21-2000	Kato	
	10	US-6,567,469	05-20-2003	Rackett	
	11	US-7,852,938	12-14-2010	Shi et al.	
	12	US-8,000,386	08-16-2011	Nicolas	
	13	US-8,369,405	02-05-2013	Shi et al.	
	14	US-8,565,544	10-22-2013	Jeon et al.	
	15	US-8,675,736	03-18-2014	Huang et al.	
	16	US-8,787,459	07-22-2014	Wang	
	17	US-8,913,660	12-16-2014	Tourapis et al.	
	18	US-9,066,104	06-23-2015	Wang et al.	
	19	US-9,137,544	09-15-2015	Lin et al.	
	20	US-9,300,970	03-29-2016	Lee et al.	
	21	US-9,313,494	04-12-2016	Zheng et al.	
	22	US-9,319,716	04-19-2016	Chien et al.	
	23	US-9,351,014	05-24-2016	Suzuki et al.	
	24	US-9,363,520	06-07-2016	Park et al.	
	25	US-9,565,447	02-07-2017	Lee et al.	
	26	US-9,635,382	04-25-2017	Zhou	
	27	US-9,992,511	06-05-2018	Bici et al.	

Examiner Signature		Date Considered	

*Examiner: Initial if reference considered, whether or not citation is in conformance with MPEP 609. Draw line through citation if not in conformance and not considered. Include copy of this form with next communication to applicant.

Submitted June 7, 2021

ALL REFERENCES CONSIDERED EXCEPT WHERE LINED THROUGH. /N.A./

Substitute for form SB08 (Revised 07/09)				Complete if Known	
INFORMATION DISCLOSURE STATEMENT BY APPLICANT *(Use as many sheets as necessary)*				Application Number	16/741,156
				Filing Date	January 13, 2020
				First Named Inventor	Bici et al.
				Art Unit	2488
				Examiner Name	Nathnael B. Aynalem
Sheet	2	of	3	Attorney Docket Number	042933/542643

FOREIGN PATENT DOCUMENTS

Examiner Initials	Cite No.	Foreign Patent Document Country Code – Number Kind Code (if known)	Publication Date MM-DD-YYYY	Name of Patentee or Applicant of Cited Document	Pages, Columns, Lines, Where Relevant Passages or Relevant Figures Appear	English Language Translation Attached
	28	GB 2493755 A	02-20-2013	Canon Kabushiki Kaisha		
	29	JP 2005142986	06-02-2005	Matsushita Electric Ind Co Ltd		
	30	KR 20110027480 A	03-16-2011	SK Telecom Co., Ltd.		Abstract; corresponds to US-2012/0269268 A1

OTHER DOCUMENTS

Examiner Initials*	Cite No.	Include name of the author (in CAPITAL LETTERS), title of the article (when appropriate), title of the item (book, magazine, journal, serial, symposium, catalog, etc.), date, page(s) , volume-issue number(s), publisher, city and/or country where published.	English Language Translation Attached
	31	Ascenso et al., "Improving Frame Interpolation with Spatial Motion Smoothing for Pixel Domain Distributed Video Coding", Proceedings of the 5th EURASIP Conference on Speech and Image Processing, Multimedia Communications and Services, (January 2005), 6 pages.	
	32	Kao et al., "A High-Performance and Memory-Efficient Architecture for H.264/AVD Motion Estimation", 2008 IEEE International Conference on Multimedia and Expo, (June 23, 2008), 4 pages.	
	33	Marpe et al., "Video Compression Using Nested Quadtree Structures, Leaf Merging and Improved Techniques for Motion Representation and Entropy Coding", IEEE Transactions on Circuits and Systems for Video Technology, Volume 20, Issue 12, (December 2010), 10 pages.	
	34	Ng et al., "Block-Matching Translational and Rotational Motion Compensated Prediction Using Interpolated Reference Frame", EURASIP Journal on Advances in Signal Processing, Volume 2010, Article ID 385631 (November 30, 2010), 9 pages.	
	35	Nisar et al., "Content Adaptive Fast Motion Estimation Based on Spatio-Temporal Homogeneity Analysis and Motion Classification", Pattern Recognition Letters, Volume 33, Issue 1 (January 2012), 10 pages.	
	36	Oudin et al., "Block Merging for Quadtree-Based Video Coding", 2011 IEEE International conference on Multimedia and Expo, (July 11-15, 2011), 22 pages.	
	37	Po et al., "Multi-Directional Search Algorithm for Block-Based Motion Estimation", APCCAS 2008, 2008 IEEE Asia Pacific Conference on Circuits and Systems, (November 30-December 3, 2008), 4 pages.	
	38	Seferidis et al., "General Approach To Block-Matching Motion Estimation", Optical Engineering, Volume 32, Issue 7 (July 1, 1993), 11 pages.	

Examiner Signature	/NATHNAEL AYNALEM/	Date Considered	08/11/2021

*Examiner: Initial if reference considered, whether or not citation is in conformance with MPEP 609. Draw line through citation if not in conformance and not considered. Include copy of this form with next communication to applicant.

Submitted June 7, 2021

ALL REFERENCES CONSIDERED EXCEPT WHERE LINED THROUGH. /N.A./

Substitute for form SB08 (Revised 07/09)				Complete if Known	
INFORMATION DISCLOSURE STATEMENT BY APPLICANT *(Use as many sheets as necessary)*				Application Number	16/741,156
				Filing Date	January 13, 2020
				First Named Inventor	Bici et al.
				Art Unit	2488
				Examiner Name	Nathnael B. Aynalem
Sheet	3	of	3	Attorney Docket Number	042933/542643

OTHER DOCUMENTS

Examiner Initials*	Cite No.	Include name of the author (in CAPITAL LETTERS), title of the article (when appropriate), title of the item (book, magazine, journal, serial, symposium, catalog, etc.), date, page(s) , volume-issue number(s), publisher, city and/or country where published.	English Language Translation Attached
	39	Tourapis et al., "Fast Motion Estimation Within the H.264 Codec", 2003 International Conference on Multimedia and Expo, (July 6-9, 2003), 4 pages.	
	40	Tsai et al., "A Novel 3-D Predict Hexagon Search Algorithm for Fast Block Motion Estimation on H.264 Video Coding", IEEE Transactions on Circuits and Systems for Video Technology, Vol. 16, No. 12, (December 2006), 8 pages.	
	41	Wiegand et al., "Overview of the H.264/AVC Video Coding Standard", IEEE Transactions on Circuits and Systems for Video Technology, (July 2003), 19 pages.	
	42	Wong et al., "Block-Matching Translation and Zoom Motion-Compensated Prediction", 2009 IEEE International conference on Multimedia and Expo, (June 28-July 3, 2009), 4 pages.	
	43	Zhao et al., "Lossless Image Compression Using Super-Spatial Structure Prediction", IEEE Signal Processing Letters, Vol. 17, No. 4, (April 2010), 4 pages.	
	44	Zheng et al., "Unified Motion Vector Predictor Selection for Merge and AMVP", Joint Collaborative Team on Video Coding (JCT-VC) of ITU-T SG16 WP3 and ISO/IEC JTC1/SC29/WG11, 5th Meeting, (March 16-23, 2011), 5 pages.	

Examiner Signature		Date Considered	

*Examiner: Initial if reference considered, whether or not citation is in conformance with MPEP 609. Draw line through citation if not in conformance and not considered. Include copy of this form with next communication to applicant.

Submitted June 7, 2021

Substitute for form SB08 (Revised 07/09)				Complete if Known	
INFORMATION DISCLOSURE STATEMENT BY APPLICANT *(Use as many sheets as necessary)*				Application Number	16/741,156
				Filing Date	January 13, 2020
				First Named Inventor	Bici et al.
				Art Unit	2488
				Examiner Name	Nathnael B. Aynalem
Sheet	1	of	1	Attorney Docket Number	042933/542643

U. S. PATENT DOCUMENTS

Examiner Initials*	Cite No.	Document Number Number – Kind Code (if known)	Publication Date MM-DD-YYYY	Name of Patentee or Applicant of Cited Document	Pages, Columns, Lines, Where Relevant Passages of Relevant Figures Appear

FOREIGN PATENT DOCUMENTS

Examiner Initials	Cite No.	Foreign Patent Document Country Code – Number Kind Code (if known)	Publication Date MM-DD-YYYY	Name of Patentee or Applicant of Cited Document	Pages, Columns, Lines, Where Relevant Passages or Relevant Figures Appear	English Language Translation Attached

OTHER DOCUMENTS

Examiner Initials*	Cite No.	Include name of the author (in CAPITAL LETTERS), title of the article (when appropriate), title of the item (book, magazine, journal, serial, symposium, catalog, etc.), date, page(s) , volume-issue number(s), publisher, city and/or country where published.	English Language Translation Attached
	1	Extended European Search Report for European Application No. 20200049.3 dated June 11, 2021, 15 pages.	
	2	Lin et al., "Motion Vector Coding Techniques for HEVC", 2011 IEEE 13th International Workshop on Multimedia Signal Processing, (October 17-19, 2011), 7 pages.	

Examiner Signature	/NATHNAEL AYNALEM/	Date Considered	08/11/2021

*Examiner: Initial if reference considered, whether or not citation is in conformance with MPEP 609. Draw line through citation if not in conformance and not considered. Include copy of this form with next communication to applicant.

Submitted June 23, 2021

ALL REFERENCES CONSIDERED EXCEPT WHERE LINED THROUGH. /N.A./

PE2E SEARCH - Search History (Prior Art)

Ref #	Hits	Search Query	DBs	Default Operator	Plurals	British Equivalents	Time Stamp
L97	3373930	(predetermin$2 OR preset$3 OR pre adj1 determin$2 OR pre adj1 set$4 OR predefin$2 OR pre adj1 defin$2 OR preselect$2 OR preestablish$2 OR schedul$3 OR advance OR prescrib$2) WITH (order OR sequenc$3 OR arrangement OR direction)	(US-PGPUB; USPAT; USOCR; FPRS; EPO; JPO; DERWENT; IBM_TDB)	OR	ON	ON	2021/08/05 04:23 PM
L100	170378	((H04N19/51 OR H04N19/513 OR H04N19/50 OR H04N19/517 OR H04N19/52 OR H04N19/10 OR H04N19/103 OR H04N19/107 OR H04N19/109 OR H04N19/11 OR H04N19/33 OR H04N19/31 OR H04N19/503 OR H04N19/428 OR H04N19/55 OR H04N19/593 OR H04N19/59).cpc. OR (375/240.01-240.29).ccls.)	(US-PGPUB; USPAT; USOCR; FPRS; EPO; JPO; DERWENT; IBM_TDB)	OR	ON	ON	2021/08/05 04:25 PM
L102	9024	(select$5 OR choos$3 OR pick$3 OR elect$3 OR decid$3 OR choice$1 OR chosen OR specify$3) WITH (amvp$4 OR motion adj5 vector OR mv$4) WITH candidate$1	(US-PGPUB; USPAT; USOCR; FPRS; EPO; JPO; DERWENT; IBM_TDB)	OR	ON	ON	2021/08/05 05:33 PM
L103	596	97 SAME 102	(US-PGPUB; USPAT; USOCR; FPRS; EPO; JPO; DERWENT; IBM_TDB)	OR	ON	ON	2021/08/05 05:34 PM
L104	523	100 AND 103	(US-PGPUB; USPAT; USOCR; FPRS; EPO; JPO; DERWENT; IBM_TDB)	OR	ON	ON	2021/08/05 05:34 PM
L105	60350	(select$5 OR choos$3 OR pick$3 OR elect$3 OR decid$3 OR choice$1 OR chosen	(US-PGPUB; USPAT; USOCR; FPRS; EPO; JPO; DERWENT; IBM_TDB)	OR	ON	ON	2021/08/05 06:20 PM

Nokia Exhibit 2004, p. 190
Amazon.com v. Nokia
IPR2024-00605

		OR specify$3) WITH (order OR sequenc$3 OR arrangement OR direction) WITH candidate$					
L106	1962	102 SAME 105	(US-PGPUB; USPAT; USOCR; FPRS; EPO; JPO; DERWENT; IBM_TDB)	OR	ON	ON	2021/08/05 06:21 PM
L107	1688	100 AND 106	(US-PGPUB; USPAT; USOCR; FPRS; EPO; JPO; DERWENT; IBM_TDB)	OR	ON	ON	2021/08/05 06:21 PM
L109	1907	(select$5 OR choos$3 OR pick$3 OR elect$3 OR decid$3 OR choice$1 OR chosen OR specify$3) WITH (amvp$4 OR motion adj5 vector OR mv$4) WITH (order OR sequenc$3 OR arrangement OR direction) WITH candidate$	(US-PGPUB; USPAT; USOCR; FPRS; EPO; JPO; DERWENT; IBM_TDB)	OR	ON	ON	2021/08/05 06:24 PM
L111	156147	(compar$ OR comparision) WITH (motion OR mvp$2 OR mv OR amvp$2)	(US-PGPUB; USPAT; USOCR; EPO; JPO; DERWENT)	OR	ON	ON	2021/08/06 11:42 AM
L112	851699	(add$3 OR includ$3 OR exclud$3 OR remove) WITH (motion OR mvp$2 OR mv OR amvp$2)	(US-PGPUB; USPAT; USOCR; EPO; JPO; DERWENT)	OR	ON	ON	2021/08/06 11:45 AM
L113	36103	111 SAME 112	(US-PGPUB; USPAT; USOCR; FPRS; EPO; JPO; DERWENT; IBM_TDB)	OR	ON	ON	2021/08/06 11:45 AM
L119	12085	(add$3 OR includ$3) WITH (motion OR mvp$2 OR mv OR amvp$2) WITH list$	(US-PGPUB; USPAT; USOCR; EPO; JPO; DERWENT)	OR	ON	ON	2021/08/06 02:07 PM
L120	9022	(select$5 OR choos$3 OR pick$3 OR elect$3 OR decid$3 OR choice$1 OR chosen OR specify$3) WITH (amvp$4 OR motion adj5 vector OR mv$4) WITH candidate$	(US-PGPUB; USPAT; USOCR; FPRS; EPO; JPO; DERWENT; IBM_TDB)	OR	ON	ON	2021/08/06 02:08 PM
L121	2357	119 SAME 120	(US-PGPUB; USPAT; USOCR; FPRS; EPO; JPO; DERWENT; IBM_TDB)	OR	ON	ON	2021/08/06 02:08 PM
L122	2084	100 AND 121	(US-PGPUB; USPAT;	OR	ON	ON	2021/08/06

Nokia Exhibit 2004, p. 191
Amazon.com v. Nokia
IPR2024-00605

			USOCR; FPRS; EPO; JPO; DERWENT; IBM_TDB)				02:08 PM
L123	27	((US-5428403-A OR US-9503721-B2).did. AND USPT.dbnm.) OR ((US-20060193386-A1 OR US-20120195368-A1 OR US-20110170602-A1 OR US-20110194608-A1 OR US-20110200112-A1 OR US-20120128060-A1 OR US-20120257678-A1 OR US-20120008690-A1 OR US-20120134415-A1 OR US-20120230392-A1 OR US-20120263231-A1 OR US-20130287112-A1 OR US-20090220004-A1 OR US-20110194609-A1 OR US-20120263235-A1 OR US-20110176615-A1 OR US-20110211640-A1 OR US-20130022127-A1 OR US-20130101042-A1 OR US-20060280249-A1 OR US-20200154132-A1 OR US-20120134416-A1).did. AND PGPB.dbnm.) OR ((US-0543816-A OR US-1151955-A).did. AND USOC.dbnm.) OR ((US-20130114723-A1).did. AND DWPI.dbnm.)	(USPAT; US-PGPUB; FPRS; USOCR; IBM_TDB; EPO; JPO; DERWENT; FIT (AU, AP, AT, CA, CH, CN, DD, DE, EA, EP, ES, FR, GB, JP, KR, OA, RU, SU, WO))	OR	ON	ON	2021/08/06 02:09 PM
L124	10	123 AND 122	(US-PGPUB; USPAT; USOCR; FPRS; EPO; JPO; DERWENT; IBM_TDB)	OR	ON	ON	2021/08/06 02:09 PM
L126	299722	(divid$ OR partition$ OR subdivid$ OR segment$ OR split$) WITH (block$ OR macroblock$ OR coding adj5 unit OR cu) WITH (horizontal$ OR vertical$)	(US-PGPUB; USPAT; USOCR; FIT (AU, AP, AT, CA, CH, CN, DD, DE, EA, EP, ES, FR, GB, JP, KR, OA, RU, SU, WO); FPRS; EPO; JPO; DERWENT; IBM_TDB)	OR	ON	ON	2021/08/07 01:30 PM
L127	572	119 SAME 126	(US-PGPUB; USPAT; USOCR; FIT (AU, AP, AT, CA, CH, CN, DD,	OR	ON	ON	2021/08/07 01:32 PM

Nokia Exhibit 2004, p. 192
Amazon.com v. Nokia
IPR2024-00605

			DE, EA, EP, ES, FR, GB, JP, KR, OA, RU, SU, WO); FPRS; EPO; JPO; DERWENT; IBM_TDB)				
L128	75	100 AND 127	(US-PGPUB; USPAT; USOCR; FPRS; EPO; JPO; DERWENT; IBM_TDB)	OR	ON	ON	2021/08/07 01:33 PM
L129	1839	(remov$ OR exclud$ OR eliminat$ OR get adj5 rid) WITH (motion OR mvp$2 OR mv OR amvp$2) WITH list$	(US-PGPUB; USPAT; USOCR; EPO; JPO; DERWENT)	OR	ON	ON	2021/08/07 03:57 PM
L130	13	126 SAME 129	(US-PGPUB; USPAT; USOCR; EPO; JPO; DERWENT)	OR	ON	ON	2021/08/07 03:58 PM
L131	343	126 AND 129	(US-PGPUB; USPAT; USOCR; EPO; JPO; DERWENT)	OR	ON	ON	2021/08/07 04:17 PM
L133	206847	(remov$ OR exclud$ OR eliminat$ OR get adj5 rid) WITH (motion OR mvp$2 OR mv OR amvp$2)	(US-PGPUB; USPAT; USOCR; EPO; JPO; DERWENT)	OR	ON	ON	2021/08/07 04:43 PM
L134	78	126 SAME 133	(US-PGPUB; USPAT; USOCR; EPO; JPO; DERWENT)	OR	ON	ON	2021/08/07 04:43 PM
L135	984596	(determin$5 OR calculat$3 OR judg$3 OR evaluat$3 OR decid$3 OR comput$3 OR estimat$3 OR deriv$3 OR deduc$3 OR analy$4 OR analz$5 OR quantify$3 OR quantification OR specify$3 OR infer$4 OR extrapolate$3 OR extract$3 OR measur$3 OR obtain$3 OR check$3 OR generat$ OR designat$) WITH (divid$ OR partition$ OR subdivid$ OR segment$ OR split$) WITH (block$ OR macroblock$ OR coding adj5 unit OR cu)	(US-PGPUB; USPAT; USOCR; FIT (AU, AP, AT, CA, CH, CN, DD, DE, EA, EP, ES, FR, GB, JP, KR, OA, RU, SU, WO); FPRS; EPO; JPO; DERWENT; IBM_TDB)	OR	ON	ON	2021/08/07 04:47 PM
L136	543	133 SAME 135	(US-PGPUB; USPAT; USOCR; EPO; JPO; DERWENT)	OR	ON	ON	2021/08/07 04:48 PM
L137	1268	100 AND 136	(US-PGPUB; USPAT; USOCR; FIT (AU, AP, AT, CA, CH, CN, DD,	OR	ON	ON	2021/08/07 04:48 PM

Nokia Exhibit 2004, p. 193
Amazon.com v. Nokia
IPR2024-00605

			DE, EA, EP, ES, FR, GB, JP, KR, OA, RU, SU, WO); FPRS; EPO; JPO; DERWENT; IBM_TDB)				
L138	14952	(remov$ OR exclud$ OR eliminat$ OR get adj5 rid) WITH (motion OR mvp$2 OR mv OR amvp$2) WITH (candidat OR list$ OR set$)	(US-PGPUB; USPAT; USOCR; EPO; JPO; DERWENT)	OR	ON	ON	2021/08/07 04:56 PM
L140	168	135 SAME 138	(US-PGPUB; USPAT; USOCR; FPRS; EPO; JPO; DERWENT; IBM_TDB)	OR	ON	ON	2021/08/07 04:56 PM
L146	3246	((("NOKIA") near3 ("TECHNOLOGIES") near3 ("OY"))).AS,AANM.	(USPAT)	OR	ON	ON	2021/08/11 02:43 PM
L147	257	((("BICI") near3 ("Mehmet")) OR (("LAINEMA") near3 ("Jani")) OR (("UGUR") near3 ("Kemal"))).INV.	(US-PGPUB; USPAT; USOCR; EPO; JPO; DERWENT)	OR	ON	ON	2021/08/11 02:43 PM
L148	72	138 AND 146	(US-PGPUB; USPAT; USOCR; EPO; JPO; DERWENT)	OR	ON	ON	2021/08/11 02:44 PM
L149	54	138 AND 147	(US-PGPUB; USPAT; USOCR; EPO; JPO; DERWENT)	OR	ON	ON	2021/08/11 02:44 PM

PE2E SEARCH - Search History (Interference)

There are no Interference searches to show.

Nokia Exhibit 2004, p. 194
Amazon.com v. Nokia
IPR2024-00605

PTO/SB/06 (09-11)
Approved for use through 1/31/2014. OMB 0651-0032
U.S. Patent and Trademark Office; U.S. DEPARTMENT OF COMMERCE
Under the Paperwork Reduction Act of 1995, no persons are required to respond to a collection of information unless it displays a valid OMB control number.

PATENT APPLICATION FEE DETERMINATION RECORD

Substitute for Form PTO-875

Application or Docket Number	Filing Date	
16/741,156	01/13/2020	☐ To be Mailed

ENTITY: ☑ LARGE ☐ SMALL ☐ MICRO

APPLICATION AS FILED - PART I

FOR	(Column 1) NUMBER FILED	(Column 2) NUMBER EXTRA		RATE ($)	FEE ($)
☐ BASIC FEE (37 CFR 1.16(a), (b), or (c))	N/A	N/A		N/A	
☐ SEARCH FEE (37 CFR 1.16(k), (i), or (m))	N/A	N/A		N/A	
☐ EXAMINATION FEE (37 CFR 1.16(o), (p), or (q))	N/A	N/A		N/A	
TOTAL CLAIMS (37 CFR 1.16(i))	minus 20 =	*		x $100 =	
INDEPENDENT CLAIMS (37 CFR 1.16(h))	minus 3 =	*		x $460 =	
☐ APPLICATION SIZE FEE (37 CFR 1.16(s))	If the specification and drawings exceed 100 sheets of paper, the application size fee due is $310 ($155 for small entity) for each additional 50 sheets or fraction thereof. See 35 U.S.C. 41(a)(1)(G) and 37 CFR 1.16(s).				
☐ MULTIPLE DEPENDENT CLAIM PRESENT (37 CFR 1.16(j))					
* If the difference in column 1 is less than zero, enter "0" in column 2.				TOTAL	

APPLICATION AS AMENDED - PART II

AMENDMENT	02/16/2022	(Column 1) CLAIMS REMAINING AFTER AMENDMENT		(Column 2) HIGHEST NUMBER PREVIOUSLY PAID FOR	(Column 3) PRESENT EXTRA		RATE ($)	ADDITIONAL FEE ($)
	Total (37 CFR 1.16(i))	* 36	Minus	** 36	= 0		x $100 =	0
	Independent (37 CFR 1.16(h))	* 6	Minus	*** 6	= 0		x $480 =	0
	☐ Application Size Fee (37 CFR 1.16(s))							
	☐ FIRST PRESENTATION OF MULTIPLE DEPENDENT CLAIM (37 CFR 1.16(j))							
							TOTAL ADD'L FEE	0

AMENDMENT		(Column 1) CLAIMS REMAINING AFTER AMENDMENT		(Column 2) HIGHEST NUMBER PREVIOUSLY PAID FOR	(Column 3) PRESENT EXTRA		RATE ($)	ADDITIONAL FEE ($)
	Total (37 CFR 1.16(i))	*	Minus	**	=		x $0 =	
	Independent (37 CFR 1.16(h))	*	Minus	***	=		x $0 =	
	☐ Application Size Fee (37 CFR 1.16(s))							
	☐ FIRST PRESENTATION OF MULTIPLE DEPENDENT CLAIM (37 CFR 1.16(j))							
							TOTAL ADD'L FEE	

* If the entry in column 1 is less than the entry in column 2, write "0" in column 3.	SLIE
** If the "Highest Number Previously Paid For" IN THIS SPACE is less than 20, enter "20".	/MONIQUE BENJAMIN/
*** If the "Highest Number Previously Paid For" IN THIS SPACE is less than 3, enter "3".	
The "Highest Number Previously Paid For" (Total or Independent) is the highest number found in the appropriate box in column 1.	

This collection of information is required by 37 CFR 1.16. The information is required to obtain or retain a benefit by the public which is to file (and by the USPTO to process) an application. Confidentiality is governed by 35 U.S.C. 122 and 37 CFR 1.14. This collection is estimated to take 12 minutes to complete, including gathering, preparing, and submitting the completed application form to the USPTO. Time will vary depending upon the individual case. Any comments on the amount of time you require to complete this form and/or suggestions for reducing this burden, should be sent to the Chief Information Officer, U.S. Patent and Trademark Office, U.S. Department of Commerce, P.O. Box 1450, Alexandria, VA 22313-1450. DO NOT SEND FEES OR COMPLETED FORMS TO THIS ADDRESS. **SEND TO: Commissioner for Patents, P.O. Box 1450, Alexandria, VA 22313-1450.**

If you need assistance in completing the form, call 1-800-PTO-9199 and select option 2.

PTO/SB/06 (09-11)
Approved for use through 1/31/2014. OMB 0651-0032
U.S. Patent and Trademark Office; U.S. DEPARTMENT OF COMMERCE
Under the Paperwork Reduction Act of 1995, no persons are required to respond to a collection of information unless it displays a valid OMB control number.

PATENT APPLICATION FEE DETERMINATION RECORD Substitute for Form PTO-875	Application or Docket Number 16/741,156	Filing Date 01/13/2020	☐ To be Mailed

ENTITY: ☑ LARGE ☐ SMALL ☐ MICRO

APPLICATION AS FILED - PART I

FOR	(Column 1) NUMBER FILED	(Column 2) NUMBER EXTRA		RATE ($)	FEE ($)
☐ BASIC FEE (37 CFR 1.16(a), (b), or (c))	N/A	N/A		N/A	
☐ SEARCH FEE (37 CFR 1.16(k), (i), or (m))	N/A	N/A		N/A	
☐ EXAMINATION FEE (37 CFR 1.16(o), (p), or (q))	N/A	N/A		N/A	
TOTAL CLAIMS (37 CFR 1.16(i))	minus 20 =	*		x $100 =	
INDEPENDENT CLAIMS (37 CFR 1.16(h))	minus 3 =	*		x $460 =	
☐ APPLICATION SIZE FEE (37 CFR 1.16(s))	If the specification and drawings exceed 100 sheets of paper, the application size fee due is $310 ($155 for small entity) for each additional 50 sheets or fraction thereof. See 35 U.S.C. 41(a)(1)(G) and 37 CFR 1.16(s).				
☐ MULTIPLE DEPENDENT CLAIM PRESENT (37 CFR 1.16(j))					
* If the difference in column 1 is less than zero, enter "0" in column 2.				TOTAL	

APPLICATION AS AMENDED - PART II

AMENDMENT	02/16/2022	(Column 1) CLAIMS REMAINING AFTER AMENDMENT		(Column 2) HIGHEST NUMBER PREVIOUSLY PAID FOR	(Column 3) PRESENT EXTRA		RATE ($)	ADDITIONAL FEE ($)
	Total (37 CFR 1.16(i))	* 36	Minus	** 30	= 6		x $100 =	600
	Independent (37 CFR 1.16(h))	* 6	Minus	*** 6	= 0		x $480 =	0
	☐ Application Size Fee (37 CFR 1.16(s))							
	☐ FIRST PRESENTATION OF MULTIPLE DEPENDENT CLAIM (37 CFR 1.16(j))							
							TOTAL ADD'L FEE	600

AMENDMENT		(Column 1) CLAIMS REMAINING AFTER AMENDMENT		(Column 2) HIGHEST NUMBER PREVIOUSLY PAID FOR	(Column 3) PRESENT EXTRA		RATE ($)	ADDITIONAL FEE ($)
	Total (37 CFR 1.16(i))	*	Minus	**	=		x $0 =	
	Independent (37 CFR 1.16(h))	*	Minus	***	=		x $0 =	
	☐ Application Size Fee (37 CFR 1.16(s))							
	☐ FIRST PRESENTATION OF MULTIPLE DEPENDENT CLAIM (37 CFR 1.16(j))							
							TOTAL ADD'L FEE	

* If the entry in column 1 is less than the entry in column 2, write "0" in column 3.	LIE
** If the "Highest Number Previously Paid For" IN THIS SPACE is less than 20, enter "20".	/MARCUS M WASHINGTON/
*** If the "Highest Number Previously Paid For" IN THIS SPACE is less than 3, enter "3".	
The "Highest Number Previously Paid For" (Total or Independent) is the highest number found in the appropriate box in column 1.	

This collection of information is required by 37 CFR 1.16. The information is required to obtain or retain a benefit by the public which is to file (and by the USPTO to process) an application. Confidentiality is governed by 35 U.S.C. 122 and 37 CFR 1.14. This collection is estimated to take 12 minutes to complete, including gathering, preparing, and submitting the completed application form to the USPTO. Time will vary depending upon the individual case. Any comments on the amount of time you require to complete this form and/or suggestions for reducing this burden, should be sent to the Chief Information Officer, U.S. Patent and Trademark Office, U.S. Department of Commerce, P.O. Box 1450, Alexandria, VA 22313-1450. DO NOT SEND FEES OR COMPLETED FORMS TO THIS ADDRESS. **SEND TO: Commissioner for Patents, P.O. Box 1450, Alexandria, VA 22313-1450.**

If you need assistance in completing the form, call 1-800-PTO-9199 and select option 2.

PATENT

IN THE UNITED STATES PATENT AND TRADEMARK OFFICE

Appl. No.:	16/741,156	Confirmation No.:	3751
Inventor(s):	Mehmet Oguz Bici, et al.		
Filed:	January 13, 2020		
Art Unit:	2488		
Examiner:	Aynalem, Nathnael B		
Title:	METHOD FOR CODING AND AN APPARATUS		

Docket No.: 042933/542643
Customer No.: 10949

Mail Stop Amendment
Commissioner for Patents
P.O. Box 1450
Alexandria, VA 22313-1450

AMENDMENT UNDER 37 C.F.R. § 1.111

In response to the Office Action, please amend the above-identified application as follows:

Amendments to the Claims are reflected in the listing of claims beginning on page 2 of this paper.

Remarks begin on page 20 of this paper.

Nokia Exhibit 2004, p. 197
Amazon.com v. Nokia
IPR2024-00605

Amendments to the Claims:

1. (Currently Amended) A method comprising:

~~selecting~~ determining a first spatial motion vector prediction candidate from a set of spatial motion vector prediction candidates for a block of pixels ~~as a potential spatial motion vector prediction candidate to be included in a motion vector prediction list for a prediction unit of the block of pixels, where the motion vector prediction list comprises motion information of the spatial motion vector prediction candidates and is utilized to identify motion vector prediction candidates of which one spatial motion vector prediction candidate from the motion vector prediction list is signaled as the motion information for the prediction unit~~;

comparing motion information of the first spatial motion vector prediction candidate with motion information of spatial motion vector prediction candidates in a subset of the set of spatial motion vector prediction candidates, wherein the subset is less than the set, and wherein the subset is determined ~~that are~~ based on a location of the block associated with the first spatial motion vector prediction candidate;

determining to include ~~or exclude~~ the first spatial motion vector prediction ~~candiate~~ candidate in [[the]]a motion vector prediction list for the block of pixels based on the comparing;

selecting one motion vector prediction candidate from the motion vector prediction list to represent a motion vector prediction for the block of pixels; and

performing a motion compensated prediction based on the selected motion vector prediction candidate to construct the block of pixels~~causing information identifying the one spatial motion vector prediction candidate from the motion vector prediction list to be transmitted to a decoder or to be stored~~.

2. (Currently Amended) The method according to claim 1 further comprising ~~selecting~~ processing spatial motion vector prediction candidates from the set of spatial motion vector prediction candidates ~~as the potential spatial motion vector prediction candidate~~ in a predetermined order.

Nokia Exhibit 2004, p. 198
Amazon.com v. Nokia
IPR2024-00605

3. (Canceled)

4. (Currently Amended) The method according to claim 1 further comprising examining whether the block of pixels is divided into a first prediction unit and a second prediction unit; and if so, excluding ~~the potential~~ a spatial motion vector prediction candidate of the set of spatial motion vector prediction candidates from the motion vector prediction list for a prediction unit of the block of pixels if the prediction unit of the block of pixels is the second prediction unit.

5. (Currently Amended) The method according to claim 1, further comprising

determining a maximum number of spatial motion vector prediction candidates to be included in the motion vector prediction list; and

limiting the number of spatial motion vector prediction candidates in the motion vector prediction list to be smaller or equal to the maximum number.

6. (Currently Amended) The method according to claim [[5]]1 comprising~~:~~

~~examining, if the number of spatial motion vector prediction candidates in the motion vector prediction list is smaller than the maximum number;~~

~~if so, examining whether the prediction unit to which the potential spatial motion vector prediction candidate belongs is available for motion prediction;~~

~~if so, performing~~ at least one of the following:

for a potential spatial motion vector prediction candidate on a left side of [[the]]a prediction unit of the block of pixels, excluding the potential spatial motion vector prediction candidate from the motion vector prediction list if any of the following conditions are fulfilled:

– the ~~received~~ block of pixels is vertically divided into a first prediction unit and a second prediction unit; or

– the ~~received~~ block of pixels is horizontally divided into a first prediction unit and a second prediction unit, and if the prediction unit is the second prediction unit,

Nokia Exhibit 2004, p. 199
Amazon.com v. Nokia
IPR2024-00605

and the potential spatial motion vector prediction candidate has essentially similar motion information than a spatial motion vector prediction candidate above the prediction unit;

for a potential spatial motion vector prediction candidate above the prediction unit, excluding the potential spatial motion vector prediction candidate from the motion vector prediction list if any of the following conditions are fulfilled:

– the ~~received~~ block of pixels is horizontally divided into a first prediction unit and a second prediction unit, and the prediction unit is the second prediction unit; or

– the potential spatial motion vector prediction candidate has essentially similar motion information than the spatial motion vector prediction candidate on the left side of the prediction unit;

for a potential spatial motion vector prediction candidate, which is on a right side of the potential spatial motion vector prediction candidate above the prediction unit, excluding the potential spatial motion vector prediction candidate from the motion vector prediction list if the potential spatial motion vector prediction candidate has essentially similar motion information than the spatial motion vector prediction candidate above the prediction unit;

for a potential spatial motion vector prediction candidate, which is below the potential spatial motion vector prediction candidate on the left side of the prediction unit, excluding the potential spatial motion vector prediction candidate from the motion vector prediction list if the potential spatial motion vector prediction candidate has essentially similar motion information than the spatial motion vector prediction candidate on the left side of the prediction unit;

for a potential spatial motion vector prediction candidate cornerwise neighbouring the prediction unit, excluding the potential spatial motion vector prediction candidate from the motion vector prediction list if any of the following conditions are fulfilled:

– ~~all the other potential~~<u>a maximum number of</u> spatial motion vector prediction candidates have been included in the motion vector prediction list;

– the potential spatial motion vector prediction candidate has essentially similar motion information than the spatial motion vector prediction candidate above the prediction unit; or

Nokia Exhibit 2004, p. 200
Amazon.com v. Nokia
IPR2024-00605

– the potential spatial motion vector prediction candidate has essentially similar motion information than the spatial motion vector prediction candidate on the left side of the prediction unit.

7. (Currently Amended) The method according to claim 1 further comprising including a temporal motion vector prediction candidate into the motion vector prediction list.

8. (Canceled)

9. (Currently Amended) A method comprising:

~~selecting~~ determining a first spatial motion vector prediction candidate from a set of spatial motion vector prediction candidates for an encoded block of pixels ~~as a potential spatial motion vector prediction candidate to be included in a motion vector prediction list for a prediction unit of the encoded block of pixels, where the motion vector prediction list comprises motion information of the spatial motion vector prediction candidates~~;

comparing motion information of the first spatial motion vector prediction candidate with motion information of another spatial motion vector prediction candidate of a subset of the set of spatial motion vector prediction candidates, wherein the subset is less than the set, and wherein the subset is determined ~~that are~~ based on a location of the block associated with the first spatial motion vector prediction candidate;

determining to include ~~or exclude~~ the first spatial motion vector prediction ~~candiate~~ candidate in the motion vector prediction list for the encoded block of pixels based on the comparing; and

selecting a spatial motion vector prediction candidate from the motion vector prediction list for use in decoding the encoded block of pixels~~, wherein the spatial motion vector prediction candidate is selected from the motion vector prediction list using information that was received identifying a respective spatial motion vector prediction candidate from the motion vector prediction list constructed by an encoder~~.

Nokia Exhibit 2004, p. 201
Amazon.com v. Nokia
IPR2024-00605

10. (Canceled)

11. (Currently Amended) The method according to claim 9 further comprising examining whether the ~~received~~ encoded block of pixels is divided into a first prediction unit and a second prediction unit; and if so, excluding ~~the potentiala~~ spatial motion vector prediction candidate of the set of spatial motion vector prediction candidates from the motion vector prediction list for a prediction unit of the block of pixels if the prediction unit of the block of pixels is the second prediction unit.

12. (Currently Amended) The method according to claim 9 further comprising

determining a maximum number of spatial motion vector prediction candidates to be included in the motion vector prediction list; and

limiting the number of spatial motion vector prediction candidates in the motion vector prediction list to be smaller or equal to the maximum number.

13. (Currently Amended) The method according to claim [[12]]9 further comprising~~:~~

~~examining, if the number of spatial motion vector prediction candidates in the motion vector prediction list is smaller than the maximum number;~~

~~if so, examining whether the prediction unit to which the potential spatial motion vector prediction candidate belongs is available for motion prediction;~~

~~if so, performing~~ at least one of the following:

for a potential spatial motion vector prediction candidate on a left side of [[the]]a prediction unit of the encoded block of pixels, excluding the potential spatial motion vector prediction candidate from the motion vector prediction list if any of the following conditions are fulfilled:

– the ~~received~~ encoded block of pixels is vertically divided into a first prediction unit and a second prediction unit; or

– the ~~received~~ encoded block of pixels is horizontally divided into a first prediction unit and a second prediction unit, and if the prediction unit is the second

Nokia Exhibit 2004, p. 202
Amazon.com v. Nokia
IPR2024-00605

prediction unit, and the potential spatial motion vector prediction candidate has essentially similar motion information than a spatial motion vector prediction candidate above the prediction unit;

for a potential spatial motion vector prediction candidate above the prediction unit, excluding the potential spatial motion vector prediction candidate from the motion vector prediction list if any of the following conditions are fulfilled:

– the ~~received~~ encoded block of pixels is horizontally divided into a first prediction unit and a second prediction unit, and the prediction unit is the second prediction unit; or

– the potential spatial motion vector prediction candidate has essentially similar motion information than the spatial motion vector prediction candidate on the left side of the prediction unit;

for a potential spatial motion vector prediction candidate, which is on a right side of the potential spatial motion vector prediction candidate above the prediction unit, excluding the potential spatial motion vector prediction candidate from the motion vector prediction list if the potential spatial motion vector prediction candidate has essentially similar motion information than the spatial motion vector prediction candidate above the prediction unit;

for a potential spatial motion vector prediction candidate, which is below the potential spatial motion vector prediction candidate on the left side of the prediction unit, excluding the potential spatial motion vector prediction candidate from the motion vector prediction list if the potential spatial motion vector prediction candidate has essentially similar motion information than the spatial motion vector prediction candidate on the left side of the prediction unit; and

for a potential spatial motion vector prediction candidate cornerwise neighbouring the prediction unit, excluding the potential spatial motion vector prediction candidate from the motion vector prediction list if any of the following conditions are fulfilled:

– ~~all the other potential~~<u>a maximum number of</u> spatial motion vector prediction candidates have been included in the motion vector prediction list;

Nokia Exhibit 2004, p. 203
Amazon.com v. Nokia
IPR2024-00605

– the potential spatial motion vector prediction candidate has essentially similar motion information than the spatial motion vector prediction candidate above the prediction unit; or

– the potential spatial motion vector prediction candidate has essentially similar motion information than the spatial motion vector prediction candidate on the left side of the prediction unit.

14. (Currently Amended) The method according to claim 9 further comprising ~~selecting one~~ including a temporal motion vector prediction candidate ~~from~~ into the motion vector prediction list ~~to represent a motion vector prediction for the encoded block of pixels~~.

15. (Currently Amended) An apparatus comprising a processor and a memory including computer program code, the memory and the computer program code configured to, with the processor, cause the apparatus to:

~~select~~ determine a first spatial motion vector prediction candidate from a set of spatial motion vector prediction candidates for a block of pixels ~~as a potential spatial motion vector prediction candidate to be included in a motion vector prediction list for a prediction unit of the block of pixels, where the motion vector prediction list comprises motion information of the spatial motion vector prediction candidates and is utilized to identify motion vector prediction candidates of which one spatial motion vector prediction candidate from the motion vector prediction list is signaled as the motion information for the prediction unit~~;

compare motion information of the first spatial motion vector prediction candidate with motion information of the spatial motion vector prediction candidate in a subset of the set of spatial motion vector prediction candidates, wherein the subset is less than the set, and wherein the subset is determined ~~that are~~ based on a location of the block associated with the first spatial motion vector prediction candidate;

determine to include ~~or exclude~~ the first spatial motion vector prediction ~~candiate~~ candidate in [[the]]a motion vector prediction list for the block of pixels based on comparison of

Nokia Exhibit 2004, p. 204
Amazon.com v. Nokia
IPR2024-00605

the motion information of the first spatial motion vector candidate with motion information of the spatial motion vector prediction candidate;

select one motion vector prediction candidate from the motion vector prediction list to represent a motion vector prediction for the block of pixels; and

perform a motion compensated prediction based on the selected motion vector prediction candidate to construct the block of pixels~~cause information identifying the one spatial motion vector prediction candidate from the motion vector prediction list to be transmitted to a decoder or to be stored~~.

16. (Currently Amended) The apparatus according to claim 15 wherein the apparatus is further caused to ~~select~~ process spatial motion vector prediction candidates from the set of spatial motion vector prediction candidates ~~as the potential spatial motion vector prediction candidate~~ in a predetermined order.

17. (Canceled)

18. (Currently Amended) The apparatus according to claim 15 wherein the apparatus is further caused to examine whether the block of pixels is divided into a first prediction unit and a second prediction unit; and if so, exclude ~~the potential~~ a spatial motion vector prediction candidate of the set of spatial motion vector prediction candidates from the motion vector prediction list for a prediction unit of the block of pixels if the prediction unit of the block of pixels is the second prediction unit.

19. (Currently Amended) The apparatus according to claim 15, wherein the apparatus is further caused to:

determine a maximum number of spatial motion vector prediction candidates to be included in the motion vector prediction list; and

limit the number of spatial motion vector prediction candidates in the motion vector prediction list to be smaller or equal to the maximum number.

Nokia Exhibit 2004, p. 205
Amazon.com v. Nokia
IPR2024-00605

20. (Currently Amended) The apparatus according to claim [[19]]15 wherein the apparatus is further caused to~~:~~

~~examine, if the number of spatial motion vector prediction candidates in the motion vector prediction list is smaller than the maximum number;~~

~~if so, examine whether the prediction unit to which the potential spatial motion vector prediction candidate belongs is available for motion prediction;~~

~~if so,~~ perform at least one of the following:

for a potential spatial motion vector prediction candidate on a left side of [[the]]a prediction unit of the block of pixels, exclude the potential spatial motion vector prediction candidate from the motion vector prediction list if any of the following conditions are fulfilled:

– the ~~received~~ block of pixels is vertically divided into a first prediction unit and a second prediction unit; or

– the ~~received~~ block of pixels is horizontally divided into a first prediction unit and a second prediction unit, and if the prediction unit is the second prediction unit, and the potential spatial motion vector prediction candidate has essentially similar motion information than a spatial motion vector prediction candidate above the prediction unit;

for a potential spatial motion vector prediction candidate above the prediction unit, exclude the potential spatial motion vector prediction candidate from the motion vector prediction list if any of the following conditions are fulfilled:

– the ~~received~~ block of pixels is horizontally divided into a first prediction unit and a second prediction unit, and the prediction unit is the second prediction unit; or

– the potential spatial motion vector prediction candidate has essentially similar motion information than the spatial motion vector prediction candidate on the left side of the prediction unit;

for a potential spatial motion vector prediction candidate, which is on a right side of the potential spatial motion vector prediction candidate above the prediction unit, exclude the potential spatial motion vector prediction candidate from the motion vector prediction list if the

Nokia Exhibit 2004, p. 206
Amazon.com v. Nokia
IPR2024-00605

potential spatial motion vector prediction candidate has essentially similar motion information than the spatial motion vector prediction candidate above the prediction unit;

for a potential spatial motion vector prediction candidate, which is below the potential spatial motion vector prediction candidate on the left side of the prediction unit, exclude the potential spatial motion vector prediction candidate from the motion vector prediction list if the potential spatial motion vector prediction candidate has essentially similar motion information than the spatial motion vector prediction candidate on the left side of the prediction unit;

for a potential spatial motion vector prediction candidate cornerwise neighbouring the prediction unit, exclude the potential spatial motion vector prediction candidate from the motion vector prediction list if any of the following conditions are fulfilled:

– ~~all the other potential~~a maximum number of spatial motion vector prediction candidates have been included in the motion vector prediction list;

– the potential spatial motion vector prediction candidate has essentially similar motion information than the spatial motion vector prediction candidate above the prediction unit; or

– the potential spatial motion vector prediction candidate has essentially similar motion information than the spatial motion vector prediction candidate on the left side of the prediction unit.

21. (Currently Amended) The apparatus according to claim 15 wherein the apparatus is further caused to include a temporal motion vector prediction candidate into the motion vector prediction list.

22. (Canceled)

23. (Currently Amended) An apparatus comprising a processor and a memory including computer program code, the memory and the computer program code configured to, with the processor, cause the apparatus to:

Nokia Exhibit 2004, p. 207
Amazon.com v. Nokia
IPR2024-00605

~~select~~ determine a first spatial motion vector prediction candidate from a set of spatial motion vector prediction candidates for an encoded block of pixels ~~as a potential spatial motion vector prediction candidate to be included in a motion vector prediction list for a prediction unit of the encoded block of pixels, where the motion vector prediction list comprises motion information of the spatial motion vector prediction candidates~~;

compare motion information of the first spatial motion vector prediction candidate with motion information of the spatial motion vector prediction candidate in a subset of the set of spatial motion vector prediction candidates, wherein the subset is less than the set, and wherein the subset is determined ~~that are~~ based on a location of the block associated with the first spatial motion vector prediction candidate;

determine to include ~~or exclude~~ the first spatial motion vector prediction ~~candiate~~ candidate in the motion vector prediction list for the encoded block of pixels based on comparison of the motion information of the first spatial motion vector candidate with motion information of the spatial motion vector prediction candidate; and

select a spatial motion vector prediction candidate from the motion vector prediction list for use in decoding the encoded block of pixels~~, wherein the spatial motion vector prediction candidate is selected from the motion vector prediction list using information that was received identifying a respective spatial motion vector prediction candidate from the motion vector prediction list constructed by an encoder~~.

24. (Canceled)

25. (Currently Amended) The apparatus according to claim 23 wherein the apparatus is further caused to examine whether the received encoded block of pixels is divided into a first prediction unit and a second prediction unit; and if so, exclude ~~the potential~~ a spatial motion vector prediction candidate of the set of spatial motion vector prediction candidates from the motion vector prediction list for a prediction unit of the block of pixels if the prediction unit of the block of pixels is the second prediction unit.

Nokia Exhibit 2004, p. 208
Amazon.com v. Nokia
IPR2024-00605

26. (Currently Amended) The apparatus according to claim 23 wherein the apparatus is further caused to:

determine a maximum number of spatial motion vector prediction candidates to be included in the motion vector prediction list; and

limit the number of spatial motion vector prediction candidates in the motion vector prediction list to be smaller or equal to the maximum number.

27. (Currently Amended) The apparatus according to claim [[26]]23 wherein the apparatus is further caused to~~:~~

~~examine if the number of spatial motion vector prediction candidates in the motion vector prediction list is smaller than the maximum number;~~

~~if so, examine whether the prediction unit to which the potential spatial motion vector prediction candidate belongs is available for motion prediction;~~

~~if so,~~ perform at least one of the following:

for a potential spatial motion vector prediction candidate on a left side of [[the]]a prediction unit of the encoded block of pixels, exclude the potential spatial motion vector prediction candidate from the motion vector prediction list if any of the following conditions are fulfilled:

– the ~~received~~ encoded block of pixels is vertically divided into a first prediction unit and a second prediction unit; or

– the ~~received~~ encoded block of pixels is horizontally divided into a first prediction unit and a second prediction unit, and if the prediction unit is the second prediction unit, and the potential spatial motion vector prediction candidate has essentially similar motion information than a spatial motion vector prediction candidate above the prediction unit;

for a potential spatial motion vector prediction candidate above the prediction unit, exclude the potential spatial motion vector prediction candidate from the motion vector prediction list if any of the following conditions are fulfilled:

Nokia Exhibit 2004, p. 209
Amazon.com v. Nokia
IPR2024-00605

– the ~~received~~ encoded block of pixels is horizontally divided into a first prediction unit and a second prediction unit, and the prediction unit is the second prediction unit; or

– the potential spatial motion vector prediction candidate has essentially similar motion information than the spatial motion vector prediction candidate on the left side of the prediction unit;

for a potential spatial motion vector prediction candidate, which is on a right side of the potential spatial motion vector prediction candidate above the prediction unit, exclude the potential spatial motion vector prediction candidate from the motion vector prediction list if the potential spatial motion vector prediction candidate has essentially similar motion information than the spatial motion vector prediction candidate above the prediction unit;

for a potential spatial motion vector prediction candidate, which is below the potential spatial motion vector prediction candidate on the left side of the prediction unit, exclude the potential spatial motion vector prediction candidate from the motion vector prediction list if the potential spatial motion vector prediction candidate has essentially similar motion information than the spatial motion vector prediction candidate on the left side of the prediction unit; and

for a potential spatial motion vector prediction candidate cornerwise neighbouring the prediction unit, exclude the potential spatial motion vector prediction candidate from the motion vector prediction list if any of the following conditions are fulfilled:

– ~~all the other potential~~a maximum number of spatial motion vector prediction candidates have been included in the motion vector prediction list;

– the potential spatial motion vector prediction candidate has essentially similar motion information than the spatial motion vector prediction candidate above the prediction unit; or

– the potential spatial motion vector prediction candidate has essentially similar motion information than the spatial motion vector prediction candidate on the left side of the prediction unit.

28. (Currently Amended) the apparatus according to claim 23 wherein the apparatus is further caused to ~~select one~~ include a temporal motion vector prediction candidate ~~from~~ into the motion vector prediction list ~~to represent a motion vector prediction for the encoded block of pixels~~.

29. (Currently Amended) A non-transitory computer readable medium having stored thereon a computer executable program code for use by an encoder, said program codes comprising instructions for:

~~selecting~~ determining a first spatial motion vector prediction candidate from a set of spatial motion vector prediction candidates for a block of pixels ~~as a potential spatial motion vector prediction candidate to be included in a motion vector prediction list for a prediction unit of the block of pixels, where the motion vector prediction list comprises motion information of the spatial motion vector prediction candidates and is utilized to identify motion vector prediction candidates of which one spatial motion vector prediction candidate from the motion vector prediction list is signaled as the motion information for the prediction unit~~;

comparing motion information of the first spatial motion vector prediction candidate with motion information of the spatial motion vector prediction candidate in a subset of the set of spatial motion vector prediction candidates, wherein the subset is less than the set, and wherein the subset is determined ~~that are~~ based on a location of the block associated with the first spatial motion vector prediction candidate;

determining to include ~~or exclude~~ the first spatial motion vector prediction ~~candiate~~ candidate in [[the]]a motion vector prediction list for the block of pixels based on the comparing;

selecting one motion vector prediction candidate from the motion vector prediction list to represent a motion vector prediction for the block of pixels; and

performing a motion compensated prediction based on the selected motion vector prediction candidate to construct the block of pixels~~causing information identifying the one spatial motion vector prediction candidate from the motion vector prediction list to be transmitted to a decoder or to be stored~~.

Nokia Exhibit 2004, p. 211
Amazon.com v. Nokia
IPR2024-00605

30. (Currently Amended) A non-transitory computer readable medium having stored thereon a computer executable program code for use by a decoder, said program codes comprising instructions for:

~~selecting~~ determining a first spatial motion vector prediction candidate from a set of spatial motion vector prediction candidates for an encoded block of pixels~~ as a potential spatial motion vector prediction candidate to be included in a motion vector prediction list for a prediction unit of the encoded block of pixels, where the motion vector prediction list comprises motion information of the spatial motion vector prediction candidates~~;

comparing motion information of the first spatial motion vector prediction candidate with motion information of the spatial motion vector prediction candidate in a subset of the set of spatial motion vector prediction candidates, wherein the subset is less than the set, and wherein the subset is determined~~ that are~~ based on a location of the block associated with the first spatial motion vector prediction candidate;

determining to include ~~or exclude~~ the first spatial motion vector prediction ~~candiate~~candidate in the motion vector prediction list for the encoded block of pixels based on the comparing; and

selecting a spatial motion vector prediction candidate from the motion vector prediction list for use in decoding the encoded block of pixels~~, wherein the spatial motion vector prediction candidate is selected from the motion vector prediction list using information that was received identifying a respective spatial motion vector prediction candidate from the motion vector prediction list constructed by an encoder~~.

31. (New) The method according to Claim 1 further comprising processing the spatial motion vector prediction candidates from the set of spatial motion vector prediction candidates in order as follows:

spatial motion vector prediction candidate A1 located on a left side of a prediction unit of the block of pixels,

spatial motion vector prediction candidate B1 located above the prediction unit,

Nokia Exhibit 2004, p. 212
Amazon.com v. Nokia
IPR2024-00605

spatial motion vector prediction candidate B0 located on a right side of the prediction unit,

spatial motion vector prediction candidate A0 located below the spatial motion vector prediction candidate A1, and

spatial motion vector prediction candidate B2 located on a same column as the spatial motion vector prediction candidate A1 and on a same row as the spatial motion vector prediction candidate B1.

32. (New) The method according to claim 1 wherein comparing motion information comprises performing an identicality or an equivalence check between the motion information of the first spatial motion vector prediction candidate and the motion information of spatial motion vector prediction candidates in the subset of the set of spatial motion vector prediction candidates.

33. (New) The method according to claim 1 wherein the motion information comprises a motion vector value and a reference picture index.

34. (New) The apparatus according to Claim 15 wherein the apparatus is further caused to process the spatial motion vector prediction candidates from the set of spatial motion vector prediction candidates in order as follows:

spatial motion vector prediction candidate A1 located on a left side of a prediction unit of the block of pixels,

spatial motion vector prediction candidate B1 located above the prediction unit,

spatial motion vector prediction candidate B0 located on a right side of the prediction unit,

spatial motion vector prediction candidate A0 located below the spatial motion vector prediction candidate A1, and

Nokia Exhibit 2004, p. 213
Amazon.com v. Nokia
IPR2024-00605

spatial motion vector prediction candidate B2 located on a same column as the spatial motion vector prediction candidate A1 and on a same row as the spatial motion vector prediction candidate B1.

35. (New) The apparatus according to claim 15 wherein the apparatus is further caused to compare motion information by performing an identicality or an equivalence check between the motion information of the first spatial motion vector prediction candidate and the motion information of spatial motion vector prediction candidates in the subset of the set of spatial motion vector prediction candidates.

36. (New) The apparatus according to claim 15 wherein the motion information comprises a motion vector value and a reference picture index.

37. (New) The method according to Claim 9 further comprising processing the spatial motion vector prediction candidates from the set of spatial motion vector prediction candidates in order as follows:

spatial motion vector prediction candidate A1 located on a left side of a prediction unit of the block of pixels,

spatial motion vector prediction candidate B1 located above the prediction unit,

spatial motion vector prediction candidate B0 located on a right side of the prediction unit,

spatial motion vector prediction candidate A0 located below the spatial motion vector prediction candidate A1, and

spatial motion vector prediction candidate B2 located on a same column as the spatial motion vector prediction candidate A1 and on a same row as the spatial motion vector prediction candidate B1.

38. (New) The method according to claim 9 wherein comparing motion information comprises performing an identicality or an equivalence check between the motion information of

Nokia Exhibit 2004, p. 214
Amazon.com v. Nokia
IPR2024-00605

the first spatial motion vector prediction candidate and the motion information of spatial motion vector prediction candidates in the subset of the set of spatial motion vector prediction candidates.

39. (New) The method according to claim 9 wherein the motion information comprises a motion vector value and a reference picture index.

40. (New) The apparatus according to Claim 23 wherein the apparatus is further caused to process the spatial motion vector prediction candidates from the set of spatial motion vector prediction candidates in order as follows:

spatial motion vector prediction candidate A1 located on a left side of a prediction unit of the block of pixels,

spatial motion vector prediction candidate B1 located above the prediction unit,

spatial motion vector prediction candidate B0 located on a right side of the prediction unit,

spatial motion vector prediction candidate A0 located below the spatial motion vector prediction candidate A1, and

spatial motion vector prediction candidate B2 located on a same column as the spatial motion vector prediction candidate A1 and on a same row as the spatial motion vector prediction candidate B1.

41. (New) The apparatus according to claim 23 wherein the apparatus is further caused to compare motion information by performing an identicality or an equivalence check between the motion information of the first spatial motion vector prediction candidate and the motion information of spatial motion vector prediction candidates in the subset of the set of spatial motion vector prediction candidates.

42. (New) The apparatus according to claim 23 wherein the motion information comprises a motion vector value and a reference picture index.

Nokia Exhibit 2004, p. 215
Amazon.com v. Nokia
IPR2024-00605

REMARKS

The Official Action objected to Claims 1, 15, 23 and 29 based upon a typographical error. Claims 1, 15, 23 and 29 have now been amended to remedy the typographical error such that the objection is overcome.

Claims 1-28 were rejected under 35 U.S.C. 112(b) or 35 U.S.C. 112 (pre-AIA), second paragraph, as being indefinite for failing to particularly point out and distinctly claim the subject matter which the inventor or a joint inventor (or for applications subject to pre-AIA 35 U.S.C. 112, the applicant), regards as the invention. The claims have now been amended to address each of the issues noted by the Official Action with the result set of amended claims now being definite such that the rejection of Claims 1-28 under 35 U.S.C. 112(b) or 35 U.S.C. 112 (pre-AIA), second paragraph, is also overcome.

The Official Action confirmed that Claims 4, 6, 11, 13, 18, 20, 25 and 27 would be allowable if rewritten to overcome the rejection under 35 U.S.C. 112(b) or 35 U.S.C. 112 (pre-AIA), 2nd paragraph, and to include all of the recitations of the base claim and any intervening claims. However, the Official Action did reject Claims 1-3, 5, 7-10, 12, 14-17, 19, 21-24, 26 and 28-30 under pre-AIA 35 U.S.C. 102(a) as being anticipated by US Patent Application Publication No. US 2011/0194609 to Rusert, et al. ("Rusert"). As described below, the independent claims have been amended in order to be further patentably distinct from Rusert. At least partially as a result of the amendments to the independent claims, a number of the dependent claims have been correspondingly amended and dependent Claims 3, 8, 10, 17, 22 and 24 have been canceled without prejudice or disclaimer. Additionally, new dependent Claims 31-42 have been added to highlight other unique features of the present application. Based on the foregoing amendments and the following remarks, reconsideration of the present application and allowance of the amended sets of claims are respectfully requested.

Nokia Exhibit 2004, p. 216
Amazon.com v. Nokia
IPR2024-00605

By way of example of the independent claims, independent Claim 1 is directed to a method that includes determining a first spatial motion vector prediction candidate from a set of spatial motion vector prediction candidates for a block of pixels. The method also includes comparing motion information of the first spatial motion vector prediction candidate with motion information of spatial motion vector prediction candidates in a subset of the set of spatial motion vector prediction candidates. The subset is less than the set. And, the subset is determined based on a location of the block associated with the first spatial motion vector prediction candidate. The method additionally includes determining to include the first spatial motion vector prediction candidate in a motion vector prediction list for the block of pixels based on the comparing. The method further includes selecting one motion vector prediction candidate from the motion vector prediction list to represent a motion vector prediction for the block of pixels and performing a motion compensated prediction based on the selected motion vector prediction candidate to construct the block of pixels.

The cited reference, Rusert, describes a technique for selecting predicted motion vector candidates to be used for coding a current block. In Rusert, a set of predicted motion vector candidates is defined with each predicted motion vector candidate of the set corresponding to a motion vector used for coding a previous block. A subset of the predicted motion vector candidates is then defined based upon an allowed distance from the current block. In this regard the subset of predicted motion vector candidates includes those predicted motion vector candidates corresponding to a motion vector used for coding a previous block that is within the allowed distance from the current block. Duplicate predicted motion vector candidates may also be eliminated from the subset. The resulting subset of predicted motion vector candidates may then be used to code the current block.

In independent Claim 1, the subset of the set of spatial motion vector prediction candidates is determined based on a location of the block associated with the first spatial motion vector prediction candidate, which is itself a member of the set of spatial motion vector prediction candidates for a block of pixels. In contrast, the allowed distance that defines the subset of predicted motion vector candidates is described by Rusert to be between the current

Nokia Exhibit 2004, p. 217
Amazon.com v. Nokia
IPR2024-00605

block and a previous block with which a predicted motion vector candidate is associated. Rusert therefore does not teach or suggest that the determination of the subset is based on the location of the previous block with which a predicted motion vector candidate is associated. The location of a previous block with which a predicted motion vector candidate is associated may be compared to determine whether the predicted motion vector candidate should be included in the subset or not. However, the subset is not determined by Rusert as recited by independent Claim 1 based on the location of the previous block with which a predicated motion vector candidate is associated and, instead, the subset is determined by Rusert to be the predicted motion vector candidates associated with previous blocks that are within the allowed distance of the current block. Thus, the subset of Rusert is determined based on the location of the current block, but not the location of one of the previous blocks that is associated with a predicted motion vector candidate from the set of predicted motion vector candidates. Indeed, the current block of Rusert is not associated with a predicted motion vector candidate at the time the subset is determined as the process of constructing and then evaluating the subset is for the purpose of subsequently coding the current block.

As described, Rusert therefore fails to teach or suggest that the subset of the set of spatial motion vector prediction candidates is determined based on a location of the block associated with the first spatial motion vector prediction candidate, which is itself a member of the set of spatial motion vector prediction candidates for a block of pixels. As such, independent Claim 1, as amended, is not taught or suggested by Rusert and the rejection of Claim 1 is overcome.

The other independent claims, namely, Claims 9, 15, 23, 29 and 30, have different scopes of protection, but do recite that the subset of the set of spatial motion vector prediction candidates is determined based on a location of the block associated with the first spatial motion vector prediction candidate, which is itself a member of the set of spatial motion vector prediction candidates for a block of pixels. As such, Rusert also fails to teach or suggest independent Claims 9, 15, 23, 29 and 30, as amended, for at least the same reason as set forth above with respect to independent Claim 1.

Nokia Exhibit 2004, p. 218
Amazon.com v. Nokia
IPR2024-00605

Patentability of the Dependent Claims

Because each of the dependent claims includes each of the recitations of a respective independent base claim, Applicant further submits that the dependent claims are patentably distinct from Rusert for at least those reasons as discussed above. Accordingly, Applicant respectfully submits that the rejections of the dependent claims are overcome and the dependent claims are in condition for allowance. As the patentability of the independent claims has been argued as set forth above, Applicant will not take this opportunity to argue the merits of the rejection with regard to specific dependent claims. However, Applicant does not concede that the dependent claims are not independently patentable and reserves the right to argue the patentability of dependent claims at a later date if necessary.

Nokia Exhibit 2004, p. 219
Amazon.com v. Nokia
IPR2024-00605

CONCLUSION

In view of the remarks and amendments presented above, it is respectfully submitted that the claims of the present application are in condition for allowance. It is respectfully requested that a Notice of Allowance be issued in due course. The Examiner is requested to contact Applicants' undersigned agent to resolve any remaining issues in order to expedite examination of the present application.

It is not believed that extensions of time or fees for net addition of claims are required, beyond those that may otherwise be provided for in documents accompanying this paper. However, in the event that additional extensions of time are necessary to allow consideration of this paper, such extensions are hereby petitioned under 37 CFR § 1.136(a), and any fee required therefor (including fees for net addition of claims) is hereby authorized to be charged to Deposit Account No. 16-0605.

Respectfully submitted,

/Guy R. Gosnell/

Guy R. Gosnell
Registration No. 34,610

Customer No. 10949
ALSTON & BIRD LLP
Bank of America Plaza
101 South Tryon Street, Suite 4000
Charlotte, NC 28280-4000
Tel Charlotte Office (704) 444-1000
Fax Charlotte Office (704) 444-1111

ELECTRONICALLY FILED USING THE EFS-WEB ELECTRONIC FILING SYSTEM OF THE UNITED STATES PATENT & TRADEMARK OFFICE ON February 16, 2022.

Nokia Exhibit 2004, p. 220
Amazon.com v. Nokia
IPR2024-00605

PTO/AIA/22 (10-20)
Approved for use through 11/30/2020. OMB 0651-0031
U.S. Patent and Trademark Office; U.S. DEPARTMENT OF COMMERCE
Under the Paperwork Reduction Act of 1995, no persons are required to respond to a collection of information unless it displays a valid OMB control number.

PETITION FOR EXTENSION OF TIME UNDER 37 CFR 1.136(a)

Docket Number (Optional): 042933/542643

Application Number: 16/741,156

Filed: January 13, 2020

For: METHOD FOR CODING AND AN APPARATUS

Art Unit: 2488

Examiner: Aynalem, Nathnael B

This is a request under the provisions of 37 CFR 1.136(a) to extend the period for filing a reply in the above-identified application.

The requested extension and fee are as follows (check time period desired and enter the appropriate fee below):

		Fee	Small Entity Fee	Micro Entity Fee	
☐	One month (37 CFR 1.17(a)(1))	$220	$110	$55	$
☐	Two months (37 CFR 1.17(a)(2))	$640	$320	$160	$
☑	Three months (37 CFR 1.17(a)(3))	$1,480	$740	$370	$ 1480.00
☐	Four months (37 CFR 1.17(a)(4))	$2,320	$1,160	$580	$
☐	Five months (37 CFR 1.17(a)(5))	$3,160	$1,580	$790	$

☐ Applicant asserts small entity status. See 37 CFR 1.27.

☐ Applicant certifies micro entity status. See 37 CFR 1.29.
Form PTO/SB/15A or B or equivalent must either be enclosed or have been submitted previously.

☐ A check in the amount of the fee is enclosed.

☐ Payment by credit card. Form PTO-2038 is attached.

☐ The Director has already been authorized to charge fees in this application to a Deposit Account.

☑ The Director is hereby authorized to charge any fees which may be required, or credit any overpayment, to Deposit Account Number 16-0605.

☑ Payment made via EFS-Web.

WARNING: Information on this form may become public. Credit card information should not be included on this form. Provide credit card information and authorization on PTO-2038.

I am the

☐ applicant.

☑ attorney or agent of record. Registration number 34610.

☐ attorney or agent acting under 37 CFR 1.34. Registration number _____.

/Guy R. Gosnell/
Signature

February 16, 2022
Date

Guy R. Gosnell
Typed or printed name

(704) 444-1000
Telephone Number

NOTE: This form must be signed in accordance with 37 CFR 1.33. See 37 CFR 1.4 for signature requirements and certifications. Submit multiple forms if more than one signature is required, see below*.

☑ * Total of 1 forms are submitted.

This collection of information is required by 37 CFR 1.136(a). The information is required to obtain or retain a benefit by the public, which is to file (and by the USPTO to process) an application. Confidentiality is governed by 35 U.S.C. 122 and 37 CFR 1.11 and 1.14. This collection is estimated to take 6 minutes to complete, including gathering, preparing, and submitting the completed application form to the USPTO. Time will vary depending upon the individual case. Any comments on the amount of time you require to complete this form and/or suggestions for reducing this burden should be sent to the Chief Information Officer, U.S. Patent and Trademark Office, U.S. Department of Commerce, P.O. Box 1450, Alexandria, VA 22313-1450. DO NOT SEND FEES OR COMPLETED FORMS TO THIS ADDRESS. SEND TO: Mail Stop PCT, Commissioner for Patents, P.O. Box 1450, Alexandria, VA 22313-1450.

Privacy Act Statement

The **Privacy Act of 1974 (P.L. 93-579)** requires that you be given certain information in connection with your submission of the attached form related to a patent application or patent. Accordingly, pursuant to the requirements of the Act, please be advised that: (1) the general authority for the collection of this information is 35 U.S.C. 2(b)(2); (2) furnishing of the information solicited is voluntary; and (3) the principal purpose for which the information is used by the U.S. Patent and Trademark Office is to process and/or examine your submission related to a patent application or patent. If you do not furnish the requested information, the U.S. Patent and Trademark Office may not be able to process and/or examine your submission, which may result in termination of proceedings or abandonment of the application or expiration of the patent.

The information provided by you in this form will be subject to the following routine uses:

1. The information on this form will be treated confidentially to the extent allowed under the Freedom of Information Act (5 U.S.C. 552) and the Privacy Act (5 U.S.C 552a). Records from this system of records may be disclosed to the Department of Justice to determine whether disclosure of these records is required by the Freedom of Information Act.
2. A record from this system of records may be disclosed, as a routine use, in the course of presenting evidence to a court, magistrate, or administrative tribunal, including disclosures to opposing counsel in the course of settlement negotiations.
3. A record in this system of records may be disclosed, as a routine use, to a Member of Congress submitting a request involving an individual, to whom the record pertains, when the individual has requested assistance from the Member with respect to the subject matter of the record.
4. A record in this system of records may be disclosed, as a routine use, to a contractor of the Agency having need for the information in order to perform a contract. Recipients of information shall be required to comply with the requirements of the Privacy Act of 1974, as amended, pursuant to 5 U.S.C. 552a(m).
5. A record related to an International Application filed under the Patent Cooperation Treaty in this system of records may be disclosed, as a routine use, to the International Bureau of the World Intellectual Property Organization, pursuant to the Patent Cooperation Treaty.
6. A record in this system of records may be disclosed, as a routine use, to another federal agency for purposes of National Security review (35 U.S.C. 181) and for review pursuant to the Atomic Energy Act (42 U.S.C. 218(c)).
7. A record from this system of records may be disclosed, as a routine use, to the Administrator, General Services, or his/her designee, during an inspection of records conducted by GSA as part of that agency's responsibility to recommend improvements in records management practices and programs, under authority of 44 U.S.C. 2904 and 2906. Such disclosure shall be made in accordance with the GSA regulations governing inspection of records for this purpose, and any other relevant (*i.e.*, GSA or Commerce) directive. Such disclosure shall not be used to make determinations about individuals.
8. A record from this system of records may be disclosed, as a routine use, to the public after either publication of the application pursuant to 35 U.S.C. 122(b) or issuance of a patent pursuant to 35 U.S.C. 151. Further, a record may be disclosed, subject to the limitations of 37 CFR 1.14, as a routine use, to the public if the record was filed in an application which became abandoned or in which the proceedings were terminated and which application is referenced by either a published application, an application open to public inspection or an issued patent.
9. A record from this system of records may be disclosed, as a routine use, to a Federal, State, or local law enforcement agency, if the USPTO becomes aware of a violation or potential violation of law or regulation.

Electronic Patent Application Fee Transmittal

Application Number:	16741156
Filing Date:	13-Jan-2020
Title of Invention:	METHOD FOR CODING AND AN APPARATUS
First Named Inventor/Applicant Name:	Mehmet Oguz BICI
Filer:	Guy Randall Gosnell/Torrey Wyatt
Attorney Docket Number:	042933/542643

Filed as Large Entity

Filing Fees for Utility under 35 USC 111(a)

Description	Fee Code	Quantity	Amount	Sub-Total in USD($)
Basic Filing:				
Pages:				
Claims:				
CLAIMS IN EXCESS OF 20	1202	6	100	600
Miscellaneous-Filing:				
Petition:				
Patent-Appeals-and-Interference:				
Post-Allowance-and-Post-Issuance:				

Description	Fee Code	Quantity	Amount	Sub-Total in USD($)
Extension-of-Time:				
Extension - 3 months with $0 paid	1253	1	1480	1480
Miscellaneous:				
			Total in USD ($)	**2080**

Electronic Acknowledgement Receipt

EFS ID:	45014724
Application Number:	16741156
International Application Number:	
Confirmation Number:	3751
Title of Invention:	METHOD FOR CODING AND AN APPARATUS
First Named Inventor/Applicant Name:	Mehmet Oguz BICI
Customer Number:	10949
Filer:	Guy Randall Gosnell/Torrey Wyatt
Filer Authorized By:	Guy Randall Gosnell
Attorney Docket Number:	042933/542643
Receipt Date:	16-FEB-2022
Filing Date:	13-JAN-2020
Time Stamp:	16:17:43
Application Type:	Utility under 35 USC 111(a)

Payment information:

Submitted with Payment	yes
Payment Type	DA
Payment was successfully received in RAM	$2080
RAM confirmation Number	E20222FG18132215
Deposit Account	
Authorized User	

The Director of the USPTO is hereby authorized to charge indicated fees and credit any overpayment as follows:

File Listing:

Document Number	Document Description	File Name	File Size(Bytes)/ Message Digest	Multi Part /.zip	Pages (if appl.)
1		542643_Response_to_Non-Final_OA.pdf	174545 687d09609e0c1663ccb2f0be44e1d6c38536d335	yes	24
	Multipart Description/PDF files in .zip description				
	Document Description		**Start**	**End**	
	Amendment/Request for Reconsideration-After Non-Final Rejection		1	1	
	Claims		2	19	
	Applicant Arguments/Remarks Made in an Amendment		20	24	
Warnings:					
Information:					
2	Extension of Time	542643_EOT.pdf	165700 b229ff78d035b74858d3fdb2d2f446171c1aa6c0	no	2
Warnings:					
Information:					
3	Fee Worksheet (SB06)	fee-info.pdf	40897 056d87c6909fba1a44be073930945184826 81f83	no	2
Warnings:					
Information:					
		Total Files Size (in bytes):	381142		

This Acknowledgement Receipt evidences receipt on the noted date by the USPTO of the indicated documents, characterized by the applicant, and including page counts, where applicable. It serves as evidence of receipt similar to a Post Card, as described in MPEP 503.

New Applications Under 35 U.S.C. 111
If a new application is being filed and the application includes the necessary components for a filing date (see 37 CFR 1.53(b)-(d) and MPEP 506), a Filing Receipt (37 CFR 1.54) will be issued in due course and the date shown on this Acknowledgement Receipt will establish the filing date of the application.
National Stage of an International Application under 35 U.S.C. 371
If a timely submission to enter the national stage of an international application is compliant with the conditions of 35 U.S.C. 371 and other applicable requirements a Form PCT/DO/EO/903 indicating acceptance of the application as a national stage submission under 35 U.S.C. 371 will be issued in addition to the Filing Receipt, in due course.
New International Application Filed with the USPTO as a Receiving Office
If a new international application is being filed and the international application includes the necessary components for an international filing date (see PCT Article 11 and MPEP 1810), a Notification of the International Application Number and of the International Filing Date (Form PCT/RO/105) will be issued in due course, subject to prescriptions concerning national security, and the date shown on this Acknowledgement Receipt will establish the international filing date of the application.

UNITED STATES PATENT AND TRADEMARK OFFICE

UNITED STATES DEPARTMENT OF COMMERCE
United States Patent and Trademark Office
Address: COMMISSIONER FOR PATENTS
P.O. Box 1450
Alexandria, Virginia 22313-1450
www.uspto.gov

NOTICE OF ALLOWANCE AND FEE(S) DUE

10949 7590 06/16/2022
Nokia Corporation and Alston & Bird LLP
c/o Alston & Bird LLP
One South at The Plaza, 101 South Tryon Street
Suite 4000
Charlotte, NC 28280-4000

EXAMINER
AYNALEM, NATHNAEL B

ART UNIT	PAPER NUMBER
2488	

DATE MAILED: 06/16/2022

APPLICATION NO.	FILING DATE	FIRST NAMED INVENTOR	ATTORNEY DOCKET NO.	CONFIRMATION NO.
16/741,156	01/13/2020	Mehmet Oguz BICI	042933/542643	3751

TITLE OF INVENTION: METHOD FOR CODING AND AN APPARATUS

APPLN. TYPE	ENTITY STATUS	ISSUE FEE DUE	PUBLICATION FEE DUE	PREV. PAID ISSUE FEE	TOTAL FEE(S) DUE	DATE DUE
nonprovisional	UNDISCOUNTED	$1200	$0.00	$0.00	$1200	09/16/2022

THE APPLICATION IDENTIFIED ABOVE HAS BEEN EXAMINED AND IS ALLOWED FOR ISSUANCE AS A PATENT. PROSECUTION ON THE MERITS IS CLOSED. THIS NOTICE OF ALLOWANCE IS NOT A GRANT OF PATENT RIGHTS. THIS APPLICATION IS SUBJECT TO WITHDRAWAL FROM ISSUE AT THE INITIATIVE OF THE OFFICE OR UPON PETITION BY THE APPLICANT. SEE 37 CFR 1.313 AND MPEP 1308.

THE ISSUE FEE AND PUBLICATION FEE (IF REQUIRED) MUST BE PAID WITHIN THREE MONTHS FROM THE MAILING DATE OF THIS NOTICE OR THIS APPLICATION SHALL BE REGARDED AS ABANDONED. THIS STATUTORY PERIOD CANNOT BE EXTENDED. SEE 35 U.S.C. 151. THE ISSUE FEE DUE INDICATED ABOVE DOES NOT REFLECT A CREDIT FOR ANY PREVIOUSLY PAID ISSUE FEE IN THIS APPLICATION. IF AN ISSUE FEE HAS PREVIOUSLY BEEN PAID IN THIS APPLICATION (AS SHOWN ABOVE), THE RETURN OF PART B OF THIS FORM WILL BE CONSIDERED A REQUEST TO REAPPLY THE PREVIOUSLY PAID ISSUE FEE TOWARD THE ISSUE FEE NOW DUE.

HOW TO REPLY TO THIS NOTICE:

I. Review the ENTITY STATUS shown above. If the ENTITY STATUS is shown as SMALL or MICRO, verify whether entitlement to that entity status still applies.

If the ENTITY STATUS is the same as shown above, pay the TOTAL FEE(S) DUE shown above.

If the ENTITY STATUS is changed from that shown above, on PART B - FEE(S) TRANSMITTAL, complete section number 5 titled "Change in Entity Status (from status indicated above)".

For purposes of this notice, small entity fees are 1/2 the amount of undiscounted fees, and micro entity fees are 1/2 the amount of small entity fees.

II. PART B - FEE(S) TRANSMITTAL, or its equivalent, must be completed and returned to the United States Patent and Trademark Office (USPTO) with your ISSUE FEE and PUBLICATION FEE (if required). If you are charging the fee(s) to your deposit account, section "4b" of Part B - Fee(s) Transmittal should be completed. If an equivalent of Part B is filed, a request to reapply a previously paid issue fee must be clearly made, and delays in processing may occur due to the difficulty in recognizing the paper as an equivalent of Part B.

III. All communications regarding this application must give the application number. Please direct all communications prior to issuance to Mail Stop ISSUE FEE unless advised to the contrary.

IMPORTANT REMINDER: Maintenance fees are due in utility patents issuing on applications filed on or after Dec. 12, 1980. It is patentee's responsibility to ensure timely payment of maintenance fees when due. More information is available at www.uspto.gov/PatentMaintenanceFees.

Nokia Exhibit 2004, p. 228
Amazon.com v. Nokia
IPR2024-00605

PART B - FEE(S) TRANSMITTAL

Complete and send this form, together with applicable fee(s), by mail or fax, or via EFS-Web.

By mail, send to: Mail Stop ISSUE FEE
Commissioner for Patents
P.O. Box 1450
Alexandria, Virginia 22313-1450

By fax, send to: (571)-273-2885

INSTRUCTIONS: This form should be used for transmitting the ISSUE FEE and PUBLICATION FEE (if required). Blocks 1 through 5 should be completed where appropriate. All further correspondence including the Patent, advance orders and notification of maintenance fees will be mailed to the current correspondence address as indicated unless corrected below or directed otherwise in Block 1, by (a) specifying a new correspondence address; and/or (b) indicating a separate "FEE ADDRESS" for maintenance fee notifications.

CURRENT CORRESPONDENCE ADDRESS (Note: Use Block 1 for any change of address)

10949 7590 06/16/2022
Nokia Corporation and Alston & Bird LLP
c/o Alston & Bird LLP
One South at The Plaza, 101 South Tryon Street
Suite 4000
Charlotte, NC 28280-4000

Note: A certificate of mailing can only be used for domestic mailings of the Fee(s) Transmittal. This certificate cannot be used for any other accompanying papers. Each additional paper, such as an assignment or formal drawing, must have its own certificate of mailing or transmission.

Certificate of Mailing or Transmission

I hereby certify that this Fee(s) Transmittal is being deposited with the United States Postal Service with sufficient postage for first class mail in an envelope addressed to the Mail Stop ISSUE FEE address above, or being transmitted to the USPTO via EFS-Web or by facsimile to (571) 273-2885, on the date below.

(Typed or printed name)

(Signature)

(Date)

APPLICATION NO.	FILING DATE	FIRST NAMED INVENTOR	ATTORNEY DOCKET NO.	CONFIRMATION NO.
16/741,156	01/13/2020	Mehmet Oguz BICI	042933/542643	3751

TITLE OF INVENTION: METHOD FOR CODING AND AN APPARATUS

APPLN. TYPE	ENTITY STATUS	ISSUE FEE DUE	PUBLICATION FEE DUE	PREV. PAID ISSUE FEE	TOTAL FEE(S) DUE	DATE DUE
nonprovisional	UNDISCOUNTED	$1200	$0.00	$0.00	$1200	09/16/2022

EXAMINER	ART UNIT	CLASS-SUBCLASS
AYNALEM, NATHNAEL B	2488	375-240160

1. Change of correspondence address or indication of "Fee Address" (37 CFR 1.363).

❑ Change of correspondence address (or Change of Correspondence Address form PTO/AIA/122 or PTO/SB/122) attached.

❑ "Fee Address" indication (or "Fee Address" Indication form PTO/AIA/47 or PTO/SB/47; Rev 03-02 or more recent) attached. **Use of a Customer Number is required.**

2. For printing on the patent front page, list
(1) The names of up to 3 registered patent attorneys or agents OR, alternatively,
(2) The name of a single firm (having as a member a registered attorney or agent) and the names of up to 2 registered patent attorneys or agents. If no name is listed, no name will be printed.

1_____
2_____
3_____

3. ASSIGNEE NAME AND RESIDENCE DATA TO BE PRINTED ON THE PATENT (print or type)

PLEASE NOTE: Unless an assignee is identified below, no assignee data will appear on the patent. If an assignee is identified below, the document must have been previously recorded, or filed for recordation, as set forth in 37 CFR 3.11 and 37 CFR 3.81(a). Completion of this form is NOT a substitute for filing an assignment.

(A) NAME OF ASSIGNEE (B) RESIDENCE: (CITY and STATE OR COUNTRY)

Please check the appropriate assignee category or categories (will not be printed on the patent) : ❑ Individual ❑ Corporation or other private group entity ❑ Government

4a. Fees submitted: ❑Issue Fee ❑Publication Fee (if required) ❑Advance Order - # of Copies _____

4b. Method of Payment: *(Please first reapply any previously paid fee shown above)*

❑ Electronic Payment via EFS-Web ❑ Enclosed check ❑ Non-electronic payment by credit card (Attach form PTO-2038)

❑ The Director is hereby authorized to charge the required fee(s), any deficiency, or credit any overpayment to Deposit Account No. _____

5. **Change in Entity Status** (from status indicated above)

❑ Applicant certifying micro entity status. See 37 CFR 1.29

❑ Applicant asserting small entity status. See 37 CFR 1.27

❑ Applicant changing to regular undiscounted fee status.

NOTE: Absent a valid certification of Micro Entity Status (see forms PTO/SB/15A and 15B), issue fee payment in the micro entity amount will not be accepted at the risk of application abandonment.
NOTE: If the application was previously under micro entity status, checking this box will be taken to be a notification of loss of entitlement to micro entity status.
NOTE: Checking this box will be taken to be a notification of loss of entitlement to small or micro entity status, as applicable.

NOTE: This form must be signed in accordance with 37 CFR 1.31 and 1.33. See 37 CFR 1.4 for signature requirements and certifications.

Authorized Signature _____ Date _____

Typed or printed name _____ Registration No. _____

Nokia Exhibit 2004, p. 229
Amazon.com v. Nokia
IPR2024-00605

UNITED STATES DEPARTMENT OF COMMERCE
United States Patent and Trademark Office
Address: COMMISSIONER FOR PATENTS
P.O. Box 1450
Alexandria, Virginia 22313-1450
www.uspto.gov

APPLICATION NO.	FILING DATE	FIRST NAMED INVENTOR	ATTORNEY DOCKET NO.	CONFIRMATION NO.
16/741,156	01/13/2020	Mehmet Oguz BICI	042933/542643	3751

10949 7590 06/16/2022
Nokia Corporation and Alston & Bird LLP
c/o Alston & Bird LLP
One South at The Plaza, 101 South Tryon Street
Suite 4000
Charlotte, NC 28280-4000

EXAMINER
AYNALEM, NATHNAEL B

ART UNIT	PAPER NUMBER
2488	

DATE MAILED: 06/16/2022

Determination of Patent Term Adjustment under 35 U.S.C. 154 (b)
(Applications filed on or after May 29, 2000)

The Office has discontinued providing a Patent Term Adjustment (PTA) calculation with the Notice of Allowance.

Section 1(h)(2) of the AIA Technical Corrections Act amended 35 U.S.C. 154(b)(3)(B)(i) to eliminate the requirement that the Office provide a patent term adjustment determination with the notice of allowance. See Revisions to Patent Term Adjustment, 78 Fed. Reg. 19416, 19417 (Apr. 1, 2013). Therefore, the Office is no longer providing an initial patent term adjustment determination with the notice of allowance. The Office will continue to provide a patent term adjustment determination with the Issue Notification Letter that is mailed to applicant approximately three weeks prior to the issue date of the patent, and will include the patent term adjustment on the patent. Any request for reconsideration of the patent term adjustment determination (or reinstatement of patent term adjustment) should follow the process outlined in 37 CFR 1.705.

Any questions regarding the Patent Term Extension or Adjustment determination should be directed to the Office of Patent Legal Administration at (571)-272-7702. Questions relating to issue and publication fee payments should be directed to the Customer Service Center of the Office of Patent Publication at 1-(888)-786-0101 or (571)-272-4200.

Nokia Exhibit 2004, p. 230
Amazon.com v. Nokia
IPR2024-00605

OMB Clearance and PRA Burden Statement for PTOL-85 Part B

The Paperwork Reduction Act (PRA) of 1995 requires Federal agencies to obtain Office of Management and Budget approval before requesting most types of information from the public. When OMB approves an agency request to collect information from the public, OMB (i) provides a valid OMB Control Number and expiration date for the agency to display on the instrument that will be used to collect the information and (ii) requires the agency to inform the public about the OMB Control Number's legal significance in accordance with 5 CFR 1320.5(b).

The information collected by PTOL-85 Part B is required by 37 CFR 1.311. The information is required to obtain or retain a benefit by the public which is to file (and by the USPTO to process) an application. Confidentiality is governed by 35 U.S.C. 122 and 37 CFR 1.14. This collection is estimated to take 30 minutes to complete, including gathering, preparing, and submitting the completed application form to the USPTO. Time will vary depending upon the individual case. Any comments on the amount of time you require to complete this form and/or suggestions for reducing this burden, should be sent to the Chief Information Officer, U.S. Patent and Trademark Office, U.S. Department of Commerce, P.O. Box 1450, Alexandria, Virginia 22313-1450. DO NOT SEND FEES OR COMPLETED FORMS TO THIS ADDRESS. SEND TO: Commissioner for Patents, P.O. Box 1450, Alexandria, Virginia 22313-1450. Under the Paperwork Reduction Act of 1995, no persons are required to respond to a collection of information unless it displays a valid OMB control number.

Privacy Act Statement

The Privacy Act of 1974 (P.L. 93-579) requires that you be given certain information in connection with your submission of the attached form related to a patent application or patent. Accordingly, pursuant to the requirements of the Act, please be advised that: (1) the general authority for the collection of this information is 35 U.S.C. 2(b)(2); (2) furnishing of the information solicited is voluntary; and (3) the principal purpose for which the information is used by the U.S. Patent and Trademark Office is to process and/or examine your submission related to a patent application or patent. If you do not furnish the requested information, the U.S. Patent and Trademark Office may not be able to process and/or examine your submission, which may result in termination of proceedings or abandonment of the application or expiration of the patent.

The information provided by you in this form will be subject to the following routine uses:

1. The information on this form will be treated confidentially to the extent allowed under the Freedom of Information Act (5 U.S.C. 552) and the Privacy Act (5 U.S.C 552a). Records from this system of records may be disclosed to the Department of Justice to determine whether disclosure of these records is required by the Freedom of Information Act.
2. A record from this system of records may be disclosed, as a routine use, in the course of presenting evidence to a court, magistrate, or administrative tribunal, including disclosures to opposing counsel in the course of settlement negotiations.
3. A record in this system of records may be disclosed, as a routine use, to a Member of Congress submitting a request involving an individual, to whom the record pertains, when the individual has requested assistance from the Member with respect to the subject matter of the record.
4. A record in this system of records may be disclosed, as a routine use, to a contractor of the Agency having need for the information in order to perform a contract. Recipients of information shall be required to comply with the requirements of the Privacy Act of 1974, as amended, pursuant to 5 U.S.C. 552a(m).
5. A record related to an International Application filed under the Patent Cooperation Treaty in this system of records may be disclosed, as a routine use, to the International Bureau of the World Intellectual Property Organization, pursuant to the Patent Cooperation Treaty.
6. A record in this system of records may be disclosed, as a routine use, to another federal agency for purposes of National Security review (35 U.S.C. 181) and for review pursuant to the Atomic Energy Act (42 U.S.C. 218(c)).
7. A record from this system of records may be disclosed, as a routine use, to the Administrator, General Services, or his/her designee, during an inspection of records conducted by GSA as part of that agency's responsibility to recommend improvements in records management practices and programs, under authority of 44 U.S.C. 2904 and 2906. Such disclosure shall be made in accordance with the GSA regulations governing inspection of records for this purpose, and any other relevant (i.e., GSA or Commerce) directive. Such disclosure shall not be used to make determinations about individuals.
8. A record from this system of records may be disclosed, as a routine use, to the public after either publication of the application pursuant to 35 U.S.C. 122(b) or issuance of a patent pursuant to 35 U.S.C. 151. Further, a record may be disclosed, subject to the limitations of 37 CFR 1.14, as a routine use, to the public if the record was filed in an application which became abandoned or in which the proceedings were terminated and which application is referenced by either a published application, an application open to public inspection or an issued patent.
9. A record from this system of records may be disclosed, as a routine use, to a Federal, State, or local law enforcement agency, if the USPTO becomes aware of a violation or potential violation of law or regulation.

Notice of Allowability	Application No. 16/741,156	Applicant(s) BICI et al.	
	Examiner NATHNAEL AYNALEM	Art Unit 2488	AIA (FITF) Status No

-- The MAILING DATE of this communication appears on the cover sheet with the correspondence address--

All claims being allowable, PROSECUTION ON THE MERITS IS (OR REMAINS) CLOSED in this application. If not included herewith (or previously mailed), a Notice of Allowance (PTOL-85) or other appropriate communication will be mailed in due course. **THIS NOTICE OF ALLOWABILITY IS NOT A GRANT OF PATENT RIGHTS.** This application is subject to withdrawal from issue at the initiative of the Office or upon petition by the applicant. See 37 CFR 1.313 and MPEP 1308.

1. ☑ This communication is responsive to amendment filed on 02/16/2022.
   ☐ A declaration(s)/affidavit(s) under **37 CFR 1.130(b)** was/were filed on _____.

2. ☐ An election was made by the applicant in response to a restriction requirement set forth during the interview on _____; the restriction requirement and election have been incorporated into this action.

3. ☑ The allowed claim(s) is/are 1-2,4-7,9,11-16,18-21,23 and 25-42 . As a result of the allowed claim(s), you may be eligible to benefit from the **Patent Prosecution Highway** program at a participating intellectual property office for the corresponding application. For more information, please see **http://www.uspto.gov/patents/init_events/pph/index.jsp** or send an inquiry to **PPHfeedback@uspto.gov.**

4. ☐ Acknowledgment is made of a claim for foreign priority under 35 U.S.C. § 119(a)-(d) or (f).

   Certified copies:

   a) ☐ All b) ☐ Some* c) ☐ None of the:

   1. ☐ Certified copies of the priority documents have been received.
   2. ☐ Certified copies of the priority documents have been received in Application No. _____ .
   3. ☐ Copies of the certified copies of the priority documents have been received in this national stage application from the International Bureau (PCT Rule 17.2(a)).

   * Certified copies not received: _____ .

Applicant has THREE MONTHS FROM THE "MAILING DATE" of this communication to file a reply complying with the requirements noted below. Failure to timely comply will result in ABANDONMENT of this application.
THIS THREE-MONTH PERIOD IS NOT EXTENDABLE.

5. ☐ CORRECTED DRAWINGS (as "replacement sheets") must be submitted.
   ☐ including changes required by the attached Examiner's Amendment / Comment or in the Office action of Paper No./Mail Date _____ .

   Identifying indicia such as the application number (see 37 CFR 1.84(c)) should be written on the drawings in the front (not the back) of each sheet. Replacement sheet(s) should be labeled as such in the header according to 37 CFR 1.121(d).

6. ☐ DEPOSIT OF and/or INFORMATION about the deposit of BIOLOGICAL MATERIAL must be submitted. Note the attached Examiner's comment regarding REQUIREMENT FOR THE DEPOSIT OF BIOLOGICAL MATERIAL.

Attachment(s)

1. ☐ Notice of References Cited (PTO-892)
2. ☐ Information Disclosure Statements (PTO/SB/08), Paper No./Mail Date _____.
3. ☐ Examiner's Comment Regarding Requirement for Deposit of Biological Material _____.
4. ☐ Interview Summary (PTO-413), Paper No./Mail Date. _____.
5. ☐ Examiner's Amendment/Comment
6. ☑ Examiner's Statement of Reasons for Allowance
7. ☐ Other _____.

/NATHNAEL AYNALEM/
Primary Examiner, Art Unit 2488

Nokia Exhibit 2004, p. 232
Amazon.com v. Nokia
IPR2024-00605

Allowability Notice

Notice of Pre-AIA or AIA Status

The present application is being examined under the pre-AIA first to invent provisions.

Response to Amendment/Arguments

Applicant's amendment/arguments with respect to pending claims 1, 2, 4-7, 9, 11-16, 18-21, 23 and 25-42 filed on February 16, 2022 have been fully considered. In view of the amendment of the independent claims 1, 9, 15 and 23, and in view of applicant's arguments, the rejection of all the pending claims is withdrawn. Thus, the current application is in condition for allowance.

Allowable Subject Matter

Claims 1, 2, 4-7, 9, 11-16, 18-21, 23 and 25-42 are allowed.

The following is an examiner's statement of reasons for allowance:

Previously cited prior arts (See PTO-892) fail to teach the feature of "...comparing motion information of the first spatial motion vector prediction candidate with motion information of spatial motion vector prediction candidates in a subset of the set of spatial motion vector prediction candidates, wherein the subset is less than the set, and wherein the subset is determined based on a location of the block associated with the first spatial motion vector prediction candidate; determining to include the first spatial motion vector prediction candidate in a motion vector prediction list for the block of pixels based on the comparing; selecting one motion vector prediction candidate from the motion vector prediction list to represent a motion vector prediction for the block of pixels; and performing a motion compensated prediction based

on the selected motion vector prediction candidate to construct the block of pixels," as recited in claim 1 and similarly recited in claims 9, 15 and 23.

The rest of the dependent claims are allowed by virtue of their dependency from allowed claims 1, 9, 15 and 23.

Any comments considered necessary by applicant must be submitted no later than the payment of the issue fee and, to avoid processing delays, should preferably accompany the issue fee. Such submissions should be clearly labeled "Comments on Statement of Reasons for Allowance."

Conclusion

Any inquiry concerning this communication or earlier communications from the examiner should be directed to NATHNAEL AYNALEM whose telephone number is (571)270-1482. The examiner can normally be reached M-F 9AM-5:30 PM ET.

Examiner interviews are available via telephone, in-person, and video conferencing using a USPTO supplied web-based collaboration tool. To schedule an interview, applicant is encouraged to use the USPTO Automated Interview Request (AIR) at http://www.uspto.gov/interviewpractice.

If attempts to reach the examiner by telephone are unsuccessful, the examiner's supervisor, SATH PERUNGAVOOR can be reached on 571-272-7455. The fax phone number for the organization where this application or proceeding is assigned is 571-273-8300.

Information regarding the status of published or unpublished applications may be obtained from Patent Center. Unpublished application information in Patent Center is available to registered users. To file and manage patent submissions in Patent Center, visit:

https://patentcenter.uspto.gov. Visit https://www.uspto.gov/patents/apply/patent-center for more information about Patent Center and https://www.uspto.gov/patents/docx for information about filing in DOCX format. For additional questions, contact the Electronic Business Center (EBC) at 866-217-9197 (toll-free). If you would like assistance from a USPTO Customer Service Representative, call 800-786-9199 (IN USA OR CANADA) or 571-272-1000.

/NATHNAEL AYNALEM/
Primary Examiner, Art Unit 2488

Issue Classification	Application/Control No.	Applicant(s)/Patent Under Reexamination
	16/741,156	BICI et al.
	Examiner	**Art Unit**
	NATHNAEL AYNALEM	2488

CPC						
Symbol					**Type**	**Version**
H04N	/	19	/	521	F	2014-11-01
H04N	/	19	/	52	I	2014-11-01
H04N	/	19	/	176	A	2014-11-01
H04N	/	19	/	182	A	2014-11-01

CPC Combination Sets								
Symbol					**Type**	**Set**	**Ranking**	**Version**
	/		/					

NONE (Assistant Examiner)	(Date)	**Total Claims Allowed:** 34	
/NATHNAEL AYNALEM/ Primary Examiner, Art Unit 2488 (Primary Examiner)	09 June 2022 (Date)	O.G. Print Claim(s) 1	O.G. Print Figure 1

U.S. Patent and Trademark Office

Part of Paper No.: 20220608

Nokia Exhibit 2004, p. 236
Amazon.com v. Nokia
IPR2024-00605

Issue Classification	Application/Control No.	Applicant(s)/Patent Under Reexamination
	16/741,156	BICI et al.
	Examiner	**Art Unit**
	NATHNAEL AYNALEM	2488

INTERNATIONAL CLASSIFICATION				
CLAIMED				
H04N19/513	/	19	/	513
H04N19/52	/	19	/	52
H04N19/176	/	19	/	176
H04N19/182	/	19	/	182

NON-CLAIMED				
	/		/	

US ORIGINAL CLASSIFICATION	
CLASS	**SUBCLASS**

CROSS REFERENCES(S)						
CLASS	**SUBCLASS (ONE SUBCLASS PER BLOCK)**					

NONE (Assistant Examiner) (Date)		**Total Claims Allowed:** 34	
/NATHNAEL AYNALEM/ Primary Examiner, Art Unit 2488 (Primary Examiner)	09 June 2022 (Date)	O.G. Print Claim(s) 1	O.G. Print Figure 1

U.S. Patent and Trademark Office

Part of Paper No.: 20220608

Nokia Exhibit 2004, p. 237
Amazon.com v. Nokia
IPR2024-00605

Issue Classification	Application/Control No.	Applicant(s)/Patent Under Reexamination
	16/741,156	BICI et al.
	Examiner	**Art Unit**
	NATHNAEL AYNALEM	2488

☐ Claims renumbered in the same order as presented by applicant ☐ CPA ☑ T.D. ☐ R.1.47

CLAIMS

Final	Original	Final	Original	Final	Original	Final	Original	Final	Original	Final	Original	Final	Original	Final	Original
1	1	11	10	21	19	31	28	15	37						
2	2	12	11	22	20		29	16	38						
	3	13	12	23	21		30	17	39						
3	4	14	13		22	7	31	32	40						
4	5		14	27	23	8	32	33	41						
5	6	18	15		24	9	33	34	42						
6	7	19	16	28	25	24	34								
	8		17	29	26	25	35								
10	9	20	18	30	27	26	36								

NONE (Assistant Examiner)	(Date)	**Total Claims Allowed:** 34	
/NATHNAEL AYNALEM/ Primary Examiner, Art Unit 2488 (Primary Examiner)	09 June 2022 (Date)	O.G. Print Claim(s) 1	O.G. Print Figure 1

U.S. Patent and Trademark Office

Part of Paper No.: 20220608

Nokia Exhibit 2004, p. 238
Amazon.com v. Nokia
IPR2024-00605

Search Notes	Application/Control No.	Applicant(s)/Patent Under Reexamination
	16/741,156	BICI et al.
	Examiner	**Art Unit**
	NATHNAEL AYNALEM	2488

CPC - Searched*		
Symbol	**Date**	**Examiner**
H04N19/51 , H04N19/513 , H04N19/50 , H04N19/517 , H04N19/52 , H04N19/10 , H04N19/103 , H04N19/107 , H04N19/109 , H04N19/11 , H04N19/33 , H04N19/31 , H04N19/503 , H04N19/428 , H04N19/55 , H04N19/593 , H04N19/59	06/09/2022	NA

CPC Combination Sets - Searched*		
Symbol	**Date**	**Examiner**

US Classification - Searched*			
Class	**Subclass**	**Date**	**Examiner**
375	240.01-240.29	06/09/2022	NA

* See search history printout included with this form or the SEARCH NOTES box below to determine the scope of the search.

Search Notes		
Search Notes	**Date**	**Examiner**
Inventor's name search on PE2E, see attached	06/08/2022	NA
Assignee search on PE2E, see attached	06/08/2022	NA
The above CPC symbols and the US classification are further limited by a text search on PE2E search, see attached	06/09/2022	NA
NPL search on ip.com, see attached	02/23/2021	NA
NPL search from JCT-VC document management system	02/23/2021	NA

Nokia Exhibit 2004, p. 239
Amazon.com v. Nokia
IPR2024-00605

Search Notes	Application/Control No.	Applicant(s)/Patent Under Reexamination
	16/741,156	BICI et al.
	Examiner	**Art Unit**
	NATHNAEL AYNALEM	2488

Interference Search			
US Class/CPC Symbol	**US Subclass/CPC Group**	**Date**	**Examiner**
	Interference search of the claims (USPGPUB, USPAT)	06/09/2022	NA

Nokia Exhibit 2004, p. 240
Amazon.com v. Nokia
IPR2024-00605

PE2E SEARCH - Search History (Prior Art)

Ref #	Hits	Search Query	DBs	Default Operator	Plurals	British Equivalents	Time Stamp
L152	270	((("BICI") near3 ("Mehmet")) OR (("LAINEMA") near3 ("Jani")) OR (("UGUR") near3 ("Kemal"))).INV.	(US-PGPUB; USPAT; USOCR; EPO; JPO; DERWENT)	OR	ON	ON	2022/06/08 04:34 PM
L153	3599	((("NOKIA") near3 ("TECHNOLOGIES") near3 ("OY"))).AS,AANM.	(USPAT)	OR	ON	ON	2022/06/08 04:34 PM
L154	165074	(compar$ OR comparision) WITH (motion OR mvp$2 OR mv OR amvp$2)	(US-PGPUB; USPAT; USOCR; EPO; JPO; DERWENT)	OR	ON	ON	2022/06/08 04:35 PM
L155	14298	(add$3 OR includ$3) WITH (motion OR mvp$2 OR mv OR amvp$2) WITH list$	(US-PGPUB; USPAT; USOCR; EPO; JPO; DERWENT)	OR	ON	ON	2022/06/08 04:35 PM
L156	13450	(select$ OR choos$ OR elect$ OR determin$) WITH (motion OR mvp$2 OR mv OR amvp$2) WITH list$	(US-PGPUB; USPAT; USOCR; EPO; JPO; DERWENT)	OR	ON	ON	2022/06/08 04:36 PM
L157	5092	154 AND 155	(US-PGPUB; USPAT; USOCR; EPO; JPO; DERWENT)	OR	ON	ON	2022/06/08 04:37 PM
L158	181399	((H04N19/51 OR H04N19/513 OR H04N19/50 OR H04N19/517 OR H04N19/52 OR H04N19/10 OR H04N19/103 OR H04N19/107 OR H04N19/109 OR H04N19/11 OR H04N19/33 OR H04N19/31 OR H04N19/503 OR H04N19/428 OR H04N19/55 OR H04N19/593 OR H04N19/59).cpc. OR (375/240.01-240.29).ccls.)	(US-PGPUB; USPAT; USOCR; FPRS; EPO; JPO; DERWENT; IBM_TDB)	OR	ON	ON	2022/06/08 04:37 PM
L160	3701	156 AND 157	(US-PGPUB; USPAT; USOCR)	OR	ON	ON	2022/06/08 04:38 PM
L161	2624	158 AND 160	(US-PGPUB; USPAT; USOCR)	OR	ON	ON	2022/06/08 04:38 PM
L162	41	152 AND 160	(US-PGPUB; USPAT; USOCR; EPO; JPO;	OR	ON	ON	2022/06/08 04:39 PM

Nokia Exhibit 2004, p. 241
Amazon.com v. Nokia
IPR2024-00605

			DERWENT)				
L163	81	153 AND 160	(US-PGPUB; USPAT; USOCR; EPO; JPO; DERWENT)	OR	ON	ON	2022/06/08 04:39 PM
L167	1418	(determin$5 OR calculat$3 OR judg$3 OR evaluat$3 OR decid$3 OR comput$3 OR estimat$3 OR deriv$3 OR deduc$3 OR analy$4 OR analz$5 OR quantify$3 OR quantification OR specify$3 OR infer$4 OR extrapolate$3 OR extract$3 OR measur$3 OR obtain$3 OR check$3 OR generat$ OR designat$) WITH (motion adj5 vector OR mvp$2 OR mv OR amvp$2) WITH (location OR position) WITH (subset OR set OR subgroup) WITH (block OR macroblock OR coding adj5 unit OR cu)	(US-PGPUB; USPAT; USOCR; EPO; JPO; DERWENT)	OR	ON	ON	2022/06/08 04:50 PM
L168	226	161 AND 167	(US-PGPUB; USPAT; USOCR)	OR	ON	ON	2022/06/08 04:50 PM
L169	56	(US-10091524-$ | US-11102479-$ | US-11109059-$ | US-11134245-$ | US-11159819-$ | US-20110194609-$ | US-20130107958-$ | US-20130128982-$ | US-20130188716-$ | US-20140092968-$ | US-20140269926-$ | US-20140294087-$ | US-20150078451-$ | US-20150131740-$ | US-20150222922-$ | US-20150271516-$ | US-20160191944-$ | US-20160219278-$ | US-20170310990-$ | US-20170339425-$ | US-20180176596-$ | US-20190268611-$ | US-20190342572-$ | US-20200092581-$ | US-20200137398-$ | US-20200162743-$ | US-20200221077-$ | US-	(US-PGPUB; USPAT; USOCR)	OR	ON	ON	2022/06/08 05:11 PM

		20200221097-$ | US-20200275093-$ | US-20200382771-$ | US-20200396476-$ | US-20210021825-$ | US-20210021858-$ | US-20210021861-$ | US-20210037238-$ | US-20210058628-$ | US-20210152843-$ | US-20210160528-$ | US-20210160532-$ | US-20210176472-$ | US-20210218955-$ | US-20210218980-$ | US-20210266586-$ | US-20210281847-$ | US-20210314602-$ | US-20210314604-$ | US-20210337232-$ | US-20210368201-$ | US-20210385483-$ | US-20210409686-$ | US-20210409723-$ | US-20210409754-$ | US-20220014780-$ | US-20220030268-$ | US-20220060739-$ | US-20220070445-$ | US-20220103826-$ | US-20220103854-$ | US-20220141452-$ | US-20220159265-$ | US-5428403-$).DID.					
L170	27	161 AND 169	(US-PGPUB; USPAT; USOCR; FPRS; EPO; JPO; DERWENT; IBM_TDB)	OR	ON	ON	2022/06/08 05:11 PM
L172	59309	(compar$3 OR comparison OR equat$ OR evaluat$ OR check$3 OR correlat$3 OR match$3) WITH (motion adj4 vector OR mvp$2 OR mv OR amvp$)	(US-PGPUB; USPAT; USOCR; EPO; JPO; DERWENT)	OR	ON	ON	2022/06/09 10:54 AM
L173	1488	155 SAME 172	(US-PGPUB; USPAT; USOCR; EPO; JPO; DERWENT)	OR	ON	ON	2022/06/09 10:54 AM
L174	191	167 AND 173	(US-PGPUB; USPAT; USOCR; EPO; JPO; DERWENT)	OR	ON	ON	2022/06/09 10:55 AM
L175	187	158 AND 174	(US-PGPUB; USPAT; USOCR; EPO; JPO; DERWENT)	OR	ON	ON	2022/06/09 10:55 AM

PE2E SEARCH - Search History (Interference)

Ref #	Hits	Search Query	DBs	Default Operator	Plurals	British Equivalents	Time Stamp
N8	460	((select$5 OR choos$3 OR pick$3 OR elect$3 OR decid$3 OR choice$1 OR chosen OR specify$3 OR determin$) WITH (motion adj5 vector OR mvp OR mv) WITH candidate$1 WITH (spatial$2 OR intra$)).clm.	(US-PGPUB; USPAT)	OR	ON	ON	2022/06/09 10:46 AM
N9	32741	(("same" OR similar2 OR identical$2 OR compar$) WITH (motion OR mvp$2 OR mv)).clm.	(US-PGPUB; USPAT)	OR	ON	ON	2022/06/09 10:46 AM
N10	2066	((location OR position) WITH (block OR macroblock) WITH (motion adj4 vector OR mv$ OR mvp$)).clm.	(US-PGPUB; USPAT)	OR	ON	ON	2022/06/09 10:48 AM
N11	6413	((determin$3 OR check$3 OR decid$ OR decision) WITH (add$ OR includ$3 OR exclud$) WITH (candidate$1) WITH (list$3 OR set)).clm.	(US-PGPUB; USPAT)	OR	ON	ON	2022/06/09 10:48 AM
N12	878	((select$5 OR choos$3 OR pick$3 OR elect$3 OR decid$3 OR choice$1 OR chosen OR specify$3 OR determin$) WITH (motion adj5 vector OR mvp OR mv) WITH candidate$1 WITH list$).clm.	(US-PGPUB; USPAT)	OR	ON	ON	2022/06/09 10:50 AM
N13	4177	((motion adj4 compensat$) WITH predict$).clm.	(US-PGPUB; USPAT)	OR	ON	ON	2022/06/09 10:50 AM
N14	90	N8 AND N9 AND N10	(US-PGPUB; USPAT)	OR	ON	ON	2022/06/09 10:51 AM
N15	23	N14 AND N11 AND N12	(US-PGPUB; USPAT)	OR	ON	ON	2022/06/09 10:51 AM
N16	2	N13 AND N15	(US-PGPUB; USPAT)	OR	ON	ON	2022/06/09 10:51 AM

PTO/SB/30EFS (01-22)
Approved for use through 05/31/2024. OMB 0651-0031
U.S. Patent and Trademark Office; U.S. DEPARTMENT OF COMMERCE
Under the Paperwork Reduction Act of 1995, no persons are required to respond to a collection of information unless it contains a valid OMB control number.

REQUEST FOR CONTINUED EXAMINATION(RCE)TRANSMITTAL
(Submitted Only via EFS-Web)

Application Number	16/741,156	Filing Date	2020-01-13	Docket Number (if applicable)	042933/542643	Art Unit	2488
First Named Inventor	Bici et al.			Examiner Name	Nathnael B. Aynalem		

This is a Request for Continued Examination (RCE) under 37 CFR 1.114 of the above-identified application.
Request for Continued Examination (RCE) practice under 37 CFR 1.114 does not apply to any utility or plant application filed prior to June 8, 1995, or to any design application. The Instruction Sheet for this form is located at WWW.USPTO.GOV

SUBMISSION REQUIRED UNDER 37 CFR 1.114

Note: If the RCE is proper, any previously filed unentered amendments and amendments enclosed with the RCE will be entered in the order in which they were filed unless applicant instructs otherwise. If applicant does not wish to have any previously filed unentered amendment(s) entered, applicant must request non-entry of such amendment(s).

☐ Previously submitted. If a final Office action is outstanding, any amendments filed after the final Office action may be considered as a submission even if this box is not checked.

- ☐ Consider the arguments in the Appeal Brief or Reply Brief previously filed on _____
- ☐ Other _____

☒ Enclosed

- ☐ Amendment/Reply
- ☒ Information Disclosure Statement (IDS)
- ☐ Affidavit(s)/ Declaration(s)
- ☐ Other _____

MISCELLANEOUS

☐ Suspension of action on the above-identified application is requested under 37 CFR 1.103(c) for a period of months _____
(Period of suspension shall not exceed 3 months; Fee under 37 CFR 1.17(i) required)

☐ Other _____

FEES

☒ **The RCE fee under 37 CFR 1.17(e) is required by 37 CFR 1.114 when the RCE is filed.**
The Director is hereby authorized to charge any underpayment of fees, or credit any overpayments, to Deposit Account No 160605

SIGNATURE OF APPLICANT, ATTORNEY, OR AGENT REQUIRED

X Patent Practitioner Signature

Applicant Signature

Nokia Exhibit 2004, p. 245
Amazon.com v. Nokia
IPR2024-00605

PTO/SB/30EFS (01-22)
Approved for use through 05/31/2024. OMB 0651-0031
U.S. Patent and Trademark Office; U.S. DEPARTMENT OF COMMERCE
Under the Paperwork Reduction Act of 1995, no persons are required to respond to a collection of information unless it contains a valid OMB control number.

Signature of Registered U.S. Patent Practitioner			
Signature	/Guy R. Gosnell/	Date (YYYY-MM-DD)	2022-08-26
Name	Guy R. Gosnell	Registration Number	34610

This collection of information is required by 37 CFR 1.114. The information is required to obtain or retain a benefit by the public which is to file (and by the USPTO to process) an application. Confidentiality is governed by 35 U.S.C. 122 and 37 CFR 1.11 and 1.14. This collection is estimated to take 12 minutes to complete, including gathering, preparing, and submitting the completed application form to the USPTO. Time will vary depending upon the individual case. Any comments on the amount of time you require to complete this form and/or suggestions for reducing this burden, should be sent to the Chief Information Officer, U.S. Patent and Trademark Office, U.S. Department of Commerce, P.O. Box 1450, Alexandria, VA 22313-1450.

If you need assistance in completing the form, call 1-800-PTO-9199 and select option 2.

Nokia Exhibit 2004, p. 246
Amazon.com v. Nokia
IPR2024-00605

Privacy Act Statement

The Privacy Act of 1974 (P.L. 93-579) requires that you be given certain information in connection with your submission of the attached form related to a patent application or patent. Accordingly, pursuant to the requirements of the Act, please be advised that: (1) the general authority for the collection of this information is 35 U.S.C. 2(b)(2); (2) furnishing of the information solicited is voluntary; and (3) the principal purpose for which the information is used by the U.S. Patent and Trademark Office is to process and/or examine your submission related to a patent application or patent. If you do not furnish the requested information, the U.S. Patent and Trademark Office may not be able to process and/or examine your submission, which may result in termination of proceedings or abandonment of the application or expiration of the patent.

The information provided by you in this form will be subject to the following routine uses:

1. The information on this form will be treated confidentially to the extent allowed under the Freedom of Information Act (5 U.S.C. 552) and the Privacy Act (5 U.S.C. 552a). Records from this system of records may be disclosed to the Department of Justice to determine whether the Freedom of Information Act requires disclosure of these records.

2. A record from this system of records may be disclosed, as a routine use, in the course of presenting evidence to a court, magistrate, or administrative tribunal, including disclosures to opposing counsel in the course of settlement negotiations.

3. A record in this system of records may be disclosed, as a routine use, to a Member of Congress submitting a request involving an individual, to whom the record pertains, when the individual has requested assistance from the Member with respect to the subject matter of the record.

4. A record in this system of records may be disclosed, as a routine use, to a contractor of the Agency having need for the information in order to perform a contract. Recipients of information shall be required to comply with the requirements of the Privacy Act of 1974, as amended, pursuant to 5 U.S.C. 552a(m).

5. A record related to an International Application filed under the Patent Cooperation Treaty in this system of records may be disclosed, as a routine use, to the International Bureau of the World Intellectual Property Organization, pursuant to the Patent Cooperation Treaty.

6. A record in this system of records may be disclosed, as a routine use, to another federal agency for purposes of National Security review (35 U.S.C. 181) and for review pursuant to the Atomic Energy Act (42 U.S.C. 218(c)).

7. A record from this system of records may be disclosed, as a routine use, to the Administrator, General Services, or his/her designee, during an inspection of records conducted by GSA as part of that agency's responsibility to recommend improvements in records management practices and programs, under authority of 44 U.S.C. 2904 and 2906. Such disclosure shall be made in accordance with the GSA regulations governing inspection of records for this purpose, and any other relevant (i.e., GSA or Commerce) directive. Such disclosure shall not be used to make determinations about individuals.

8. A record from this system of records may be disclosed, as a routine use, to the public after either publication of the application pursuant to 35 U.S.C. 122(b) or issuance of a patent pursuant to 35 U.S.C. 151. Further, a record may be disclosed, subject to the limitations of 37 CFR 1.14, as a routine use, to the public if the record was filed in an application which became abandoned or in which the proceedings were terminated and which application is referenced by either a published application, an application open to public inspections or an issued patent.

9. A record from this system of records may be disclosed, as a routine use, to a Federal, State, or local law enforcement agency, if the USPTO becomes aware of a violation or potential violation of law or regulation.

Nokia Exhibit 2004, p. 247
Amazon.com v. Nokia
IPR2024-00605

IN THE UNITED STATES PATENT AND TRADEMARK OFFICE

In re:	Bici et al.	Confirmation No.:	3751
Appl. No.:	16/741,156	Group Art Unit:	2488
Filed:	January 13, 2020	Examiner:	Nathnael B. Aynalem
For:	METHOD FOR CODING AND AN APPARATUS		

Submitted via EFS-Web
Commissioner for Patents
P.O. Box 1450
Alexandria, VA 22313-1450

SUPPLEMENTAL INFORMATION DISCLOSURE STATEMENT
CITATION UNDER 37 C.F.R. § 1.97

Attached is a list of documents on form PTO-SB08. Copies of all listed documents (other than U.S. patents, U.S. patent application publications, or patents or publications otherwise determined cumulative) are attached, except those (if any) that were previously submitted to, or cited by, the Office during the prosecution of any application(s) upon which the present application directly relies for an earlier effective filing date under 35 U.S.C. § 120. It is noted that 37 C.F.R. § 1.98(d) establishes that copies of documents previously submitted to, or cited by, the Office during prosecution of the above application(s) are not required to be furnished; however, copies of such documents will be furnished upon request. Also attached is a translation or a concise explanation of each non-English language document.

It is requested that the Examiner consider these documents and officially make them of record in accordance with the provisions of 37 C.F.R. § 1.97 and Section 609 of the MPEP. By identifying the listed documents, Applicant in no way makes any admission as to the prior art status of the listed documents but is instead identifying the listed documents for the sake of full disclosure.

Respectfully submitted,

/Guy R. Gosnell/

Guy R. Gosnell
Registration No. 34,610

Customer No. 10949
ALSTON & BIRD LLP
One South at The Plaza
101 South Tryon Street, Suite 4000
Charlotte, NC 28280-4000
Tel Charlotte Office (704) 444-1000
Fax Charlotte Office (704) 444-1111

Nokia Exhibit 2004, p. 248
Amazon.com v. Nokia
IPR2024-00605

Substitute for form SB08 (Revised 07/09)				Complete if Known	
INFORMATION DISCLOSURE STATEMENT BY APPLICANT *(Use as many sheets as necessary)*				Application Number	16/741,156
				Filing Date	January 13, 2020
				First Named Inventor	Bici et al.
				Art Unit	2488
				Examiner Name	Nathnael B. Aynalem
Sheet	1	of	1	Attorney Docket Number	042933/542643

U. S. PATENT DOCUMENTS

Examiner Initials*	Cite No.	Document Number Number – Kind Code (if known)	Publication Date MM-DD-YYYY	Name of Patentee or Applicant of Cited Document	Pages, Columns, Lines, Where Relevant Passages of Relevant Figures Appear
	1	US-5,122,875	06-16-1992	Raychaudhuri et al.	
	2	US-2006/0215762 A1	09-28-2006	Han et al.	

FOREIGN PATENT DOCUMENTS

Examiner Initials	Cite No.	Foreign Patent Document Country Code – Number Kind Code (if known)	Publication Date MM-DD-YYYY	Name of Patentee or Applicant of Cited Document	Pages, Columns, Lines, Where Relevant Passages or Relevant Figures Appear	English Language Translation Attached
	3	RU 2128405 C1	03-27-1999	Gen Electric		Abstract; corresponds to US-5,122,875
	4	RU 2341035 C1	12-10-2008	Samsung Electronics Co Ltd		Abstract; corresponds to US-2006/0215762 A1
	5	WO 2007/037912 A2	04-05-2007	Sony Electronics Inc.		

OTHER DOCUMENTS

Examiner Initials*	Cite No.	Include name of the author (in CAPITAL LETTERS), title of the article (when appropriate), title of the item (book, magazine, journal, serial, symposium, catalog, etc.), date, page(s) , volume-issue number(s), publisher, city and/or country where published.	English Language Translation Attached
	6	Decision to Grant for Russian Application No. 2014120207/12 dated September 9, 2015, 25 pages.	Yes
	7	Notice of Allowance for Taiwanese Application No. 101140777 dated April 1, 2016, 3 pages.	Yes

Examiner Signature		Date Considered	

*Examiner: Initial if reference considered, whether or not citation is in conformance with MPEP 609. Draw line through citation if not in conformance and not considered. Include copy of this form with next communication to applicant.

Submitted August 26, 2022

Electronic Patent Application Fee Transmittal

Application Number:	16741156
Filing Date:	13-Jan-2020
Title of Invention:	METHOD FOR CODING AND AN APPARATUS
First Named Inventor/Applicant Name:	Mehmet Oguz BICI
Filer:	Guy Randall Gosnell/Kristen Mims
Attorney Docket Number:	042933/542643

Filed as Large Entity

Filing Fees for Utility under 35 USC 111(a)

Description	Fee Code	Quantity	Amount	Sub-Total in USD($)
Basic Filing:				
Pages:				
Claims:				
Miscellaneous-Filing:				
Petition:				
Patent-Appeals-and-Interference:				
Post-Allowance-and-Post-Issuance:				
Extension-of-Time:				

Description	Fee Code	Quantity	Amount	Sub-Total in USD($)
Miscellaneous:				
RCE- 2ND AND SUBSEQUENT REQUEST	1820	1	2000	2000
		Total in USD ($)		**2000**

Electronic Acknowledgement Receipt

EFS ID:	46497113
Application Number:	16741156
International Application Number:	
Confirmation Number:	3751
Title of Invention:	METHOD FOR CODING AND AN APPARATUS
First Named Inventor/Applicant Name:	Mehmet Oguz BICI
Customer Number:	10949
Filer:	Guy Randall Gosnell/Kristen Mims
Filer Authorized By:	Guy Randall Gosnell
Attorney Docket Number:	042933/542643
Receipt Date:	26-AUG-2022
Filing Date:	13-JAN-2020
Time Stamp:	15:05:38
Application Type:	Utility under 35 USC 111(a)

Payment information:

Submitted with Payment	yes
Payment Type	DA
Payment was successfully received in RAM	$2000
RAM confirmation Number	E20228PF05521172
Deposit Account	
Authorized User	

The Director of the USPTO is hereby authorized to charge indicated fees and credit any overpayment as follows:

File Listing:

Document Number	Document Description	File Name	File Size(Bytes)/ Message Digest	Multi Part /.zip	Pages (if appl.)
1	Request for Continued Examination (RCE)	542643_RCE.PDF	1680898 75973c7c97369551c981efe0c664a0a77221099c	no	3
Warnings:					
Information:					
2		542643_IDS.pdf	274739 318119e30d98a241f4f972f28272460df32613dd	yes	2
	Multipart Description/PDF files in .zip description				
	Document Description		**Start**	**End**	
	Transmittal Letter		1	1	
	Information Disclosure Statement (IDS) Form (SB08)		2	2	
Warnings:					
Information:					
3	Foreign Reference	542643_RU2128405C1_1.PDF	2004476 7ee65e9cca5abf79e661b333ed725edc068aa6ac	no	27
Warnings:					
Information:					
4	Foreign Reference	542643_RU2341035C1_1.PDF	2195856 d7a3805709f1f6653d772dedd736bac40314464e	no	37
Warnings:					
Information:					
5	Foreign Reference	542643_WO2007037912A2_1.PDF	960721 8cd8bdfe3b6f9d3f2582b4077c0dae1c91529878	no	24
Warnings:					
Information:					

6	Non Patent Literature	542643_RUNOA_1.PDF	1978080 a53802506c83129e5387427154ad0992c0d25665	no	25
Warnings:					
Information:					
7	Non Patent Literature	542643_TWNOA_1.PDF	69969 43d1da9d38333fd71869510e63c050f7f270fe5f	no	3
Warnings:					
Information:					
8	Fee Worksheet (SB06)	fee-info.pdf	38055 8eec6568cc5efad0430817c912fdc68ab289d789	no	2
Warnings:					
Information:					
			Total Files Size (in bytes):	9202794	

This Acknowledgement Receipt evidences receipt on the noted date by the USPTO of the indicated documents, characterized by the applicant, and including page counts, where applicable. It serves as evidence of receipt similar to a Post Card, as described in MPEP 503.

<u>New Applications Under 35 U.S.C. 111</u>
If a new application is being filed and the application includes the necessary components for a filing date (see 37 CFR 1.53(b)-(d) and MPEP 506), a Filing Receipt (37 CFR 1.54) will be issued in due course and the date shown on this Acknowledgement Receipt will establish the filing date of the application.
<u>National Stage of an International Application under 35 U.S.C. 371</u>
If a timely submission to enter the national stage of an international application is compliant with the conditions of 35 U.S.C. 371 and other applicable requirements a Form PCT/DO/EO/903 indicating acceptance of the application as a national stage submission under 35 U.S.C. 371 will be issued in addition to the Filing Receipt, in due course.
<u>New International Application Filed with the USPTO as a Receiving Office</u>
If a new international application is being filed and the international application includes the necessary components for an international filing date (see PCT Article 11 and MPEP 1810), a Notification of the International Application Number and of the International Filing Date (Form PCT/RO/105) will be issued in due course, subject to prescriptions concerning national security, and the date shown on this Acknowledgement Receipt will establish the international filing date of the application.

UNITED STATES PATENT AND TRADEMARK OFFICE

UNITED STATES DEPARTMENT OF COMMERCE
United States Patent and Trademark Office
Address: COMMISSIONER FOR PATENTS
P.O. Box 1450
Alexandria, Virginia 22313-1450
www.uspto.gov

NOTICE OF ALLOWANCE AND FEE(S) DUE

10949 7590 09/13/2022
Nokia Corporation and Alston & Bird LLP
c/o Alston & Bird LLP
One South at The Plaza, 101 South Tryon Street
Suite 4000
Charlotte, NC 28280-4000

EXAMINER
AYNALEM, NATHNAEL B

ART UNIT	PAPER NUMBER
2488	

DATE MAILED: 09/13/2022

APPLICATION NO.	FILING DATE	FIRST NAMED INVENTOR	ATTORNEY DOCKET NO.	CONFIRMATION NO.
16/741,156	01/13/2020	Mehmet Oguz BICI	042933/542643	3751

TITLE OF INVENTION: METHOD FOR CODING AND AN APPARATUS

APPLN. TYPE	ENTITY STATUS	ISSUE FEE DUE	PUBLICATION FEE DUE	PREV. PAID ISSUE FEE	TOTAL FEE(S) DUE	DATE DUE
nonprovisional	UNDISCOUNTED	$1200	$0.00	$0.00	$1200	12/13/2022

THE APPLICATION IDENTIFIED ABOVE HAS BEEN EXAMINED AND IS ALLOWED FOR ISSUANCE AS A PATENT. PROSECUTION ON THE MERITS IS CLOSED. THIS NOTICE OF ALLOWANCE IS NOT A GRANT OF PATENT RIGHTS. THIS APPLICATION IS SUBJECT TO WITHDRAWAL FROM ISSUE AT THE INITIATIVE OF THE OFFICE OR UPON PETITION BY THE APPLICANT. SEE 37 CFR 1.313 AND MPEP 1308.

THE ISSUE FEE AND PUBLICATION FEE (IF REQUIRED) MUST BE PAID WITHIN THREE MONTHS FROM THE MAILING DATE OF THIS NOTICE OR THIS APPLICATION SHALL BE REGARDED AS ABANDONED. THIS STATUTORY PERIOD CANNOT BE EXTENDED. SEE 35 U.S.C. 151. THE ISSUE FEE DUE INDICATED ABOVE DOES NOT REFLECT A CREDIT FOR ANY PREVIOUSLY PAID ISSUE FEE IN THIS APPLICATION. IF AN ISSUE FEE HAS PREVIOUSLY BEEN PAID IN THIS APPLICATION (AS SHOWN ABOVE), THE RETURN OF PART B OF THIS FORM WILL BE CONSIDERED A REQUEST TO REAPPLY THE PREVIOUSLY PAID ISSUE FEE TOWARD THE ISSUE FEE NOW DUE.

HOW TO REPLY TO THIS NOTICE:

I. Review the ENTITY STATUS shown above. If the ENTITY STATUS is shown as SMALL or MICRO, verify whether entitlement to that entity status still applies.

If the ENTITY STATUS is the same as shown above, pay the TOTAL FEE(S) DUE shown above.

If the ENTITY STATUS is changed from that shown above, on PART B - FEE(S) TRANSMITTAL, complete section number 5 titled "Change in Entity Status (from status indicated above)".

For purposes of this notice, small entity fees are 1/2 the amount of undiscounted fees, and micro entity fees are 1/2 the amount of small entity fees.

II. PART B - FEE(S) TRANSMITTAL, or its equivalent, must be completed and returned to the United States Patent and Trademark Office (USPTO) with your ISSUE FEE and PUBLICATION FEE (if required). If you are charging the fee(s) to your deposit account, section "4b" of Part B - Fee(s) Transmittal should be completed. If an equivalent of Part B is filed, a request to reapply a previously paid issue fee must be clearly made, and delays in processing may occur due to the difficulty in recognizing the paper as an equivalent of Part B.

III. All communications regarding this application must give the application number. Please direct all communications prior to issuance to Mail Stop ISSUE FEE unless advised to the contrary.

IMPORTANT REMINDER: Maintenance fees are due in utility patents issuing on applications filed on or after Dec. 12, 1980. It is patentee's responsibility to ensure timely payment of maintenance fees when due. More information is available at www.uspto.gov/PatentMaintenanceFees.

Nokia Exhibit 2004, p. 255
Amazon.com v. Nokia
IPR2024-00605

PART B - FEE(S) TRANSMITTAL

Complete and send this form, together with applicable fee(s), by mail or fax, or via EFS-Web.

By mail, send to: Mail Stop ISSUE FEE
Commissioner for Patents
P.O. Box 1450
Alexandria, Virginia 22313-1450

By fax, send to: (571)-273-2885

INSTRUCTIONS: This form should be used for transmitting the ISSUE FEE and PUBLICATION FEE (if required). Blocks 1 through 5 should be completed where appropriate. All further correspondence including the Patent, advance orders and notification of maintenance fees will be mailed to the current correspondence address as indicated unless corrected below or directed otherwise in Block 1, by (a) specifying a new correspondence address; and/or (b) indicating a separate "FEE ADDRESS" for maintenance fee notifications.

CURRENT CORRESPONDENCE ADDRESS (Note: Use Block 1 for any change of address)

10949 7590 09/13/2022

Nokia Corporation and Alston & Bird LLP
c/o Alston & Bird LLP
One South at The Plaza, 101 South Tryon Street
Suite 4000
Charlotte, NC 28280-4000

Note: A certificate of mailing can only be used for domestic mailings of the Fee(s) Transmittal. This certificate cannot be used for any other accompanying papers. Each additional paper, such as an assignment or formal drawing, must have its own certificate of mailing or transmission.

Certificate of Mailing or Transmission

I hereby certify that this Fee(s) Transmittal is being deposited with the United States Postal Service with sufficient postage for first class mail in an envelope addressed to the Mail Stop ISSUE FEE address above, or being transmitted to the USPTO via EFS-Web or by facsimile to (571) 273-2885, on the date below.

(Typed or printed name)

(Signature)

(Date)

APPLICATION NO.	FILING DATE	FIRST NAMED INVENTOR	ATTORNEY DOCKET NO.	CONFIRMATION NO.
16/741,156	01/13/2020	Mehmet Oguz BICI	042933/542643	3751

TITLE OF INVENTION: METHOD FOR CODING AND AN APPARATUS

APPLN. TYPE	ENTITY STATUS	ISSUE FEE DUE	PUBLICATION FEE DUE	PREV. PAID ISSUE FEE	TOTAL FEE(S) DUE	DATE DUE
nonprovisional	UNDISCOUNTED	$1200	$0.00	$0.00	$1200	12/13/2022

EXAMINER	ART UNIT	CLASS-SUBCLASS
AYNALEM, NATHNAEL B	2488	375-240160

1. Change of correspondence address or indication of "Fee Address" (37 CFR 1.363).

❑ Change of correspondence address (or Change of Correspondence Address form PTO/AIA/122 or PTO/SB/122) attached.

❑ "Fee Address" indication (or "Fee Address" Indication form PTO/AIA/47 or PTO/SB/47; Rev 03-02 or more recent) attached. **Use of a Customer Number is required.**

2. For printing on the patent front page, list
(1) The names of up to 3 registered patent attorneys or agents OR, alternatively,
(2) The name of a single firm (having as a member a registered attorney or agent) and the names of up to 2 registered patent attorneys or agents. If no name is listed, no name will be printed.

1_____
2_____
3_____

3. ASSIGNEE NAME AND RESIDENCE DATA TO BE PRINTED ON THE PATENT (print or type)

PLEASE NOTE: Unless an assignee is identified below, no assignee data will appear on the patent. If an assignee is identified below, the document must have been previously recorded, or filed for recordation, as set forth in 37 CFR 3.11 and 37 CFR 3.81(a). Completion of this form is NOT a substitute for filing an assignment.

(A) NAME OF ASSIGNEE (B) RESIDENCE: (CITY and STATE OR COUNTRY)

Please check the appropriate assignee category or categories (will not be printed on the patent) : ❑ Individual ❑ Corporation or other private group entity ❑ Government

4a. Fees submitted: ❑Issue Fee ❑Publication Fee (if required) ❑Advance Order - # of Copies _____

4b. Method of Payment: *(Please first reapply any previously paid fee shown above)*

❑ Electronic Payment via EFS-Web ❑ Enclosed check ❑ Non-electronic payment by credit card (Attach form PTO-2038)

❑ The Director is hereby authorized to charge the required fee(s), any deficiency, or credit any overpayment to Deposit Account No. _____

5. **Change in Entity Status** (from status indicated above)

❑ Applicant certifying micro entity status. See 37 CFR 1.29

❑ Applicant asserting small entity status. See 37 CFR 1.27

❑ Applicant changing to regular undiscounted fee status.

NOTE: Absent a valid certification of Micro Entity Status (see forms PTO/SB/15A and 15B), issue fee payment in the micro entity amount will not be accepted at the risk of application abandonment.
NOTE: If the application was previously under micro entity status, checking this box will be taken to be a notification of loss of entitlement to micro entity status.
NOTE: Checking this box will be taken to be a notification of loss of entitlement to small or micro entity status, as applicable.

NOTE: This form must be signed in accordance with 37 CFR 1.31 and 1.33. See 37 CFR 1.4 for signature requirements and certifications.

Authorized Signature _____ Date _____

Typed or printed name _____ Registration No. _____

Nokia Exhibit 2004, p. 256
Amazon.com v. Nokia
IPR2024-00605

UNITED STATES DEPARTMENT OF COMMERCE
United States Patent and Trademark Office
Address: COMMISSIONER FOR PATENTS
P.O. Box 1450
Alexandria, Virginia 22313-1450
www.uspto.gov

APPLICATION NO.	FILING DATE	FIRST NAMED INVENTOR	ATTORNEY DOCKET NO.	CONFIRMATION NO.
16/741,156	01/13/2020	Mehmet Oguz BICI	042933/542643	3751

10949 7590 09/13/2022
Nokia Corporation and Alston & Bird LLP
c/o Alston & Bird LLP
One South at The Plaza, 101 South Tryon Street
Suite 4000
Charlotte, NC 28280-4000

EXAMINER
AYNALEM, NATHNAEL B

ART UNIT	PAPER NUMBER
2488	

DATE MAILED: 09/13/2022

Determination of Patent Term Adjustment under 35 U.S.C. 154 (b)
(Applications filed on or after May 29, 2000)

The Office has discontinued providing a Patent Term Adjustment (PTA) calculation with the Notice of Allowance.

Section 1(h)(2) of the AIA Technical Corrections Act amended 35 U.S.C. 154(b)(3)(B)(i) to eliminate the requirement that the Office provide a patent term adjustment determination with the notice of allowance. See Revisions to Patent Term Adjustment, 78 Fed. Reg. 19416, 19417 (Apr. 1, 2013). Therefore, the Office is no longer providing an initial patent term adjustment determination with the notice of allowance. The Office will continue to provide a patent term adjustment determination with the Issue Notification Letter that is mailed to applicant approximately three weeks prior to the issue date of the patent, and will include the patent term adjustment on the patent. Any request for reconsideration of the patent term adjustment determination (or reinstatement of patent term adjustment) should follow the process outlined in 37 CFR 1.705.

Any questions regarding the Patent Term Extension or Adjustment determination should be directed to the Office of Patent Legal Administration at (571)-272-7702. Questions relating to issue and publication fee payments should be directed to the Customer Service Center of the Office of Patent Publication at 1-(888)-786-0101 or (571)-272-4200.

Nokia Exhibit 2004, p. 257
Amazon.com v. Nokia
IPR2024-00605

OMB Clearance and PRA Burden Statement for PTOL-85 Part B

The Paperwork Reduction Act (PRA) of 1995 requires Federal agencies to obtain Office of Management and Budget approval before requesting most types of information from the public. When OMB approves an agency request to collect information from the public, OMB (i) provides a valid OMB Control Number and expiration date for the agency to display on the instrument that will be used to collect the information and (ii) requires the agency to inform the public about the OMB Control Number's legal significance in accordance with 5 CFR 1320.5(b).

The information collected by PTOL-85 Part B is required by 37 CFR 1.311. The information is required to obtain or retain a benefit by the public which is to file (and by the USPTO to process) an application. Confidentiality is governed by 35 U.S.C. 122 and 37 CFR 1.14. This collection is estimated to take 30 minutes to complete, including gathering, preparing, and submitting the completed application form to the USPTO. Time will vary depending upon the individual case. Any comments on the amount of time you require to complete this form and/or suggestions for reducing this burden, should be sent to the Chief Information Officer, U.S. Patent and Trademark Office, U.S. Department of Commerce, P.O. Box 1450, Alexandria, Virginia 22313-1450. DO NOT SEND FEES OR COMPLETED FORMS TO THIS ADDRESS. SEND TO: Commissioner for Patents, P.O. Box 1450, Alexandria, Virginia 22313-1450. Under the Paperwork Reduction Act of 1995, no persons are required to respond to a collection of information unless it displays a valid OMB control number.

Privacy Act Statement

The Privacy Act of 1974 (P.L. 93-579) requires that you be given certain information in connection with your submission of the attached form related to a patent application or patent. Accordingly, pursuant to the requirements of the Act, please be advised that: (1) the general authority for the collection of this information is 35 U.S.C. 2(b)(2); (2) furnishing of the information solicited is voluntary; and (3) the principal purpose for which the information is used by the U.S. Patent and Trademark Office is to process and/or examine your submission related to a patent application or patent. If you do not furnish the requested information, the U.S. Patent and Trademark Office may not be able to process and/or examine your submission, which may result in termination of proceedings or abandonment of the application or expiration of the patent.

The information provided by you in this form will be subject to the following routine uses:

1. The information on this form will be treated confidentially to the extent allowed under the Freedom of Information Act (5 U.S.C. 552) and the Privacy Act (5 U.S.C 552a). Records from this system of records may be disclosed to the Department of Justice to determine whether disclosure of these records is required by the Freedom of Information Act.
2. A record from this system of records may be disclosed, as a routine use, in the course of presenting evidence to a court, magistrate, or administrative tribunal, including disclosures to opposing counsel in the course of settlement negotiations.
3. A record in this system of records may be disclosed, as a routine use, to a Member of Congress submitting a request involving an individual, to whom the record pertains, when the individual has requested assistance from the Member with respect to the subject matter of the record.
4. A record in this system of records may be disclosed, as a routine use, to a contractor of the Agency having need for the information in order to perform a contract. Recipients of information shall be required to comply with the requirements of the Privacy Act of 1974, as amended, pursuant to 5 U.S.C. 552a(m).
5. A record related to an International Application filed under the Patent Cooperation Treaty in this system of records may be disclosed, as a routine use, to the International Bureau of the World Intellectual Property Organization, pursuant to the Patent Cooperation Treaty.
6. A record in this system of records may be disclosed, as a routine use, to another federal agency for purposes of National Security review (35 U.S.C. 181) and for review pursuant to the Atomic Energy Act (42 U.S.C. 218(c)).
7. A record from this system of records may be disclosed, as a routine use, to the Administrator, General Services, or his/her designee, during an inspection of records conducted by GSA as part of that agency's responsibility to recommend improvements in records management practices and programs, under authority of 44 U.S.C. 2904 and 2906. Such disclosure shall be made in accordance with the GSA regulations governing inspection of records for this purpose, and any other relevant (i.e., GSA or Commerce) directive. Such disclosure shall not be used to make determinations about individuals.
8. A record from this system of records may be disclosed, as a routine use, to the public after either publication of the application pursuant to 35 U.S.C. 122(b) or issuance of a patent pursuant to 35 U.S.C. 151. Further, a record may be disclosed, subject to the limitations of 37 CFR 1.14, as a routine use, to the public if the record was filed in an application which became abandoned or in which the proceedings were terminated and which application is referenced by either a published application, an application open to public inspection or an issued patent.
9. A record from this system of records may be disclosed, as a routine use, to a Federal, State, or local law enforcement agency, if the USPTO becomes aware of a violation or potential violation of law or regulation.

Notice of Allowability	Application No. 16/741,156	Applicant(s) BICI et al.	
	Examiner NATHNAEL AYNALEM	Art Unit 2488	AIA (FITF) Status No

-- The MAILING DATE of this communication appears on the cover sheet with the correspondence address--

All claims being allowable, PROSECUTION ON THE MERITS IS (OR REMAINS) CLOSED in this application. If not included herewith (or previously mailed), a Notice of Allowance (PTOL-85) or other appropriate communication will be mailed in due course. **THIS NOTICE OF ALLOWABILITY IS NOT A GRANT OF PATENT RIGHTS.** This application is subject to withdrawal from issue at the initiative of the Office or upon petition by the applicant. See 37 CFR 1.313 and MPEP 1308.

1. ☑ This communication is responsive to request for continued examination filed on 08/26/2022.
   ☐ A declaration(s)/affidavit(s) under **37 CFR 1.130(b)** was/were filed on _____.

2. ☐ An election was made by the applicant in response to a restriction requirement set forth during the interview on _____; the restriction requirement and election have been incorporated into this action.

3. ☑ The allowed claim(s) is/are See Continuation Sheet . As a result of the allowed claim(s), you may be eligible to benefit from the **Patent Prosecution Highway** program at a participating intellectual property office for the corresponding application. For more information, please see **http://www.uspto.gov/patents/init_events/pph/index.jsp** or send an inquiry to **PPHfeedback@uspto.gov.**

4. ☐ Acknowledgment is made of a claim for foreign priority under 35 U.S.C. § 119(a)-(d) or (f).

   Certified copies:

   a) ☐ All b) ☐ Some* c) ☐ None of the:

   1. ☐ Certified copies of the priority documents have been received.
   2. ☐ Certified copies of the priority documents have been received in Application No. _____ .
   3. ☐ Copies of the certified copies of the priority documents have been received in this national stage application from the International Bureau (PCT Rule 17.2(a)).

   * Certified copies not received: _____ .

Applicant has THREE MONTHS FROM THE "MAILING DATE" of this communication to file a reply complying with the requirements noted below. Failure to timely comply will result in ABANDONMENT of this application.
THIS THREE-MONTH PERIOD IS NOT EXTENDABLE.

5. ☐ CORRECTED DRAWINGS (as "replacement sheets") must be submitted.
   ☐ including changes required by the attached Examiner's Amendment / Comment or in the Office action of Paper No./Mail Date _____ .

   Identifying indicia such as the application number (see 37 CFR 1.84(c)) should be written on the drawings in the front (not the back) of each sheet. Replacement sheet(s) should be labeled as such in the header according to 37 CFR 1.121(d).

6. ☐ DEPOSIT OF and/or INFORMATION about the deposit of BIOLOGICAL MATERIAL must be submitted. Note the attached Examiner's comment regarding REQUIREMENT FOR THE DEPOSIT OF BIOLOGICAL MATERIAL.

Attachment(s)

1. ☐ Notice of References Cited (PTO-892)
2. ☑ Information Disclosure Statements (PTO/SB/08), Paper No./Mail Date _____.
3. ☐ Examiner's Comment Regarding Requirement for Deposit of Biological Material _____.
4. ☐ Interview Summary (PTO-413), Paper No./Mail Date. _____.
5. ☐ Examiner's Amendment/Comment
6. ☑ Examiner's Statement of Reasons for Allowance
7. ☐ Other _____.

/NATHNAEL AYNALEM/
Primary Examiner, Art Unit 2488

Nokia Exhibit 2004, p. 259
Amazon.com v. Nokia
IPR2024-00605

Continuation of 3. The allowed claim(s) is/are: 1-2,4-7,9,11-16,18-21,23 and 25-42

Allowability Notice

Notice of Pre-AIA or AIA Status

The present application is being examined under the pre-AIA first to invent provisions.

Continued Examination Under 37 CFR 1.114

A request for continued examination under 37 CFR 1.114, including the fee set forth in 37 CFR 1.17(e), was filed in this application after allowance or after an Office action under *Ex Parte Quayle*, 25 USPQ 74, 453 O.G. 213 (Comm'r Pat. 1935). Since this application is eligible for continued examination under 37 CFR 1.114, and the fee set forth in 37 CFR 1.17(e) has been timely paid, prosecution in this application has been reopened pursuant to 37 CFR 1.114. Applicant's submission filed on 08/26/2022 has been entered.

Response to Amendment/Arguments

Applicant's amendment/arguments with respect to pending claims 1, 2, 4-7, 9, 11-16, 18-21, 23 and 25-42 filed on February 16, 2022 have been fully considered. In view of the amendment of the independent claims 1, 9, 15 and 23, and in view of applicant's arguments, the rejection of all the pending claims is withdrawn. Thus, the current application is in condition for allowance.

Allowable Subject Matter

Claims 1, 2, 4-7, 9, 11-16, 18-21, 23 and 25-42 are allowed.

The following is an examiner's statement of reasons for allowance:

Previously cited prior arts (See PTO-892) fail to teach the feature of "...comparing motion information of the first spatial motion vector prediction candidate with motion information of spatial motion vector prediction candidates in a subset of the set of spatial motion vector prediction candidates, wherein the subset is less than the set, and wherein the subset is determined based on a location of the block associated with the first spatial motion vector prediction candidate; determining to include the first spatial motion vector prediction candidate in a motion vector prediction list for the block of pixels based on the comparing; selecting one motion vector prediction candidate from the motion vector prediction list to represent a motion vector prediction for the block of pixels; and performing a motion compensated prediction based on the selected motion vector prediction candidate to construct the block of pixels," as recited in claim 1 and similarly recited in claims 9, 15 and 23.

The rest of the dependent claims are allowed by virtue of their dependency from allowed claims 1, 9, 15 and 23.

Any comments considered necessary by applicant must be submitted no later than the payment of the issue fee and, to avoid processing delays, should preferably accompany the issue fee. Such submissions should be clearly labeled "Comments on Statement of Reasons for Allowance."

Conclusion

Any inquiry concerning this communication or earlier communications from the examiner should be directed to NATHNAEL AYNALEM whose telephone number is (571)270-1482. The examiner can normally be reached M-F 9AM-5:30 PM ET.

Examiner interviews are available via telephone, in-person, and video conferencing using a USPTO supplied web-based collaboration tool. To schedule an interview, applicant is encouraged to use the USPTO Automated Interview Request (AIR) at http://www.uspto.gov/interviewpractice.

If attempts to reach the examiner by telephone are unsuccessful, the examiner's supervisor, SATH PERUNGAVOOR can be reached on 571-272-7455. The fax phone number for the organization where this application or proceeding is assigned is 571-273-8300.

Information regarding the status of published or unpublished applications may be obtained from Patent Center. Unpublished application information in Patent Center is available to registered users. To file and manage patent submissions in Patent Center, visit: https://patentcenter.uspto.gov. Visit https://www.uspto.gov/patents/apply/patent-center for more information about Patent Center and https://www.uspto.gov/patents/docx for information about filing in DOCX format. For additional questions, contact the Electronic Business Center (EBC) at 866-217-9197 (toll-free). If you would like assistance from a USPTO Customer Service Representative, call 800-786-9199 (IN USA OR CANADA) or 571-272-1000.

/NATHNAEL AYNALEM/
Primary Examiner, Art Unit 2488

Issue Classification	Application/Control No.	Applicant(s)/Patent Under Reexamination
	16/741,156	BICI et al.
	Examiner	**Art Unit**
	NATHNAEL AYNALEM	2488

CPC						
Symbol					**Type**	**Version**
H04N	/	19	/	521	F	2014-11-01
H04N	/	19	/	52	I	2014-11-01
H04N	/	19	/	176	A	2014-11-01
H04N	/	19	/	182	A	2014-11-01

CPC Combination Sets								
Symbol					**Type**	**Set**	**Ranking**	**Version**
	/		/					

NONE (Assistant Examiner)	(Date)	**Total Claims Allowed:** 34	
/NATHNAEL AYNALEM/ Primary Examiner, Art Unit 2488 (Primary Examiner)	31 August 2022 (Date)	O.G. Print Claim(s) 1	O.G. Print Figure 1

U.S. Patent and Trademark Office

Part of Paper No.: 20220831

Nokia Exhibit 2004, p. 264
Amazon.com v. Nokia
IPR2024-00605

Issue Classification	Application/Control No.	Applicant(s)/Patent Under Reexamination
	16/741,156	BICI et al.
	Examiner	**Art Unit**
	NATHNAEL AYNALEM	2488

INTERNATIONAL CLASSIFICATION				
CLAIMED				
H04N19/513	/	19	/	513
H04N19/52	/	19	/	52
H04N19/176	/	19	/	176
H04N19/182	/	19	/	182

NON-CLAIMED				
	/		/	

US ORIGINAL CLASSIFICATION	
CLASS	**SUBCLASS**

CROSS REFERENCES(S)						
CLASS	**SUBCLASS (ONE SUBCLASS PER BLOCK)**					

NONE (Assistant Examiner) (Date)		**Total Claims Allowed:** 34	
/NATHNAEL AYNALEM/ Primary Examiner, Art Unit 2488 (Primary Examiner) (Date)	31 August 2022	O.G. Print Claim(s) 1	O.G. Print Figure 1

Nokia Exhibit 2004, p. 265
Amazon.com v. Nokia
IPR2024-00605

Issue Classification	Application/Control No.	Applicant(s)/Patent Under Reexamination
	16/741,156	BICI et al.
	Examiner	**Art Unit**
	NATHNAEL AYNALEM	2488

☐ Claims renumbered in the same order as presented by applicant ☐ CPA ☑ T.D. ☐ R.1.47

CLAIMS

Final	Original	Final	Original	Final	Original	Final	Original	Final	Original	Final	Original	Final	Original	Final	Original
1	1	11	10	21	19	31	28	15	37						
2	2	12	11	22	20		29	16	38						
	3	13	12	23	21		30	17	39						
3	4	14	13		22	7	31	32	40						
4	5		14	27	23	8	32	33	41						
5	6	18	15		24	9	33	34	42						
6	7	19	16	28	25	24	34								
	8		17	29	26	25	35								
10	9	20	18	30	27	26	36								

NONE (Assistant Examiner)	(Date)	**Total Claims Allowed:** 34	
/NATHNAEL AYNALEM/ Primary Examiner, Art Unit 2488 (Primary Examiner)	31 August 2022 (Date)	O.G. Print Claim(s) 1	O.G. Print Figure 1

U.S. Patent and Trademark Office

Part of Paper No.: 20220831

Nokia Exhibit 2004, p. 266
Amazon.com v. Nokia
IPR2024-00605

Search Notes	Application/Control No.	Applicant(s)/Patent Under Reexamination
	16/741,156	BICI et al.
	Examiner	**Art Unit**
	NATHNAEL AYNALEM	2488

CPC - Searched*		
Symbol	**Date**	**Examiner**
H04N19/51 , H04N19/513 , H04N19/50 , H04N19/517 , H04N19/52 , H04N19/10 , H04N19/103 , H04N19/107 , H04N19/109 , H04N19/11 , H04N19/33 , H04N19/31 , H04N19/503 , H04N19/428 , H04N19/55 , H04N19/593 , H04N19/59	08/31/2022	NA

CPC Combination Sets - Searched*		
Symbol	**Date**	**Examiner**

US Classification - Searched*			
Class	**Subclass**	**Date**	**Examiner**
375	240.01-240.29	08/31/2022	NA

* See search history printout included with this form or the SEARCH NOTES box below to determine the scope of the search.

Search Notes		
Search Notes	**Date**	**Examiner**
Updated: Inventor's name search on PE2E, see attached	08/31/2022	NA
Updated: Assignee search on PE2E, see attached	08/31/2022	NA
Updated:The above CPC symbols and the US classification are further limited by a text search on PE2E search, see attached	08/31/2022	NA
NPL search on ip.com, see attached	02/23/2021	NA
NPL search from JCT-VC document management system	02/23/2021	NA

Nokia Exhibit 2004, p. 267
Amazon.com v. Nokia
IPR2024-00605

Search Notes	Application/Control No.	Applicant(s)/Patent Under Reexamination
	16/741,156	BICI et al.
	Examiner	**Art Unit**
	NATHNAEL AYNALEM	2488

Interference Search			
US Class/CPC Symbol	**US Subclass/CPC Group**	**Date**	**Examiner**
	Updated: Interference search of the claims (USPGPUB,USPAT)	08/31/2022	NA

Nokia Exhibit 2004, p. 268
Amazon.com v. Nokia
IPR2024-00605

Substitute for form SB08 (Revised 07/09)				Complete if Known	
INFORMATION DISCLOSURE STATEMENT BY APPLICANT *(Use as many sheets as necessary)*				Application Number	16/741,156
				Filing Date	January 13, 2020
				First Named Inventor	Bici et al.
				Art Unit	2488
				Examiner Name	Nathnael B. Aynalem
Sheet	1	of	1	Attorney Docket Number	042933/542643

U. S. PATENT DOCUMENTS

Examiner Initials*	Cite No.	Document Number Number – Kind Code (if known)	Publication Date MM-DD-YYYY	Name of Patentee or Applicant of Cited Document	Pages, Columns, Lines, Where Relevant Passages of Relevant Figures Appear
	1	US-5,122,875	06-16-1992	Raychaudhuri et al.	
	2	US-2006/0215762 A1	09-28-2006	Han et al.	

FOREIGN PATENT DOCUMENTS

Examiner Initials	Cite No.	Foreign Patent Document Country Code – Number Kind Code (if known)	Publication Date MM-DD-YYYY	Name of Patentee or Applicant of Cited Document	Pages, Columns, Lines, Where Relevant Passages or Relevant Figures Appear	English Language Translation Attached
	3	RU 2128405 C1	03-27-1999	Gen Electric		Abstract; corresponds to US-5,122,875
	4	RU 2341035 C1	12-10-2008	Samsung Electronics Co Ltd		Abstract; corresponds to US-2006/0215762 A1
	5	WO 2007/037912 A2	04-05-2007	Sony Electronics Inc.		

OTHER DOCUMENTS

Examiner Initials*	Cite No.	Include name of the author (in CAPITAL LETTERS), title of the article (when appropriate), title of the item (book, magazine, journal, serial, symposium, catalog, etc.), date, page(s) , volume-issue number(s), publisher, city and/or country where published.	English Language Translation Attached
	6	Decision to Grant for Russian Application No. 2014120207/12 dated September 9, 2015, 25 pages.	Yes
	7	Notice of Allowance for Taiwanese Application No. 101140777 dated April 1, 2016, 3 pages.	Yes

Examiner Signature	/NATHNAEL AYNALEM/	Date Considered	08/31/2022

*Examiner: Initial if reference considered, whether or not citation is in conformance with MPEP 609. Draw line through citation if not in conformance and not considered. Include copy of this form with next communication to applicant.

Submitted August 26, 2022

PE2E SEARCH - Search History (Prior Art)

Ref #	Hits	Search Query	DBs	Default Operator	Plurals	British Equivalents	Time Stamp
L529	274	((("BICI") near3 ("Mehmet")) OR (("LAINEMA") near3 ("Jani")) OR (("UGUR") near3 ("Kemal"))).INV.	(US-PGPUB; USPAT; USOCR; EPO; JPO; DERWENT)	OR	ON	ON	2022/08/31 04:23 PM
L530	3705	((("NOKIA") near3 ("TECHNOLOGIES") near3 ("OY"))).AS,AANM.	(USPAT)	OR	ON	ON	2022/08/31 04:23 PM
L531	167909	(compar$ OR comparision) WITH (motion OR mvp$2 OR mv OR amvp$2)	(US-PGPUB; USPAT; USOCR; EPO; JPO; DERWENT)	OR	ON	ON	2022/08/31 04:23 PM
L532	14972	(add$3 OR includ$3) WITH (motion OR mvp$2 OR mv OR amvp$2) WITH list$	(US-PGPUB; USPAT; USOCR; EPO; JPO; DERWENT)	OR	ON	ON	2022/08/31 04:23 PM
L533	14086	(select$ OR choos$ OR elect$ OR determin$) WITH (motion OR mvp$2 OR mv OR amvp$2) WITH list$	(US-PGPUB; USPAT; USOCR; EPO; JPO; DERWENT)	OR	ON	ON	2022/08/31 04:23 PM
L534	5378	154 AND 155	(US-PGPUB; USPAT; USOCR; EPO; JPO; DERWENT)	OR	ON	ON	2022/08/31 04:23 PM
L535	188778	((H04N19/51 OR H04N19/513 OR H04N19/50 OR H04N19/517 OR H04N19/52 OR H04N19/10 OR H04N19/103 OR H04N19/107 OR H04N19/109 OR H04N19/11 OR H04N19/33 OR H04N19/31 OR H04N19/503 OR H04N19/428 OR H04N19/55 OR H04N19/593 OR H04N19/59).cpc. OR (375/240.01-240.29).ccls.)	(US-PGPUB; USPAT; USOCR; FPRS; EPO; JPO; DERWENT; IBM_TDB)	OR	ON	ON	2022/08/31 04:23 PM
L536	3946	156 AND 157	(US-PGPUB; USPAT; USOCR)	OR	ON	ON	2022/08/31 04:23 PM
L537	2797	158 AND 160	(US-PGPUB; USPAT; USOCR)	OR	ON	ON	2022/08/31 04:23 PM
L538	41	152 AND 160	(US-PGPUB; USPAT; USOCR; EPO; JPO;	OR	ON	ON	2022/08/31 04:23 PM

			DERWENT)				
L539	81	153 AND 160	(US-PGPUB; USPAT; USOCR; EPO; JPO; DERWENT)	OR	ON	ON	2022/08/31 04:23 PM
L540	1486	(determin$5 OR calculat$3 OR judg$3 OR evaluat$3 OR decid$3 OR comput$3 OR estimat$3 OR deriv$3 OR deduc$3 OR analy$4 OR analz$5 OR quantify$3 OR quantification OR specify$3 OR infer$4 OR extrapolate$3 OR extract$3 OR measur$3 OR obtain$3 OR check$3 OR generat$ OR designat$) WITH (motion adj5 vector OR mvp$2 OR mv OR amvp$2) WITH (location OR position) WITH (subset OR set OR subgroup) WITH (block OR macroblock OR coding adj5 unit OR cu)	(US-PGPUB; USPAT; USOCR; EPO; JPO; DERWENT)	OR	ON	ON	2022/08/31 04:23 PM
L541	246	161 AND 167	(US-PGPUB; USPAT; USOCR)	OR	ON	ON	2022/08/31 04:23 PM
L542	56	(US-10091524-$ | US-11102479-$ | US-11109059-$ | US-11134245-$ | US-11159819-$ | US-20110194609-$ | US-20130107958-$ | US-20130128982-$ | US-20130188716-$ | US-20140092968-$ | US-20140269926-$ | US-20140294087-$ | US-20150078451-$ | US-20150131740-$ | US-20150222922-$ | US-20150271516-$ | US-20160191944-$ | US-20160219278-$ | US-20170310990-$ | US-20170339425-$ | US-20180176596-$ | US-20190268611-$ | US-20190342572-$ | US-20200092581-$ | US-20200137398-$ | US-20200162743-$ | US-20200221077-$ | US-	(US-PGPUB; USPAT; USOCR)	OR	ON	ON	2022/08/31 04:23 PM

		20200221097-$ | US-20200275093-$ | US-20200382771-$ | US-20200396476-$ | US-20210021825-$ | US-20210021858-$ | US-20210021861-$ | US-20210037238-$ | US-20210058628-$ | US-20210152843-$ | US-20210160528-$ | US-20210160532-$ | US-20210176472-$ | US-20210218955-$ | US-20210218980-$ | US-20210266586-$ | US-20210281847-$ | US-20210314602-$ | US-20210314604-$ | US-20210337232-$ | US-20210368201-$ | US-20210385483-$ | US-20210409686-$ | US-20210409723-$ | US-20210409754-$ | US-20220014780-$ | US-20220030268-$ | US-20220060739-$ | US-20220070445-$ | US-20220103826-$ | US-20220103854-$ | US-20220141452-$ | US-20220159265-$ | US-5428403-$).DID.					
L543	27	161 AND 169	(US-PGPUB; USPAT; USOCR; FPRS; EPO; JPO; DERWENT; IBM_TDB)	OR	ON	ON	2022/08/31 04:23 PM
L544	60399	(compar$3 OR comparison OR equat$ OR evaluat$ OR check$3 OR correlat$3 OR match$3) WITH (motion adj4 vector OR mvp$2 OR mv OR amvp$)	(US-PGPUB; USPAT; USOCR; EPO; JPO; DERWENT)	OR	ON	ON	2022/08/31 04:23 PM
L545	1592	155 SAME 172	(US-PGPUB; USPAT; USOCR; EPO; JPO; DERWENT)	OR	ON	ON	2022/08/31 04:23 PM
L546	199	167 AND 173	(US-PGPUB; USPAT; USOCR; EPO; JPO; DERWENT)	OR	ON	ON	2022/08/31 04:23 PM
L547	195	158 AND 174	(US-PGPUB; USPAT; USOCR; EPO; JPO; DERWENT)	OR	ON	ON	2022/08/31 04:23 PM

PE2E SEARCH - Search History (Interference)

Ref #	Hits	Search Query	DBs	Default Operator	Plurals	British Equivalents	Time Stamp
N17	212	((select$5 OR choos$3 OR pick$3 OR elect$3 OR decid$3 OR choice$1 OR chosen OR specify$3) WITH (motion adj5 vector OR mvp OR mv) WITH candidate$1 WITH (spatial$2 OR intra$)).clm.	(US-PGPUB; USPAT)	OR	ON	ON	2022/08/31 05:27 PM
N18	1461	((information OR flag OR index) WITH (motion adj5 vector OR mvp OR mv) WITH (signal$3 OR transmit$4 OR transmission OR send$3)).clm.	(US-PGPUB; USPAT)	OR	ON	ON	2022/08/31 05:27 PM
N19	33083	(("same" OR similar2 OR identical$2 OR compar$) WITH (motion OR mvp$2 OR mv)).clm.	(US-PGPUB; USPAT)	OR	ON	ON	2022/08/31 05:27 PM
N20	6585	((determin$3 OR check$3 OR decid$ OR decision) WITH (add$ OR includ$3 OR exclud$) WITH (candidate$1) WITH (list$3 OR set)).clm.	(US-PGPUB; USPAT)	OR	ON	ON	2022/08/31 05:27 PM
N21	42	N1 AND N2	(US-PGPUB; USPAT)	OR	ON	ON	2022/08/31 05:27 PM
N22	326	N3 AND N4	(US-PGPUB; USPAT)	OR	ON	ON	2022/08/31 05:27 PM
N23	10	N5 AND N6	(US-PGPUB; USPAT)	OR	ON	ON	2022/08/31 05:27 PM
N24	471	((select$5 OR choos$3 OR pick$3 OR elect$3 OR decid$3 OR choice$1 OR chosen OR specify$3 OR determin$) WITH (motion adj5 vector OR mvp OR mv) WITH candidate$1 WITH (spatial$2 OR intra$)).clm.	(US-PGPUB; USPAT)	OR	ON	ON	2022/08/31 05:27 PM
N26	2097	((location OR position) WITH (block OR macroblock) WITH	(US-PGPUB; USPAT)	OR	ON	ON	2022/08/31 05:27 PM

Nokia Exhibit 2004, p. 273
Amazon.com v. Nokia
IPR2024-00605

		(motion adj4 vector OR mv$ OR mvp$)).clm.					
N27	6585	((determin$3 OR check$3 OR decid$ OR decision) WITH (add$ OR includ$3 OR exclud$) WITH (candidate$1) WITH (list$3 OR set)).clm.	(US-PGPUB; USPAT)	OR	ON	ON	2022/08/31 05:27 PM
N28	913	((select$5 OR choos$3 OR pick$3 OR elect$3 OR decid$3 OR choice$1 OR chosen OR specify$3 OR determin$) WITH (motion adj5 vector OR mvp OR mv) WITH candidate$1 WITH list$).clm.	(US-PGPUB; USPAT)	OR	ON	ON	2022/08/31 05:27 PM
N29	4218	((motion adj4 compensat$) WITH predict$).clm.	(US-PGPUB; USPAT)	OR	ON	ON	2022/08/31 05:27 PM
N30	91	N8 AND N9 AND N10	(US-PGPUB; USPAT)	OR	ON	ON	2022/08/31 05:27 PM
N31	24	N14 AND N11 AND N12	(US-PGPUB; USPAT)	OR	ON	ON	2022/08/31 05:27 PM
N32	2	N13 AND N15	(US-PGPUB; USPAT)	OR	ON	ON	2022/08/31 05:27 PM
N33	34775	(("same" OR similar$2 OR identical$2 OR compar$) WITH (motion OR mvp$2 OR mv)).clm.	(US-PGPUB; USPAT)	OR	ON	ON	2022/08/31 05:29 PM
N34	150	N24 AND N26	(US-PGPUB; USPAT)	OR	ON	ON	2022/08/31 05:30 PM
N35	62	N27 AND n34	(US-PGPUB; USPAT)	OR	ON	ON	2022/08/31 05:31 PM
N36	3	N28 AND N29 AND N35	(US-PGPUB; USPAT)	OR	ON	ON	2022/08/31 05:32 PM
N37	35	N33 AND N35	(US-PGPUB; USPAT)	OR	ON	ON	2022/08/31 05:32 PM

PART B - FEE(S) TRANSMITTAL

Complete and send this form, together with applicable fee(s), by mail or fax, or via EFS-Web.

By mail, send to: Mail Stop ISSUE FEE
Commissioner for Patents
P.O. Box 1450
Alexandria, Virginia 22313-1450

By fax, send to: (571)-273-2885

INSTRUCTIONS: This form should be used for transmitting the ISSUE FEE and PUBLICATION FEE (if required). Blocks 1 through 5 should be completed where appropriate. All further correspondence including the Patent, advance orders and notification of maintenance fees will be mailed to the current correspondence address as indicated unless corrected below or directed otherwise in Block 1, by (a) specifying a new correspondence address; and/or (b) indicating a separate "FEE ADDRESS" for maintenance fee notifications.

CURRENT CORRESPONDENCE ADDRESS (Note: Use Block 1 for any change of address)

10949 7590 09/13/2022
Nokia Corporation and Alston & Bird LLP
c/o Alston & Bird LLP
One South at The Plaza, 101 South Tryon Street
Suite 4000
Charlotte, NC 28280-4000

Note: A certificate of mailing can only be used for domestic mailings of the Fee(s) Transmittal. This certificate cannot be used for any other accompanying papers. Each additional paper, such as an assignment or formal drawing, must have its own certificate of mailing or transmission.

Certificate of Mailing or Transmission

I hereby certify that this Fee(s) Transmittal is being deposited with the United States Postal Service with sufficient postage for first class mail in an envelope addressed to the Mail Stop ISSUE FEE address above, or being transmitted to the USPTO via EFS-Web or by facsimile to (571) 273-2885, on the date below.

Torrey L. Wyatt	(Typed or printed name)
/Torrey L. Wyatt/	(Signature)
December 13, 2022	(Date)

APPLICATION NO.	FILING DATE	FIRST NAMED INVENTOR	ATTORNEY DOCKET NO.	CONFIRMATION NO.
16/741,156	01/13/2020	Mehmet Oguz BICI	042933/542643	3751

TITLE OF INVENTION: METHOD FOR CODING AND AN APPARATUS

APPLN. TYPE	ENTITY STATUS	ISSUE FEE DUE	PUBLICATION FEE DUE	PREV. PAID ISSUE FEE	TOTAL FEE(S) DUE	DATE DUE
nonprovisional	UNDISCOUNTED	$1200	$0.00	$0.00	$1200	12/13/2022

EXAMINER	ART UNIT	CLASS-SUBCLASS
AYNALEM, NATHNAEL B	2488	375-240160

1. Change of correspondence address or indication of "Fee Address" (37 CFR 1.363).

☐ Change of correspondence address (or Change of Correspondence Address form PTO/AIA/122 or PTO/SB/122) attached.

☐ "Fee Address" indication (or "Fee Address" Indication form PTO/AIA/47 or PTO/SB/47; Rev 03-02 or more recent) attached. **Use of a Customer Number is required.**

2. For printing on the patent front page, list
(1) The names of up to 3 registered patent attorneys or agents OR, alternatively,
(2) The name of a single firm (having as a member a registered attorney or agent) and the names of up to 2 registered patent attorneys or agents. If no name is listed, no name will be printed.

1 ALSTON & BIRD LLP
2
3

3. ASSIGNEE NAME AND RESIDENCE DATA TO BE PRINTED ON THE PATENT (print or type)

PLEASE NOTE: Unless an assignee is identified below, no assignee data will appear on the patent. If an assignee is identified below, the document must have been previously recorded, or filed for recordation, as set forth in 37 CFR 3.11 and 37 CFR 3.81(a). Completion of this form is NOT a substitute for filing an assignment.

(A) NAME OF ASSIGNEE: NOKIA TECHNOLOGIES OY

(B) RESIDENCE: (CITY and STATE OR COUNTRY): ESPOO, FINLAND

Please check the appropriate assignee category or categories (will not be printed on the patent) : ☐ Individual ☒ Corporation or other private group entity ☐ Government

4a. Fees submitted: ☒ Issue Fee ☐ Publication Fee (if required) ☐ Advance Order - # of Copies _____

4b. Method of Payment: *(Please first reapply any previously paid fee shown above)*

☒ Electronic Payment via EFS-Web ☐ Enclosed check ☐ Non-electronic payment by credit card (Attach form PTO-2038)

☒ The Director is hereby authorized to charge the required fee(s), any deficiency, or credit any overpayment to Deposit Account No. 16-0605

5. **Change in Entity Status** (from status indicated above)

☐ Applicant certifying micro entity status. See 37 CFR 1.29

☐ Applicant asserting small entity status. See 37 CFR 1.27

☐ Applicant changing to regular undiscounted fee status.

NOTE: Absent a valid certification of Micro Entity Status (see forms PTO/SB/15A and 15B), issue fee payment in the micro entity amount will not be accepted at the risk of application abandonment.
NOTE: If the application was previously under micro entity status, checking this box will be taken to be a notification of loss of entitlement to micro entity status.
NOTE: Checking this box will be taken to be a notification of loss of entitlement to small or micro entity status, as applicable.

NOTE: This form must be signed in accordance with 37 CFR 1.31 and 1.33. See 37 CFR 1.4 for signature requirements and certifications.

Authorized Signature / Guy R. Gosnell / Date December 13, 2022

Typed or printed name Guy R. Gosnell Registration No. 34,610

Nokia Exhibit 2004, p. 275
Amazon.com v. Nokia
IPR2024-00605

Electronic Patent Application Fee Transmittal

Application Number:	16741156
Filing Date:	13-Jan-2020
Title of Invention:	METHOD FOR CODING AND AN APPARATUS
First Named Inventor/Applicant Name:	Mehmet Oguz BICI
Filer:	Guy Randall Gosnell/Torrey Wyatt
Attorney Docket Number:	042933/542643

Filed as Large Entity

Filing Fees for Utility under 35 USC 111(a)

Description	Fee Code	Quantity	Amount	Sub-Total in USD($)
Basic Filing:				
Pages:				
Claims:				
Miscellaneous-Filing:				
Petition:				
Patent-Appeals-and-Interference:				
Post-Allowance-and-Post-Issuance:				
UTILITY APPL ISSUE FEE	1501	1	1200	1200

Description	Fee Code	Quantity	Amount	Sub-Total in USD($)
Extension-of-Time:				
Miscellaneous:				
			Total in USD ($)	**1200**

Electronic Acknowledgement Receipt

EFS ID:	47197614
Application Number:	16741156
International Application Number:	
Confirmation Number:	3751
Title of Invention:	METHOD FOR CODING AND AN APPARATUS
First Named Inventor/Applicant Name:	Mehmet Oguz BICI
Customer Number:	10949
Filer:	Guy Randall Gosnell/Torrey Wyatt
Filer Authorized By:	Guy Randall Gosnell
Attorney Docket Number:	042933/542643
Receipt Date:	13-DEC-2022
Filing Date:	13-JAN-2020
Time Stamp:	14:37:04
Application Type:	Utility under 35 USC 111(a)

Payment information:

Submitted with Payment	yes
Payment Type	DA
Payment was successfully received in RAM	$1200
RAM confirmation Number	E2022BCE37222740
Deposit Account	
Authorized User	

The Director of the USPTO is hereby authorized to charge indicated fees and credit any overpayment as follows:

File Listing:

Document Number	Document Description	File Name	File Size(Bytes)/ Message Digest	Multi Part /.zip	Pages (if appl.)
1	Issue Fee Payment (PTO-85B)	542643_Issue_Fee_Transmittal.pdf	88554 dc84b7dede09bbb8149fc9dd8f3117a9d3732008	no	1
Warnings:					
Information:					
2	Fee Worksheet (SB06)	fee-info.pdf	37968 d54cc8bc49aa7c418ed0c96244107ee0d2f8a38f	no	2
Warnings:					
Information:					
		Total Files Size (in bytes):	126522		

This Acknowledgement Receipt evidences receipt on the noted date by the USPTO of the indicated documents, characterized by the applicant, and including page counts, where applicable. It serves as evidence of receipt similar to a Post Card, as described in MPEP 503.

New Applications Under 35 U.S.C. 111
If a new application is being filed and the application includes the necessary components for a filing date (see 37 CFR 1.53(b)-(d) and MPEP 506), a Filing Receipt (37 CFR 1.54) will be issued in due course and the date shown on this Acknowledgement Receipt will establish the filing date of the application.
National Stage of an International Application under 35 U.S.C. 371
If a timely submission to enter the national stage of an international application is compliant with the conditions of 35 U.S.C. 371 and other applicable requirements a Form PCT/DO/EO/903 indicating acceptance of the application as a national stage submission under 35 U.S.C. 371 will be issued in addition to the Filing Receipt, in due course.
New International Application Filed with the USPTO as a Receiving Office
If a new international application is being filed and the international application includes the necessary components for an international filing date (see PCT Article 11 and MPEP 1810), a Notification of the International Application Number and of the International Filing Date (Form PCT/RO/105) will be issued in due course, subject to prescriptions concerning national security, and the date shown on this Acknowledgement Receipt will establish the international filing date of the application.

DETAILED ACTION

Notice of Pre-AIA or AIA Status

This is in response to application no. 16/741,156 filed on January 13, 2020. The present application is being examined under the pre-AIA first to invent provisions.

EXAMINER'S AMENDMENT

An examiner's amendment to the record appears below. Should the changes and/or additions be unacceptable to applicant, an amendment may be filed as provided by 37 CFR 1.312. To ensure consideration of such an amendment, it MUST be submitted no later than the payment of the issue fee.

Authorization for this examiner's amendment was given in an interview with Guy Gosnell (Reg. No. 34610) on February 24, 2021.

Please amend claims 1, 9, 15, 23, 29 and 30 filed on January 13, 2020 as follows:

Claim 1 (lines 13-14) "determining to include or exclude the first spatial motion vector prediction ~~candiate~~ candidate in the motion vector prediction list based on the comparing"

Claim 9 (lines 11-12) "determining to include or exclude the first spatial motion vector prediction ~~candiate~~ candidate in the motion vector prediction list based on the comparing"

Change(s) applied to document, /P.M./ 3/15/2021

Claim 15 (lines ~~11-14~~ 15-18) "determine to include or exclude the first spatial motion vector prediction ~~candiate~~ candidate in the motion vector prediction list based on comparison of the

UNITED STATES PATENT AND TRADEMARK OFFICE

UNITED STATES DEPARTMENT OF COMMERCE
United States Patent and Trademark Office
Address: COMMISSIONER FOR PATENTS
P.O. Box 1450
Alexandria, Virginia 22313-1450
www.uspto.gov

APPLICATION NO.	FILING DATE	FIRST NAMED INVENTOR	ATTORNEY DOCKET NO.	CONFIRMATION NO.
16/741,156	01/13/2020	Mehmet Oguz BICI	042933/542643	3751

10949 7590 12/30/2022
Nokia Corporation and Alston & Bird LLP
c/o Alston & Bird LLP
One South at The Plaza, 101 South Tryon Street
Suite 4000
Charlotte, NC 28280-4000

EXAMINER
AYNALEM, NATHNAEL B

ART UNIT	PAPER NUMBER
2488	

NOTIFICATION DATE	DELIVERY MODE
12/30/2022	ELECTRONIC

Please find below and/or attached an Office communication concerning this application or proceeding.

The time period for reply, if any, is set in the attached communication.

Notice of the Office communication was sent electronically on above-indicated "Notification Date" to the following e-mail address(es):

usptomail@alston.com

Nokia Exhibit 2004, p. 281
Amazon.com v. Nokia
IPR2024-00605

Notice of Allowability	Application No. 16/741,156	Applicant(s) BICI et al.	
	Examiner NATHNAEL AYNALEM	Art Unit 2488	AIA (FITF) Status No

-- The MAILING DATE of this communication appears on the cover sheet with the correspondence address--

All claims being allowable, PROSECUTION ON THE MERITS IS (OR REMAINS) CLOSED in this application. If not included herewith (or previously mailed), a Notice of Allowance (PTOL-85) or other appropriate communication will be mailed in due course. **THIS NOTICE OF ALLOWABILITY IS NOT A GRANT OF PATENT RIGHTS.** This application is subject to withdrawal from issue at the initiative of the Office or upon petition by the applicant. See 37 CFR 1.313 and MPEP 1308.

1. ☑ This communication is responsive to amendment filed on 12/16/2022.
   ☐ A declaration(s)/affidavit(s) under **37 CFR 1.130(b)** was/were filed on _____.

2. ☐ An election was made by the applicant in response to a restriction requirement set forth during the interview on _____; the restriction requirement and election have been incorporated into this action.

3. ☑ The allowed claim(s) is/are 1-2,4-7,9,11-16,18-21,23 and 25-42 . As a result of the allowed claim(s), you may be eligible to benefit from the **Patent Prosecution Highway** program at a participating intellectual property office for the corresponding application. For more information, please see **http://www.uspto.gov/patents/init_events/pph/index.jsp** or send an inquiry to **PPHfeedback@uspto.gov.**

4. ☐ Acknowledgment is made of a claim for foreign priority under 35 U.S.C. § 119(a)-(d) or (f).

   Certified copies:

   a) ☐ All b) ☐ Some* c) ☐ None of the:

   1. ☐ Certified copies of the priority documents have been received.
   2. ☐ Certified copies of the priority documents have been received in Application No. _____ .
   3. ☐ Copies of the certified copies of the priority documents have been received in this national stage application from the International Bureau (PCT Rule 17.2(a)).

   * Certified copies not received: _____ .

Applicant has THREE MONTHS FROM THE "MAILING DATE" of this communication to file a reply complying with the requirements noted below. Failure to timely comply will result in ABANDONMENT of this application.
THIS THREE-MONTH PERIOD IS NOT EXTENDABLE.

5. ☐ CORRECTED DRAWINGS (as "replacement sheets") must be submitted.
   ☐ including changes required by the attached Examiner's Amendment / Comment or in the Office action of Paper No./Mail Date _____ .

   Identifying indicia such as the application number (see 37 CFR 1.84(c)) should be written on the drawings in the front (not the back) of each sheet. Replacement sheet(s) should be labeled as such in the header according to 37 CFR 1.121(d).

6. ☐ DEPOSIT OF and/or INFORMATION about the deposit of BIOLOGICAL MATERIAL must be submitted. Note the attached Examiner's comment regarding REQUIREMENT FOR THE DEPOSIT OF BIOLOGICAL MATERIAL.

Attachment(s)

1. ☐ Notice of References Cited (PTO-892)
2. ☐ Information Disclosure Statements (PTO/SB/08), Paper No./Mail Date _____.
3. ☐ Examiner's Comment Regarding Requirement for Deposit of Biological Material _____.
4. ☐ Interview Summary (PTO-413), Paper No./Mail Date. _____.
5. ☐ Examiner's Amendment/Comment
6. ☐ Examiner's Statement of Reasons for Allowance
7. ☑ Other PTO-271.

/NATHNAEL AYNALEM/
Primary Examiner, Art Unit 2488

Nokia Exhibit 2004, p. 282
Amazon.com v. Nokia
IPR2024-00605

Response to Rule 312 Communication	Application No.	Applicant(s)	
	16/741,156	BICI et al.	
	Examiner	**Art Unit**	**AIA (FITF) Status**
	NATHNAEL AYNALEM	2488	No

-- The MAILING DATE of this communication appears on the cover sheet with the correspondence address --

1. ☑ The amendment filed on 16 December 2022 under 37 CFR 1.312 has been considered, and has been:

a) ☑ entered.

b) ☐ entered as directed to matters of form not affecting the scope of the invention.

c) ☐ disapproved because the amendment was filed after the payment of the issue fee.

Any amendment filed after the date the issue fee is paid must be accompanied by a petition under 37 CFR 1.313(c)(1) and the required fee to withdraw the application from issue.

d) ☐ disapproved. See explanation below.

e) ☐ entered in part. See explanation below.

f) ☐ not entered because the supplemental or corrected Application Data sheet (ADS)

☐ was not accompanied by a petition to accept an unintentionally delayed claim under 37 CFR 1.55 or 27 CFR 1.78;

☐ did not identify the information being changed in accordance with 37 CFR 1.76(c)(2);

☐ was not properly signed in accordance with 37 CFR 1.76(e) (or 37 CFR 1.33(b) for applications filed prior to September 16, 2012).

/NATHNAEL AYNALEM/
Primary Examiner, Art Unit 2488

Nokia Exhibit 2004, p. 283
Amazon.com v. Nokia
IPR2024-00605

Issue Classification	Application/Control No.	Applicant(s)/Patent Under Reexamination
	16/741,156	BICI et al.
	Examiner	**Art Unit**
	NATHNAEL AYNALEM	2488

CPC						
Symbol					**Type**	**Version**
H04N	/	19	/	521	F	2014-11-01
H04N	/	19	/	52	I	2014-11-01
H04N	/	19	/	176	A	2014-11-01
H04N	/	19	/	182	A	2014-11-01

CPC Combination Sets								
Symbol					**Type**	**Set**	**Ranking**	**Version**
	/		/					

NONE (Assistant Examiner)	(Date)	**Total Claims Allowed:** 36	
/NATHNAEL AYNALEM/ Primary Examiner, Art Unit 2488 (Primary Examiner)	22 December 2022 (Date)	O.G. Print Claim(s) 1	O.G. Print Figure 1

U.S. Patent and Trademark Office

Part of Paper No.: 20221222

Nokia Exhibit 2004, p. 284
Amazon.com v. Nokia
IPR2024-00605

Issue Classification	Application/Control No.	Applicant(s)/Patent Under Reexamination
	16/741,156	BICI et al.
	Examiner	**Art Unit**
	NATHNAEL AYNALEM	2488

INTERNATIONAL CLASSIFICATION				
CLAIMED				
H04N19/513	/	19	/	513
H04N19/52	/	19	/	52
H04N19/176	/	19	/	176
H04N19/182	/	19	/	182

NON-CLAIMED				
	/		/	

US ORIGINAL CLASSIFICATION	
CLASS	**SUBCLASS**

CROSS REFERENCES(S)						
CLASS	**SUBCLASS (ONE SUBCLASS PER BLOCK)**					

NONE (Assistant Examiner) (Date)		**Total Claims Allowed:** 36	
/NATHNAEL AYNALEM/ Primary Examiner, Art Unit 2488 (Primary Examiner)	22 December 2022 (Date)	O.G. Print Claim(s) 1	O.G. Print Figure 1

U.S. Patent and Trademark Office

Part of Paper No.: 20221222

Nokia Exhibit 2004, p. 285
Amazon.com v. Nokia
IPR2024-00605

Issue Classification	Application/Control No.	Applicant(s)/Patent Under Reexamination
	16/741,156	BICI et al.
	Examiner	**Art Unit**
	NATHNAEL AYNALEM	2488

☐ Claims renumbered in the same order as presented by applicant ☐ CPA ☑ T.D. ☐ R.1.47

CLAIMS

Final	Original	Final	Original	Final	Original	Final	Original	Final	Original	Final	Original	Final	Original	Final	Original
1	1		10	21	19	31	28	15	37						
2	2	11	11	22	20	35	29	16	38						
	3	12	12	23	21	36	30	17	39						
3	4	13	13		22	7	31	32	40						
4	5	14	14	27	23	8	32	33	41						
5	6	18	15		24	9	33	34	42						
6	7	19	16	28	25	24	34								
	8		17	29	26	25	35								
10	9	20	18	30	27	26	36								

NONE (Assistant Examiner)	(Date)	**Total Claims Allowed:** 36	
/NATHNAEL AYNALEM/ Primary Examiner, Art Unit 2488 (Primary Examiner)	22 December 2022 (Date)	O.G. Print Claim(s) 1	O.G. Print Figure 1

U.S. Patent and Trademark Office

Part of Paper No.: 20221222

Nokia Exhibit 2004, p. 286
Amazon.com v. Nokia
IPR2024-00605

UNITED STATES PATENT AND TRADEMARK OFFICE

UNITED STATES DEPARTMENT OF COMMERCE
United States Patent and Trademark Office
Address: COMMISSIONER FOR PATENTS
P.O. Box 1450
Alexandria, Virginia 22313-1450
www.uspto.gov

APPLICATION NO.	ISSUE DATE	PATENT NO.	ATTORNEY DOCKET NO.	CONFIRMATION NO.
16/741,156	01/31/2023	11570467	042933/542643	3751

10949 7590 01/11/2023

Nokia Corporation and Alston & Bird LLP
c/o Alston & Bird LLP
One South at The Plaza, 101 South Tryon Street
Suite 4000
Charlotte, NC 28280-4000

ISSUE NOTIFICATION

The projected patent number and issue date are specified above.

Determination of Patent Term Adjustment under 35 U.S.C. 154 (b)
(application filed on or after May 29, 2000)

The Patent Term Adjustment is 0 day(s). Any patent to issue from the above-identified application will include an indication of the adjustment on the front page.

If a Continued Prosecution Application (CPA) was filed in the above-identified application, the filing date that determines Patent Term Adjustment is the filing date of the most recent CPA.

Applicant will be able to obtain more detailed information by accessing the Patent Application Information Retrieval (PAIR) WEB site (http://pair.uspto.gov).

Any questions regarding the Patent Term Extension or Adjustment determination should be directed to the Office of Patent Legal Administration at (571)-272-7702. Questions relating to issue and publication fee payments should be directed to the Application Assistance Unit (AAU) of the Office of Patents Stakeholder Experience (OPSE), Stakeholder Support Division (SSD) at (571)-272-4200.

INVENTOR(s) (Please see PAIR WEB site http://pair.uspto.gov for additional inventors):

Mehmet Oguz BICI, Tampere, FINLAND;
Jani LAINEMA, Tampere, FINLAND;
Kemal UGUR, Tampere, FINLAND;

APPLICANT(s) (Please see PAIR WEB site http://pair.uspto.gov for additional applicants):

NOKIA TECHNOLOGIES OY, Espoo, FINLAND;

The United States represents the largest, most dynamic marketplace in the world and is an unparalleled location for business investment, innovation, and commercialization of new technologies. The USA offers tremendous resources and advantages for those who invest and manufacture goods here. Through SelectUSA, our nation works to encourage and facilitate business investment. To learn more about why the USA is the best country in the world to develop technology, manufacture products, and grow your business, visit SelectUSA.gov.

Nokia Exhibit 2004, p. 287
Amazon.com v. Nokia
IPR2024-00605

UNITED STATES
PATENT AND TRADEMARK OFFICE

P.O. Box 1450
Alexandria, Virginia 22313-1450
www.uspto.gov

FEE ADDRESS CHANGE

APPLICATION #	FILING OR 371(C) DATE	REQUEST ID
16/741,156	01/13/2020	75893

The following fields have been changed to Customer Number 197 on 04/14/2023 via Patent Center in view of the certification copied below that authorized the change.

- Maintenance Fee Address

The address for Customer Number 197 is:

197 - CPA GLOBAL
Clarivate
3133 W. Frye Rd.
STE 400
Chandler, AZ 85226

I certify, in accordance with 37 CFR 1.4(d)(4), that I am :

An attorney or Agent of Record registered to practice before the Patent and Trademark Office who has been given power of attorney in this application

Signature	**Name**	**Registration #**
/Guy R. Gosnell/	Guy Gosnell	34610

UNITED STATES
PATENT AND TRADEMARK OFFICE

P.O. Box 1450
Alexandria, VA 22313 - 1450
www.uspto.gov

ELECTRONIC ACKNOWLEDGEMENT RECEIPT

APPLICATION #	RECEIPT DATE / TIME	ATTORNEY DOCKET #
16/741,156	**07/31/2023 11:25:48 AM ET**	**042933/542643**

Title of Invention

METHOD FOR CODING AND AN APPARATUS

Application Information

APPLICATION TYPE	Utility - Nonprovisional Application under 35 USC 111(a)	PATENT #	11570467
CONFIRMATION #	3751	FILED BY	Philip Tyson
PATENT CENTER #	62530653	FILING DATE	01/13/2020
CUSTOMER #	10949	FIRST NAMED INVENTOR	Mehmet Oguz BICI
CORRESPONDENCE ADDRESS	-	AUTHORIZED BY	Guy Gosnell

Documents

TOTAL DOCUMENTS: 1

DOCUMENT	PAGES	DESCRIPTION	SIZE (KB)
542643_Request_for_CoC.pdf	3	Request for Certificate of Correction	468 KB

Digest

DOCUMENT	MESSAGE DIGEST(SHA-512)
542643_Request_for_CoC.pdf	B0864D92F85A1D70A389D10E2ACFC1F9C9F5DAF3A59563B2A0DA9BF451E15FED18030BF4C98F6F64E5AD668E110696841DEE11B4038C496ED469C837AF4C14B7

This Acknowledgement Receipt evidences receipt on the noted date by the USPTO of the indicated documents, characterized

Nokia Exhibit 2004, p. 289
Amazon.com v. Nokia
IPR2024-00605

by the applicant, and including page counts, where applicable. It serves as evidence of receipt similar to a Post Card, as described in MPEP 503.

New Applications Under 35 U.S.C. 111

If a new application is being filed and the application includes the necessary components for filing date (see 37 CFR 1.53(b)-(d) and MPEP 506), a Filing Receipt (37 CFR 1.54) will be issued in due course and the date shown on this Acknowledgement Receipt will establish the filing date of the application

National Stage of an International Application under 35 U.S.C. 371

If a timely submission to enter the national stage of an international application is compliant with the conditions of 35 U.S.C. 371 and other applicable requirements a Form PCT/DO/EO/903 indicating acceptance of the application as a national stage submission under 35 U.S.C. 371 will be issued in addition to the Filing Receipt, in due course.

New International Application Filed with the USPTO as a Receiving Office

If a new international application is being filed and the international application includes the necessary components for an international filing date (see PCT Article 11 and MPEP 1810), a Notification of the International Application Number and of the International Filing Date (Form PCT/RO/105) will be issued in due course, subject to prescriptions concerning national security, and the date shown on this Acknowledgement Receipt will establish the international filing date of the application.

UNITED STATES
PATENT AND TRADEMARK OFFICE

P.O. Box 1450
Alexandria, VA 22313 - 1450
www.uspto.gov

ELECTRONIC PAYMENT RECEIPT

APPLICATION #	RECEIPT DATE / TIME	ATTORNEY DOCKET #
16/741,156	**07/31/2023 11:25:48 AM ET**	**042933/542643**

Title of Invention

METHOD FOR CODING AND AN APPARATUS

Application Information

APPLICATION TYPE	Utility - Nonprovisional Application under 35 USC 111(a)	PATENT #	11570467
CONFIRMATION #	3751	FILED BY	Philip Tyson
PATENT CENTER #	62530653	AUTHORIZED BY	Guy Gosnell
CUSTOMER #	10949	FILING DATE	01/13/2020
CORRESPONDENCE ADDRESS	-	FIRST NAMED INVENTOR	Mehmet Oguz BICI

Payment Information

PAYMENT METHOD	PAYMENT TRANSACTION ID	PAYMENT AUTHORIZED BY
DA / 160605	**E20237UB26058222**	**Philip Tyson**

FEE CODE	DESCRIPTION	ITEM PRICE($)	QUANTITY	ITEM TOTAL($)
1811	CERTIFICATE OF CORRECTION	160.00	1	160.00
			TOTAL AMOUNT:	**$160.00**

This Acknowledgement Receipt evidences receipt on the noted date by the USPTO of the indicated documents, characterized by the applicant, and including page counts, where applicable. It serves as evidence of receipt similar to a Post Card, as described in MPEP 503.

New Applications Under 35 U.S.C. 111

If a new application is being filed and the application includes the necessary components for filing date (see 37 CFR 1.53(b)-(d) and MPEP 506), a Filing Receipt (37 CFR 1.54) will be issued in due course and the date shown on this Acknowledgement Receipt will establish the filing date of the application

National Stage of an International Application under 35 U.S.C. 371

If a timely submission to enter the national stage of an international application is compliant with the conditions of 35 U.S.C. 371 and other applicable requirements a Form PCT/DO/EO/903 indicating acceptance of the application as a national stage submission under 35 U.S.C. 371 will be issued in addition to the Filing Receipt, in due course.

New International Application Filed with the USPTO as a Receiving Office

If a new international application is being filed and the international application includes the necessary components for an international filing date (see PCT Article 11 and MPEP 1810), a Notification of the International Application Number and of the International Filing Date (Form PCT/RO/105) will be issued in due course, subject to prescriptions concerning national security, and the date shown on this Acknowledgement Receipt will establish the international filing date of the application.

Attorney's Docket No. 042933/542643 PATENT

IN THE UNITED STATES PATENT AND TRADEMARK OFFICE

In re: Mehmet Bici et al.
Appl. No.: 16/741,156
Filed: January 13, 2020
Title: METHOD FOR CODING AND AN APPARATUS

Confirmation No. 3751
Patent No.: 11,570,467
Issue Date: January 31, 2023

Certificate of Correction Branch
Commissioner for Patents
P.O. Box 1450
Alexandria, VA 22313-1450

REQUEST FOR CERTIFICATE OF CORRECTION

It is respectfully requested that a Certificate of Correction be issued for the above-identified patent, in accordance with 37 C.F.R. §1.322 and 37 C.F.R. §1.323. This request is made in order to correct mistakes incurred through the fault of the United States Patent and Trademark Office and the Applicant.

The mistakes appearing in the patent are set forth on the Certificate of Correction e-filed herewith. The Certificate of Correction fee is being paid concurrently herewith. The undersigned authorizes any fee deficiencies to be charged to Deposit Account No. 16-0605.

Respectfully submitted,

/Guy R. Gosnell/

Guy R. Gosnell
Registration No. 34,610

ALSTON & BIRD LLP
Vantage South End
1120 South Tryon Street, Suite 300
Charlotte, NC 28203-6818
Tel Charlotte Office (704) 444-1000
Fax Charlotte Office (704) 444-1111

LEGAL02/43008197v1

PTO/SB/44 (09-07)
Approved for use through 03/31/2023. OMB 0651-0033
U.S. Patent and Trademark Office; U.S. DEPARTMENT OF COMMERCE
Under the Paperwork Reduction Act of 1995, no persons are required to respond to a collection of information unless it displays a valid OMB control number.
(Also Form PTO-1050)

UNITED STATES PATENT AND TRADEMARK OFFICE
CERTIFICATE OF CORRECTION

PATENT NO. : 11,570,467

APPLICATION NO. : 16/741,156

ISSUE DATE : January 31, 2023

INVENTOR(S) : Mehmet Bici et al.

It is certified that an error appears or errors appear in the above-identified patent and that said Letters Patent is hereby corrected as shown below:

In column 34, lines 11-12, claim 13, delete “block pixels,” and insert -- block of pixels, --, therefor.

In column 35, line 58, claim 18, delete “block pixels;” and insert -- block of pixels; --, therefor.

In column 36, line 17, claim 22, delete “to:” and insert -- to --, therefor.

In column 39, line 28, claim 32, delete “B1” and insert -- B0 --, therefor.

In column 40, line 23, claim 35, delete “bock” and insert -- block --, therefor.

In sheet 6 of 13, FIG. 5b, delete “ 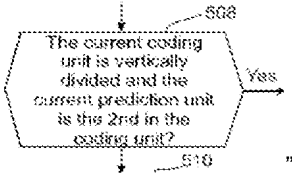

” and insert -- 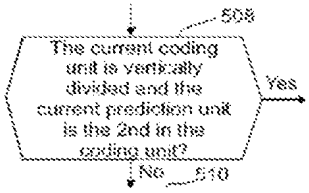

--, therefor.

In sheet 10 of 13, FIG. 8b, delete “ 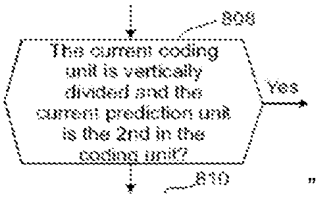

” and insert -- 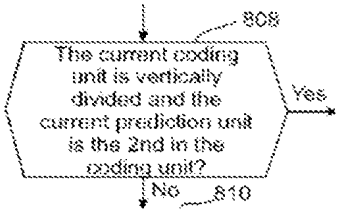

--, therefor.

MAILING ADDRESS OF SENDER (Please do not use Customer Number below):

ALSTON & BIRD LLP
Vantage South End
1120 South Tryon Street, Suite 300
Charlotte, NC 28203-6818

LEGAL02/43008188v1

Tel Charlotte Office (704)444-1000

This collection of information is required by 37 CFR 1.322, 1.323, and 1.324. The information is required to obtain or retain a benefit by the public which is to file (and by the USPTO to process) an application. Confidentiality is governed by 35 U.S.C. 122 and 37 CFR 1.14. This collection is estimated to take 1.0 hour to complete, including gathering, preparing, and submitting the completed application form to the USPTO. Time will vary depending upon the individual case. Any comments on the amount of time you require to complete this form and/or suggestions for reducing this burden, should be sent to the Chief Information Officer, U.S. Patent and Trademark Office, U.S. Department of Commerce, P.O. Box 1450, Alexandria, VA 22313-1450. DO NOT SEND FEES OR COMPLETED FORMS TO THIS ADDRESS. **SEND TO: Attention Certificate of Corrections Branch, Commissioner for Patents, P.O. Box 1450, Alexandria, VA 22313-1450.**

If you need assistance in completing the form, call 1-800-PTO-9199 and select option 2.

Privacy Act Statement

The **Privacy Act of 1974 (P.L. 93-579)** requires that you be given certain information in connection with your submission of the attached form related to a patent application or patent. Accordingly, pursuant to the requirements of the Act, please be advised that: (1) the general authority for the collection of this information is 35 U.S.C. 2(b)(2); (2) furnishing of the information solicited is voluntary; and (3) the principal purpose for which the information is used by the U.S. Patent and Trademark Office is to process and/or examine your submission related to a patent application or patent. If you do not furnish the requested information, the U.S. Patent and Trademark Office may not be able to process and/or examine your submission, which may result in termination of proceedings or abandonment of the application or expiration of the patent.

The information provided by you in this form will be subject to the following routine uses:

1. The information on this form will be treated confidentially to the extent allowed under the Freedom of Information Act (5 U.S.C. 552) and the Privacy Act (5 U.S.C 552a). Records from this system of records may be disclosed to the Department of Justice to determine whether disclosure of these records is required by the Freedom of Information Act.
2. A record from this system of records may be disclosed, as a routine use, in the course of presenting evidence to a court, magistrate, or administrative tribunal, including disclosures to opposing counsel in the course of settlement negotiations.
3. A record in this system of records may be disclosed, as a routine use, to a Member of Congress submitting a request involving an individual, to whom the record pertains, when the individual has requested assistance from the Member with respect to the subject matter of the record.
4. A record in this system of records may be disclosed, as a routine use, to a contractor of the Agency having need for the information in order to perform a contract. Recipients of information shall be required to comply with the requirements of the Privacy Act of 1974, as amended, pursuant to 5 U.S.C. 552a(m).
5. A record related to an International Application filed under the Patent Cooperation Treaty in this system of records may be disclosed, as a routine use, to the International Bureau of the World Intellectual Property Organization, pursuant to the Patent Cooperation Treaty.
6. A record in this system of records may be disclosed, as a routine use, to another federal agency for purposes of National Security review (35 U.S.C. 181) and for review pursuant to the Atomic Energy Act (42 U.S.C. 218(c)).
7. A record from this system of records may be disclosed, as a routine use, to the Administrator, General Services, or his/her designee, during an inspection of records conducted by GSA as part of that agency's responsibility to recommend improvements in records management practices and programs, under authority of 44 U.S.C. 2904 and 2906. Such disclosure shall be made in accordance with the GSA regulations governing inspection of records for this purpose, and any other relevant (*i.e.*, GSA or Commerce) directive. Such disclosure shall not be used to make determinations about individuals.
8. A record from this system of records may be disclosed, as a routine use, to the public after either publication of the application pursuant to 35 U.S.C. 122(b) or issuance of a patent pursuant to 35 U.S.C. 151. Further, a record may be disclosed, subject to the limitations of 37 CFR 1.14, as a routine use, to the public if the record was filed in an application which became abandoned or in which the proceedings were terminated and which application is referenced by either a published application, an application open to public inspection or an issued patent.
9. A record from this system of records may be disclosed, as a routine use, to a Federal, State, or local law enforcement agency, if the USPTO becomes aware of a violation or potential violation of law or regulation.

Nokia Exhibit 2004, p. 295
Amazon.com v. Nokia
IPR2024-00605

UNITED STATES PATENT AND TRADEMARK OFFICE

CERTIFICATE OF CORRECTION

PATENT NO. : 11,570,467 B2
APPLICATION NO. : 16/741156
DATED : January 31, 2023
INVENTOR(S) : Mehmet Bici et al.

It is certified that error appears in the above-identified patent and that said Letters Patent is hereby corrected as shown below:

In the Drawings

In sheet 6 of 13, FIG. 5b, delete “ 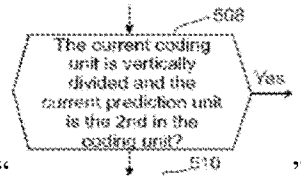

” and insert -- 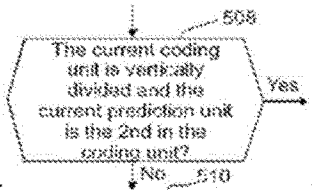

--, therefor.

In sheet 10 of 13, FIG. 8b, delete “ 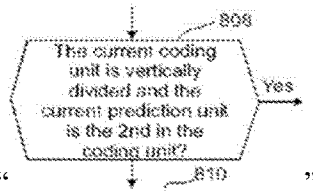

” and insert -- 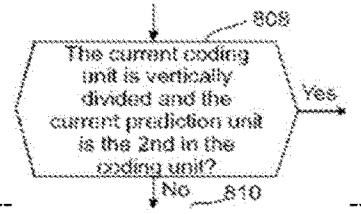

--, therefor.

In the Claims

In Column 34, Lines 11-12, Claim 13, delete “block pixels,” and insert -- block of pixels, --, therefor.

In Column 35, Line 58, Claim 18, delete “block pixels,” and insert -- block of pixels; --, therefor.

In Column 36, Line 17, Claim 22, delete “to:” and insert -- to --, therefor.

Signed and Sealed this
Twenty-ninth Day of August, 2023

Katherine Kelly Vidal

Katherine Kelly Vidal
Director of the United States Patent and Trademark Office

In Column 39, Line 28, Claim 32, delete “B1” and insert -- B0 --, therefor.

In Column 40, Line 23, Claim 35, delete “bock” and insert -- block --, therefor.