Overview of the High Efficiency Video Coding (HEVC) Standard

Gary J. Sullivan, *Fellow, IEEE,* Jens-Rainer Ohm, *Member, IEEE,* Woo-Jin Han, *Member, IEEE,* and Thomas Wiegand, *Fellow, IEEE*

***Abstract*—High Efficiency Video Coding (HEVC) is currently being prepared as the newest video coding standard of the ITU-T Video Coding Experts Group and the ISO/IEC Moving Picture Experts Group. The main goal of the HEVC standardization effort is to enable significantly improved compression performance relative to existing standards—in the range of 50% bit-rate reduction for equal perceptual video quality. This paper provides an overview of the technical features and characteristics of the HEVC standard.**

***Index Terms*—Advanced video coding (AVC), H.264, High Efficiency Video Coding (HEVC), Joint Collaborative Team on Video Coding (JCT-VC), Moving Picture Experts Group (MPEG), MPEG-4, standards, Video Coding Experts Group (VCEG), video compression.**

I. Introduction

THE High Efficiency Video Coding (HEVC) standard is the most recent joint video project of the ITU-T Video Coding Experts Group (VCEG) and the ISO/IEC Moving Picture Experts Group (MPEG) standardization organizations, working together in a partnership known as the Joint Collaborative Team on Video Coding (JCT-VC) [1]. The first edition of the HEVC standard is expected to be finalized in January 2013, resulting in an aligned text that will be published by both ITU-T and ISO/IEC. Additional work is planned to extend the standard to support several additional application scenarios, including extended-range uses with enhanced precision and color format support, scalable video coding, and 3-D/stereo/multiview video coding. In ISO/IEC, the HEVC standard will become MPEG-H Part 2 (ISO/IEC 23008-2) and in ITU-T it is likely to become ITU-T Recommendation H.265.

Manuscript received May 25, 2012; revised August 22, 2012; accepted August 24, 2012. Date of publication October 2, 2012; date of current version January 8, 2013. This paper was recommended by Associate Editor H. Gharavi. (*Corresponding author: W.-J. Han.*)

G. J. Sullivan is with Microsoft Corporation, Redmond, WA 98052 USA (e-mail: garysull@microsoft.com).

J.-R. Ohm is with the Institute of Communication Engineering, RWTH Aachen University, Aachen 52056, Germany (e-mail: ohm@ient.rwth-aachen.de).

W.-J. Han is with the Department of Software Design and Management, Gachon University, Seongnam 461-701, Korea (e-mail: hurumi@gmail.com).

T. Wiegand is with the Fraunhofer Institute for Telecommunications, Heinrich Hertz Institute, Berlin 10587, Germany, and also with the Berlin Institute of Technology, Berlin 10587, Germany (e-mail: twiegand@ieee.org).

Color versions of one or more of the figures in this paper are available online at http://ieeexplore.ieee.org.

Digital Object Identifier 10.1109/TCSVT.2012.2221191

Video coding standards have evolved primarily through the development of the well-known ITU-T and ISO/IEC standards. The ITU-T produced H.261 [2] and H.263 [3], ISO/IEC produced MPEG-1 [4] and MPEG-4 Visual [5], and the two organizations jointly produced the H.262/MPEG-2 Video [6] and H.264/MPEG-4 Advanced Video Coding (AVC) [7] standards. The two standards that were jointly produced have had a particularly strong impact and have found their way into a wide variety of products that are increasingly prevalent in our daily lives. Throughout this evolution, continued efforts have been made to maximize compression capability and improve other characteristics such as data loss robustness, while considering the computational resources that were practical for use in products at the time of anticipated deployment of each standard.

The major video coding standard directly preceding the HEVC project was H.264/MPEG-4 AVC, which was initially developed in the period between 1999 and 2003, and then was extended in several important ways from 2003–2009. H.264/MPEG-4 AVC has been an enabling technology for digital video in almost every area that was not previously covered by H.262/MPEG-2 Video and has substantially displaced the older standard within its existing application domains. It is widely used for many applications, including broadcast of high definition (HD) TV signals over satellite, cable, and terrestrial transmission systems, video content acquisition and editing systems, camcorders, security applications, Internet and mobile network video, Blu-ray Discs, and real-time conversational applications such as video chat, video conferencing, and telepresence systems.

However, an increasing diversity of services, the growing popularity of HD video, and the emergence of beyond-HD formats (e.g., 4k×2k or 8k×4k resolution) are creating even stronger needs for coding efficiency superior to H.264/MPEG-4 AVC's capabilities. The need is even stronger when higher resolution is accompanied by stereo or multiview capture and display. Moreover, the traffic caused by video applications targeting mobile devices and tablet PCs, as well as the transmission needs for video-on-demand services, are imposing severe challenges on today's networks. An increased desire for higher quality and resolutions is also arising in mobile applications.

HEVC has been designed to address essentially all existing applications of H.264/MPEG-4 AVC and to particularly focus on two key issues: increased video resolution and increased use of parallel processing architectures. The syntax of HEVC

1051-8215/$31.00 © 2012 IEEE

Nokia Exhibit 2012, p. 1
Amazon.com v. Nokia
IPR2024-00605

is generic and should also be generally suited for other applications that are not specifically mentioned above.

As has been the case for all past ITU-T and ISO/IEC video coding standards, in HEVC only the bitstream structure and syntax is standardized, as well as constraints on the bitstream and its mapping for the generation of decoded pictures. The mapping is given by defining the semantic meaning of syntax elements and a decoding process such that every decoder conforming to the standard will produce the same output when given a bitstream that conforms to the constraints of the standard. This limitation of the scope of the standard permits maximal freedom to optimize implementations in a manner appropriate to specific applications (balancing compression quality, implementation cost, time to market, and other considerations). However, it provides no guarantees of end-to-end reproduction quality, as it allows even crude encoding techniques to be considered conforming.

To assist the industry community in learning how to use the standard, the standardization effort not only includes the development of a text specification document, but also reference software source code as an example of how HEVC video can be encoded and decoded. The draft reference software has been used as a research tool for the internal work of the committee during the design of the standard, and can also be used as a general research tool and as the basis of products. A standard test data suite is also being developed for testing conformance to the standard.

This paper is organized as follows. Section II highlights some key features of the HEVC coding design. Section III explains the high-level syntax and the overall structure of HEVC coded data. The HEVC coding technology is then described in greater detail in Section IV. Section V explains the profile, tier, and level design of HEVC. Since writing an overview of a technology as substantial as HEVC involves a significant amount of summarization, the reader is referred to [1] for any omitted details. The history of the HEVC standardization effort is discussed in Section VI.

II. HEVC Coding Design and Feature Highlights

The HEVC standard is designed to achieve multiple goals, including coding efficiency, ease of transport system integration and data loss resilience, as well as implementability using parallel processing architectures. The following subsections briefly describe the key elements of the design by which these goals are achieved, and the typical encoder operation that would generate a valid bitstream. More details about the associated syntax and the decoding process of the different elements are provided in Sections III and IV.

A. Video Coding Layer

The video coding layer of HEVC employs the same hybrid approach (inter-/intrapicture prediction and 2-D transform coding) used in all video compression standards since H.261. Fig. 1 depicts the block diagram of a hybrid video encoder, which could create a bitstream conforming to the HEVC standard.

An encoding algorithm producing an HEVC compliant bitstream would typically proceed as follows. Each picture is split into block-shaped regions, with the exact block partitioning being conveyed to the decoder. The first picture of a video sequence (and the first picture at each clean random access point into a video sequence) is coded using only intrapicture prediction (that uses some prediction of data spatially from region-to-region within the same picture, but has no dependence on other pictures). For all remaining pictures of a sequence or between random access points, interpicture temporally predictive coding modes are typically used for most blocks. The encoding process for interpicture prediction consists of choosing motion data comprising the selected reference picture and motion vector (MV) to be applied for predicting the samples of each block. The encoder and decoder generate identical interpicture prediction signals by applying motion compensation (MC) using the MV and mode decision data, which are transmitted as side information.

The residual signal of the intra- or interpicture prediction, which is the difference between the original block and its prediction, is transformed by a linear spatial transform. The transform coefficients are then scaled, quantized, entropy coded, and transmitted together with the prediction information.

The encoder duplicates the decoder processing loop (see gray-shaded boxes in Fig. 1) such that both will generate identical predictions for subsequent data. Therefore, the quantized transform coefficients are constructed by inverse scaling and are then inverse transformed to duplicate the decoded approximation of the residual signal. The residual is then added to the prediction, and the result of that addition may then be fed into one or two loop filters to smooth out artifacts induced by block-wise processing and quantization. The final picture representation (that is a duplicate of the output of the decoder) is stored in a decoded picture buffer to be used for the prediction of subsequent pictures. In general, the order of encoding or decoding processing of pictures often differs from the order in which they arrive from the source; necessitating a distinction between the decoding order (i.e., bitstream order) and the output order (i.e., display order) for a decoder.

Video material to be encoded by HEVC is generally expected to be input as progressive scan imagery (either due to the source video originating in that format or resulting from deinterlacing prior to encoding). No explicit coding features are present in the HEVC design to support the use of interlaced scanning, as interlaced scanning is no longer used for displays and is becoming substantially less common for distribution. However, a metadata syntax has been provided in HEVC to allow an encoder to indicate that interlace-scanned video has been sent by coding each field (i.e., the even or odd numbered lines of each video frame) of interlaced video as a separate picture or that it has been sent by coding each interlaced frame as an HEVC coded picture. This provides an efficient method of coding interlaced video without burdening decoders with a need to support a special decoding process for it.

In the following, the various features involved in hybrid video coding using HEVC are highlighted as follows.

1) *Coding tree units and coding tree block (CTB) structure:* The core of the coding layer in previous standards was

Nokia Exhibit 2012, p. 2
Amazon.com v. Nokia
IPR2024-00605

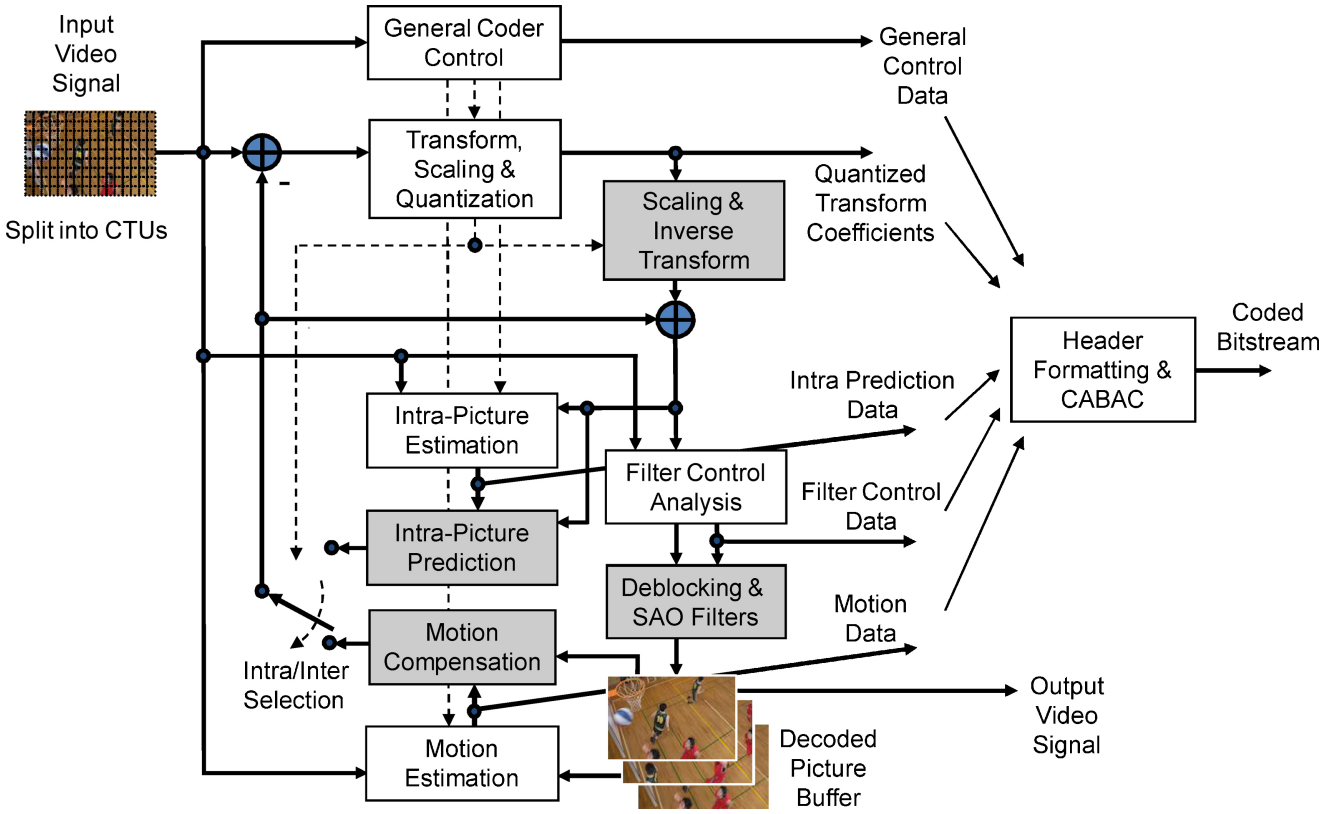

Fig. 1. Typical HEVC video encoder (with decoder modeling elements shaded in light gray).

the macroblock, containing a 16×16 block of luma samples and, in the usual case of 4:2:0 color sampling, two corresponding 8×8 blocks of chroma samples; whereas the analogous structure in HEVC is the coding tree unit (CTU), which has a size selected by the encoder and can be larger than a traditional macroblock. The CTU consists of a luma CTB and the corresponding chroma CTBs and syntax elements. The size $L \times L$ of a luma CTB can be chosen as L = 16, 32, or 64 samples, with the larger sizes typically enabling better compression. HEVC then supports a partitioning of the CTBs into smaller blocks using a tree structure and quadtree-like signaling [8].

2) *Coding units (CUs) and coding blocks (CBs):* The quadtree syntax of the CTU specifies the size and positions of its luma and chroma CBs. The root of the quadtree is associated with the CTU. Hence, the size of the luma CTB is the largest supported size for a luma CB. The splitting of a CTU into luma and chroma CBs is signaled jointly. One luma CB and ordinarily two chroma CBs, together with associated syntax, form a coding unit (CU). A CTB may contain only one CU or may be split to form multiple CUs, and each CU has an associated partitioning into prediction units (PUs) and a tree of transform units (TUs).

3) *Prediction units and prediction blocks (PBs):* The decision whether to code a picture area using interpicture or intrapicture prediction is made at the CU level. A PU partitioning structure has its root at the CU level. Depending on the basic prediction-type decision, the luma and chroma CBs can then be further split in size and predicted from luma and chroma prediction blocks (PBs). HEVC supports variable PB sizes from 64×64 down to 4×4 samples.

4) *TUs and transform blocks*: The prediction residual is coded using block transforms. A TU tree structure has its root at the CU level. The luma CB residual may be identical to the luma transform block (TB) or may be further split into smaller luma TBs. The same applies to the chroma TBs. Integer basis functions similar to those of a discrete cosine transform (DCT) are defined for the square TB sizes 4×4, 8×8, 16×16, and 32×32. For the 4×4 transform of luma intrapicture prediction residuals, an integer transform derived from a form of discrete sine transform (DST) is alternatively specified.

5) *Motion vector signaling:* Advanced motion vector prediction (AMVP) is used, including derivation of several most probable candidates based on data from adjacent PBs and the reference picture. A merge mode for MV coding can also be used, allowing the inheritance of MVs from temporally or spatially neighboring PBs. Moreover, compared to H.264/MPEG-4 AVC, improved skipped and direct motion inference are also specified.

6) *Motion compensation:* Quarter-sample precision is used for the MVs, and 7-tap or 8-tap filters are used for interpolation of fractional-sample positions (compared to six-tap filtering of half-sample positions followed by linear interpolation for quarter-sample positions in

Nokia Exhibit 2012, p. 3
Amazon.com v. Nokia
IPR2024-00605

H.264/MPEG-4 AVC). Similar to H.264/MPEG-4 AVC, multiple reference pictures are used. For each PB, either one or two motion vectors can be transmitted, resulting either in unipredictive or bipredictive coding, respectively. As in H.264/MPEG-4 AVC, a scaling and offset operation may be applied to the prediction signal(s) in a manner known as weighted prediction.

7) *Intrapicture prediction:* The decoded boundary samples of adjacent blocks are used as reference data for spatial prediction in regions where interpicture prediction is not performed. Intrapicture prediction supports 33 directional modes (compared to eight such modes in H.264/MPEG-4 AVC), plus planar (surface fitting) and DC (flat) prediction modes. The selected intrapicture prediction modes are encoded by deriving most probable modes (e.g., prediction directions) based on those of previously decoded neighboring PBs.
8) *Quantization control:* As in H.264/MPEG-4 AVC, uniform reconstruction quantization (URQ) is used in HEVC, with quantization scaling matrices supported for the various transform block sizes.
9) *Entropy coding:* Context adaptive binary arithmetic coding (CABAC) is used for entropy coding. This is similar to the CABAC scheme in H.264/MPEG-4 AVC, but has undergone several improvements to improve its throughput speed (especially for parallel-processing architectures) and its compression performance, and to reduce its context memory requirements.
10) *In-loop deblocking filtering:* A deblocking filter similar to the one used in H.264/MPEG-4 AVC is operated within the interpicture prediction loop. However, the design is simplified in regard to its decision-making and filtering processes, and is made more friendly to parallel processing.
11) *Sample adaptive offset (SAO):* A nonlinear amplitude mapping is introduced within the interpicture prediction loop after the deblocking filter. Its goal is to better reconstruct the original signal amplitudes by using a look-up table that is described by a few additional parameters that can be determined by histogram analysis at the encoder side.

B. High-Level Syntax Architecture

A number of design aspects new to the HEVC standard improve flexibility for operation over a variety of applications and network environments and improve robustness to data losses. However, the high-level syntax architecture used in the H.264/MPEG-4 AVC standard has generally been retained, including the following features.

1) *Parameter set structure:* Parameter sets contain information that can be shared for the decoding of several regions of the decoded video. The parameter set structure provides a robust mechanism for conveying data that are essential to the decoding process. The concepts of sequence and picture parameter sets from H.264/MPEG-4 AVC are augmented by a new video parameter set (VPS) structure.
2) *NAL unit syntax structure*: Each syntax structure is placed into a logical data packet called a network abstraction layer (NAL) unit. Using the content of a two-byte NAL unit header, it is possible to readily identify the purpose of the associated payload data.
3) *Slices*: A slice is a data structure that can be decoded independently from other slices of the same picture, in terms of entropy coding, signal prediction, and residual signal reconstruction. A slice can either be an entire picture or a region of a picture. One of the main purposes of slices is resynchronization in the event of data losses. In the case of packetized transmission, the maximum number of payload bits within a slice is typically restricted, and the number of CTUs in the slice is often varied to minimize the packetization overhead while keeping the size of each packet within this bound.
4) *Supplemental enhancement information (SEI) and video usability information (VUI) metadata*: The syntax includes support for various types of metadata known as SEI and VUI. Such data provide information about the timing of the video pictures, the proper interpretation of the color space used in the video signal, 3-D stereoscopic frame packing information, other display hint information, and so on.

C. Parallel Decoding Syntax and Modified Slice Structuring

Finally, four new features are introduced in the HEVC standard to enhance the parallel processing capability or modify the structuring of slice data for packetization purposes. Each of them may have benefits in particular application contexts, and it is generally up to the implementer of an encoder or decoder to determine whether and how to take advantage of these features.

1) *Tiles*: The option to partition a picture into rectangular regions called tiles has been specified. The main purpose of tiles is to increase the capability for parallel processing rather than provide error resilience. Tiles are independently decodable regions of a picture that are encoded with some shared header information. Tiles can additionally be used for the purpose of spatial random access to local regions of video pictures. A typical tile configuration of a picture consists of segmenting the picture into rectangular regions with approximately equal numbers of CTUs in each tile. Tiles provide parallelism at a more coarse level of granularity (picture/subpicture), and no sophisticated synchronization of threads is necessary for their use.
2) *Wavefront parallel processing*: When wavefront parallel processing (WPP) is enabled, a slice is divided into rows of CTUs. The first row is processed in an ordinary way, the second row can begin to be processed after only two CTUs have been processed in the first row, the third row can begin to be processed after only two CTUs have been processed in the second row, and so on. The context models of the entropy coder in each row are inferred from those in the preceding row with a two-CTU processing lag. WPP provides a form of processing parallelism at a rather fine level of

Nokia Exhibit 2012, p. 4
Amazon.com v. Nokia
IPR2024-00605

granularity, i.e., within a slice. WPP may often provide better compression performance than tiles (and avoid some visual artifacts that may be induced by using tiles).

3) *Dependent slice segments*: A structure called a dependent slice segment allows data associated with a particular wavefront entry point or tile to be carried in a separate NAL unit, and thus potentially makes that data available to a system for fragmented packetization with lower latency than if it were all coded together in one slice. A dependent slice segment for a wavefront entry point can only be decoded after at least part of the decoding process of another slice segment has been performed. Dependent slice segments are mainly useful in low-delay encoding, where other parallel tools might penalize compression performance.

In the following two sections, a more detailed description of the key features is given.

III. High-Level Syntax

The high-level syntax of HEVC contains numerous elements that have been inherited from the NAL of H.264/MPEG-4 AVC. The NAL provides the ability to map the video coding layer (VCL) data that represent the content of the pictures onto various transport layers, including RTP/IP, ISO MP4, and H.222.0/MPEG-2 Systems, and provides a framework for packet loss resilience. For general concepts of the NAL design such as NAL units, parameter sets, access units, the byte stream format, and packetized formatting, please refer to [9]–[11].

NAL units are classified into VCL and non-VCL NAL units according to whether they contain coded pictures or other associated data, respectively. In the HEVC standard, several VCL NAL unit types identifying categories of pictures for decoder initialization and random-access purposes are included. Table I lists the NAL unit types and their associated meanings and type classes in the HEVC standard.

TABLE I
NAL Unit Types, Meanings, and Type Classes

Type	Meaning	Class
0, 1	Slice segment of ordinary trailing picture	VCL
2, 3	Slice segment of TSA picture	VCL
4, 5	Slice segment of STSA picture	VCL
6, 7	Slice segment of RADL picture	VCL
8, 9	Slice segment of RASL picture	VCL
10–15	Reserved for future use	VCL
16–18	Slice segment of BLA picture	VCL
19, 20	Slice segment of IDR picture	VCL
21	Slice segment of CRA picture	VCL
22–31	Reserved for future use	VCL
32	Video parameter set (VPS)	non-VCL
33	Sequence parameter set (SPS)	non-VCL
34	Picture parameter set (PPS)	non-VCL
35	Access unit delimiter	non-VCL
36	End of sequence	non-VCL
37	End of bitstream	non-VCL
38	Filler data	non-VCL
39, 40	SEI messages	non-VCL
41–47	Reserved for future use	non-VCL
48–63	Unspecified (available for system use)	non-VCL

The following subsections present a description of the new capabilities supported by the high-level syntax.

A. Random Access and Bitstream Splicing Features

The new design supports special features to enable random access and bitstream splicing. In H.264/MPEG-4 AVC, a bitstream must always start with an IDR access unit. An IDR access unit contains an independently coded picture—i.e., a coded picture that can be decoded without decoding any previous pictures in the NAL unit stream. The presence of an IDR access unit indicates that no subsequent picture in the bitstream will require reference to pictures prior to the picture that it contains in order to be decoded. The IDR picture is used within a coding structure known as a closed GOP (in which GOP stands for group of pictures).

The new clean random access (CRA) picture syntax specifies the use of an independently coded picture at the location of a random access point (RAP), i.e., a location in a bitstream at which a decoder can begin successfully decoding pictures without needing to decode any pictures that appeared earlier in the bitstream, which supports an efficient temporal coding order known as open GOP operation. Good support of random access is critical for enabling channel switching, seek operations, and dynamic streaming services. Some pictures that follow a CRA picture in decoding order and precede it in display order may contain interpicture prediction references to pictures that are not available at the decoder. These nondecodable pictures must therefore be discarded by a decoder that starts its decoding process at a CRA point. For this purpose, such nondecodable pictures are identified as random access skipped leading (RASL) pictures. The location of splice points from different original coded bitstreams can be indicated by broken link access (BLA) pictures. A bitstream splicing operation can be performed by simply changing the NAL unit type of a CRA picture in one bitstream to the value that indicates a BLA picture and concatenating the new bitstream at the position of a RAP picture in the other bitstream. A RAP picture may be an IDR, CRA, or BLA picture, and both CRA and BLA pictures may be followed by RASL pictures in the bitstream (depending on the particular value of the NAL unit type used for a BLA picture). Any RASL pictures associated with a BLA picture must always be discarded by the decoder, as they may contain references to pictures that are not actually present in the bitstream due to a splicing operation. The other type of picture that can follow a RAP picture in decoding order and precede it in output order is the random access decodable leading (RADL) picture, which cannot contain references to any pictures that precede the RAP picture in decoding order. RASL and RADL pictures are collectively referred to as leading pictures (LPs). Pictures that follow a RAP picture in both decoding order and output order, which are known as trailing pictures, cannot contain references to LPs for interpicture prediction.

B. Temporal Sublayering Support

Similar to the temporal scalability feature in the H.264/MPEG-4 AVC scalable video coding (SVC) extension [12],

Nokia Exhibit 2012, p. 5
Amazon.com v. Nokia
IPR2024-00605

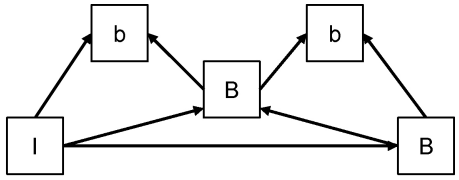

POC	0	1	2	3	4
Decoding order	1	4	3	5	2
RPS	–	[0,2]	[0,4]	[2,4]	[0]

Fig. 2. Example of a temporal prediction structure and the POC values, decoding order, and RPS content for each picture.

HEVC specifies a temporal identifier in the NAL unit header, which indicates a level in a hierarchical temporal prediction structure. This was introduced to achieve temporal scalability without the need to parse parts of the bitstream other than the NAL unit header.

Under certain circumstances, the number of decoded temporal sublayers can be adjusted during the decoding process of one coded video sequence. The location of a point in the bitstream at which sublayer switching is possible to begin decoding some higher temporal layers can be indicated by the presence of temporal sublayer access (TSA) pictures and stepwise TSA (STSA) pictures. At the location of a TSA picture, it is possible to switch from decoding a lower temporal sublayer to decoding any higher temporal sublayer, and at the location of an STSA picture, it is possible to switch from decoding a lower temporal sublayer to decoding only one particular higher temporal sublayer (but not the further layers above that, unless they also contain STSA or TSA pictures).

C. Additional Parameter Sets

The VPS has been added as metadata to describe the overall characteristics of coded video sequences, including the dependences between temporal sublayers. The primary purpose of this is to enable the compatible extensibility of the standard in terms of signaling at the systems layer, e.g., when the base layer of a future extended scalable or multiview bitstream would need to be decodable by a legacy decoder, but for which additional information about the bitstream structure that is only relevant for the advanced decoder would be ignored.

D. Reference Picture Sets and Reference Picture Lists

For multiple-reference picture management, a particular set of previously decoded pictures needs to be present in the decoded picture buffer (DPB) for the decoding of the remainder of the pictures in the bitstream. To identify these pictures, a list of picture order count (POC) identifiers is transmitted in each slice header. The set of retained reference pictures is called the reference picture set (RPS). Fig. 2 shows POC values, decoding order, and RPSs for an example temporal prediction structure.

As in H.264/MPEG-4 AVC, there are two lists that are constructed as lists of pictures in the DPB, and these are called reference picture list 0 and list 1. An index called a reference picture index is used to identify a particular picture in one of these lists. For uniprediction, a picture can be selected from either of these lists. For biprediction, two pictures are selected—one from each list. When a list contains only one picture, the reference picture index implicitly has the value 0 and does not need to be transmitted in the bitstream.

The high-level syntax for identifying the RPS and establishing the reference picture lists for interpicture prediction is more robust to data losses than in the prior H.264/MPEG-4 AVC design, and is more amenable to such operations as random access and trick mode operation (e.g., fast-forward, smooth rewind, seeking, and adaptive bitstream switching). A key aspect of this improvement is that the syntax is more explicit, rather than depending on inferences from the stored internal state of the decoding process as it decodes the bitstream picture by picture. Moreover, the associated syntax for these aspects of the design is actually simpler than it had been for H.264/MPEG-4 AVC.

IV. HEVC Video Coding Techniques

As in all prior ITU-T and ISO/IEC JTC 1 video coding standards since H.261 [2], the HEVC design follows the classic block-based hybrid video coding approach (as depicted in Fig. 1). The basic source-coding algorithm is a hybrid of interpicture prediction to exploit temporal statistical dependences, intrapicture prediction to exploit spatial statistical dependences, and transform coding of the prediction residual signals to further exploit spatial statistical dependences. There is no single coding element in the HEVC design that provides the majority of its significant improvement in compression efficiency in relation to prior video coding standards. It is, rather, a plurality of smaller improvements that add up to the significant gain.

A. Sampled Representation of Pictures

For representing color video signals, HEVC typically uses a tristimulus YCbCr color space with 4:2:0 sampling (although extension to other sampling formats is straightforward, and is planned to be defined in a subsequent version). This separates a color representation into three components called Y, Cb, and Cr. The Y component is also called luma, and represents brightness. The two chroma components Cb and Cr represent the extent to which the color deviates from gray toward blue and red, respectively. Because the human visual system is more sensitive to luma than chroma, the 4:2:0 sampling structure is typically used, in which each chroma component has one fourth of the number of samples of the luma component (half the number of samples in both the horizontal and vertical dimensions). Each sample for each component is typically represented with 8 or 10 b of precision, and the 8-b case is the more typical one. In the remainder of this paper, we focus our attention on the typical use: YCbCr components with 4:2:0 sampling and 8 b per sample for the representation of the encoded input and decoded output video signal.

The video pictures are typically progressively sampled with rectangular picture sizes $W \times H$, where W is the width and

Nokia Exhibit 2012, p. 6
Amazon.com v. Nokia
IPR2024-00605

H is the height of the picture in terms of luma samples. Each chroma component array, with 4:2:0 sampling, is then $W/2 \times H/2$. Given such a video signal, the HEVC syntax partitions the pictures further as described follows.

B. Division of the Picture into Coding Tree Units

A picture is partitioned into coding tree units (CTUs), which each contain luma CTBs and chroma CTBs. A luma CTB covers a rectangular picture area of $L \times L$ samples of the luma component and the corresponding chroma CTBs cover each $L/2 \times L/2$ samples of each of the two chroma components. The value of L may be equal to 16, 32, or 64 as determined by an encoded syntax element specified in the SPS. Compared with the traditional macroblock using a fixed array size of 16×16 luma samples, as used by all previous ITU-T and ISO/IEC JTC 1 video coding standards since H.261 (that was standardized in 1990), HEVC supports variable-size CTBs selected according to needs of encoders in terms of memory and computational requirements. The support of larger CTBs than in previous standards is particularly beneficial when encoding high-resolution video content. The luma CTB and the two chroma CTBs together with the associated syntax form a CTU. The CTU is the basic processing unit used in the standard to specify the decoding process.

C. Division of the CTB into CBs

The blocks specified as luma and chroma CTBs can be directly used as CBs or can be further partitioned into multiple CBs. Partitioning is achieved using tree structures. The tree partitioning in HEVC is generally applied simultaneously to both luma and chroma, although exceptions apply when certain minimum sizes are reached for chroma.

The CTU contains a quadtree syntax that allows for splitting the CBs to a selected appropriate size based on the signal characteristics of the region that is covered by the CTB. The quadtree splitting process can be iterated until the size for a luma CB reaches a minimum allowed luma CB size that is selected by the encoder using syntax in the SPS and is always 8×8 or larger (in units of luma samples).

The boundaries of the picture are defined in units of the minimum allowed luma CB size. As a result, at the right and bottom edges of the picture, some CTUs may cover regions that are partly outside the boundaries of the picture. This condition is detected by the decoder, and the CTU quadtree is implicitly split as necessary to reduce the CB size to the point where the entire CB will fit into the picture.

D. PBs and PUs

The prediction mode for the CU is signaled as being intra or inter, according to whether it uses intrapicture (spatial) prediction or interpicture (temporal) prediction.

When the prediction mode is signaled as intra, the PB size, which is the block size at which the intrapicture prediction mode is established is the same as the CB size for all block sizes except for the smallest CB size that is allowed in the bitstream. For the latter case, a flag is present that indicates whether the CB is split into four PB quadrants that each have their own intrapicture prediction mode. The reason for allowing this split is to enable distinct intrapicture prediction mode selections for blocks as small as 4×4 in size. When the luma intrapicture prediction operates with 4×4 blocks, the chroma intrapicture prediction also uses 4×4 blocks (each covering the same picture region as four 4×4 luma blocks). The actual region size at which the intrapicture prediction operates (which is distinct from the PB size, at which the intrapicture prediction mode is established) depends on the residual coding partitioning that is described as follows.

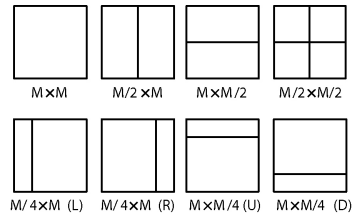

Fig. 3. Modes for splitting a CB into PBs, subject to certain size constraints. For intrapicture-predicted CBs, only $M \times M$ and $M/2 \times M/2$ are supported.

When the prediction mode is signaled as inter, it is specified whether the luma and chroma CBs are split into one, two, or four PBs. The splitting into four PBs is allowed only when the CB size is equal to the minimum allowed CB size, using an equivalent type of splitting as could otherwise be performed at the CB level of the design rather than at the PB level. When a CB is split into four PBs, each PB covers a quadrant of the CB. When a CB is split into two PBs, six types of this splitting are possible. The partitioning possibilities for interpicture-predicted CBs are depicted in Fig. 3. The upper partitions illustrate the cases of not splitting the CB of size $M \times M$, of splitting the CB into two PBs of size $M \times M/2$ or $M/2 \times M$, or splitting it into four PBs of size $M/2 \times M/2$. The lower four partition types in Fig. 3 are referred to as asymmetric motion partitioning (AMP), and are only allowed when M is 16 or larger for luma. One PB of the asymmetric partition has the height or width $M/4$ and width or height M, respectively, and the other PB fills the rest of the CB by having a height or width of $3M/4$ and width or height M. Each interpicture-predicted PB is assigned one or two motion vectors and reference picture indices. To minimize worst-case memory bandwidth, PBs of luma size 4×4 are not allowed for interpicture prediction, and PBs of luma sizes 4×8 and 8×4 are restricted to unipredictive coding. The interpicture prediction process is further described as follows.

The luma and chroma PBs, together with the associated prediction syntax, form the PU.

E. Tree-Structured Partitioning Into Transform Blocks and Units

For residual coding, a CB can be recursively partitioned into transform blocks (TBs). The partitioning is signaled by a residual quadtree.

Only square CB and TB partitioning is specified, where a block can be recursively split into quadrants, as illustrated in Fig. 4. For a given luma CB of size $M \times M$, a flag signals whether it is split into four blocks of size $M/2 \times M/2$. If

Nokia Exhibit 2012, p. 7
Amazon.com v. Nokia
IPR2024-00605

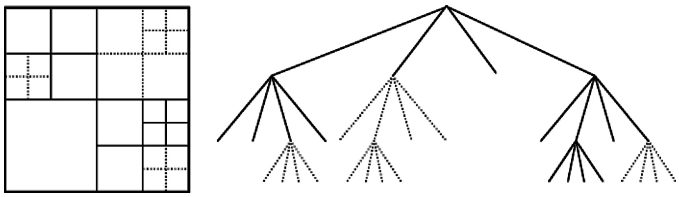

Fig. 4. Subdivision of a CTB into CBs [and transform block (TBs)]. Solid lines indicate CB boundaries and dotted lines indicate TB boundaries. (a) CTB with its partitioning. (b) Corresponding quadtree.

further splitting is possible, as signaled by a maximum depth of the residual quadtree indicated in the SPS, each quadrant is assigned a flag that indicates whether it is split into four quadrants. The leaf node blocks resulting from the residual quadtree are the transform blocks that are further processed by transform coding. The encoder indicates the maximum and minimum luma TB sizes that it will use. Splitting is implicit when the CB size is larger than the maximum TB size. Not splitting is implicit when splitting would result in a luma TB size smaller than the indicated minimum. The chroma TB size is half the luma TB size in each dimension, except when the luma TB size is 4×4, in which case a single 4×4 chroma TB is used for the region covered by four 4×4 luma TBs. In the case of intrapicture-predicted CUs, the decoded samples of the nearest-neighboring TBs (within or outside the CB) are used as reference data for intrapicture prediction.

In contrast to previous standards, the HEVC design allows a TB to span across multiple PBs for interpicture-predicted CUs to maximize the potential coding efficiency benefits of the quadtree-structured TB partitioning.

F. Slices and Tiles

Slices are a sequence of CTUs that are processed in the order of a raster scan. A picture may be split into one or several slices as shown in Fig. 5(a) so that a picture is a collection of one or more slices. Slices are self-contained in the sense that, given the availability of the active sequence and picture parameter sets, their syntax elements can be parsed from the bitstream and the values of the samples in the area of the picture that the slice represents can be correctly decoded (except with regard to the effects of in-loop filtering near the edges of the slice) without the use of any data from other slices in the same picture. This means that prediction within the picture (e.g., intrapicture spatial signal prediction or prediction of motion vectors) is not performed across slice boundaries. Some information from other slices may, however, be needed to apply the in-loop filtering across slice boundaries. Each slice can be coded using different coding types as follows.

1) *I slice:* A slice in which all CUs of the slice are coded using only intrapicture prediction.
2) *P slice:* In addition to the coding types of an I slice, some CUs of a P slice can also be coded using interpicture prediction with at most one motion-compensated prediction signal per PB (i.e., uniprediction). P slices only use reference picture list 0.
3) *B slice:* In addition to the coding types available in a P slice, some CUs of the B slice can also be coded using interpicture prediction with at most two motion-compensated prediction signals per PB (i.e., biprediction). B slices use both reference picture list 0 and list 1.

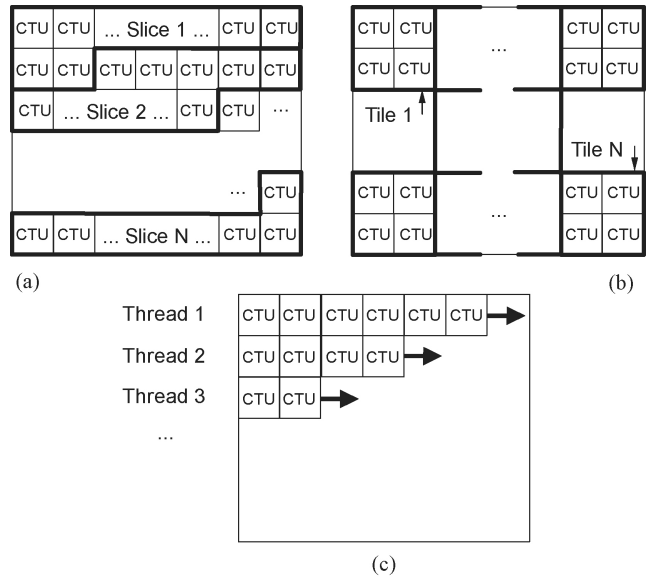

Fig. 5. Subdivision of a picture into (a) slices and (b) tiles. (c) Illustration of wavefront parallel processing.

The main purpose of slices is resynchronization after data losses. Furthermore, slices are often restricted to use a maximum number of bits, e.g., for packetized transmission. Therefore, slices may often contain a highly varying number of CTUs per slice in a manner dependent on the activity in the video scene. In addition to slices, HEVC also defines tiles, which are self-contained and independently decodable rectangular regions of the picture. The main purpose of tiles is to enable the use of parallel processing architectures for encoding and decoding. Multiple tiles may share header information by being contained in the same slice. Alternatively, a single tile may contain multiple slices. A tile consists of a rectangular arranged group of CTUs (typically, but not necessarily, with all of them containing about the same number of CTUs), as shown in Fig. 5(b).

To assist with the granularity of data packetization, dependent slices are additionally defined. Finally, with WPP, a slice is divided into rows of CTUs. The decoding of each row can be begun as soon a few decisions that are needed for prediction and adaptation of the entropy coder have been made in the preceding row. This supports parallel processing of rows of CTUs by using several processing threads in the encoder or decoder (or both). An example is shown in Fig. 5(c). For design simplicity, WPP is not allowed to be used in combination with tiles (although these features could, in principle, work properly together).

G. Intrapicture Prediction

Intrapicture prediction operates according to the TB size, and previously decoded boundary samples from spatially neighboring TBs are used to form the prediction signal. Directional prediction with 33 different directional orientations is defined for (square) TB sizes from 4×4 up to 32×32. The

Nokia Exhibit 2012, p. 8
Amazon.com v. Nokia
IPR2024-00605

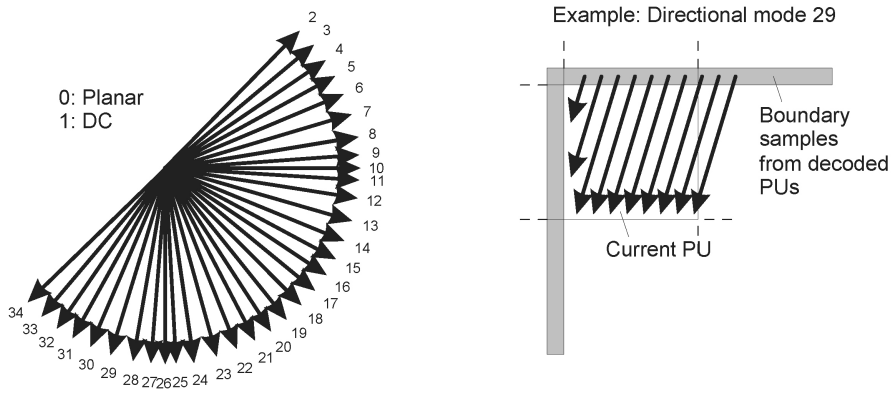

Fig. 6. Modes and directional orientations for intrapicture prediction.

possible prediction directions are shown in Fig. 6. Alternatively, planar prediction (assuming an amplitude surface with a horizontal and vertical slope derived from the boundaries) and DC prediction (a flat surface with a value matching the mean value of the boundary samples) can also be used. For chroma, the horizontal, vertical, planar, and DC prediction modes can be explicitly signaled, or the chroma prediction mode can be indicated to be the same as the luma prediction mode (and, as a special case to avoid redundant signaling, when one of the first four choices is indicated and is the same as the luma prediction mode, the Intra_Angular[34] mode is applied instead).

Each CB can be coded by one of several coding types, depending on the slice type. Similar to H.264/MPEG-4 AVC, intrapicture predictive coding is supported in all slice types. HEVC supports various intrapicture predictive coding methods referred to as Intra_Angular, Intra_Planar, and Intra_DC. The following subsections present a brief further explanation of these and several techniques to be applied in common.

1) *PB Partitioning:* An intrapicture-predicted CB of size $M \times M$ may have one of two types of PB partitions referred to as PART_2N×2N and PART_N×N, the first of which indicates that the CB is not split and the second indicates that the CB is split into four equal-sized PBs. (Conceptually, in this notation, $N = M/2$.) However, it is possible to represent the same regions that would be specified by four PBs by using four smaller CBs when the size of the current CB is larger than the minimum CU size. Thus, the HEVC design only allows the partitioning type PART_N×N to be used when the current CB size is equal to the minimum CU size. This means that the PB size is always equal to the CB size when the CB is coded using an intrapicture prediction mode and the CB size is not equal to the minimum CU size. Although the intrapicture prediction mode is established at the PB level, the actual prediction process operates separately for each TB.

2) *Intra_Angular Prediction:* Spatial-domain intrapicture prediction has previously been successfully used in H.264/MPEG-4 AVC. The intrapicture prediction of HEVC similarly operates in the spatial domain, but is extended significantly—mainly due to the increased size of the TB and an increased number of selectable prediction directions. Compared to the eight prediction directions of H.264/MPEG-4 AVC, HEVC supports a total of 33 prediction directions, denoted as Intra_Angular[k], where k is a mode number from 2 to 34. The angles are intentionally designed to provide denser coverage for near-horizontal and near-vertical angles and coarser coverage for near-diagonal angles to reflect the observed statistical prevalence of the angles and the effectiveness of the signal prediction processing.

When using an Intra_Angular mode, each TB is predicted directionally from spatially neighboring samples that are reconstructed (but not yet filtered by the in-loop filters) before being used for this prediction. For a TB of size $N \times N$, a total of $4N+1$ spatially neighboring samples may be used for the prediction, as shown in Fig. 6. When available from preceding decoding operations, samples from lower left TBs can be used for prediction in HEVC in addition to samples from TBs at the left, above, and above right of the current TB.

The prediction process of the Intra_Angular modes can involve extrapolating samples from the projected reference sample location according to a given directionality. To remove the need for sample-by-sample switching between reference row and column buffers, for Intra_Angular[k] with k in the range of 2–17, the samples located in the above row are projected as additional samples located in the left column; and with k in the range of 18–34, the samples located at the left column are projected as samples located in the above row.

To improve the intrapicture prediction accuracy, the projected reference sample location is computed with 1/32 sample accuracy. Bilinear interpolation is used to obtain the value of the projected reference sample using two closest reference samples located at integer positions.

The prediction process of the Intra_Angular modes is consistent across all block sizes and prediction directions, whereas H.264/MPEG-4 AVC uses different methods for its supported block sizes of 4×4, 8×8, and 16×16. This design consistency is especially desirable since HEVC supports a greater variety of TB sizes and a significantly increased number of prediction directions compared to H.264/MPEG-4 AVC.

3) *Intra_Planar and Intra_DC Prediction:* In addition to Intra_Angular prediction that targets regions with strong directional edges, HEVC supports two alternative prediction methods, Intra_Planar and Intra_DC, for which similar modes were specified in H.264/MPEG-4 AVC. While Intra_DC prediction uses an average value of reference samples for the prediction, average values of two linear predictions using four corner reference samples are used in Intra_Planar prediction

Nokia Exhibit 2012, p. 9
Amazon.com v. Nokia
IPR2024-00605

to prevent discontinuities along the block boundaries. The Intra_Planar prediction mode is supported at all block sizes in HEVC, while H.264/MPEG-4 AVC supports plane prediction only when the luma PB size is 16×16, and its plane prediction operates somewhat differently from the planar prediction in HEVC.

4) *Reference Sample Smoothing:* In HEVC, the reference samples used for the intrapicture prediction are sometimes filtered by a three-tap [1 2 1]/4 smoothing filter in a manner similar to what was used for 8×8 intrapicture prediction in H.264/MPEG-4 AVC. HEVC applies smoothing operations more adaptively, according to the directionality, the amount of detected discontinuity, and the block size. As in H.264/MPEG-4 AVC, the smoothing filter is not applied for 4×4 blocks. For 8×8 blocks, only the diagonal directions, Intra_Angular[k] with k = 2, 18, or 34, use the reference sample smoothing. For 16×16 blocks, the reference samples are filtered for most directions except the near-horizontal and near-vertical directions, k in the range of 9–11 and 25–27. For 32×32 blocks, all directions except the exactly horizontal (k = 10) and exactly vertical (k = 26) directions use the smoothing filter, and when the amount of detected discontinuity exceeds a threshold, bilinear interpolation from three neighboring region samples is applied to form a smooth prediction.

The Intra_Planar mode also uses the smoothing filter when the block size is greater than or equal to 8×8, and the smoothing is not used (or useful) for the Intra_DC case.

5) *Boundary Value Smoothing:* To remove discontinuities along block boundaries, in three modes, Intra_DC (mode 1) and Intra_Angular[k] with k = 10 or 26 (exactly horizontal or exactly vertical), the boundary samples inside the TB are replaced by filtered values when the TB size is smaller than 32 × 32. For Intra_DC mode, both the first row and column of samples in the TB are replaced by the output of a two-tap [3 1]/4 filter fed by their original value and the adjacent reference sample. In horizontal (Intra_Angular[10]) prediction, the boundary samples of the first column of the TB are modified such that half of the difference between their neighbored reference sample and the top-left reference sample is added. This makes the prediction signal more smooth when large variations in the vertical direction are present. In vertical (Intra_Angular[26]) prediction, the same is applied to the first row of samples.

6) *Reference Sample Substitution:* The neighboring reference samples are not available at the slice or tile boundaries. In addition, when a loss-resilience feature known as constrained intra prediction is enabled, the neighboring reference samples inside any interpicture-predicted PB are also considered not available in order to avoid letting potentially corrupted prior decoded picture data propagate errors into the prediction signal. While only Intra_DC prediction mode is allowed for such cases in H.264/MPEG-4 AVC, HEVC allows the use of other intrapicture prediction modes after substituting the nonavailable reference sample values with the neighboring available reference sample values.

7) *Mode Coding:* HEVC supports a total of 33 Intra_Angular prediction modes and Intra_Planar and Intra_DC prediction modes for luma prediction for all block sizes. Due to the increased number of directions, HEVC considers three most probable modes (MPMs) when coding the luma intrapicture prediction mode predictively, rather than the one most probable mode considered in H.264/MPEG-4 AVC.

Among the three most probable modes, the first two are initialized by the luma intrapicture prediction modes of the above and left PBs if those PBs are available and are coded using an intrapicture prediction mode. Any unavailable prediction mode is considered to be Intra_DC. The PB above the luma CTB is always considered to be unavailable in order to avoid the need to store a line buffer of neighboring luma prediction modes.

When the first two most probable modes are not equal, the third most probable mode is set equal to Intra_Planar, Intra_DC, or Intra_Angular[26] (vertical), according to which of these modes, in this order, is not a duplicate of one of the first two modes. When the first two most probable modes are the same, if this first mode has the value Intra_Planar or Intra_DC, the second and third most probable modes are assigned as Intra_Planar, Intra_DC, or Intra_Angular[26], according to which of these modes, in this order, are not duplicates. When the first two most probable modes are the same and the first mode has an Intra_Angular value, the second and third most probable modes are chosen as the two angular prediction modes that are closest to the angle (i.e., the value of k) of the first.

In the case that the current luma prediction mode is one of three MPMs, only the MPM index is transmitted to the decoder. Otherwise, the index of the current luma prediction mode excluding the three MPMs is transmitted to the decoder by using a 5-b fixed length code.

For chroma intrapicture prediction, HEVC allows the encoder to select one of five modes: Intra_Planar, Intra_Angular[26] (vertical), Intra_Angular[10] (horizontal), Intra_DC, and Intra_Derived. The Intra_Derived mode specifies that the chroma prediction uses the same angular direction as the luma prediction. With this scheme, all angular modes specified for luma in HEVC can, in principle, also be used in the chroma prediction, and a good tradeoff is achieved between prediction accuracy and the signaling overhead. The selected chroma prediction mode is coded directly (without using an MPM prediction mechanism).

H. Interpicture Prediction

1) *PB Partitioning:* Compared to intrapicture-predicted CBs, HEVC supports more PB partition shapes for interpicture-predicted CBs. The partitioning modes of PART_2N×2N, PART_2N×N, and PART_N×2N indicate the cases when the CB is not split, split into two equal-size PBs horizontally, and split into two equal-size PBs vertically, respectively. PART_N×N specifies that the CB is split into four equal-size PBs, but this mode is only supported when the CB size is equal to the smallest allowed CB size. In addition, there are four partitioning types that support splitting the CB into two PBs having different sizes: PART_2N×nU, PART_2N×nD, PART_nL×2N, and PART_nR×2N. These types are known as asymmetric motion partitions.

2) *Fractional Sample Interpolation:* The samples of the PB for an intrapicture-predicted CB are obtained from those of a

Nokia Exhibit 2012, p. 10
Amazon.com v. Nokia
IPR2024-00605

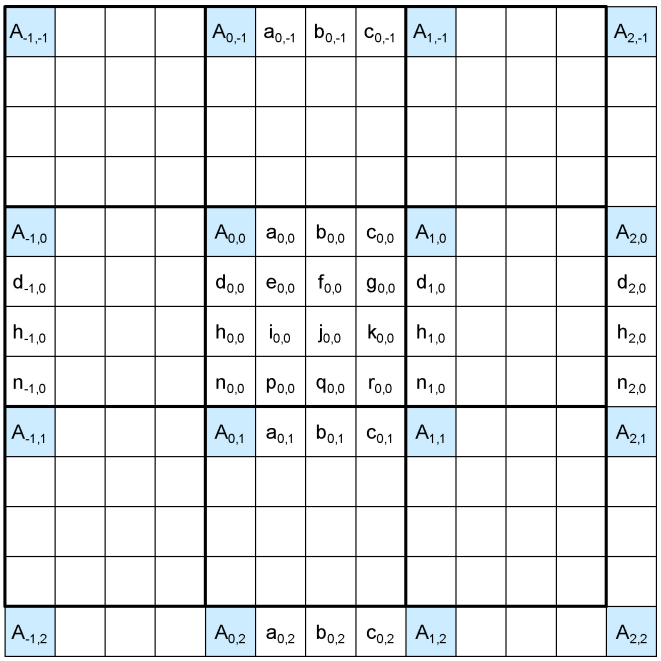

Fig. 7. Integer and fractional sample positions for luma interpolation.

corresponding block region in the reference picture identified by a reference picture index, which is at a position displaced by the horizontal and vertical components of the motion vector. Except for the case when the motion vector has an integer value, fractional sample interpolation is used to generate the prediction samples for noninteger sampling positions. As in H.264/MPEG-4 AVC, HEVC supports motion vectors with units of one quarter of the distance between luma samples. For chroma samples, the motion vector accuracy is determined according to the chroma sampling format, which for 4:2:0 sampling results in units of one eighth of the distance between chroma samples.

The fractional sample interpolation for luma samples in HEVC uses separable application of an eight-tap filter for the half-sample positions and a seven-tap filter for the quarter-sample positions. This is in contrast to the process used in H.264/MPEG-4 AVC, which applies a two-stage interpolation process by first generating the values of one or two neighboring samples at half-sample positions using six-tap filtering, rounding the intermediate results, and then averaging two values at integer or half-sample positions. HEVC instead uses a single consistent separable interpolation process for generating all fractional positions without intermediate rounding operations, which improves precision and simplifies the architecture of the fractional sample interpolation. The interpolation precision is also improved in HEVC by using longer filters, i.e., seven-tap or eight-tap filtering rather than the six-tap filtering used in H.264/MPEG-4 AVC. Using only seven taps rather than the eight used for half-sample positions was sufficient for the quarter-sample interpolation positions since the quarter-sample positions are relatively close to integer-sample positions, so the most distant sample in an eight-tap interpolator would effectively be farther away than in the half-sample case (where the relative distances of the integer-sample positions are symmetric). The actual filter tap values of the interpolation filtering kernel were partially derived from DCT basis function equations.

TABLE II
FILTER COEFFICIENTS FOR LUMA FRACTIONAL SAMPLE INTERPOLATION

Index i	−3	−2	−1	0	1	2	3	4
hfilter[i]	−1	4	−11	40	40	−11	4	1
qfilter[i]	−1	4	−10	58	17	−5	1	

In Fig. 7, the positions labeled with upper-case letters, $A_{i,j}$, represent the available luma samples at integer sample locations, whereas the other positions labeled with lower-case letters represent samples at noninteger sample locations, which need to be generated by interpolation.

The samples labeled $a_{0,j}$, $b_{0,j}$, $c_{0,j}$, $d_{0,0}$, $h_{0,0}$, and $n_{0,0}$ are derived from the samples $A_{i,j}$ by applying the eight-tap filter for half-sample positions and the seven-tap filter for the quarter-sample positions as follows:

$$\begin{aligned}
a_{0,j} &= \left(\textstyle\sum_{i=-3..3} A_{i,j}\,\mathrm{qfilter}[i]\right) >> (B-8)\\
b_{0,j} &= \left(\textstyle\sum_{i=-3..4} A_{i,j}\,\mathrm{hfilter}[i]\right) >> (B-8)\\
c_{0,j} &= \left(\textstyle\sum_{i=-2..4} A_{i,j}\,\mathrm{qfilter}[1-i]\right) >> (B-8)\\
d_{0,0} &= \left(\textstyle\sum_{i=-3..3} A_{0,j}\,\mathrm{qfilter}[j]\right) >> (B-8)\\
h_{0,0} &= \left(\textstyle\sum_{i=-3..4} A_{0,j}\,\mathrm{hfilter}[j]\right) >> (B-8)\\
n_{0,0} &= \left(\textstyle\sum_{j=-2..4} A_{0,j}\,\mathrm{qfilter}[1-j]\right) >> (B-8)
\end{aligned}$$

where the constant $B \geq 8$ is the bit depth of the reference samples (and typically $B = 8$ for most applications) and the filter coefficient values are given in Table II. In these formulas, $>>$ denotes an arithmetic right shift operation.

The samples labeled $e_{0,0}$, $f_{0,0}$, $g_{0,0}$, $i_{0,0}$, $j_{0,0}$, $k_{0,0}$, $p_{0,0}$, $q_{0,0}$, and $r_{0,0}$ can be derived by applying the corresponding filters to samples located at vertically adjacent $a_{0,j}$, $b_{0,j}$ and $c_{0,j}$ positions as follows:

$$\begin{aligned}
e_{0,0} &= \left(\textstyle\sum_{v=-3..3} a_{0,v}\,\mathrm{qfilter}[v]\right) >> 6\\
f_{0,0} &= \left(\textstyle\sum_{v=-3..3} b_{0,v}\,\mathrm{qfilter}[v]\right) >> 6\\
g_{0,0} &= \left(\textstyle\sum_{v=-3..3} c_{0,v}\,\mathrm{qfilter}[v]\right) >> 6\\
i_{0,0} &= \left(\textstyle\sum_{v=-3..4} a_{0,v}\,\mathrm{hfilter}[v]\right) >> 6\\
j_{0,0} &= \left(\textstyle\sum_{v=-3..4} b_{0,v}\,\mathrm{hfilter}[v]\right) >> 6\\
k_{0,0} &= \left(\textstyle\sum_{v=-3..4} c_{0,v}\,\mathrm{hfilter}[v]\right) >> 6\\
p_{0,0} &= \left(\textstyle\sum_{v=-2..4} a_{0,v}\,\mathrm{qfilter}[1-v]\right) >> 6\\
q_{0,0} &= \left(\textstyle\sum_{v=-2..4} b_{0,v}\,\mathrm{qfilter}[1-v]\right) >> 6\\
r_{0,0} &= \left(\textstyle\sum_{v=-2..4} c_{0,v}\,\mathrm{qfilter}[1-v]\right) >> 6.
\end{aligned}$$

The interpolation filtering is separable when B is equal to 8, so the same values could be computed in this case by applying the vertical filtering before the horizontal filtering. When implemented appropriately, the motion compensation process of HEVC can be performed using only 16-b storage elements (although care must be taken to do this correctly).

It is at this point in the process that weighted prediction is applied when selected by the encoder. Whereas H.264/MPEG-4 AVC supported both temporally implicit and explicit weighted prediction, in HEVC only explicit weighted prediction is applied, by scaling and offsetting the prediction with values sent explicitly by the encoder. The bit depth of the prediction is then adjusted to the original bit depth of the reference samples. In the case of uniprediction, the interpolated (and possibly weighted) prediction value is rounded,

Nokia Exhibit 2012, p. 11
Amazon.com v. Nokia
IPR2024-00605

TABLE III
FILTER COEFFICIENTS FOR CHROMA FRACTIONAL SAMPLE INTERPOLATION

Index	−1	0	1	2
filter1[i]	−2	58	10	−2
filter2[i]	−4	54	16	−2
filter3[i]	−6	46	28	−4
filter4[i]	−4	36	36	−4

right-shifted, and clipped to have the original bit depth. In the case of biprediction, the interpolated (and possibly weighted) prediction values from two PBs are added first, and then rounded, right-shifted, and clipped.

In H.264/MPEG-4 AVC, up to three stages of rounding operations are required to obtain each prediction sample (for samples located at quarter-sample positions). If biprediction is used, the total number of rounding operations is then seven in the worst case. In HEVC, at most two rounding operations are needed to obtain each sample located at the quarter-sample positions, thus five rounding operations are sufficient in the worst case when biprediction is used. Moreover, in the most common usage, where the bit depth B is 8 b, the total number of rounding operations in the worst case is further reduced to 3. Due to the lower number of rounding operations, the accumulated rounding error is decreased and greater flexibility is enabled in regard to the manner of performing the necessary operations in the decoder.

The fractional sample interpolation process for the chroma components is similar to the one for the luma component, except that the number of filter taps is 4 and the fractional accuracy is 1/8 for the usual 4:2:0 chroma format case. HEVC defines a set of four-tap filters for eighth-sample positions, as given in Table III for the case of 4:2:0 chroma format (where, in H.264/MPEG-4 AVC, only two-tap bilinear filtering was applied).

Filter coefficient values denoted as filter1[i], filter2[i], filter3[i], and filter4[i] with $i = -1,\ldots, 2$ are used for interpolating the 1/8th, 2/8th, 3/8th, and 4/8th fractional positions for the chroma samples, respectively. Using symmetry for the 5/8th, 6/8th, and 7/8th fractional positions, the mirrored values of filter3[$1-i$], filter2[$1-i$], and filter1[$1-i$] with $i = -1, \ldots, 2$ are used, respectively.

3) *Merge Mode:* Motion information typically consists of the horizontal and vertical motion vector displacement values, one or two reference picture indices, and, in the case of prediction regions in B slices, an identification of which reference picture list is associated with each index. HEVC includes a merge mode to derive the motion information from spatially or temporally neighboring blocks. It is denoted as merge mode since it forms a merged region sharing all motion information.

The merge mode is conceptually similar to the direct and skip modes in H.264/MPEG-4 AVC. However, there are two important differences. First, it transmits index information to select one out of several available candidates, in a manner sometimes referred to as a motion vector competition scheme. It also explicitly identifies the reference picture list and reference picture index, whereas the direct mode assumes that these have some predefined values.

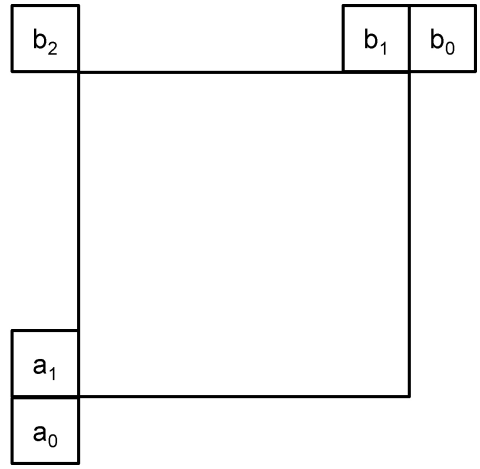

Fig. 8. Positions of spatial candidates of motion information.

The set of possible candidates in the merge mode consists of spatial neighbor candidates, a temporal candidate, and generated candidates. Fig. 8 shows the positions of five spatial candidates. For each candidate position, the availability is checked according to the order $\{a_1, b_1, b_0, a_0, b_2\}$. If the block located at the position is intrapicture predicted or the position is outside of the current slice or tile, it is considered as unavailable.

After validating the spatial candidates, two kinds of redundancy are removed. If the candidate position for the current PU would refer to the first PU within the same CU, the position is excluded, as the same merge could be achieved by a CU without splitting into prediction partitions. Furthermore, any redundant entries where candidates have exactly the same motion information are also excluded.

For the temporal candidate, the right bottom position just outside of the collocated PU of the reference picture is used if it is available. Otherwise, the center position is used instead. The way to choose the collocated PU is similar to that of prior standards, but HEVC allows more flexibility by transmitting an index to specify which reference picture list is used for the collocated reference picture.

One issue related to the use of the temporal candidate is the amount of the memory to store the motion information of the reference picture. This is addressed by restricting the granularity for storing the temporal motion candidates to only the resolution of a 16×16 luma grid, even when smaller PB structures are used at the corresponding location in the reference picture. In addition, a PPS-level flag allows the encoder to disable the use of the temporal candidate, which is useful for applications with error-prone transmission.

The maximum number of merge candidates C is specified in the slice header. If the number of merge candidates found (including the temporal candidate) is larger than C, only the first $C - 1$ spatial candidates and the temporal candidate are retained. Otherwise, if the number of merge candidates identified is less than C, additional candidates are generated until the number is equal to C. This simplifies the parsing and makes it more robust, as the ability to parse the coded data is not dependent on merge candidate availability.

Nokia Exhibit 2012, p. 12
Amazon.com v. Nokia
IPR2024-00605

For B slices, additional merge candidates are generated by choosing two existing candidates according to a predefined order for reference picture list 0 and list 1. For example, the first generated candidate uses the first merge candidate for list 0 and the second merge candidate for list 1. HEVC specifies a total of 12 predefined pairs of two in the following order in the already constructed merge candidate list as (0, 1), (1, 0), (0, 2), (2, 0), (1, 2), (2, 1), (0, 3), (3, 0), (1, 3), (3, 1), (2, 3), and (3, 2). Among them, up to five candidates can be included after removing redundant entries.

When the slice is a P slice or the number of merge candidates is still less than C, zero motion vectors associated with reference indices from zero to the number of reference pictures minus one are used to fill any remaining entries in the merge candidate list.

In HEVC, the skip mode is treated as a special case of the merge mode when all coded block flags are equal to zero. In this specific case, only a skip flag and the corresponding merge index are transmitted to the decoder. The B-direct mode of H.264/MPEG-4 AVC is also replaced by the merge mode, since the merge mode allows all motion information to be derived from the spatial and temporal motion information of the neighboring blocks with residual coding.

4) *Motion Vector Prediction for Nonmerge Mode:* When an interpicture-predicted CB is not coded in the skip or merge modes, the motion vector is differentially coded using a motion vector predictor. Similar to the merge mode, HEVC allows the encoder to choose the motion vector predictor among multiple predictor candidates. The difference between the predictor and the actual motion vector and the index of the candidate are transmitted to the decoder.

Only two spatial motion candidates are chosen according to the availability among five candidates in Fig. 8. The first spatial motion candidate is chosen from the set of left positions $\{a_0, a_1\}$ and the second one from the set of above positions $\{b_0, b_1, b_2\}$ according to their availabilities, while keeping the searching order as indicated in the two sets.

HEVC only allows a much lower number of candidates to be used in the motion vector prediction process for the nonmerge case, since the encoder can send a coded difference to change the motion vector. Furthermore, the encoder needs to perform motion estimation, which is one of the most computationally expensive operations in the encoder, and complexity is reduced by allowing a small number of candidates.

When the reference index of the neighboring PU is not equal to that of the current PU, a scaled version of the motion vector is used. The neighboring motion vector is scaled according to the temporal distances between the current picture and the reference pictures indicated by the reference indices of the neighboring PU and the current PU, respectively. When two spatial candidates have the same motion vector components, one redundant spatial candidate is excluded.

When the number of motion vector predictors is not equal to two and the use of temporal MV prediction is not explicitly disabled, the temporal MV prediction candidate is included. This means that the temporal candidate is not used at all when two spatial candidates are available. Finally, a zero motion vector is included repeatedly until the number of motion vector prediction candidates is equal to two, which guarantees that the number of motion vector predictors is two. Thus, only a coded flag is necessary to identify which motion vector prediction is used in the case of nonmerge mode.

I. Transform, Scaling, and Quantization

HEVC uses transform coding of the prediction error residual in a similar manner as in prior standards. The residual block is partitioned into multiple square TBs, as described in Section IV-E. The supported transform block sizes are 4×4, 8×8, 16×16, and 32×32.

1) *Core Transform:* Two-dimensional transforms are computed by applying 1-D transforms in the horizontal and vertical directions. The elements of the core transform matrices were derived by approximating scaled DCT basis functions, under considerations such as limiting the necessary dynamic range for transform computation and maximizing the precision and closeness to orthogonality when the matrix entries are specified as integer values.

$$H = \begin{bmatrix}
64 & 64 & 64 & 64 & 64 & 64 & 64 & 64 & 64 & 64 & 64 & 64 & 64 & 64 & 64 & 64 \\
90 & 87 & 80 & 70 & 57 & 43 & 25 & 9 & -9 & -25 & -43 & -57 & -70 & -80 & -87 & 90 \\
89 & 75 & 50 & 18 & -18 & -50 & -75 & -89 & -89 & -75 & -50 & -18 & 18 & 50 & 75 & 89 \\
87 & 57 & 9 & -43 & -80 & -90 & -70 & -25 & 25 & 70 & 90 & 80 & 43 & -9 & -57 & -87 \\
83 & 36 & -36 & -83 & -83 & -36 & 36 & 83 & 83 & 36 & -36 & -83 & -83 & -36 & 36 & 83 \\
80 & 9 & -70 & -87 & -25 & 57 & 90 & 43 & -43 & -90 & -57 & 25 & 87 & 70 & -9 & -80 \\
75 & -18 & -89 & -50 & 50 & 89 & 18 & -75 & -75 & 18 & 89 & 50 & -50 & -89 & -18 & 75 \\
70 & -43 & -87 & 9 & 90 & 25 & -80 & -57 & 57 & 80 & -25 & -90 & -9 & 87 & 43 & -70 \\
64 & -64 & -64 & 64 & 64 & -64 & -64 & 64 & 64 & -64 & -64 & 64 & 64 & -64 & -64 & 64 \\
57 & -80 & -25 & 90 & -9 & -87 & 43 & 70 & -70 & -43 & 87 & 9 & -90 & 25 & 80 & -57 \\
50 & -89 & 18 & 75 & -75 & -18 & 89 & -50 & -50 & 89 & -18 & -75 & 75 & 18 & -89 & 50 \\
43 & -90 & 57 & 25 & -87 & 70 & 9 & -80 & 80 & -9 & -70 & 87 & -25 & -57 & 90 & -43 \\
36 & -83 & 83 & -36 & -36 & 83 & -83 & 36 & 36 & -83 & 83 & -36 & -36 & 83 & -83 & 36 \\
25 & -70 & 90 & -80 & 43 & 9 & -57 & 87 & -87 & 57 & -9 & -43 & 80 & -90 & 70 & -25 \\
18 & -50 & 75 & -89 & 89 & -75 & 50 & -18 & -18 & 50 & -75 & 89 & -89 & 75 & -50 & 18 \\
9 & -25 & 43 & -57 & 70 & -80 & 87 & -90 & 90 & -87 & 80 & -70 & 57 & -43 & 25 & -9
\end{bmatrix}.$$

Nokia Exhibit 2012, p. 13
Amazon.com v. Nokia
IPR2024-00605

For simplicity, only one integer matrix for the length of 32 points is specified, and subsampled versions are used for other sizes. For example, the matrix for the length-16 transform is as shown in the equation at the bottom of the previous page.

The matrices for the length-8 and length-4 transforms can be derived by using the first eight entries of rows 0, 2, 4, ..., and using the first four entries of rows 0, 4, 8, ..., respectively. Although the standard specifies the transform simply in terms of the value of a matrix, the values of the entries in the matrix were selected to have key symmetry properties that enable fast partially factored implementations with far fewer mathematical operations than an ordinary matrix multiplication, and the larger transforms can be constructed by using the smaller transforms as building blocks.

Due to the increased size of the supported transforms, limiting the dynamic range of the intermediate results from the first stage of the transformation is quite important. HEVC explicitly inserts a 7-b right shift and 16-b clipping operation after the first 1-D inverse transform stage of the transform (the vertical inverse transform stage) to ensure that all intermediate values can be stored in 16-b memory (for 8-b video decoding).

2) *Alternative 4 × 4 Transform:* For the transform block size of 4×4, an alternative integer transform derived from a DST is applied to the luma residual blocks for intrapicture prediction modes, with the transform matrix

$$H = \begin{bmatrix} 29 & 55 & 74 & 84 \\ 74 & 74 & 0 & -74 \\ 84 & -29 & -74 & 55 \\ 55 & -84 & 74 & -29 \end{bmatrix}.$$

The basis functions of the DST better fit the statistical property that the residual amplitudes tend to increase as the distance from the boundary samples that are used for prediction becomes larger. In terms of complexity, the 4×4 DST-style transform is not much more computationally demanding than the 4×4 DCT-style transform, and it provides approximately 1% bit-rate reduction in intrapicture predictive coding.

The usage of the DST type of transform is restricted to only 4×4 luma transform blocks, since for other cases the additional coding efficiency improvement for including the additional transform type was found to be marginal.

3) *Scaling and Quantization:* Since the rows of the transform matrix are close approximations of values of uniformly scaled basis functions of the orthonormal DCT, the prescaling operation that is incorporated in the dequantization of H.264/MPEG-4 AVC is not needed in HEVC. This avoidance of frequency-specific basis function scaling is useful in reducing the intermediate memory size, especially when considering that the size of the transform can be as large as 32×32.

For quantization, HEVC uses essentially the same URQ scheme controlled by a quantization parameter (QP) as in H.264/MPEG-4 AVC. The range of the QP values is defined from 0 to 51, and an increase by 6 doubles the quantization step size such that the mapping of QP values to step sizes is approximately logarithmic. Quantization scaling matrices are also supported.

To reduce the memory needed to store frequency-specific scaling values, only quantization matrices of sizes 4×4 and 8×8 are used. For the larger transformations of 16×16 and 32×32 sizes, an 8×8 scaling matrix is sent and is applied by sharing values within 2×2 and 4×4 coefficient groups in frequency subspaces—except for values at DC (zero-frequency) positions, for which distinct values are sent and applied.

J. Entropy Coding

HEVC specifies only one entropy coding method, CABAC [13] rather than two as in H.264/MPEG-4 AVC. The core algorithm of CABAC is unchanged, and the following subsections present several aspects of how it is used in the HEVC design.

1) *Context Modeling:* Appropriate selection of context modeling is known to be a key factor to improve the efficiency of CABAC coding. In HEVC, the splitting depth of the coding tree or transform tree is exploited to derive the context model indices of various syntax elements in addition to the spatially neighboring ones used in H.264/AVC. For example, the syntax element *skip_flag* specifying whether the CB is coded as interpicture predictively skipped and the syntax element *split_coding_unit_flag* specifying whether the CB is further split are coded by using context models based on the spatially neighboring information. The syntax element *split_transform_flag* specifying whether the TB is further split and three syntax elements specifying non-zero transform coefficients for each color component, *cbf_luma*, *cbf_cb* and *cbf_cr*, are coded based on the splitting depth of the transform tree. Although the number of contexts used in HEVC is substantially less than in H.264/MPEG-4 AVC, the entropy coding design actually provides better compression than would a straightforward extension of the H.264/MPEG-4 AVC scheme. Moreover, more extensive use is made in HEVC of the bypass mode of CABAC operation to increase throughput by reducing the amount of data that needs to be coded using CABAC contexts. Dependences between coded data are also carefully considered to enable further throughput maximization.

2) *Adaptive Coefficient Scanning:* Coefficient scanning is performed in 4×4 subblocks for all TB sizes (i.e., using only one coefficient region for the 4×4 TB size, and using multiple 4×4 coefficient regions within larger transform blocks). Three coefficient scanning methods, diagonal up-right, horizontal, and vertical scans as shown in Fig. 9, are selected implicitly for coding the transform coefficients of 4×4 and 8×8 TB sizes in intrapicture-predicted regions. The selection of the coefficient scanning order depends on the directionalities of the intrapicture prediction. The vertical scan is used when the prediction direction is close to horizontal and the horizontal scan is used when the prediction direction is close to vertical. For other prediction directions, the diagonal up-right scan is used.

For the transform coefficients in interpicture prediction modes of all block sizes and for the transform coefficients of 16×16 or 32×32 intrapicture prediction, the 4×4 diagonal up-right scan is exclusively applied to subblocks of transform coefficients.

Nokia Exhibit 2012, p. 14
Amazon.com v. Nokia
IPR2024-00605

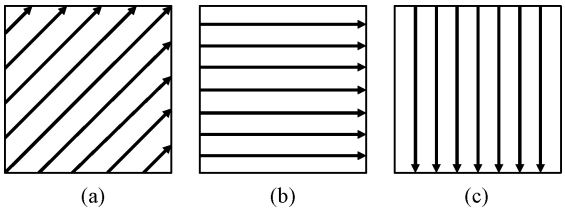

Fig. 9. Three coefficient scanning methods in HEVC. (a) Diagonal up-right scan. (b) Horizontal scan. (c) Vertical scan.

3) *Coefficient Coding:* Similar to H.264/MPEG-4 AVC, HEVC transmits the position of the last nonzero transform coefficient, a significance map, sign bits and levels for the transform coefficients. However, various changes for each part have been made, especially for better handling of the significantly increased size of the TBs.

First, the horizontal and vertical frequency coordinate positions of the last nonzero coefficient are coded for the TB before sending the significance maps of 4×4 subblocks that indicate which other transform coefficients have nonzero values, rather than sending a series of last-coefficient identification flags that are interleaved with the significance map as done in H.264/MPEG-4 AVC.

The significance map is derived for significance groups relating to the fixed size 4×4 subblocks. For all groups having at least one coefficient preceding the last coefficient position, a significant group flag specifying a nonzero coefficient group is transmitted, followed by coefficient significance flags for each coefficient prior to the indicated position of the last significant coefficient. The context models for the significant coefficient flags are dependent on the coefficient position as well as the values of the right and the bottom significant group flags.

A method known as sign data hiding is used for further compression improvement. The sign bits are coded conditionally based on the number and positions of coded coefficients. When sign data hiding is used and there are at least two nonzero coefficients in a 4×4 subblock and the difference between the scan positions of the first and the last nonzero coefficients is greater than 3, the sign bit of the first nonzero coefficient is inferred from the parity of the sum of the coefficient amplitudes. Otherwise, the sign bit is coded normally. At the encoder side, this can be implemented by selecting one coefficient with an amplitude close to the boundary of a quantization interval to be forced to use the adjacent quantization interval in cases where the parity would not otherwise indicate the correct sign of the first coefficient. This allows the sign bit to be encoded at a lower cost (in rate-distortion terms) than if it were coded separately—by giving the encoder the freedom to choose which transform coefficient amplitude can be altered with the lowest rate-distortion cost.

For each position where the corresponding significant coefficient flag is equal to one, two flags specifying whether the level value is greater than one or two are coded, and then the remaining level value is coded depending on those two values.

K. In-Loop Filters

In HEVC, two processing steps, namely a deblocking filter (DBF) followed by an SAO filter, are applied to the reconstructed samples before writing them into the decoded picture buffer in the decoder loop. The DBF is intended to reduce the blocking artifacts due to block-based coding. The DBF is similar to the DBF of the H.264/MPEG-4 AVC standard, whereas SAO is newly introduced in HEVC. While the DBF is only applied to the samples located at block boundaries, the SAO filter is applied adaptively to all samples satisfying certain conditions, e.g., based on gradient. During the development of HEVC, it had also been considered to operate a third processing step called the adaptive loop filter (ALF) after the SAO filter; however, the ALF feature was not included in the final design.

1) *Deblocking Filter:* The deblocking filter is applied to all samples adjacent to a PU or TU boundary except the case when the boundary is also a picture boundary, or when deblocking is disabled across slice or tile boundaries (which is an option that can be signaled by the encoder). It should be noted that both PU and TU boundaries should be considered since PU boundaries are not always aligned with TU boundaries in some cases of interpicture-predicted CBs. Syntax elements in the SPS and slice headers control whether the deblocking filter is applied across the slice and tile boundaries.

Unlike H.264/MPEG-4 AVC, where the deblocking filter is applied on a 4×4 sample grid basis, HEVC only applies the deblocking filter to the edges that are aligned on an 8×8 sample grid, for both the luma and chroma samples. This restriction reduces the worst-case computational complexity without noticeable degradation of the visual quality. It also improves parallel-processing operation by preventing cascading interactions between nearby filtering operations.

The strength of the deblocking filter is controlled by the values of several syntax elements similar to the scheme in H.264/MPEG-4 AVC, but only three strengths are used rather than five. Given that P and Q are two adjacent blocks with a common 8×8 grid boundary, the filter strength of 2 is assigned when one of the blocks is intrapicture predicted. Otherwise, the filter strength of 1 is assigned if any of the following conditions is satisfied.

1) P or Q has at least one nonzero transform coefficient.
2) The reference indices of P and Q are not equal.
3) The motion vectors of P and Q are not equal.
4) The difference between a motion vector component of P and Q is greater than or equal to one integer sample.

If none of the above conditions is met, the filter strength of 0 is assigned, which means that the deblocking process is not applied.

According to the filter strength and the average quantization parameter of P and Q, two thresholds, t_C and β, are determined from predefined tables. For luma samples, one of three cases, no filtering, strong filtering, and weak filtering, is chosen based on β. Note that this decision is shared across four luma rows or columns using the first and the last rows or columns to reduce the computational complexity.

There are only two cases, no filtering and normal filtering, for chroma samples. Normal filtering is applied only when the filter strength is greater than one. The filtering process is then performed using the control variables t_C and β.

Nokia Exhibit 2012, p. 15
Amazon.com v. Nokia
IPR2024-00605

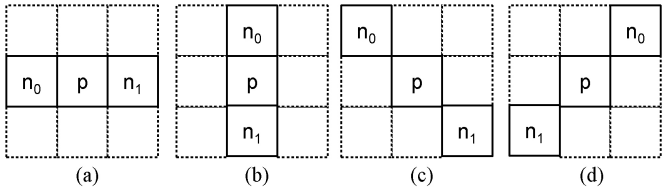

Fig. 10. Four gradient patterns used in SAO. Sample labeled "p" indicates a center sample to be considered. Two samples labeled "n_0" and "n_1" specify two neighboring samples along the (a) horizontal (sao_eo_class = 0), (b) vertical (sao_eo_class = 1), (c) 135° diagonal (sao_eo_class = 2), and (d) 45° (sao_eo_class = 3) gradient patterns.

In HEVC, the processing order of the deblocking filter is defined as horizontal filtering for vertical edges for the entire picture first, followed by vertical filtering for horizontal edges. This specific order enables either multiple horizontal filtering or vertical filtering processes to be applied in parallel threads, or can still be implemented on a CTB-by-CTB basis with only a small processing latency.

2) *SAO:* SAO is a process that modifies the decoded samples by conditionally adding an offset value to each sample after the application of the deblocking filter, based on values in look-up tables transmitted by the encoder. SAO filtering is performed on a region basis, based on a filtering type selected per CTB by a syntax element sao_type_idx. A value of 0 for sao_type_idx indicates that the SAO filter is not applied to the CTB, and the values 1 and 2 signal the use of the band offset and edge offset filtering types, respectively.

In the band offset mode specified by sao_type_idx equal to 1, the selected offset value directly depends on the sample amplitude. In this mode, the full sample amplitude range is uniformly split into 32 segments called bands, and the sample values belonging to four of these bands (which are consecutive within the 32 bands) are modified by adding transmitted values denoted as band offsets, which can be positive or negative. The main reason for using four consecutive bands is that in the smooth areas where banding artifacts can appear, the sample amplitudes in a CTB tend to be concentrated in only few of the bands. In addition, the design choice of using four offsets is unified with the edge offset mode of operation which also uses four offset values.

In the edge offset mode specified by sao_type_idx equal to 2, a syntax element sao_eo_class with values from 0 to 3 signals whether a horizontal, vertical or one of two diagonal gradient directions is used for the edge offset classification in the CTB. Fig. 10 depicts the four gradient patterns used for the respective sao_eo_class in this mode. Each sample in the CTB is classified into one of five EdgeIdx categories by comparing the sample value p located at some position with the values n0 and n1 of two samples located at neighboring positions as shown in Table IV. This classification is done for each sample based on decoded sample values, so no additional signaling is required for the EdgeIdx classification. Depending on the EdgeIdx category at the sample position, for EdgeIdx categories from 1 to 4, an offset value from a transmitted look-up table is added to the sample value. The offset values are always positive for categories 1 and 2 and negative for categories 3 and 4 - thus the filter generally has a smoothing effect in the edge offset mode.

TABLE IV
SAMPLE EDGEIDX CATEGORIES IN SAO EDGE CLASSES

EdgeIdx	Condition	Meaning
0	Cases not listed below	Monotonic area
1	$p < n_0$ and $p < n_1$	Local min
2	$p < n_0$ and $p = n_1$ or $p < n_1$ and $p = n_0$	Edge
3	$p > n_0$ and $p = n_1$ or $p > n_1$ and $p = n_0$	Edge
4	$p > n_0$ and $p > n_1$	Local max

Thus, for SAO types 1 and 2, a total of four amplitude offset values are transmitted to the decoder for each CTB. For type 1, the sign is also encoded. The offset values and related syntax elements such as sao_type_idx and sao_eo_class are determined by the encoder - typically using criteria that optimize rate-distortion performance. The SAO parameters can be indicated to be inherited from the left or above CTB using a merge flag to make the signaling efficient. In summary, SAO is a nonlinear filtering operation which allows additional refinement of the reconstructed signal, and it can enhance the signal representation in both smooth areas and around edges.

L. Special Coding Modes

HEVC defines three special coding modes, which can be invoked at the CU level or the TU level.

1) In I_PCM mode, the prediction, transform, quantization and entropy coding are bypassed, and the samples are directly represented by a pre-defined number of bits. Its main purpose is to avoid excessive consumption of bits when the signal characteristics are extremely unusual and cannot be properly handled by hybrid coding (e.g., noise-like signals).
2) In lossless mode, the transform, quantization, and other processing that affects the decoded picture (SAO and deblocking filters) are bypassed, and the residual signal from inter- or intrapicture prediction is directly fed into the entropy coder (using the same neighborhood contexts that would usually be applied to the quantized transform coefficients). This allows mathematically lossless reconstruction, which is achieved without defining any additional coding tools.
3) In transform skipping mode, only the transform is bypassed. This primarily improves compression for certain types of video content such as computer-generated images or graphics mixed with camera-view content (e.g., scrolling text). This mode can be applied to TBs of 4×4 size only.

SAO and deblocking filtering are not applied to lossless mode regions, and a flag controls whether they are applied to I_PCM regions.

V. PROFILES, TIERS, AND LEVELS

A. Profile, Level, and Tier Concepts

Profiles, tiers, and levels specify conformance points for implementing the standard in an interoperable way across various applications that have similar functional requirements. A profile defines a set of coding tools or algorithms that can be used in generating a conforming bitstream, whereas a level places

Nokia Exhibit 2012, p. 16
Amazon.com v. Nokia
IPR2024-00605

constraints on certain key parameters of the bitstream, corresponding to decoder processing load and memory capabilities. Level restrictions are established in terms of maximum sample rate, maximum picture size, maximum bit rate, minimum compression ratio and capacities of the DPB, and the coded picture buffer (CPB) that holds compressed data prior to its decoding for data flow management purposes. In the design of HEVC, it was determined that some applications existed that had requirements that differed only in terms of maximum bit rate and CPB capacities. To resolve this issue, two tiers were specified for some levels—a Main Tier for most applications and a High Tier for use in the most demanding applications.

A decoder conforming to a certain tier and level is required to be capable of decoding all bitstreams that conform to the same tier or the lower tier of that level or any level below it. Decoders conforming to a specific profile must support all features in that profile. Encoders are not required to make use of any particular set of features supported in a profile, but are required to produce conforming bitstreams, i.e., bitstreams that obey the specified constraints that enable them to be decoded by conforming decoders.

B. The HEVC Profile and Level Definitions

Only three profiles targetting different application requirements, called the Main, Main 10, and Main Still Picture profiles, are foreseen to be finalized by January 2013. Minimizing the number of profiles provides a maximum amount of interoperability between devices, and is further justified by the fact that traditionally separate services, such as broadcast, mobile, streaming, are converging to the point where most devices should become usable to support all of them. The three drafted profiles consist of the coding tools and high-layer syntax described in the earlier sections of this paper, while imposing the following restrictions.

1) Only 4:2:0 chroma sampling is supported.
2) When an encoder encodes a picture using multiple tiles, it cannot also use wavefront parallel processing, and each tile must be at least 256 luma samples wide and 64 luma samples tall.
3) In the Main and Main Still Picture profiles, only a video precision of 8 b per sample is supported, while the Main 10 profile supports up to 10 b per sample.
4) In the Main Still Picture profile, the entire bitstream must contain only one coded picture (and thus interpicture prediction is not supported).

Currently, the definition of 13 levels is planned to be included in the first version of the standard as shown in Table V, ranging from levels that support only relatively small picture sizes such as a luma picture size of 176×144 (sometimes called a quarter common intermediate format) to picture sizes as large as 7680×4320 (often called 8k×4k). The picture width and height are each required to be less than or equal to $\sqrt{8 \cdot \text{MaxLumaPS}}$, where MaxLumaPS is the maximum luma picture size as shown in Table V (to avoid the problems for decoders that could be involved with extreme picture shapes).

There are two tiers supported for eight of these levels (level 4 and higher). The CPB capacity is equal to the maximum bit rate times 1 s for all levels except level 1, which has a (higher) CPB capacity of 350 000 b. The specified maximum DPB capacity in each level is six pictures when operating at the maximum picture size supported by the level (including both the current picture and all other pictures that are retained in the decoder at any point in time for reference or output purposes). When operating with a smaller picture size than the maximum size supported by the level, the DPB picture storage capacity can increase to as many as 16 pictures (depending on the particular selected picture size). Level-specific constraints are also specified for the maximum number of tiles used horizontally and vertically within each picture and the maximum number of tiles used per second.

TABLE V
LEVEL LIMITS FOR THE MAIN PROFILE

Level	Max Luma Picture Size (samples)	Max Luma Sample Rate (samples/s)	Main Tier Max Bit Rate (1000 bits/s)	High Tier Max Bit Rate (1000 bits/s)	Min Comp. Ratio
1	36 864	552 960	128	–	2
2	122 880	3 686 400	1500	–	2
2.1	245 760	7 372 800	3000	–	2
3	552 960	16 588 800	6000	–	2
3.1	983 040	33 177 600	10 000	–	2
4	2 228 224	66 846 720	12 000	30 000	4
4.1	2 228 224	133 693 440	20 000	50 000	4
5	8 912 896	267 386 880	25 000	100 000	6
5.1	8 912 896	534 773 760	40 000	160 000	8
5.2	8 912 896	1 069 547 520	60 000	240 000	8
6	35 651 584	1 069 547 520	60 000	240 000	8
6.1	35 651 584	2 139 095 040	120 000	480 000	8
6.2	35 651 584	4 278 190 080	240 000	800 000	6

VI. HISTORY AND STANDARDIZATION PROCESS

After the finalization of the H.264/MPEG-4 AVC High Profile in mid-2004, both ITU-T VCEG and ISO/IEC MPEG have been trying to identify when the next major advances in coding efficiency would become ready for standardization. VCEG began studying potential advances in 2004, began identifying certain key technology areas (KTAs) for study in early 2005, and developed a common KTA software codebase for this paper [14]. Various technologies were proposed and verified using the KTA software codebase, which was developed from the H.264/MPEG-4 AVC reference software known as the joint model (JM).

From 2005 to 2008, MPEG began exploration activities toward significant coding efficiency improvements as well, organized several workshops, and issued a "call for evidence" [15] of such advances in April 2009. Expert viewing tests were conducted to evaluate submissions of responses to the call.

From their respective investigations, it was agreed that there were sufficient technologies with the potential to improve the coding efficiency significantly, compared to the existing video coding standards. The Joint Collaborative Team on Video Coding (JCT-VC) was planned to be established by both groups in January 2010, and a joint call for proposals (CfP) on video compression technology [16] was issued by the same

Nokia Exhibit 2012, p. 17
Amazon.com v. Nokia
IPR2024-00605

TABLE VI
STRUCTURE OF CODING TOOLS ASSOCIATED WITH HIGH EFFICIENCY AND LOW COMPLEXITY CONFIGURATIONS OF HM 1

Functionality	High Efficiency	Low Complexity
CTB/CU structure	Tree structure from 8×8 to 64×64	
PU structure	Square and symmetric shapes	
TU structure	Three-level tree structure	Two-level tree structure
Transform	Integer transforms from four to 32 points	
Intra prediction	33 angular modes with DC mode	
Luma interpolation	12-tap separable	Six-tap directional
Chroma interpolation	Bilinear	
MV prediction	Spatial CU merging/AMVP	
Entropy coding	CABAC	Event-based VLC
Deblocking filter	Enabled	
Adaptive loop filter	Enabled	Disabled

time to identify the initial technologies that would serve as a basis of future standardization activities.

At its first meeting in April 2010, the JCT-VC established the HEVC project name, studied the proposals submitted in response to the CfP, and established the first version of a test model under consideration (TMuC) [17], which was produced collectively from elements of several promising proposals. A corresponding software codebase was implemented after this meeting. The technology submitted in several of the key proposal contributions was previously discussed in a special section of the IEEE TRANSACTIONS ON CIRCUITS AND SYSTEMS FOR VIDEO TECHNOLOGY [18].

Although the TMuC showed significant coding efficiency improvements compared to prior standards, it had several redundant coding tools in each functional block of the video compression system, primarily due to the fact that the TMuC was a collective design from various contributions. During the second JCT-VC meeting in July 2010, the process began of selecting the minimal necessary set of coding tools for each functional block by thoroughly testing each component of the TMuC.

Based on the reported results of the exhaustive component testing [20], an HEVC test model version 1 (HM 1) [21] and the corresponding HEVC working draft specification version 1 (WD 1) [22] were produced as outputs of the third JCT-VC meeting in October 2010. Compared to the prior TMuC design, HM 1 was simplified greatly by removing coding tools that showed only marginal benefits relative to their computational complexity.

In several subsequent studies, the coding tools of the HM were classified into two categories called the high efficiency and low complexity configurations. Two corresponding test scenarios for verifying future contributions in the JCT-VC were also established. Table VI summarizes the HM 1 coding tools for the high efficiency and low complexity configurations.

From the fourth to the eleventh JCT-VC meetings, not just coding efficiency improvements, but many other aspects including computational complexity reduction, unification of various coding tools, and parallel friendly design were investigated, and the HEVC design was updated accordingly, until the current status of draft standard, as described in this paper, was reached. In this context, it also turned out that the differentiation for low complexity and high efficiency was no longer necessary became possible to define the unified main profile. Table VII provides a summary of coding tools of the high efficiency configuration in HM 1 and the current specification of HEVC.

TABLE VII
SUMMARY OF CODING TOOLS OF HIGH EFFICIENCY CONFIGURATION IN HM 1 AND HEVC

Functionality	HM 1 High Efficiency	HEVC (draft 9)
CTU structure	Tree structure from 8×8 to 64×64	Tree structure from 8×8 to 64×64
PU structure	Square and symmetric	Square, symmetric and asymmetric (only square for intra)
TU structure	Tree structure of square TUs	Tree structure of square TUs
Core transform	Integer transforms from 4 to 32 points (full factorization)	Integer transforms from 4 to 32 points (partially factorable)
Alternative transform	n/a	Integer DST type for 4×4
Intra prediction	33 angular modes with DC mode	33 angular modes with planar and DC modes
Luma interpolation	12-tap separable	8-tap/7-tap separable
Chroma interpolation	Bilinear	4-tap separable
MV prediction	AMVP	AMVP
MC region merging	Spatial CU merging	PU merging
Entropy coding	CABAC	CABAC
Deblocking filter	Nonparallel	Parallel
Sample adaptive offset	n/a	Enabled
Adaptive loop filter	Multiple shapes	n/a
Dedicated tools for parallel processing	Slices	Slices, tiles, wavefronts, and dependent slice segments

At the eighth JCT-VC meeting in February 2012, the draft version 6 of HEVC standard was produced, which was subsequently balloted as the ISO/IEC Committee Draft of the HEVC standard. The tenth JCT-VC Meeting in July 2012 released the draft version 8 for a Draft International Standard ballot, and the finalized text for Consent in ITU-T and Final Draft International Standard in ISO/IEC is expected to be produced in January 2013.

Future extensions of HEVC, which are already being explored and prepared by the JCT-VC's parent bodies, are likely to include extended-range formats with increased bit depth and enhanced color component sampling, scalable coding, and 3-D/stereo/multi-view video coding (the latter including the encoding of depth maps for use with advanced 3-D displays).

VII. CONCLUSION

The emerging HEVC standard has been developed and standardized collaboratively by both the ITU-T VCEG and ISO/IEC MPEG organizations. HEVC represents a number of advances in video coding technology. Its video coding layer design is based on conventional block-based motion-compensated hybrid video coding concepts, but with some important differences relative to prior standards.

Nokia Exhibit 2012, p. 18
Amazon.com v. Nokia
IPR2024-00605

When used well together, the features of the new design provide approximately a 50% bit-rate savings for equivalent perceptual quality relative to the performance of prior standards (especially for a high-resolution video). For more details on compression performance, please refer to [23]. Implementation complexity analysis is outside the scope of this paper; however, the decoder implementation complexity of HEVC overall is not a major burden (e.g., relative to H.264/MPEG-4 AVC) using modern processing technology, and encoder complexity is also manageable. For more details on implementation complexity, please refer to [24].

Further information on and documents from the project are available in the JCT-VC document management system (http://phenix.int-evry.fr/jct/).

ACKNOWLEDGMENT

The authors would like to thank the experts of ITU-T VCEG, ISO/IEC MPEG, and the ITU-T/ISO/IEC Joint Collaborative Team on Video Coding for their contributions.

REFERENCES

[1] B. Bross, W.-J. Han, G. J. Sullivan, J.-R. Ohm, and T. Wiegand, *High Efficiency Video Coding (HEVC) Text Specification Draft 9*, document JCTVC-K1003, ITU-T/ISO/IEC Joint Collaborative Team on Video Coding (JCT-VC), Oct. 2012.

[2] *Video Codec for Audiovisual Services at px64 kbit/s*, ITU-T Rec. H.261, version 1: Nov. 1990, version 2: Mar. 1993.

[3] *Video Coding for Low Bit Rate Communication*, ITU-T Rec. H.263, Nov. 1995 (and subsequent editions).

[4] *Coding of Moving Pictures and Associated Audio for Digital Storage Media at up to About 1.5 Mbit/s—Part 2: Video*, ISO/IEC 11172-2 (MPEG-1), ISO/IEC JTC 1, 1993.

[5] *Coding of Audio-Visual Objects—Part 2: Visual*, ISO/IEC 14496-2 (MPEG-4 Visual version 1), ISO/IEC JTC 1, Apr. 1999 (and subsequent editions).

[6] *Generic Coding of Moving Pictures and Associated Audio Information—Part 2: Video*, ITU-T Rec. H.262 and ISO/IEC 13818-2 (MPEG 2 Video), ITU-T and ISO/IEC JTC 1, Nov. 1994.

[7] *Advanced Video Coding for Generic Audio-Visual Services*, ITU-T Rec. H.264 and ISO/IEC 14496-10 (AVC), ITU-T and ISO/IEC JTC 1, May 2003 (and subsequent editions).

[8] H. Samet, "The quadtree and related hierarchical data structures," *Comput. Survey*, vol. 16, no. 2, pp. 187–260, Jun. 1984.

[9] T. Wiegand, G. J. Sullivan, G. Bjøntegaard, and A. Luthra, "Overview of the H.264/AVC video coding standard," *IEEE Trans. Circuits Syst. Video Technol.*, vol. 13, no. 7, pp. 560–576, Jul. 2003.

[10] S. Wenger, "H.264/AVC over IP," *IEEE Trans. Circuits Syst. Video Technol.*, vol. 13, no. 7, pp. 645–656, Jul. 2003.

[11] T. Stockhammer, M. M. Hannuksela, and T. Wiegand, "H.264/AVC in wireless environments," *IEEE Trans. Circuits Syst. Video Technol.*, vol. 13, no. 7, pp. 657–673, Jul. 2003.

[12] H. Schwarz, D. Marpe, and T. Wiegand, "Overview of the scalable video coding extension of the H.264/AVC standard," *IEEE Trans. Circuits Syst. Video Technol.*, vol. 17, no. 9, pp. 1103–1120, Sep. 2007.

[13] D. Marpe, H. Schwarz, and T. Wiegand, "Context-adaptive binary arithmetic coding in the H.264/AVC video compression standard," *IEEE Trans. Circuits Syst. Video Technol.*, vol. 13, no. 7, pp. 620–636, Jul. 2003.

[14] G. J. Sullivan, *Meeting Report for 26th VCEG Meeting*, ITU-T SG16/Q6 document VCEG-Z01, Apr. 2005.

[15] *Call for Evidence on High-Performance Video Coding (HVC)*, MPEG document N10553, ISO/IEC JTC 1/SC 29/WG 11, Apr. 2009.

[16] *Joint Call for Proposals on Video Compression Technology*, ITU-T SG16/Q6 document VCEG-AM91 and ISO/IEC MPEG document N11113, ITU-T and ISO/IEC JTC 1, Jan. 2010.

[17] *Test Model Under Consideration*, ITU-T/ISO/IEC Joint Collaborative Team on Video Coding (JCT-VC) document JCTVC-A205, ITU-T and ISO/IEC JTC 1, Apr. 2010.

[18] T. Wiegand, J.-R. Ohm, G. J. Sullivan, W.-J. Han, R. Joshi, T. K. Tan, and K. Ugur, "Special section on the joint call for proposals on High Efficiency Video Coding (HEVC) standardization," *IEEE Trans. Circuits Syst. Video Technol.*, vol. 20, no. 12, pp. 1661–1666, Dec. 2010.

[19] K. McCann, *Tool Experiment 12: Evaluation of TMuC Tools*, ITU-T/ISO/IEC Joint Collaborative Team on Video Coding (JCT-VC) document JCTVC-B312, Jul. 2010.

[20] K. McCann, *Summary of Evaluation of TMuC Tools in TE12*, ITU-T/ISO/IEC Joint Collaborative Team on Video Coding (JCT-VC) document JCTVC-C225, Oct. 2010.

[21] K. McCann, B. Bross, S. Sekiguchi, and W.-J. Han, *Encoder-Side Description of HEVC Test Model (HM)*, ITU-T/ISO/IEC Joint Collaborative Team on Video Coding (JCT-VC) document JCTVC-C402, Oct. 2010.

[22] T. Wiegand, W.-J. Han, B. Bross, J.-R. Ohm, and G. J. Sullivan, *Working Draft 1 of High Efficiency Video Coding*, ITU-T/ISO/IEC Joint Collaborative Team on Video Coding (JCT-VC) document JCTVC-C402, Oct. 2010.

[23] J.-R. Ohm, G. J. Sullivan, H. Schwarz, T. K. Tan, and T. Wiegand, "Comparison of the coding efficiency of video coding standards—Including High Efficiency Video Coding (HEVC)," *IEEE Trans. Circuits Syst. Video Technol.*, vol. 22, no. 12, pp. 1668–1683, Dec. 2012.

[24] F. Bossen, B. Bross, K. Sühring, and D. Flynn, "HEVC complexity and implementation analysis," *IEEE Trans. Circuits Syst. Video Technol.*, vol. 22, no. 12, pp. 1684–1695, Dec. 2012.

Gary J. Sullivan (S'83–M'91–SM'01–F'06) received the B.S. and M.Eng. degrees in electrical engineering from the University of Louisville, Louisville, KY, in 1982 and 1983, respectively, and the Ph.D. and Engineers degrees in electrical engineering from the University of California, Los Angeles, in 1991.

He has been a long-standing Chairman or Co-Chairman of various video and image coding standardization activities in ITU-T and ISO/IEC. He is best known for leading the development of the ITU-T H.264|ISO/IEC 14496-10 MPEG-4 Advanced Video Coding standard and its Scalable Video Coding and 3-D/Stereo/Multiview Video Coding extensions. He is a Video/Image Technology Architect with the Windows Division, Microsoft Corporation. With Microsoft Corporation, he has been the Originator and Lead Designer of the DirectX Video Acceleration video decoding feature of the Microsoft Windows operating system. His current research interests and areas of publication include image and video compression, rate-distortion optimization, motion estimation and compensation, scalar and vector quantization, and loss resilient video coding.

Dr. Sullivan has received the IEEE Masaru Ibuka Consumer Electronics Award, the IEEE Consumer Electronics Engineering Excellence Award, the INCITS Technical Excellence Award, the IMTC Leadership Award, and the University of Louisville J. B. Speed Professional Award in Engineering. The team efforts that he has led have been recognized by the ATAS Primetime Emmy Engineering Award and by a pair of NATAS Technology and Engineering Emmy Awards. He is a fellow of the SPIE.

Jens-Rainer Ohm (M'92) received the Dipl.-Ing., Dr.-Ing., and Habil. degrees from the Technical University of Berlin (TUB), Berlin, Germany, in 1985, 1990, and 1997, respectively.

From 1985 to 1995, he was a Research Associate with the Institute of Telecommunication, TUB. From 1992 to 2000, he has served as a Lecturer on digital image processing, coding and transmission at TUB. From 1996 to 2000, he was a Project Coordinator with the Heinrich Hertz Institute, Berlin. In 2000, he became a Full Professor and since then has been the Chair of the Institute of Communication Engineering, RWTH Aachen University, Aachen, Germany. His current research and teaching activities cover the areas of motion-compensated, stereoscopic and 3-D image processing, multimedia signal coding, transmission and content description, audio signal analysis, as well as fundamental topics of signal processing and digital

Nokia Exhibit 2012, p. 19
Amazon.com v. Nokia
IPR2024-00605

communication systems. He has authored textbooks on multimedia signal processing, analysis and coding, on communication engineering and signal transmission, as well as numerous papers in the fields mentioned above.

Dr. Ohm has been participating in the work of the Moving Picture Experts Group (MPEG) since 1998. He has been the Chair and Co-Chair of various standardization activities in video coding, namely, the MPEG Video Subgroup since 2002, the Joint Video Team of MPEG and ITU-T SG 16 VCEG from 2005 to 2009, and currently, the Joint Collaborative Team on Video Coding as well as the Joint Collaborative Team on 3-D Video Coding Extensions. For T-CSVT, he has served as an Associate Editor from 2001 to 2005. He is a member of various professional organizations, including VDE/ITG, EURASIP, and AES.

Woo-Jin Han (M'02) received the M.S. and Ph.D. degrees in computer science from the Korea Advanced Institute of Science and Technology, Daejeon, Korea, in 1997 and 2002, respectively.

He is currently a Professor with the Department of Software Design and Management, Gachon University, Seongnam, Korea. From 2003 to 2011, he was a Principal Engineer with the Multimedia Platform Laboratory, Digital Media and Communication Research and Development Center, Samsung Electronics, Suwon, Korea. Since 2003, he has contributed successfully to the ISO/IEC Moving Pictures Experts Group, Joint Video Team, and Joint Collaborative Team on Video Coding standardization efforts. His current research interests include high-efficiency video compression techniques, scalable video coding, multiview synthesis, and visual contents understanding.

Dr. Han was an editor of the HEVC video coding standard in 2010.

Thomas Wiegand (M'05–SM'08–F'11) received the Dipl.-Ing. degree in electrical engineering from the Technical University of Hamburg-Harburg, Germany, in 1995, and the Dr.-Ing. degree from the University of Erlangen-Nuremberg, Germany, in 2000.

He is currently a Professor with the Department of Electrical Engineering and Computer Science, Berlin Institute of Technology, Berlin, Germany, chairing the Image Communication Laboratory, and is jointly heading the Image Processing Department, Fraunhofer Institute for Telecommunications–Heinrich Hertz Institute, Berlin. He joined the Heinrich Hertz Institute in 2000 as the Head of the Image Communication Group, Image Processing Department. Since 1995, he has been an active participant in standardization for multimedia with successful submissions to ITU-T VCEG, ISO/IEC MPEG, 3GPP, DVB, and IETF. His current research interests include video processing and coding, multimedia transmission, and computer vision and graphics.

Dr. Wiegand was a recipient of the SPIE VCIP Best Student Paper Award in 1998, and the Fraunhofer Award and the ITG Award of the German Society for Information Technology in 2004. The projects that he co-chaired for development of the H.264/MPEG-4 AVC standard have been recognized by the 2008 ATAS Primetime Emmy Engineering Award and by a pair of NATAS Technology and Engineering Emmy Awards. In 2009, he received the Innovations Award of the Vodafone Foundation, the EURASIP Group Technical Achievement Award, and the Best Paper Award of the IEEE TRANSACTIONS ON CIRCUITS AND SYSTEMS FOR VIDEO TECHNOLOGY. In 2010, he received the Eduard Rhein Technology Award. In 2011, he received the Best Paper Award of EURASIP and the Karl Heinz Beckurts Award. In October 2000, he was appointed as the Associated Rapporteur of ITU-T VCEG. In December 2001, he was appointed as the Associated Rapporteur/Co-Chair of the JVT. In February 2002, he was appointed as the editor of the H.264/MPEG-4 AVC video coding standard and its extensions (FRExt and SVC). From 2005 to 2009, he was the Co-Chair of MPEG Video. He is a recipient of the 2012 IEEE Masaru Ibuka Technical Field Award.

Nokia Exhibit 2012, p. 20
Amazon.com v. Nokia
IPR2024-00605