PATENT ASSIGNMENT COVER SHEET

Electronic Version v1.1
Stylesheet Version v1.2

EPAS ID: PAT5264282

SUBMISSION TYPE:	NEW ASSIGNMENT
NATURE OF CONVEYANCE:	ASSIGNMENT

CONVEYING PARTY DATA

Name	Execution Date
WILINX CORPORATION	02/27/2015

RECEIVING PARTY DATA

Name:	NAVAND TECH CO
Street Address:	6540 LUSK BLVD, STE C259
City:	SAN DIEGO
State/Country:	CALIFORNIA
Postal Code:	92121

PROPERTY NUMBERS Total: 14

Property Type	Number
Patent Number:	7263342
Patent Number:	7271668
Patent Number:	7924802
Patent Number:	7289783
Patent Number:	7298183
Patent Number:	7304550
Patent Number:	7365617
Patent Number:	8169266
Patent Number:	7372335
Patent Number:	8179167
Patent Number:	7403048
Patent Number:	7477885
Patent Number:	7522898
Patent Number:	7941475

CORRESPONDENCE DATA

Fax Number:

Correspondence will be sent to the e-mail address first; if that is unsuccessful, it will be sent using a fax number, if provided; if that is unsuccessful, it will be sent via US Mail.

Phone: 858-449-0729

Email: ghobad@heidari.us

Correspondent Name:	NAVAND TECH CO
Address Line 1:	6540 LUSK BLVD, STE C259
Address Line 4:	SAN DIEGO, CALIFORNIA 92121

NAME OF SUBMITTER:	GHOBAD HEIDARI
SIGNATURE:	/GHOBAD HEIDARI/
DATE SIGNED:	12/04/2018
	This document serves as an Oath/Declaration (37 CFR 1.63).

Total Attachments: 2
source=PATENT ASSIGNMENT AGREEMENT-signed#page1.tif
source=PATENT ASSIGNMENT AGREEMENT-signed#page2.tif

PATENT ASSIGNMENT AGREEMENT

WiLinx Corporation ("Assignor") is the current owner of the U.S. Patents tabulated below (the "Patents"):

	Patent #	Patent Title	Grant Date
1	7,263,342	High frequency wireless receiver circuits and methods	August 28, 2007
2	7,271,668	Mixer circuits and methods with improved spectral purity	April 14, 2005
3	7,924,802	Wireless communication systems and methods	April 12, 2011
4	7,289,783	Mixer circuits and methods with matched bias currents	October 30, 2007
13	7,298,183	High frequency divider circuits and methods	June 2, 2005
5	7,304,550	Wideband attenuator circuits and methods	December 4, 2007
6	7,365,617	Wideband attenuator circuits and methods	April 29, 2008
7	8,169,266	Mixer circuits and methods	May 1, 2012
8	7,372,335	Wideband circuits and methods	May 13, 2008
11	8,179,167	Wide bandwidth fast hopping frequency synthesizer circuits and methods	May 15, 2012
12	7,403,048	Divider circuits and methods using in-phase and quadrature signals	June 1, 2005
9	7,477,885	DC offset cancellation circuits and methods	January 13, 2009
10	7,522,898	High frequency synthesizer circuits and methods	April 21, 2009
14	7,941,475	Programmable filter circuits and methods	May 10, 2011

Navand Tech, Co. ("Assignee") desires to acquire rights in and to the Patents.

Therefore, for valuable consideration, the receipt of which is acknowledged, Assignor assigns to Assignee 100% of Assignor's right, title and interest in the inventions and Patents to Assignee for the entire term of the Patent and any reissues or extensions and for the entire terms of any patents, reissues or extensions that may issue from foreign applications, divisions, continuations in whole or part or substitute applications filed claiming the benefit of the Patent. The right, title and interest conveyed in this Assignment is to be held and enjoyed by Assignee and Assignee's successors as fully and exclusively as it would have been held and enjoyed by Assignor had this assignment not been made.

Assignor further agrees to: (a) cooperate with Assignee in the protection of the patent rights and prosecution and protection of foreign counterparts; (b) execute, verify, acknowledge and deliver all such further papers, including patent applications and instruments of transfer; and (c) perform such other acts as Assignee lawfully may request to obtain or maintain the Patent and any and all applications and registrations for the invention in any and all countries.

Assignor hereby authorizes and requests the Commissioner of Patents and Trademarks of the United States, and any official of any country or countries foreign to the United States, whose duty is to issue patents to issue the same to Assignee, its successors, legal representatives and assigns, in accordance with the terms of this instrument.

Assignor hereby represents and covenants that it has the full right to convey the entire interest herein assigned, and the Assignor has not executed, and will not execute, any agreement in conflict herewith.

ASSIGNOR

By: Babak Razi

Name: [illegible]

Title: Managing Partner - Atosh Ventures

Company: WiLinx Corporation

Date: 2-27-15

State of California)

)

County of Los Angeles) ss

I, the undersigned, a Notary Public in and for said County, in the State aforesaid, DO HEREBY CERTIFY THAT BABAK CYRUS RAZI personally known to me to be the same person whose name is subscribed to the foregoing instrument, appeared before me this day in person, and acknowledged that He signed, sealed and delivered the said instrument as his/her/their free and voluntary act, for the uses and purposes therein set forth.

Given under my hand and notarial seal this 27th day of Feb, 2015.

Signature of Notary Public

(Seal)

Daniel Bradford

Printed Name of Notary

DANIEL BRADFORD
COMM. # 2081985
NOTARY PUBLIC - CALIFORNIA
LOS ANGELES COUNTY
COMM. EXPIRES OCT. 15, 2018

DANIEL BRADFORD
COMM. # 2081985
NOTARY PUBLIC - CALIFORNIA
LOS ANGELES COUNTY
COMM. EXPIRES OCT. 15, 2018

My commission expires on October 15, 2018.

UNITED STATES PATENT AND TRADEMARK OFFICE

UNITED STATES DEPARTMENT OF COMMERCE
United States Patent and Trademark Office
Address: COMMISSIONER FOR PATENTS
P.O. Box 1450
Alexandria, Virginia 22313-1450
www.uspto.gov

APPLICATION NO.	ISSUE DATE	PATENT NO.	ATTORNEY DOCKET NO.	CONFIRMATION NO.
12/018,370	04/12/2011	7924802	WiLinx-P011	8018

40418 7590 03/23/2011
HEIMLICH LAW
5952 DIAL WAY
SAN JOSE, CA 95129

ISSUE NOTIFICATION

The projected patent number and issue date are specified above.

Determination of Patent Term Adjustment under 35 U.S.C. 154 (b)
(application filed on or after May 29, 2000)

The Patent Term Adjustment is 718 day(s). Any patent to issue from the above-identified application will include an indication of the adjustment on the front page.

If a Continued Prosecution Application (CPA) was filed in the above-identified application, the filing date that determines Patent Term Adjustment is the filing date of the most recent CPA.

Applicant will be able to obtain more detailed information by accessing the Patent Application Information Retrieval (PAIR) WEB site (http://pair.uspto.gov).

Any questions regarding the Patent Term Extension or Adjustment determination should be directed to the Office of Patent Legal Administration at (571)-272-7702. Questions relating to issue and publication fee payments should be directed to the Application Assistance Unit (AAU) of the Office of Data Management (ODM) at (571)-272-4200.

APPLICANT(s) (Please see PAIR WEB site http://pair.uspto.gov for additional applicants):

Alireza Tarighat-Mehrabani, Marina Del Rey, CA;
Rahim Bagheri, Los Angeles, CA;
Alireza Mehrnia, Los Angeles, CA;
Mahmoud Darvishzadeh, Los Altos Hills, CA;

OIPE IAP6 MAR 0 8 2011 PATENT & TRADEMARK OFFICE

PART B - FEE(S) TRANSMITTAL

Complete and send this form, together with applicable fee(s), to: Mail Mail Stop ISSUE FEE
Commissioner for Patents
P.O. Box 1450
Alexandria, Virginia 22313-1450
or Fax (571)-273-2885

INSTRUCTIONS: This form should be used for transmitting the ISSUE FEE and PUBLICATION FEE (if required). Blocks 1 through 5 should be completed where appropriate. All further correspondence including the Patent, advance orders and notification of maintenance fees will be mailed to the current correspondence address as indicated unless corrected below or directed otherwise in Block 1, by (a) specifying a new correspondence address; and/or (b) indicating a separate "FEE ADDRESS" for maintenance fee notifications.

CURRENT CORRESPONDENCE ADDRESS (Note: Use Block 1 for any change of address)

68155 7590 12/22/2010

FOUNTAINHEAD LAW GROUP, PC
Chad R. Walsh
900 LAFAYETTE STREET
SUITE 301
SANTA CLARA, CA 95050

Note: A certificate of mailing can only be used for domestic mailings of the Fee(s) Transmittal. This certificate cannot be used for any other accompanying papers. Each additional paper, such as an assignment or formal drawing, must have its own certificate of mailing or transmission.

Certificate of Mailing or Transmission

I hereby certify that this Fee(s) Transmittal is being deposited with the United States Postal Service with sufficient postage for first class mail in an envelope addressed to the Mail Stop ISSUE FEE address above, or being facsimile transmitted to the USPTO (571) 273-2885, on the date indicated below.

Rahim Bagheri (Depositor's name)
Rahim Bagheri (Signature)
03/08/2011 (Date)

APPLICATION NO.	FILING DATE	FIRST NAMED INVENTOR	ATTORNEY DOCKET NO.	CONFIRMATION NO.
12/018,370	01/23/2008	Alireza Tarighat-Mehrabani	000007-001100US	8018

TITLE OF INVENTION: WIRELESS COMMUNICATION SYSTEMS AND METHODS

APPLN. TYPE	SMALL ENTITY	ISSUE FEE DUE	PUBLICATION FEE DUE	PREV. PAID ISSUE FEE	TOTAL FEE(S) DUE	DATE DUE
nonprovisional	YES	$755	$300	$0	$1055	03/22/2011

EXAMINER	ART UNIT	CLASS-SUBCLASS
QURESHI, AFSAR M	2472	370-343000

1. Change of correspondence address or indication of "Fee Address" (37 CFR 1.363).
☐ Change of correspondence address (or Change of Correspondence Address form PTO/SB/122) attached.
☐ "Fee Address" indication (or "Fee Address" Indication form PTO/SB/47; Rev 03-02 or more recent) attached. Use of a Customer Number is required.

2. For printing on the patent front page, list
(1) the names of up to 3 registered patent attorneys or agents OR, alternatively,
(2) the name of a single firm (having as a member a registered attorney or agent) and the names of up to 2 registered patent attorneys or agents. If no name is listed, no name will be printed.
1 _____
2 _____
3 _____

3. ASSIGNEE NAME AND RESIDENCE DATA TO BE PRINTED ON THE PATENT (print or type)

PLEASE NOTE: Unless an assignee is identified below, no assignee data will appear on the patent. If an assignee is identified below, the document has been filed for recordation as set forth in 37 CFR 3.11. Completion of this form is NOT a substitute for filing an assignment.

(A) NAME OF ASSIGNEE: WiLinx Corporation
(B) RESIDENCE: (CITY and STATE OR COUNTRY): Carlsbad, California

Please check the appropriate assignee category or categories (will not be printed on the patent): ☐ Individual ☒ Corporation or other private group entity ☐ Government

4a. The following fee(s) are submitted:
☒ Issue Fee
☒ Publication Fee (No small entity discount permitted)
☐ Advance Order - # of Copies _____

4b. Payment of Fee(s): (Please first reapply any previously paid issue fee shown above)
☐ A check is enclosed.
☒ Payment by credit card. Form PTO-2038 is attached.
☐ The Director is hereby authorized to charge the required fee(s), any deficiency, or credit any overpayment, to Deposit Account Number _____ (enclose an extra copy of this form).

5. Change in Entity Status (from status indicated above)
☐ a. Applicant claims SMALL ENTITY status. See 37 CFR 1.27.
☐ b. Applicant is no longer claiming SMALL ENTITY status. See 37 CFR 1.27(g)(2).

NOTE: The Issue Fee and Publication Fee (if required) will not be accepted from anyone other than the applicant; a registered attorney or agent; or the assignee or other party in interest as shown by the records of the United States Patent and Trademark Office.

Authorized Signature Rahim Bagheri
Typed or printed name Rahim Bagheri
Date March 8, 2011
Registration No. _____

This collection of information is required by 37 CFR 1.311. The information is required to obtain or retain a benefit by the public which is to file (and by the USPTO to process) an application. Confidentiality is governed by 35 U.S.C. 122 and 37 CFR 1.14. This collection is estimated to take 12 minutes to complete, including gathering, preparing, and submitting the completed application form to the USPTO. Time will vary depending upon the individual case. Any comments on the amount of time you require to complete this form and/or suggestions for reducing this burden, should be sent to the Chief Information Officer, U.S. Patent and Trademark Office, U.S. Department of Commerce, P.O. Box 1450, Alexandria, Virginia 22313-1450. DO NOT SEND FEES OR COMPLETED FORMS TO THIS ADDRESS. SEND TO: Commissioner for Patents, P.O. Box 1450, Alexandria, Virginia 22313-1450.

Under the Paperwork Reduction Act of 1995, no persons are required to respond to a collection of information unless it displays a valid OMB control number.

03/09/2011 ECHAU2 00000034 12018370
01 FC:2501 755.00 OP
02 FC:1504 300.00 OP

PAGE 1/2 * RCVD AT 3/8/2011 6:56:13 PM [Eastern Standard Time] * SVR:W-PTOFAX-002/44 * DNIS:2732885 * CSID:7604317418 * DURATION (mm-ss):03-09

UNITED STATES PATENT AND TRADEMARK OFFICE

UNITED STATES DEPARTMENT OF COMMERCE
United States Patent and Trademark Office
Address: COMMISSIONER FOR PATENTS
P.O. Box 1450
Alexandria, Virginia 22313-1450
www.uspto.gov

APPLICATION NUMBER	FILING OR 371(C) DATE	FIRST NAMED APPLICANT	ATTY. DOCKET NO./TITLE
12/018,370	01/23/2008	Alireza Tarighat-Mehrabani	000007-001100US

CONFIRMATION NO. 8018

POWER OF ATTORNEY NOTICE

OC000000046214264

68155
FOUNTAINHEAD LAW GROUP, PC
Chad R. Walsh
900 LAFAYETTE STREET
SUITE 301
SANTA CLARA, CA 95050

Date Mailed: 02/28/2011

NOTICE REGARDING CHANGE OF POWER OF ATTORNEY

This is in response to the Power of Attorney filed 02/24/2011.

- The Power of Attorney to you in this application has been revoked by the assignee who has intervened as provided by 37 CFR 3.71. Future correspondence will be mailed to the new address of record(37 CFR 1.33).

/tcouch/

Office of Data Management, Application Assistance Unit (571) 272-4000, or (571) 272-4200, or 1-888-786-0101

UNITED STATES PATENT AND TRADEMARK OFFICE

UNITED STATES DEPARTMENT OF COMMERCE
United States Patent and Trademark Office
Address: COMMISSIONER FOR PATENTS
P.O. Box 1450
Alexandria, Virginia 22313-1450
www.uspto.gov

APPLICATION NUMBER	FILING OR 371(C) DATE	FIRST NAMED APPLICANT	ATTY. DOCKET NO./TITLE
12/018,370	01/23/2008	Alireza Tarighat-Mehrabani	000007-001100US

CONFIRMATION NO. 8018

POA ACCEPTANCE LETTER

40418
HEIMLICH LAW
5952 DIAL WAY
SAN JOSE, CA 95129

OC000000046214266

Date Mailed: 02/28/2011

NOTICE OF ACCEPTANCE OF POWER OF ATTORNEY

This is in response to the Power of Attorney filed 02/24/2011.

The Power of Attorney in this application is accepted. Correspondence in this application will be mailed to the above address as provided by 37 CFR 1.33.

/tcouch/

Office of Data Management, Application Assistance Unit (571) 272-4000, or (571) 272-4200, or 1-888-786-0101

UNITED STATES PATENT AND TRADEMARK OFFICE

UNITED STATES DEPARTMENT OF COMMERCE
United States Patent and Trademark Office
Address: COMMISSIONER FOR PATENTS
P.O. Box 1450
Alexandria, Virginia 22313-1450
www.uspto.gov

Bib Data Sheet

CONFIRMATION NO. 8018

SERIAL NUMBER	FILING OR 371(c) DATE	CLASS	GROUP ART UNIT	ATTORNEY DOCKET NO.
12/018,370	01/23/2008 RULE	370	2472	000007-001100US

APPLICANTS

Alireza Tarighat-Mehrabani, Marina Del Rey, CA;
Rahim Bagheri, Los Angeles, CA;
Alireza Mehrnia, Los Angeles, CA;
Mahmoud Darvishzadeh, Los Altos Hills, CA;

**** CONTINUING DATA ****************************

**** FOREIGN APPLICATIONS ***********************

IF REQUIRED, FOREIGN FILING LICENSE GRANTED ** SMALL ENTITY **
** 02/06/2008

		STATE OR COUNTRY	SHEETS DRAWING	TOTAL CLAIMS	INDEPENDENT CLAIMS
Foreign Priority claimed 35 USC 119 (a-d) conditions met Verified and Acknowledged	☐ yes ☐ no ☐ yes ☐ no ☐ Met after Allowance Examiner's Signature Initials	CA	12	25	4

ADDRESS
40418

TITLE

WIRELESS COMMUNICATION SYSTEMS AND METHODS

FILING FEE RECEIVED		
665	FEES: Authority has been given in Paper No. _____ to charge/credit DEPOSIT ACCOUNT No. _____ for following:	☐ All Fees ☐ 1.16 Fees (Filing) ☐ 1.17 Fees (Processing Ext. of time) ☐ 1.18 Fees (Issue) ☐ Other _____ ☐ Credit

PTO/SB/81 (01-08)
Approved for use through 11/30/2011. OMB 0651-0035
U.S. Patent and Trademark Office; U.S. DEPARTMENT OF COMMERCE
Under the Paperwork Reduction Act of 1995, no persons are required to respond to a collection of information unless it displays a valid OMB control number.

POWER OF ATTORNEY OR REVOCATION OF POWER OF ATTORNEY WITH A NEW POWER OF ATTORNEY AND CHANGE OF CORRESPONDENCE ADDRESS

Application Number	12018370
Filing Date	2008-01-23
First Named Inventor	A. Tarighat-Mehrabani
Title	Wireless Communication Systems and Methods
Art Unit	2472
Examiner Name	Afsar M. Qureshi
Attorney Docket Number	

I hereby revoke all previous powers of attorney given in the above-identified application.

☐ A Power of Attorney is submitted herewith.

OR

☒ I hereby appoint Practitioner(s) associated with the following Customer Number as my/our attorney(s) or agent(s) to prosecute the application identified above, and to transact all business in the United States Patent and Trademark Office connected therewith: **40418**

OR

☐ I hereby appoint Practitioner(s) named below as my/our attorney(s) or agent(s) to prosecute the application identified above, and to transact all business in the United States Patent and Trademark Office connected therewith:

Practitioner(s) Name		Registration Number

Please recognize or change the correspondence address for the above-identified application to:

☐ The address associated with the above-mentioned Customer Number.

OR

☒ The address associated with Customer Number: **40418**

OR

☐ Firm or Individual Name			
Address			
City		State	Zip
Country			
Telephone		Email	

I am the:

☐ Applicant/Inventor.

OR

☒ Assignee of record of the entire interest. See 37 CFR 3.71.
Statement under 37 CFR 3.73(b) (Form PTO/SB/96) submitted herewith or filed on _____

SIGNATURE of Applicant or Assignee of Record

Signature		Date	08/29/11
Name	Rahim Baghen	Telephone	750-710-3075
Title and Company	President/CTO WiLinx Corporation		

NOTE: Signature(s) of all the inventors or assignees of record of the entire interest or their representative(s) are required. Submit multiple forms if more than one signature is required, see below*.

☐ *Total of _____ forms are submitted.

This collection of information is required by 37 CFR 1.31, 1.32 and 1.33. The information is required to obtain or retain a benefit by the public which is to file (and by the USPTO to process) an application. Confidentiality is governed by 35 U.S.C. 122 and 37 CFR 1.11 and 1.14. This collection is estimated to take 3 minutes to complete, including gathering, preparing, and submitting the completed application form to the USPTO. Time will vary depending upon the individual case. Any comments on the amount of time you require to complete this form and/or suggestions for reducing this burden, should be sent to the Chief Information Officer, U.S. Patent and Trademark Office, U.S. Department of Commerce, P.O. Box 1450, Alexandria, VA 22313-1450. DO NOT SEND FEES OR COMPLETED FORMS TO THIS ADDRESS. SEND TO: Commissioner for Patents, P.O. Box 1450, Alexandria, VA 22313-1450.

If you need assistance in completing the form, call 1-800-PTO-9199 and select option 2.

COPY

H00

PTO/SB/96 (01-08)
Approved for use through 01/31/2008. OMB 0651-0031
U.S. Patent and Trademark Office; U.S. DEPARTMENT OF COMMERCE
Under the Paperwork Reduction Act of 1995, no persons are required to respond to a collection of information unless it displays a valid OMB control number.

STATEMENT UNDER 37 CFR 3.73(b)

Applicant/Patent Owner: Alireza Tarighat-Mehrabani et al.

Application No./Patent No.: Not assigned Filed/Issue Date: Herewith

Entitled: Wireless Communication Systems and Methods

WiLinx Corp., a California Corporation
(Name of Assignee) (Type of Assignee, e.g., corporation, partnership, university, government agency, etc.)

states that it is:

1. [✓] the assignee of the entire right, title, and interest; or

2. [ ] an assignee of less than the entire right, title and interest
(The extent (by percentage) of its ownership interest is _____ %)

in the patent application/patent identified above by virtue of either:

A. [✓] An assignment from the inventor(s) of the patent application/patent identified above. The assignment was recorded in the United States Patent and Trademark Office at Reel _____, Frame _____, or for which a copy thereof is attached.

OR

B. [ ] A chain of title from the inventor(s), of the patent application/patent identified above, to the current assignee as follows:

1. From: _____ To: _____
The document was recorded in the United States Patent and Trademark Office at
Reel _____, Frame _____, or for which a copy thereof is attached.

2. From: _____ To: _____
The document was recorded in the United States Patent and Trademark Office at
Reel _____, Frame _____, or for which a copy thereof is attached.

3. From: _____ To: _____
The document was recorded in the United States Patent and Trademark Office at
Reel _____, Frame _____, or for which a copy thereof is attached.

[ ] Additional documents in the chain of title are listed on a supplemental sheet.

[✓] As required by 37 CFR 3.73(b)(1)(i), the documentary evidence of the chain of title from the original owner to the assignee was, or concurrently is being, submitted for recordation pursuant to 37 CFR 3.11.

[NOTE: A separate copy (i.e., a true copy of the original assignment document(s)) must be submitted to Assignment Division in accordance with 37 CFR Part 3, to record the assignment in the records of the USPTO. See MPEP 302.08]

The undersigned (whose title is supplied below) is authorized to act on behalf of the assignee.

Signature	Jan. 04, 2008 Date
Manouh Diafari Printed or Typed Name	310-571-1701 Telephone Number
CEO Title	

This collection of information is required by 37 CFR 3.73(b). The information is required to obtain or retain a benefit by the public which is to file (and by the USPTO to process) an application. Confidentiality is governed by 35 U.S.C. 122 and 37 CFR 1.11 and 1.14. This collection is estimated to take 12 minutes to complete, including gathering, preparing, and submitting the completed application form to the USPTO. Time will vary depending upon the individual case. Any comments on the amount of time you require to complete this form and/or suggestions for reducing this burden, should be sent to the Chief Information Officer, U.S. Patent and Trademark Office, U.S. Department of Commerce, P.O. Box 1450, Alexandria, VA 22313-1450. DO NOT SEND FEES OR COMPLETED FORMS TO THIS ADDRESS. SEND TO: **Commissioner for Patents, P.O. Box 1450, Alexandria, VA 22313-1450.**

If you need assistance in completing the form, call 1-800-PTO-9199 and select option 2.

COPY

Attorney Docket No.: 000007-001100US

ASSIGNMENT OF PATENT APPLICATION

JOINT

WHEREAS, Alireza Tarighat-Mehrabani, a citizen of Iran, residing at 13914 Bora Bora Way #D205, Marina Del Rey, CA 90292; Rahim Bagheri, a citizen of Iran, residing at 1317 S. Westgate Ave., #302, Los Angeles, CA 90025; Alireza Mehrnia, a citizen of Iran, residing at 3240 Sawtelle Blvd #207, Los Angeles, CA 90066; and Mahmoud Darvishzadeh a citizen of the United Kingdom, residing at 24612 Olive Tree Lane, Los Altos Hills, CA 94024, hereinafter referred to as "Assignors," are the inventors of the invention described and set forth in the below-identified application for United States Letters Patent:

Title of Invention: Wireless Communication Systems and Methods

Date(s) of execution of Declaration: 01/04/08 ; 01/03/08 ; and

Filing Date: 01/23/08

WHEREAS, WiLinx Corp., a corporation of the state of California, located at 12400 Wilshire Blvd., Ste. 370, Los Angeles, CA. 90025, hereinafter referred to as "ASSIGNEE," is desirous of acquiring an interest in the invention and application and in any U.S. Letters Patent and Registrations which may be granted on the same;

For good and valuable consideration, receipt of which is hereby acknowledged by Assignors, Assignors have assigned, and by these presents do assign to Assignee all right, title and interest in and to the invention and application and to all foreign counterparts (including patent, utility model and industrial designs), and in and to any Letters Patent and Registrations which may hereafter be granted on the same in the United States and all countries throughout the world, and to claim the priority from the application as provided by the Paris Convention. The right, title and interest is to be held and enjoyed by Assignee and Assignee's successors and assigns as fully and exclusively as it would have been held and enjoyed by Assignors had this Assignment not been made, for the full term of any Letters Patent and Registrations which may be granted thereon, or of any division, renewal, continuation in whole or in part, substitution, conversion, reissue, prolongation or extension thereof.

Assignors further agree that they will, without charge to Assignee, but at Assignee's expense, (a) cooperate with Assignee in the prosecution of U.S. Patent applications and foreign counterparts on the invention and any improvements, (b) execute, verify, acknowledge and deliver all such further papers, including patent applications and instruments of transfer, and (c) perform such other acts as Assignee lawfully may request to obtain or maintain Letters Patent and Registrations for the invention and improvements in any and all countries, and to vest title thereto in Assignee, or Assignee's successors and assigns.

Assignors hereby authorize and request Chad R. Walsh of Fountainhead Law Group P.C., 900 Lafayette St., Ste. 509, Santa Clara, CA 95050, to insert herein above the date of execution of declaration and filing date of said application when known.

IN TESTIMONY WHEREOF, Assignors have signed their names on the dates indicated.

Dated: Jan 4th, 2008 — Alireza Tarighat-Mehrabani

Dated: Jan 4th, 2008 — Rahim Bagheri

Dated: Jan 3, 2008 — Alireza Mehrnia

Dated: Jan 2, 2008 — Mahmoud Darvishzadeh

Electronic Acknowledgement Receipt

EFS ID:	9524902
Application Number:	12018370
International Application Number:	
Confirmation Number:	8018
Title of Invention:	WIRELESS COMMUNICATION SYSTEMS AND METHODS
First Named Inventor/Applicant Name:	Alireza Tarighat-Mehrabani
Customer Number:	68155
Filer:	Chad Richard Walsh/Velma Hernandez
Filer Authorized By:	Chad Richard Walsh
Attorney Docket Number:	000007-001100US
Receipt Date:	24-FEB-2011
Filing Date:	23-JAN-2008
Time Stamp:	15:00:53
Application Type:	Utility under 35 USC 111(a)

Payment information:

Submitted with Payment	no

File Listing:

Document Number	Document Description	File Name	File Size(Bytes)/ Message Digest	Multi Part /.zip	Pages (if appl.)
1		7-1100_POA_Statement.pdf	754776 1036b57bb86877935d2838b55bd2fe32b1c899b3	yes	3

	Multipart Description/PDF files in .zip description		
	Document Description	**Start**	**End**
	Power of Attorney	1	1
	Assignee showing of ownership per 37 CFR 3.73(b).	2	3
Warnings:			
Information:			
	Total Files Size (in bytes):	754776	

This Acknowledgement Receipt evidences receipt on the noted date by the USPTO of the indicated documents, characterized by the applicant, and including page counts, where applicable. It serves as evidence of receipt similar to a Post Card, as described in MPEP 503.

New Applications Under 35 U.S.C. 111
If a new application is being filed and the application includes the necessary components for a filing date (see 37 CFR 1.53(b)-(d) and MPEP 506), a Filing Receipt (37 CFR 1.54) will be issued in due course and the date shown on this Acknowledgement Receipt will establish the filing date of the application.

National Stage of an International Application under 35 U.S.C. 371
If a timely submission to enter the national stage of an international application is compliant with the conditions of 35 U.S.C. 371 and other applicable requirements a Form PCT/DO/EO/903 indicating acceptance of the application as a national stage submission under 35 U.S.C. 371 will be issued in addition to the Filing Receipt, in due course.

New International Application Filed with the USPTO as a Receiving Office
If a new international application is being filed and the international application includes the necessary components for an international filing date (see PCT Article 11 and MPEP 1810), a Notification of the International Application Number and of the International Filing Date (Form PCT/RO/105) will be issued in due course, subject to prescriptions concerning national security, and the date shown on this Acknowledgement Receipt will establish the international filing date of the application.

UNITED STATES PATENT AND TRADEMARK OFFICE

UNITED STATES DEPARTMENT OF COMMERCE
United States Patent and Trademark Office
Address: COMMISSIONER FOR PATENTS
P.O. Box 1450
Alexandria, Virginia 22313-1450
www.uspto.gov

NOTICE OF ALLOWANCE AND FEE(S) DUE

68155 7590 12/22/2010

FOUNTAINHEAD LAW GROUP, PC
Chad R. Walsh
900 LAFAYETTE STREET
SUITE 301
SANTA CLARA, CA 95050

EXAMINER
QURESHI, AFSAR M

ART UNIT	PAPER NUMBER
2472	

DATE MAILED: 12/22/2010

APPLICATION NO.	FILING DATE	FIRST NAMED INVENTOR	ATTORNEY DOCKET NO.	CONFIRMATION NO.
12/018,370	01/23/2008	Alireza Tarighat-Mehrabani	000007-001100US	8018

TITLE OF INVENTION: WIRELESS COMMUNICATION SYSTEMS AND METHODS

APPLN. TYPE	SMALL ENTITY	ISSUE FEE DUE	PUBLICATION FEE DUE	PREV. PAID ISSUE FEE	TOTAL FEE(S) DUE	DATE DUE
nonprovisional	YES	$755	$300	$0	$1055	03/22/2011

THE APPLICATION IDENTIFIED ABOVE HAS BEEN EXAMINED AND IS ALLOWED FOR ISSUANCE AS A PATENT. PROSECUTION ON THE MERITS IS CLOSED. THIS NOTICE OF ALLOWANCE IS NOT A GRANT OF PATENT RIGHTS. THIS APPLICATION IS SUBJECT TO WITHDRAWAL FROM ISSUE AT THE INITIATIVE OF THE OFFICE OR UPON PETITION BY THE APPLICANT. SEE 37 CFR 1.313 AND MPEP 1308.

THE ISSUE FEE AND PUBLICATION FEE (IF REQUIRED) MUST BE PAID WITHIN THREE MONTHS FROM THE MAILING DATE OF THIS NOTICE OR THIS APPLICATION SHALL BE REGARDED AS ABANDONED. THIS STATUTORY PERIOD CANNOT BE EXTENDED. SEE 35 U.S.C. 151. THE ISSUE FEE DUE INDICATED ABOVE DOES NOT REFLECT A CREDIT FOR ANY PREVIOUSLY PAID ISSUE FEE IN THIS APPLICATION. IF AN ISSUE FEE HAS PREVIOUSLY BEEN PAID IN THIS APPLICATION (AS SHOWN ABOVE), THE RETURN OF PART B OF THIS FORM WILL BE CONSIDERED A REQUEST TO REAPPLY THE PREVIOUSLY PAID ISSUE FEE TOWARD THE ISSUE FEE NOW DUE.

HOW TO REPLY TO THIS NOTICE:

I. Review the SMALL ENTITY status shown above.

If the SMALL ENTITY is shown as YES, verify your current SMALL ENTITY status:

A. If the status is the same, pay the TOTAL FEE(S) DUE shown above.

B. If the status above is to be removed, check box 5b on Part B - Fee(s) Transmittal and pay the PUBLICATION FEE (if required) and twice the amount of the ISSUE FEE shown above, or

If the SMALL ENTITY is shown as NO:

A. Pay TOTAL FEE(S) DUE shown above, or

B. If applicant claimed SMALL ENTITY status before, or is now claiming SMALL ENTITY status, check box 5a on Part B - Fee(s) Transmittal and pay the PUBLICATION FEE (if required) and 1/2 the ISSUE FEE shown above.

II. PART B - FEE(S) TRANSMITTAL, or its equivalent, must be completed and returned to the United States Patent and Trademark Office (USPTO) with your ISSUE FEE and PUBLICATION FEE (if required). If you are charging the fee(s) to your deposit account, section "4b" of Part B - Fee(s) Transmittal should be completed and an extra copy of the form should be submitted. If an equivalent of Part B is filed, a request to reapply a previously paid issue fee must be clearly made, and delays in processing may occur due to the difficulty in recognizing the paper as an equivalent of Part B.

III. All communications regarding this application must give the application number. Please direct all communications prior to issuance to Mail Stop ISSUE FEE unless advised to the contrary.

IMPORTANT REMINDER: Utility patents issuing on applications filed on or after Dec. 12, 1980 may require payment of maintenance fees. It is patentee's responsibility to ensure timely payment of maintenance fees when due.

PTOL-85 (Rev. 08/07) Approved for use through 08/31/2010.

PART B - FEE(S) TRANSMITTAL

Complete and send this form, together with applicable fee(s), to: Mail **Mail Stop ISSUE FEE**
Commissioner for Patents
P.O. Box 1450
Alexandria, Virginia 22313-1450
or Fax (571)-273-2885

INSTRUCTIONS: This form should be used for transmitting the ISSUE FEE and PUBLICATION FEE (if required). Blocks 1 through 5 should be completed where appropriate. All further correspondence including the Patent, advance orders and notification of maintenance fees will be mailed to the current correspondence address as indicated unless corrected below or directed otherwise in Block 1, by (a) specifying a new correspondence address; and/or (b) indicating a separate "FEE ADDRESS" for maintenance fee notifications.

CURRENT CORRESPONDENCE ADDRESS (Note: Use Block 1 for any change of address)

68155 7590 12/22/2010

FOUNTAINHEAD LAW GROUP, PC
Chad R. Walsh
900 LAFAYETTE STREET
SUITE 301
SANTA CLARA, CA 95050

Note: A certificate of mailing can only be used for domestic mailings of the Fee(s) Transmittal. This certificate cannot be used for any other accompanying papers. Each additional paper, such as an assignment or formal drawing, must have its own certificate of mailing or transmission.

Certificate of Mailing or Transmission

I hereby certify that this Fee(s) Transmittal is being deposited with the United States Postal Service with sufficient postage for first class mail in an envelope addressed to the Mail Stop ISSUE FEE address above, or being facsimile transmitted to the USPTO (571) 273-2885, on the date indicated below.

(Depositor's name)

(Signature)

(Date)

APPLICATION NO.	FILING DATE	FIRST NAMED INVENTOR	ATTORNEY DOCKET NO.	CONFIRMATION NO.
12/018,370	01/23/2008	Alireza Tarighat-Mehrabani	000007-001100US	8018

TITLE OF INVENTION: WIRELESS COMMUNICATION SYSTEMS AND METHODS

APPLN. TYPE	SMALL ENTITY	ISSUE FEE DUE	PUBLICATION FEE DUE	PREV. PAID ISSUE FEE	TOTAL FEE(S) DUE	DATE DUE
nonprovisional	YES	$755	$300	$0	$1055	03/22/2011

EXAMINER	ART UNIT	CLASS-SUBCLASS
QURESHI, AFSAR M	2472	370-343000

1. Change of correspondence address or indication of "Fee Address" (37 CFR 1.363).

❑ Change of correspondence address (or Change of Correspondence Address form PTO/SB/122) attached.

❑ "Fee Address" indication (or "Fee Address" Indication form PTO/SB/47; Rev 03-02 or more recent) attached. **Use of a Customer Number is required.**

2. For printing on the patent front page, list

(1) the names of up to 3 registered patent attorneys or agents OR, alternatively,

(2) the name of a single firm (having as a member a registered attorney or agent) and the names of up to 2 registered patent attorneys or agents. If no name is listed, no name will be printed.

1_____

2_____

3_____

3. ASSIGNEE NAME AND RESIDENCE DATA TO BE PRINTED ON THE PATENT (print or type)

PLEASE NOTE: Unless an assignee is identified below, no assignee data will appear on the patent. If an assignee is identified below, the document has been filed for recordation as set forth in 37 CFR 3.11. Completion of this form is NOT a substitute for filing an assignment.

(A) NAME OF ASSIGNEE (B) RESIDENCE: (CITY and STATE OR COUNTRY)

Please check the appropriate assignee category or categories (will not be printed on the patent) : ❑ Individual ❑ Corporation or other private group entity ❑ Government

4a. The following fee(s) are submitted:

❑ Issue Fee

❑ Publication Fee (No small entity discount permitted)

❑ Advance Order - # of Copies _____

4b. Payment of Fee(s): **(Please first reapply any previously paid issue fee shown above)**

❑ A check is enclosed.

❑ Payment by credit card. Form PTO-2038 is attached.

❑ The Director is hereby authorized to charge the required fee(s), any deficiency, or credit any overpayment, to Deposit Account Number _____ (enclose an extra copy of this form).

5. **Change in Entity Status** (from status indicated above)

❑ a. Applicant claims SMALL ENTITY status. See 37 CFR 1.27.

❑ b. Applicant is no longer claiming SMALL ENTITY status. See 37 CFR 1.27(g)(2).

NOTE: The Issue Fee and Publication Fee (if required) will not be accepted from anyone other than the applicant; a registered attorney or agent; or the assignee or other party in interest as shown by the records of the United States Patent and Trademark Office.

Authorized Signature _____ Date _____

Typed or printed name _____ Registration No. _____

This collection of information is required by 37 CFR 1.311. The information is required to obtain or retain a benefit by the public which is to file (and by the USPTO to process) an application. Confidentiality is governed by 35 U.S.C. 122 and 37 CFR 1.14. This collection is estimated to take 12 minutes to complete, including gathering, preparing, and submitting the completed application form to the USPTO. Time will vary depending upon the individual case. Any comments on the amount of time you require to complete this form and/or suggestions for reducing this burden, should be sent to the Chief Information Officer, U.S. Patent and Trademark Office, U.S. Department of Commerce, P.O. Box 1450, Alexandria, Virginia 22313-1450. DO NOT SEND FEES OR COMPLETED FORMS TO THIS ADDRESS. SEND TO: Commissioner for Patents, P.O. Box 1450, Alexandria, Virginia 22313-1450.

Under the Paperwork Reduction Act of 1995, no persons are required to respond to a collection of information unless it displays a valid OMB control number.

UNITED STATES PATENT AND TRADEMARK OFFICE

UNITED STATES DEPARTMENT OF COMMERCE
United States Patent and Trademark Office
Address: COMMISSIONER FOR PATENTS
P.O. Box 1450
Alexandria, Virginia 22313-1450
www.uspto.gov

APPLICATION NO.	FILING DATE	FIRST NAMED INVENTOR	ATTORNEY DOCKET NO.	CONFIRMATION NO.
12/018,370	01/23/2008	Alireza Tarighat-Mehrabani	000007-001100US	8018

68155 7590 12/22/2010

FOUNTAINHEAD LAW GROUP, PC
Chad R. Walsh
900 LAFAYETTE STREET
SUITE 301
SANTA CLARA, CA 95050

EXAMINER
QURESHI, AFSAR M

ART UNIT	PAPER NUMBER
2472	

DATE MAILED: 12/22/2010

Determination of Patent Term Adjustment under 35 U.S.C. 154 (b)
(application filed on or after May 29, 2000)

The Patent Term Adjustment to date is 639 day(s). If the issue fee is paid on the date that is three months after the mailing date of this notice and the patent issues on the Tuesday before the date that is 28 weeks (six and a half months) after the mailing date of this notice, the Patent Term Adjustment will be 639 day(s).

If a Continued Prosecution Application (CPA) was filed in the above-identified application, the filing date that determines Patent Term Adjustment is the filing date of the most recent CPA.

Applicant will be able to obtain more detailed information by accessing the Patent Application Information Retrieval (PAIR) WEB site (http://pair.uspto.gov).

Any questions regarding the Patent Term Extension or Adjustment determination should be directed to the Office of Patent Legal Administration at (571)-272-7702. Questions relating to issue and publication fee payments should be directed to the Customer Service Center of the Office of Patent Publication at 1-(888)-786-0101 or (571)-272-4200.

PTOL-85 (Rev. 08/07) Approved for use through 08/31/2010.

Notice of Allowability	Application No.	Applicant(s)	
	12/018,370	TARIGHAT-MEHRABANI ET AL.	
	Examiner	Art Unit	
	AFSAR M. QURESHI	2472	

-- The MAILING DATE of this communication appears on the cover sheet with the correspondence address--

All claims being allowable, PROSECUTION ON THE MERITS IS (OR REMAINS) CLOSED in this application. If not included herewith (or previously mailed), a Notice of Allowance (PTOL-85) or other appropriate communication will be mailed in due course. **THIS NOTICE OF ALLOWABILITY IS NOT A GRANT OF PATENT RIGHTS.** This application is subject to withdrawal from issue at the initiative of the Office or upon petition by the applicant. See 37 CFR 1.313 and MPEP 1308.

1. ☒ This communication is responsive to *application rcvd. 1/23/2008*.

2. ☒ The allowed claim(s) is/are *1-25*.

3. ☐ Acknowledgment is made of a claim for foreign priority under 35 U.S.C. § 119(a)-(d) or (f).
   a) ☐ All b) ☐ Some* c) ☐ None of the:
      1. ☐ Certified copies of the priority documents have been received.
      2. ☐ Certified copies of the priority documents have been received in Application No. _____ .
      3. ☐ Copies of the certified copies of the priority documents have been received in this national stage application from the International Bureau (PCT Rule 17.2(a)).

   * Certified copies not received: _____.

Applicant has THREE MONTHS FROM THE "MAILING DATE" of this communication to file a reply complying with the requirements noted below. Failure to timely comply will result in ABANDONMENT of this application.
THIS THREE-MONTH PERIOD IS NOT EXTENDABLE.

4. ☐ A SUBSTITUTE OATH OR DECLARATION must be submitted. Note the attached EXAMINER'S AMENDMENT or NOTICE OF INFORMAL PATENT APPLICATION (PTO-152) which gives reason(s) why the oath or declaration is deficient.

5. ☐ CORRECTED DRAWINGS (as "replacement sheets") must be submitted.
   (a) ☐ including changes required by the Notice of Draftsperson's Patent Drawing Review (PTO-948) attached
      1) ☐ hereto or 2) ☐ to Paper No./Mail Date _____.
   (b) ☐ including changes required by the attached Examiner's Amendment / Comment or in the Office action of Paper No./Mail Date _____.

   Identifying indicia such as the application number (see 37 CFR 1.84(c)) should be written on the drawings in the front (not the back) of each sheet. Replacement sheet(s) should be labeled as such in the header according to 37 CFR 1.121(d).

6. ☐ DEPOSIT OF and/or INFORMATION about the deposit of BIOLOGICAL MATERIAL must be submitted. Note the attached Examiner's comment regarding REQUIREMENT FOR THE DEPOSIT OF BIOLOGICAL MATERIAL.

Attachment(s)

1. ☒ Notice of References Cited (PTO-892)
2. ☐ Notice of Draftperson's Patent Drawing Review (PTO-948)
3. ☐ Information Disclosure Statements (PTO/SB/08), Paper No./Mail Date _____
4. ☐ Examiner's Comment Regarding Requirement for Deposit of Biological Material
5. ☐ Notice of Informal Patent Application
6. ☐ Interview Summary (PTO-413), Paper No./Mail Date _____ .
7. ☐ Examiner's Amendment/Comment
8. ☒ Examiner's Statement of Reasons for Allowance
9. ☐ Other _____.

/Afsar M Qureshi/ Primary Examiner, Art Unit 2472	12/3/2010

1. This Office Action is responsive to application received on 1/23/2008.

Claims 1-25 are pending in the application

Reason for Allowance

2. Claims 1-25 are allowed over prior art of record

The following is an examiner's statement of reasons for allowance:

The current invention relates to improving method of transmitting information in a wireless communication system in that frequency difference between first center frequency and a second center frequency is greater than the sum of one-half the frequency range and on-half the second frequency range, first and second information are transmitted using same power amplifier in wireless transmitter wherein bandwidth of power amplifier is greater than the difference between the first lowest frequency and the second highest frequency. The closest prior art of record, Hinson (us 2003/0016701) and Zhang (US 2008/0225761), are in the same field of endeavor, fails to disclose the inventive method steps of "simultaneously transmitting second information across a second frequency range using same wireless transmitter, sane frequency range having a second center frequency greater than the first center frequency, a second highest frequency, and a second lowest frequency (claim 1); Up-converting first analog signal, second analog signal to a second RF center frequency greater than first center RF frequency to produce a second up-converted analog signal wherein the frequency difference between the RF center frequency and the second RF center frequency is greater than the sum of on-half the first frequency range and one-half the second

frequency range (claims 10 and 17); and first and a second downconverter to receive up-converted signal outputting sown-converted signal modulated at the RF frequency wherein a filter receiving down-converted signals (claim 24)".

Any comments considered necessary by applicant must be submitted no later than the payment of the issue fee and, to avoid processing delays, should preferably accompany the issue fee. Such submissions should be clearly labeled "Comments on Statement of Reasons for Allowance."

Conclusion

Any inquiry concerning this communication or earlier communications from the examiner should be directed to AFSAR M. QURESHI whose telephone number is (571)272-3178. If attempts to reach the examiner by telephone are unsuccessful, the examiner's supervisor, William Trost can be reached on (571) 272 7872. The fax phone number for the organization where this application or proceeding is assigned is 571-273-8300.

Information regarding the status of an application may be obtained from the Patent Application Information Retrieval (PAIR) system. Status information for published applications may be obtained from either Private PAIR or Public PAIR. Status information for unpublished applications is available through Private PAIR only. For more information about the PAIR system, see http://pair-direct.uspto.gov. Should you have questions on access to the Private PAIR system, contact the Electronic Business Center (EBC) at 866-217-9197 (toll-free). If you would like assistance from a USPTO Customer Service Representative or access to the automated information system, call 800-786-9199 (IN USA OR CANADA) or 571-272-1000.

12/3/2010

/Afsar M Qureshi/
Primary Examiner
Art Unit 2472

Notice of References Cited	Application/Control No. 12/018,370	Applicant(s)/Patent Under Reexamination TARIGHAT-MEHRABANI ET AL.	
	Examiner AFSAR M. QURESHI	Art Unit 2472	Page 1 of 1

U.S. PATENT DOCUMENTS

*		Document Number Country Code-Number-Kind Code	Date MM-YYYY	Name	Classification
*	A	US-2003/0016701	01-2003	Hinson, Scott R.	370/480
*	B	US-2008/0225761	09-2008	Zhang, Ning	370/310
*	C	US-2008/0227424	09-2008	Muhammad et al.	455/341
*	D	US-2003/0020651	01-2003	Crilly et al.	342/378
*	E	US-5,884,181	03-1999	Arnold et al.	455/450
*	F	US-5,832,044	11-1998	Sousa et al.	375/347
*	G	US-2008/0139132	06-2008	Pan et al.	455/93
*	H	US-7,515,652	04-2009	Jensen, Henrik T.	375/308
*	I	US-6,920,185	07-2005	Hinson, Scott R.	375/295
*	J	US-7,805,119	09-2010	Gur et al.	455/205
	K	US-			
	L	US-			
	M	US-			

FOREIGN PATENT DOCUMENTS

*		Document Number Country Code-Number-Kind Code	Date MM-YYYY	Country	Name	Classification
	N					
	O					
	P					
	Q					
	R					
	S					
	T					

NON-PATENT DOCUMENTS

*		Include as applicable: Author, Title Date, Publisher, Edition or Volume, Pertinent Pages)
	U	
	V	
	W	
	X	

*A copy of this reference is not being furnished with this Office action. (See MPEP § 707.05(a).)
Dates in MM-YYYY format are publication dates. Classifications may be US or foreign.

UNITED STATES PATENT AND TRADEMARK OFFICE

UNITED STATES DEPARTMENT OF COMMERCE
United States Patent and Trademark Office
Address: COMMISSIONER FOR PATENTS
P.O. Box 1450
Alexandria, Virginia 22313-1450
www.uspto.gov

BIB DATA SHEET

CONFIRMATION NO. 8018

SERIAL NUMBER	FILING or 371(c) DATE	CLASS	GROUP ART UNIT	ATTORNEY DOCKET NO.
12/018,370	01/23/2008 RULE	370	2472	000007-001100US

APPLICANTS

Alireza Tarighat-Mehrabani, Marina Del Rey, CA;
Rahim Bagheri, Los Angeles, CA;
Alireza Mehrnia, Los Angeles, CA;
Mahmoud Darvishzadeh, Los Altos Hills, CA;

**** CONTINUING DATA ***************************

**** FOREIGN APPLICATIONS ***************************

**** IF REQUIRED, FOREIGN FILING LICENSE GRANTED **** ** SMALL ENTITY **
02/06/2008

Foreign Priority claimed ☐ Yes ☑ No 35 USC 119(a-d) conditions met ☑ Yes ☐ No Verified and Acknowledged /AFSAR M QURESHI/ Examiner's Signature	☐ Met after Allowance Initials	STATE OR COUNTRY	SHEETS DRAWINGS	TOTAL CLAIMS	INDEPENDENT CLAIMS
		CA	12	25	4

ADDRESS

FOUNTAINHEAD LAW GROUP, PC
Chad R. Walsh
900 LAFAYETTE STREET
SUITE 301
SANTA CLARA, CA 95050
UNITED STATES

TITLE

Wireless Communication Systems and Methods

FILING FEE RECEIVED		
665	FEES: Authority has been given in Paper No._____ to charge/credit DEPOSIT ACCOUNT No._____ for following:	☐ All Fees ☐ 1.16 Fees (Filing) ☐ 1.17 Fees (Processing Ext. of time) ☐ 1.18 Fees (Issue) ☐ Other _____ ☐ Credit

EAST Search History

EAST Search History (Prior Art)

Ref #	Hits	Search Query	DBs	Default Operator	Plurals	Time Stamp
L2	867	Alireza.in.	US-PGPUB; USPAT; USOCR; FPRS; EPO; JPO; DERWENT; IBM_TDB	OR	OFF	2010/12/05 14:29
L3	0	2 and ((transmit$4 same inforamtion) same (first and second))	US-PGPUB; USPAT; USOCR; FPRS; EPO; JPO; DERWENT; IBM_TDB	OR	OFF	2010/12/05 14:31
L4	0	2 and "wireless communication systems and Methods". ti.	US-PGPUB; USPAT; USOCR; FPRS; EPO; JPO; DERWENT; IBM_TDB	OR	OFF	2010/12/05 14:32
L5	34	Bagheri adj Rahim.in.	US-PGPUB; USPAT; USOCR; FPRS; EPO; JPO; DERWENT; IBM_TDB	OR	OFF	2010/12/05 14:32
L6	0	5 and (informtion same (first adj frequency)). clm.	US-PGPUB; USPAT; USOCR; FPRS; EPO; JPO; DERWENT; IBM_TDB	OR	OFF	2010/12/05 14:37
L7	0	5 and "wireless communication systems and Methods". ti.	US-PGPUB; USPAT; USOCR; FPRS; EPO; JPO; DERWENT; IBM_TDB	OR	OFF	2010/12/05 14:37
L9	19	Mehrnia adj alireza.in.	US-PGPUB; USPAT; USOCR; FPRS; EPO; JPO; DERWENT; IBM_TDB	OR	OFF	2010/12/05 14:38

Samsung Ex. 1002, Page 24 of 95

L10	0	9 and "wireless communication systems and Methods". ti.	US-PGPUB; USPAT; USOCR; FPRS; EPO; JPO; DERWENT; IBM_TDB	OR	OFF	2010/12/05 14:38
L11	0	9 and (informtion same (first adj frequency)). clm.	US-PGPUB; USPAT; USOCR; FPRS; EPO; JPO; DERWENT; IBM_TDB	OR	OFF	2010/12/05 14:38
L12	1	Darvishzadeh adj Mahmoud.in.	US-PGPUB; USPAT; USOCR; FPRS; EPO; JPO; DERWENT; IBM_TDB	OR	OFF	2010/12/05 14:39
L13	0	12 and (informtion same (first adj frequency)).clm.	US-PGPUB; USPAT; USOCR; FPRS; EPO; JPO; DERWENT; IBM_TDB	OR	OFF	2010/12/05 14:39
L14	6	Tarighat-Mehrabani adj Alireza.in.	US-PGPUB; USPAT; USOCR; FPRS; EPO; JPO; DERWENT; IBM_TDB	OR	OFF	2010/12/05 14:40
L15	1	14 and ((simultaneously same second) same information)	US-PGPUB; USPAT; USOCR; FPRS; EPO; JPO; DERWENT; IBM_TDB	OR	OFF	2010/12/05 14:40
L16	0	14 and ((simultaneously same second) same information).clm.	US-PGPUB; USPAT; USOCR; FPRS; EPO; JPO; DERWENT; IBM_TDB	OR	OFF	2010/12/05 14:40

12/ 5/ 2010 2:41:19 PM
C:\ Documents and Settings\ aqureshi\ My Documents\ EAST\ Workspaces\ Default EAST Workspace 1600x1200.wsp

Issue Classification	Application/Control No.	Applicant(s)/Patent under Reexamination	
12018370	12/018,370	TARIGHAT-MEHRABANI ET AL.	
	Examiner	Art Unit	
	AFSAR M. QURESHI	2472	

ISSUE CLASSIFICATION

ORIGINAL						CROSS REFERENCE(S)							
CLASS				SUBCLASS	CLASS	SUBCLASS (ONE SUBCLASS PER BLOCK)							
370				343	370	352							
INTERNATIONAL CLASSIFICATION					375	295							
H	0	4	J	1/00	348	E7.052							
H	0	4	B	7/00	455	93							
H	0	4	Q	7/20									
				/									
				/									

(Assistant Examiner) (Date)	/Afsar M. Qureshi/, AU 2472 12/3/2010	Total Claims Allowed: 25
(Legal Instruments Examiner) (Date)	(Primary Examiner) (Date)	O.G. Print Claim(s): 1 O.G. Print Fig.: 2

☒ Claims renumbered in the same order as presented by applicant ☐ CPA ☐ T.D. ☐ R.1.47

Final	Original	Final	Original	Final	Original	Final	Original	Final	Original	Final	Original	Final	Original
1	1		31		61		91		121		151		181
2	2		32		62		92		122		152		182
3	3		33		63		93		123		153		183
4	4		34		64		94		124		154		184
5	5		35		65		95		125		155		185
6	6		36		66		96		126		156		186
7	7		37		67		97		127		157		187
8	8		38		68		98		128		158		188
9	9		39		69		99		129		159		189
10	10		40		70		100		130		160		190
11	11		41		71		101		131		161		191
12	12		42		72		102		132		162		192
13	13		43		73		103		133		163		193
14	14		44		74		104		134		164		194
15	15		45		75		105		135		165		195
16	16		46		76		106		136		166		196
17	17		47		77		107		137		167		197
18	18		48		78		108		138		168		198
19	19		49		79		109		139		169		199
20	20		50		80		110		140		170		200
21	21		51		81		111		141		171		201
22	22		52		82		112		142		172		202
23	23		53		83		113		143		173		203
24	24		54		84		114		144		174		204
25	25		55		85		115		145		175		205
	26		56		86		116		146		176		206
	27		57		87		117		147		177		207
	28		58		88		118		148		178		208

	29		59		89		119		149		179		209
	30		60		90		120		150		180		210

Search Notes	Application/Control No.	Applicant(s)/Patent under Reexamination	
12018370	12/018,370	TARIGHAT-MEHRABANI ET AL.	
	Examiner	**Art Unit**	
	AFSAR M. QURESHI	2472	

SEARCHED			
Class	Subclass	Date	Examiner
370	308,310 343,352 353-356 480-486	12/3/2010	AQ
375	135-297	12/3/2010	AQ
375	372,347	12/3/2010	AQ
375	E7.267	12/3/2010	AQ
455	93,127.1	12/3/2010	AQ
455	102,132	12/3/2010	AQ
455	313-341	12/3/2010	AQ
341	155	12/3/2010	AQ
348	E7.052	12/3/2010	AQ
348	E7.094	12/3/2010	AQ

INTERFERENCE SEARCHED			
Class	Subclass	Date	Examiner
370	**352,343**	**12/3/2010**	**AQ**
375	295	12/3/2010	AQ
455	93	12/3/2010	AQ
348/E7.052		12/3/2010	AQ

SEARCH NOTES (INCLUDING SEARCH STRATEGY)		
	DATE	EXMR
EAST,WEST,EPO,IEEE,USPAT, USOCR,PgPub,Google,JPO,FAST	12/3/2010	AQAQ
Interferene search included	12/3/2010	AQ

Index of Claims	Application/Control No.	Applicant(s)/Patent under Reexamination
12018370	12/018,370	TARIGHAT-MEHRABANI ET AL.
	Examiner	**Art Unit**
	AFSAR M. QURESHI	2472

√	Rejected	–	(Through numeral) Cancelled	N	Non-Elected	A	Appeal
=	Allowed	÷	Restricted	I	Interference	O	Objected

Claim		Date								
Final	Original	12/3/10								
1	1	=								
	2	=								
	3	=								
	4	=								
	5	=								
	6	=								
	7	=								
	8	=								
	9	=								
	10	=								
	11	=								
	12	=								
	13	=								
	14	=								
	15	=								
	16	=								
	17	=								
	18	=								
	19	=								
	20	=								
	21	=								
	22	=								
	23	=								
	24	=								
25	25	=								
	26									
	27									
	28									
	29									
	30									
	31									
	32									
	33									
	34									
	35									
	36									
	37									
	38									
	39									
	40									
	41									
	42									
	43									
	44									
	45									
	46									
	47									
	48									
	49									
	50									

Claim		Date								
Final	Original									
	51									
	52									
	53									
	54									
	55									
	56									
	57									
	58									
	59									
	60									
	61									
	62									
	63									
	64									
	65									
	66									
	67									
	68									
	69									
	70									
	71									
	72									
	73									
	74									
	75									
	76									
	77									
	78									
	79									
	80									
	81									
	82									
	83									
	84									
	85									
	86									
	87									
	88									
	89									
	90									
	91									
	92									
	93									
	94									
	95									
	96									
	97									
	98									
	99									
	100									

Claim		Date								
Final	Original									
	101									
	102									
	103									
	104									
	105									
	106									
	107									
	108									
	109									
	110									
	111									
	112									
	113									
	114									
	115									
	116									
	117									
	118									
	119									
	120									
	121									
	122									
	123									
	124									
	125									
	126									
	127									
	128									
	129									
	130									
	131									
	132									
	133									
	134									
	135									
	136									
	137									
	138									
	139									
	140									
	141									
	142									
	143									
	144									
	145									
	146									
	147									
	148									
	149									
	150									

EAST Search History

EAST Search History (Prior Art)

Ref #	Hits	Search Query	DBs	Default Operator	Plurals	Time Stamp
L2	867	Alireza.in.	US-PGPUB; USPAT; USOCR; FPRS; EPO; JPO; DERWENT; IBM_TDB	OR	OFF	2010/12/05 14:29
L3	0	2 and ((transmit$4 same inforamtion) same (first and second))	US-PGPUB; USPAT; USOCR; FPRS; EPO; JPO; DERWENT; IBM_TDB	OR	OFF	2010/12/05 14:31
L4	0	2 and "wireless communication systems and Methods". ti.	US-PGPUB; USPAT; USOCR; FPRS; EPO; JPO; DERWENT; IBM_TDB	OR	OFF	2010/12/05 14:32
L5	34	Bagheri adj Rahim.in.	US-PGPUB; USPAT; USOCR; FPRS; EPO; JPO; DERWENT; IBM_TDB	OR	OFF	2010/12/05 14:32
L6	0	5 and (informtion same (first adj frequency)). clm.	US-PGPUB; USPAT; USOCR; FPRS; EPO; JPO; DERWENT; IBM_TDB	OR	OFF	2010/12/05 14:37
L7	0	5 and "wireless communication systems and Methods". ti.	US-PGPUB; USPAT; USOCR; FPRS; EPO; JPO; DERWENT; IBM_TDB	OR	OFF	2010/12/05 14:37
L9	19	Mehrnia adj alireza.in.	US-PGPUB; USPAT; USOCR; FPRS; EPO; JPO; DERWENT; IBM_TDB	OR	OFF	2010/12/05 14:38

L10	0	9 and "wireless communication systems and Methods". ti.	US-PGPUB; USPAT; USOCR; FPRS; EPO; JPO; DERWENT; IBM_TDB	OR	OFF	2010/12/05 14:38
L11	0	9 and (informtion same (first adj frequency)). clm.	US-PGPUB; USPAT; USOCR; FPRS; EPO; JPO; DERWENT; IBM_TDB	OR	OFF	2010/12/05 14:38
L12	1	Darvishzadeh adj Mahmoud.in.	US-PGPUB; USPAT; USOCR; FPRS; EPO; JPO; DERWENT; IBM_TDB	OR	OFF	2010/12/05 14:39
L13	0	12 and (informtion same (first adj frequency)).clm.	US-PGPUB; USPAT; USOCR; FPRS; EPO; JPO; DERWENT; IBM_TDB	OR	OFF	2010/12/05 14:39
L14	6	Tarighat-Mehrabani adj Alireza.in.	US-PGPUB; USPAT; USOCR; FPRS; EPO; JPO; DERWENT; IBM_TDB	OR	OFF	2010/12/05 14:40
L15	1	14 and ((simultaneously same second) same information)	US-PGPUB; USPAT; USOCR; FPRS; EPO; JPO; DERWENT; IBM_TDB	OR	OFF	2010/12/05 14:40
L16	0	14 and ((simultaneously same second) same information).clm.	US-PGPUB; USPAT; USOCR; FPRS; EPO; JPO; DERWENT; IBM_TDB	OR	OFF	2010/12/05 14:40

12/ 5/ 2010 2:41:45 PM
C:\ Documents and Settings\ aqureshi\ My Documents\ EAST\ Workspaces\ Default EAST Workspace 1600x1200.wsp

EAST Search History

EAST Search History (Prior Art)

Ref #	Hits	Search Query	DBs	Default Operator	Plurals	Time Stamp
L6	1865	((communication adj systems) same (wireless or cellular)).ti.	US-PGPUB; USPAT; USOCR; FPRS; EPO; JPO; DERWENT; IBM_TDB	OR	OFF	2010/12/05 16:06
L7	239	L6 and ("analog to digital converter" or ADC or modem)	US-PGPUB; USPAT; USOCR; FPRS; EPO; JPO; DERWENT; IBM_TDB	OR	OFF	2010/12/05 16:06
L8	0	7 and ("up-convert$3" same (digital adj signal))	US-PGPUB; USPAT; USOCR; FPRS; EPO; JPO; DERWENT; IBM_TDB	OR	OFF	2010/12/05 16:07
L9	56138	((communication adj systems) same (wireless or cellular))	US-PGPUB; USPAT; USOCR; FPRS; EPO; JPO; DERWENT; IBM_TDB	OR	OFF	2010/12/05 16:07
L10	0	9 and ("up-convert$3" same (digital adj signal))	US-PGPUB; USPAT; USOCR; FPRS; EPO; JPO; DERWENT; IBM_TDB	OR	OFF	2010/12/05 16:07
L11	0	9 and ("up-convert$3" and (digital adj signal))	US-PGPUB; USPAT; USOCR; FPRS; EPO; JPO; DERWENT; IBM_TDB	OR	OFF	2010/12/05 16:08
L12	181	9 and (upconverting and (digital adj signal))	US-PGPUB; USPAT; USOCR; FPRS; EPO; JPO; DERWENT; IBM_TDB	OR	OFF	2010/12/05 16:08

L13	0	9 and ("up-convert$3" same (digital adj signal))	US-PGPUB; USPAT; USOCR; FPRS; EPO; JPO; DERWENT; IBM_TDB	OR	OFF	2010/12/05 16:08
L14	49	12 and DAC	US-PGPUB; USPAT; USOCR; FPRS; EPO; JPO; DERWENT; IBM_TDB	OR	OFF	2010/12/05 16:09
L15	8	14 and (RF same (center adj12 frequency))	US-PGPUB; USPAT; USOCR; FPRS; EPO; JPO; DERWENT; IBM_TDB	OR	OFF	2010/12/05 16:09
L16	7	15 and ((combin$3 or sum$4) and (amplify $3))	US-PGPUB; USPAT; USOCR; FPRS; EPO; JPO; DERWENT; IBM_TDB	OR	OFF	2010/12/05 16:10
S2	867	Alireza.in.	US-PGPUB; USPAT; USOCR; FPRS; EPO; JPO; DERWENT; IBM_TDB	OR	OFF	2010/12/05 14:29
S3	0	S2 and ((transmit$4 same inforamtion) same (first and second))	US-PGPUB; USPAT; USOCR; FPRS; EPO; JPO; DERWENT; IBM_TDB	OR	OFF	2010/12/05 14:31
S4	0	S2 and "wireless communication systems and Methods".ti.	US-PGPUB; USPAT; USOCR; FPRS; EPO; JPO; DERWENT; IBM_TDB	OR	OFF	2010/12/05 14:32
S5	34	Bagheri adj Rahim.in.	US-PGPUB; USPAT; USOCR; FPRS; EPO; JPO; DERWENT; IBM_TDB	OR	OFF	2010/12/05 14:32

Samsung Ex. 1002, Page 33 of 95

S6	0	S5 and (informtion same (first adj frequency)).clm.	US-PGPUB; USPAT; USOCR; FPRS; EPO; JPO; DERWENT; IBM_TDB	OR	OFF	2010/12/05 14:37
S7	0	S5 and "wireless communication systems and Methods".ti.	US-PGPUB; USPAT; USOCR; FPRS; EPO; JPO; DERWENT; IBM_TDB	OR	OFF	2010/12/05 14:37
S9	19	Mehrnia adj alireza.in.	US-PGPUB; USPAT; USOCR; FPRS; EPO; JPO; DERWENT; IBM_TDB	OR	OFF	2010/12/05 14:38
S10	0	S9 and "wireless communication systems and Methods".ti.	US-PGPUB; USPAT; USOCR; FPRS; EPO; JPO; DERWENT; IBM_TDB	OR	OFF	2010/12/05 14:38
S11	0	S9 and (informtion same (first adj frequency)).clm.	US-PGPUB; USPAT; USOCR; FPRS; EPO; JPO; DERWENT; IBM_TDB	OR	OFF	2010/12/05 14:38
S12	1	Darvishzadeh adj Mahmoud.in.	US-PGPUB; USPAT; USOCR; FPRS; EPO; JPO; DERWENT; IBM_TDB	OR	OFF	2010/12/05 14:39
S13	0	S12 and (informtion same (first adj frequency)).clm.	US-PGPUB; USPAT; USOCR; FPRS; EPO; JPO; DERWENT; IBM_TDB	OR	OFF	2010/12/05 14:39
S14	6	Tarighat-Mehrabani adj Alireza.in.	US-PGPUB; USPAT; USOCR; FPRS; EPO; JPO; DERWENT; IBM_TDB	OR	OFF	2010/12/05 14:40

S15	1	S14 and ((simultaneously same second) same information)	US-PGPUB; USPAT; USOCR; FPRS; EPO; JPO; DERWENT; IBM_TDB	OR	OFF	2010/12/05 14:40
S16	0	S14 and ((simultaneously same second) same information).clm.	US-PGPUB; USPAT; USOCR; FPRS; EPO; JPO; DERWENT; IBM_TDB	OR	OFF	2010/12/05 14:40
S17	11	((transmit$4 same inforamtion) same (first and second))	US-PGPUB; USPAT; USOCR; FPRS; EPO; JPO; DERWENT; IBM_TDB	OR	OFF	2010/12/05 14:42
S18	1865	((communication adj systems) same (wireless or cellular)).ti.	US-PGPUB; USPAT; USOCR; FPRS; EPO; JPO; DERWENT; IBM_TDB	OR	OFF	2010/12/05 14:43
S19	1935	((communication adj systems) same (wireless or cellular or RF)).ti.	US-PGPUB; USPAT; USOCR; FPRS; EPO; JPO; DERWENT; IBM_TDB	OR	OFF	2010/12/05 14:43
S20	88	S19 and (transmission adj channel$1)	US-PGPUB; USPAT; USOCR; FPRS; EPO; JPO; DERWENT; IBM_TDB	OR	OFF	2010/12/05 14:43
S21	1	S20 and ("digital to analog converter" or DAC)	US-PGPUB; USPAT; USOCR; FPRS; EPO; JPO; DERWENT; IBM_TDB	OR	OFF	2010/12/05 14:44
S22	148	S19 and (wireless adj5 transmitter)	US-PGPUB; USPAT; USOCR; FPRS; EPO; JPO; DERWENT; IBM_TDB	OR	OFF	2010/12/05 14:46

Samsung Ex. 1002, Page 35 of 95

S23	68	S22 and (first same frequency)	US-PGPUB; USPAT; USOCR; FPRS; EPO; JPO; DERWENT; IBM_TDB	OR	OFF	2010/12/05 14:46
S24	5	S23 and (frequency same (high and low and center))	US-PGPUB; USPAT; USOCR; FPRS; EPO; JPO; DERWENT; IBM_TDB	OR	OFF	2010/12/05 14:47
S25	7	S23 and (frequency same (high$3 and low $3 and center))	US-PGPUB; USPAT; USOCR; FPRS; EPO; JPO; DERWENT; IBM_TDB	OR	OFF	2010/12/05 14:47
S26	0	S25 and (transmit$4 same (similar adj transmitter))	US-PGPUB; USPAT; USOCR; FPRS; EPO; JPO; DERWENT; IBM_TDB	OR	OFF	2010/12/05 14:48
S27	0	S25 and (transmit$4 same (common adj transmitter))	US-PGPUB; USPAT; USOCR; FPRS; EPO; JPO; DERWENT; IBM_TDB	OR	OFF	2010/12/05 14:48
S28	1	S25 and (transmit$4 same (power adj amplifier))	US-PGPUB; USPAT; USOCR; FPRS; EPO; JPO; DERWENT; IBM_TDB	OR	OFF	2010/12/05 14:49

12/5/2010 4:22:35 PM
C:\ Documents and Settings\ aqureshi\ My Documents\ EAST\ Workspaces\ Default EAST Workspace 1600x1200.wsp

EAST Search History

EAST Search History (Interference)

Ref #	Hits	Search Query	DBs	Default Operator	Plurals	Time Stamp
L17	10233	((first same frequency) same range).clm.	USPAT; UPAD	OR	OFF	2010/12/05 16:23
L18	0	17 and ((simultaneously adj trannsmit$4) same (second adj frequency)).clm.	USPAT; UPAD	OR	OFF	2010/12/05 16:24
L19	0	((simultaneously adj trannsmit$4) same (second adj frequency)).clm.	USPAT; UPAD	OR	OFF	2010/12/05 16:25
L20	402	17 and "370"/$.ccls.	USPAT; UPAD	OR	OFF	2010/12/05 16:25
L21	30	20 and 370/352-356,343.ccls.	USPAT; UPAD	OR	OFF	2010/12/05 16:25
L22	7	21 and "375"/$.ccls.	USPAT; UPAD	OR	OFF	2010/12/05 16:26
L23	0	22 and 375/135,295.ccls.	USPAT; UPAD	OR	OFF	2010/12/05 16:26
L24	0	22 and 375/135,229,280,281295,297,372,347.ccls.	USPAT; UPAD	OR	OFF	2010/12/05 16:27
L25	1	22 and "455"/$.ccls.	USPAT; UPAD	OR	OFF	2010/12/05 16:27
L26	0	25 and (convert$3 and (analog and digital)).clm.	USPAT; UPAD	OR	OFF	2010/12/05 16:29
L28	0	21 and 348/E7.052.ccls.	USPAT; UPAD	OR	OFF	2010/12/05 16:30
L29	0	21 and 348/E7.094.ccls.	USPAT; UPAD	OR	OFF	2010/12/05 16:30

12/5/2010 4:30:41 PM
C:\ Documents and Settings\ aqureshi\ My Documents\ EAST\ Workspaces\ Default EAST Workspace 1600x1200.wsp

UNITED STATES PATENT AND TRADEMARK OFFICE

UNITED STATES DEPARTMENT OF COMMERCE
United States Patent and Trademark Office
Address: COMMISSIONER FOR PATENTS
P.O. Box 1450
Alexandria, Virginia 22313-1450
www.uspto.gov

APPLICATION NUMBER	FILING OR 371(C) DATE	FIRST NAMED APPLICANT	ATTY. DOCKET NO./TITLE
12/018,370	01/23/2008	Alireza Tarighat-Mehrabani	000007-001100US

CONFIRMATION NO. 8018

PUBLICATION NOTICE

OC000000037045721

68155
FOUNTAINHEAD LAW GROUP, PC
900 LAFAYETTE STREET
SUITE 200
SANTA CLARA, CA 95050

Title: Wireless Communication Systems and Methods

Publication No.US-2009-0185545-A1
Publication Date:07/23/2009

NOTICE OF PUBLICATION OF APPLICATION

The above-identified application will be electronically published as a patent application publication pursuant to 37 CFR 1.211, et seq. The patent application publication number and publication date are set forth above.

The publication may be accessed through the USPTO's publically available Searchable Databases via the Internet at www.uspto.gov. The direct link to access the publication is currently http://www.uspto.gov/patft/.

The publication process established by the Office does not provide for mailing a copy of the publication to applicant. A copy of the publication may be obtained from the Office upon payment of the appropriate fee set forth in 37 CFR 1.19(a)(1). Orders for copies of patent application publications are handled by the USPTO's Office of Public Records. The Office of Public Records can be reached by telephone at (703) 308-9726 or (800) 972-6382, by facsimile at (703) 305-8759, by mail addressed to the United States Patent and Trademark Office, Office of Public Records, Alexandria, VA 22313-1450 or via the Internet.

In addition, information on the status of the application, including the mailing date of Office actions and the dates of receipt of correspondence filed in the Office, may also be accessed via the Internet through the Patent Electronic Business Center at www.uspto.gov using the public side of the Patent Application Information and Retrieval (PAIR) system. The direct link to access this status information is currently http://pair.uspto.gov/. Prior to publication, such status information is confidential and may only be obtained by applicant using the private side of PAIR.

Further assistance in electronically accessing the publication, or about PAIR, is available by calling the Patent Electronic Business Center at 1-866-217-9197.

Office of Data Managment, Application Assistance Unit (571) 272-4000, or (571) 272-4200, or 1-888-786-0101

UNITED STATES PATENT AND TRADEMARK OFFICE

UNITED STATES DEPARTMENT OF COMMERCE
United States Patent and Trademark Office
Address: COMMISSIONER FOR PATENTS
P.O. Box 1450
Alexandria, Virginia 22313-1450
www.uspto.gov

APPLICATION NUMBER	FILING or 371(c) DATE	GRP ART UNIT	FIL FEE REC'D	ATTY.DOCKET.NO	TOT CLAIMS	IND CLAIMS
12/018,370	01/23/2008	2621	665	000007-001100US	25	4

CONFIRMATION NO. 8018

68155
FOUNTAINHEAD LAW GROUP, PC
900 LAFAYETTE STREET
SUITE 509
SANTA CLARA, CA 95050

FILING RECEIPT

OC000000028162833

Date Mailed: 02/11/2008

Receipt is acknowledged of this non-provisional patent application. The application will be taken up for examination in due course. Applicant will be notified as to the results of the examination. Any correspondence concerning the application must include the following identification information: the U.S. APPLICATION NUMBER, FILING DATE, NAME OF APPLICANT, and TITLE OF INVENTION. Fees transmitted by check or draft are subject to collection. Please verify the accuracy of the data presented on this receipt. **If an error is noted on this Filing Receipt, please write to the Office of Initial Patent Examination's Filing Receipt Corrections. Please provide a copy of this Filing Receipt with the changes noted thereon. If you received a "Notice to File Missing Parts" for this application, please submit any corrections to this Filing Receipt with your reply to the Notice. When the USPTO processes the reply to the Notice, the USPTO will generate another Filing Receipt incorporating the requested corrections**

Applicant(s)

Alireza Tarighat-Mehrabani, Marina Del Rey, CA;
Rahim Bagheri, Los Angeles, CA;
Alireza Mehrnia, Los Angeles, CA;
Mahmoud Darvishzadeh, Los Altos Hills, CA;

Assignment For Published Patent Application

WiLinx, Corp., Los Angeles, CA

Power of Attorney: The patent practitioners associated with Customer Number 68155

Domestic Priority data as claimed by applicant

Foreign Applications

If Required, Foreign Filing License Granted: 02/06/2008

The country code and number of your priority application, to be used for filing abroad under the Paris Convention, is **US 12/018,370**

Projected Publication Date: 07/23/2009

Non-Publication Request: No

Early Publication Request: No
**** SMALL ENTITY ****

Title

Wireless Communication Systems and Methods

Preliminary Class

386

PROTECTING YOUR INVENTION OUTSIDE THE UNITED STATES

Since the rights granted by a U.S. patent extend only throughout the territory of the United States and have no effect in a foreign country, an inventor who wishes patent protection in another country must apply for a patent in a specific country or in regional patent offices. Applicants may wish to consider the filing of an international application under the Patent Cooperation Treaty (PCT). An international (PCT) application generally has the same effect as a regular national patent application in each PCT-member country. The PCT process **simplifies** the filing of patent applications on the same invention in member countries, but **does not result** in a grant of "an international patent" and does not eliminate the need of applicants to file additional documents and fees in countries where patent protection is desired.

Almost every country has its own patent law, and a person desiring a patent in a particular country must make an application for patent in that country in accordance with its particular laws. Since the laws of many countries differ in various respects from the patent law of the United States, applicants are advised to seek guidance from specific foreign countries to ensure that patent rights are not lost prematurely.

Applicants also are advised that in the case of inventions made in the United States, the Director of the USPTO must issue a license before applicants can apply for a patent in a foreign country. The filing of a U.S. patent application serves as a request for a foreign filing license. The application's filing receipt contains further information and guidance as to the status of applicant's license for foreign filing.

Applicants may wish to consult the USPTO booklet, "General Information Concerning Patents" (specifically, the section entitled "Treaties and Foreign Patents") for more information on timeframes and deadlines for filing foreign patent applications. The guide is available either by contacting the USPTO Contact Center at 800-786-9199, or it can be viewed on the USPTO website at http://www.uspto.gov/web/offices/pac/doc/general/index.html.

For information on preventing theft of your intellectual property (patents, trademarks and copyrights), you may wish to consult the U.S. Government website, http://www.stopfakes.gov. Part of a Department of Commerce initiative, this website includes self-help "toolkits" giving innovators guidance on how to protect intellectual property in specific countries such as China, Korea and Mexico. For questions regarding patent enforcement issues, applicants may call the U.S. Government hotline at 1-866-999-HALT (1-866-999-4158).

LICENSE FOR FOREIGN FILING UNDER

Title 35, United States Code, Section 184

Title 37, Code of Federal Regulations, 5.11 & 5.15

GRANTED

The applicant has been granted a license under 35 U.S.C. 184, if the phrase "IF REQUIRED, FOREIGN FILING LICENSE GRANTED" followed by a date appears on this form. Such licenses are issued in all applications where the conditions for issuance of a license have been met, regardless of whether or not a license may be required as

set forth in 37 CFR 5.15. The scope and limitations of this license are set forth in 37 CFR 5.15(a) unless an earlier license has been issued under 37 CFR 5.15(b). The license is subject to revocation upon written notification. The date indicated is the effective date of the license, unless an earlier license of similar scope has been granted under 37 CFR 5.13 or 5.14.

This license is to be retained by the licensee and may be used at any time on or after the effective date thereof unless it is revoked. This license is automatically transferred to any related applications(s) filed under 37 CFR 1.53(d). This license is not retroactive.

The grant of a license does not in any way lessen the responsibility of a licensee for the security of the subject matter as imposed by any Government contract or the provisions of existing laws relating to espionage and the national security or the export of technical data. Licensees should apprise themselves of current regulations especially with respect to certain countries, of other agencies, particularly the Office of Defense Trade Controls, Department of State (with respect to Arms, Munitions and Implements of War (22 CFR 121-128)); the Bureau of Industry and Security, Department of Commerce (15 CFR parts 730-774); the Office of Foreign AssetsControl, Department of Treasury (31 CFR Parts 500+) and the Department of Energy.

NOT GRANTED

No license under 35 U.S.C. 184 has been granted at this time, if the phrase "IF REQUIRED, FOREIGN FILING LICENSE GRANTED" DOES NOT appear on this form. Applicant may still petition for a license under 37 CFR 5.12, if a license is desired before the expiration of 6 months from the filing date of the application. If 6 months has lapsed from the filing date of this application and the licensee has not received any indication of a secrecy order under 35 U.S.C. 181, the licensee may foreign file the application pursuant to 37 CFR 5.15(b).

PTO/SB/05 (07-07)
Approved for use through 06/30/2010. OMB 0651-0032
U.S. Patent and Trademark Office. U.S. DEPARTMENT OF COMMERCE
Under the Paperwork Reduction Act of 1995, no persons are required to respond to a collection of information unless it displays a valid OMB control number.

UTILITY PATENT APPLICATION TRANSMITTAL

(Only for new nonprovisional applications under 37 CFR 1.53(b))

Attorney Docket No.	000007-001100US
First Inventor	Tarighat-Mehrabani et al.
Title	Wreless Communication Systems
Express Mail Label No.	

APPLICATION ELEMENTS

See MPEP chapter 600 concerning utility patent application contents.

ADDRESS TO: **Commissioner for Patents**
P.O. Box 1450
Alexandria VA 22313-1450

1. ☐ **Fee Transmittal Form** (e.g., PTO/SB/17)
   (Submit an original and a duplicate for fee processing)
2. ☑ **Applicant claims small entity status.** See 37 CFR 1.27.
3. ☑ **Specification** [*Total Pages* 26]
   Both the claims and abstract must start on a new page
   (For information on the preferred arrangement, see MPEP 608.01(a))
4. ☑ **Drawing(s)** (*35 U.S.C. 113*) [*Total Sheets* 12]
5. **Oath or Declaration** [*Total Sheets* 2]
   a. ☑ Newly executed (original or copy)
   b. ☐ A copy from a prior application (37 CFR 1.63(d))
   (for continuation/divisional with Box 18 completed)
   i. ☐ DELETION OF INVENTOR(S)
   Signed statement attached deleting inventor(s) name in the prior application, see 37 CFR 1.63(d)(2) and 1.33(b).
6. ☑ **Application Data Sheet.** See 37 CFR 1.76
7. ☐ **CD-ROM or CD-R** in duplicate, large table or Computer Program *(Appendix)*
   ☐ Landscape Table on CD
8. **Nucleotide and/or Amino Acid Sequence Submission**
   (if applicable, items a. – c. are required)
   a. ☐ Computer Readable Form (CRF)
   b. Specification Sequence Listing on:
      i. ☐ CD-ROM or CD-R (2 copies); or
      ii. ☐ Paper
   c. ☐ Statements verifying identity of above copies

ACCOMPANYING APPLICATION PARTS

9. ☐ **Assignment Papers** (cover sheet & document(s))
   Name of Assignee _____
10. ☑ **37 CFR 3.73(b) Statement** *(when there is an assignee)* ☑ **Power of Attorney**
11. ☐ **English Translation Document** *(if applicable)*
12. ☐ **Information Disclosure Statement** (PTO/SB/08 or PTO-1449)
    ☐ Copies of citations attached
13. ☐ **Preliminary Amendment**
14. ☐ **Return Receipt Postcard** (MPEP 503)
    (Should be specifically itemized)
15. ☐ **Certified Copy of Priority Document(s)**
    (if foreign priority is claimed)
16. ☐ **Nonpublication Request** under 35 U.S.C. 122(b)(2)(B)(i). Applicant must attach form PTO/SB/35 or equivalent.
17. ☐ Other: _____

18. If a CONTINUING APPLICATION, *check appropriate box, and supply the requisite information below and in the first sentence of the specification following the title, or in an Application Data Sheet under 37 CFR 1.76:*

☐ Continuation ☐ Divisional ☐ Continuation-in-part (CIP) of prior application No.: .....

Prior application information: *Examiner* _____ *Art Unit:* _____

19. CORRESPONDENCE ADDRESS

☑ The address associated with Customer Number: 68155 *OR* ☐ Correspondence address below

Name					
Address					
City		State		Zip Code	
Country		Telephone		Email	

Signature	Chad Walsh	Date	1/23/2008
Name (Print/Type)	Chad R. Walsh	Registration No. (Attorney/Agent)	43,235

This collection of information is required by 37 CFR 1.53(b). The information is required to obtain or retain a benefit by the public which is to file (and by the USPTO to process) an application. Confidentiality is governed by 35 U.S.C. 122 and 37 CFR 1.11 and 1.14. This collection is estimated to take 12 minutes to complete, including gathering, preparing, and submitting the completed application form to the USPTO. Time will vary depending upon the individual case. Any comments on the amount of time you require to complete this form and/or suggestions for reducing this burden, should be sent to the Chief Information Officer, U.S. Patent and Trademark Office, U.S. Department of Commerce, P.O. Box 1450, Alexandria, VA 22313-1450. DO NOT SEND FEES OR COMPLETED FORMS TO THIS ADDRESS. **SEND TO: Commissioner for Patents, P.O. Box 1450, Alexandria, VA 22313-1450.**
If you need assistance in completing the form, call 1-800-PTO-9199 and select option 2.

Application Data Sheet

Application Information

Application number::	
Filing Date::	
Application Type::	Regular
Subject Matter::	Utility
Suggested classification::	
Suggested Group Art Unit::	
CD-ROM or CD-R??::	
Number of CD disks::	
Number of copies of CDs::	
Sequence Submission::	
Computer Readable Form (CRF)?::	
Number of copies of CRF::	
Title::	Wireless Communication Systems and Methods
Attorney Docket Number::	000007-001100US
Request for Early Publication::	No
Request for Non-Publication::	No
Suggested Drawing Figure::	5
Total Drawing Sheets::	12
Small Entity?::	Yes
Latin name::	
Variety denomination name::	
Petition included?::	No
Petition Type::	
Licensed US Govt. Agency::	
Contract or Grant Numbers One::	
Secrecy Order in Parent Appl.::	No

Applicant Information

Applicant Authority Type::	Inventor
Primary Citizenship Country::	Iran
Status::	Full Capacity
Given Name::	Alireza
Middle Name::	
Family Name::	Tarighat-Mehrabani
Name Suffix::	
City of Residence::	Marina Del Rey
State or Province of Residence::	CA
Country of Residence::	US
Street of Mailing Address::	13914 Bora Bora Way #D205
City of Mailing Address::	Marina Del Rey
State or Province of mailing address::	CA
Country of mailing address::	US
Postal or Zip Code of mailing address::	90292

Applicant Authority Type::	Inventor
Primary Citizenship Country::	Iran
Status::	Full Capacity
Given Name::	Rahim
Middle Name::	
Family Name::	Bagheri
Name Suffix::	
City of Residence::	Los Angeles
State or Province of Residence::	CA
Country of Residence::	US
Street of Mailing Address::	1317 S. Westgate Ave., # 302
City of Mailing Address::	Los Angeles
State or Province of mailing address::	CA

Country of mailing address::	US
Postal or Zip Code of mailing address::	90025

Applicant Authority Type::	Inventor
Primary Citizenship Country::	Iran
Status::	Full Capacity
Given Name::	Alireza
Middle Name::	
Family Name::	Mehrnia
Name Suffix::	
City of Residence::	Los Angeles
State or Province of Residence::	CA
Country of Residence::	US
Street of Mailing Address::	3240 Sawtelle Blvd., # 207
City of Mailing Address::	Los Angeles
State or Province of mailing address::	CA
Country of mailing address::	US
Postal or Zip Code of mailing address::	90066

Applicant Authority Type::	Inventor
Primary Citizenship Country::	United Kingdom
Status::	Full Capacity
Given Name::	Mahmoud
Middle Name::	
Family Name::	Darvishzadeh
Name Suffix::	
City of Residence::	Los Altos Hills
State or Province of Residence::	CA
Country of Residence::	US
Street of Mailing Address::	24612 Olive Tree Lane
City of Mailing Address::	Los Altos Hills

State or Province of mailing address::	CA
Country of mailing address::	US
Postal or Zip Code of mailing address::	94024

Correspondence Information

Name::	Chad R. Walsh, Fountainhead Law Group P.C.
Street or mailing address::	900 Lafayette St., Suite 509
City of mailing address::	Santa Clara
State or Province of mailing address::	CA
Postal or Zip Code of mailing address::	95050
Telephone::	(408) 244-6319

Representative Information

Representative Customer Number:: 000068155

Domestic Priority Information

Application::	Continuity Type::	Parent Application::	Parent Filing Date::

Foreign Priority Information

Country::	Application number::	Filing Date::

Assignee Information

Assignee Name::	WiLinx, Corp.
Street of mailing address::	12400 Wilshire Blvd., Suite #370
City of mailing address::	Los Angeles
State or Province of mailing address::	CA
Country of mailing address::	USA
Postal or Zip Code of mailing address::	90025

PTO/SB/01A (07-07)
Approved for use through 06/30/2010. OMB 0651-0032
U.S. Patent and Trademark Office; U.S. DEPARTMENT OF COMMERCE
Under the Paperwork Reduction Act of 1995, no persons are required to respond to a collection of information unless if displays a valid OMB control number.

DECLARATION (37 CFR 1.63) FOR UTILITY OR DESIGN APPLICATION USING AN APPLICATION DATA SHEET (37 CFR 1.76)

Title of Invention	Wireless Communication Systems and Methods

As the below named inventor(s), I/we declare that:

This declaration is directed to:

☑ The attached application, or

☐ Application No. _____ filed on _____

☐ As amended on _____ (if applicable);

I/we believe that I/we am/are the original and first inventor(s) of the subject matter which is claimed and for which a patent is sought;

I/we have reviewed and understand the contents of the above-identified application, including the claims, as amended by any amendment specifically referred to above;

I/we acknowledge the duty to disclose to the United States Patent and Trademark Office all information known to me/us to be material to patentability as defined in 37 CFR 1.56, including for continuation-in-part applications, material information which became available between the filing date of the prior application and the national or PCT International filing date of the continuation-in-part application.

WARNING:

Petitioner/applicant is cautioned to avoid submitting personal information in documents filed in a patent application that may contribute to identity theft. Personal information such as social security numbers, bank account numbers, or credit card numbers (other than a check or credit card authorization form PTO-2038 submitted for payment purposes) is never required by the USPTO to support a petition or an application. If this type of personal information is included in documents submitted to the USPTO, petitioners/applicants should consider redacting such personal information from the documents before submitting them to the USPTO. Petitioner/applicant is advised that the record of a patent application is available to the public after publication of the application (unless a non-publication request in compliance with 37 CFR 1.213(a) is made in the application) or issuance of a patent. Furthermore, the record from an abandoned application may also be available to the public if the application is referenced in a published application or an issued patent (see 37 CFR 1.14). Checks and credit card authorization forms PTO-2038 submitted for payment purposes are not retained in the application file and therefore are not publicly available.

All statements made herein of my/our own knowledge are true, all statements made herein on information and belief are believed to be true, and further that these statements were made with the knowledge that willful false statements and the like are punishable by fine or imprisonment, or both, under 18 U.S.C. 1001, and may jeopardize the validity of the application or any patent issuing thereon.

FULL NAME OF INVENTOR(S)

Inventor one: Alireza Tarighat-Mehrabani Date: Jan 4th, 2008

Signature: [signature] Citizen of: Iran

Inventor two: Rahim Bagheri Date: Jan 4th/08

Signature: [signature] Citizen of: Iran

☑ Additional inventors or a legal representative are being named on 1 additional form(s) attached hereto.

This collection of information is required by 35 U.S.C. 115 and 37 CFR 1.63. The information is required to obtain or retain a benefit by the public which is to file (and by the USPTO to process) an application. Confidentiality is governed by 35 U.S.C. 122 and 37 CFR 1.11 and 1.14. This collection is estimated to take 1 minute to complete, including gathering, preparing, and submitting the completed application form to the USPTO. Time will vary depending upon the individual case. Any comments on the amount of time you require to complete this form and/or suggestions for reducing this burden, should be sent to the Chief Information Officer, U.S. Patent and Trademark Office, U.S. Department of Commerce, P.O. Box 1450, Alexandria, VA 22313-1450. DO NOT SEND FEES OR COMPLETED FORMS TO THIS ADDRESS. **SEND TO: Commissioner for Patents, P.O. Box 1450, Alexandria, VA 22313-1450.**
If you need assistance in completing the form, call 1-800-PTO-9199 and select option 2.

Under the Paperwork Reduction Act of 1995, no persons are required to respond to a collection of information unless it contains a valid OMB control number.

DECLARATION

ADDITIONAL INVENTOR(S)
Supplemental Sheet

Name of Additional Joint Inventor, if any: ☐ A petition has been filed for this unsigned inventor

Given Name (first and middle (if any))	Family Name or Surname
Alireza	Mehrnia

Inventor's Signature	Date
Alireza Mehrnia	Jan 3, 2008

Residence: City	State	Country	Citizenship
Los Angeles	CA	United States	Iran

3240 Sawtelle Blvd #207
Mailing Address

City	State	Zip	Country
Los Angeles	CA	90066	United States

Name of Additional Joint Inventor, if any: ☐ A petition has been filed for this unsigned inventor

Given Name (first and middle (if any))	Family Name or Surname
Mahmoud	Darvishzadeh

Inventor's Signature	Date
	Jan 3 2008

Residence: City	State	Country	Citizenship
Los Altos Hills	CA	United States	United Kingdom

24612 Olive Tree Lane
Mailing Address

City	State	Zip	Country
Los Altos Hills	CA	94024	United States

Name of Additional Joint Inventor, if any: ☐ A petition has been filed for this unsigned inventor

Given Name (first and middle (if any))	Family Name or Surname

Inventor's Signature	Date

Residence: City	State	Country	Citizenship

Mailing Address

City	State	Zip	Country

This collection of information is required by 35 U.S.C. 115 and 37 CFR 1.63. The information is required to obtain or retain a benefit by the public which is to file (and by the USPTO to process) an application. Confidentiality is governed by 35 U.S.C. 122 and 37 CFR 1.11 and 1.14. This collection is estimated to take 21 minutes to complete, including gathering, preparing, and submitting the completed application form to the USPTO. Time will vary depending upon the individual case. Any comments on the amount of time you require to complete this form and/or suggestions for reducing this burden, should be sent to the Chief Information Officer, U.S. Patent and Trademark Office, U.S. Department of Commerce, P.O. Box 1450, Alexandria, VA 22313-1450. DO NOT SEND FEES OR COMPLETED FORMS TO THIS ADDRESS. **SEND TO: Commissioner for Patents, P.O. Box 1450, Alexandria, VA 22313-1450.**

If you need assistance in completing the form, call 1-800-PTO-9199 (1-800-786-9199) and select option 2.

PTO/SB/81 (01-06)
Approved for use through 12/31/2008. OMB 0651-0035
U.S. Patent and Trademark Office; U.S. DEPARTMENT OF COMMERCE
Under the Paperwork Reduction Act of 1995, no persons are required to respond to a collection of information unless it displays a valid OMB control number.

POWER OF ATTORNEY and CORRESPONDENCE ADDRESS INDICATION FORM

Application Number	Unassigned
Filing Date	Herewith
First Named Inventor	Alireza Tarighat-Mehrabani et al.
Title	Wireless Communication
Art Unit	Unassigned
Examiner Name	Unassigned
Attorney Docket Number	000007-001100US

I hereby revoke all previous powers of attorney given in the above-identified application.

I hereby appoint:

☑ Practitioners associated with the Customer Number: 68155

OR

☐ Practitioner(s) named below:

Name	Registration Number

as my/our attorney(s) or agent(s) to prosecute the application identified above, and to transact all business in the United States Patent and Trademark Office connected therewith.

Please recognize or change the correspondence address for the above-identified application to:

☑ The address associated with the above-mentioned Customer Number:

OR

☐ The address associated with Customer Number:

OR

☐ Firm or Individual Name					
Address					
City		State		Zip	
Country					
Telephone		Email			

I am the:

☐ Applicant/Inventor.

☑ Assignee of record of the entire interest. See 37 CFR 3.71.
Statement under 37 CFR 3.73(b) is enclosed. (Form PTO/SB/96)

SIGNATURE of Applicant or Assignee of Record

Signature		Date	Jan. 04, 2008
Name	Masoud Djafari	Telephone	310-571-1701
Title and Company	CEO, WiLinx Corp.		

NOTE: Signatures of all the inventors or assignees of record of the entire interest or their representative(s) are required. Submit multiple forms if more than one signature is required, see below*.

☐ *Total of _____ forms are submitted.

This collection of information is required by 37 CFR 1.31, 1.32 and 1.33. The information is required to obtain or retain a benefit by the public which is to file (and by the USPTO to process) an application. Confidentiality is governed by 35 U.S.C. 122 and 37 CFR 1.11 and 1.14. This collection is estimated to take 3 minutes to complete, including gathering, preparing, and submitting the completed application form to the USPTO. Time will vary depending upon the individual case. Any comments on the amount of time you require to complete this form and/or suggestions for reducing this burden, should be sent to the Chief Information Officer, U.S. Patent and Trademark Office, U.S. Department of Commerce, P.O. Box 1450, Alexandria, VA 22313-1450. DO NOT SEND FEES OR COMPLETED FORMS TO THIS ADDRESS. **SEND TO: Commissioner for Patents, P.O. Box 1450, Alexandria, VA 22313-1450.**

If you need assistance in completing the form, call 1-800-PTO-9199 and select option 2.

Under the Paperwork Reduction Act of 1995, no persons are required to respond to a collection of information unless it displays a valid OMB control number.

STATEMENT UNDER 37 CFR 3.73(b)

Applicant/Patent Owner: Alireza Tarighat-Mehrabani et al.

Application No./Patent No.: Not assigned Filed/Issue Date: Herewith

Entitled: Wireless Communication Systems and Methods

WiLinx Corp., a California Corporation
(Name of Assignee) (Type of Assignee, e.g., corporation, partnership, university, government agency, etc.)

states that it is:

1. ☑ the assignee of the entire right, title, and interest; or

2. ☐ an assignee of less than the entire right, title and interest
(The extent (by percentage) of its ownership interest is_____ %)

in the patent application/patent identified above by virtue of either:

A. ☑ An assignment from the inventor(s) of the patent application/patent identified above. The assignment was recorded in the United States Patent and Trademark Office at Reel _____, Frame _____, or for which a copy thereof is attached.

OR

B. ☐ A chain of title from the inventor(s), of the patent application/patent identified above, to the current assignee as follows:

1. From: _____ To: _____
The document was recorded in the United States Patent and Trademark Office at
Reel _____, Frame _____, or for which a copy thereof is attached.

2. From: _____ To: _____
The document was recorded in the United States Patent and Trademark Office at
Reel _____, Frame _____, or for which a copy thereof is attached.

3. From: _____ To: _____
The document was recorded in the United States Patent and Trademark Office at
Reel _____, Frame _____, or for which a copy thereof is attached.

☐ Additional documents in the chain of title are listed on a supplemental sheet.

☑ As required by 37 CFR 3.73(b)(1)(i), the documentary evidence of the chain of title from the original owner to the assignee was, or concurrently is being, submitted for recordation pursuant to 37 CFR 3.11.

[NOTE: A separate copy (*i.e.*, a true copy of the original assignment document(s)) must be submitted to Assignment Division in accordance with 37 CFR Part 3, to record the assignment in the records of the USPTO. See MPEP 302.08]

The undersigned (whose title is supplied below) is authorized to act on behalf of the assignee.

Signature	Jan. 04, 2008 Date
Masoud Djafari Printed or Typed Name	310-571-1701 Telephone Number
CEO Title	

This collection of information is required by 37 CFR 3.73(b). The information is required to obtain or retain a benefit by the public which is to file (and by the USPTO to process) an application. Confidentiality is governed by 35 U.S.C. 122 and 37 CFR 1.11 and 1.14. This collection is estimated to take 12 minutes to complete, including gathering, preparing, and submitting the completed application form to the USPTO. Time will vary depending upon the individual case. Any comments on the amount of time you require to complete this form and/or suggestions for reducing this burden, should be sent to the Chief Information Officer, U.S. Patent and Trademark Office, U.S. Department of Commerce, P.O. Box 1450, Alexandria, VA 22313-1450. DO NOT SEND FEES OR COMPLETED FORMS TO THIS ADDRESS. **SEND TO: Commissioner for Patents, P.O. Box 1450, Alexandria, VA 22313-1450.**

If you need assistance in completing the form, call 1-800-PTO-9199 and select option 2.

COPY

Attorney Docket No.: 000007-001100US

ASSIGNMENT OF PATENT APPLICATION

JOINT

WHEREAS, Alireza Tarighat-Mehrabani, a citizen of Iran, residing at 13914 Bora Bora Way #D205, Marina Del Rey, CA 90292; Rahim Bagheri, a citizen of Iran, residing at 1317 S. Westgate Ave., #302, Los Angeles, CA 90025; Alireza Mehrnia, a citizen of Iran, residing at 3240 Sawtelle Blvd #207, Los Angeles, CA 90066; and Mahmoud Darvishzadeh a citizen of the United Kingdom, residing at 24612 Olive Tree Lane, Los Altos Hills, CA 94024, hereinafter referred to as "Assignors," are the inventors of the invention described and set forth in the below-identified application for United States Letters Patent:

Title of Invention: Wireless Communication Systems and Methods

Date(s) of execution of Declaration: 01/04/08 ; 01/03/08 ; and

Filing Date: 01/23/08

WHEREAS, WiLinx Corp., a corporation of the state of California, located at 12400 Wilshire Blvd., Ste. 370, Los Angeles, CA. 90025, hereinafter referred to as "ASSIGNEE," is desirous of acquiring an interest in the invention and application and in any U.S. Letters Patent and Registrations which may be granted on the same;

For good and valuable consideration, receipt of which is hereby acknowledged by Assignors, Assignors have assigned, and by these presents do assign to Assignee all right, title and interest in and to the invention and application and to all foreign counterparts (including patent, utility model and industrial designs), and in and to any Letters Patent and Registrations which may hereafter be granted on the same in the United States and all countries throughout the world, and to claim the priority from the application as provided by the Paris Convention. The right, title and interest is to be held and enjoyed by Assignee and Assignee's successors and assigns as fully and exclusively as it would have been held and enjoyed by Assignors had this Assignment not been made, for the full term of any Letters Patent and Registrations which may be granted thereon, or of any division, renewal, continuation in whole or in part, substitution, conversion, reissue, prolongation or extension thereof.

Assignors further agree that they will, without charge to Assignee, but at Assignee's expense, (a) cooperate with Assignee in the prosecution of U.S. Patent applications and foreign counterparts on the invention and any improvements, (b) execute, verify, acknowledge and deliver all such further papers, including patent applications and instruments of transfer, and (c) perform such other acts as Assignee lawfully may request to obtain or maintain Letters Patent and Registrations for the invention and improvements in any and all countries, and to vest title thereto in Assignee, or Assignee's successors and assigns.

Assignors hereby authorize and request Chad R. Walsh of Fountainhead Law Group P.C., 900 Lafayette St., Ste. 509, Santa Clara, CA 95050, to insert herein above the date of execution of declaration and filing date of said application when known.

IN TESTIMONY WHEREOF, Assignors have signed their names on the dates indicated.

Dated: Jan 4th, 2008 — Alireza Tarighat-Mehrabani

Dated: Jan 4th, 2008 — Rahim Bagheri

Dated: Jan 3, 2008 — Alireza Mehrnia

Dated: Jan 3, 2008 — Mahmoud Darvishzadeh

PATENT APPLICATION

Wireless Communication Systems and Methods

Inventors: Alireza Tarighat-Mehrabani, a citizen of Iran, residing at
13914 Bora Bora Way #D205
Marina Del Rey, CA 90292

Rahim Bagheri, a citizen of Iran, residing at
1317 S. Westgate Ave., #302
Los Angeles, CA 90025

Alireza Mehrnia, a citizen of Iran, residing at
3240 Sawtelle Blvd #207
Los Angeles CA 90066

Mahmoud Darvishzadeh, a citizen of the United Kingdom, residing at
24612 Olive Tree Lane
Los Altos Hills, CA 94024

Assignee: WiLinx, Corp.
12400 Wilshire Blvd., Suite #370
Los Angeles, CA. 90025

Entity: Small

FOUNTAINHEAD LAW GROUP P.C.
900 Lafayette St., Suite 509
Santa Clara, CA 95050
Tel: 408-244-6319

Wireless Communication Systems and Methods

BACKGROUND

[0001] The present invention relates to wireless electronics, and in particular, to wireless communication systems and methods.

[0002] Unless otherwise indicated herein, the approaches described in this section are not prior art to the claims in this application and are not admitted to be prior art by inclusion in this section.

[0003] Communication systems generally contain one or more transmission channels to transmit data from the transmitter to the receiver. The components included in a transmitter and receiver may vary depending on the attributes of the communication channel, the signaling, and the goals of the transmission channel. Fig. 1 illustrates an example of a transmitter 100 used in a wireless communication system. Here, a digital-to-analog converter ("DAC") 110 receives a digital input signal ("IN"). The DAC converts a digital signal to an analog signal. This may be necessary in communication systems that take advantage of digital signal processing. The DAC is coupled to the input of filter 120. The filter may be used to remove undesirable frequencies and signal images. The filter is then coupled to mixer 130. The mixer may be used to up-convert the frequency of the signal by combining it with a local oscillator signal ("LO"). The output of the mixer is coupled to power amplifier 140 to amplify the signal for transmission before it is sent through antenna 150. The transmitter 100 is limited to up-converting a signal to one center frequency (or modulation frequency), which is the LO frequency. Typically, the amount of information transmitted around the center frequency is limited by the bandwidth of the transmitter around the center frequency. Accordingly, this limits the amount of data that can be transmitted. Typical prior art approaches to improving the information capacity in a wireless communication system involve maximizing the bandwidth around the center frequency to increase the amount of information that may be modulated onto the carrier frequency.

[0004] Another limitation to wireless communication involves allowable output power. In many countries, regional authorities will limit the amount of power that may be transmitted at any given frequency or across a range of frequencies. In other words, when a transmitter transmits a signal at a particular center frequency, the transmitter may be required to output less than a specified upper limit of power per Megahertz. This limitation may limit the

reliability, the range, and the effective throughput of data transmission. Transmission range, reliability, throughput, complexity, and cost all play a role in enabling new wireless applications. Since there is a continuing need for new wireless devices, these and other issues, concerning the transmission and reception of radio frequency (RF) signals, become important. Thus, there is a need for improvements in wireless communication systems and methods.

SUMMARY

[0005] Embodiments of the present invention improve wireless communication systems and methods. In one embodiment, the present invention includes a method of transmitting information in a wireless communication channel comprising transmitting first information across a first frequency range using a wireless transmitter, the first frequency range having a first center frequency, a first highest frequency, and a first lowest frequency, and simultaneously transmitting second information across a second frequency range using the same wireless transmitter, the second frequency range having a second center frequency greater than the first center frequency, a second highest frequency, and a second lowest frequency.

[0006] In one embodiment, the frequency difference between the first center frequency and the second center frequency is greater than the sum of one-half the first frequency range and one-half the second frequency range.

[0007] In one embodiment, the first and second information are transmitted using the same power amplifier in said wireless transmitter.

[0008] In one embodiment, the bandwidth of said power amplifier is greater than the difference between the first lowest frequency and the second highest frequency.

[0009] In one embodiment, first information and second information comprise a plurality of OFDM symbols, wherein a first symbol is transmitted during a first time slot across the first frequency range and a second symbol is transmitted during the first time slot across the second frequency range, and wherein a third symbol is transmitted during a second time slot across the first frequency range and a fourth symbol is transmitted during the second time slot across a second frequency range.

[0010] In one embodiment, the present invention further comprises concurrently changing the first center frequency to a third center frequency and the second center frequency to a

fourth center frequency, wherein the fourth center frequency is greater than the third center frequency, and wherein the first center frequency changes by at least the first frequency range and the second center frequency changes by at least the second frequency range, and wherein the bandwidth of said power amplifier is greater than the difference between the first lowest frequency and the second highest frequency for the changed first and second center frequencies.

[0011] In one embodiment, the first information corresponds to a first wireless protocol and the second information corresponds to a second wireless protocol.

[0012] In one embodiment, the first information and the second information are the same data transmitted across two different frequencies.

[0013] In one embodiment, the first information and the second information are produced from the same data stream using coding or data mapping.

[0014] In one embodiment, the present invention includes a method of transmitting information in a wireless communication channel comprising receiving a first digital signal comprising first data to be transmitted, receiving a second digital signal comprising second data to be transmitted, converting the first digital signal into a first analog signal using a first digital-to-analog converter, the first analog signal carrying the first data across a first frequency range, converting the second digital signal into a second analog signal using a second digital-to-analog converter, the second analog signal carrying the second data across a second frequency range, up-converting the first analog signal to a first RF center frequency to produce a first up-converted analog signal, wherein the first up-converted analog signal comprises a first up-converted frequency range from the first RF center frequency minus one-half the first frequency range to the first RF center frequency plus one-half the first frequency range, up-converting the second analog signal to a second RF center frequency greater than the first center RF frequency to produce a second up-converted analog signal, wherein the second up-converted analog signal comprises a second up-converted frequency range from the second RF center frequency minus one-half the second frequency range to the second RF center frequency plus one-half the second frequency range, and wherein a frequency difference between the first RF center frequency and the second RF center frequency is greater than the sum of one-half the first frequency range and one-half the second frequency range, combining the first up-converted analog signal and the second up-converted analog signal to produce a combined up-converted signal, amplifying the combined up-converted

signal in a power amplifier resulting in an amplified combined up-converted signal, and transmitting the amplified combined up-converted signal on a first antenna, wherein the bandwidth of said power amplifier is greater than the difference between a lowest frequency in the first up-converted frequency range and a highest frequency in the second up-converted frequency range.

[0015] In one embodiment, the present invention further comprises changing the first and second RF center frequencies, and in accordance therewith, up-converting the first analog signals to the changed first and second RF center frequencies, wherein the first RF center frequency changes by at least the first frequency range and the second RF center frequency changes by at least the second frequency range.

[0016] In one embodiment, the first and second RF center frequencies are changed concurrently.

[0017] In one embodiment, the first digital signal is encoded using a first wireless protocol and the second digital signal is encoded using a second wireless protocol.

[0018] In one embodiment, the second data is the same as the first data, the present invention further comprises receiving the transmitted signal on a second antenna, amplifying the received signal in a low noise amplifier resulting in an amplified received up-converted signal, wherein the bandwidth of said low noise amplifier is greater than the difference between the lowest frequency in the first up-converted frequency range and the highest frequency in the second up-converted frequency range, down-converting the amplified received up-converted signal using a first down-converter and a signal corresponding to the first RF center frequency to produce a fourth analog signal corresponding to the first analog signal, and down-converting the amplified received up-converted analog signal using a second down-converter and a signal corresponding to the second RF center frequency to produce a fifth analog signal corresponding to the second analog signal.

[0019] In one embodiment, the present invention further comprises filtering the fourth analog signal using a third filter and filtering the fifth analog signal using a fourth filter, converting the filtered fourth analog signal into a third digital signal using a first analog-to-digital converter and converting the filtered fifth analog signal into a fourth digital signal using a second analog-to-digital converter, and combining the third and fourth digital signals to receive data corresponding to the first data.

[0020] In one embodiment, the present invention further comprises combining the fourth and fifth analog signals resulting in a sixth signal, and converting the sixth signal into a third digital signal using a first analog-to-digital converter, and in accordance therewith, receiving data corresponding to the first data.

[0021] In one embodiment, the present invention includes a wireless communication system comprising a baseband digital system for providing a first digital signal comprising a first data to be transmitted and a second digital signal comprising a second data to be transmitted, a first digital-to-analog converter for receiving the first digital signal and converting the first digital signal into a first analog signal, the first analog signal carrying the first data across a first frequency range, a second digital-to-analog converter for receiving the second digital signal and converting the second digital signal into a second analog signal, the second analog signal carrying the second data across a second frequency range, a first up-converter circuit having a first input coupled to receive the first analog signal and a second input coupled to receive a first modulation signal having a first RF frequency, wherein the first up-converter outputs a first up-converted analog signal comprising a first up-converted frequency range from the first RF frequency minus one-half the first frequency range to the first RF frequency plus one-half the first frequency range, a second up-converter circuit having a first input coupled to receive the second analog signal and a second input coupled to receive a second modulation signal having a second RF frequency, wherein the second up-converter outputs a second up-converted analog signal comprising a second up-converted frequency range from the second RF frequency minus one-half the second frequency range to the second RF frequency plus one-half the second frequency range, and wherein frequency difference between the first RF frequency and the second RF frequency is greater than the sum of one-half the first frequency range and one-half the second frequency range, and a power amplifier coupled to receive the first and second up-converted analog signals, wherein the bandwidth of the power amplifier is greater than the difference between a lowest frequency in the first up-converted frequency range and a highest frequency in the second up-converted frequency range.

[0022] In one embodiment, the first RF frequency and the second RF frequency change within the bandwidth of the power amplifier.

[0023] In one embodiment, the first RF frequency and the second RF frequency change concurrently.

[0024] In one embodiment, the first RF frequency and the second RF frequency change periodically.

[0025] In one embodiment, the first data of the first digital signal is encoded using a first wireless protocol and the first data of the second digital signal is encoded using a second wireless protocol.

[0026] In one embodiment, the second data corresponds to the first data, and wherein the power amplifier outputs a third up-converted signal comprising the up-converted first analog signal and the up-converted second analog signal.

[0027] In one embodiment, the first and second data to be transmitted comprise a plurality of OFDM symbols, wherein a first symbol is transmitted during a first time slot across the first up-converted frequency range and a second symbol is transmitted during the first time slot across the second up-converted frequency range, and wherein a third symbol is transmitted during a second time slot across the first up-converted frequency range and a fourth symbol is transmitted during the second time slot across a second up-converted frequency range.

[0028] In another embodiment, the present invention includes an electronic circuit comprising a first down-converter circuit having a first input coupled to receive a first up-converted signal, a second input coupled to receive a first demodulation signal having a first RF frequency, and an output, wherein the first down-converter circuit outputs a first down-converted signal on the first down-converter output, a second down-converter circuit having a first input coupled to receive the first up-converted signal, a second input coupled to receive a second demodulation signal having a second RF frequency different than the first RF frequency, and an output, wherein the second down-converter outputs a second down-converted signal on the second down-converter output, wherein the first up-converted signal comprises a first signal modulated at the first RF frequency and a second signal modulated at the second RF frequency, and a filter having an input coupled to the output of the first down-converter and the output of the second down-converter, and in accordance therewith, the filter receives the first and second down-converted signals.

[0029] In one embodiment, first signal has a first frequency range and the second signal has a second frequency range, and wherein the frequency difference between the first RF frequency and the second RF frequency is greater than the sum of one-half the first frequency range and one-half the second frequency range.

[0030] The following detailed description and accompanying drawings provide a better understanding of the nature and advantages of the present invention.

BRIEF DESCRIPTION OF THE DRAWINGS

[0031] Fig. 1 illustrates a segment of a transmitter in a wireless communication system.

[0032] Fig. 2 illustrates a wireless communication system according to one embodiment of the present invention.

[0033] Fig. 3 illustrates an example transmitted signal according to one embodiment of the present invention.

[0034] Fig. 4 illustrates an example of wireless communication according to one embodiment of the present invention.

[0035] Fig. 5 illustrates a wireless communication system according to another embodiment of the present invention.

[0036] Fig. 6 illustrates a wireless communication method according to one embodiment of the present invention.

[0037] Fig. 7A and 7B illustrate a wireless communication method according to another embodiment of the present invention.

[0038] Fig. 8 illustrates a wireless communication transmitter according to one embodiment of the present invention.

[0039] Fig. 9 illustrates a wireless communication receiver according to one embodiment of the present invention.

[0040] Fig. 10 illustrates a wireless communication transmitter according to one embodiment of the present invention.

[0041] Fig. 11 illustrates a wireless communication receiver according to one embodiment of the present invention.

DETAILED DESCRIPTION

[0042] Described herein are techniques for wireless communication systems and methods. In the following description, for purposes of explanation, numerous examples and specific details are set forth in order to provide a thorough understanding of the present invention. It will be evident, however, to one skilled in the art that the present invention as defined by the

claims may include some or all of the features in these examples alone or in combination with other features described below, and may further include modifications and equivalents of the features and concepts described herein.

[0043] Fig. 2 illustrates a wireless communication system according to one embodiment of the present invention. System 200 includes digital-to-analog converter (DAC) 201, DAC 202, filter 203, filter 204, up-converter 205 (such as a mixer), up-converter 206, synthesizer 207, power amplifier 208, and antenna 209. Fig. 3 illustrates an example of the frequency content of the transmitted signal 300 which may result from system 200. Information (i.e., data) to be transmitted may be received in a baseband digital system 250, such as a wireless digital baseband processor. The baseband digital system 250 provides a first digital signal that comprises first digital data 251 to be transmitted to "IN1" and provides a second digital signal that comprises second digital data 252 to be transmitted to "IN2". The data 252 and data 252 may be packets of data that conform to a specific wireless communication protocol, for example. Baseband digital system 250 may deserialize a data stream (e.g., using a demultiplexing function) to divide data packets between the two transmitter channels, for example. As another example, the original information data may be passed through an encoder and the output of the encoder would be split into two streams providing inputs 251 and 252. The data of the first digital signal and the data of the second digital may be unrelated data steams or may be data from the same data stream, for example.

[0044] In this example, the input of DAC 201 is coupled to a first data output of the baseband processor 250, and the first digital signal is converted to a first analog signal by DAC 201. Similarly, the input of DAC 202 is coupled to a second data output of baseband processor 250, and the second digital signal is converted to a second analog signal by DAC 202. The output of DAC 201 is coupled to the input of filter 203, and the first analog signal is filtered by filter 203 to remove unwanted frequency content (e.g., remove aliasing). Similarly, the output of DAC 202 is coupled to the input of filter 204, and the second analog signal is filtered by filter 204 to remove unwanted frequency content.

[0045] A first input of up-converter 205 is coupled to the output of filter 203 to receive the first analog signal and a second input of up-converter 205 is coupled to synthesizer 207 to receive a first modulation signal having a first RF center frequency 303 (f_1) as shown in Fig. 3. Accordingly, the first analog signal is up-converted around a center frequency of f_1 by up-converter 205 to generate a first up-converted analog signal 301. The first up-converted

analog signal 301 includes a first up-converted frequency range 305. It can be seen from Fig. 3 that the first up-converted frequency range is from the first RF frequency 303 minus one-half the first up-converted frequency range to the first RF frequency plus the one-half the first up-converted frequency range.

[0046] Similarly, a first input of up-converter 206 is coupled to the output of filter 204 to receive the second analog signal and a second input of up-converter 206 is coupled to synthesizer 207 to receive a second modulation signal having a second RF center frequency 304 (f_2) as shown in Fig. 3. Accordingly, the second analog signal is up-converted around a center frequency of f_2 by up-converter 206 to generate a second up-converted analog signal 302. The second up-converted analog signal 302 includes a second up-converted frequency range 306. It can be seen from Fig. 3 that the second up-converted frequency range is from the second RF frequency 304 minus one-half the second up-converted frequency range to the second RF frequency plus the one-half the second up-converted frequency range. Additionally, Fig. 3 illustrates that a frequency difference between the first RF center frequency and the second RF center frequency is greater than the sum of one-half the first frequency range and one-half the second frequency range so that the up-converted signals do not overlap and thereby cause distortion. In general, either two synthesizers can be used to generate f1 and f2, or a single synthesizer with the capability of producing f1 and f2 simultaneously.

[0047] A power amplifier 208 (PA) is coupled to receive the first and second up-converted analog signals 301 and 302. The first and second up-converted signals may be simply added together at the input of PA. Embodiments of the present invention transmit multiple signals simultaneously over a communication channel at different center frequencies, and may use a single power amplifier and antenna. In another embodiment, two or more power amplifiers may be used as part of the power amplifier implementation. In this example, the bandwidth 309 (BW_{PA}) of the PA 208 is greater than the difference between a lowest frequency 307 (f_{low}) in the first up-converted frequency range 305 and highest frequency 308 (f_{high}) in the second up-converted frequency range 306. The input of amplifier 208 is coupled to the outputs of up-converters 205 and 206. Accordingly, the first and second up-converted analog signals are combined at the input of amplifier 208 before amplification to produce a combined up-converted signal. The amplifier 208 outputs an amplified up-converted signal comprising the first up-converted analog signal and the second up-converted analog signal. The antenna 209 is coupled to the output of amplifier 208 to transmit the amplified up-

converted signal as an electromagnetic signal. When the bandwidth 309 of PA 208 covers a wide bandwidth, many up-converted signals may be transmitted using the single power amplifier 208 and a single antenna 209. Since only a single antenna is utilized, the application may not require multiple power amplifiers and antennas, which reduces area and cost while increasing data throughput or, as illustrated below, reliability.

[0048] Fig. 4 illustrates an example of how the frequency content can move within a bandwidth according to one embodiment of the present invention. Communication system 200 may generate frequency content 400 comprising the first up-converted analog signal 401 and the second up-converted analog signal 402. The synthesizer 207 may receive instructions from the baseband processor 250, for example, to change the first RF center frequency 403 (f_{1A}) and second frequency RF center frequency 404 (f_{2A}) within a bandwidth 440 (BW_{PA}). The change in frequency may occur concurrently, for example. This may result in a new frequency content 410 in which the signal 401 has moved in frequency as illustrated by signal 411 having an RF center frequency 413 (f_{1B}), and the signal 402 has moved in frequency as illustrated by signal 412 having an RF center frequency 414 (f_{2B}). Some time later the RF frequencies can change again. This may result in a new frequency content 420 in which the signal 411 has changed to 421 with fifth RF frequency 423 (f_{1C}) and the signal 412 has changed to signal 422 with sixth RF frequency 424 (f_{2C}). Some time later the RF frequencies may change again. In this example, another change may return the RF signals to the original locations in frequency illustrated in frequency content 400. This cycle may repeat itself again or begin a different cycle. Different implementations may change the RF center frequencies between a variety of locations. For example, the changes may move the RF signals to adjacent or non-adjacent locations, or the signal 401 may be moved to higher frequencies than signal 401. Additionally, the changes in RF frequency can happen at irregular intervals or at regular intervals (periodically). As illustrated in Fig. 2, synthesizer 207 may be coupled to baseband processor 250 for controlling the frequencies generated at each synthesizer output. For example, synthesizer 207 may be programmed or otherwise configured to generate modulation signals with RF frequencies illustrated in Figs. 3 and 4. Synthesizer 207 may then be reprogrammed or otherwise reconfigured to change the RF frequencies as described above. Furthermore, the spacing between the two RF center frequencies may remain the same or may vary. One or more data streams from the same or different sources may be transmitted using a single power amplifier wherein the bandwidth of said power amplifier is greater than the difference between a lowest frequency in the first up-

converted frequency range (f_{low}) and a highest frequency in the second up-converted frequency range (f_{high}).

[0049] Another embodiment of the invention may utilize a first wireless protocol to encode the first digital data and utilize a second wireless protocol to encode the second digital data. Almost any existing protocol may be used as the first protocol or second protocol. An ultra-wideband (UWB) protocol such as WiMedia, wireless local area network (WLAN) protocol such as 802.11.g, or cellular standard may be used. A Orthogonal frequency domain multiplexing (OFDM) or a code division multiple access CDMA modulation may be used, for example.

[0050] Fig. 5 illustrates a wireless communication system according to another embodiment of the present invention. System 500 includes an antenna 501, low noise amplifier 502 (LNA), a down-converter 504, a down-converter 505, a synthesizer 503, filters 506 and 507, and analog-to-digital converters (ADC) 560 and 570. Frequency content 510 may be transmitted as the first electromagnetic signal described above and received by antenna 501. The electromagnetic signal received by antenna 501 may include an up-converted analog signal from a transmitter as described above including signals 511 and 512. As mentioned above, the signals 511 and 512 carry different data from a common data stream or from different data streams, data corresponding to different protocols, or even the same data. Signal 511 may be an analog signal up-converted to a first RF center frequency, and signal 512 may an analog signal up-converted to a second RF center frequency. A low noise amplifier 502 has an input coupled to antenna 501 to receive the up-converted RF signals, and outputs an amplified up-converted signal. In a differential system the output of the LNA may be two signal lines (i.e., a differential signal), for example. A first down-converter 504 includes a first input that is coupled to the output of LNA 502 to receive the amplified RF signal. The first down-converter 504 includes a second input coupled to receive a signal corresponding to the first RF center frequency (i.e., a demodulation signal having a frequency such as f1) from synthesizer 503. The first down-converter 504 outputs a first down-converted analog signal. The first down-converted analog signal corresponds to the analog signal carrying information across frequency range 515, which was provided to an up-converter in the transmitter that generated signal 510. A second down-converter 505 includes an input that is coupled to the output of LNA 502 to receive the amplified up-converted signal. The second down-converter 505 includes an input that is coupled to a signal corresponding to the second RF frequency (f2) from synthesizer 503. The second down-

converter 505 outputs a second down-converted analog signal. The second down-converted analog signal from down-converter 505 corresponds to an analog signal carrying information across frequency range 516, which was provided to an up-converter in the transmitter that generated signal 510. The output of down-converter 504 is coupled to the input of filter 506 to receive the first down-converted analog signal. Similarly, the output of down-converter 505 is coupled to the input of filter 507 to receive the second down-converted analog signal. The filters eliminate frequency content outside the frequency band of interest. As illustrated by 520 and 530, signals 515 and 516 are down-converted to baseband and filtered, so that each signal may be processed on separate receiver input channels (e.g., filters, ADCs, and digital processing circuits in baseband processor 550). While the above examples illustrate transmission and reception using direct up and down conversion to and from RF center frequencies, it is to be understood that in other implementations the signals could be up/down-converted to intermediate frequencies in intermediate steps between baseband processing. The filtered signals 522 and 521 may be found at locations 508 and 509, and are illustrated in graphs 520 and 530. Analog-to-digital converter 560 is coupled to the output of filter 506 to receive the first down-converted signal 522 and convert signal 522 to back into a digital signal. Similarly, analog-to-digital converter 570 is coupled to the output of filter 507 to receive the second down-converted signal 521 and convert signal 521 to back into a digital signal. The digital signals may be processed to retrieve the original data. For example, the digital signals may be serialized back into a single data stream (e.g., using a MUX), processed independently according to different protocol requirements, or, if the data is the same data, combined digitally to improve the reliability of the transmission, for example.

[0051] Fig. 6 illustrates a wireless communication method 600 according to one embodiment of the present invention. At 601, a first digital signal, including a first data, is received, and a second digital signal, including a second data, is received. The data may be received from a baseband processor in a wireless transmitter, for example, for up-conversion and transmission as an electromagnetic signal. In one embodiment, the first data may be unrelated to the second data. However, in other embodiments, the first data may correspond to the second data. For example, the same data may be encoded and divided into two streams and up-converted to two different RF center frequencies and then transmitted as described above. At 602, the first digital signal is converted to a first analog signal using a first digital-to-analog converter, for example. The first analog signal carries the first data across a first frequency range. Also at 602, the second digital signal is converted to a second analog signal

using a second digital-to-analog converter, for example. The second analog signal carries the second data across a second frequency range. In one embodiment described in more detail below, the first and second analog signals are carrying different coded versions of the same digital data. At 603, the first analog signal is up-converted to a first RF center frequency. The up-converted first analog signal comprises a first up-converted frequency range from the first RF center frequency minus one-half the first frequency range to the first RF center frequency plus one-half the first frequency range. Also at 603, the second analog signal is up-converted to a second RF center frequency. The up-converted second analog signal comprises a second up-converted frequency range from the second RF center frequency minus one-half the second frequency range to the second RF center frequency plus one-half the second frequency range. The frequency difference between the first RF center frequency and the second RF center frequency may be greater than the sum one-half the first frequency range and one half the second frequency range. Accordingly, the frequency content of the up-converted signals will not overlap. At 604, the first up-converted analog signal and the second up-converted analog signal are combined into a combined up-converted signal. At 605, the combined up-converted signal is amplified (e.g., in a power amplifier) and results in an amplified combined up-converted signal. In one embodiment, the bandwidth of the power amplifier is greater than the difference, in frequency, between a lowest frequency in the first up-converted frequency range and a highest frequency in the second up-converted frequency range. At, 606 the amplified signal is transmitted, for example, by coupling the output of the power amplifier to an antenna.

[0052] Fig. 7A and 7B illustrate a wireless communication method 700 according to another embodiment of the present invention. At 701, a first digital signal, including a first data, is received and a second digital signal, including a second data, is received. In this example, the first and second data include different coded versions of the same data. For example, as mentioned above, one embodiment of the invention may include transmitting the same data at two different RF frequencies and receiving and combining the data. This may be done so that the transmission of the data is more reliable (e.g., fewer errors). Also, using this method may allow for greater transmission range. This method may make the signal data more impervious to noise and interference. At 702, the first digital signal is converted to first analog signal using a first digital-to-analog converter. The first analog signal carries the first data across a first frequency range. Also at 702, the second digital signal is converted to a second analog signal using a second digital-to-analog converter. The second analog signal

carries the second data across a second frequency range. At 703, the first analog signal is up-converted to a first RF center frequency. The up-converted first analog signal comprises a first up-converted frequency range from the first RF center frequency minus one-half the first frequency range to the first RF center frequency plus one-half the first frequency range. Also at 703, the second analog signal is up-converted to a second RF center frequency. The up-converted second analog signal comprises a second up-converted frequency range from the second RF center frequency minus one-half the second frequency range to the second RF center frequency plus one-half the second frequency range. The frequency difference between the first RF center frequency and the second RF center frequency is greater than the sum one-half the first frequency range and one half the second frequency range. At 704, the first up-converted analog signal and the second up-converted analog signal are combined into a combined up-converted signal. At 705, the combined up-converted signal is amplified in a power amplifier and results in an amplified combined up-converted signal. The bandwidth of the power amplifier is greater than the distance between a lowest frequency in the first up-converted frequency range and a highest frequency in the second up-converted frequency range. At, 706 the amplified combined up-converted signal is transmitted on a first antenna.

[0053] At 707, the transmitted signal is received on a second antenna of a receiver. At the receiver the two coded versions of the same data are processed and decoded properly to recover the original data. At 708, the received signal is amplified in a low noise amplifier and results in an amplified received up-converted signal. The bandwidth of the low noise amplifier is greater than the distance between a lowest frequency in the first up-converted frequency range and a highest frequency in the second up-converted frequency range. At 709, the amplified received up-converted signal is down-converted using a first down-converter and a signal corresponding to the first RF center frequency to produce a fourth analog signal corresponding to the first analog signal. Also at 709, the amplified received up-converted signal is down-converted using a second down-converter and a signal corresponding to the second RF center frequency to produce a fifth analog signal corresponding to the second analog signal. The received down-converted analog signals may be processed in separate analog receiver channels and combined digitally, as described above, or the fourth and the fifth analog signals may be combined into a sixth signal, as illustrated at 710. At 711, the combined signal is filtered. It is to be understood that filtering may occur before or after the received signals are combined. At 712, the combined signal is converted

into a digital signal using an analog-to-digital converter. The resulting digital signal maybe processed digitally by a baseband processor and output first data.

[0054] Fig. 8 illustrates a wireless communication transmitter according to one embodiment of the present invention. This example provides a transmitter for sending the same data across a communication channel at two different RF carrier frequencies to improve reliability and/or increase the range of the system. A DAC 810 receives the data to be transmitted and converts the digital data into an analog signal. The output of the DAC 810 is coupled to the input of a filter 811 to filter unwanted frequency content, such as aliasing, for example. The output of filter 811 is coupled to the input of a first up-converter 812. Additionally, the output of filter 811 is coupled to the input of a second up-converter 813. Up-converter 812 includes a second input coupled to an output of a synthesizer 814, which may be used to up-convert the analog signal to a RF center frequency f1. Similarly, up-converter 813 includes a second input coupled to another output of a synthesizer 814 (or to a different synthesizer), which may be used to up-convert the analog signal to a RF center frequency f2. The outputs of up-converters 812 and 813 are coupled together and to the input of power amplifier 815. Accordingly, the up-converted signals are combined at the power amplifier input. Power amplifier 815 has a bandwidth sufficient to amplify all of the frequency content in the combined signal. The output of power amplifier 815 is coupled to antenna 850 to transmit the digital data simultaneously as an electromagnetic signal using two different RF carrier frequencies.

[0055] Fig. 9 illustrates a wireless communication receiver according to one embodiment of the present invention. System 900 includes an antenna 901, low noise amplifier 902 (LNA), a down-converter 404, a down-converter 905, a synthesizer 903, a filter 906, and an analog-to-digital converter (ADC) 907. Frequency content 910 may be transmitted as an electromagnetic signal described above and received by antenna 901. The electromagnetic signal received by antenna 901 may include an up-converted analog signal from transmitter 800, for example, including signals 911 and 912. In this example, the signals 911 and 912 carry the same information (data). For example, signal 911 may be an analog signal up-converted to a first RF frequency, and signal 912 may be the same analog signal up-converted to a second RF frequency. A low noise amplifier 902 has an input coupled to antenna 901 to receive the up-converted RF signals, and outputs an amplified up-converted signal on line 909. In a differential system line, 909 may be two signal lines (i.e., a differential signal). A first down-converter 904 includes a first input that is coupled to the output of LNA 902 to

receive the amplified RF signal. The first down-converter includes a second input coupled to receive a signal corresponding to the first RF frequency (i.e., a frequency such as f1) from synthesizer 903. The first down-converter outputs a baseband analog signal. The analog signal corresponds to the analog signal carrying information across frequency range 915, which was provided to an up-converter in the transmitter that generated signal 910. A second down-converter 905 includes an input that is coupled to the output of LNA 902 to receive the amplified up-converted signal. The second down-converter 905 includes an input that is coupled to a signal corresponding to the second RF frequency (f2) from synthesizer 903. The second down-converter also outputs a baseband analog signal. The analog signal from down-converter 905 corresponds to an analog signal carrying information across frequency range 916, which was provided to an up-converter in the transmitter that generated signal 910. As mentioned above, frequency range 915 and 916 may carry the same information and may result in the same analog signal when down-converted. A filter 906 is coupled to the output of down-converter 904 to receive the down-converted version of signal 911. Filter 906 may also be coupled to the output of down-converter 905 to receive the down-converted version of signal 912. The filter eliminates frequency content outside the frequency band of interest. As illustrated by 520, the analog signals 911 and 912 are down-converted to the same frequency. In this example, the signals are combined and then filtered. However, it is to be understood that the signals could be filter separately and then combined. In either case, the signals are combined to improve the quality of the signal being received. In this example, the signals are down-converted directly to baseband and combined. However, in other implementations the signals could be down-converted to intermediate frequencies, combined, and then down-converted to baseband. The combined filtered signal may be found at location 908 and is illustrated in graph 920. An analog-to-digital converter 907 is coupled to receive the combined signal, where the combined signal is converted to back into a digital signal. The digital signal may be processed to retrieve the original data. If the second data is the same as the first data, the system could be used to increase the reliability of the communication channel or increase the range of transmission.

[0056] Fig. 10 illustrates a wireless communication transmitter according to one embodiment of the present invention. Communication transmitter 1000 includes digital-to-analog converter (DAC) 1001, DAC 1002, filter 1003, filter 1004, up-converter 1005 (such as a mixer), up-converter 1006, synthesizer 1007, power amplifier 1008, antenna 1009, encoding block 1010, and encoding block 1011. Digital-to-analog converter (DAC) 1001,

DAC 1002, filter 1003, filter 1004, up-converter 1005, up-converter 1006, synthesizer 1007, power amplifier 1008, and antenna 1009 function in a similar manner as corresponding components digital-to-analog converter (DAC) 201, DAC 202, filter 203, filter 204, up-converter 205, up-converter 206, synthesizer 207, power amplifier 208, and antenna 209 function in circuit 200 described above.

[0057] Encoding block 1010 and encoding block 1011 perform an orthogonal frequency domain multiplexing (OFDM) modulation function which utilizes an Almouti code. This example utilizes Almouti code, but other orthogonal codes may be utilized. This encoding may be done in software, firmware, or both. Elements 1013, 1014, 1015, and 1016 make up one coding matrix.

$$M1 = \left[\frac{S_1(1), S_2(1)}{-S_2^*(1), S_1^*(1)} \right]$$

Four OFDM symbols comprised of N elements each are transmitted in a first time slot and a second time slot. The first time slot includes OFDM symbol 1017 and OFDM symbol 1018. The second time slot includes OFDM symbol 1023 and OFDM symbol 1024. OFDM symbol 1017 and 1023 are processed through an inverse fast fourier transform (IFFT) 1019 and converted to a serial bit stream with a cyclic prefix 1021. OFDM symbol 1018 and 1024 are processed through an inverse fast fourier transform (IFFT) 1020 and converted to a serial bit stream with a cyclic prefix 1022. The resulting bit streams are converted, up-converted, combined, amplified, and transmitted as described above. The symbols are transmitted over a single antenna. The frequencies f_1 and f_2 may hop to different frequencies as described above.

[0058] Fig. 11 illustrates a wireless communication receiver according to one embodiment of the present invention. Communication receiver 1100 includes antenna 1101, low noise amplifier 1102 (LNA), down-converter 1104, down-converter 1105, synthesizer 1103, filter 1106, amplifier 1108, analog-to-digital converter (ADC) 1107, and decoding block 1109. Antenna 1101, low noise amplifier 1102 (LNA), down-converter 1104, down-converter 1105, synthesizer 1103, filter 1106, and analog-to-digital converter (ADC) 1107 function in a similar manner as corresponding components antenna 901, low noise amplifier 902 (LNA), down-converter 904, down-converter 905, synthesizer 903, filter 906, and analog-to-digital converter (ADC) 907 function in circuit 900 described above. Amplifier 1108 may be an automatic gain control circuit or "AGC" added to provide additional gain prior to conversion

into digital by ADC 1107. The transmitted signal is received on a single antenna and after down-conversion the signals are recombined and share the same signal path through the filter 1106, amplifier 1108, and a single ADC 1107.

[0059] Decoding block 1109 produces estimates of the information contained in the transmission. The data is converted from serial to parallel data 1110 and then the data is organized into blocks comprising "N" elements. The data is processed by a fast fourier transform (FFT) before estimating the data. This example utilizes Almouti code, but other orthogonal codes may be utilized. The purpose of the decoding is to recover S_1 and S_2 from element 1114 and element 1115. Other elements are estimated in a similar fashion. $[h_1,h_2,\ldots,h_N]$ represents the channel response over band frequency f_1. $[g_1,g_2,\ldots,g_N]$ represents the channel response over band frequency f_2. Let Y_1 be equal to element 1114, and let Y_2 be equal to element 1115.

$$Y_1 = h_1 S_1(1) + g_1 S_2(1)$$
$$Y_2 = h_1 S_2^*(1) + g_1 S_1^*$$
$$\textit{Estimates}$$
$$S_1 \cong \frac{h_1^* Y_1(1) + g_1 Y_2^*}{|h_1|^2 + |g_1|^2}$$
$$S_2 \cong \frac{g_1^* Y_1(1) - h_1 Y_2^*}{|h_1|^2 + |g_1|^2}$$

The other elements may be estimated in a similar fashion.

[0060] The above description illustrates various embodiments of the present invention along with examples of how aspects of the present invention may be implemented. The above examples and embodiments should not be deemed to be the only embodiments, and are presented to illustrate the flexibility and advantages of the present invention as defined by the following claims. For example, while one or more embodiments may have been described as having "an input" or "an output", it is to be understood that this term includes single-ended inputs, differential inputs, or even quadrature inputs. As another example, it is to be understood that the synthesizer used to generate different up/down conversion frequencies may be implemented as a single block or as multiple distinct blocks. Based on the above disclosure and the following claims, other arrangements, embodiments, implementations and equivalents will be evident to those skilled in the art and may be employed without departing from the spirit and scope of the invention as defined by the claims.

WHAT IS CLAIMED IS:

1. A method of transmitting information in a wireless communication channel comprising:

transmitting first information across a first frequency range using a wireless transmitter, the first frequency range having a first center frequency, a first highest frequency, and a first lowest frequency; and

simultaneously transmitting second information across a second frequency range using the same wireless transmitter, the second frequency range having a second center frequency greater than the first center frequency, a second highest frequency, and a second lowest frequency.

2. The method of claim 1 wherein frequency difference between the first center frequency and the second center frequency is greater than the sum of one-half the first frequency range and one-half the second frequency range.

3. The method of claim 1 wherein the first and second information are transmitted using the same power amplifier in said wireless transmitter.

4. The method of claim 3 wherein the bandwidth of said power amplifier is greater than the difference between the first lowest frequency and the second highest frequency.

5. The method of claim 1 further comprising concurrently changing the first center frequency to a third center frequency and the second center frequency to a fourth center frequency, wherein the fourth center frequency is greater than the third center frequency, and wherein the first center frequency changes by at least the first frequency range and the second center frequency changes by at least the second frequency range, and wherein the bandwidth of said power amplifier is greater than the difference between the first lowest frequency and the second highest frequency for the changed first and second center frequencies.

6. The method of claim 1 wherein the first information corresponds to a first wireless protocol and the second information corresponds to a second wireless protocol.

7. The method of claim 1 wherein the first information and the second information are the same data transmitted across two different frequencies.

8. The method of claim 1 wherein the first information and the second information are from the same data stream.

9. The method of claim 1 wherein first information and second information comprise a plurality of OFDM symbols, wherein a first symbol is transmitted during a first time slot across the first frequency range and a second symbol is transmitted during the first time slot across the second frequency range, and wherein a third symbol is transmitted during a second time slot across the first frequency range and a fourth symbol is transmitted during the second time slot across a second frequency range.

10. A method of transmitting information in a wireless communication channel comprising:

receiving a first digital signal comprising first data to be transmitted;

receiving a second digital signal comprising second data to be transmitted;

converting the first digital signal into a first analog signal using a first digital-to-analog converter, the first analog signal carrying the first data across a first frequency range;

converting the second digital signal into a second analog signal using a second digital-to-analog converter, the second analog signal carrying the second data across a second frequency range;

up-converting the first analog signal to a first RF center frequency to produce a first up-converted analog signal, wherein the first up-converted analog signal comprises a first up-converted frequency range from the first RF center frequency minus one-half the first frequency range to the first RF center frequency plus one-half the first frequency range;

up-converting the second analog signal to a second RF center frequency greater than the first center RF frequency to produce a second up-converted analog signal, wherein the second up-converted analog signal comprises a second up-converted frequency range from the second RF center frequency minus one-half the second frequency range to the second RF center frequency plus one-half the second frequency range, and wherein a frequency difference between the first RF center frequency and the second RF center

frequency is greater than the sum of one-half the first frequency range and one-half the second frequency range;

combining the first up-converted analog signal and the second up-converted analog signal to produce a combined up-converted signal;

amplifying the combined up-converted signal in a power amplifier resulting in an amplified combined up-converted signal; and

transmitting the amplified combined up-converted signal on a first antenna,

wherein the bandwidth of said power amplifier is greater than the difference between a lowest frequency in the first up-converted frequency range and a highest frequency in the second up-converted frequency range.

11. The method of claim 10 further comprising changing the first and second RF center frequencies, and in accordance therewith, up-converting the first analog signals to the changed first and second RF center frequencies, wherein the first RF center frequency changes by at least the first frequency range and the second RF center frequency changes by at least the second frequency range.

12. The method of claim 11 wherein the first and second RF center frequencies are changed concurrently.

13. The method of claim 10 wherein the first digital signal is encoded using a first wireless protocol and the second digital signal is encoded using a second wireless protocol.

14. The method of claim 10 wherein the second data is the same as the first data, the method further comprising:

receiving the transmitted signal on a second antenna;

amplifying the received signal in a low noise amplifier resulting in an amplified received up-converted signal, wherein the bandwidth of said low noise amplifier is greater than the difference between the lowest frequency in the first up-converted frequency range and the highest frequency in the second up-converted frequency range;

down-converting the amplified received up-converted signal using a first down-converter and a signal corresponding to the first RF center frequency to produce a fourth analog signal corresponding to the first analog signal; and

down-converting the amplified received up-converted analog signal using a second down-converter and a signal corresponding to the second RF center frequency to produce a fifth analog signal corresponding to the second analog signal.

15. The method of claim 12 further comprising:

filtering the fourth analog signal using a third filter and filtering the fifth analog signal using a fourth filter; and

converting the filtered fourth analog signal into a third digital signal using a first analog-to-digital converter and converting the filtered fifth analog signal into a fourth digital signal using a second analog-to-digital converter; and

combining the third and fourth digital signals to receive data corresponding to the first data.

16. The method of claim 12 further comprising:

combining the fourth and fifth analog signals resulting in a sixth signal; and

converting the sixth signal into a third digital signal using a first analog-to-digital converter, and in accordance therewith, receiving data corresponding to the first data.

17. A wireless communication system comprising:

a baseband digital system for providing a first digital signal comprising a first data to be transmitted and a second digital signal comprising a second data to be transmitted;

a first digital-to-analog converter for receiving the first digital signal and converting the first digital signal into a first analog signal, the first analog signal carrying the first data across a first frequency range;

a second digital-to-analog converter for receiving the second digital signal and converting the second digital signal into a second analog signal, the second analog signal carrying the second data across a second frequency range;

a first up-converter circuit having a first input coupled to receive the first analog signal and a second input coupled to receive a first modulation signal having a first RF frequency, wherein the first up-converter outputs a first up-converted analog signal comprising a first up-converted frequency range from the first RF frequency minus one-half the first frequency range to the first RF frequency plus one-half the first frequency range;

a second up-converter circuit having a first input coupled to receive the second analog signal and a second input coupled to receive a second modulation signal having a second RF frequency, wherein the second up-converter outputs a second up-converted analog

signal comprising a second up-converted frequency range from the second RF frequency minus one-half the second frequency range to the second RF frequency plus one-half the second frequency range, and wherein frequency difference between the first RF frequency and the second RF frequency is greater than the sum of one-half the first frequency range and one-half the second frequency range; and

a power amplifier coupled to receive the first and second up-converted analog signals, wherein the bandwidth of the power amplifier is greater than the difference between a lowest frequency in the first up-converted frequency range and a highest frequency in the second up-converted frequency range.

18. The communication system of claim 17 wherein the first RF frequency and the second RF frequency change within the bandwidth of the power amplifier.

19. The communication system of claim 18 wherein the first RF frequency and the second RF frequency change concurrently.

20. The communication system of claim 18 wherein the first RF frequency and the second RF frequency change periodically.

21. The communication system of claim 17 wherein the first data of the first digital signal is encoded using a first wireless protocol and the first data of the second digital signal is encoded using a second wireless protocol.

22. The communication system of claim 17 wherein the second data corresponds to the first data and wherein the power amplifier outputs a third up-converted signal comprising the up-converted first analog signal and the up-converted second analog signal.

23. The communication system of claim 17 wherein first and second data to be transmitted comprise a plurality of OFDM symbols, wherein a first symbol is transmitted during a first time slot across the first up-converted frequency range and a second symbol is transmitted during the first time slot across the second up-converted frequency range, and wherein a third symbol is transmitted during a second time slot across the first up-converted frequency range and a fourth symbol is transmitted during the second time slot across a second up-converted frequency range.

24. An electronic circuit comprising:

a first down-converter circuit having a first input coupled to receive a first up-converted signal, a second input coupled to receive a first demodulation signal having a first RF frequency, and an output, wherein the first down-converter circuit outputs a first down-converted signal on the first down-converter output;

a second down-converter circuit having a first input coupled to receive the first up-converted signal, a second input coupled to receive a second demodulation signal having a second RF frequency different than the first RF frequency, and an output, wherein the second down-converter outputs a second down-converted signal on the second down-converter output, wherein the first up-converted signal comprises a first signal modulated at the first RF frequency and a second signal modulated at the second RF frequency; and

a filter having an input coupled to the output of the first down-converter and the output of the second down-converter, and in accordance therewith, the filter receives the first and second down-converted signals.

25. The communication system of claim 24 wherein first signal has a first frequency range and the second signal has a second frequency range, and wherein the frequency difference between the first RF frequency and the second RF frequency is greater than the sum of one-half the first frequency range and one-half the second frequency range.

Wireless Communication Systems and Methods

ABSTRACT

Embodiments of the present invention transmit signals simultaneously over a communication channel at different RF center frequencies, and may use a single power amplifier and antenna. In one embodiment the present invention includes a method of transmitting information in a wireless communication channel comprising receiving digital signals having data to be transmitted, converting the signals to analog signals, up-converting each analog signal, combining the up-converted signals, amplifying the combined up-converted signal and transmitting the combined up-converted signal. In one embodiment, the same data is sent over a transmission channel at two different frequencies to improve reliability.

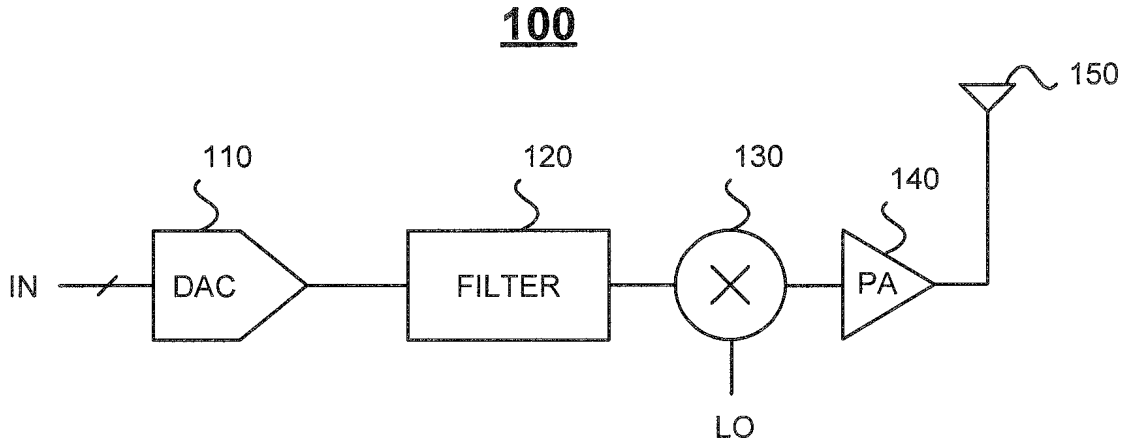

Fig. 1
(prior art)

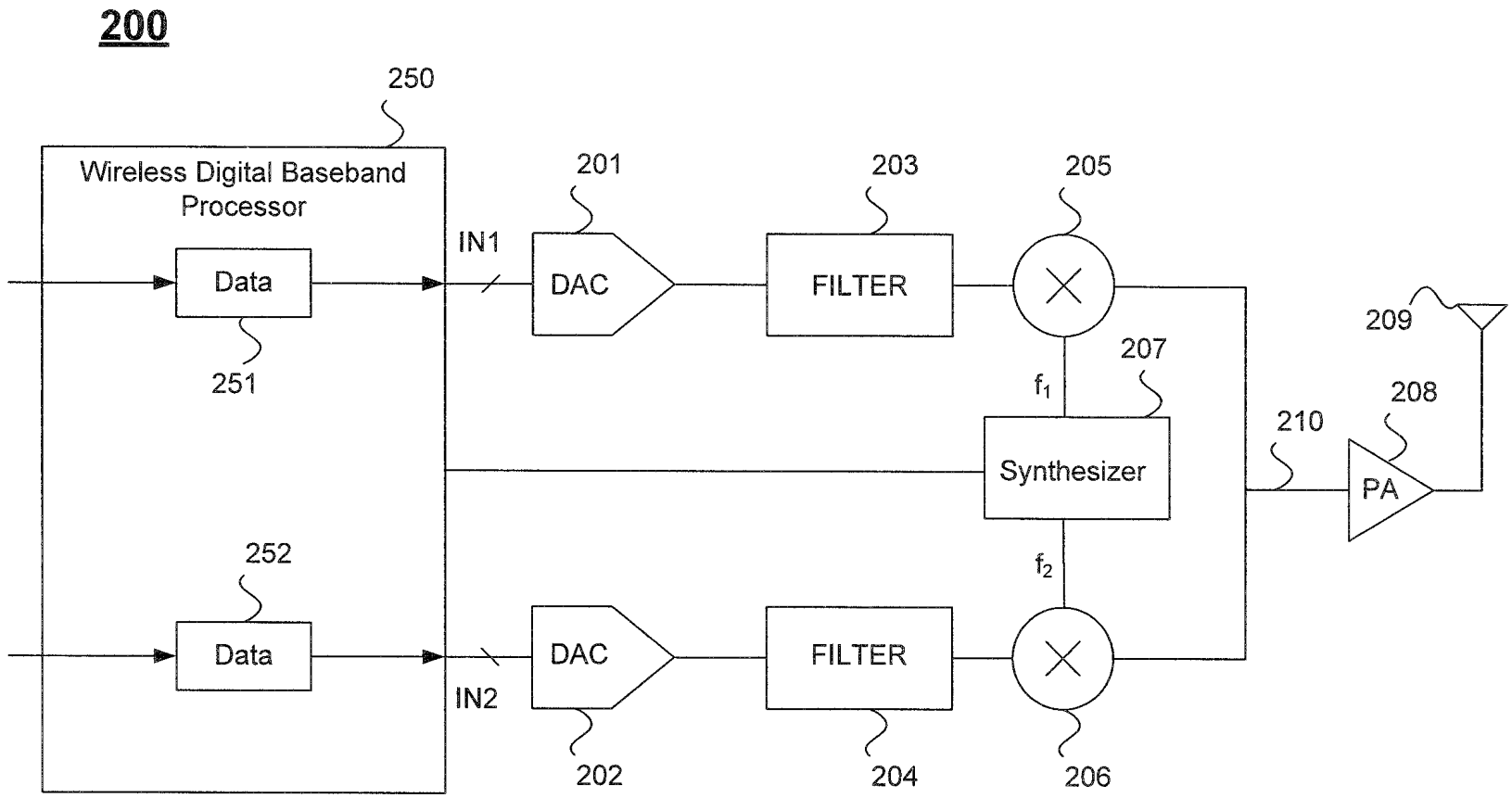
200
250
Wireless Digital Baseband Processor
Data
251
252
Data
IN1
IN2
201
DAC
202
DAC
203
FILTER
204
FILTER
205
206
207
Synthesizer
f1
f2
210
PA
208
209

Fig. 2

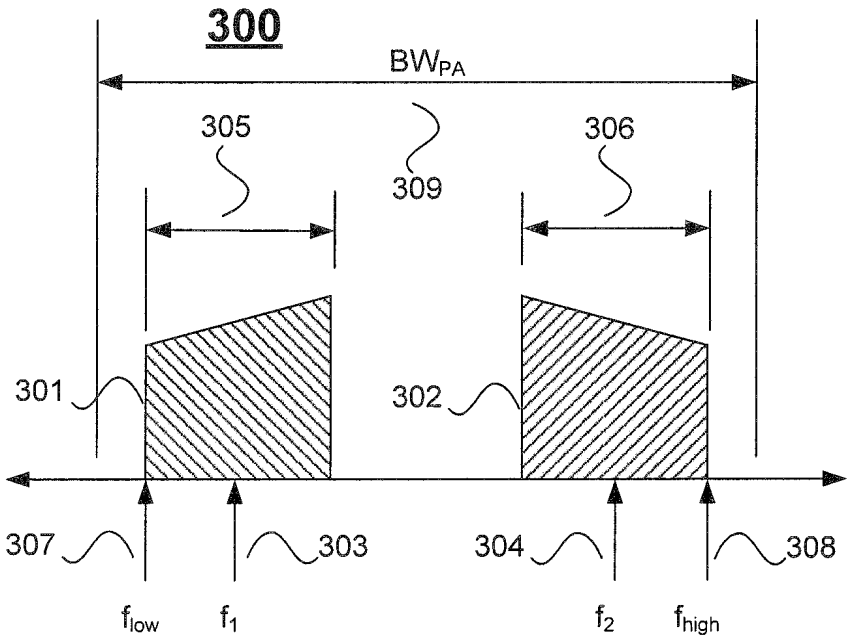

Fig. 3

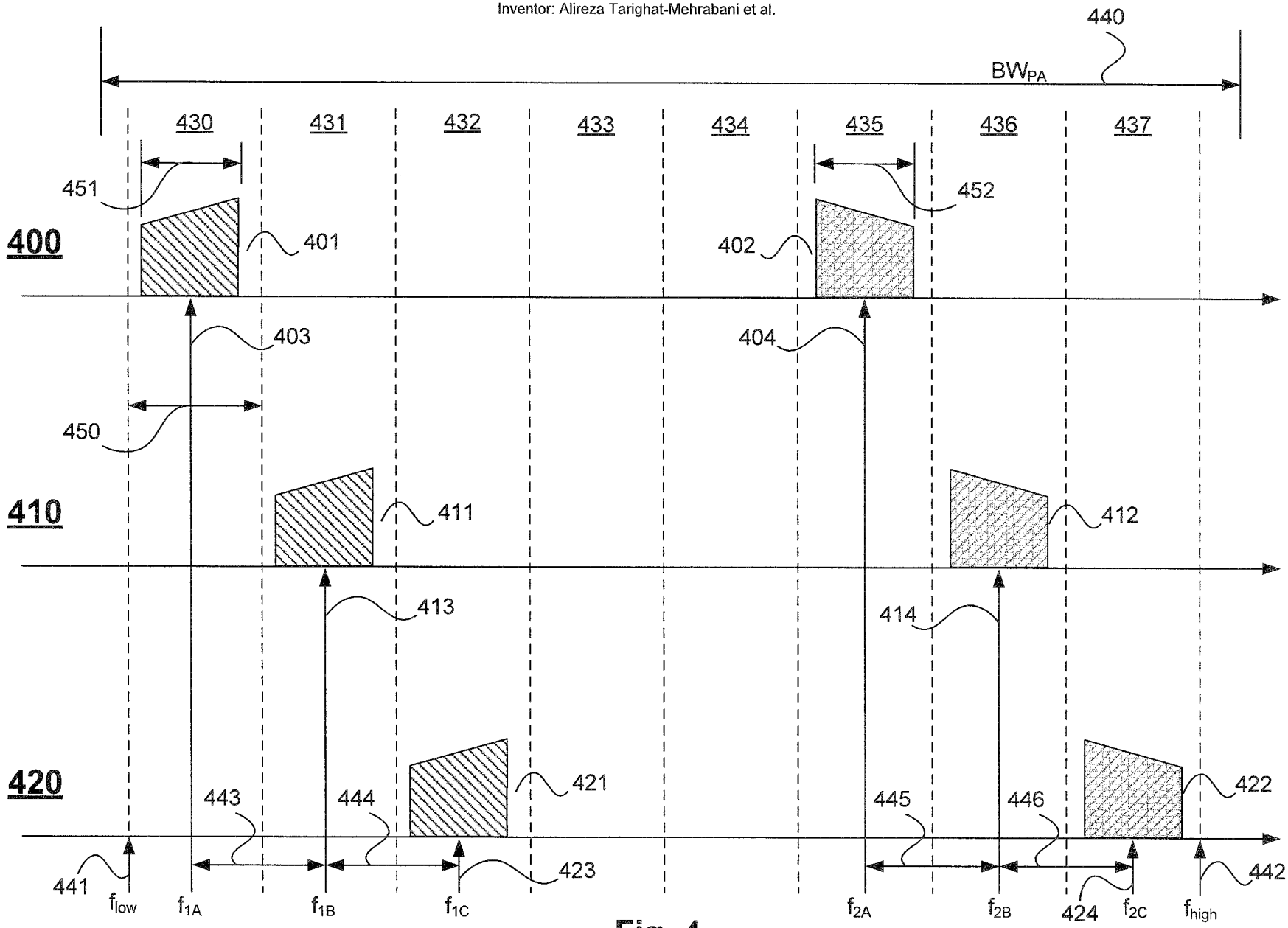
440
BWPA
430
431
432
433
434
435
436
437
451
452
400
401
402
403
404
450
410
411
412
413
414
420
421
422
443
444
445
446
441
423
424
442
flow
f1A
f1B
f1C
f2A
f2B
f2C
fhigh

Fig. 4

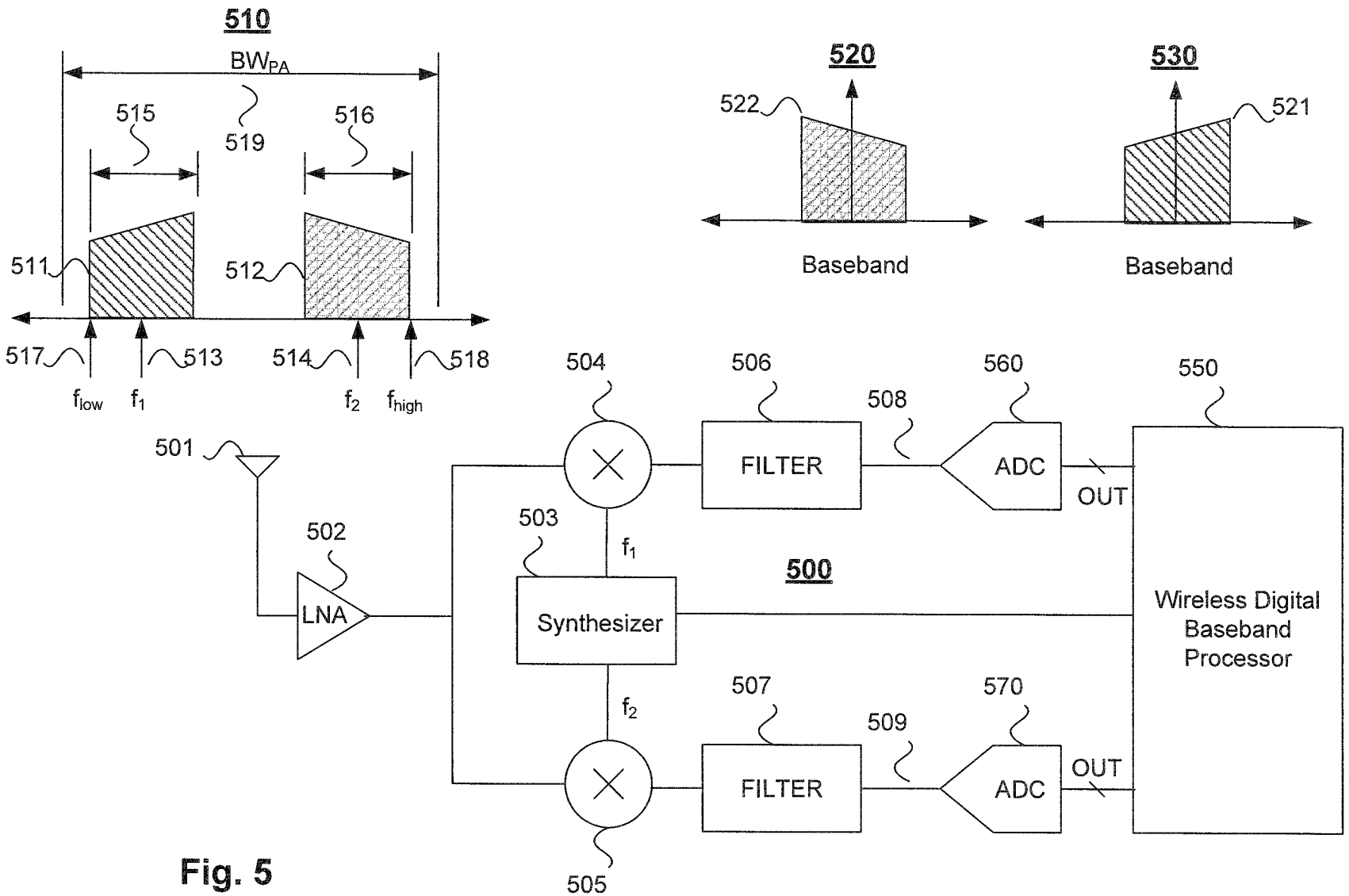
510
BWPA
515
516
519
511
512
517
513
514
518
flow
f1
f2
fhigh
520
522
Baseband
530
521
Baseband
501
502
LNA
504
503
f1
Synthesizer
f2
505
506
FILTER
508
560
ADC
OUT
550
Wireless Digital Baseband Processor
500
507
FILTER
509
570
ADC
OUT

Fig. 5

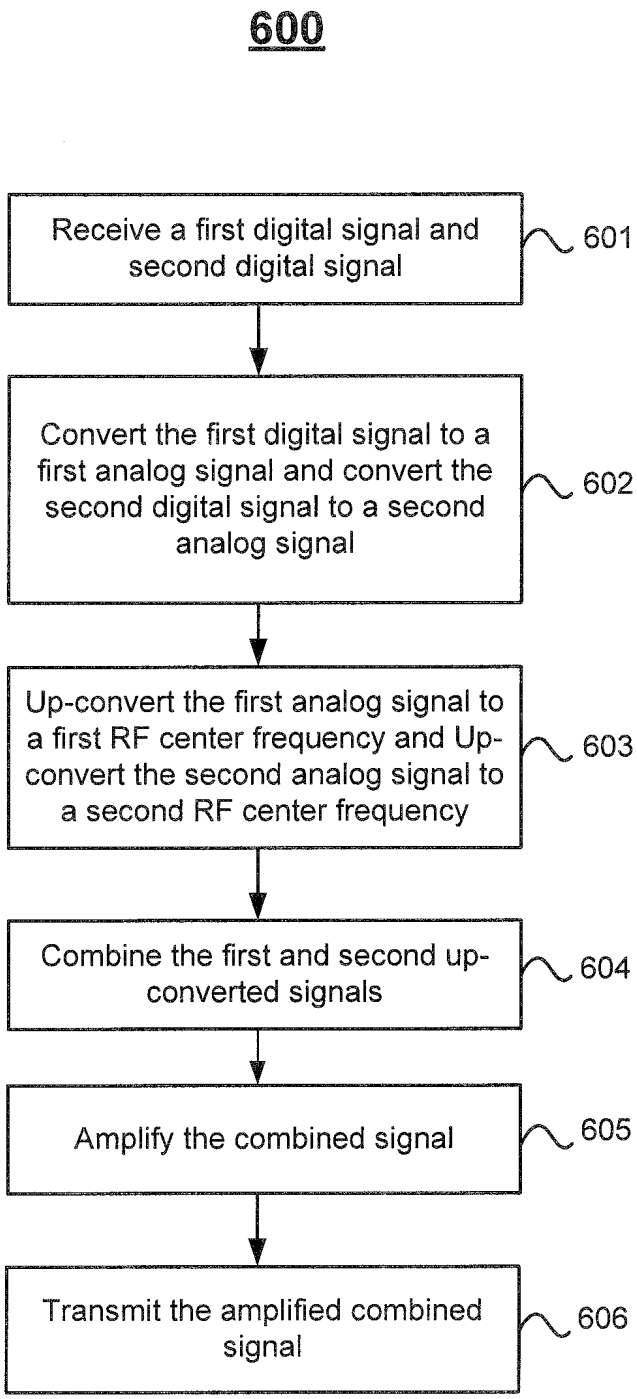
600
Receive a first digital signal and second digital signal
601
Convert the first digital signal to a first analog signal and convert the second digital signal to a second analog signal
602
Up-convert the first analog signal to a first RF center frequency and Up-convert the second analog signal to a second RF center frequency
603
Combine the first and second up-converted signals
604
Amplify the combined signal
605
Transmit the amplified combined signal
606

Fig. 6

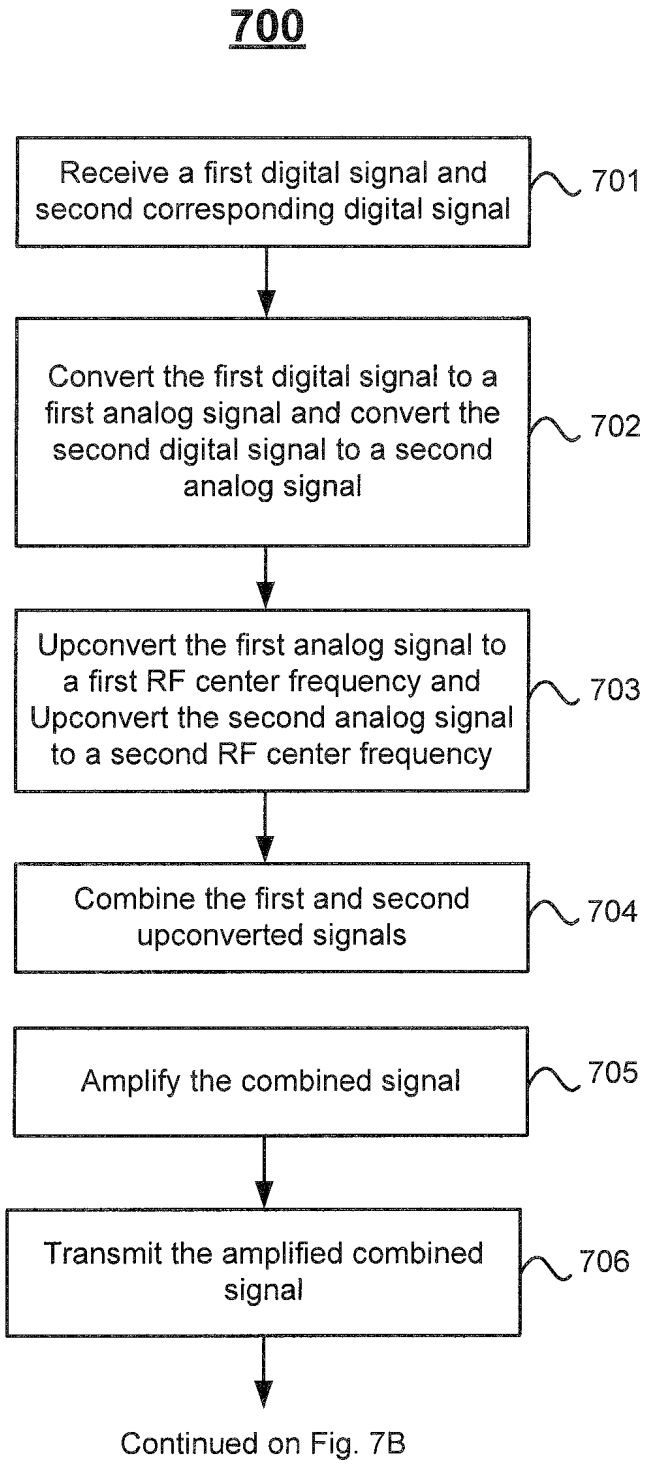
700
Receive a first digital signal and second corresponding digital signal
701
Convert the first digital signal to a first analog signal and convert the second digital signal to a second analog signal
702
Upconvert the first analog signal to a first RF center frequency and Upconvert the second analog signal to a second RF center frequency
703
Combine the first and second upconverted signals
704
Amplify the combined signal
705
Transmit the amplified combined signal
706
Continued on Fig. 7B

Fig. 7A

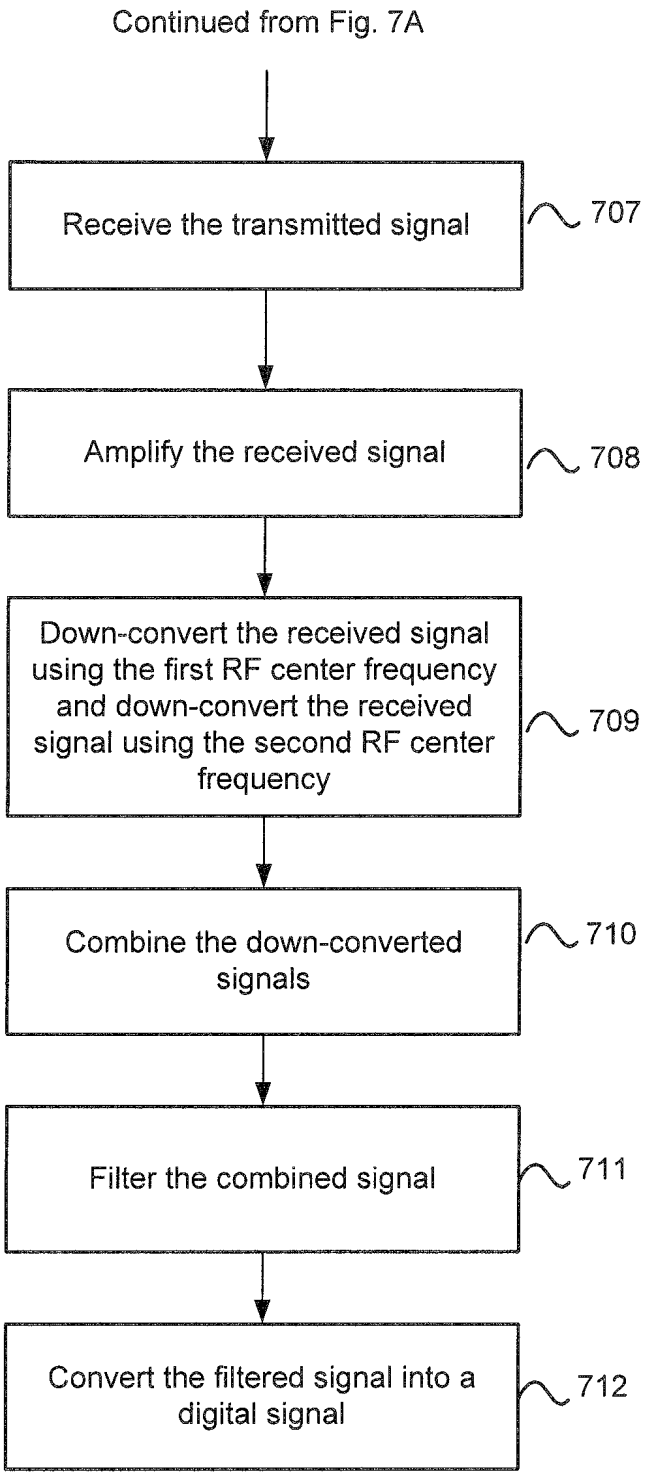
Continued from Fig. 7A
Receive the transmitted signal
707
Amplify the received signal
708
Down-convert the received signal using the first RF center frequency and down-convert the received signal using the second RF center frequency
709
Combine the down-converted signals
710
Filter the combined signal
711
Convert the filtered signal into a digital signal
712

Fig. 7B

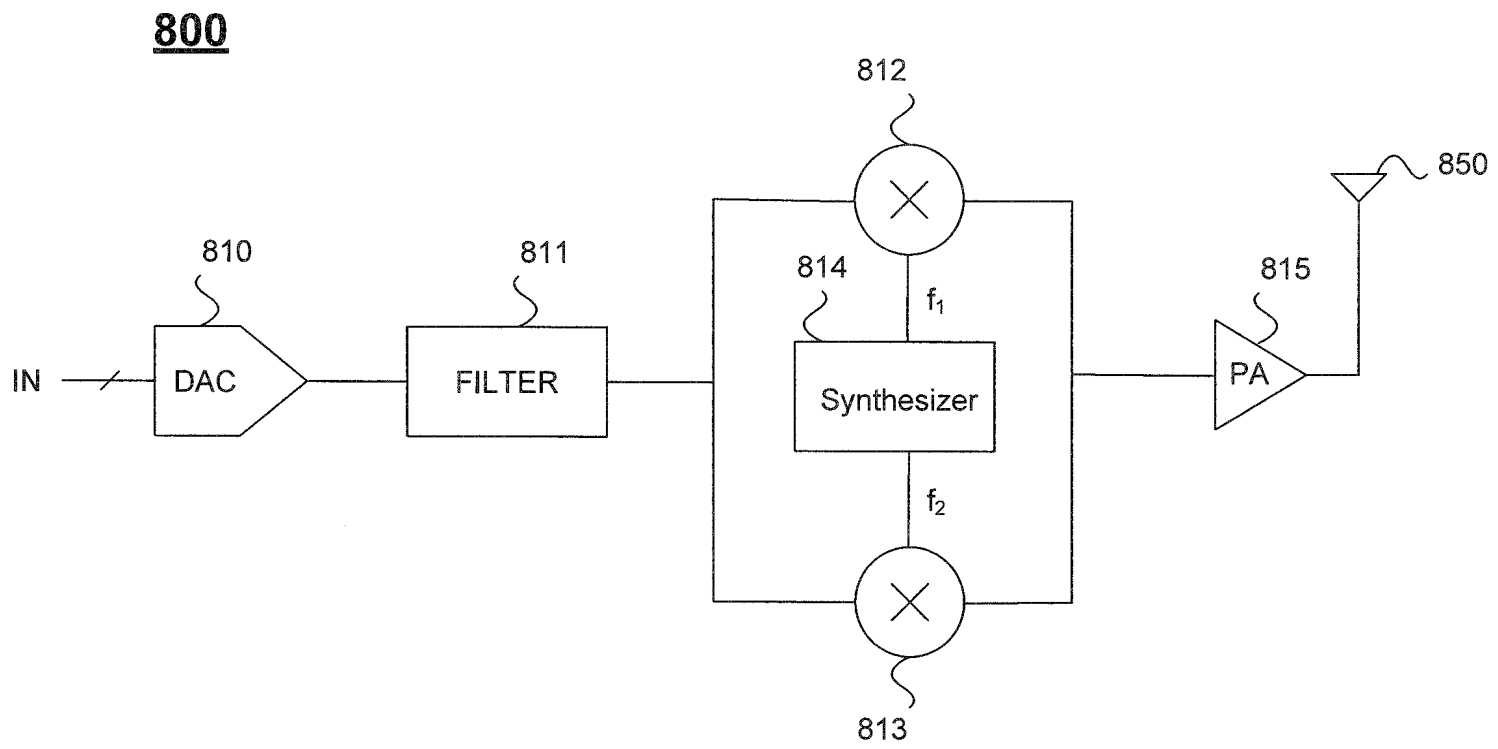
800
812
850
810
811
814
815
IN
DAC
FILTER
Synthesizer
PA
f_1
f_2
813

Fig. 8

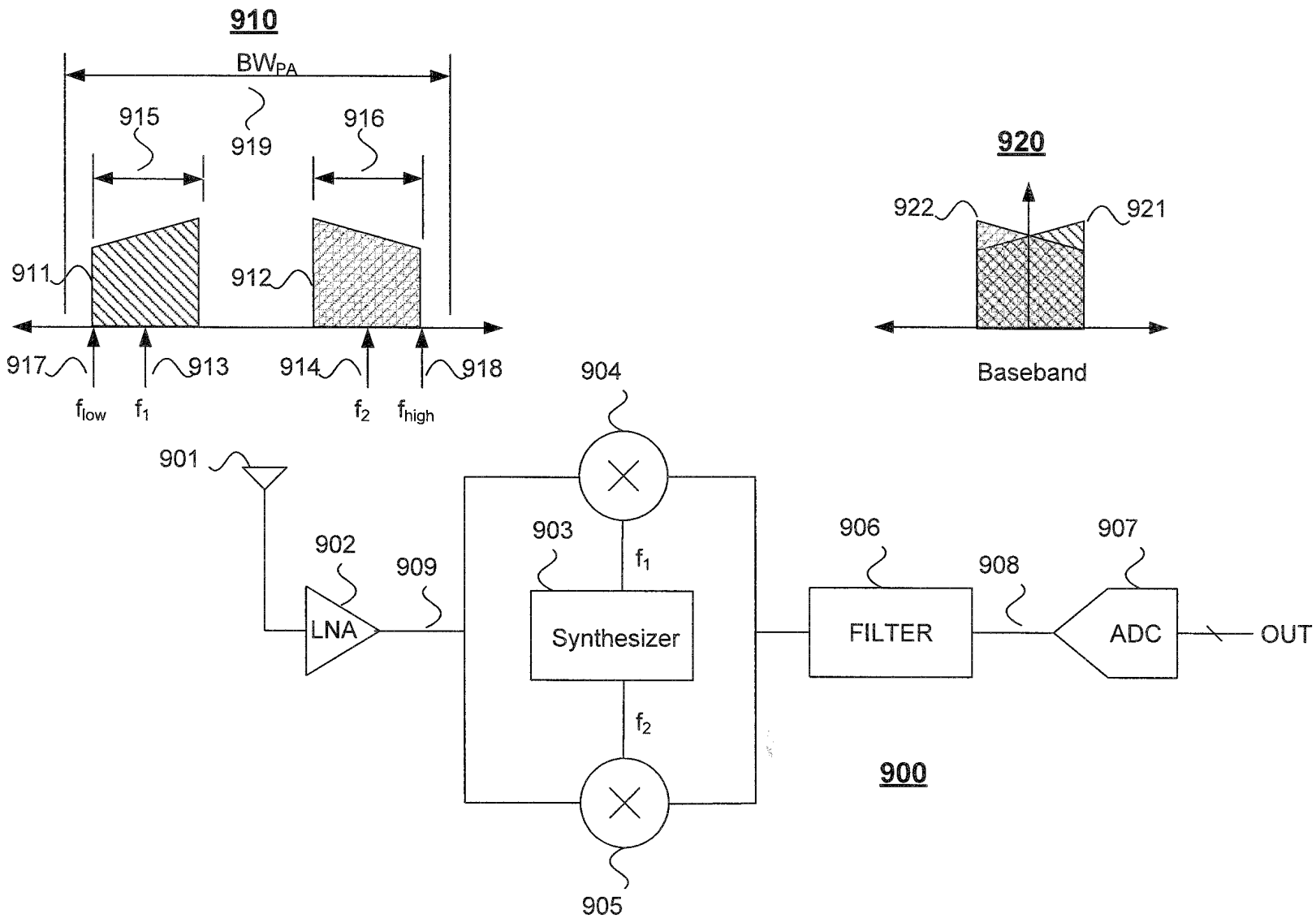
910
BWPA
915
916
919
911
912
917
913
914
918
flow
f1
f2
fhigh
920
922
921
Baseband
901
902
LNA
909
904
903
f1
Synthesizer
f2
905
906
FILTER
908
907
ADC
OUT
900

Fig. 9

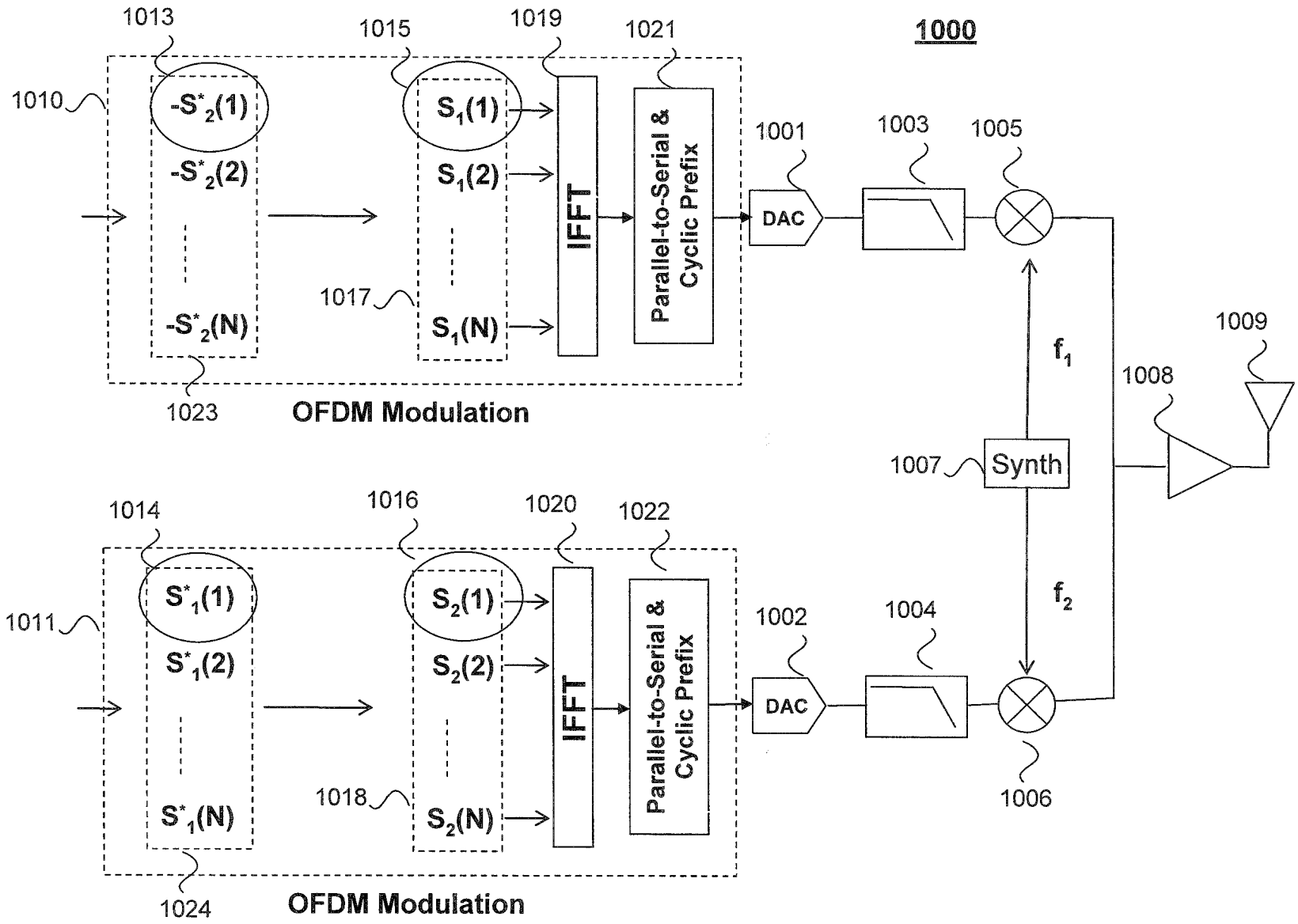
1000
1010
1013
1015
1019
1021
$-S^*_2(1)$
$-S^*_2(2)$
$-S^*_2(N)$
$S_1(1)$
$S_1(2)$
$S_1(N)$
1017
IFFT
Parallel-to-Serial & Cyclic Prefix
1023
OFDM Modulation
1001
DAC
1003
1005
f_1
1009
1008
1007
Synth
f_2
1011
1014
1016
1020
1022
$S^*_1(1)$
$S^*_1(2)$
$S^*_1(N)$
$S_2(1)$
$S_2(2)$
$S_2(N)$
1018
IFFT
Parallel-to-Serial & Cyclic Prefix
1024
OFDM Modulation
1002
DAC
1004
1006

Fig. 10

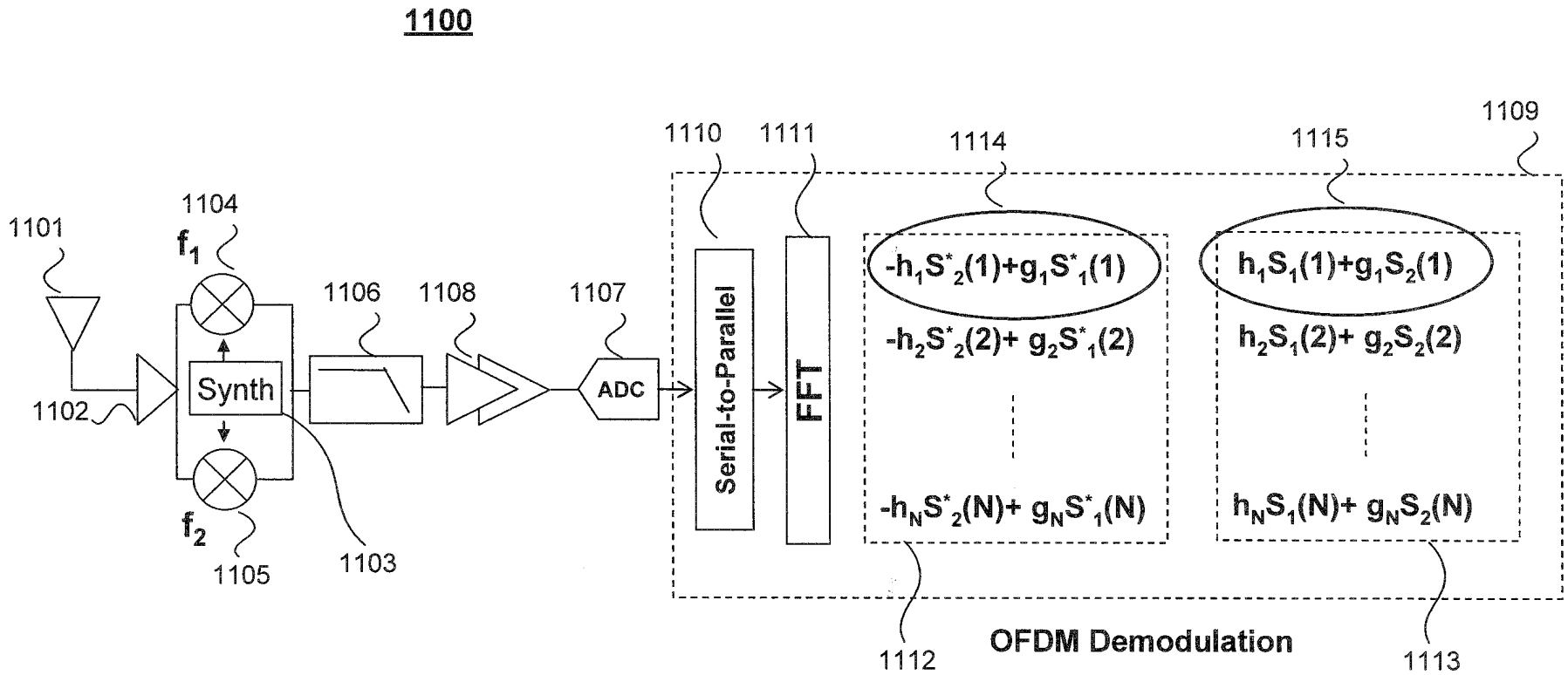
1100
1101
1102
1104
f_1
Synth
f_2
1105
1103
1106
1108
1107
ADC
1110
Serial-to-Parallel
1111
FFT
1114
$-h_1S^*_2(1)+g_1S^*_1(1)$
$-h_2S^*_2(2)+ g_2S^*_1(2)$
$-h_NS^*_2(N)+ g_NS^*_1(N)$
1112
1115
$h_1S_1(1)+g_1S_2(1)$
$h_2S_1(2)+ g_2S_2(2)$
$h_NS_1(N)+ g_NS_2(N)$
1113
1109
OFDM Demodulation

Fig. 11

Electronic Patent Application Fee Transmittal

Application Number:	
Filing Date:	
Title of Invention:	Wireless Communication Systems and Methods
First Named Inventor/Applicant Name:	Alireza Tarighat-Mehrabani
Filer:	Chad Richard Walsh/Julia Moorhead
Attorney Docket Number:	000007-001100US

Filed as Small Entity

Utility Filing Fees

Description	Fee Code	Quantity	Amount	Sub-Total in USD($)
Basic Filing:				
Utility filing Fee (Electronic filing)	4011	1	75	75
Utility Search Fee	2111	1	255	255
Utility Examination Fee	2311	1	105	105
Pages:				
Claims:				
Claims in excess of 20	2202	5	25	125
Independent claims in excess of 3	2201	1	105	105
Miscellaneous-Filing:				

Description	Fee Code	Quantity	Amount	Sub-Total in USD($)
Petition:				
Patent-Appeals-and-Interference:				
Post-Allowance-and-Post-Issuance:				
Extension-of-Time:				
Miscellaneous:				
			Total in USD ($)	**665**

Electronic Acknowledgement Receipt

EFS ID:	2754504
Application Number:	12018370
International Application Number:	
Confirmation Number:	8018
Title of Invention:	Wireless Communication Systems and Methods
First Named Inventor/Applicant Name:	Alireza Tarighat-Mehrabani
Customer Number:	68155
Filer:	Chad Richard Walsh/Julia Moorhead
Filer Authorized By:	Chad Richard Walsh
Attorney Docket Number:	000007-001100US
Receipt Date:	23-JAN-2008
Filing Date:	
Time Stamp:	13:32:54
Application Type:	Utility under 35 USC 111(a)

Payment information:

Submitted with Payment	yes
Payment Type	Electronic Funds Transfer
Payment was successfully received in RAM	$665
RAM confirmation Number	8046
Deposit Account	
Authorized User	

File Listing:

Document Number	Document Description	File Name	File Size(Bytes) /Message Digest	Multi Part /.zip	Pages (if appl.)

1		Filing_Docs.pdf	2137477 89564ff4d425302a6711c4a3982acf0b85f745a9	yes	10
	Multipart Description/PDF files in .zip description				
	Document Description		**Start**	**End**	
	Transmittal of New Application		1	1	
	Application Data Sheet		2	5	
	Oath or Declaration filed		6	7	
	Power of Attorney		8	8	
	Assignee showing of ownership per 37 CFR 3.73(b).		9	10	
Warnings:					
Information:					
2	Specification	Patent_App.pdf	5124143 dd6418b5d86ad019351b5358ea0f9c518d67b883	no	26
Warnings:					
Information:					
3	Drawings-only black and white line drawings	Patent_Drawings.pdf	908971 dd42181566eb57350e9e45bef89872c90b60e5dd	no	12
Warnings:					
Information:					
4	Fee Worksheet (PTO-06)	fee-info.pdf	8566 6a50cf1890b82f8c41ac32fd64415812f63989b2	no	2
Warnings:					
Information:					
		Total Files Size (in bytes):	8179157		

This Acknowledgement Receipt evidences receipt on the noted date by the USPTO of the indicated documents, characterized by the applicant, and including page counts, where applicable. It serves as evidence of receipt similar to a Post Card, as described in MPEP 503.

New Applications Under 35 U.S.C. 111
If a new application is being filed and the application includes the necessary components for a filing date (see 37 CFR 1.53(b)-(d) and MPEP 506), a Filing Receipt (37 CFR 1.54) will be issued in due course and the date shown on this Acknowledgement Receipt will establish the filing date of the application.

National Stage of an International Application under 35 U.S.C. 371
If a timely submission to enter the national stage of an international application is compliant with the conditions of 35 U.S.C. 371 and other applicable requirements a Form PCT/DO/EO/903 indicating acceptance of the application as a national stage submission under 35 U.S.C. 371 will be issued in addition to the Filing Receipt, in due course.

New International Application Filed with the USPTO as a Receiving Office
If a new international application is being filed and the international application includes the necessary components for an international filing date (see PCT Article 11 and MPEP 1810), a Notification of the International Application Number and of the International Filing Date (Form PCT/RO/105) will be issued in due course, subject to prescriptions concerning national security, and the date shown on this Acknowledgement Receipt will establish the international filing date of the application.

01/23/08

Approved for use through 7/31/2006. OMB 0651-0032
U.S. Patent and Trademark Office; U.S. DEPARTMENT OF COMMERCE

Under the Paperwork Reduction Act of 1995, no persons are required to respond to a collection of information unless it displays a valid OMB control number.

PATENT APPLICATION FEE DETERMINATION RECORD

Substitute for Form PTO-875

Application or Docket Number: 12/018,370

APPLICATION AS FILED – PART I

FOR	(Column 1) NUMBER FILED	(Column 2) NUMBER EXTRA	SMALL ENTITY RATE ($)	SMALL ENTITY FEE ($)	OR	OTHER THAN SMALL ENTITY RATE ($)	OTHER THAN SMALL ENTITY FEE ($)
BASIC FEE (37 CFR 1.16(a), (b), or (c))	N/A	N/A	N/A	75		N/A	
SEARCH FEE (37 CFR 1.16(k), (i), or (m))	N/A	N/A	N/A	255		N/A	
EXAMINATION FEE (37 CFR 1.16(o), (p), or (q))	N/A	N/A	N/A	105		N/A	
TOTAL CLAIMS (37 CFR 1.16(i))	25 minus 20 =	* 5	X 25=	125	OR	X 50=	
INDEPENDENT CLAIMS (37 CFR 1.16(h))	4 minus 3 =	* 1	X 105=	105		X 210=	
APPLICATION SIZE FEE (37 CFR 1.16(s))	If the specification and drawings exceed 100 sheets of paper, the application size fee due is $250 ($125 for small entity) for each additional 50 sheets or fraction thereof. See 35 U.S.C. 41(a)(1)(G) and 37 CFR						
MULTIPLE DEPENDENT CLAIM PRESENT (37 CFR 1.16(j))			N/A			N/A	
			TOTAL	665		TOTAL	

* If the difference in column 1 is less than zero, enter "0" in column 2.

APPLICATION AS AMENDED – PART II

		(Column 1) CLAIMS REMAINING AFTER AMENDMENT		(Column 2) HIGHEST NUMBER PREVIOUSLY PAID FOR	(Column 3) PRESENT EXTRA	SMALL ENTITY RATE ($)	SMALL ENTITY ADDI-TIONAL FEE ($)	OR	OTHER THAN SMALL ENTITY RATE ($)	OTHER THAN SMALL ENTITY ADDI-TIONAL FEE ($)
AMENDMENT A	Total (37 CFR 1.16(i))	*	Minus	**	=	x =		OR	x =	
	Independent (37 CFR 1.16(h))	*	Minus	***	=	x =		OR	x =	
	Application Size Fee (37 CFR 1.16(s))									
	FIRST PRESENTATION OF MULTIPLE DEPENDENT CLAIM (37 CFR 1.16(j))					N/A		OR	N/A	
						TOTAL ADD'T FEE		OR	TOTAL ADD'T FEE	

		(Column 1) CLAIMS REMAINING AFTER AMENDMENT		(Column 2) HIGHEST NUMBER PREVIOUSLY PAID FOR	(Column 3) PRESENT EXTRA	RATE ($)	ADDI-TIONAL FEE ($)	OR	RATE ($)	ADDI-TIONAL FEE ($)
AMENDMENT B	Total (37 CFR 1.16(i))	*	Minus	**	=	x =		OR	x =	
	Independent (37 CFR 1.16(h))	*	Minus	***	=	x =		OR	x =	
	Application Size Fee (37 CFR 1.16(s))									
	FIRST PRESENTATION OF MULTIPLE DEPENDENT CLAIM (37 CFR 1.16(j))					N/A		OR	N/A	
						TOTAL ADD'T FEE		OR	TOTAL ADD'T FEE	

* If the entry in column 1 is less than the entry in column 2, write "0" in column 3.
** If the "Highest Number Previously Paid For" IN THIS SPACE is less than 20, enter "20".
*** If the "Highest Number Previously Paid For" IN THIS SPACE is less than 3, enter "3".
The "Highest Number Previously Paid For" (Total or Independent) is the highest number found in the appropriate box in column 1.

This collection of information is required by 37 CFR 1.16. The information is required to obtain or retain a benefit by the public which is to file (and by the USPTO to process) an application. Confidentiality is governed by 35 U.S.C. 122 and 37 CFR 1.14. This collection is estimated to take 12 minutes to complete, including gathering, preparing, and submitting the completed application form to the USPTO. Time will vary depending upon the individual case. Any comments on the amount of time you require to complete this form and/or suggestions for reducing this burden, should be sent to the Chief Information Officer, U.S. Patent and Trademark Office, U.S. Department of Commerce, P.O. Box 1450, Alexandria, VA 22313-1450. DO NOT SEND FEES OR COMPLETED FORMS TO THIS ADDRESS. **SEND TO: Commissioner for Patents, P.O. Box 1450, Alexandria, VA 22313-1450.**

If you need assistance in completing the form, call 1-800-PTO-9199 and select option 2.