US007136430B2

(12) **United States Patent**
Morris et al.

(10) **Patent No.: US 7,136,430 B2**
(45) **Date of Patent: Nov. 14, 2006**

(54) **DIGITAL RECEIVER AND METHOD**

(75) Inventors: **Bradley John Morris**, Ottawa (CA); **Arthur Thomas Gerald Fuller**, Kanata (CA)

(73) Assignee: **Nortel Networks Limited**, St. Laurent (CA)

(*) Notice: Subject to any disclaimer, the term of this patent is extended or adjusted under 35 U.S.C. 154(b) by 770 days.

(21) Appl. No.: **10/403,633**

(22) Filed: **Mar. 31, 2003**

(65) **Prior Publication Data**

US 2004/0190660 A1 Sep. 30, 2004

(51) **Int. Cl.**
H04L 27/06 (2006.01)

(52) **U.S. Cl.** **375/316**; 375/147

(58) **Field of Classification Search** 375/316, 375/324, 130, 147; 455/102, 110, 112; 341/50, 341/61

See application file for complete search history.

(56) **References Cited**

U.S. PATENT DOCUMENTS

4,593,267 A		6/1986	Kuroda et al.	
4,949,048 A		8/1990	Tokumo et al.	
5,377,224 A	*	12/1994	Hudson	375/136
5,497,152 A		3/1996	Wilson et al.	
5,552,785 A		9/1996	Wilson et al.	
5,881,107 A		3/1999	Termerinac et al.	
5,945,885 A		8/1999	Schwartz et al.	
5,987,071 A		11/1999	Iwamatsu et al.	
6,061,008 A		5/2000	Abbey	
6,133,871 A	*	10/2000	Krasner	342/357.06
6,621,366 B1		9/2003	Gentile	
6,710,650 B1		3/2004	Beaudin et al.	
6,734,725 B1		5/2004	Masuda et al.	
2002/0176522 A1	*	11/2002	Fan	375/340

FOREIGN PATENT DOCUMENTS

EP	1 168 632 A1	1/2002
WO	WO 98/20657	5/1998
WO	WO 00/69085	11/2000
WO	WO 02/056487	7/2002

OTHER PUBLICATIONS

Centuori, A., et al., "A 320-MHz Four-Paths Bandpass Sigma-Delta Modulator," IEEE Instrumentation and Measurement Technology Conference, Anchorage, Alaska, USA, May 2-23, 2002, pp. 497-500.

Aziz, P, et al., "An Overview of Sigma-Delta Converters," How A 1-Bit ADC Achieves More Than 16-Bit Resolution, IEEE Signal Processing Magazine, Jan. 1996, pp. 61-84.

* cited by examiner

Primary Examiner—Khai Tran
(74) *Attorney, Agent, or Firm*—Paul C. Hashim

(57) **ABSTRACT**

A receiver and method is provided for sigma-delta converting an RF signal to a digital signal and downconverting to a digital baseband signal. The RF signal is split into N phases, as can be accomplished using a sample and hold circuit, and each phase is digitized, as can be accomplished using an analog-to-digital (A/D) sigma-delta converter. Polyphase decimation techniques and demodulation are applied to the phased signals to generate a demodulated digital signal. The demodulated digital signal is further downconverted to the appropriate baseband signal.

21 Claims, 5 Drawing Sheets

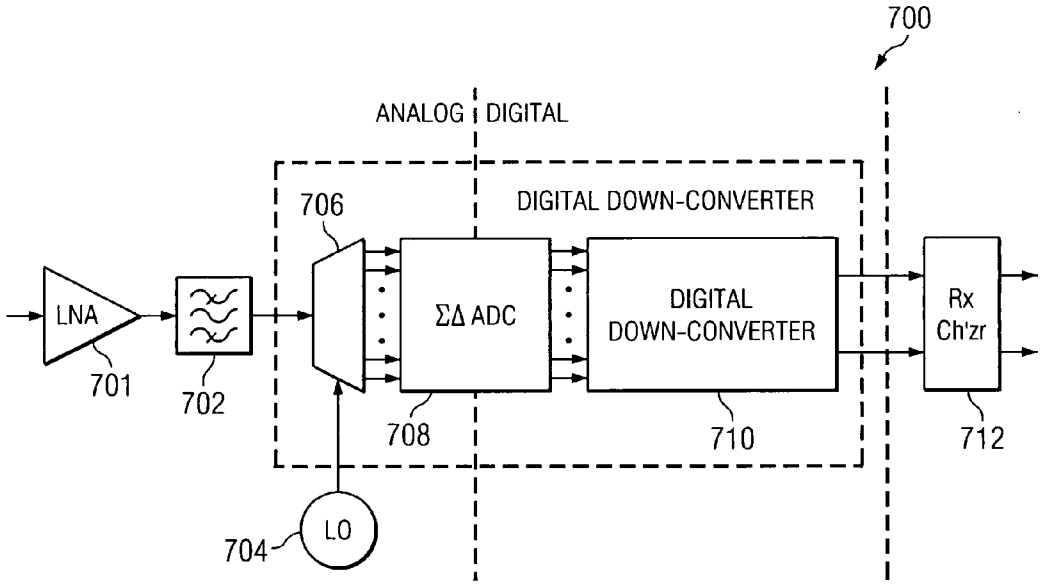

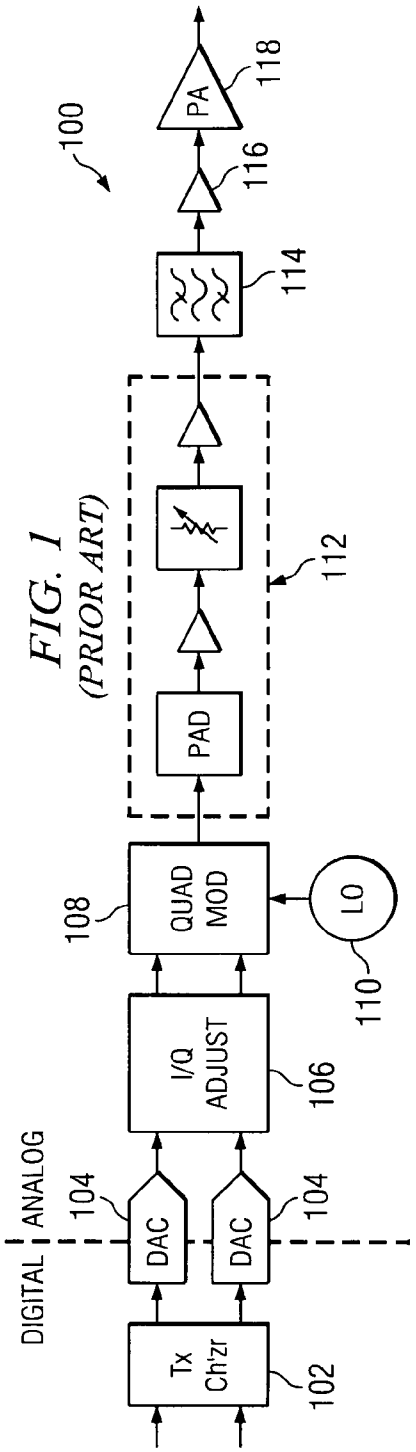

FIG. 1 (PRIOR ART)

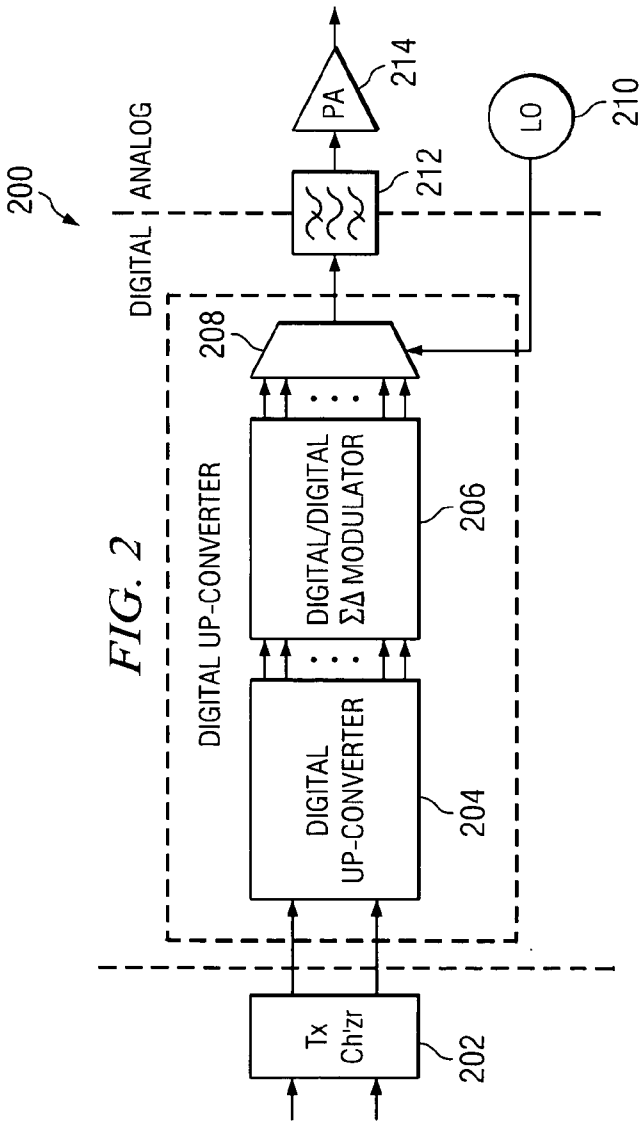

FIG. 2

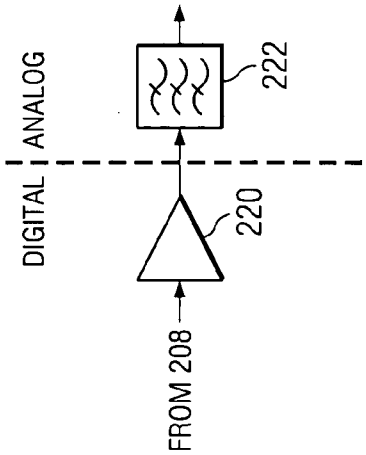

FIG. 2A

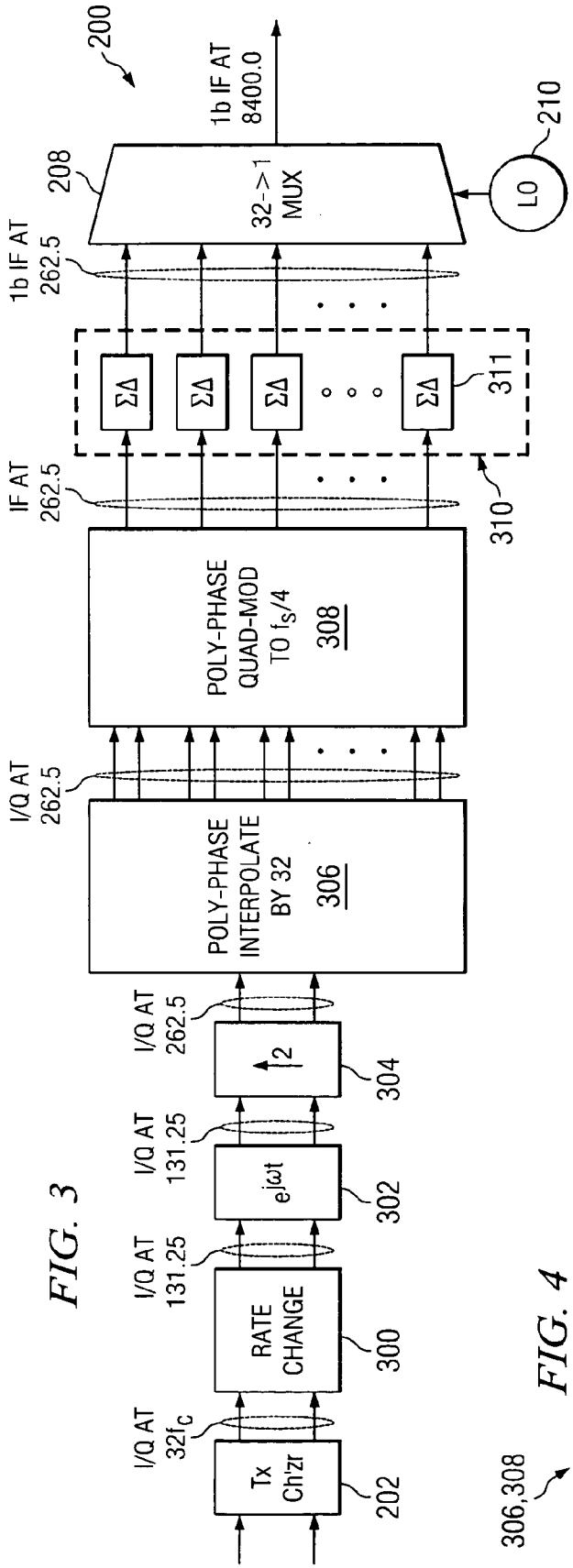

FIG. 3

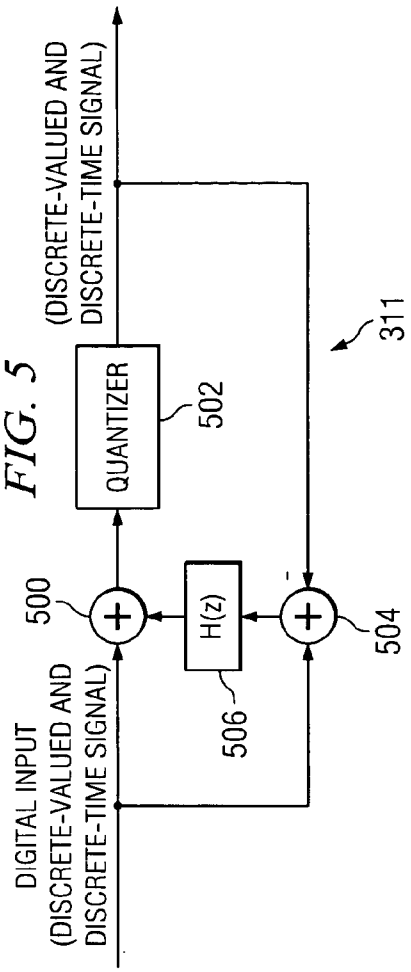

FIG. 5

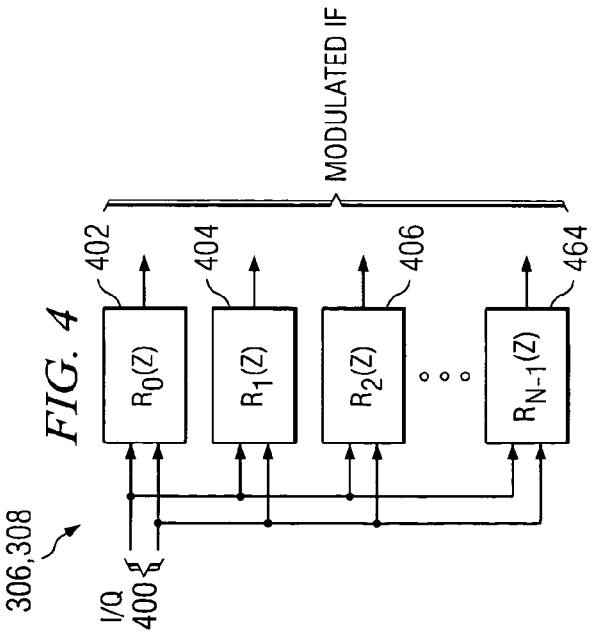

FIG. 4

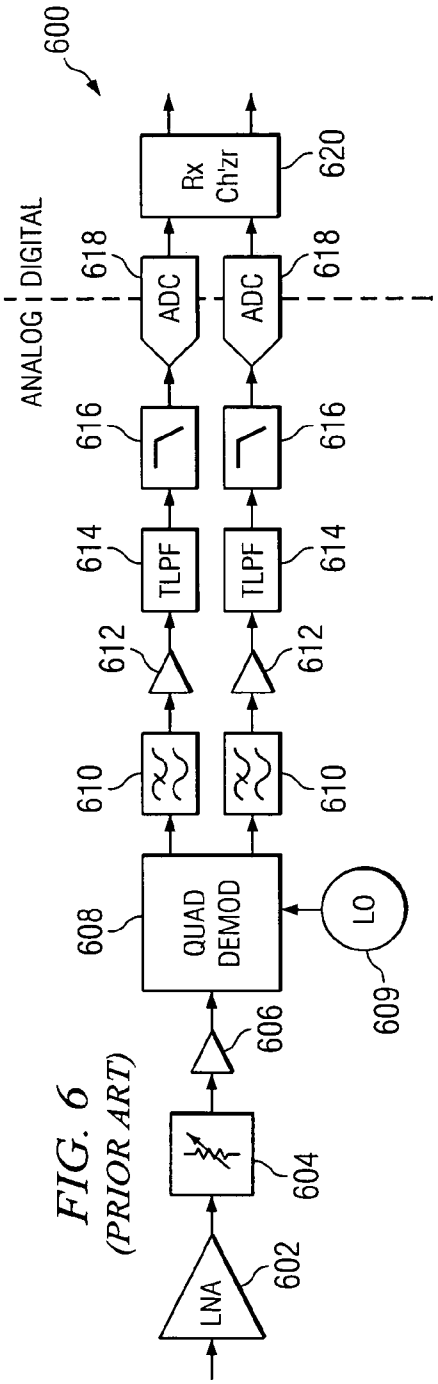

FIG. 6
(PRIOR ART)

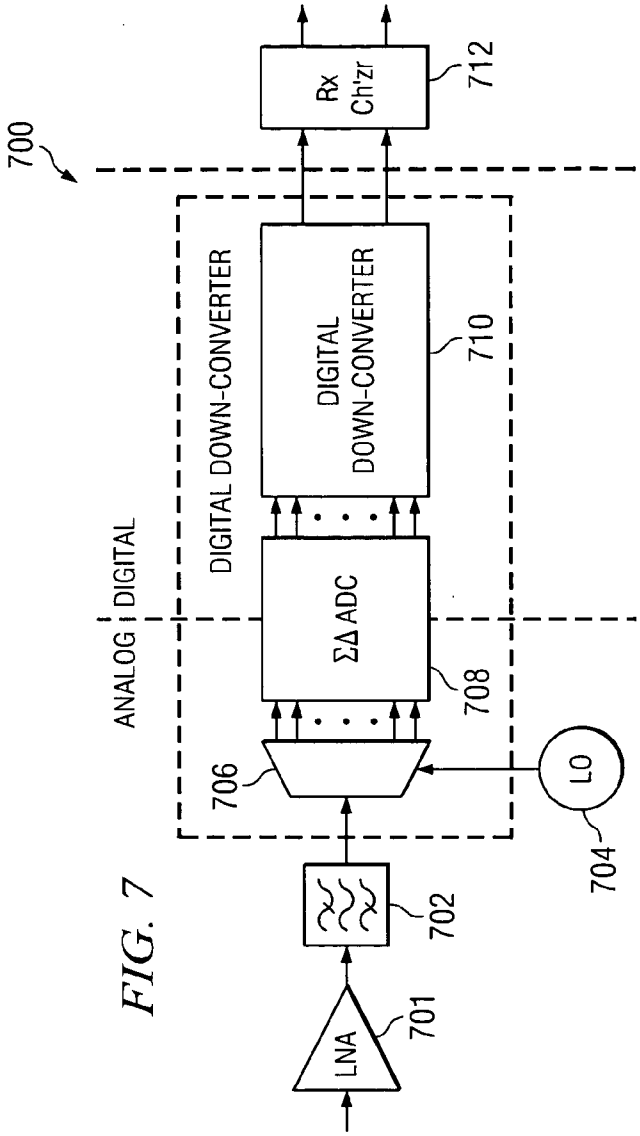

FIG. 7

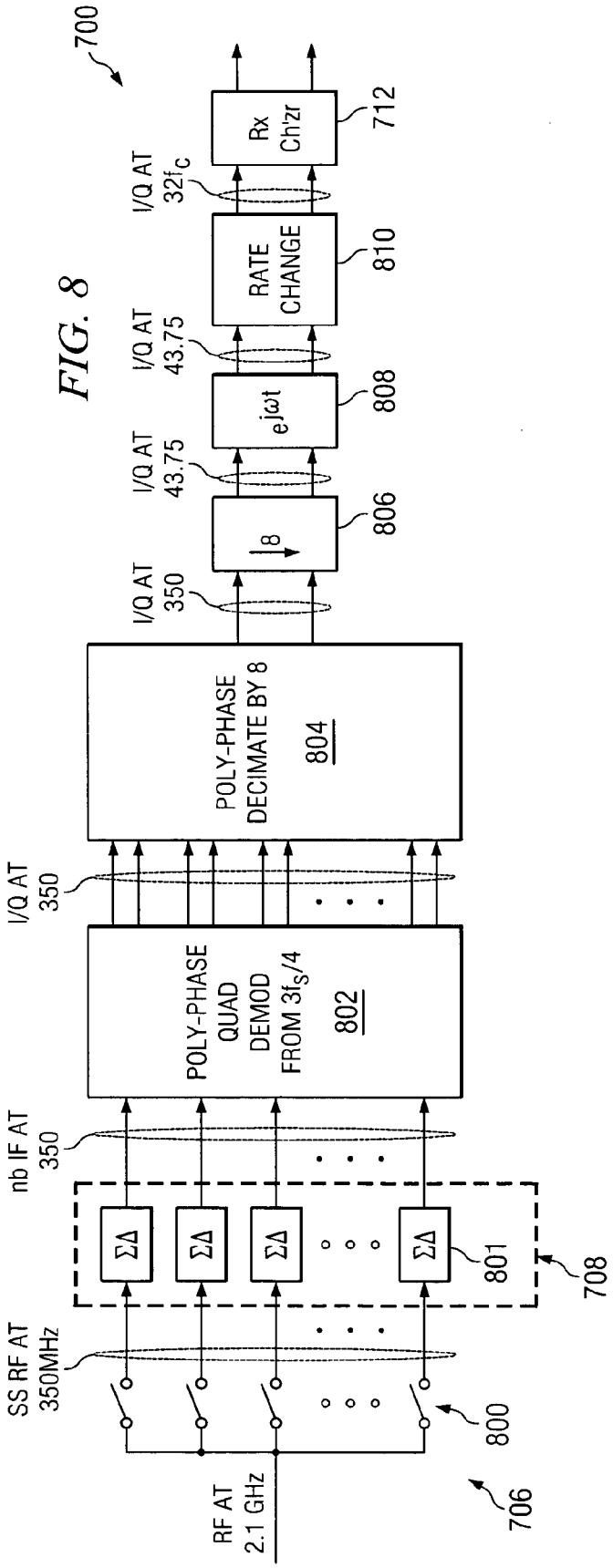
700
FIG. 8
SS RF AT 350MHz
RF AT 2.1 GHz
800
706
ΣΔ
801
708
nb IF AT 350
POLY-PHASE QUAD DEMOD FROM $3f_S/4$
802
I/Q AT 350
POLY-PHASE DECIMATE BY 8
804
I/Q AT 350
↓8
806
I/Q AT 43.75
$e^{j\omega t}$
808
I/Q AT 43.75
RATE CHANGE
810
I/Q AT $32f_c$
Rx Ch'zr
712

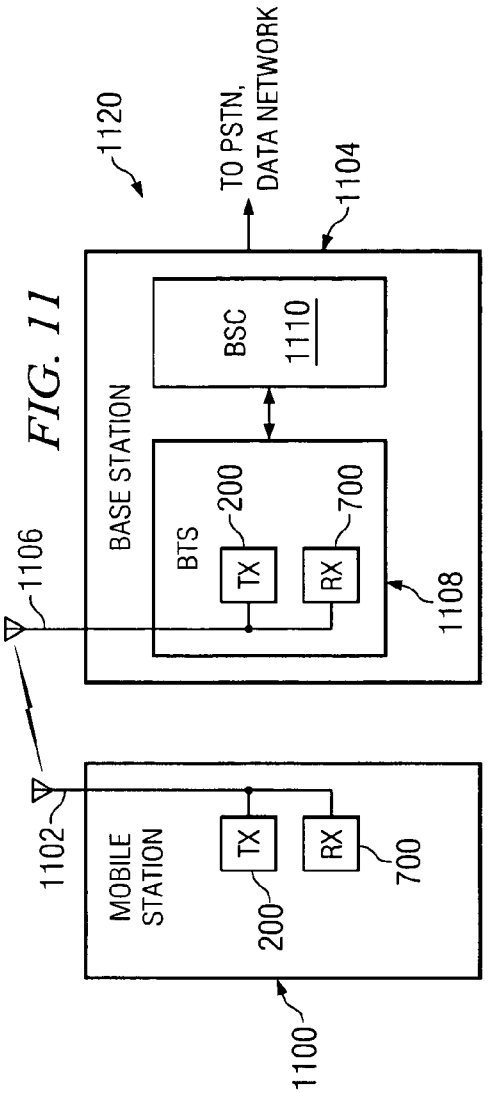

FIG. 11

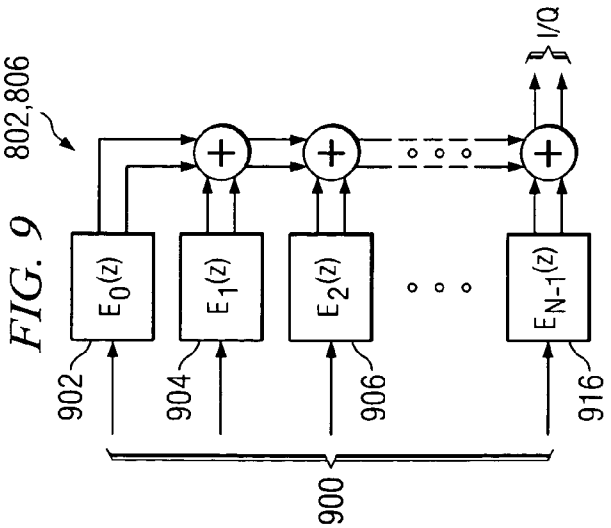

FIG. 9

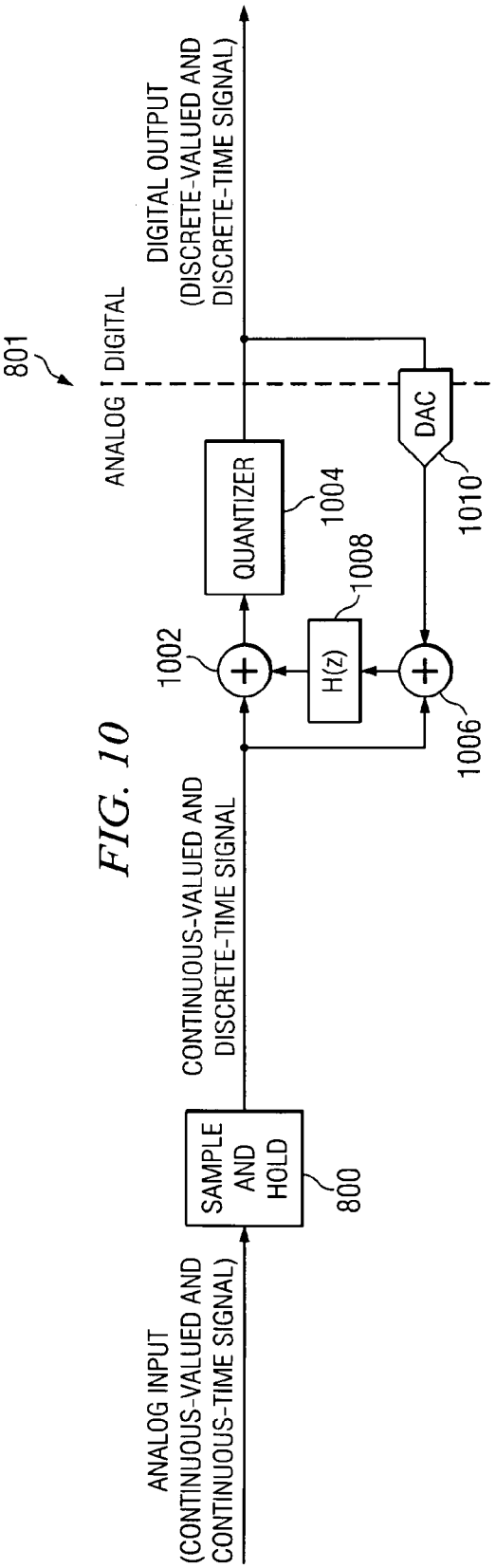

FIG. 10

DIGITAL RECEIVER AND METHOD

CROSS REFERENCE TO RELATED APPLICATION(S)

This application is related to another commonly owned United States patent application entitled "DIGITAL TRANSMITTER AND METHOD" filed concurrently herewith, and identified by reference number Ser. No. 10/403,727, and which is incorporated herein by reference.

TECHNICAL FIELD OF THE INVENTION

The present invention relates to receivers, in particular, to a digital receiver for use in communications.

BACKGROUND

In current digital wireless systems, the traditional up-conversion chain (or significant portion thereof) is primarily analog and includes types such as super-heterodyne, low intermediate frequency (IF) and zero IF up-conversion technology. These technologies start with the conversion of inherently digital signals to analog signals through high performance digital-to-analog (D/A) converters, generally due to the higher frequencies involved. Once converted to the analog domain, various combinations of analog filters, amplifiers, mixers and modulators (and perhaps other analog elements) are cascaded to achieve the up-conversion from the output of the A/D converter(s) to the radio frequency (RF) band of interest (transmit RF signal).

Likewise, on the receiver side, the traditional down-conversion chain (or significant portion thereof) is primarily analog including such types as super-heterodyne, low IF and zero IF down-conversion technology. To achieve the down-conversion, various combinations of analog filters, amplifiers, mixers and demodulators (and perhaps other analog elements) are utilized to achieve the conversion from the RF band of interest (receive RF signal) to the input to A/D converter(s).

Component variation, tolerances, and aging all affect the design requirements, costs, and manufacturability of the analog up-conversion (transmitter) and down-conversion (receiver) chains. Accordingly, there is needed a digital transmitter and digital receiver that utilizes digital technology for the up-conversion and down-conversion chains.

SUMMARY

According to the present invention, there is provided a receiver having a sample and hold circuit for receiving and separating a radio frequency (RF) signal into a plurality of parallel sampled analog signals. An analog-to-digital (A/D) converter converts the plurality of parallel sampled analog signals into a plurality of parallel digital signals. A demodulator receives the parallel digital signals and generates a plurality of demodulated digital signals that are combined into a digital signal by a polyphase circuit. A digital downconverter receives the digital signal having a first rate and downconverts to a baseband digital signal having a second rate.

In another embodiment of the invention, there is provided means for performing the functions as set forth in the paragraph above.

In another embodiment of the invention, there is provided a method of downconverting a received analog signal for data recovery. An RF signal is sampled and separated into a plurality of phased analog signals which are analog-to-digital converted to generate a plurality of phased digital signals. The plurality of phased digital signals are combined into a digital signal having a first rate and downconverted to a downconverted digital signal having a second rate.

According to yet another aspect of the present invention, there is provided a wireless communications device having a receiver including a sample and hold circuit for receiving and separating a radio frequency (RF) signal into a plurality of parallel sampled analog signals. An analog-to-digital (A/D) converter converts the plurality of parallel sampled analog signals into a plurality of parallel digital signals. A demodulator receives the parallel digital signals and generates a plurality of demodulated digital signals that are combined into a digital signal by a polyphase circuit. A digital downconverter receives the digital signal having a first rate and downconverts to a baseband digital signal having a second rate.

BRIEF DESCRIPTION OF THE DRAWINGS

For a more complete understanding of the present invention, and the advantages thereof, reference is now made to the following descriptions taken in conjunction with the accompanying drawings, wherein like numbers designate like objects, and in which:

FIG. **1** is a block diagram of a prior art analog transmitter;

FIG. **2** is a block diagram of an exemplary digital transmitter in accordance with the present invention;

FIG. **2**A is a block diagram of an alternative embodiment of a portion of the digital transmitter in accordance with the present invention;

FIG. **3** is a detailed block diagram of the digital transmitter shown in FIG. **2**;

FIG. **4** illustrates the polyphase interpolate by N and digital quadrature modulator of FIG. **3**;

FIG. **5** is a detailed block diagram of an exemplary sigma-delta modulator shown in FIG. **3** of the present invention;

FIG. **6** is a block diagram of a prior art analog receiver;

FIG. **7** is a block diagram of an exemplary digital receiver in accordance with the present invention;

FIG. **8** is a detailed block diagram of the digital receiver shown in FIG. **7**;

FIG. **9** illustrates the digital quadrature demodulator and polyphase decimate by N of FIG. **8**;

FIG. **10** is a detailed block diagram of an exemplary sigma-delta A/D converter shown in FIG. **8**; and

FIG. **11** is a block diagram of an exemplary wireless communications network, including communication devices incorporating the transmitter and/or receiver of the present invention.

DETAILED DESCRIPTION OF THE INVENTION

Digital Transmitter

With reference to FIG. **1**, there is shown a relevant portion of a prior art analog transmitter **100** of the type used in conventional digital communications systems. The transmitter **100** includes a transmit channelizer **102** receiving coded I and Q digital baseband signal inputs. The I and Q digital inputs each typically comprise a stream of samples (or chips) representing a digital value, or word having n bits. The sample rate (or chip rate) of the I and Q inputs to the channelizer **102** is determined in accordance with the tech-

nology and/or standard utilized (e.g., CDMA(IS-95) is 1.2288 Mcps, UMTS is 3.84 Mcps, etc.).

As will be appreciated, the processing, generation and functionality utilized to generate the I and Q digital signals that are input to the channelizer **102** are not shown or described. This is known to those of ordinary skill in the art. In general terms, the digital data is processed by encoding, interleaving, converting, and spreading (using orthogonal codes and psuedo-random (PN codes)) to generate the I and Q digital baseband signals (often referred to as samples at a particular sampling rate).

It will be understood that the modulation and/or coding scheme utilized in the present invention is not limited to quadrature (I and Q) modulation or coding, and other modulation or coding techniques may be utilized with modifications to the present invention. In addition, the I and Q signals may relate to a single carrier or multiple (1 to N) carriers.

The transmit channelizer **102** receives baseband information in the form of I and Q digital samples (having n bits per sample) and tunes, combines, and up-converts the signals to a higher sampling frequency (or rate), usually thirty-two times the chip frequency (**32**Fc). The channelizer **102** may also process the signals relative to pulse shaping, power control and peak power reduction, etc. The I and Q digital signals output from the channelizer **102** are input to digital-to-analog converters **104** to generate I and Q analog signals. Prior to input to an analog quadrature modulator **108**, the I and Q analog signals are processed by an I/Q adjustment block **106** that performs filtering functions to remove any undesirable signal images and/or imperfections caused by the digital-to-analog conversion process.

The analog quadrature modulator **108** receives the I and Q analog signals and uses them to modulate an RF carrier signal (in-phase carrier and quadrature carrier (ninety degrees out of phase)) generated from a local oscillator (LO) **110** to output a combined and modulated RF carrier signal. The frequency of the RF carrier is determined in accordance with the desired carrier frequency designated by the technology, standard and/or allocated frequency spectrum (e.g., ranges around 850 MHz (IS-95), 1.9 GHz (PCS), 2.1 GHz (UMTS), etc.).

The modulated RF carrier output from the quadrature modulator **108** is further processed with analog amplifier/attenuation/filter elements **112** which may include amplification, attenuation, and filtering functionality as desired (not shown in detail). The output from the analog elements **112** is input to a bandpass filter **114** that eliminates any spurious signals outside the RF band of interest (RF carrier bandwidth or allocation bandwidth for a multi-carrier transmitter). A pre-amplifier **116** amplifies the bandpass-filtered modulated RF carrier signal for input to the power amplifier **118** and eventual output to a transmit antenna (not shown).

With reference to FIG. **2**, there is shown a block diagram of an exemplary digital transmitter **200** in accordance with the present invention. The digital transmitter **200** includes a transmit channelizer **202**, that is the same or similar to the transmit channelizer **102** shown in the prior art analog transmitter **100** of FIG. **1**. The I and Q digital signals may be those associated with a single communications channel (or single user, e.g., communications signal transmitted from a wireless subscriber handset), a group of communications channels (or multiple users, e.g., communications signals transmitted from a base station, or multiple subscriber or data channels). In addition, the transmitter **200** of the present invention may support single or multiple carriers and multiple standards. As will be appreciated, the term digital baseband signals may refer to the inputs to the channelizer **202** and/or the outputs of the channelizer **202** (and any intermediate digital signals in the upconversion and modulation process prior to achieving the modulated intermediate frequency (IF) signals). Accordingly, it will be understood that the digital up-converter (described below) may also include the channelizer **202**.

The I and Q digital outputs of the transmit channelizer **202** are input to a digital up-converter **204** having its output (modulated digital IF signals) thereof input to a digital (digital-to-digital) sigma-delta modulator **206**. The outputs of the digital sigma-delta modulator **206** are input to a high speed digital multiplexer **208**. A local oscillator (LO) **210** generates a local oscillator or clocking signal at a desired frequency (usually a multiple of the carrier frequency) to multiplex the signals input to the multiplexer **208**. The output of the multiplexer **208** is a single bit stream output that is filtered by a bandpass filter **212** that converts the bit stream to analog format and further processes the signal (as described below). The output signal is then input to a power amplifier **214** and forwarded to an antenna (not shown) for transmission.

With reference to FIG. **2**A, there is shown a block diagram of an alternative embodiment of a portion of the digital transmitter **200** in accordance with the present invention. In this embodiment, the output of the multiplexer **208** is a single bit stream output that is input to a switching amplifier **220** whose output is filtered by a bandpass filter **222**. The signal output from the bandpass filter is then forwarded to an antenna (not shown) for transmission. Additional embodiments may be utilized, and the present invention in not limited to the structures and methods of signal transmission, filtering, and power amplification shown in FIGS. **2** and **2**A (i.e., subsequent processing to the output from the digital multiplexer **208**). It will be understood that the output of the multiplexer **208** is described as a single bit stream output, however, this may alternatively be multi-bit outputs and/or multiple bit streams. The signal configuration may also apply to the output of the switching amplifier **220**.

In general terms, by using multi-rate signal processing techniques in the present invention, the digital baseband signal can be effectively up-sampled (or up-converted) to a sample rate that is greater than the desired carrier frequency in N phases (e.g., a polyphase filter where each phase operates at 4/n times the carrier frequency (or the target sampling rate) divided by N). In the exemplary embodiment of the digital transmitter described below, the sample rate is four times the desired carrier frequency. One exemplary embodiment of the present invention will be advantageously described hereafter using an example where the carrier frequency is 2.1 GHz, the sample rate is 8.4 Gsamples/sec, N=32, and thus each phase N would operate at 262.5 Msamples/sec). As will be understood, other examples, variations, and embodiments are possible. Once the N phases are generated (both I and Q), a polyphase digital quadrature modulator programmed to a center frequency equal to the desired carrier frequency modulates the signals.

The functionality of the digital quadrature modulator may be obtained with relatively simple components, elements or means (such as a multiplexer, inverters and control logic, not shown, either hardware or software) when the target carrier frequency=n*sample rate/4. Within this equation, n is an integer, and is preferably odd. In the example to be described more fully below, where n=1, if N is divisible by four then the quadrature modulator may be implemented with no

additional hardware and its functionality can be obtained by modifying the polyphase filter coefficients (of the polyphase interpolate by N element).

The next stage is a digital-to-digital sigma-delta modulator that converts the multi-bit polyphase outputs to a set noise-shaped single bit outputs. A high speed digital multiplexer converts the N parallel bit streams into a single bit stream at N times the input sampling rate (or four times the desired carrier frequency). This signal is applied to an RF bandpass analog reconstruction filter (such as an RF surface acoustic wave (SAW) filter) to select the image at the desired carrier frequency and remove the sample images and the sigma-delta modulator shaped noise. Then, the signal is applied to the power amplifier. As will be appreciated, the bandpass filter may optionally be placed after a switching amplifier (as shown in FIG. **2**A) to achieve a higher level of efficiency. It will be understood that the outputs of the modulator and multiplexer are described as single bit outputs and a single bit stream, however, these may alternatively be multi-bit outputs and/or multiple bit streams.

Multi-rate digital signal processing involves changes of the sampling rates as part of the signal processing. Changing a signal from given sample rate to a different sample rate is called sampling rate conversion. The basic operations in "multi-rate" signal processing are decimation (decrease the sampling rate) interpolation (increase the sampling rate) or resampling (combination of decimation and interpolation to change the sampling rate by a fractional value, such as 4/3 or 1.5). Decimation usually involves lowpass filtering (FIR or IIR filters) followed by downsampling, while interpolation usually involves upsampling (referred to as "zero stuffing") followed by lowpass filtering (FIR filter). Multi-rate signal processing and these operations are well-known to those skilled in the art.

Now with reference to FIG. **3**, there is shown a more detailed block diagram of the digital transmitter **200** in accordance with the present invention. The digital transmitter **200** includes the transmit channelizer **202** (as described above). The output of the channelizer **202** includes I and Q digital signals (each sample having one or more bits) at a sampling rate or frequency that is a multiple of the chip frequency (fc), and in this particular embodiment, the rate or frequency is thirty-two times the chip frequency (for example, if CDMA modulation were utilized under IS-95, the chip frequency would be 1.2288 Msps and the output of the transmit channelizer **202** would be 39.3216 Msps).

A rate change element **300** changes the sampling rate of the I and Q digital signal outputs of the channelizer **202** to a rate that is a sub-multiple of the final sampling rate (in the exemplary embodiment the target sample rate is 8.4 Gsps). The I and Q digital signals (at 131.25 Msps) are input to a complex channel tuner **302**. The complex channel tuner **302** places the carrier or carriers within a certain sub-band of a particular band, as desired. The complex tuner **302** when combined with sufficient bandwidth of the digital-to-digital sigma-delta modulator allows entirely digital tuning within a band. As will be appreciated, the tuner **302** is optional and may or may not be included within the transmitter **200** of the present invention. If not included, a tunable LO and additional filters may be desirable. The I and Q digital signals are then input to an interpolator (by factor 2) **304** that increases (upconverts) the sampling rate of the I and Q digital signals from 131.25 Msps to 262.5 Msps.

The I and Q signals (at 262.5 Msps) are received by a polyphase interpolator **306** that separates each of the I and Q digital signals into N phases, with each phase operating at the same frequency or rate as the input signals. In this exemplary embodiment, the polyphase interpolator **306** interpolates by a factor of thirty-two (N=32) such that thirty-two pairs (of I and Q digital signals) are generated, referred to as phases or filter phases. This effectively functions as an interpolator with a factor of thirty-two. As will be appreciated, different modulation techniques may be utilized such that there may exist one or more signals for each phase.

In a standard interpolator (i.e., non-polyphase), the input signal (low sampling rate) is upsampled (usually by zero stuffing) followed by an interpolation filter (at the higher sampling rate). As such, the filtering that occurs at the higher rate is computationally intensive. Normally, the filter that is utilized is a digital finite impulse response (FIR) filter (a digital infinite impulse response (IIR) filter may be used, but it is more common to utilize FIR filters). Digital FIR (and IIR) filters and methods are known to those skilled in the art.

In order to reduce the significant processing requirements of standard interpolators, designers often use a technique known as polyphase decomposition. The fundamental idea behind polyphase decomposition is the partitioning of the filter operating at the high sample rate into a number of smaller filters operating at the lower sampling rate. Each of the smaller filters is referred to as a "subfilter" or "filter phase". Each subfilter uses only a subset of the coefficients of the high sample rate filter (such decomposition also applies to decimation).

In general terms, polyphase interpolation architecture includes the partitioning of the input single into L phases (where L is the interpolation factor). The L inputs are filtered using the L different "subfilters" or "filter phases" derived from the original overall filter. The total number T of taps for the overall FIR filter should usually be a multiple of L, and generally the number of taps per subfilter is three or more. However, any number of taps may be used to provide the desired filtering function. The coefficients of each subfilter are determined by skipping every Lth coefficient, starting at coefficients zero through L−1. In the standard polyphase interpolator, the constituent L phase outputs are recombined to generate the output at the higher sampling rate (L times the input sampling rate).

The polyphase interpolator **306** of the present invention differs from the standard polyphase interpolator in that the constituent I and Q phases are not recombined. The phases are maintained as separate parallel paths that are used as inputs to a polyphase quadrature modulator **308**. This approach allows for lower sampling rates to be utilized until the final output function, and allowing more efficient implementation of the function.

The quadrature modulator **308** converts (modulates and combines) the I and Q signals (each of the N phases, in the exemplary embodiment, N corresponds to L) to a modulated intermediate frequency (IF) signal or signals. In a standard approach, a quadrature oscillator signal output (not shown) is used to multiply the in-phase (I) and quadrature phase (Q) signals to generate a modulated IF signal. In the digital domain, if the relationship between the IF and oscillator signal is chosen such that the target carrier frequency=nFs/4, where n is odd, then the samples of the oscillator signal represent only one of three states: 1, 0−1. In other words, if the sampling of the sine wave (in-phase) and cosine wave (quadrature) is chosen at four times the frequency of the sine and cosine waves, then there would exist only these three distinct values. This technique is known in the art and reduces the complexity of a digital quadrature modulator. The resulting sample stream for the sine (or cosine) wave is repetitive with period of four, e.g., 0, 1, 0, −1, 0, 1, 0, −1, 0, 1, 0, −1, etc.

By selecting a polyphase filter with the number N of subfilters to be a multiple of 4 phases (e.g., 4, 8, 16, 32, etc.), the samples from the digital quadrature modulator **308** will have the same multiplier in a given phase. For example, only showing the first four phases, the sine wave samples are:

phase zero: 0, 0, 0, 0, 0, . . .
phase one: 1, 1, 1, 1, 1, . . .
phase two: 0, 0, 0, 0, 0, . . .
phase three: −1, −1, −1, −1, −1, . . .

and the cosine wave samples are:

phase zero: 1, 1, 1, 1, 1, . . .
phase one: 0, 0, 0, 0, 0, . . .
phase two: −1, −1, −1, −1, −1, . . .
phase three: 0, 0, 0, 0, 0, . . .

Reflecting the target carrier frequency=nFs/4 sampled quadrature modulator into the phase filters effectively causes either the I or Q branch to go to zero (for that particular pair) and thus the I/Q signal is converted into a single stream of modulated IF data. As will be appreciated for the four phases shown above, the modulated IF signal for each phase will be +I, +Q, −I, −Q, respectively. Therefore, the digital quadrature modulator **308** may be constructed using only the subfilters or filter phases of the polyphase interplator **306** (i.e., the polyphase filter) by changing the filter coefficients of the subfilters. Using this approach reduces or eliminates any physical elements or functions necessary to implement the digital quadrature modulator **308** of the present invention (other than modifying the coefficients of the subfilters or discarding certain signal stream(s)).

Now referring to FIG. **4**, there is illustrated in more detail the combination of the polyphase interpolator **306** and digital quadrature modulator **308** shown in FIG. **3**, in essence illustrating a polyphase filter. The I and Q digital baseband signals **400** are input to the polyphase filter having N number of subfilters or filter phases, identified by reference numerals **402** thru **464**, with subfilters **408** thru **462** not shown. In the exemplary embodiment shown, N=32 and therefore there are thirty-two subfilters as illustrated. Unlike a standard polyphase interpolator, the polyphase interpolator **306** of the present invention does not recombine the outputs of the subfilters **402**–**464**.

Each subfilter **402**–**464** has a specific transfer function $R_i(z)$. The transfer function depends on the coefficients and structure of the overall digital FIR polyphase filter (this filter may also be an IIR or other type of filter, though FIRs are more common). For example, assuming the overall digital FIR polyphase filter (interpolator) is designed with 256 taps, each subfilter would have eight coefficients (every Nth coefficient of the 256). Therefore, for each of the N (32) paths (I and Q), each subfilter applies its respective coefficients to eight consecutive samples in its respective path. As was described above, the quadrature modulator **308** may be implemented by modifying the coefficients of the subfilters **402**–**464**.

Now referring back to FIG. **3**, the output of the combination of the interpolator **306** and quadrature modulator **308** comprises N outputs at the input sampling rate (i.e., thirty-two outputs each at a sample rate of 262.5 Msps). These outputs are input to a digital-to-digital sigma-delta modulator **310**. In one embodiment, the sigma-delta modulator **310** is constructed or configured as a single unit with multiple inputs/outputs. As will be appreciated, the sigma-delta modulator **310** may be constructed with different configurations or structures as desired by one of ordinary skill in the art. In an exemplary embodiment, the sigma-delta modulator **310** includes a bank or plurality of sigma-delta modulators **311**, as shown, with each modulator **311** receiving and processing a sample stream. As described earlier, and will be appreciated, each sample is a digital word having n number of bits. The n-bit (multibit) input samples are sigma-delta modulated and converted to a single bit output (each output operating at the sample rate of 262.5 Msps). As described earlier, the outputs of the modulators **311** (or **310**) may also be multi-bit.

Sigma-delta modulators are used primarily in A/D and D/A converters and provide a means of obtaining improved in-band signal-to-noise ratio performance when a quantization operation is applied. The sigma-delta structure effectively shapes the resulting quantization noise. For a general overview of Sigma-Delta Converters, see, Aziz, Pervez M. et al., "An Overview of Sigma-Delta Converter", IEEE Signal Processing Magazine, January 1996, pp. 61–84, which is incorporated herein by reference.

The digital-to-digital sigma-delta modulator **310** (or modulators **311**) combine, or operate, effectively to form an "N-path" sigma-delta modulator. An N-path modulator comprises N identical internal sigma-delta modulators operating in parallel. In such a modulator, the inputs and outputs to each internal sigma-delta modulator are demultiplexed/multiplexed such that the overall structure behaves as a single sigma-delta modulator operating at N times the operating rate of each of the internal converters. In the present invention, the input data streams are already effectively demultiplexed by the polyphase filters of the interpolator **306**. An advantage of this approach is that at a high operating rate (Fs) it is more practical to implement the multiple internal sigma-delta modulators running at the reduced operating rate (Fs/N) than implementing a single modulator operating at the high rate (Fs).

One important feature of an N-path configured sigma-delta modulator is the noise-shaping response. This response consists of N "images" of the noise-shaping response of the internal (and identical) sigma-delta modulators. For example, if N=4 and the input rate is 25 Mhz and output rate is 100 Mhz, there would be noise-shaping "notches" in the frequency domain positioned at 0, 25, 50, 75 and 100 MHz (assuming a low-pass modulator). The number N also corresponds to, or identifies, the number of images (and effectively the number of notches) that appear in the overall modulator response. By design, noise is suppressed the greatest in these notch locations. Therefore, for a given sampling rate (Fs), N is chosen such that a notch is positioned in the frequency band where the signal of interest will reside. The sigma-delta modulator effectively shapes the resulting quantization noise out of the RF band of interest (i.e., the carrier frequencies).

In the exemplary embodiment, the sampling rate (carrier frequency is 2.1 GHz) is 8.4 Gsps and N=32 resulting in notch locations having multiples of 262.5 MHz (e.g., 0, 262.5, 525, . . . , 2100, . . . , 8400 Mhz).

Now referring to FIG. **5**, there is illustrated a detailed block diagram of an exemplary single digital-to-digital sigma-delta modulator **311** shown in FIG. **3** of the present invention. Each sigma-delta modulator **311** includes a summation circuit **500**, a quantizer **502**, a difference circuit **504** and a filter circuit **506** having transfer function H(z). The summation circuit **500** sums the modulated IF input signal (in the form of a digital word having n bits) and a delayed version (filter circuit **506**) of a difference signal between the IF modulated input signal and the output signal of the quantizer **502** generated by the difference circuit **504**. In the exemplary embodiment, the digital-to-digital sigma-delta

modulator **311** receives a multi-bit input signal and most-significant-bit (MSB) aligns it with the single bit output that is fed back.

Now referring back to FIGS. **2**, **2**A and **3**, the single-bit outputs of each digital-to-digital sigma-delta modulator **311** are input to a high speed digital multiplexer **208** that converts the N parallel bit streams into a single bit stream at N times the sampling rate of each parallel stream. In the exemplary embodiment, the single bit stream rate would be 8.4 Gsps (i.e., four times the desired carrier frequency of 2.1 GHz). This signal is then applied to an analog RF bandpass reconstruction filter **212** (such as a SAW filter) to pass the image/signal at the desired carrier frequency, thus removing the sigma-delta shaped noise and any signals/images outside the RF band of interest (i.e., the desired carrier frequency). The filtered signal is then input to a standard power amplifier **214** for transmission (to the antenna, not shown). Alternatively, the configuration illustrated in FIG. **2**A may be utilized.

As will be appreciated, the local oscillator **210** is used to successively select each phase (N=32) to generate the 8.4 data stream. Thus the analog local oscillator **210** running at a frequency of 8.4 GHz would be utilized. One way to implement the control signals to the multiplexer **208** is to drive a 5-bit counter with the LO signal and apply the 5-bit counter output to the multiplexer control (five mux input control signals).

The architecture of the present invention provides the advantage that the final multiplexer **208** operates at the high sampling rate (Fs) by combining the multiple parallel data streams from each of the parallel paths into a single output data stream. All other digital elements of the transmitter **200** (processing the signals leading to input to multiplexer) may operate at the lower rate.

As will be appreciated, the sigma-delta modulators **311** of the exemplary embodiment convert a multi-bit input to a single bit output. This single bit output stream (from the multiplexer **208**) drives a conventional power amplifier by utilizing the analog bandpass reconstruction filter **212**. An alternative embodiment shown in FIG. **2**A includes a switching-type amplifier directly driven by the single bit output stream (with an analog filter subsequent to the amplifier). In another embodiment (not shown), the sigma-delta modulator outputs are multi-level and are used to drive a multi-phase switching power amplifier (where the multi-level outputs are decoded to form switching waveforms for each of the constituent phases).

Digital Receiver

With reference to FIG. **6**, there is shown a relevant portion of a prior art analog receiver **600** of the type used in conventional digital communications systems. The receiver **600** receives an RF signal on a receiver antenna (not shown) for input to a low noise amplifier (LNA) **602**. The amplified RF signal is filtered, attenuated and amplified again by the components identified by reference numerals **604** and **606**. The frequency of the RF signal is determined in accordance with the desired carrier frequency designated by the technology, standard, and/or allocated frequency spectrum (e.g., ranges around **850** MHz (IS-95), 1.9 GHz (PCS), 2.1 GHz (UMTS), etc.).

An analog quadrature demodulator **608** receives the RF signal and demodulates the signal using in-phase and quadrature carrier signals generated from a local oscillator (LO) **609**. It will be understood that the demodulation and/or decoding scheme utilized in the present invention is not limited to quadrature (I and Q) demodulation or decoding, and other demodulation or decoding techniques may be utilized with modifications to the present invention. In addition, the I and Q signals may relate to a single carrier or multiple (1 to N) carriers.

The demodulated I and Q analog signals are subsequently processed by low pass filters **610**, amplifiers **612**, tunable low pass filters **614** (functioning to select one or more carriers), and/or low pass filters **616**. The demodulated I and Q analog signals are input to analog-to-digital converters **618** to generate I and Q digital signals. The I and Q digital output signals each typically comprise a stream of samples representing a digital value, or word having n bits. At this point, the I and Q digital signals are typically operating at a sampling frequency (or rate) that is usually thirty-two times the chip frequency (32Fc). A different frequency or rate for the I and Q signals output from the A/D converters **618** may be desired and/or utilized.

The demodulated I and Q digital signals (at a rate higher than the chip rate or frequency) are input to a receive channelizer **620**. The receive channelizer **620** further down-converts and filters/selects the I and Q signals to generate individual channels (or carriers) of I and Q digital baseband signals. The sample rate (or chip rate or frequency) of the I and Q outputs from the receive channelizer **620** is generally determined in accordance with the technology and/or standard utilized (e.g., CDMA(IS-95) is 1.2288 Mcps, UMTS is 3.84 Mcps, or a multiple thereof, etc.). In general terms, the receive channelizer **102** receives I and Q digital samples (having n bits per sample) and tunes, downconverts, and separates the signals to a lower sampling frequency (or rate), usually equal to a multiple of the chip rate or chip frequency (Fc). The receive channelizer **620** may also process the signals to measure power or inject noise.

As will be appreciated, the processing, generation and functionality utilized to further process and recover the received data from the I and Q digital signals that are output from the receive channelizer **620** are not shown or described. This is known to those of ordinary skill in the art. In general terms, the digital data is further processed by de-spreading (using orthogonal codes and psuedo-random (PN codes)) de-interleaving, and decoding to generate the received data.

With reference to FIG. **7**, there is shown a block diagram of an exemplary digital receiver **700** in accordance with the present invention. The digital receiver **700** includes a receive channelizer **712**, that is the same or similar to the receive channelizer **620** shown in the prior art analog receiver **600** of FIG. **6**. The I and Q digital signals (or other types of signals, depending on the modulation scheme utilized) may be those associated with a single communications channel (or single user, e.g., communications signal transmitted from a wireless subscriber handset), a group of communications channels (or multiple users, e.g., communications signals transmitted from a base station, or multiple subscriber or data channels). In addition, the receiver **700** of the present invention may support single or multiple carriers and multiple standards. As will be appreciated, the term digital baseband signals may refer to the outputs from the channelizer **712** and/or the inputs to the channelizer **712** (and any intermediate digital signals in the downconversion process after demodulation of the intermediate frequency (IF) signals). Accordingly, it will be understood that the digital down-converter (described below) may also include the channelizer **712**.

The I and Q digital signals utilized as inputs to the receive channelizer **712** are output from a digital down-converter **710** having its input thereof output from an analog-to-digital (A/D) sigma-delta converter **708**. The inputs to the A/D sigma-delta converter **708** are generated by a phased sample

and hold circuit **706**. A local oscillator (LO) **704** generates a local clocking signal operating at a desired frequency (usually a multiple of the desired carrier frequency) to provide control and timing of the phased sample and hold circuit **706** to further process an input RF signal. The input to the phased sample and hold circuit **706** is a single (amplified) RF signal that is filtered by a bandpass filter **702**. The amplified RF signal is generated by a low noise amplifier (LNA) **701** that has received the RF signal from an antenna (not shown).

By using multi-rate signal processing techniques in the present invention, the received RF signal can be effectively digitized and down-sampled (or down-converted) to IF and baseband by dividing the signal into N phases. In the exemplary embodiment of the receiver described below, the input sample rate is ⅔ the desired carrier frequency (of the received RF signal) and the parallel branch sample rate is one-eighth the input sample rate. One exemplary embodiment of the present invention will be advantageously described hereafter using an example where the sample rate is 2.8 Gsps, N=8, and thus each phase N would operate at 350 Gsps. As will be understood, other examples, variations, and embodiments are possible. Once the N phases are generated, a polyphase digital quadrature demodulator programmed to a center frequency equal to the desired carrier frequency demodulates the signals into the respective I and Q component signals.

The functionality of the digital demodulator may be obtained with relatively simple components, elements or means (not shown, either hardware or software) when the target carrier frequency=n*sample rate/4. In the example to be described more fully below, where n=3, if N is divisible by four then the quadrature demodulator may be implemented with no additional hardware and its functionality can be obtained by modifying the polyphase filter coefficients (of the polyphase decimate by N element).

The prior stage or element is an A/D sigma-delta converter **708** that converts the phased inputs to a set of multi-bit outputs (i.e., polyphase conversion). The polyphase A/D sigma-delta conversion digitizes signals in multiple bands or phases (N=8, in this example). As will be appreciated, digitization may cause aliasing, therefore, it may be advantageous to include RF bandpass filters (such as a SAW type filter) prior to input to the A/D sigma-delta converter **708**. After digitization, the signals are digitally processed to perform demodulation, decimation and filtering, channel tuning, rate conversion, etc.

Now with reference to FIG. **8**, there is shown a more detailed block diagram of the exemplary digital receiver **700** in accordance with the present invention. The digital receiver **700** includes the receive channelizer **712** (as described above). The input to the channelizer **712** includes I and Q digital signals (each sample having n bits) at a sampling rate or frequency that is a multiple of the chip frequency (fc), and in this particular embodiment, the rate or frequency is thirty-two times the chip frequency (for example, if CDMA modulation were utilized under IS-95, the chip frequency would be 1.2288 Msps and the input of the receive channelizer **712** would be 39.3216 Msps).

A rate change element **810** changes the sampling rate of I and Q digital signals that are input to the rate change element **810** to generate outputs (to the channelizer **712**) at thirty-two times the chip frequency or rate. The I and Q digital signals input to the rate change element **810** have a frequency or rate that is a sub-multiple of the target sampling rate or frequency (in the exemplary embodiment, the target sample rate is 2.8 Gsps). The I and Q digital signals (shown at 43.75 Msps) are received from a complex channel tuner **808**. The complex channel tuner **808** places the desired carrier or carriers within a certain sub-band of a particular band, as desired. The complex tuner **808** when combined with sufficient bandwidth of the A/D sigma-delta converter allows entirely digital tuning within a band. As will be appreciated, the tuner **808** is optional and may or may not be included within the receiver **700** of the present invention. The I and Q digital signals received by the tuner **808** are generated by a decimator **806** (by factor 8) that decreases (downconverts) the sampling rate of the I and Q digital signals from 350 Msps to 43.75 Msps.

The I and Q signals (at 350 Msps) input to the decimator **806** are received from a polyphase decimator **804** that combines the N phases of the I and Q digital signals into single I and Q digital signals. The polyphase decimator **804** utilizes the decomposition technique (as described previously). Each input phase to the decimator **804** operates at the same frequency or rate as the output signals to the decimator **804**. In this exemplary embodiment, the polyphase decimator **804** decimates by a factor of eight (N=8) such that eight pairs (of I and Q digital signals) are received, each referred to as a phase. This effectively functions as a decimator with a factor of eight. As will be appreciated, different modulation techniques may be utilized such that there may exist one or more signals for each phase.

In a standard decimator (i.e., non-polyphase), the input signal (high sampling rate) is filtered (filtering at the higher sampling rate) followed by downsampling. As such, the filtering that occurs at the higher rate is computationally intensive. Normally, FIR and/or IIR digital filters are utilized, with FIR filters being the most commonly used. Digital FIR (and IIR) filters and methods are known to those skilled in the art.

As discussed previously, polyphase techniques partition the filter operating at the high sample rate into number of smaller filters operating at the lower sampling rate. The polyphase decimation architecture includes the combining (of the already partitioned input signals) of the input signals from M time-delayed phases (where M is the decimation factor).

Each time-delayed phase is input to a digital FIR filter having T taps and coefficients (of an overall FIR filter). The M inputs are filtered using M different "subfilters" or "filter phases" derived from the original overall filter. The total number T of taps for the overall FIR filter should usually be a multiple of M, and generally the number of taps per subfilter is three or more. However, any number of taps may be used to provide the desired filtering function. The coefficients of each subfilter are determined by skipping every Mth coefficient, starting at coefficients zero through M−**1**.

In the standard polyphase decimator, the input signal is time-delayed to generate the constituent M phase inputs, which are then filtered at the lower sampling rate of 1/M times the input sampling rate, and recombined to generate the output at the lower sampling rate.

The polyphase decimator **804** of the present invention differs from the standard polyphase decimator in that the input signals are already divided into the constituent M phases, thus no time delayed signals are generated at the input of the decimator **804**. These phases are maintained as separate parallel paths as output from a polyphase quadrature demodulator **802**. This approach allows for lower sampling rates to be utilized in the digital portion of the receiver **700**.

The polyphase quadrature demodulator **802** demodulates and separates (i.e., converts) the digitized and phased RF

signals (each of the M phases), referred to as the modulated digital IF signals, to I and Q signals (per phase). In the exemplary embodiment, N corresponds to M. In the standard approach, quadrature oscillator signal outputs (not shown) are used to multiply the RF signal to generate the in-phase (I) and quadrature phase (Q) demodulated signals. In the digital domain, if the relationship between the target carrier frequency and oscillator signal is chosen such that the target carrier frequency=nFs/4, where n is odd, then the samples of the oscillator signal represent only one of three states: 1, 0 −1. This has been described previously with respect to the transmitter. By selecting a polyphase filter with the number N of subfilters (or phases) to be a multiple of 4 phases (e.g., 4, 8, 16, 32, etc.), the samples from the digital quadrature modulator **308** will have the same multiplier in a given phase.

Therefore, the digital quadrature demodulator **802** may be constructed using only the subfilters or filter phases (i.e., FIR subfilters) of the polyphase decimator **804** by changing the filter coefficients of the subfilters. Using this approach reduces or eliminates any physical elements or functions necessary to implement the digital quadrature demodulator **802** of the present invention (other than modifying the coefficients of the subfilters).

Now referring to FIG. **9**, there is illustrated in more detail the polyphase decimator **804** and digital quadrature demodulator **802** shown in FIG. **8**, illustrating a polyphase filter. The modulated IF phased digital signals **900** are input as shown to each of N number of subfilters, identified by reference numerals **902** thru **916**, with subfilters **908** thru **914** not shown. In the exemplary embodiment shown, N=8 and therefore there are eight subfilters, as illustrated. Different from a standard polyphase decimator, the polyphase decimator **306** of the present invention does not time delay the input signal, and thus receives a plurality of inputs signals, for input to the subfilters **902**–**916**.

Each subfilter **902**–**916** has a specific transfer function $E_i(z)$. The transfer function depends on the coefficients and structure of the overall digital FIR filter. For example, assuming the overall FIR filter (decimator) is designed with 64 taps, each subfilter would have eight coefficients (every Mth coefficient of the 64). Therefore, for each of the N (8) paths (I and Q), each subfilter applies its respective coefficients to eight consecutive samples in its respective path. As was described above, the quadrature demodulator **802** may be implemented by modifying the coefficients of the subfilters **902**–**916**. The outputs of subfilters **902**–**916** are summed to generate the I and Q demodulated digital signals.

Now referring back to FIG. **8**, the inputs to the combination of the decimator **804** and quadrature demodulator **802** comprises N=8 inputs at the input sampling rate (i.e., eight inputs each at a sample rate of 350 Msps). These digital inputs were generated from an A/D sigma-delta converter **708**. In one embodiment, the sigma-delta converter **708** is constructed or configured as a single unit with multiple inputs/outputs. It will be understood that the sigma-delta converter **708** may be constructed with different configurations or structures as desired by those skilled in the art. In an exemplary embodiment, the A/D sigma-delta converter **708** includes a bank or plurality of A/D sigma-delta converters **801**, as shown, with each converter **801** receiving and processing an RF signal stream. As described earlier, and will be appreciated, each partitioned and phased input sample to the converters **801** is an RF signal. Each phased analog signal is digitized to a digital word or binary value having n number of bits. The input signals are sigma-delta A/D converted to a single or multi-bit output (each input and output operating at the sample rate of 350 Msps).

The A/D sigma-delta converter **708** (or converters **801**) combine, or operate, effectively, in one exemplary embodiment, to form an "N-path" sigma-delta converter. An N-path converter comprises N identical internal sigma-delta A/D converters operating in parallel. In such a converter, the inputs and outputs to each internal sigma-delta A/D converter have been demultiplexed/multiplexed such that the overall structure behaves as a single sigma-delta converter operating at N times the operating rate of each of the internal converters. In the present invention, the input data streams are already effectively generated by the phased sample and hold circuit **706**. An advantage of this approach is that at a high operating rate (Fs) it is more practical to implement the multiple internal A/D sigma-delta converters running at the reduced operating rate (Fs/N) than implementing a single converter operating at the high rate (Fs).

Now referring to FIG. **10**, there illustrated a detailed block diagram of an exemplary embodiment of the single A/D sigma-delta converter **801** shown in FIG. **8** of the present invention. Each A/D sigma-delta converter **801** includes a sample and hold circuit **800** (shown as part of the sample and hold circuit **706**), a summation circuit **1002**, a quantizer **1004**, a difference circuit **1006** a filter circuit **1008** having transfer function H(z), and a digital-to-analog (D/A) converter **1010**. The transfer function H(z) is designed to "shape" noise out of the band of interest. The summation circuit **1002** sums the output (in the form of an analog signal) from the sample and hold circuit **800** with the output of the filter circuit **1008** to generate the input to the quantizer **1004**. The digital output of the quantizer **1004** is converted to analog by the D/A converter **1010**. The outputs of the sample and hold circuit **800** and D/A converter **1010** are input to the difference circuit **1006** whose output is input to the filter circuit **1008**. As will be appreciated, each of the quantizer **1004** and D/A converter **1010** are n-bit devices, as desired.

Now referring back to FIGS. **6** and **7**, the RF signal inputs to the A/D sigma-delta converter **708** were generated by the phased sample and hold circuit **706** that selectively samples and delays the RF signal stream into N parallel RF signal streams. The circuit **706** samples (offset by one period of the sampling rate) the input RF signal and holds each sample for a time period equal to N times the target sampling period of the RF signal. The circuit **706** is illustrated as including multiple sample and hold elements **800**. In the exemplary embodiment, the RF signal stream has a carrier frequency of 2.1 GHz, and the desired target sampling rate is 2.8 Gsps. Prior to input to the phased sample and hold circuit **706**, the RF signal is filtered by an analog RF bandpass filter **702** (such as a SAW filter) to pass the image/signal at the desired carrier frequency, thus removing any signals/images outside the RF band of interest (i.e., the desired carrier frequency). As will be appreciated, the unfiltered RF signal was received by the receiver **700** (from an antenna, not shown).

As will be appreciated, the local oscillator **704** is used to select and hold each phase (N=8) at the input of the A/D sigma-delta converter. Thus, the analog local oscillator **704** operating at a frequency of 2.8 GHz would be utilized.

The architecture of the present invention provides the advantage that the sample and hold circuit **706** operates at a high sampling rate (Fs) by separating the single RF signal into multiple parallel signal streams. As such, all other elements of the receiver **700** (subsequent to the sample and hold circuit) may operate at the lower rate (including the A/D converters).

RF Communications Network

Now referring to FIG. **11**, there is illustrated a block diagram of an exemplary wireless communications network **1120**. The wireless communications network **1120** includes a first wireless communications device **1100** and a second wireless communications device **1104**. The first wireless communications device **1100** is shown including the transmitter **200** and the receiver **700** as described above and in accordance with the present invention. Optionally, the communications device **1100** may include only one of the transmitter **200** and receiver **700** and further include a receiver or transmitter, respectively, that may be of a type from the prior art (or analog). Similarly, the second wireless communications device **1104** includes the transmitter **200** and the receiver **700** as described above and in accordance with the present invention. Optionally, the communications device **1104** may include only one of the transmitter **200** and receiver **700** and further include a receiver or transmitter, respectively, that may be of a type from the prior art (or analog). The two communications devices **1100** and **1104** communicate via RF signals utilizing an antenna **1102** and an antenna **1106**, respectively, as shown.

The exemplary wireless communications network **1120** may operate in accordance with one or more wireless protocols or technologies, such as CDMA, TDMA, FDMA, UMTS, etc. (and versions thereof). Further, the network **1120** may support circuit-switched, and packet-switched or packet data communications.

In the exemplary embodiment in FIG. **11**, the first communications device **1100** is illustrated as a mobile station or mobile terminal, such as a wireless handset, while the second communications device **1104** is illustrated as a base station, though not limited to such embodiment. The devices **1100**, **1104** may be any device having wireless communications capabilities. As shown, the base station **1104** includes a base transceiver subsystem (BTS) **1108** that includes the transmitter **200** and the receiver **700**. The BTS **1108** is connected to a base station controller (BSC) **1110**. Collectively, the BTS **1108** and the BSC **1110** are logically referred to as the "base station" **1104**. Multiple BTS **1108** sometimes share one BSC **1110**. The BSC **1110** manages resource allocation among the several BTSs. More generally, the terms "base station" and "access network" refer to any entity (or collection of entities) that communicates wirelessly with mobile stations for communications sessions (e.g., circuit-switched or packet-switched). The base station **1104** is coupled to the public switched telephone network (PSTN) or other data or switched network. This path may include additional elements such as a mobile switching center (MSC)(not shown) coupled to the BSC **1110**.

It may be advantageous to set forth definitions of certain words and phrases that may be used within this patent document: the terms "include" and "comprise," as well as derivatives thereof, mean inclusion without limitation; the term "or," is inclusive, meaning and/or; the phrases "associated with" and "associated therewith," as well as derivatives thereof, may mean to include, be included within, interconnect with, contain, be contained within, connect to or with, couple to or with, be communicable with, cooperate with, interleave, juxtapose, be proximate to, be bound to or with, have, have a property of, or the like; and if the term "controller" is utilized herein, it means any device, system or part thereof that controls at least one operation, such a device may be implemented in hardware, firmware or software, or some combination of at least two of the same. It should be noted that the functionality associated with any particular controller may be centralized or distributed, whether locally or remotely.

Although the present invention and its advantages have been described in the foregoing detailed description and illustrated in the accompanying drawings, it will be understood by those skilled in the art that the invention is not limited to the embodiment(s) disclosed but is capable of numerous rearrangements, substitutions and modifications without departing from the spirit and scope of the invention as defined by the appended claims.

What is claimed is:

1. A receiver, comprising:

a sample and hold circuit for receiving and separating a radio frequency (RF) signal into a plurality of parallel sampled analog signals;

an analog-to-digital (A/D) converter for receiving the plurality of parallel sampled analog signals and generating a plurality of parallel digital signals;

a demodulator for receiving and demodulating the parallel digital signals to generate a plurality of demodulated digital signals;

circuitry for receiving the plurality of demodulated digital signals and combining the plurality of demodulated digital signals into a digital signal; and

a digital downconverter for receiving the digital signal having a first rate and downconverting the digital signal to a baseband digital signal having a second rate.

2. The receiver in accordance with claim **1** further comprising:

a low noise amplifier for receiving the RF signal and generating an amplified RF signal; and

an analog bandpass filter for receiving the amplified RF signal and outputting a filtered RF signal for input to the sample and hold circuit.

3. The receiver in accordance with claim **1** further comprising:

a local oscillator for generating a local clocking signal for use by the sample and hold circuit in generating the plurality of parallel sampled analog signals for output.

4. The receiver in accordance with claim **1** wherein the digital signal comprises I and Q signals and the demodulator further functions to demodulate the plurality of modulated digital signals to generate the I and Q signals.

5. The receiver in accordance with claim **1** wherein the sample and hold circuit separates the RF signal into a number N of parallel sampled analog signals, and the circuitry further comprises:

a number N of subfilters for filtering each of the parallel digital signals.

6. The receiver in accordance with claim **1** wherein the sample and hold circuit separates the RF signals into a number a number N of parallel sampled analog signals, and where N is an integer multiple of four, and the circuitry further comprises:

a number N of subfilters for filtering a corresponding number N of parallel sampled digital signals.

7. The receiver in accordance with claim **6** wherein the circuitry comprises a polyphase filter having N subfilters with each subfilter having a set of coefficients, and wherein the coefficients of the subfilters correspond with a set of coefficients of the polyphase filter.

8. The receiver in accordance with claim **7** wherein the polyphase filter comprises a digital finite impulse response filter.

9. The receiver in accordance with claim **7** wherein the digital signal comprises I and Q signals, and wherein the

filter coefficients of the subfilters are modified such that subfilter coefficients implement the demodulator for generating the I and Q signals.

10. The receiver in accordance with claim **1** wherein the plurality of parallel digital signals generated by the A/D converter comprise a first sample having one or more binary bits.

11. The receiver in accordance with claim **1** wherein the A/D converter comprises a plurality of A/D sigma-delta converters.

12. A receiver, comprising:

means for receiving and separating a radio frequency (RF) signal into a plurality of parallel sampled analog signals;

means for receiving the plurality of parallel sampled analog signals and generating a plurality of parallel digital signals;

means for receiving and demodulating the parallel digital signals to generate a plurality of demodulated digital signals;

means for receiving the plurality of demodulated digital signals and combining the plurality of demodulated digital signals into a digital signal; and

means for receiving the digital signal having a first rate and downconverting the digital signal to a baseband digital signal having a second rate.

13. The receiver in accordance with claim **12** further comprising:

means for receiving the RF signal and generating an amplified RF signal; and

means for receiving the amplified RF signal and outputting a filtered RF signal for input to the means for receiving and separating the RF signal.

14. A method of downconverting a received analog signal, comprising:

receiving an RF signal;

sampling and separating the RF signal into a plurality of phased analog signals;

analog-to-digital converting the plurality of phased analog signals to generate a plurality of phased digital signals;

combining the plurality of phased digital signals into a digital signal having a first rate; and

downconverting the digital signal to a downconverted digital signal having a second rate.

15. The method in accordance with claim **14** further comprising:

generating a local clocking signal for use in sampling and separating the RF signal into the plurality of phased analog signals.

16. The method in accordance with claim **14** wherein the digital signal comprises I and Q signals and the I and Q signals are generated by demodulating the phased digital signals.

17. The method in accordance with claim **14** wherein a the RF signal is separated into a number N of phased analog signals, and the method further comprises:

filtering each of a number N of phased digital signals with a subfilter.

18. The method in accordance with claim **17** wherein N is an integer multiple of four, and each subfilter comprises a digital finite impulse response function.

19. A wireless communications device, comprising:

a receiver, comprising,

a sample and hold circuit for receiving and separating a radio frequency (RF) signal into a plurality of parallel sampled analog signals,

an analog-to-digital (A/D) converter for receiving the plurality of parallel sampled analog signals and generating a plurality of parallel digital signals,

a demodulator for receiving and demodulating the parallel digital signals to generate a plurality of demodulated digital signals,

circuitry for receiving the plurality of demodulated digital signals and combining the plurality of demodulated digital signals into a digital signal, and

a digital downconverter for receiving the digital signal having a first rate and downconverting the digital signal to a baseband digital signal having a second rate.

20. The wireless communications device in accordance with claim **19** wherein the device is a mobile terminal.

21. The wireless communications device in accordance with claim **19** wherein the device is a base station.

* * * * *