UNITED STATES PATENT AND TRADEMARK OFFICE

BEFORE THE PATENT TRIAL AND APPEAL BOARD

Samsung Electronics America, Inc.
Samsung Electronics Co., Ltd.
Petitioners

v.

Cobblestone Wireless LLC
Patent Owner

Case IPR2024-00606
Patent 7,924,802

DECLARATION OF KEVIN C. ALMEROTH, PH.D. IN SUPPORT OF PETITION FOR INTER PARTES REVIEW OF UNITED STATES PATENT NO. 7,924,802

TABLE OF CONTENTS

I. INTRODUCTION 1

II. BACKGROUND AND QUALIFICATIONS 2

III. MATERIALS REVIEWED 14

IV. LEGAL STANDARDS 16

A. Obviousness 16

B. Claim Construction 21

V. PERSON OF ORDINARY SKILL IN THE ART AND THE TIME OF THE ALLEGED INVENTION 22

VI. THE '802 PATENT 23

A. Background 23

B. Description of the '802 Patent's Specification 27

C. The '802 Patent's Prosecution History 30

D. Interpretation of the '347 Challenged Claims 31

VII. SUMMARY OF THE PRIOR ART 32

A. Rick (Ex. 1021) 32

B. Suzuki (Ex. 1004) 33

C. Fernandez (Ex. 1005) 35

D. Montojo (Ex. 1006) 37

VIII. GROUND 1: RICK RENDERS OBVIOUS CLAIM 1 38

A. Independent Claim 1 39

1[pre]: A method of transmitting information in a wireless communication channel comprising: 39

1[a]: transmitting first information across a first frequency range using a wireless transmitter, the first frequency range having a first center frequency, a first highest frequency, and a first lowest frequency; and; 39

1[b]: simultaneously transmitting second information across a second frequency range using the same wireless transmitter, the second frequency range having a second center frequency greater than the first center frequency, a second highest frequency, and a second lowest frequency. 41

IX. GROUND 2: SUZUKI RENDERS OBVIOUS CLAIMS 1-4, 6-8, 10, 13, 17, 21-22, and 24 43

A. Independent Claim 1 45

1[pre]: A method of transmitting information in a wireless communication channel comprising: 45

1[a]: transmitting first information across a first frequency range using a wireless transmitter, the first frequency range having a first center frequency, a first highest frequency, and a first lowest frequency; and; 45

1[b]: simultaneously transmitting second information across a second frequency range using the same wireless transmitter, the second frequency range having a second center frequency greater than the first center frequency, a second highest frequency, and a second lowest frequency. 47

B. Dependent Claim 2: "The method of claim 1 wherein frequency difference between the first center frequency and the second center frequency is greater than the sum of one-half the first frequency range and one-half the second frequency range." 51

C. Dependent Claim 3: "The method of claim 1 wherein the first and second information are transmitted using the same power amplifier in said wireless transmitter." 52

D. Dependent Claim 4: "The method of claim 3 wherein the bandwidth of said power amplifier is greater than the difference between the first lowest frequency and the second highest frequency." 54

E. Dependent Claim 6: "The method of claim 1 wherein the first information corresponds to a first wireless protocol and the second information corresponds to a second wireless protocol." 55

F. Dependent Claim 7: "The method of claim 1 wherein the first information and the second information are the same data transmitted across two different frequencies." 56

G. Dependent Claim 8: "The method of claim 1 wherein the first information and the second information are from the same data stream." 57

H. Independent Claim 10 57

10[pre]: A method of transmitting information in a wireless communication channel comprising: 59

10[a]: receiving a first digital signal comprising first data to be transmitted; 10[b]: receiving a second digital signal comprising second data to be transmitted; 59

10[c]: converting the first digital signal into a first analog signal using a first digital-to-analog converter, the first analog signal carrying the first data across a first frequency range; 61

10[d]: converting the second digital signal into a second analog signal using a second digital-to-analog converter, the second analog signal carrying the second data across a second frequency range; 61

10[e]: up-converting the first analog signal to a first RF center frequency to produce a first up-converted analog signal, wherein the first up-converted analog signal comprises a first up-converted frequency range from the first RF center frequency minus one-half the first frequency range to the first RF center frequency plus one-half the first frequency range; 64

10[f]: up-converting the second analog signal to a second RF center frequency greater than the first center RF frequency to produce a second up-converted analog signal, wherein the second up-converted analog signal comprises a second up-converted frequency range from the second RF center frequency minus one-half the second frequency range to the second RF center frequency plus one-half the second frequency range, and wherein a frequency difference between the first RF center frequency and the second RF center frequency is greater than the sum of one-half the first frequency range and one-half the second frequency range; 64

10[g]: combining the first up-converted analog signal and the second up-converted analog signal to produce a combined up-converted signal; 69

10[h]: amplifying the combined up-converted signal in a power amplifier resulting in an amplified combined up-converted signal; and 71

10[i]: transmitting the amplified combined up-converted signal on a first antenna, ... 73

10[j]: wherein the bandwidth of said power amplifier is greater than the difference between a lowest frequency in the first up-converted

frequency range and a highest frequency in the second up-converted frequency range. 73

I. Dependent Claim 13: "The method of claim 10 wherein the first digital signal is encoded using a first wireless protocol and the second digital signal is encoded using a second wireless protocol." 74

J. Independent Claim 17 74

17[pre]: A wireless communication system comprising: 74

17[a]: a baseband digital system for providing a first digital signal comprising a first data to be transmitted and a second digital signal comprising a second data to be transmitted; 74

17[b]: a first digital-to-analog converter for receiving the first digital signal and converting the first digital signal into a first analog signal, the first analog signal carrying the first data across a first frequency range; 75

17[c]: a second digital-to-analog converter for receiving the second digital signal and converting the second digital signal into a second analog signal, the second analog signal carrying the second data across a second frequency range; 75

17[d]: a first up-converter circuit having a first input coupled to receive the first analog signal and a second input coupled to receive a first modulation signal having a first RF frequency, wherein the first up-converter outputs a first up-converted analog signal comprising a first up-converted frequency range from the first RF frequency minus one-half the first frequency range to the first RF frequency plus one-half the first frequency range; 75

17[e]: a second up-converter circuit having a first input coupled to receive the second analog signal and a second input coupled to receive a second modulation signal having a second RF frequency, wherein the second up-converter outputs a second up-converted analog signal comprising a second up-converted frequency range from the second RF frequency minus one-half the second frequency range to the second RF frequency plus one-half the second frequency range, and wherein frequency difference between the first RF frequency and the second RF frequency is greater than the sum of one-half the first frequency range and one-half the second frequency range; and 75

17[f]: a power amplifier coupled to receive the first and second up-converted analog signals, wherein the bandwidth of the power amplifier is greater than the difference between a lowest frequency

in the first up-converted frequency range and a highest frequency in the second up-converted frequency range. 76

K. Dependent Claim 21: "The communication system of claim 17 wherein the first data of the first digital signal is encoded using a first wireless protocol and the first data of the second digital signal is encoded using a second wireless protocol." 76

L. Dependent Claim 22: "The communication system of claim 17 wherein the second data corresponds to the first data and wherein the power amplifier outputs a third up-converted signal comprising the up-converted first analog signal and the up-converted second analog signal." 76

X. GROUND 3: SUZUKI IN VIEW OF JALALI RENDER OBVIOUS CLAIMS 7-9, 22, AND 23 78

A. Rationale to Combine Suzuki with Jalali 78

B. Claims 7, 8, and 22 84

C. Claims 9 and 23 84

XI. GROUND 4: SUZUKI IN VIEW OF CHEN RENDER OBVIOUS CLAIMS 14 AND 24-25 89

A. Rationale to Combine Suzuki and Chen 89

B. Claim 14 93

14[pre]: The method of claim 10 wherein the second data is the same as the first data, the method further comprising: 94

14[a]: receiving the transmitted signal on a second antenna; 94

14[b]: amplifying the received signal in a low noise amplifier resulting in an amplified received up-converted signal, wherein the bandwidth of said low noise amplifier is greater than the difference between the lowest frequency in the first up-converted frequency range and the highest frequency in the second up-converted frequency range; 96

14[c]: down-converting the amplified received up-converted signal using a first down-converter and a signal corresponding to the first RF center frequency to produce a fourth analog signal corresponding to the first analog signal; and 98

14[d]: down-converting the amplified received up-converted analog signal using a second down-converter and a signal corresponding to the

second RF center frequency to produce a fifth analog signal corresponding to the second analog signal. 100

C. Claim 24 102

24[pre]: An electronic circuit comprising: 102

24[a]: a first down-converter circuit having a first input coupled to receive a first up-converted signal, a second input coupled to receive a first demodulation signal having a first RF frequency, and an output, wherein the first down-converter circuit outputs a first down-converted signal on the first down-converter output; 102

24[b]: a second down-converter circuit having a first input coupled to receive the first up-converted signal, a second input coupled to receive a second demodulation signal having a second RF frequency different than the first RF frequency, and an output, wherein the second down-converter outputs a second down-converted signal on the second down-converter output, wherein the first up-converted signal comprises a first signal modulated at the first RF frequency and a second signal modulated at the second RF frequency; and 103

24[c]: a filter having an input coupled to the output of the first down-converter and the output of the second down-converter, and in accordance therewith, the filter receives the first and second down-converted signals. 105

XII. GROUND 5: SUZUKI IN VIEW OF ETEMAD RENDER OBVIOUS CLAIMS 6, 13, AND 21 106

XIII. GROUND 6: FERNANDEZ IN VIEW OF MONTOJO RENDERS OBVIOUS CLAIMS 1-4, 6-8, 10, 13, 17, 21-22, AND 24 110

A. Rationale to Combine Fernandez and Montojo 110

B. Claim 1 116

1[pre]: A method of transmitting information in a wireless communication channel comprising: 116

1[a]: transmitting first information across a first frequency range using a wireless transmitter, the first frequency range having a first center frequency, a first highest frequency, and a first lowest frequency; and 116

1[b]: simultaneously transmitting second information across a second frequency range using the same wireless transmitter, the second frequency range having a second center frequency greater than the

first center frequency, a second highest frequency, and a second lowest frequency. 118

C. Claim 2: The method of claim 1 wherein frequency difference between the first center frequency and the second center frequency is greater than the sum of one-half the first frequency range and one-half the second frequency range. 120

D. Claim 3: The method of claim 1 wherein the first and second information are transmitted using the same power amplifier in said wireless transmitter. 121

E. Claim 4: The method of claim 3 wherein the bandwidth of said power amplifier is greater than the difference between the first lowest frequency and the second highest frequency. 124

F. Claim 6: The method of claim 1 wherein the first information corresponds to a first wireless protocol and the second information corresponds to a second wireless protocol. 124

G. Claim 7: The method of claim 1 wherein the first information and the second information are the same data transmitted across two different frequencies. 125

H. Claim 8: The method of claim 1 wherein the first information and the second information are from the same data stream. 125

I. Claim 10 126

10[pre]: A method of transmitting information in a wireless communication channel comprising: 126

10[a]: receiving a first digital signal comprising first data to be transmitted; 10[b]: receiving a second digital signal comprising second data to be transmitted; 126

10[c]: converting the first digital signal into a first analog signal using a first digital-to-analog converter, the first analog signal carrying the first data across a first frequency range; 127

10[d]: converting the second digital signal into a second analog signal using a second digital-to-analog converter, the second analog signal carrying the second data across a second frequency range; 127

10[e]: up-converting the first analog signal to a first RF center frequency to produce a first up-converted analog signal, wherein the first up-converted analog signal comprises a first up-converted frequency range from the first RF center frequency minus one-half the first

frequency range to the first RF center frequency plus one-half the first frequency range; 130

10[f]: up-converting the second analog signal to a second RF center frequency greater than the first center RF frequency to produce a second up-converted analog signal, wherein the second up-converted analog signal comprises a second up-converted frequency range from the second RF center frequency minus one-half the second frequency range to the second RF center frequency plus one-half the second frequency range, and wherein a frequency difference between the first RF center frequency and the second RF center frequency is greater than the sum of one-half the first frequency range and one-half the second frequency range; 130

10[g]: combining the first up-converted analog signal and the second up-converted analog signal to produce a combined up-converted signal; 134

10[h]: amplifying the combined up-converted signal in a power amplifier resulting in an amplified combined up-converted signal; and 135

10[i]: transmitting the amplified combined up-converted signal on a first antenna, ... 136

10[j]: wherein the bandwidth of said power amplifier is greater than the difference between a lowest frequency in the first up-converted frequency range and a highest frequency in the second up-converted frequency range. 137

J. Dependent Claim 13: "The method of claim 10 wherein the first digital signal is encoded using a first wireless protocol and the second digital signal is encoded using a second wireless protocol." 137

K. Independent Claim 17 138

17[pre]: A wireless communication system comprising: 138

17[a]: a baseband digital system for providing a first digital signal comprising a first data to be transmitted and a second digital signal comprising a second data to be transmitted; 138

17[b]: a first digital-to-analog converter for receiving the first digital signal and converting the first digital signal into a first analog signal, the first analog signal carrying the first data across a first frequency range; 138

17[c]: a second digital-to-analog converter for receiving the second digital signal and converting the second digital signal into a second analog

signal, the second analog signal carrying the second data across a second frequency range; 138

17[d]: a first up-converter circuit having a first input coupled to receive the first analog signal and a second input coupled to receive a first modulation signal having a first RF frequency, wherein the first up-converter outputs a first up-converted analog signal comprising a first up-converted frequency range from the first RF frequency minus one-half the first frequency range to the first RF frequency plus one-half the first frequency range; 139

17[e]: a second up-converter circuit having a first input coupled to receive the second analog signal and a second input coupled to receive a second modulation signal having a second RF frequency, wherein the second up-converter outputs a second up-converted analog signal comprising a second up-converted frequency range from the second RF frequency minus one-half the second frequency range to the second RF frequency plus one-half the second frequency range, and wherein frequency difference between the first RF frequency and the second RF frequency is greater than the sum of one-half the first frequency range and one-half the second frequency range; and 139

17[f]: a power amplifier coupled to receive the first and second up-converted analog signals, wherein the bandwidth of the power amplifier is greater than the difference between a lowest frequency in the first up-converted frequency range and a highest frequency in the second up-converted frequency range. 139

L. Dependent Claim 21: "The communication system of claim 17 wherein the first data of the first digital signal is encoded using a first wireless protocol and the first data of the second digital signal is encoded using a second wireless protocol." 139

M. Dependent Claim 22: "The communication system of claim 17 wherein the second data corresponds to the first data and wherein the power amplifier outputs a third up-converted signal comprising the up-converted first analog signal and the up-converted second analog signal." 140

XIV. GROUND 7: FERNANDEZ AND MONTOJO IN FURTHER VIEW OF JALALI RENDER OBVIOUS CLAIMS 7-9, 22, AND 23 141

A. Rationale to Combine Fernandez-Montojo with Jalali.....141

B. Claims 7, 8, and 22 143

C. Claims 9 and 23 143

XV. GROUND 8: FERNANDEZ AND MONTOJO IN FURTHER VIEW OF CHEN RENDER OBVIOUS CLAIMS 14 AND 24 143

XVI. GROUND 9: FERNANDEZ AND MONTOJO IN FURTHER VIEW OF ETEMAD RENDER OBVIOUS CLAIMS 6, 13, AND 21 144

XVII. CONCLUSION 145

I. INTRODUCTION

1. I have been retained by Samsung Electronics America, Inc. and Samsung Electronics Co., Ltd. ("Petitioners") as an independent expert consultant in this proceeding before the United States Patent and Trademark Office ("PTO") against Cobblestone Wireless, LLC ("Patent Owner") regarding U.S. Patent No. 7,924,802 ("the '802 patent") (Ex. 1001).[1] I have been asked to submit this Declaration on behalf of Petitioners.

2. I have been asked to consider whether certain references disclose or render obvious the features recited in claims 1-4, 6-10, 13, 14, 17, and 21-24 (collectively, the "Challenged Claims") of the '802 patent. My opinions are set forth below. Based on my experience and expertise, it is my opinion that the prior art renders obvious all limitations of the Challenged Claims, as I discuss in detail below.

3. I am being compensated at a rate of $850 per hour for my work in this proceeding. My compensation is in no way contingent on the nature of my findings, the presentation of my findings in testimony, or the outcome of this or any other proceeding. I have no other interest in this proceeding.

[1] Where appropriate, I refer to exhibits that I understand are to be attached to the petition for *Inter Partes* Review of the '802 patent.

4. All of my opinions stated in this Declaration are based on my own personal knowledge and professional judgment. I am over 18 years of age and, if I am called upon to do so, I would be competent to testify as to the matters set forth in this Declaration.

II. BACKGROUND AND QUALIFICATIONS

5. I am currently a Professor Emeritus in the Department of Computer Science at the University of California, Santa Barbara (UCSB). While at UCSB, I held faculty appointments and was a founding member of the Computer Engineering (CE) Program, Media Arts and Technology (MAT) Program, and the Technology Management Program (TMP). I also served as the Associate Director of the Center for Information Technology and Society (CITS) from 1999 to 2012. I have been a faculty member at UCSB since July 1997.

6. I hold three degrees from the Georgia Institute of Technology: (1) a Bachelor of Science degree in Information and Computer Science (with minors in Economics, Technical Communication, and American Literature) earned in June 1992; (2) a Master of Science degree in Computer Science (with specialization in Networking and Systems) earned in June 1994; and (3) a Doctor of Philosophy (Ph.D.) degree in Computer Science (Dissertation Title: Networking and System Support for the Efficient, Scalable Delivery of Services in Interactive Multimedia System, minor in Telecommunications Public Policy) earned in June 1997. During my education, I took

a wide variety of courses as demonstrated by my minor. My undergraduate degree also included a number of courses more typical of a degree in electrical engineering including digital logic, signal processing, and telecommunications theory.

7. One of the major concentrations of my research over the past 30+ years has been the delivery of multimedia content and data between computing devices, including through various network architectures. In my research, I have studied large-scale content delivery systems, and the use of servers located in a variety of geographic locations to provide scalable delivery to hundreds or thousands of users simultaneously. I have also studied smaller-scale content delivery systems in which content is exchanged between individual computers and portable devices. My work has emphasized the exchange of content more efficiently across computer networks, including the scalable delivery of content to many users, mobile computing, satellite networking, delivering content to mobile devices, and network support for data delivery in wireless networks.

8. In 1992, the initial focus of my research was on the provision of interactive functions (e.g., VCR-style functions like pause, rewind, and fast-forward) for near video-on-demand systems in cable systems; in particular, how to aggregate requests for movies at a cable head-end and then how to satisfy a multitude of requests using one audio/video stream broadcast to multiple receivers simultaneously. This research has continually evolved and resulted in the development of techniques to

scalably deliver on-demand content, including audio, video, web documents, and other types of data, through the Internet and over other types of networks, including over cable systems, broadband telephone lines, and satellite links.

9. An important component of my research has been investigating the challenges of communicating multimedia content, including video, between computers and across networks including the Internet. Although the early Internet was used mostly for text-based, non-real time applications, the interest in sharing multimedia content, such as video, quickly developed. Multimedia-based applications ranged from downloading content to a device to streaming multimedia content to be instantly used. One of the challenges was that multimedia content is typically larger than text-only content, but there are also opportunities to use different delivery techniques since multimedia content is more resilient to errors. I have worked on a variety of research problems and used a number of systems that were developed to deliver multimedia content to users. One content-delivery method I have researched is the one-to-many communication facility called "multicast," first deployed as the Multicast Backbone, a virtual overlay network supporting one-to-many communication. Multicast is one technique that can be used on the Internet to provide streaming media support for complex applications like video-on-demand, distance learning, distributed collaboration, distributed games, and large-scale wireless communication. The

delivery of media through multicast often involves using Internet infrastructure, devices and protocols, including protocols for routing and TCP/IP.

10. Starting in 1997, I worked on a project to integrate the streaming media capabilities of the Internet together with the interactivity of the web. I developed a project called the Interactive Multimedia Jukebox (IMJ). Users would visit a web page and select content to view. The content would then be scheduled on one of a number of channels, including delivery to students in Georgia Tech dorms delivered via the campus cable plant. The content of each channel was delivered using multicast communication.

11. In the IMJ, the number of channels varied depending on the capabilities of the server including the available bandwidth of its connection to the Internet. If one of the channels was idle, the requesting user would be able to watch their selection immediately. If all channels were streaming previously selected content, the user's selection would be queued on the channel with the shortest wait time. In the meantime, the user would see what content was currently playing on other channels, and because of the use of multicast, would be able to join one of the existing channels and watch the content at the point it was currently being transmitted.

12. The IMJ service combined the interactivity of the web with the streaming capabilities of the Internet to create a jukebox-like service. It supported true Video-on-Demand when capacity allowed, but scaled to any number of users based on

queuing requested programs. As part of the project, we obtained permission from Turner Broadcasting to transmit cartoons and other short-subject content. We also connected the IMJ into the Georgia Tech campus cable television network so that students in their dorms could use the web to request content and then view that content on one of the campus's public access channels.

13. More recently, I have also studied issues concerning how users choose content, especially when considering the price of that content. My research has examined how dynamic content pricing can be used to control system load. By raising prices when systems start to become overloaded (i.e., when all available resources are fully utilized) and reducing prices when system capacity is readily available, users' capacity to pay as well as their willingness can be used as factors in stabilizing the response time of a system. This capability is particularly useful in systems where content is downloaded or streamed on-demand to users.

14. As a parallel research theme, starting in 1997, I began researching issues related to wireless devices and sensors. In particular, I was interested in showing how to provide greater communication capability to "lightweight devices," i.e., small form-factor, resource-constrained (e.g., CPU, memory, networking, and power) devices. Starting in 1998, I published several papers on my work to develop a flexible, lightweight, battery-aware network protocol stack. The lightweight protocols we

envisioned were similar in nature to protocols like Bluetooth, Universal Plug and Play (UpnP) and Digital Living Network Alliance (DLNA).

15. From this initial work, I have made wireless networking—including ad hoc, mesh networks and wireless devices—one of the major themes of my research. My work in wireless networks spans the protocol stack from applications through to the encoding and exchange of data at the data link and physical layers.

16. At the application layer, even before the large-scale "app stores" were available, my research looked at building, installing, and using apps for a variety of purposes, from network monitoring to support for traditional computer-based applications (e.g., content retrieval) to new applications enabled by ubiquitous, mobile devices. For example, my research has looked at developing applications for virally exchanging and tracking "coupons" through "opportunistic contact" among mobile wireless devices (i.e., communication among devices moving into communication range with each other). In many of the courses I have taught there is a project component. Through these projects I have supervised numerous efforts to develop new "apps" for download and use across a variety of mobile platforms.

17. Toward the middle of the protocol stack, my research has also looked to build wireless infrastructure support to enable communication among a set of mobile devices unaided by any other kind of network infrastructure. These kinds of networks are useful either in challenged network environments (e.g., when a natural disaster has

destroyed existing infrastructure) or when suitable support for network communication never existed. The deployment of such networks (or even the use of traditional network support) are critical to support services like disaster relief, catastrophic event coordination, and emergency services deployment.

18. Yet another theme is monitoring wireless networks, in particular different variants of IEEE 802.11 compliant networks, to (1) understand the operation of the various protocols used in real-world deployments, (2) use these measurements to characterize use of the networks and identify protocol limitations and weaknesses, and (3) propose and evaluate solutions to these problems. I have successfully used monitoring techniques to study wireless data link layer protocol operation and to improve performance by enhancing the operation of such protocols. For wireless protocols, this research includes functions like network acquisition and channel bonding.

19. One theme in my wireless network research has been cross-layer solutions and innovations. As mentioned above, with greater wireless device use and network support, we envisioned new application paradigms and services, for example, when mobile devices come into contact with each other. Instead of relying on existing infrastructure to relay communication, the devices are able to discover each other and communicate directly. Other examples include discovering and using location information to enhance users' experiences. Network support and novel applications

span use a variety of network architectures supporting users on foot, in vehicles, and across varying terrains and environments. Finally, we studied how communication efficiency can be supported through intelligent handoffs as well as location and movement prediction.

20. Protecting networks, including their operation and content, has been an underlying theme of my research almost since the beginning of my research career. Starting in 2000, I have been involved in several projects that specifically address security, network protection, and firewalls. After significant background work, a team on which I was a member successfully submitted a $4.3M grant proPOSITAl to the Army Research Office (ARO) at the Department of Defense to propose and develop a high-speed intrusion detection system. Key aspects of the system included associating streams of packets and analyzing them for viruses and other malware. Once the grant was awarded, we spent several years developing and meeting the milestones of the project. A number of my students worked on related projects and published papers on topics ranging from intrusion detection to developing advanced techniques to be incorporated into firewalls. I have also used firewalls, including their associated malware detection features, in developing techniques for the classroom to ensure that students are not distracted by online content.

21. My recent work ties some of the various threads of my past research together. I have investigated content delivery in online social networks and proposed

reputation management systems in large-scale social networks and marketplaces. On the content delivery side, I have looked at issues of caching and cache placement, especially when content being shared and the cache has geographical relevance. We were able to show that effective caching strategies can greatly improve performance and reduce deployment costs. Our work on reputation systems showed that reputations have economic value, and as such, creates a motivation to manipulate reputations. In response, we developed a variety of solutions to protect the integrity of reputations in online social networks. The techniques we developed for content delivery and reputation management were particularly relevant in peer-to-peer communication and recommendations for downloadable "apps."

22. As an important component of my research program, I have been involved in the development of academic research into available technology in the market place. One aspect of this work is my involvement in the Internet Engineering Task Force (IETF). The IETF is a large and open international community of network designers, operators, vendors, and researchers concerned with the evolution of the Internet architecture and the smooth operation of the Internet. I have been involved in various IETF groups including many content delivery-related working groups like the Audio Video Transport (AVT) group, the MBone Deployment (MBONED) group, Source Specific Multicast (SSM) group, the Inter-Domain Multicast Routing (IDMR) group, the Reliable Multicast Transport (RMT) group, the Protocol Independent

Multicast (PIM) group, etc. I have also served as a member of the Multicast Directorate (MADDOGS), which oversaw the standardization of all things related to multicast in the IETF. Finally, I was the Chair of the Internet2 Multicast Working Group for seven years.

23. My involvement in the research community extends to leadership positions for several academic journals and conferences. I am the co-chair of the Steering Committee for the ACM Network and System Support for Digital Audio and Video (NOSSDAV) workshop and on the Steering Committees for the International Conference on Network Protocols (ICNP), ACM Sigcomm Workshop on Challenged Networks (CHANTS), and IEEE Global Internet (GI) Symposium. I have served or am serving on the Editorial Boards of IEEE/ACM Transactions on Networking, IEEE Transactions on Mobile Computing, IEEE Network, ACM Computers in Entertainment, AACE Journal of Interactive Learning Research (JILR), and ACM Computer Communications Review. I have co-chaired a number of conferences and workshops including the IEEE International Conference on Network Protocols (ICNP), IEEE Conference on Sensor, Mesh and Ad Hoc Communications and Networks (SECON), International Conference on Communication Systems and Networks (COMSNETS), IFIP/IEEE International Conference on Management of Multimedia Networks and Services (MMNS), the International Workshop On Wireless Network Measurement (WiNMee), ACM Sigcomm Workshop on Challenged Networks

(CHANTS), the Network Group Communication (NGC) workshop, and the Global Internet Symposium, and I have served on the program committees for numerous conferences.

24. Furthermore, in the courses I taught at UCSB, a significant portion of my curriculum covered aspects of the Internet and network communication including the physical and data link layers of the Open System Interconnect (OSI) protocol stack, and standardized protocols for communicating across a variety of physical media such as cable systems, telephone lines, wireless, and high-speed Local Area Networks (LANs). The courses I have taught also cover most major topics in Internet communication, including data communication, multimedia encoding, and mobile application design. My research and courses have covered a range of physical infrastructures for delivering content over networks, including cable, Integrated Services Digital Network (ISDN), Ethernet, Asynchronous Transfer Mode (ATM), fiber, and Digital Subscriber Line (DSL). For a complete list of courses I have taught, see my curriculum vitae (CV).

25. In addition, I co-founded a technology company called Santa Barbara Labs that was working under a sub-contract from the U.S. Air Force to develop very accurate emulation systems for the military's next generation internetwork. Santa Barbara Labs' focus was in developing an emulation platform to test the performance characteristics of the network architecture in the variety of environments in which it

was expected to operate, and, in particular, for network services including Ipv6, multicast, Quality of Service (QoS), satellite-based communication, and security. Applications for this emulation program included communication of a variety of multimedia-based services, including video conferencing and video-on-demand.

26. In addition to having co-founded a technology company myself, I have worked for, consulted with, and collaborated with companies for nearly 30 years. These companies range from well-established companies to start-ups and include IBM, Hitachi Telecom, Turner Broadcasting System (TBS), Bell South, Digital Fountain, RealNetworks, Intel Research, Cisco Systems, and Lockheed Martin.

27. Through my graduate education, leadership with CITS, involvement in TMP, role in the development of the Internet2 infrastructure, and consulting with ISPs, I have gained a strong understanding in the role of the Internet in our society and the challenges of deploying large-scale production networking infrastructure. CITS, since its inception, has looked at the role of the Internet in society, including how the evolution of technology have created communication opportunities and challenges, including, for example through disruptive technologies like P2P. TMP looks to focus on non-purely technical issues, including, for example, state-of-the-art business methods, strategies for successful technology commercialization, new venture creation, and best practices for fostering innovation. Through my industry collaborations and Internet2 work, I have developed significant experience in the

challenges of deploying, monitoring, managing, and scaling communication infrastructure to support evolving Internet services like streaming media, conferencing, content exchange, social networking, and e-commerce.

28. I am a Member of the Association of Computing Machinery (ACM) and a Fellow of the Institute of Electrical and Electronics Engineers (IEEE).

29. Additional details about my employment history, fields of expertise, courses taught, and publications are further included in my CV attached as Ex. 1004.

30. Based on my professional experience, I believe I am qualified to testify as an expert on matters related to the patent at issue.

III. MATERIALS REVIEWED

31. The opinions contained in this Declaration are based on the documents I reviewed, my professional judgment, as well as my education, experience, and knowledge.

32. In forming my opinions expressed in this Declaration, I also reviewed the following materials and information:

Exhibit No.	**Description**
1001	U.S. Patent No. 7,924,802
1002	Prosecution History of the ’802 patent
1004	U.S. Patent Pub. No. 2006/0276146A1 (“Suzuki”)

Exhibit No.	Description
1005	U.S. Patent Pub. No. 2009/0052556A1 ("Fernandez")
1006	U.S. Patent Pub. No. 2005/0135312A1 ("Montojo")
1007	U.S. Patent Pub. No. 2005/0249266A1 ("Brown")
1008	U.S. Patent No. 6,952,454 ("Jalali")
1009	U.S. Patent No. 6,359,868 ("Chen")
1010	U.S. Patent No. 7,136,430 ("Morris")
1011	U.S. Patent No. 7,460,615 ("Kunysz")
1012	U.S. Patent No. 7,133,697 ("Judd")
1013	*Cobblestone Wireless, LLC v. Samsung Electronics America, Inc. et al.*, 2:23-cv-00285-JRG-RSP (E.D. Tex.), Plaintiff Cobblestone Wireless, LLC's Preliminary Disclosure of Asserted Claims and Infringement Contentions, Exhibit A (served September 28, 2023)
1014	U.S. Patent No. 8,036,702 ("Etemad")

33. I also reviewed other materials I refer to in this Declaration in support of my opinions.

34. My opinions contained in this Declaration are based on the documents I reviewed and my knowledge and professional judgment. My opinions have also been guided by my appreciation of how a person of ordinary skill in the art would have

understood the state of the art, the prior art, and the claims and the specification of the ’802 patent at the time of the alleged invention.

IV. LEGAL STANDARDS

35. Petitioners’ attorneys have explained to me the legal standards that apply in this case. My understanding of those standards is described below. I am not an attorney, and I do not have formal training in the law regarding patents. I have used my understanding of the following legal principles set forth in this section in reaching my opinions.

36. I understand that, in this proceeding, Petitioners have the burden of proving that the challenged claims are invalid by a preponderance of the evidence.

A. Obviousness

37. I have been informed that a claim is invalid as obvious under 35 U.S.C. § 103 (pre-AIA) if the differences between the claimed subject matter and the prior art are such that the subject matter as a whole would have been obvious at the time of the invention to a person of ordinary skill in the art. I have been informed that the following matters are relevant to determining whether the claimed invention would have been obvious: (1) the scope and content of the prior art, (2) the difference or differences between the patent claim and the prior art, (3) the level of ordinary skill in the art at the time the invention of the patent, and (4) any secondary considerations or objective indicia of non-obviousness.

38. I have been informed that the combination of familiar elements according to known methods is likely to be obvious when it does no more than yield predictable results. When a claim simply arranges prior art elements with each performing the same function it had been known to perform and yields no more than one would expect from such an arrangement, then such a combination is obvious. When a patent claims a structure already known in the prior art altered by the mere substitution of one element for another known in the field, the combination is likely to be obvious unless the combination yields an unpredictable result.

39. I have been informed that when a work is available in one field of endeavor, design incentives and other market forces can prompt variations of it, either in the same field or a different one. If a person of ordinary skill in the art can implement a predictable variation, such a variation is likely unpatentable. For the same reason, if a technique has been used to improve one device, and one of ordinary skill in the art would recognize that it would improve similar devices in the same way, using the technique is obvious unless its actual application is beyond his or her skill. One question to consider is whether the improvement is more than predictably using prior art elements according to their established functions.

40. I have been informed that it may often be necessary, in a validity analysis, to consider whether there was an apparent reason to combine the known elements in the fashion claimed by the patent at issue. This can be accomplished by

looking to interrelated teachings of multiple patents or other publications or pieces of prior art; the effects of demands known to the design community or present in the marketplace; and the background knowledge possessed by one of ordinary skill in the art.

41. I have been informed that a validity analysis need not seek out precise teachings directed to the specific subject matter of the challenged claim; it is appropriate to take account of the inferences and creative steps that a person of ordinary skill in the art would employ. I have been informed that a person of ordinary skill in the art is a person of ordinary creativity, not an automaton.

42. I have been informed that a claim composed of several elements is not proved obvious merely by demonstrating that each element was, independently, known in the prior art. I have been informed that it can be important to identify a reason that would have prompted a person of ordinary skill in the art in the relevant field to combine the elements in the way the claimed new invention does. I am told that one way that subject matter can be proved obvious is by noting there existed at the time of the invention a known problem for which there was an obvious solution encompassed by the patent's claims. I have been informed that any need or problem known in the field of endeavor at the time of the claimed invention and addressed by the patent can provide a reason for combining the elements in the manner claimed.

43. I have been informed that one should not assume that a person of ordinary skill in the art attempting to solve a problem will be led only to those elements of prior art designed to solve the same problem. Instead, I have been informed that since familiar items may have obvious uses beyond their primary purposes, in many cases a person of ordinary skill in the art will be able to fit the teachings of multiple prior art references together like pieces of a puzzle.

44. I have been informed that, when there is a design need or market pressure to solve a problem and there are a finite number of identified, predictable solutions, persons of ordinary skill in the art have good reason to pursue the known options within their technical grasp. If this leads to the anticipated success, the product was likely not accomplished by innovation but by using ordinary skill and common sense. I have been informed that, in such an instance, the fact that the combination was obvious to try may show that the combination was obvious.

45. I have been informed that, when determining whether a claimed combination would have been obvious, the correct analysis is not whether a person of ordinary skill in the art, writing on a blank slate, would have chosen the particular combination of elements described in the claim. Instead, I have been informed that the correct analysis considers whether one of ordinary skill, facing the wide range of needs created by developments in the field of endeavor, would have seen a benefit to selecting the combination claimed.

46. I have been informed that, when determining whether a claimed invention is obvious, any "secondary considerations" of non-obviousness identified by the patentee should also be considered. These secondary considerations can include:

- commercial success of the invention, causally related to the invention itself rather than to companion factors, such as advertising or attractive packaging;
- the invention taught away from the technical direction followed by those skilled in the art;
- a long-felt but unsatisfied need for the invention while the needed implementing arts and elements had long been available;
- the invention achieves results unexpected to those skilled in the art;
- copying of the invention by competitors as distinguished from their independent development
- unsuccessful attempts by those skilled in the art to make the invention;

- acquiescence by the industry to the patent's validity by honoring the patent through taking licenses or not infringing the patent, or both; and

- skepticism, disbelief in or incredulity by those skilled in the art that the patentee's approach worked.

47. I have been informed that, for the above information to impact the obviousness of a patent claim, there must be a nexus between the alleged secondary considerations and the claims. In addition, I have been informed that the burden of introducing evidence of secondary considerations generally is on the Patent Owner. If the Patent Owner or its expert should assert secondary considerations of non-obviousness, I reserve the right to provide a Declaration addressing assertions of non-obviousness due to secondary considerations.

B. Claim Construction

48. I have been informed that claim terms are typically given their plain and ordinary meanings, as would have been understood by a person of ordinary skill in the art at the time of the earliest alleged priority date. I have further been informed that when considering the meaning of any terms in the Challenged Claims of the '802 patent, I should apply the plain and ordinary meaning of those terms. I have further

been informed that in considering the meaning of the claims, one must consider the language of the claims, the specification, and the prosecution history of record.

49. I have been informed that in general, a preamble limits the invention if it recites essential structure or steps, or if it is necessary to give life, meaning, and vitality to the claim. I have further been informed that a preamble is not limiting where a patentee defines a structurally complete invention in the claim body and uses the preamble only to state a purpose or intended use for the invention. I have further been informed that dependence on a particular disputed preamble phrase for antecedent basis may limit claim scope because it indicates a reliance on both the preamble and claim body to define the claimed invention. I have further been informed that clear reliance on the preamble during prosecution to distinguish the claimed invention from the prior art transforms the preamble into a claim limitation because such reliance indicates use of the preamble to define, in part, the claimed invention.

V. PERSON OF ORDINARY SKILL IN THE ART AND THE TIME OF THE ALLEGED INVENTION

50. I have been asked to assume that the ’802 patent is entitled to its earliest alleged priority date of June 23, 2008. S*ee* Ex. 1001. Beyond this assumption, I have not undertaken an analysis to determine the earliest priority date to which the ’802 patent is entitled.

51. Based on the materials and information I have reviewed and based on my experience in the technical areas relevant to the ’802 patent, a person of ordinary

skill in the art at the time of the alleged invention of the ’802 patent would have had at least a bachelor’s degree in electrical engineering, computer engineering, computer science, physics, or the equivalent, and at least two years of experience working in the field. Relevant working experience would include experience with cellular telecommunications and networking, radio-access network architectures, protocols, and signal propagation in wireless networks. More education can supplement practical experience and vice versa. Based on my knowledge and experience, including as discussed above in Section II, I was a person of ordinary skill in the art at the time of the alleged invention of the ’802 patent and can provide opinions regarding the knowledge of a person of ordinary skill in the art as of that time. My opinions herein are, where appropriate, based on my understandings as to a person of ordinary skill in the art at that time. I myself had these capabilities at the time of the alleged invention of the ’802 patent.

VI. THE ’802 PATENT

A. Background

52. Below, I provide a brief background summary of the technology at issue.

53. The technology at issue is directed to wireless transmission of signals. Much of the below cites to a textbook that is often used in college courses focused on telecommunication and signal processing systems. The textbook is called “Modern

Digital and Analog Communication Systems" by B.P. Lathi and it was published in 1998.

54. When transmitting information over a wireless telecommunication system, information is first converted into an electromagnetic signal is known as a ***baseband signal***. Ex. 1023, 10. Baseband signals operate at low frequencies. For example, for telephony, the audio baseband is 0 to 3.5 KHz. *Id.*, 85. For digital data, baseband depends on the "R_b pulses for second," and is 0 to R_b Hz. *Id.* Because "baseband signals have sizable power at low frequencies," they are "suitable for communications over a pair of wires, coaxial cables, or optical fibers." *Id.*

55. However, wirelessly transmitting a baseband signal is usually not practical because the low frequencies means the signal has a very long wavelength. Lower frequencies, of course, have lower wave lengths. For example, AM radio, which operates at 600 kHz to 1500 kHz, has wavelengths of 200 to 500 meters. By contrast, FM radio, which operates at 100 MHz, has a wavelength of about 3 meters. Baseband signals are therefore very long.

56. One problem with long wavelengths is that it requires very large antennas to transmit. Signals with long wavelengths may also have trouble entering smaller areas—for example, AM radio does not work in tunnels because the waves are too large. Finally, baseband frequencies are much more susceptible to noise,

interference, and distortion from the environment—such as audible noise and electricity.

57. Moreover, it is desirable to be able to use "the vast spectrum of frequencies available because of technological advantages." *Id.*, 85.

58. As a result, baseband signals are usually converted to much higher frequencies (*e.g.*, radio frequencies) using a process called ***modulation***. *Id.*, 15. Modulation is the process of taking a carrier wave (also called a carrier frequency) at the desired frequency and modulating one of its parameters (*e.g.*, amplitude, frequency, or phase) so that it carries the information being transmitted. *Id.* For example, in amplitude modulation, the carrier frequency is a high-frequency wave (for example, 600 kHz), and its amplitude is modified according to the baseband signal (which may have a center of 10 kHz), resulting in an amplitude-modulated wave (figure (c)). *Id.*, 15-16. The below image is from the Lathi textbook.

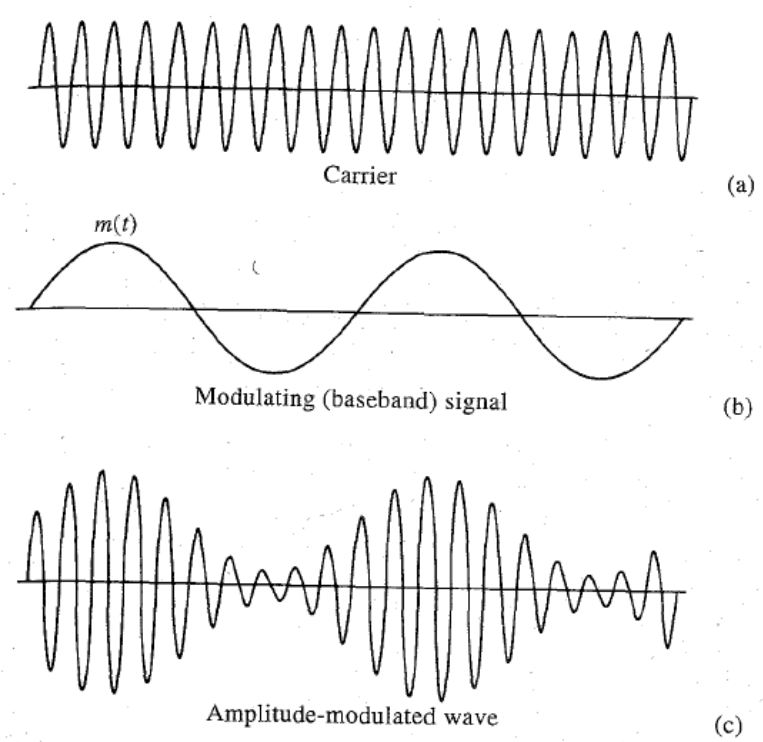

59. Another issue with baseband signals is that they cannot be transmitted simultaneously because they "would interfere with each other." *Id.*, 16. But solving this problem using modulation has long been known. Thus, in the introductory chapter of Lathi, it recognizes a technique called ***frequency-division multiplexing*** which can be used to solve the problem of interference when transmitting multiple signals. *Id.* In FDM, different carrier frequencies are modulated with different signals, and as long as "the various carrier frequencies are chosen sufficiently far apart in frequency," they will not interfere with each other. *Id.* This allows for "transmitting several signals ***simultaneously***." *Id.* It was known in the art that such a signal is called a multi-carrier signal.

60. There are numerous examples beyond Lathi that describe frequency multiplexing. Ex. 1015. Even in the 1870s, researchers for telegraphy investigated frequency multiplexing methods. Ex. 1016. In the 1910s, several patents were issued for frequency multiplexing in wired telecommunications such as the telephone and telegraph. Exs. 1017-1019. In 1957, Collins Radio developed the Kineplex system which employed frequency multiplexing techniques for radio. Ex. 1020. And orthogonal frequency-division multiplexing ("OFDM") (claimed in one of the Challenged Claims) was first introduced in 1966 and is used in numerous wireless standards, including WiFi, WiMAX, and LTE. *Id.*

B. Description of the '802 Patent's Specification

61. U.S. Pat. No. 7,924,802 (the "'802 patent") is directed to "transmit[ting] signals simultaneously over a communication channel at different RF center frequencies … us[ing] a single power amplifier and antenna." Ex. 1001, Abstract. The claims are directed to (1) a signal containing multiple carriers using non-overlapping RF frequency centers and ranges, (2) a transmitter which uses DACs, filters, up-converters, synthesizers, an amplifier, and an antenna to transmit such a signal, and (3) a receiver which receives such a signal. Figure 2, below, illustrates the relevant concepts from the '802 Patent.

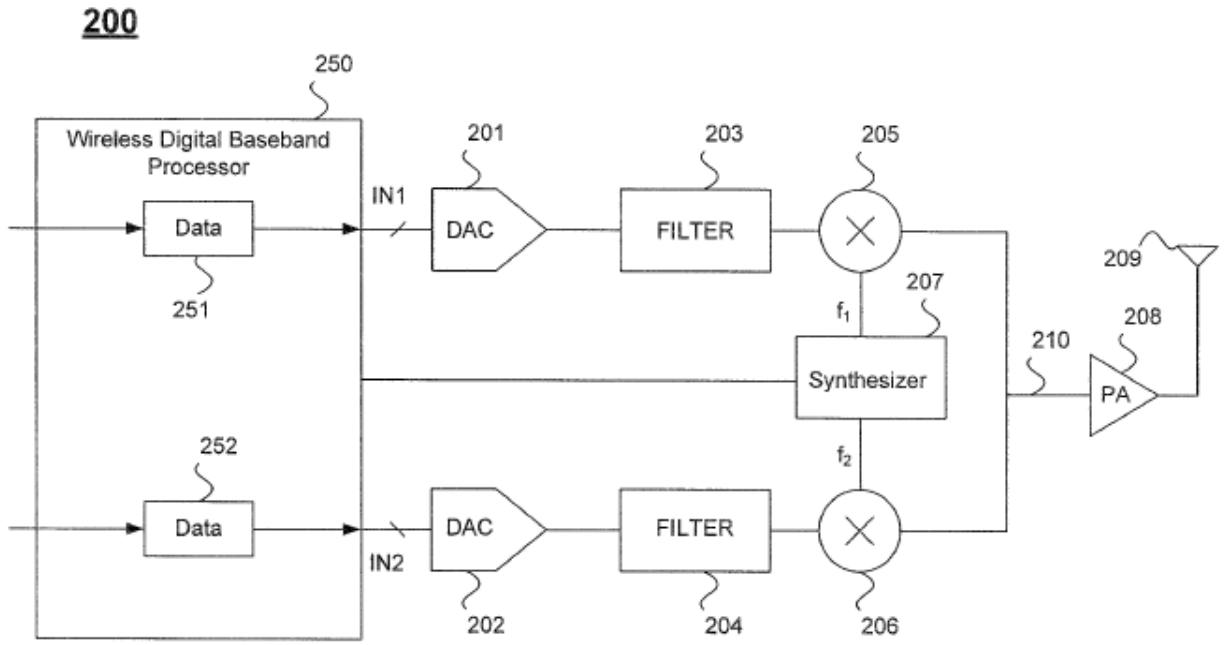

Fig. 2

62. The ’802 patent describes a prior art system, such as depicted in Figure 1, as generating a transmission from a single input signal, converted to analog using a DAC, then up-converted (*i.e.* modulated) to a transmission signal centered around “***one*** center frequency.” Ex. 1001, 1:17-32. Such a transmission is “limited by the bandwidth of the transmitter around the center frequency” which “limits the amount of data that can be transmitted.” *Id.*, 1:37-40. In other words, the ’802 patent’s description of the prior art is limited to single-carrier transmissions.

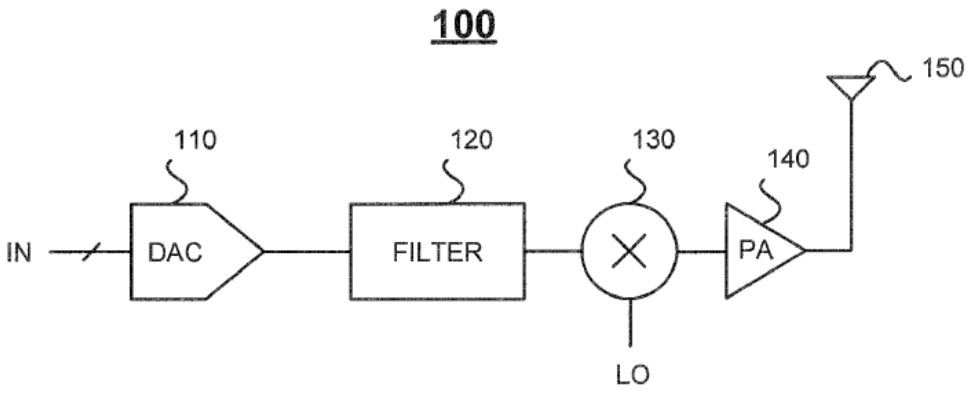

Fig. 1
(prior art)

63. Thus, the system depicted in Figure 2 is actually just two of these prior art circuits run in parallel and then combined. The '802 patent describes that its purported invention generates a signal as shown in Figure 3, where one input is centered around frequency f1 and another is centered around frequency f2. *Id.*, 6:22-34.

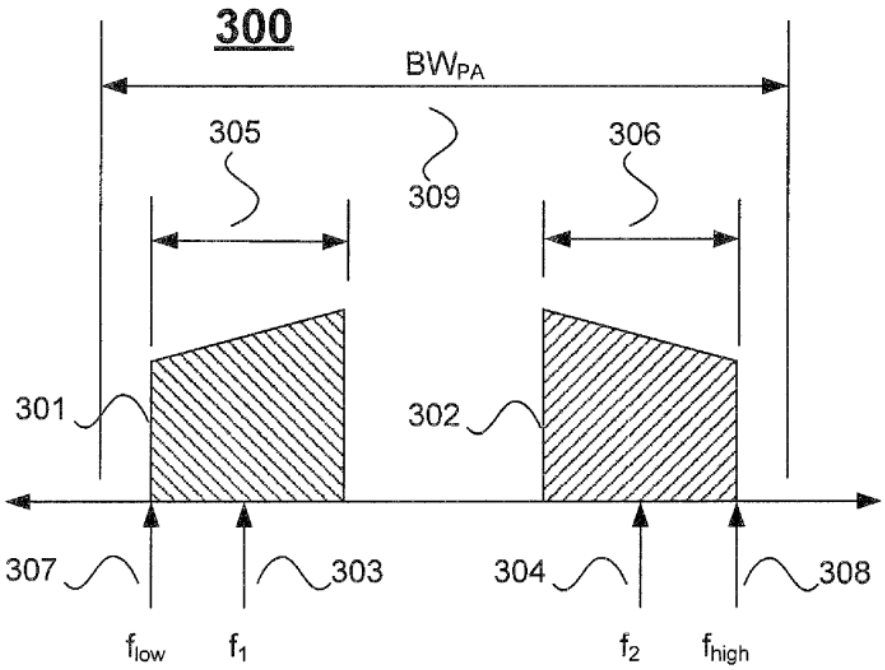

Fig. 3

64. Such a signal, however, was no different than that described by the many references that disclose frequency multiplexing, including Rick, Suzuki, and Fernandez. For example, the below signal is from Suzuki.

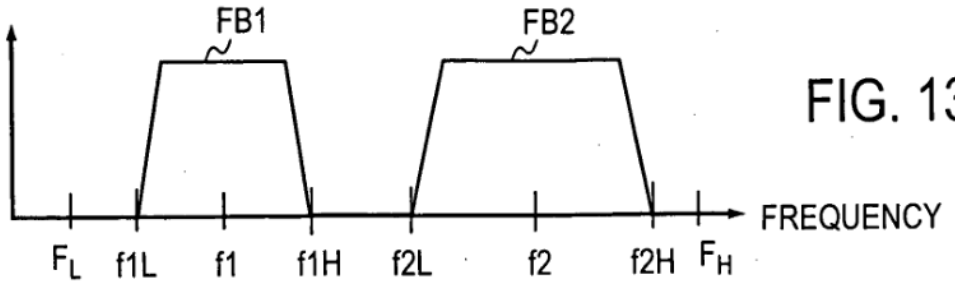

FIG. 13A

C. The ’802 Patent’s Prosecution History

65. I have reviewed the prosecution history of the ’802 patent. The ’802 patent does not claim priority to any earlier application.

66. During prosecution of the ’802 patent, the examiner did not issue any rejections. In the notice of allowance, the examiner stated that “[t]he closest prior art of record, Hinson (us 2003/0016701) and Zhang (US 2008/0225761) … fail[] to disclose inventive method steps of “simultaneously transmitting second information across a second frequency range using same wireless transmitter, [said] frequency range having a second center frequency greater than the first center frequency, a second highest frequency, and a second lowest frequency.” Ex. 1002, 19. However, as I explain in fuller detail below, both Suzuki and Fernandez clearly disclose multiple signals in a single simultaneous transmission at different, non-overlapping frequency ranges.

67. The examiner also stated that Hinson and Zhang do not disclose “up-converting” the first and second signals to frequency ranges that do not overlap—which is again disclosed by Suzuki and Fernandez. Ex. 1002, 19-20. Finally, the examiner stated Hinson and Zhang do not disclose a downconverter at the receiving device, but as disclosed below, Chen discloses such a receiver. *Id.*

D. Interpretation of the ’347 Challenged Claims

68. For the purposes of my analysis in this IPR proceeding, I understand that the words of a claim are given their plain meaning that those words would have had to a POSITA at the time of the alleged invention. I also understand that the structure of the claims, the specification, and the prosecution history may also be used

to better construe a claim insofar as the plain meaning of the claims cannot be understood. Moreover, I understand that even treaties and dictionaries may be used, albeit under limited circumstances, to determine the meaning attributed by a POSITA to a claim term at the time of filing. Furthermore, I understand that a Patent Owner's own apparent interpretation of certain terms in related proceedings can be considered to determine the meaning of patent claims in an IPR proceeding.

69. I have followed this approach in my analysis, and I have applied the plain and ordinary meaning of those terms as the would have been interpreted by a POSITA at the time the invention was made (not today). For purposes of my analysis here, I have used the June 23, 2008 filing date of the '802 patent as the date of the invention.

VII. SUMMARY OF THE PRIOR ART

A. Rick (Ex. 1021)

70. U.S. Patent No. 8,693,525 ("Rick") was filed on July 12, 2007 and published January 17, 2008. Rick is entitled "Multi-carrier transmitter for wireless communication."

71. Rick discloses "[a] multi-carrier transmitter capable of transmitting on one or multiple frequency channels ***simultaneously***" and that the transmitter "may be used for various wireless communication systems." Ex. 1021, 1:48-50, 2:38-39. Rick discloses transmission of multiple "CDMA signals" which are transmitted on multiple

"CDMA channels," with each channel having a different frequency "spaced sufficiently far apart to reduce inter-channel interference," as shown below in Figure 1. *Id.*, 3:19-26.

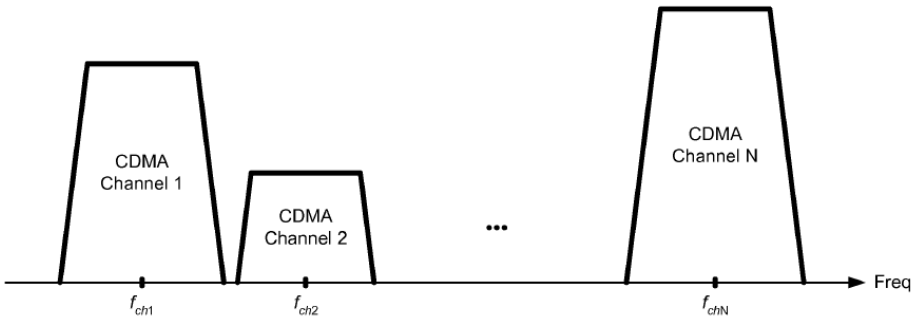

FIG. 1

72. Thus, Rick discloses the very same multi-carrier signal transmitting multiple pieces of data on the same signal as claimed by the '802 patent.

B. Suzuki (Ex. 1004)

73. U.S. Patent Application Publication No. 2006/0276146 ("Suzuki") was filed on June 1, 2006 and published on December 7, 2006. Suzuki is entitled "Multi-Band Lookup Table Type Predistorter."

74. Suzuki teaches a system for simultaneously transmitting multiple inputs on a single transmission where each input is transmitted on its own "frequency band," *i.e.* a multi-carrier signal. Ex. 1004, Abstract, ¶1 ("[T]he present invention relates to a multi-band lookup table type predistorter for collectively amplifying high frequency signals of a plurality of bands."). Suzuki specifically teaches a system for predistorting such multi-carrier signals, where each input is individually extracted and

predistorted using DAC's, down-converters, up-converters, filters, and amplifiers. This is illustrated in, for example, Figure 6.

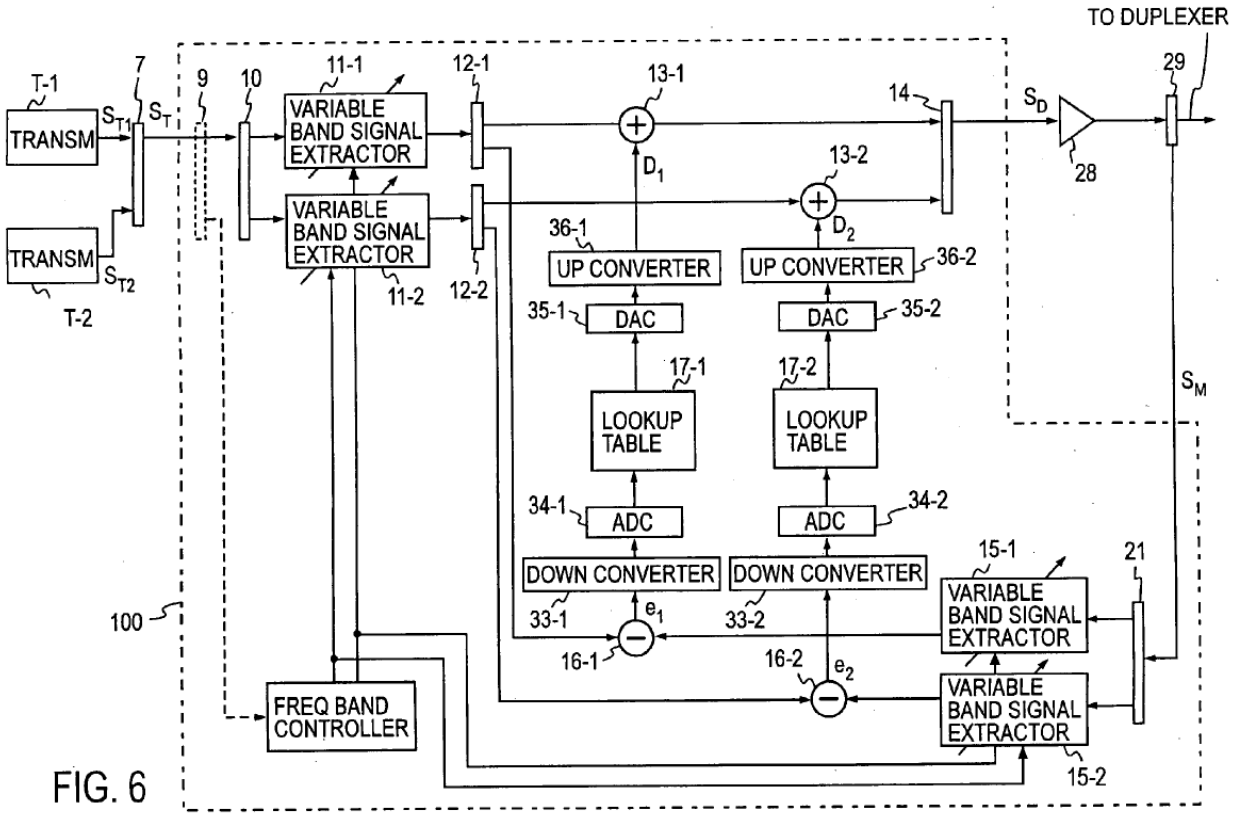

FIG. 6

75. As shown above in Figure 6, Suzuki teaches a predistorter whereby multiple signals are converted from high frequency signals to base band signals by down-converters and then converted to digital signals at the analog-to-digital converters. The distortion compensation data read out from the lookup tables are then converted to analog signals at the DACs, further converted into high frequency signals at the up-converters and provided to the "adders" where they are summed together. The output from the predistorter is power amplified at the power amplifier and the output is transmitted via an antenna. Figure 13A provides an example of such a

transmission and shows multiple inputs where each is transmitted in its own frequency band, much like in the ’802 patent.

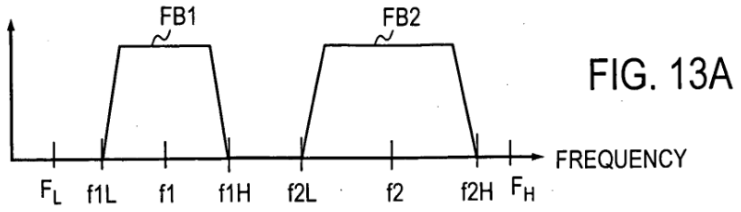

FIG. 13A

C. Fernandez (Ex. 1005)

76. U.S. Patent Application No. 2009/0052556 (“Fernandez”) was filed on August 23, 2007 and published on February 26, 2009. Fernandez is entitled “Frequency Interleaving method for Wideband Signal Generation.”

77. As shown in Figure 2A, Fernandez teaches a system that transmits a multi-carrier signal by receiving multiple inputs and, for each input, using DACs, upconverters, amplifiers, and filters in parallel to generate for each input a signal with its own frequency center (shown as f_{cf} to f_{c5} in Figure 2A). Ex. 1005, ¶8. These signals are summed and then transmitted simultaneously on an antenna.

FIG. 2A

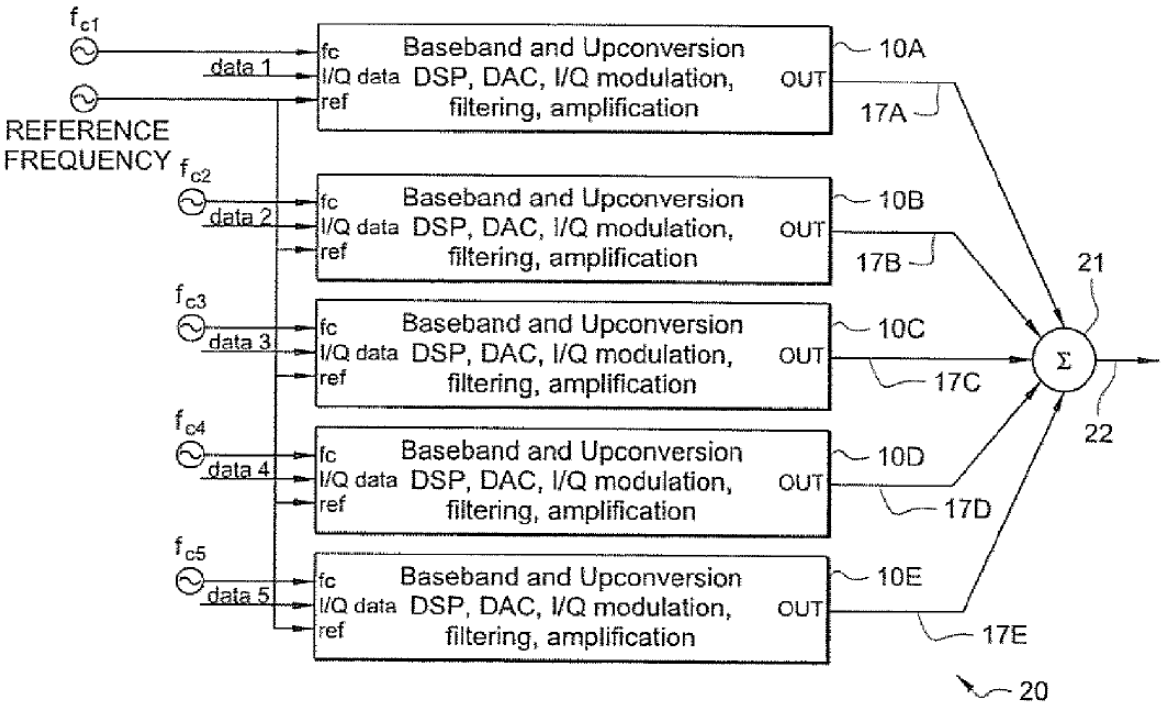

78. The "multi-carrier wireless signal" generated by this system is depicted in Figure 2B. *Id.*, ¶8. Much like in the '802 patent, this signal "contains the plurality of summed signals 17A-17E with holes 23A, 23B, 23C, and 23D interspersed between," *i.e.* each signal has a non-overlapping frequency range. *Id.*

FIG. 2B

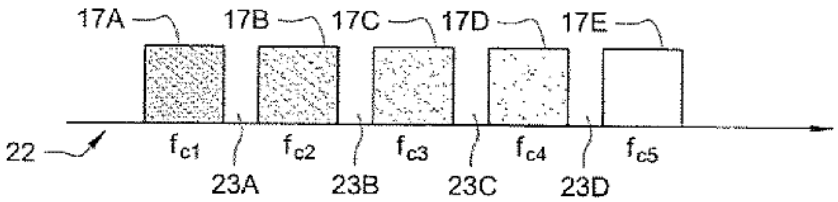

D. Montojo (Ex. 1006)

79. U.S. Patent Application Publication No. 2005/0135312 ("Montojo") was filed on December 17, 2003 and published on June 23, 2005. Montojo is entitled "Apparatus and method For Prioritized Apportionment of Transmission Power in a Multi-Carrier Terminal."

80. Montojo also teaches a general application of prioritized apportionment of transmission power among a plurality of carriers served by a single power amplifier. For example, in Figure 5, below, a transmitter 500 includes at least one multi-carrier transmission section 501 in which a plurality of carriers (carrier 1, carrier 2, . . . , carrier n) are summed by a signal combiner 502 which sums the carriers to produce a multi-carrier signal that is input to a power amplifier (PA) 504. The power amplifier 504 amplifies the multi-carrier signal, producing an amplified multi-carrier signal on signal path 505 which connects the power amplifier 504 to an antenna 506."

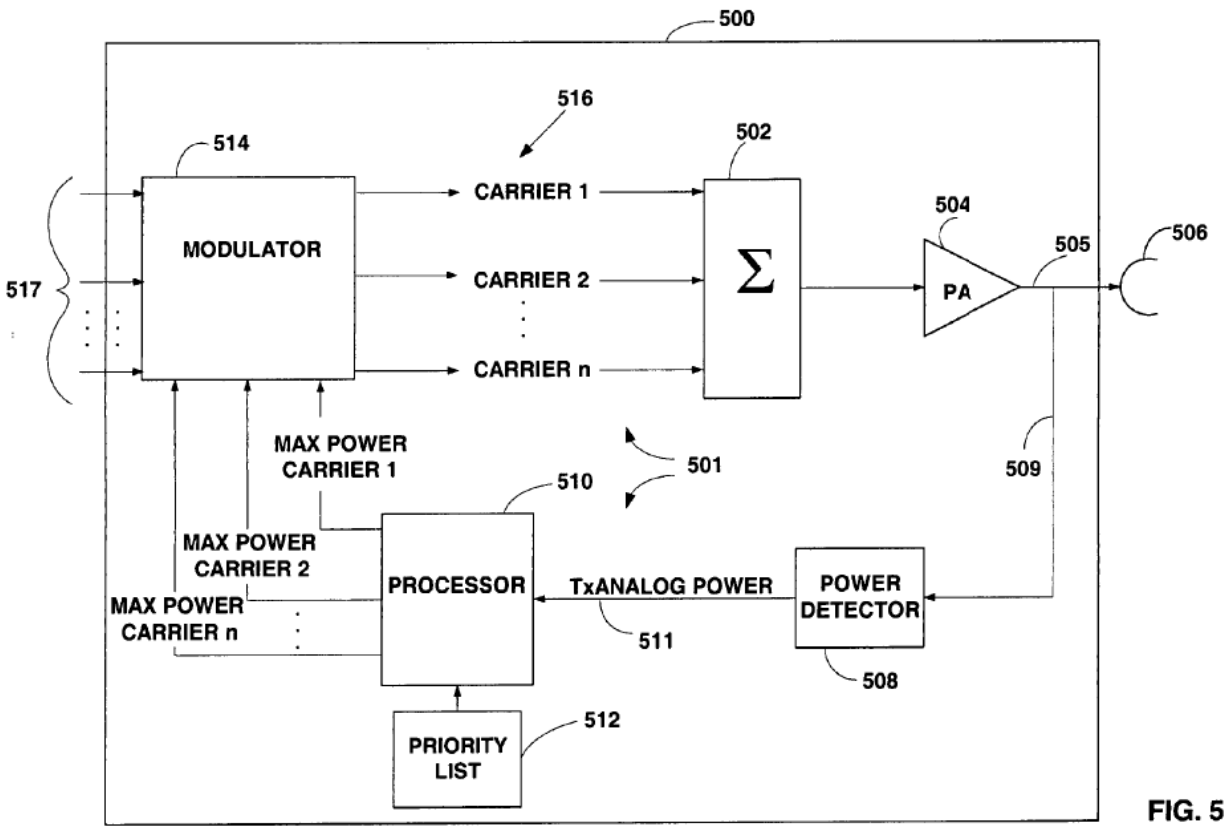

FIG. 5

VIII. GROUND 1: RICK RENDERS OBVIOUS CLAIM 1

81. Ground 1 relies on Rick and only addresses Claim 1. Rick is an example of how Claim 1 attempts to claim what was well-known in the art at the time: a multi-carrier signal. It discloses the simultaneous transmission of multiple carriers on a single signal transmitted by a single antenna. Rick discloses each and every limitation of the claim. However, I have presented this ground as an obviousness ground to address potential arguments Patent Owner may present.

A. Independent Claim 1

1[pre]: A method of transmitting information in a wireless communication channel comprising:

82. In my opinion, Rick discloses this limitation. For example, Rick discloses "[a] multi-carrier transmitter capable of transmitting on one or multiple frequency channels simultaneously" and that the transmitter "may be used for various wireless communication systems." Ex. 1021, 1:48-50, 2:38-39.

1[a]: transmitting first information across a first frequency range using a wireless transmitter, the first frequency range having a first center frequency, a first highest frequency, and a first lowest frequency; and;

83. In my opinion, Rick discloses this limitation.

84. With respect to ***"transmitting first information across a first frequency range using a wireless transmitter,"*** Rick discloses "transmission of N CDMA signals," each of which "may carry any type of data for any service." Ex. 1021, 3:19, 3:35-36 (disclosing that N>1). The data for one of the CDMA signals is a ***first information***. These CDMA signals are transmitted on CDMA channels, the first of which has a ***first frequency range*** centered at f_{ch1} as I've shown below in the annotated Figure 1. *Id.*, 3:21-22. The signal is "transmitted via ***an antenna***," *i.e.* ***a wireless transmitter***. *Id.*, 4:50-51.

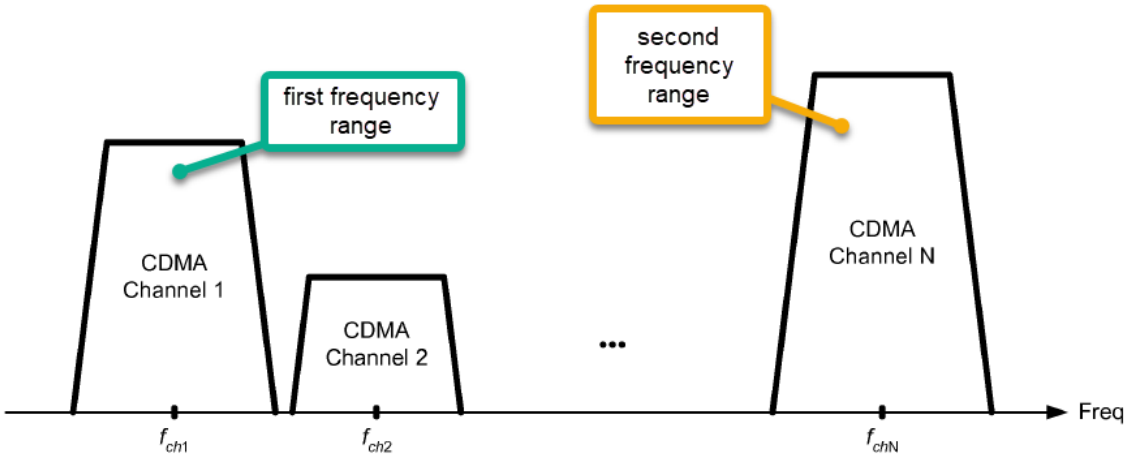

FIG. 1

85. With respect to ***"the first frequency range having a first center frequency, a first highest frequency, and a first lowest frequency,"*** Rick describes (and depicts in Figure 1) that the ***first frequency range*** has a ***first center frequency*** of f_{ch1}. *See* Ex. 1021, 3:21-22 ("CDMA channel 1 has a carrier frequency of f_{ch1}"). A POSITA would understand that "carrier frequency" refers to the center frequency of the carrier channel. Ex. 1023, 86. This is because when the carrier frequency is modulated (whether using frequency or amplitude modulation) to carry the desired information, this results in a frequency range that is centered on the frequency channel with sum and difference frequencies on the side. Moreover, Rick teaches that the CDMA signal is upconverted to the carrier frequency, and a POSITA would understand that such upconversion involves raising the frequency center of a signal to a higher frequency center. *Id.*, 4:11-16. Consistent with this understanding, Figure 1 depicts f_{ch1} in the middle of CDMA Channel 1.

86. As I've annotated below, Figure 1 also depicts a ***first highest frequency*** and ***first lowest frequency***, with the total range being "1.228 MHz wide." Ex. 1021, 3:16-17.

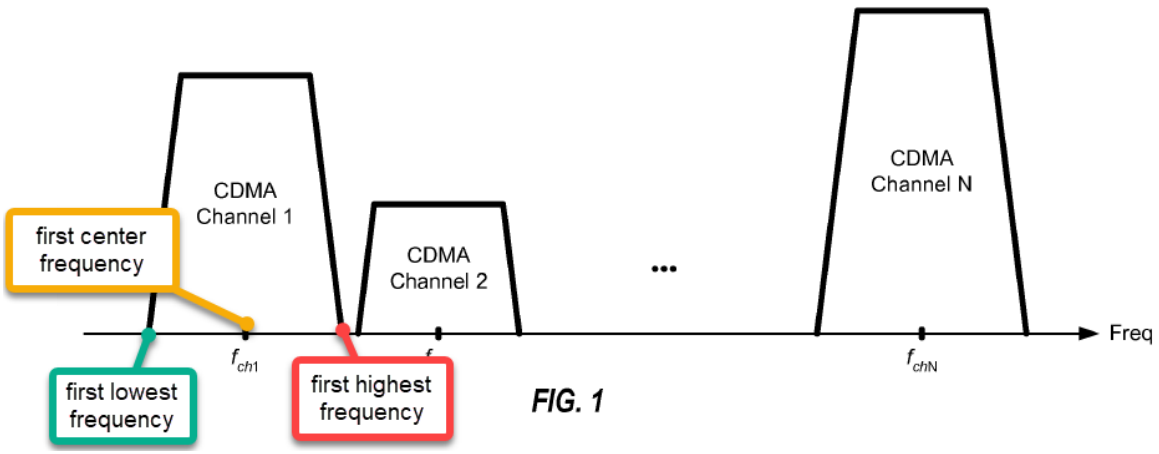

87. To the extent Patent Owner argues that Rick does not disclose that f_{ch1} is a center frequency, it would have been obvious that it is the center frequency because, as discussed above, a POSITA would understand that "carrier frequency" refers to the center frequency of the channel. It is the carrier frequency that is modulated, and the modulation results in a signal centering on the carrier frequency.

1[b]: simultaneously transmitting second information across a second frequency range using the same wireless transmitter, the second frequency range having a second center frequency greater than the first center frequency, a second highest frequency, and a second lowest frequency.

88. In my opinion, Rick discloses this limitation.

89. With respect to ***"simultaneously transmitting second information across a second frequency range using the same wireless transmitter,"*** the "second

information" is shown in Rick in Fig. 2, as I've annotated below—it is either the CDMA data on channel 2, or the CDMA data on channel N:

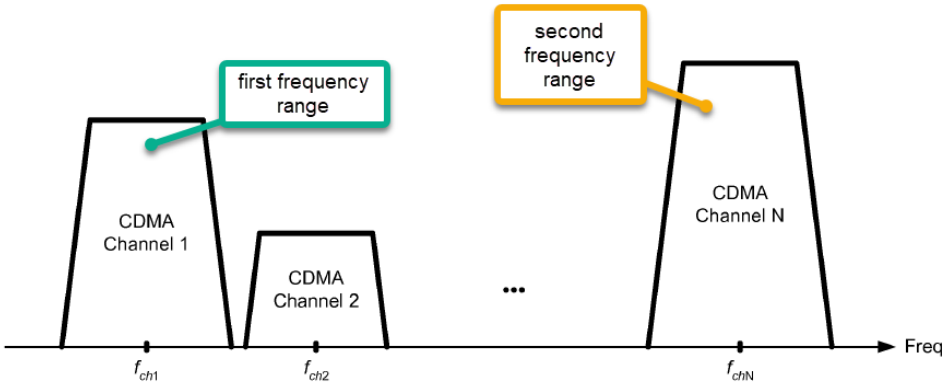

FIG. 1

90. Rick discloses transmitting these "multiple CDMA signals ***simultaneously***." Ex. 1021, 3:13-14. Since one of the signals carries the ***first information***, the data for another one of the signals is the ***second information***. This signal is carried on either CDMA channel 2 or "CDMA channel N" which "has a carrier frequency of f_{chN}," *i.e.* ***a second frequency range*** centered at f_{chN}, as depicted in Figure 1. *Id.*, 3:23-24. This signal carrying both the first and second information is "transmitted via ***an antenna***," *i.e.* ***the same wireless transmitter***. *Id.*, 4:50-51.

91. With respect to ***"the second frequency range having a second center frequency greater than the first center frequency, a second highest frequency, and a second lowest frequency,"*** Fig. 1 is illustrated in the frequency domain, that is, frequency increases along the x-axis. As I've shown with my annotations in Figure 1, the ***second frequency range*** has a ***second center frequency*** of f_{chN}. As I just explained,

a POSITA would understand or at least consider it obvious that "carrier frequency" refers to the center frequency of Channel N, and this understanding is reflected in Figure 1. Figure 1 depicts f_{chN} as ***greater*** than f_{ch1} (***first center frequency***), because it is further to the right on the x-axis, and a POSITA would understand that to mean it is a higher frequency. It also depicts a ***second highest frequency*** and ***second lowest frequency*** with the total range being "1.228 MHz wide." Ex. 1021, 3:16-17.

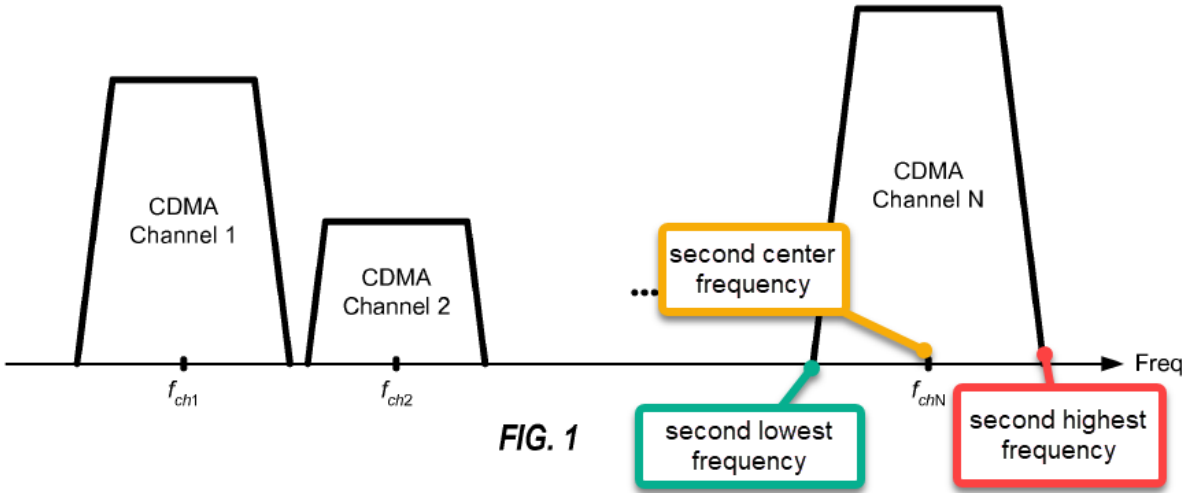

FIG. 1

IX. GROUND 2: SUZUKI RENDERS OBVIOUS CLAIMS 1-4, 6-8, 10, 13, 17, 21-22, AND 24

92. I provide a brief summary of Suzuki first.

93. Suzuki discloses various predistorter embodiments that individually predistort each carrier signal in a multi-carrier transmission system before combining them to be simultaneously transmitted. In these embodiments, the predistorter input is "transmitting signal S_T," which includes "dual frequency bands of transmitting signals." Ex. 1004, ¶¶44-45 (explaining "the predistorter can be adapted for signals in

three or more frequency bands"). Figure 13A is a depiction of information from signal S_T simultaneously transmitted over two frequency bands FB1 and FB2. *Id.*, ¶79.

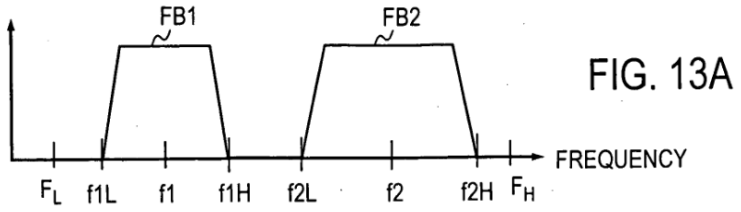

FIG. 13A

94. As I've annotated below, the predistroter embodiments first extract the signals from each of the frequency bands (FB1 and FB2), predistorts each signal, combines the signals, then simultaneously transmits them.

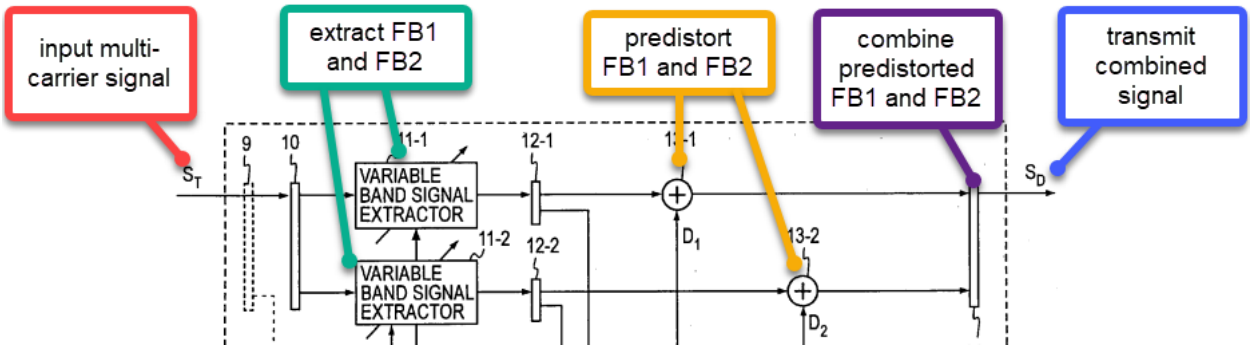

95. While Figure 13A depicts the input signal S_T, it also depicts the combined output signal. In other words, the predistorter's output signal has the same frequency bands centered on the same frequency centers as the input signal S_T. This is known because the above steps of extraction, predistortion and recombining would not alter the frequency bands of the input signal. But more explicitly, Suzuki teaches that the output signal is copied as signal S_M, which is sent to signal extractors 15-1 and 15-2. These signal extractors "extract signals in the ***same frequency bands*** as those of

the variable band signal extractors 11-1 and 11-2, respectively." *Id.*, ¶46. Signal extractors 11-1 and 11-2 extract signals from the input signal S_T. *Id.*, ¶45. Thus, since signals are extracted from the "same frequency bands" as the input signal S_T and the output signal S_M, Figure 13A depicts both.

A. Independent Claim 1

1[pre]: A method of transmitting information in a wireless communication channel comprising:

96. In my opinion, to the extent the preamble is limiting, Suzuki discloses this limitation. Suzuki discloses a predistorter for existing "multi-band ***wireless system***" which transmit a "multi-band transmission" making "use of one or more … frequency bands." Ex. 1004, ¶¶6-10.

1[a]: transmitting first information across a first frequency range using a wireless transmitter, the first frequency range having a first center frequency, a first highest frequency, and a first lowest frequency; and;

97. In my opinion, Suzuki discloses this limitation.

98. With respect to ***"transmitting first information across a first frequency range using a wireless transmitter,"*** Suzuki discloses that Figure 13A (which as explained above depicts the predistorter output) depicts a transmission of FB1, which is a transmission of ***first information across a first frequency range***. Below, I have provided annotations to Figure 13A.

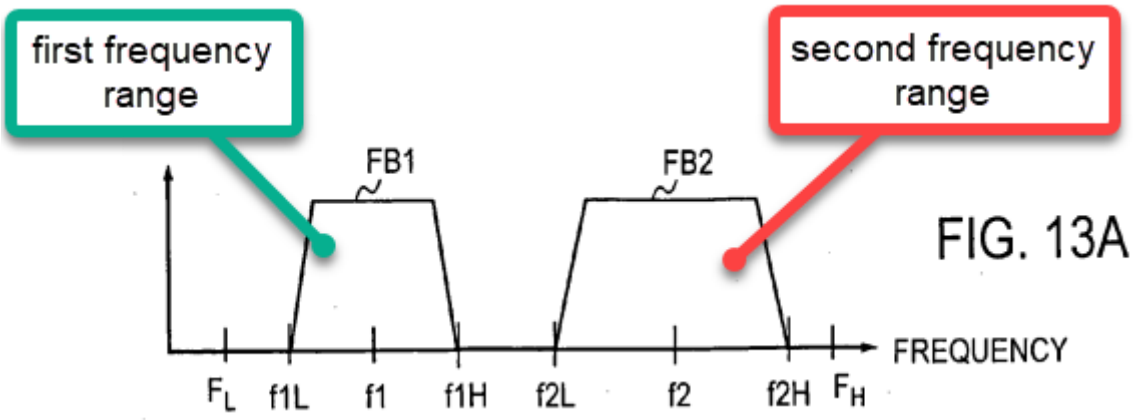

99. Suzuki states that the predistorter output is formed by combining (at combiner 14) the two predistorted signals from adders 13-1 and 13-2. Ex. 1004, ¶45. Thus, one of the predistorted signals is the ***first information***.

100. According to Suzuki, one of the predistorted signals from adders 13-1 and 13-2 (***first information***) is transmitted in one of the frequency bands in Figure 13A. Ex. 1004, ¶47 ("The adders 13-1 and 13-2 add the distortion compensation data … to signals to ***be transmitted in frequency bands*** … [T]he distortion compensation is carried out for ***each frequency band***."). Figure 13A depicts "signals in dual frequency bands FB1 and FB2 whose center frequencies are f1 and f2." Ex. 1004, ¶79. For FB1, "[t]he lower limit frequency of the frequency band FB1 is f1L and the upper limit frequency is f1H." *Id.* Thus, the signal FB1 contains the ***first information*** and has a ***first frequency range*** of f1L to f1H, with a frequency center of f1.

101. In my opinion, Suzuki teaches that the predistorter output signal is transmitted using a ***wireless transmitter***. For example, Suzuki teaches that the output

of the predistorter is "converted into a radio signal … and transmitted" by an "antenna," *i.e.* ***a wireless transmitter***. *Id.*, ¶¶48, 63.

102. With respect to "***the first frequency range having a first center frequency, a first highest frequency, and a first lowest frequency***," it is my opinion that Suzuki meets the limitation. Ex. 1004, at 0082. As shown in Figure 13A above, Suzuki discloses that f1H is the ***first highest frequency*** and that FB1 (the claimed "first frequency range") represents the ***first frequency range***. F1L is the ***first lowest frequency***, and f1 is the ***first center frequency***.

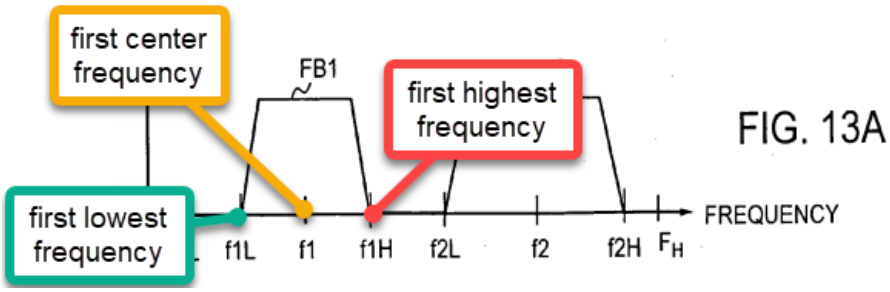

1[b]: simultaneously transmitting second information across a second frequency range using the same wireless transmitter, the second frequency range having a second center frequency greater than the first center frequency, a second highest frequency, and a second lowest frequency.

103. In my opinion, Suzuki discloses this limitation.

104. With respect to "***simultaneously transmitting second information across a second frequency range using the same wireless transmitter***," Suzuki discloses that Figure 13A depicts a transmission of FB2, which is a transmission of ***second information across a second frequency range***. As already discussed above,

Suzuki discloses that the predistorter output signal is depicted in Figure 13A, which depicts FB2, a ***second frequency range***, as I've annotated below. *See* Ex. 1004, ¶79 ("The transmitting signal … is assumed to include signals in dual frequency bands FB1 and FB2 whose center frequencies are f1 and f2 as shown in FIG. 13A").

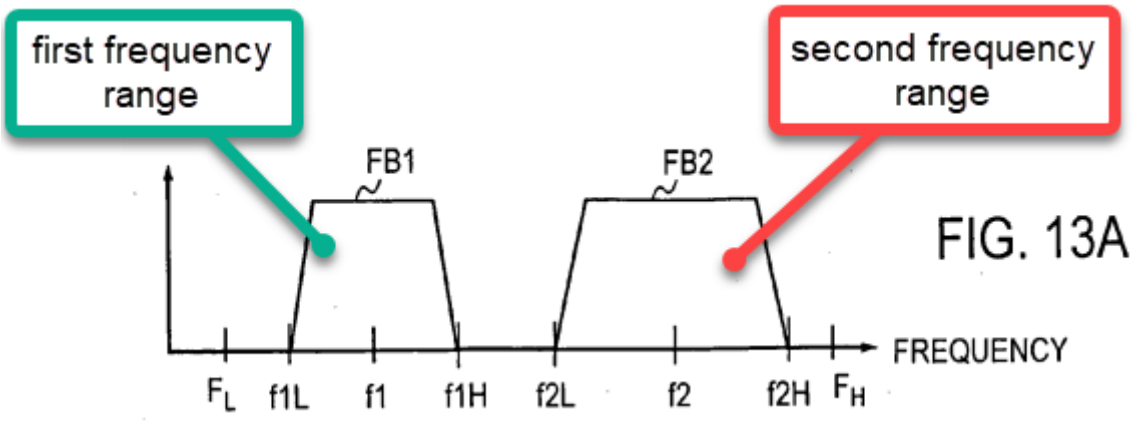

105. Also as I discussed above, the predistorter output is formed by combining two predistorted signals from adders 13-1 and 13-2, one of which is the first information and the other of which is the ***second information***. Ex. 1004, ¶45. Each predistorted signal is transmitted on a frequency band in Figure 13A—since the first information is transmitted in FB1, the ***second information*** is transmitted in FB2. Ex. 1004, ¶47; Fig. 13A. For FB2, "[t]he lower limit frequency of the frequency band FB2 is f2L and the upper limit frequency is f2H." *Id.*, ¶79. Thus, the signal FB2 contains the ***second information*** and has a ***second frequency range*** of f2L to f2H, with a frequency center of f2.

106. With respect to "***simultaneously transmitting … using the same wireless transmitter***," the '802 patent describes that one embodiment within the scope

of this claim involves "transmit[ting] the digital data simultaneously as an electromagnetic signal using two different carrier frequencies." Ex. 1001, 11:18-20. Those in the field would also understand "simultaneously transmitting" information to include transmitting the information on a single signal over a single antenna. For example, Rick describes a "multi-carrier transmitter [that] can transmit one or multiple CDMA signals ***simultaneously***," with each signal being sent on a CDMA channel with a different frequency (*e.g.*, frequencies f_{ch1}, f_{ch2}, f_{chN} in Figure 1), and the signal being "transmitted via ***an*** antenna." Ex. 1021, 3:13-24, 4:50-51, Fig. 1.

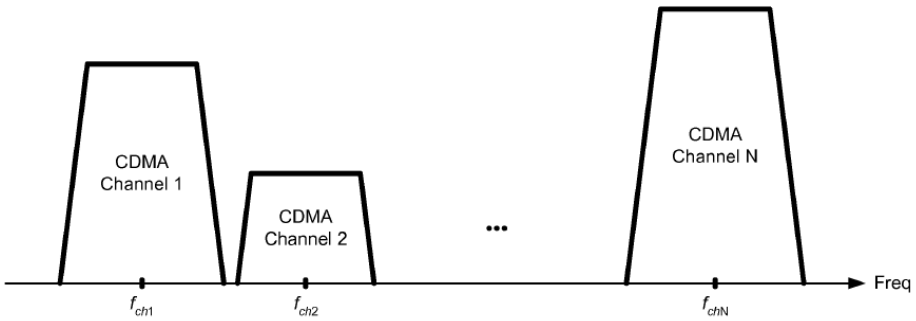

FIG. 1

107. While I do not opine on the definition of the full scope of the "simultaneously transmitting" or that it can even be defined, similar to the '802 patent, Suzuki discloses that the second information is transmitted on the same signal, but different frequency band, as the first information and thus is ***simultaneously transmitted*** with the first information using the ***same wireless transmitter***.

108. The predistorter's output signal is formed by combining, using combiner 14, the predistorted signals from adders 13-1 and 13-2 into "***the*** combined

signal" with two frequency bands as depicted in Figure 13A. Ex. 1004, ¶45. This signal is "converted into ***a*** radio signal … and transmitted" by "***an antenna***," *i.e.* the predistorter's output signal is a single signal. *Id.*, ¶¶48, 63. This single signal is transmitted by a single ***wireless transmitter*** (a single antenna), and thus ***simultaneously transmits*** the first and second information within that single signal using the ***same wireless transmitter***. *See also id.*, ¶7 ("[A] system for transmitting both signals in 800 MHz and in 1.5 GHz band ***simultaneously***.").

109. With respect to "***the second frequency range having a second center frequency greater than the first center frequency, a second highest frequency, and a second lowest frequency***," as shown above, a POSITA would know that FB2 (as annotated in green) is the second frequency range, that f2H is a second highest frequency, and f2L to be the second lowest frequency. Ex. 1004, ¶79.

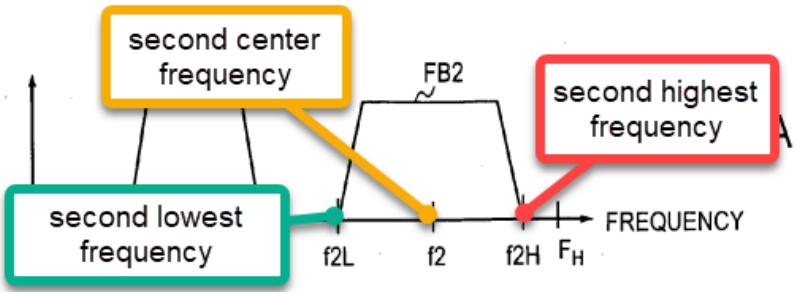

110. Figure 13A shows that f2 has a higher frequency than the first center frequency f1, because they are depicted with a frequency x-axis that a POSITA would understand to be increasing frequency.

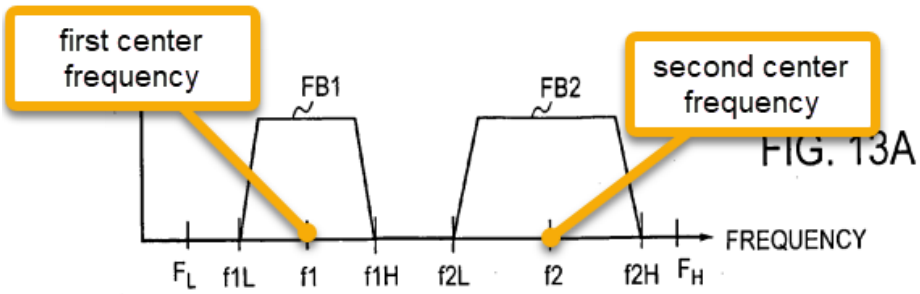

B. Dependent Claim 2: "The method of claim 1 wherein frequency difference between the first center frequency and the second center frequency is greater than the sum of one-half the first frequency range and one-half the second frequency range."

111. A POSITA would understand that this limitation requires that the first and second frequency ranges are not overlapping. "One-half the first frequency range" is the distance from first center frequency to first highest frequency. "One-half the second frequency range" is the distance from second center frequency to second lowest frequency. For the sum of these two halves to be less than the difference between the first and second center frequencies, the first highest frequency must be less than the second lowest frequency, which means the frequency ranges do not overlap.

112. Suzuki's FB1 and FB2 are non-overlapping, as shown in Figure 13A. The below annotated Figure 13A illustrates how this limitation is met. The length of the red arrow clearly is greater than the length of the green and orange arrows combined.

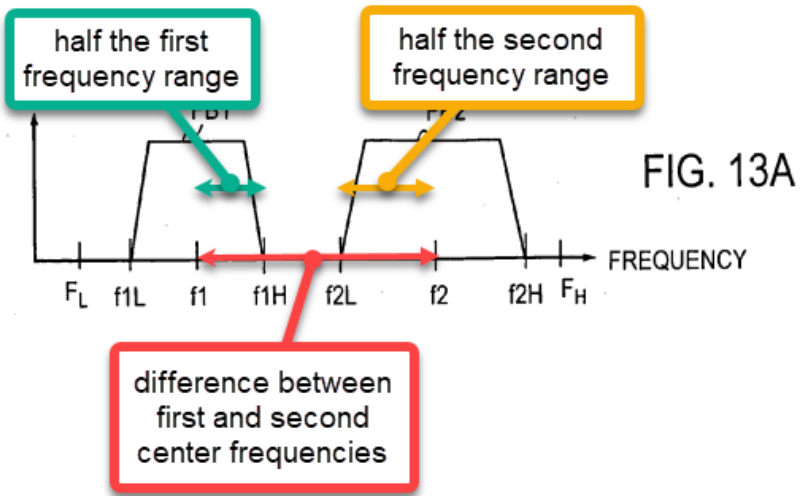

113. Suzuki teaches that "[t]he center frequency of each frequency band is obtained by f1=(f1L+f1H)/2 and f2=(f2L+f2H)/2," which means f1 and f2 are the true centers of their respective frequency ranges. Ex. 1004, ¶80.

C. Dependent Claim 3: "The method of claim 1 wherein the first and second information are transmitted using the same power amplifier in said wireless transmitter."

114. In my opinion, Suzuki meets this limitation. Suzuki teaches that the predistorted signals from "adders 13-1 and 13-2" (*i.e.* ***first and second information***) are combined and amplified by a ***single power amplifier***. Ex. 1004, ¶48 (the "combined output" is "converted into a radio signal, and then amplified by ***a*** power amplifier and transmitted"). A POSITA would understand that this power amplifier is ***in said wireless transmitter*** because it amplifies the signal that is then "transmitted." *Id.*; *see also id.*, ¶95 ("[T]he signals in each frequency band can be amplified by ***a common power amplifier***"). The power amplifier is also illustrated in various embodiments of Suzuki as being a single power amplifier—*e.g.*, power amplifier 28 in

Figure 6—that amplifies predistorter output signal S_D, which includes the first and second information.

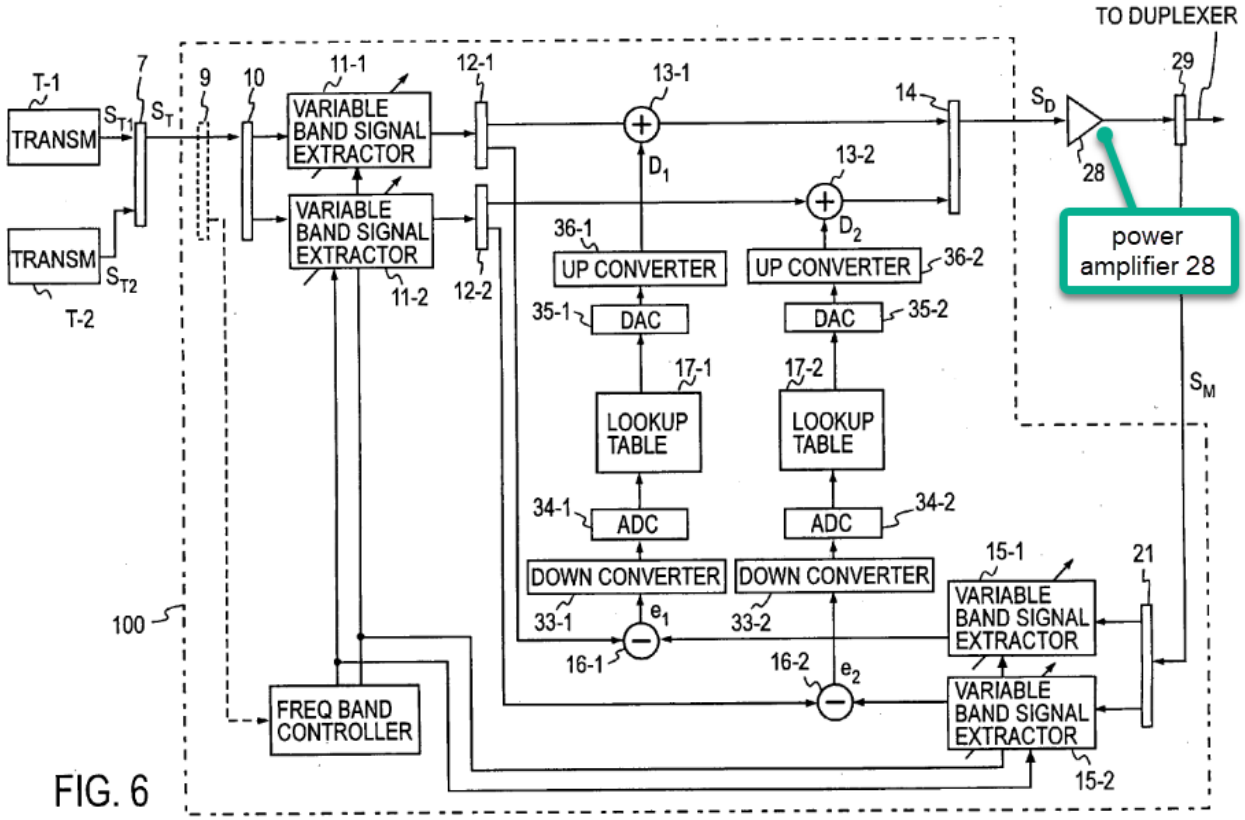

FIG. 6

115. A POSITA would have also considered it obvious that the power amplifier is ***in the wireless transmitter***. A POSITA would understand that a wireless transmitter constitutes both a power amplifier and an antenna. It was common knowledge that a power amplifier converts low-power RF signals into a higher-power signal in order to drive the transmitting antenna. It was common for wireless transmitters to contain both a power amplifier and an antenna for transmission given the necessity to amplify the signal in order to drive the antenna. A POSITA would

have reasonably expected a wireless transmitter containing a power amplifier and an antenna to succeed because such devices were common in the market.

D. Dependent Claim 4: "The method of claim 3 wherein the bandwidth of said power amplifier is greater than the difference between the first lowest frequency and the second highest frequency."

116. In my opinion, Suzuki discloses this limitation.

117. Figure 13A depicts that the bandwidth of output signal S_D exceeds the difference between f1L and f2H (blue line). In particular, a POSITA would understand that the bandwidth of a signal is the width of the total frequency band, which in this case is the difference between F_H and F_L in Figure 13A (red line). *See* Ex. 1004, ¶79.

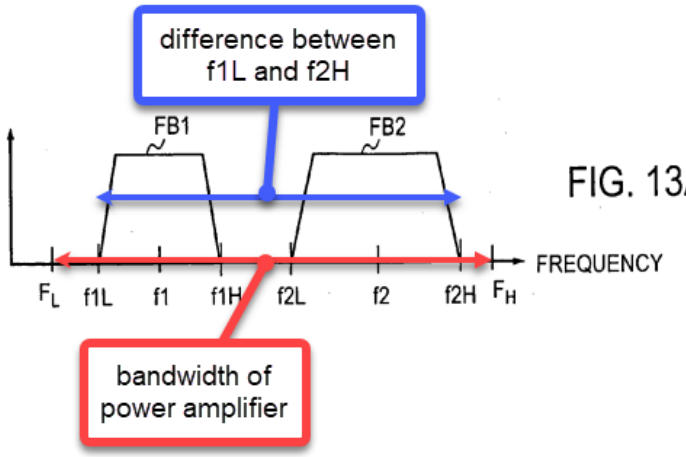

FIG. 13A

118. A POSITA would further understand that the bandwidth of the power amplifier is at least the bandwidth of the signal it amplifies and outputs without distortion. This is because in order to generate a signal with a certain bandwidth (*i.e.* the width of the total frequency band), an amplifier must necessarily have a bandwidth greater than the bandwidth of the signal it generates. If the amplifier does not have a

bandwidth greater than the desired signal, it would not be able to generate the signals for some of the frequency.

119. Indeed, Suzuki discloses that certain predistortion coefficients are obtained by measuring the effect of the power amplifier 28 on signals in each of the covered frequency bands, including FB1 and FB2. Ex. 1004, ¶¶61, 72. A POSITA would thus understand that this requires and means the bandwidth of power amplifier 28 is wide enough to encompass all covered frequency bands, including FB1 and FB2. Otherwise, if the signals exceed the bandwidth of the amplifier, the amplifier would have no effect on portions of those signals and the predistortion coefficients would be inaccurate.

E. Dependent Claim 6: "The method of claim 1 wherein the first information corresponds to a first wireless protocol and the second information corresponds to a second wireless protocol."

120. In my opinion, Suzuki meets this limitation. Suzuki discloses that its system operates with "existing wireless systems, for example, PDC (Personal Digital Cellular), GSM (Global System for Mobile Communications), IMT-2000 (International Mobile Telecommunication 2000)" and that each of these wireless system "allocates each frequency band." Ex. 1004, ¶4. Each of these are different ***wireless protocols***.

121. This allows "a transmission method for using the ***plurality*** of wireless systems [using] a multi-band wireless system." *Id.*, ¶6. A POSITA would therefore

understand that in Suzuki's multi-band system, different wireless systems such as PDC, GSM, or IMT-2000 (*i.e.* ***wireless protocols***) transmit information on different frequency bands in the same signal. Unlike the prior art, Suzuki's predistorter is able to adaptively accommodate predistortion for signals of such multiple protocols and frequency bands. *Id.*, ¶¶4, 7-12 (discussing limitations of prior art multi-band wireless systems that prohibited "transmitting both [protocol] signals in 800 MHz band and in 1.5 GHz band simultaneously," and that the invention of Suzuki would allow for such systems).

122. Since the first information is transmitted in the first frequency band and the second information is transmitted in the second frequency band, the first and second information correspond with the wireless protocol associated with that frequency band.

F. Dependent Claim 7: "The method of claim 1 wherein the first information and the second information are the same data transmitted across two different frequencies."

123. In my opinion, Suzuki discloses this limitation. For example, Suzuki discloses that when using a multi-band wireless system that uses a plurality of different wireless systems operating on different frequency bands, the system can, for example, "transmit[] both signals in 800 MHz band ***and*** in 1.5 GHz simultaneously." Ex. 1004, ¶7. A POSITA would therefore understand that the same information is being transmitted across two different frequencies.

124. It is also my opinion that a POSITA would have found it obvious to transmit the same data across Suzuki's multiple frequencies. For example, a POSITA would be faced with limited design choices for data to be transmitted using Suzuki's system—indeed, just two choices: either send the same data on the two frequencies or send different data. Sending the same data would also have the well-known benefit of providing redundancy, especially in environments involving low signal-to-noise ratios.

G. Dependent Claim 8: "The method of claim 1 wherein the first information and the second information are from the same data stream."

125. In my opinion, Suzuki discloses this limitation. Suzuki discloses that both information and second information comes from the same input data stream S_T. *See, e.g.*, Ex. 1004, ¶¶43-45; *compare* Fig. 1 (showing single input data stream S_T), *with* Fig. 6 (showing two input data streams, S_{T1} and S_{T2}, combined into S_T).

H. Independent Claim 10

126. Claim 10 differs from Claim 1 in that it recites a method using various well-known components for generating the transmitted signal of Claim 1. Specifically, Claim 10 requires receiving two digital signals and processing them using two DACs, two up-converters, a combiner, an amplifier, and a transmitter to generate and transmit a signal that is described in Claim 1—a multi-carrier signal. For this Ground, I rely on two alternative theories for this claim: (1) that Suzuki's embodiment in Figure 6

renders this claim obvious, and (2) that Suzuki's embodiment in Figure 8 renders this claim obvious.

127. In my opinion, there is nothing novel about the use of these components in the claimed sequency to transmit data. Indeed, even the '802 patent acknowledges these were well-known, prior art components for transmitting data in communications systems. Ex. 1001, Fig. 1, 1:12-32 (describing known techniques, such as shown in Fig. 1, including receiving a first digital signal "IN," converting it to analog using DAC 110, filtering noise using filter 120, up-converting to a higher frequency using mixer 130, amplifying the up-converted signal using power amplifier 140, and transmitting the amplified, up-converted signal using antenna 150).

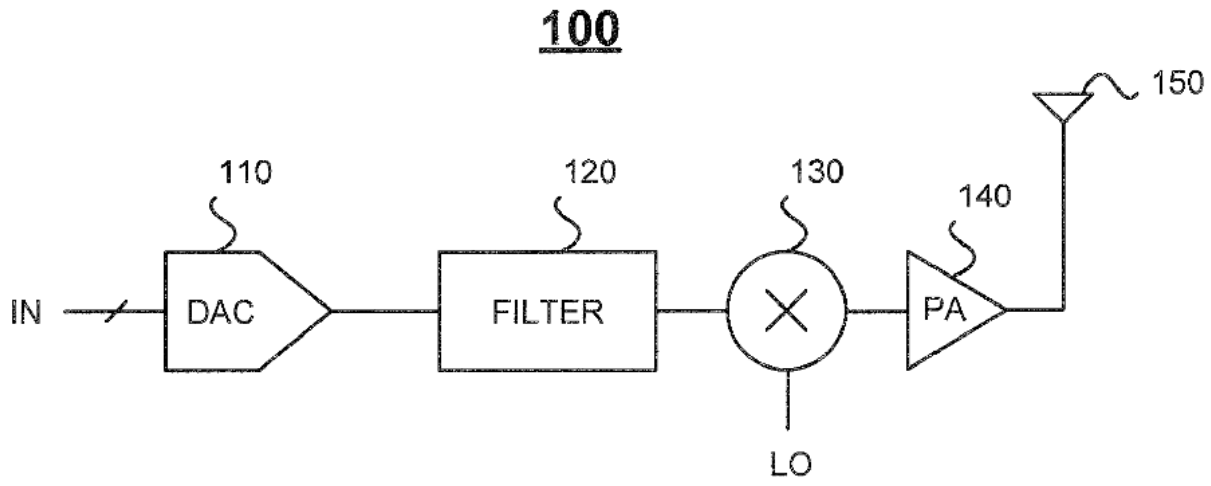

Fig. 1
(prior art)

128. For these reasons, Suzuki and other references disclose the use of these same well-known components for transmitting multi-band wireless signals in which two or more upconverted signals are combined prior to amplification and transmission over an antenna, or at a minimum that it would have been obvious to a POSITA to use such components in a wireless communication system such as Suzuki's.

10[pre]: A method of transmitting information in a wireless communication channel comprising:

129. In my opinion, Suzuki discloses this limitation for the same reasons I discussed above for claim 1[pre].

10[a]: receiving a first digital signal comprising first data to be transmitted;

10[b]: receiving a second digital signal comprising second data to be transmitted;

130. In my opinion, Suzuki discloses these limitations.

131. For example, in the embodiment in Figure 6, "input signal S_T including dual frequency bands of transmitting signals is divided into two input side variable band signal extractors 11-1 and 11-2 at the divider 10 and transmitting signals in dual frequency bands are extracted." Ex. 1004, ¶45. The difference between the extracted symbols and monitor signals from S_M is calculated, and then used to receive predistortion compensation data from lookup tables 17-1 and 17-2, which are the ***first*** and ***second digital signal***, respectively. Ex. 1004, ¶46. Suzuki discloses that these are digital signals because "tables 17-1 and 17-2 are implemented through digital signal

processing." *Id.*, ¶63. A POSITA would understand that the predistortion compensation data will be transmitted after they are added to the respective frequency band from input signal S_T in order to predistort the output signal.

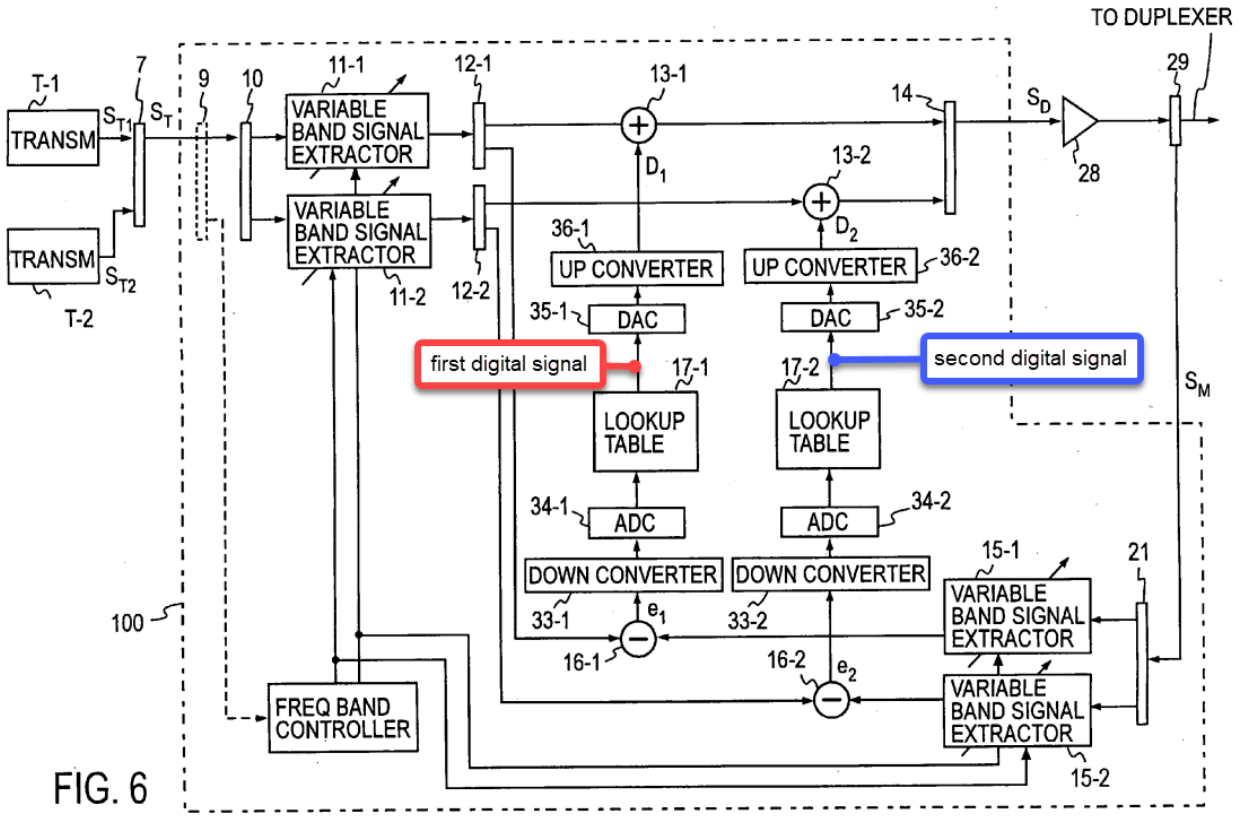

FIG. 6

132. I also believe that these limitations are rendered obvious by the Figure 8 embodiment. Suzuki discloses that in that embodiment, the extracted signals are added to predistortion compensation data from lookup tables 17-1 and 17-2, and are then combined at combiner 14 to generate digital signals S_{D1} and S_{D2} (which are received by DACs 24-1 and 24-2). S_{D1} and S_{D2} are the ***first*** and ***second digital signal***, respectively. *Id.*, ¶48. These signals ***will be transmitted*** at an antenna. *Id.*, ¶58.

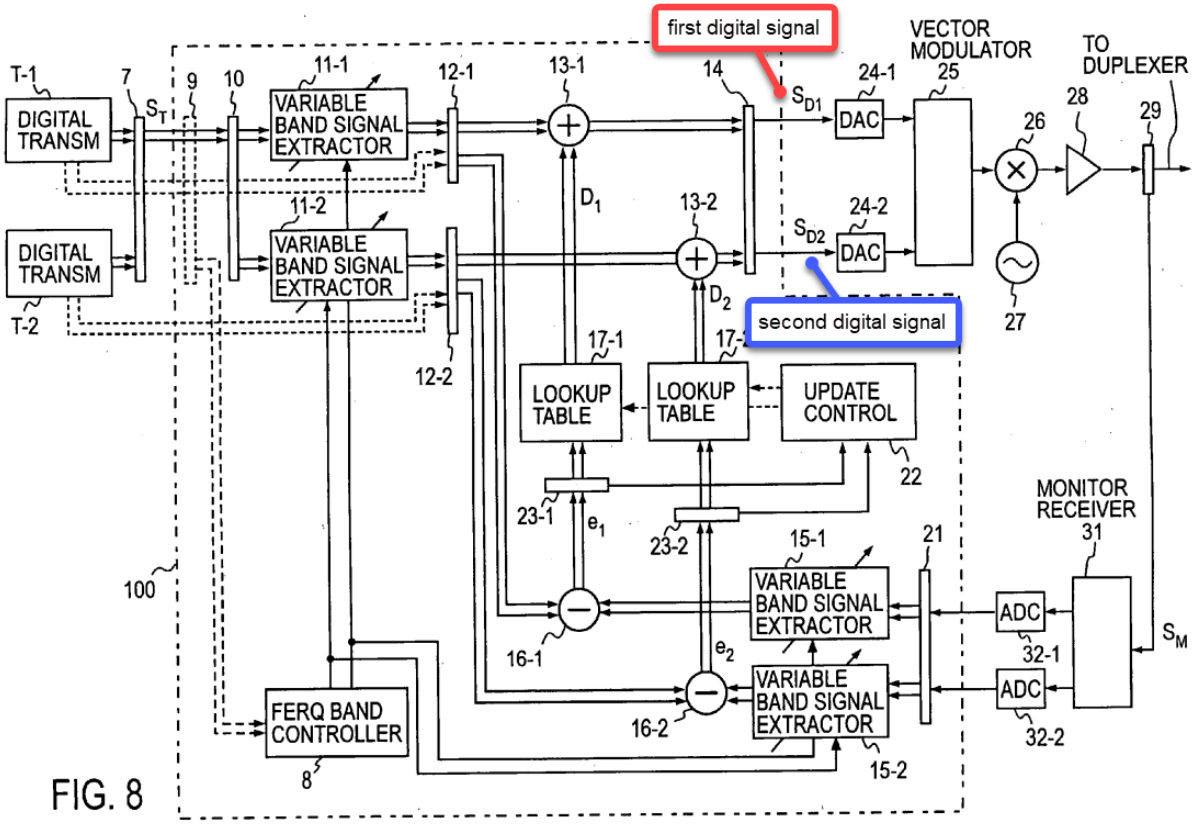

FIG. 8

10[c]: converting the first digital signal into a first analog signal using a first digital-to-analog converter, the first analog signal carrying the first data across a first frequency range;

10[d]: converting the second digital signal into a second analog signal using a second digital-to-analog converter, the second analog signal carrying the second data across a second frequency range;

133. In my opinion, Suzuki discloses these limitations.

134. With respect to ***"converting the [first/second] digital signal into a [first/second] analog signal using a [first/second] digital-to-analog converter,"*** Suzuki discloses that for the Figure 6 embodiment, "distortion compensation data D1 and D2 [*i.e.* ***first/second digital signal***] read out from the lookup tables 17-1 and 17-2

are converted into analog signals at the DACs 35-1 and 35-2," which are the ***first*** and ***second DAC***, respectively. Ex. 1004, ¶63.

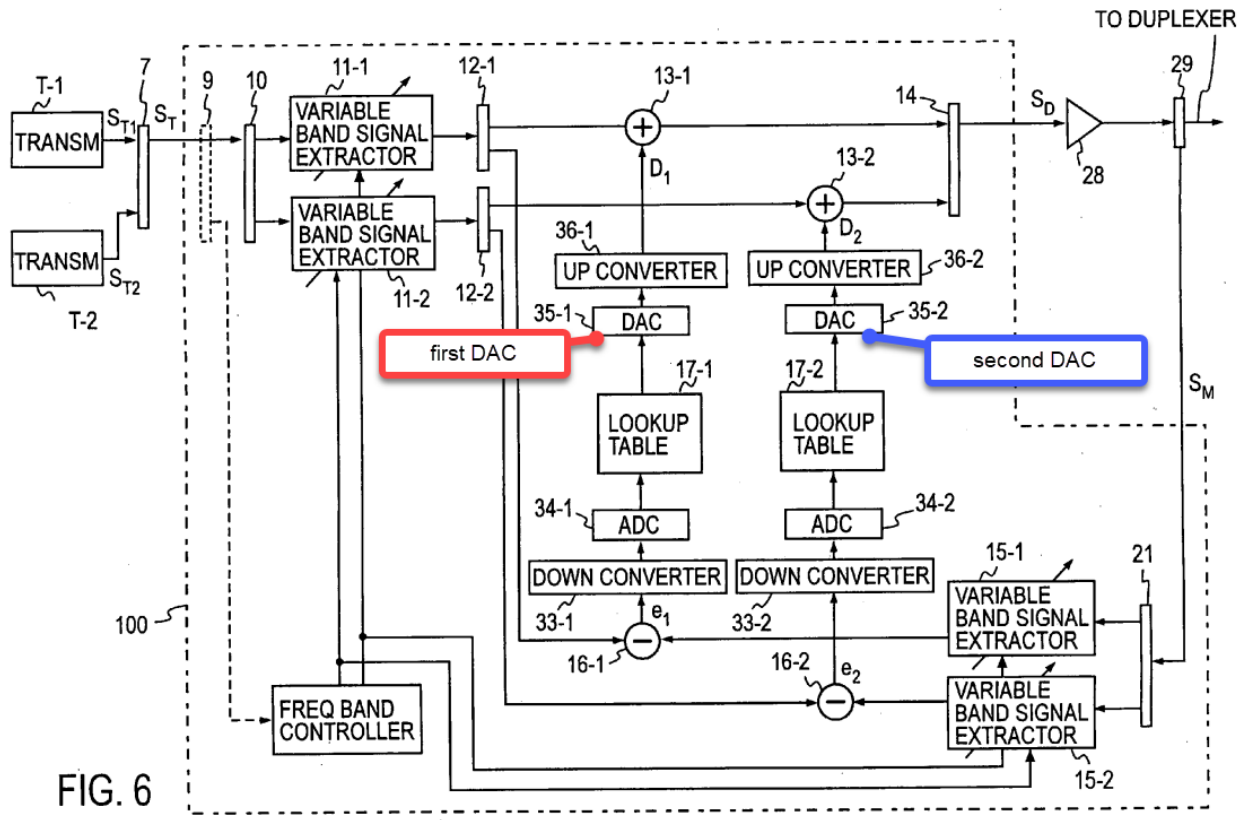

FIG. 6

135. For the Figure 8 embodiment, Suzuki discloses that digital signals S_{D1} and S_{D2} (*i.e.* ***first and second digital signals***) are "converted into analog signals at the digital-analog-converter (DACs) 24-1 and 24-2." Ex. 1004, ¶58. DAC 24-1 is the ***first DAC*** and DAC 24-2 is the ***second DAC***.

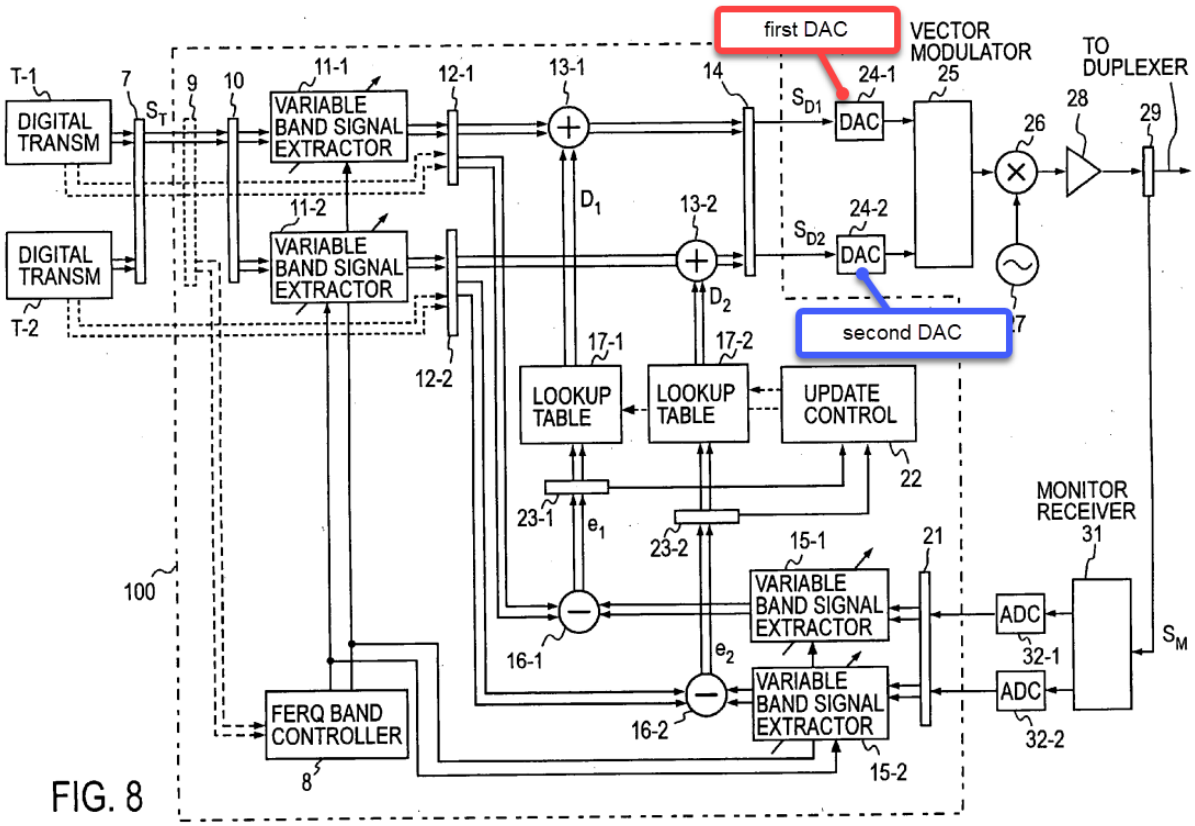

FIG. 8

136. With respect to ***"[first/second] analog signal carrying the [first/second] data across a [first/second] frequency range,"*** in both the Figure 8 and Figure 6 embodiments, the first and second analog signals are upconverted, combined and amplified, leading to the predistorter's output signal. As discussed above for claims 1a and 1b, Suzuki's predistorter carries each predistorted signal across one of the frequency bands in the output signal (***first and second frequency ranges***), such as that depicted in Figure 13A, which depicts first frequency range (f1L to f1H, red line) and second frequency range (f2L to f2H, blue line) centered at f1 and f2. A POSITA would understand that the upconversion process will convert the analog signal's frequency range to a new center frequency. Thus, a POSITA would understand that

the first and second analog signal carry data across a first and second frequency range which is upconverted and/or amplified to be centered on the first and second RF frequency center f1 and f2.

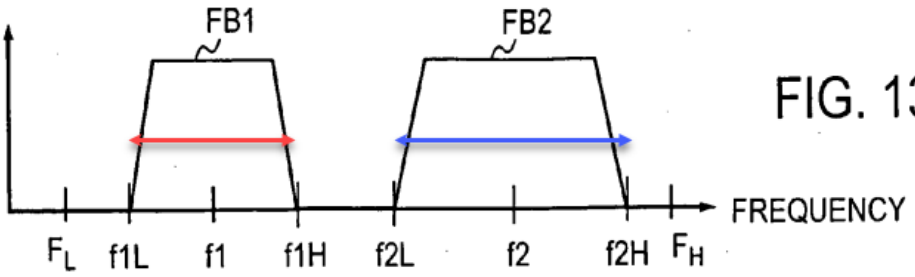

FIG. 13A

10[e]: up-converting the first analog signal to a first RF center frequency to produce a first up-converted analog signal, wherein the first up-converted analog signal comprises a first up-converted frequency range from the first RF center frequency minus one-half the first frequency range to the first RF center frequency plus one-half the first frequency range;

10[f]: up-converting the second analog signal to a second RF center frequency greater than the first center RF frequency to produce a second up-converted analog signal, wherein the second up-converted analog signal comprises a second up-converted frequency range from the second RF center frequency minus one-half the second frequency range to the second RF center frequency plus one-half the second frequency range, and wherein a frequency difference between the first RF center frequency and the second RF center frequency is greater than the sum of one-half the first frequency range and one-half the second frequency range;

137. In my opinion, Suzuki discloses or renders obvious these limitations.

138. With respect to ***"up-converting the [first/second] analog signal to a [first/second] RF center frequency,"*** Suzuki discloses that in the Figure 6 embodiment, the signals from DAC 35-1 and DAC 35-2 are "converted into high frequency signals at the up-converters 36-1 and 36-2." Ex. 1004, ¶63. These signals

are "provided to the adders 13-1 and 13-2," combined in "combiner 14" and then amplified at "power amplifier 28" to generate a transmission signal using the frequency bands depicted in Figure 13A. *Id.* Because there are no other frequency conversions, a POSITA would understand that up-converters 36-1 and 36-2 up-convert the DAC signals to the frequency bands (and therefore the ***first and second RF center frequencies***) used in the transmission signal as depicted in Figure 13A.

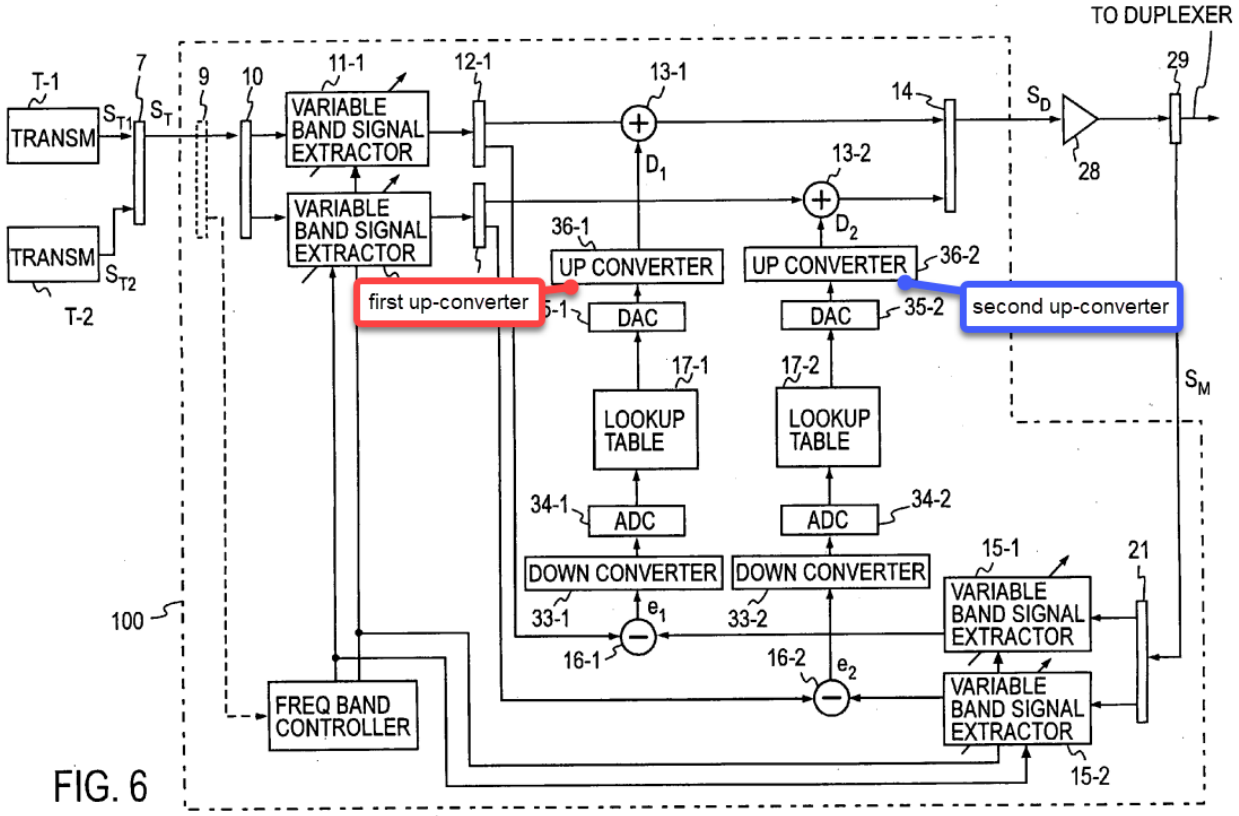

FIG. 6

139. In the Figure 8 embodiment, the analog signals are sent to a "frequency-converter 26" which are then "frequency-converted into a transmission signal of a radio frequency band by a carrier signal." Ex. 1004, ¶58. A POSITA would understand that a frequency-converter is an up-converter, because an up-converter

converts signals to a higher frequency center for transmission over a radio band. Thus, a POSITA would understand that Suzuki discloses that frequency-converter 26 up-converts the analog signals to the frequency band centers used in the transmission signal, which is depicted as f1 and f2 in Figure 13A.

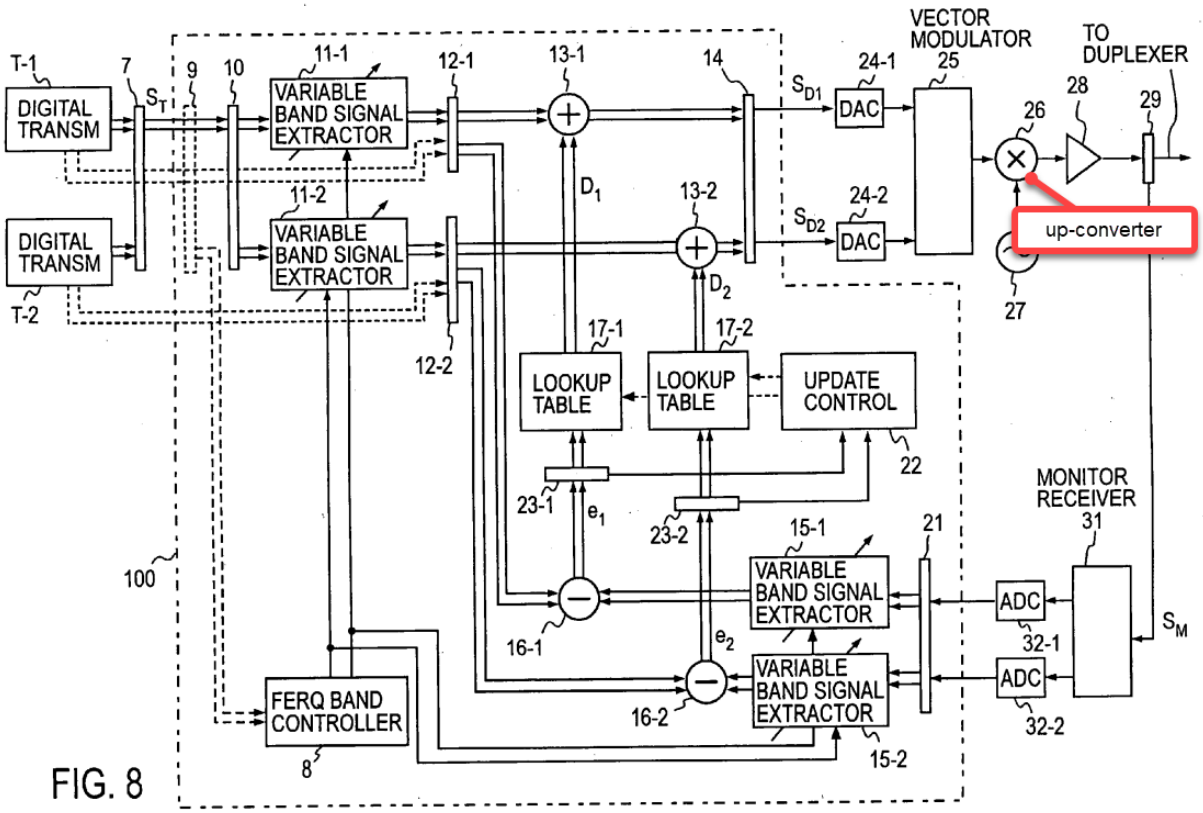

FIG. 8

140. To the extent Patent Owner argues that frequency-converter 26 is not an up-converter, a POSITA would have found it obvious to use a down-converter after the variable band signal extractor 11-1 and 11-2 to down-convert the signal to baseband frequency (a lower frequency spectrum), and then use an up-converter after the DAC 24-1 and 24-2 to return the signal to the desired high frequency bands in Figure 13A for transmission, such as how the Figure 6 embodiment describes it down and then up-

converts signals involving the lookup table. A POSITA would been motivated to modify Figure 8 in view of Figure 6 because a POSITA would know that using circuitry to process digital signals at baseband frequency, including for predistortion operations, is more efficient and has better performance than operating at significantly higher frequencies such as radio frequencies. This is because baseband frequencies are much wider than higher frequencies and are less subject to noise and interference for wired communications. Baseband frequencies, which operate close to a 0 Hz center, are also preferable for digital signal processing, which is used in Figure 8 (hence the need for a DAC). This is because they have "sizable power at lower frequencies" and are thus well-suited for transmission over wires. Ex. 1021, 85. A POSITA would have also reasonably expected this modification to succeed because the use of down- and up-converters was well-known and conventional and well within the capabilities of a POSITA. *Id.*

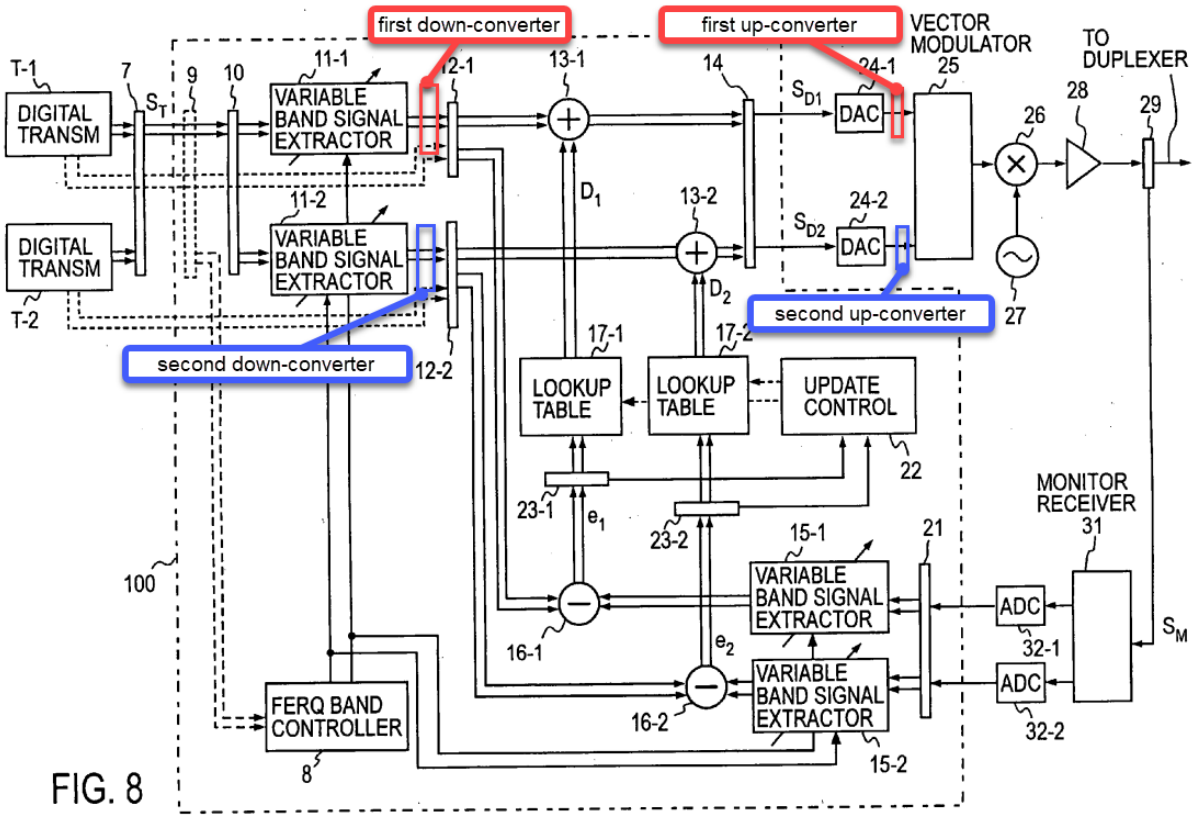

FIG. 8

141. Moreover, up- and down-converters were conventional and frequently-used components within wireless communication systems, and a POSITA would have reasonably expected these modifications to succeed. Ex. 1007, ¶62 (components that perform "frequency up-conversion … are commonly employed in RF transmitters."). In fact, as I explained above, the '802 patent acknowledged that it was known to use up-converters to up-convert baseband analog signals to a higher carrier frequency for transmission. Ex. 1001, Fig. 1, 1:12-32.

142. With respect to ***"[first/second] up-converted frequency range from the [first/second] RF center frequency minus one-half the [first/second] frequency range to the [first/second] RF center frequency plus one-half the [first/second]***

frequency range," in my opinion, Suzuki discloses this limitation. For both embodiments, as discussed above for claims 10c and 10d (and claims 1a and 1b), the transmission signal uses the frequency bands depicted in Figure 13A. In Figure 13A, ***first frequency range*** FB1 has an ***RF center frequency*** f1, with an upper limit of f1H and lower limit of f1L. Ex. 1004, ¶79. Similarly, ***second frequency range*** FB2 has an ***RF center frequency*** f2, with an upper limit of f2H and a lower limit of f2L. *Id.* Because "[t]he center frequency of each frequency band is obtained by f1=(f1L+f1H)/2 and f2=(f2L+f2H)/2," the center frequencies for both frequency ranges is the center frequency plus and minus one-half of the range, as claimed.

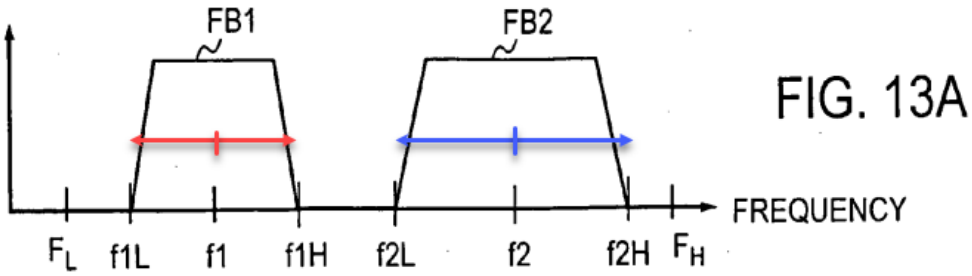

FIG. 13A

143. With respect to ***"wherein a frequency difference between the first RF center frequency and the second RF center frequency is greater than the sum of one-half the first frequency range and one-half the second frequency range,"*** in my opinion, Suzuki discloses this limitation for the same reasons I provided above for claim 2.

10[g]: combining the first up-converted analog signal and the second up-converted analog signal to produce a combined up-converted signal;

144. In my opinion, Suzuki discloses or renders obvious this limitation.

145. For the Figure 6 embodiment, Suzuki discloses that the up-converted analog signals from up-converters 36-1 and 36-2 are added to the transmitting signal S_T "at the adders 13-1 and 13-2" and then "are combined with each other at the combiner 14" at combiner 14. Ex. 1004, ¶48.

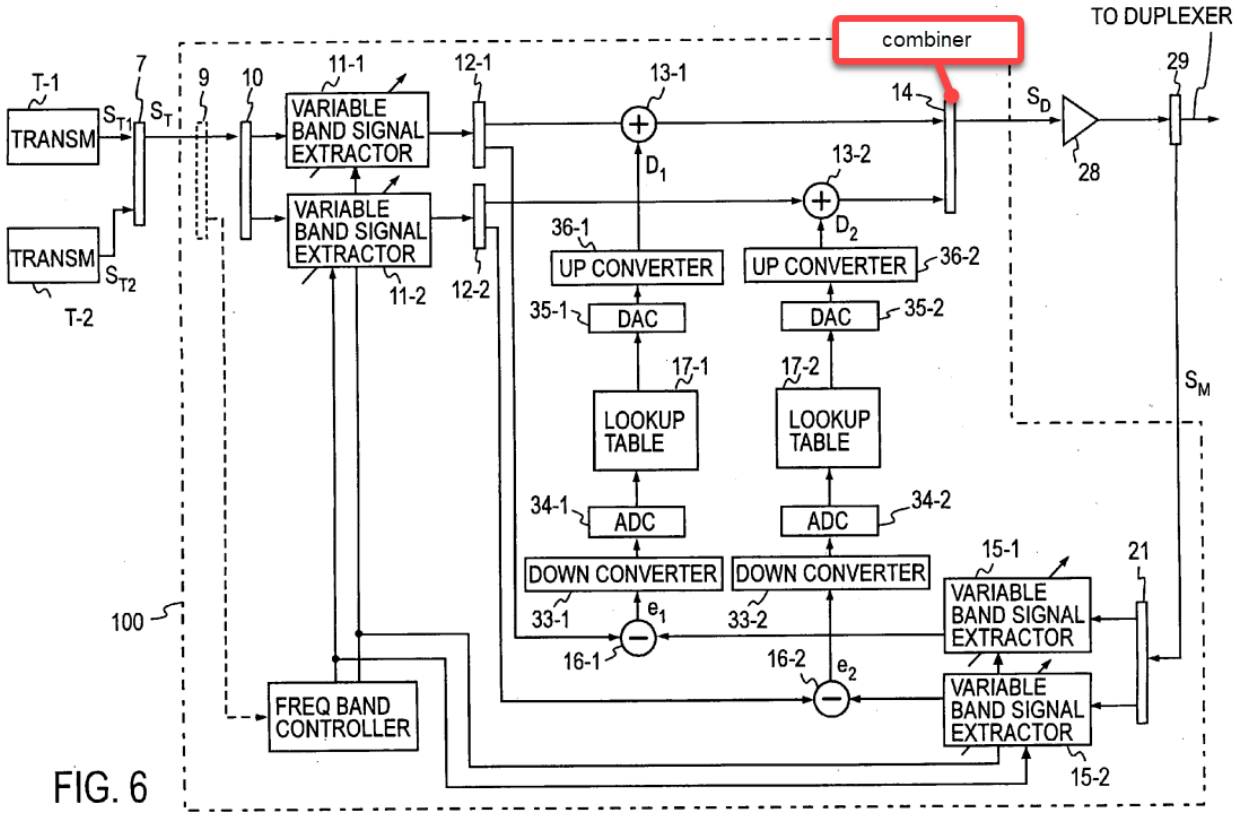

FIG. 6

146. For the Figure 8 embodiment, the signals are combined at vector modulator 25. Ex. 1004, ¶58. It would have been obvious to a POSITA to modify Figure 8's embodiment to combine the signals after up-conversion, as claimed. Whether to combine signals before or after up-conversion is merely one of two discrete choices that had predictable results. In fact, it is preferable to combine after up-

conversion, as that would allow greater flexibility in choosing which frequency band to use for each signal.

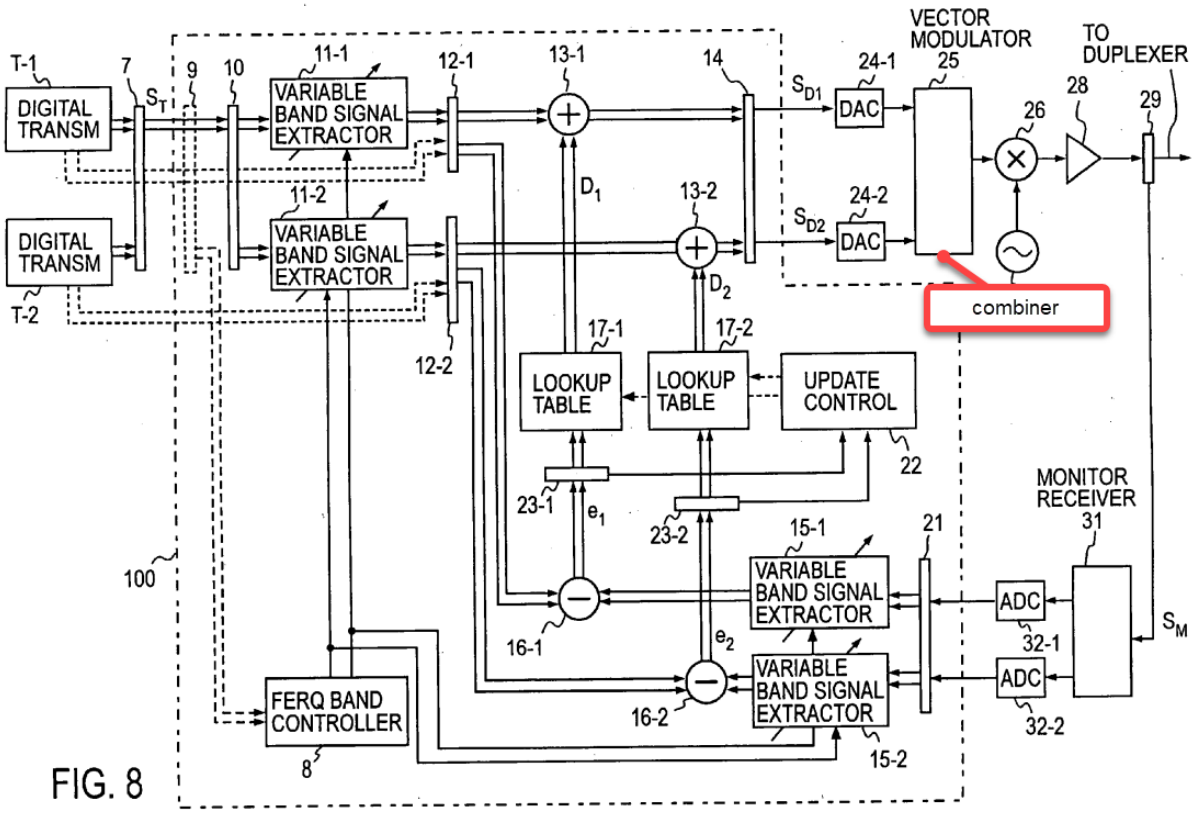

FIG. 8

10[h]: amplifying the combined up-converted signal in a power amplifier resulting in an amplified combined up-converted signal; and

147. In my opinion, Suzuki discloses this limitation. For both Figure 6 and Figure 8 embodiments, Suzuki teaches "an output from the predistorter 100 is ***power amplified at the power amplifier 28***." Ex. 1004, ¶63; *see also* ¶70 (Fig. 8). Indeed, the very purpose of Suzuki's predistorters is to compensate for predistortion caused by power amplification. *Id.*, ¶1. A POSITA would understand that the output of the power amplifier is an ***amplified combined up-converted signal***.

148. I have annotated Figure 6 below to indicate the power amplifier:

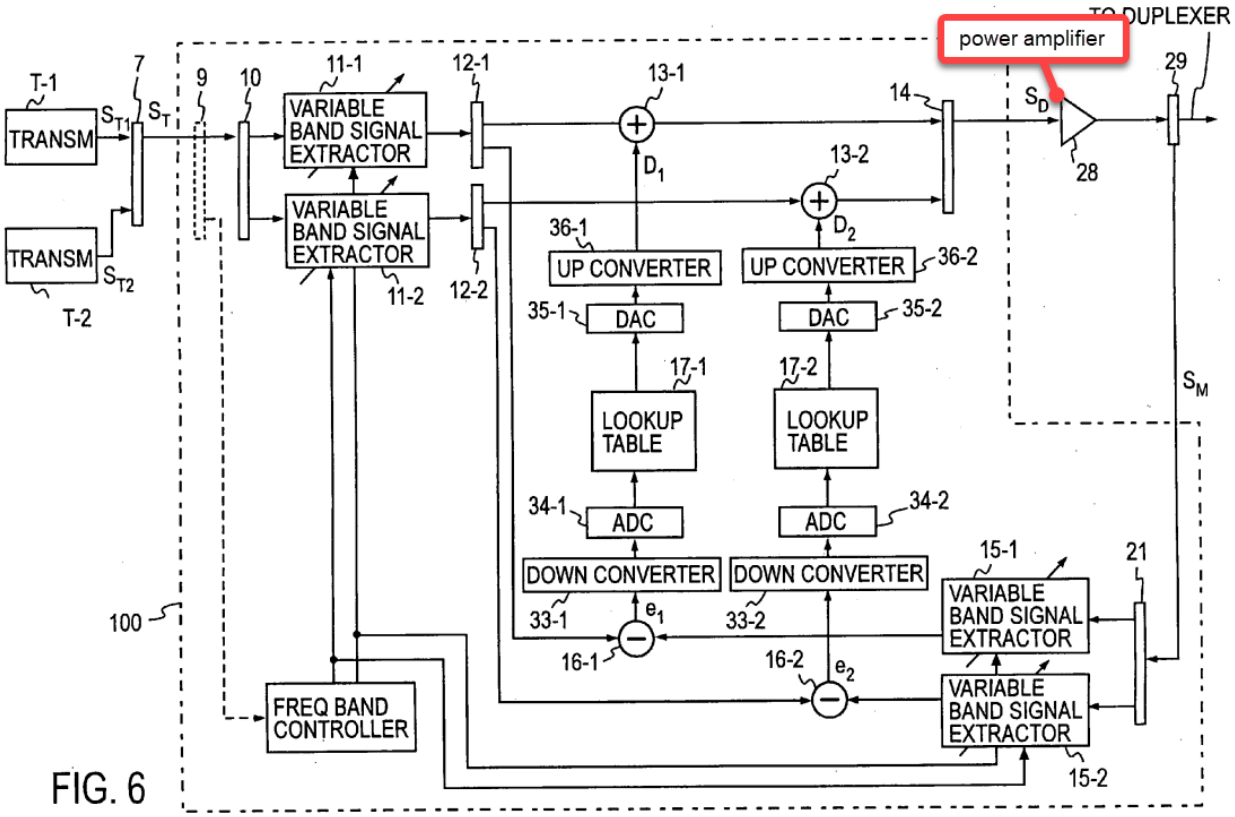

FIG. 6

149. And I have annotated Figure 8 below:

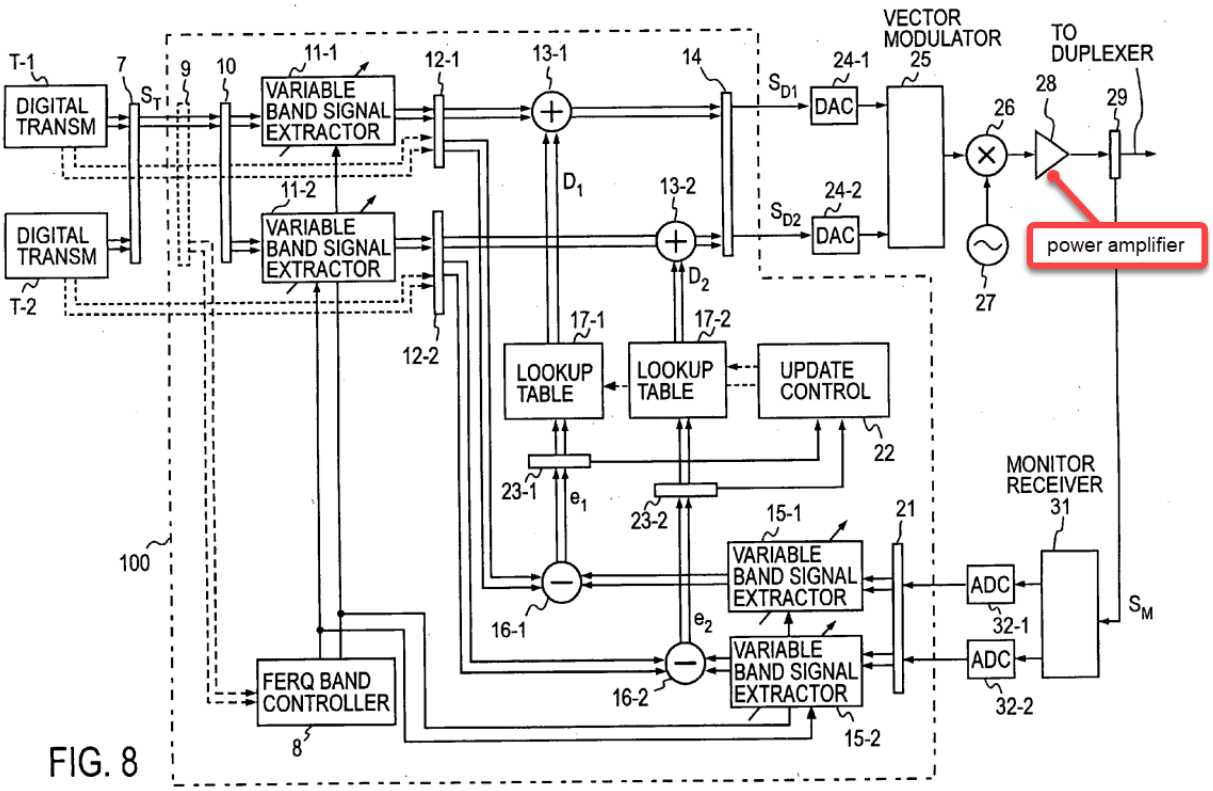

FIG. 8

10[i]: transmitting the amplified combined up-converted signal on a first antenna,

150. In my opinion, Suzuki discloses this limitation. Suzuki teaches that, for both the Figure 6 and Figure 8 embodiments, "the power amplified output is provided to … ***an antenna (not shown)***." *Id.*, ¶63. Suzuki describes this signal as a "transmitting signal," and a POSITA would understand that providing the signal to an antenna means that it will be ***transmitted by the antenna***. *Id.*, ¶59.

10[j]: wherein the bandwidth of said power amplifier is greater than the difference between a lowest frequency in the first up-converted frequency range and a highest frequency in the second up-converted frequency range.

151. In my opinion, Suzuki discloses this limitation for the same reasons I gave above for claim 4.

I. Dependent Claim 13: "The method of claim 10 wherein the first digital signal is encoded using a first wireless protocol and the second digital signal is encoded using a second wireless protocol."

152. In my opinion, Suzuki discloses this limitation for the same reasons I gave above for claim 6.

J. Independent Claim 17

17[pre]: A wireless communication system comprising:

153. In my opinion, Suzuki discloses this limitation for the same reasons I gave above for claim 10[pre].

17[a]: a baseband digital system for providing a first digital signal comprising a first data to be transmitted and a second digital signal comprising a second data to be transmitted;

154. In my opinion, Suzuki discloses this limitation for the same reasons I gave above for claim 10[a]. It is also my opinion that Suzuki discloses a ***baseband digital system***. Ex. 1004, ¶2 ("digital signal processor" using a "baseband linerarizer"); ¶63 (explaining that the individual signals of S_M (and therefore S_T) "are converted from high frequency signals to base band signals"); ¶70 (explaining that S_M can be downconverted to "baseband signals," thereby indicating that S_T was formed from baseband signals, as is well-understood in the art); ¶93 (describing S_T as a "base band transmitting signal").

17[b]: a first digital-to-analog converter for receiving the first digital signal and converting the first digital signal into a first analog signal, the first analog signal carrying the first data across a first frequency range;

155. In my opinion, Suzuki discloses or renders obvious this limitation for the same reasons I gave above for claim 10[c].

17[c]: a second digital-to-analog converter for receiving the second digital signal and converting the second digital signal into a second analog signal, the second analog signal carrying the second data across a second frequency range;

156. In my opinion, Suzuki discloses this limitation for the same reasons I gave above for claim 10[d].

17[d]: a first up-converter circuit having a first input coupled to receive the first analog signal and a second input coupled to receive a first modulation signal having a first RF frequency, wherein the first up-converter outputs a first up-converted analog signal comprising a first up-converted frequency range from the first RF frequency minus one-half the first frequency range to the first RF frequency plus one-half the first frequency range;

157. In my opinion, Suzuki discloses this limitation for the same reasons I gave above for claim 10[e].

17[e]: a second up-converter circuit having a first input coupled to receive the second analog signal and a second input coupled to receive a second modulation signal having a second RF frequency, wherein the second up-converter outputs a second up-converted analog signal comprising a second up-converted frequency range from the second RF frequency minus one-half the second frequency range to the second RF frequency plus one-half the second frequency range, and wherein frequency difference between the first RF frequency and the second RF frequency is greater than the sum of

one-half the first frequency range and one-half the second frequency range; and

158. In my opinion, Suzuki discloses this limitation for the same reasons I gave above for claim 10[f].

17[f]: a power amplifier coupled to receive the first and second up-converted analog signals, wherein the bandwidth of the power amplifier is greater than the difference between a lowest frequency in the first up-converted frequency range and a highest frequency in the second up-converted frequency range.

159. In my opinion, Suzuki discloses this limitation for the same reasons I gave above for claim 10[h].

K. Dependent Claim 21: "The communication system of claim 17 wherein the first data of the first digital signal is encoded using a first wireless protocol and the first data of the second digital signal is encoded using a second wireless protocol."

160. In my opinion, Suzuki discloses this limitation for the same reasons I gave above for claim 6.

L. Dependent Claim 22: "The communication system of claim 17 wherein the second data corresponds to the first data and wherein the power amplifier outputs a third up-converted signal comprising the up-converted first analog signal and the up-converted second analog signal."

161. *See* claim 7, claim 8 and claim 10g. To the extent "corresponds to" is discernable and means that the first and second data are the same data, then as set forth in my analysis for claim 7, Suzuki discloses the first and second information being the same data. To the extent it means they are from the same data stream, then as set forth in my analysis for claim 8, Suzuki discloses that as well.

162. And as set forth in my analysis for claim 10g above, Suzuki discloses or renders obvious ***combining the first and second up-converted analog signals***, which discloses this limitation's requirement of ***outputting a third up-converted signal comprising the first and second up-converted analog signals.*** Thus, all that remains in this limitation is that the ***power amplifier*** performs the combining of the up-converted signals.

163. A POSITA would understand that the ***power amplifier*** outputs a third up-converted signal that comprises the first and second up-converted signals or at least could perform the step of combining the first and second up-converted analog signals disclosed in Suzuki, thereby producing a third up-converted signal comprising the up-converted first and second analog signals. For example, the embodiments of Figure 6 and Figure 8 shows first and second up-converted signals being combined (via combiner 14 or vector modulator 25) and provided to power amplifier 28, which thus outputs a third up-converted signal that comprises the first and second signals. Figure 13A depicts the combined analog signals.

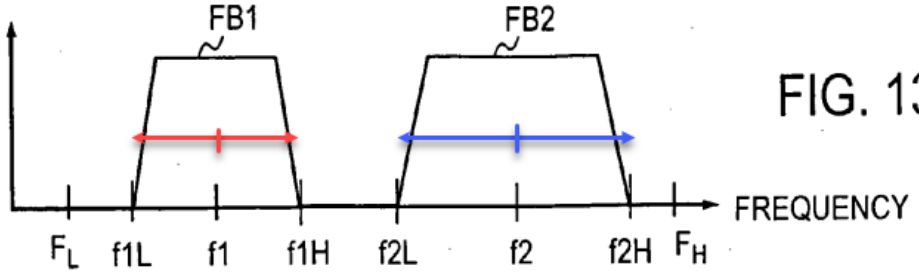

FIG. 13A

X. GROUND 3: SUZUKI IN VIEW OF JALALI RENDER OBVIOUS CLAIMS 7-9, 22, AND 23

164. In my opinion, Jalali teaches a number of things that would be obvious to incorporate into Suzuki. For example, OFDM that uses time-division as claimed by claims 9 and 23. Another example is the teaching of using the same data or data stream, as recited in claims 7, 8, and 22.

165. Claims 9 and 23 recite that the first and second information are transmitted as OFDM symbols, where (1) a first and second symbol are sent across the first and second frequency range during a first time slot, and (2) a third and fourth symbol are sent across the first and second frequency range during a second time slot. OFDM, which stands for orthogonal frequency division multiplexing, was a well-known method, and claims 9 and 23 claim the use of time-division in an OFDM signal, which was also well-known. Jalali describes one such method for time-dividing an OFDM signal, and it would have been obvious to modify Suzuki according to Jalali's teachings. The combination also renders obvious claims 7, 8, and 22, because transmitting a multi-carrier signal where both carriers carry the same data or are from the data stream was well-known.

A. Rationale to Combine Suzuki with Jalali

166. In my opinion, a POSITA would be motivated to combine Suzuki and Jalali. Specifically, a POSITA would have been motivated to incorporate Jalali's teaching of a specific signal modulation, *i.e.*, the use of time-division multiplexing *on*

top of OFDM (Orthogonal Frequency Division Multiplexing), into Suzuki's wireless transmitter. Suzuki discloses frequency-division multiplexing but is agnostic as to how the frequency spectrum is divided. Suzuki discloses that its system operates with GSM, which was known to use FDMA and TDMA, and therefore was readily applicable for Jalali's improvements. Ex. 1004, ¶4 (identifying GSM); Ex. 1024, 9:59 ("GSM is a TDMA/FDMA system"). Indeed, by January 2008, the earliest priority date of the '802 patent, OFDM with time-division multiplexing had long been known to be superior to traditional FDM techniques, including GSM's use of TDMA and FDMA.

Throughout the decades that FDM had been known, the industry developed different methods of frequency-division multiplexing. For example, one older method called L-carrier was developed in the 1930s by AT&T for long-distance communication over coaxial cable—it uses 12 channels of 4 KHz frequency ranges for a total of 48 KHz of bandwidth. This system became obsolete by the 1980s as higher bandwidth was needed. A more relevant example is OFDM, which was first proposed in the 1960s. Ex. 1020, 1. Traditional FDM modulation would include gaps, or "guard bands," between each channel to prevent interference. One disadvantage with this approach is that it requires a large amount of bandwidth since the signals cannot overlap and there must be gaps to prevent interference. By contrast, OFDM allows for overlapping channels by introducing orthogonality, where the signals are spaced in a specific way so that one signal's peak overlaps with its neighboring signals being

zero—this way, the signals do not interfere with one another. Although OFDM was introduced in 1966, it was only until the 1980s when enough advancements took place to maintain consistent orthogonality in the signals. Ex. 1020, 4. The advantages of OFDM were well-known, as it allowed for more efficient use of frequency spectrum because signals could be overlapped. In essence, OFDM was an improvement to FDM that had been known by the time of the '802 patent. Indeed, while GSM and 3G wireless standards did not use OFDM, by the mid-2000s, 3GPP proposed that the next-generation LTE use OFDMA (orthogonal frequency division multiple access), which is OFDM where each channel is divided into time slots (as claimed in claims 9 and 23). As was recognized by the 3GPP before the '802 patent, OFDM was "a well-known modulation technique," and "remarkable" because "sub-carriers are very tightly spaced to make efficient use of available bandwidth, yet there is virtually no interference among adjacent sub-carriers." Ex. 1026, 6. Thus, a POSITA would have recognized the advantage of upgrading Suzuki's use of GSM (which used TDMA and FDMA) to OFDM with time-division multiplexing.

167. As discussed above, Suzuki teaches simultaneously transmitting two or more signals across different frequency ranges centered on different frequency centers, known in the art as a multi-carrier signal. Jalali teaches one well-known method for multi-carrier signals called OFDM that also uses time-division multiplexing for each of the frequency divisions.

168. There were well-known benefits to OFDM with TDM that would have motivated a POSITA to use it with Suzuki. As Jalali explains it, "frequency diversity," such as taught in Suzuki, "can be achieved by employing a multi-carrier modulation scheme," and "[o]ne such scheme that has ***numerous advantages*** is OFDM." Ex. 1008, 8:49-50. As Jalali describes it, "[w]ith OFDM modulation, the overall transmission channel is essentially divided into a number of (L) parallel sub-channels that are used to transmit the same or different data. The overall transmission channel occupies the total operating bandwidth of W, and each of the sub-channels occupies a sub-band having a bandwidth of W/L and centered at a different center frequency." *Id.*, 8:50-56. This description of an OFDM signal matches that of the signal output by Suzuki and depicted in Suzuki's Figure 13A, as well as other references.

169. Jalali also explains that by using OFDM, "[e]ach of the sub-channels may also be considered an independent data transmission channel that may be associated with a particular (and possibly unique) processing, coding, and modulation scheme," which a POSITA would understand would provide flexibility in the transmission. *Id.*, 8:58-62.

170. Jalali also explains the well-known benefits of further using time-diversity multiplexing with OFDM, specifically on each frequency band. By using TDM, "data transmission occurs over time slots that may be selected to provide immunity to time dependent degradation in the communications link." Ex. 1008, 9:13-

16. This "improves the likelihood of correct data reception due to, for example, impulse noise and interference." *Id.*, 9:23-26.

171. Using OFDM with TDM "allows the communications system of the invention to provide robust performance," because "frequency" and "temporal diversity improves the likelihood of correct reception of at least some of the transmitted data, which may then be used … to correct for some errors that may have occurred in the other transmissions." *Id.*, 9:27-33. Such diversity "also allows the communications system to concurrently accommodate different types of services having disparate data rate, processing delay, and quality of service requirements." *Id.*, 9:34-38. Moreover, OFDM with TDM "provide[s] the most flexibility" and "high performance and efficiency." *Id.*, 15:26-28. It also allows for different modulation schemes at different sub-channels and time slots, which "results in the best use of the resource at that particular time, frequency, and space." *Id.*, 15:36-42.

172. Thus, given these numerous and well-known benefits from using OFDM with TDM, in my opinion, a POSITA would have been motivated to incorporate Jalali's OFDM-TDM teachings into Suzuki. In fact, Suzuki states its system is used for GSM, and it was known that GSM combined TDMA and FDMA. Ex. 1004, ¶4 (identifying GSM); Ex. 1024, 9:59 ("GSM is a TDMA/FDMA system"). This would provide further motivation for a POSITA to look to Jalali.

173. It is also my opinion that a POSITA would have reasonably expected this combination to succeed. OFDM with TDM had long been known in the field and a POSITA would have been familiar with its implementation, including as described by Jalali. Implementing OFDM with TDM into Suzuki would have been well within the capabilities of a POSITA, especially because Suzuki already discloses the use of GSM which was known to already implement TDMA and FDMA. A POSITA would therefore understand that Suzuki was compatible and readily applicable for OFDM with TDM.

174. Finally, it is my opinion that Suzuki, Jalali, and the '802 patent are all directed to the same field of endeavor: the field of multi-carrier transmissions, that is, simultaneously transmitting multiple sets of information using different frequency bands. Ex. 1001, Abstract ("Embodiments of the present invention transmit signals simultaneously over a communication channel at different RF center frequencies"); Ex. 1004, ¶1 ("[T]the present invention relates to a multi-band lookup table type predistorter for collectively amplifying high frequency signals of a plurality of bands."); Ex. 1008, 1:25-28 ("[T]he present invention relates to a novel and improved communications system employing multi-carrier modulation and having high efficiency, improved performance, and enhanced flexibility.").

B. Claims 7, 8, and 22

175. Claim 7 recites that the first and second information are the ***same data*** transmitted across two different frequencies. Claim 8 recites that the first and second information are from the ***same data stream***. Claim 22 recites, in part, that the second data ***corresponds*** to the first data.

176. In my opinion, Jalali discloses all three limitations, and therefore the Suzuki-Jalali combination renders obvious these claims. Jalali states that with OFDM, "the overall transmission channel is essentially divided into a number of (L) parallel sub-channels that are used to transmit the ***same or different data***." Ex. 1008, 8:50-53; *see also* 9:1-4 ("same data being transmitted on both sub-channels"). In the Suzuki-Jalali combination, Suzuki would likewise transmit information that is the same data or from the same data stream, on different frequency bands.

177. In my opinion, having two frequency bands carry the same data means that the information came from the ***same data stream***. And it is also my opinion that the first data ***corresponds*** with the second data when they are the same data.

C. Claims 9 and 23

178. In my opinion, Suzuki in view of Jalali render obvious claims 9 and 23. These two claims recite OFDM using time-division multiplexing. As I discussed above, a POSITA would have found it obvious to transmit Suzuki's transmissions using the time-divided OFDM methods described in Jalali.

179. With respect to ***"first information and second information comprise a plurality of OFDM symbols,"*** Jalali teaches that Figure 2 depicts a transmission of 16 sub-channels (along the frequency axis) that "is used to transmit a sequence of ***OFDM symbols***" across time slots. Ex. 1008, 13:55-56. For example, "data 5" and "data 6" in Figure 2 are ***first and second information comprising a plurality of OFDM symbols***.

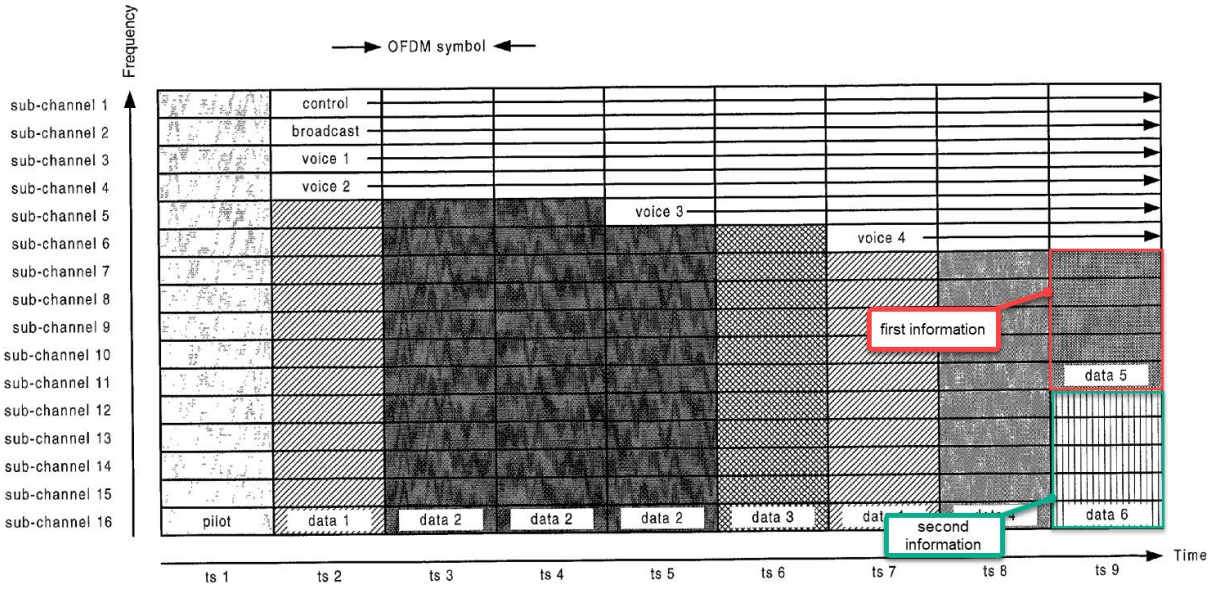

FIG. 2

180. Jalali describes that these OFDM symbols are "used to transmit signaling, voice, traffic data, and others." *Id.*, 13:64-65. Jalali also teaches that "each sub-channel at each time slot … may be viewed as an independent unit of transmission (i.e., a modulation [or OFDM] symbol) that can be used to transmit any type of data." *Id.*, 15:28-31.

181. With respect to ***"a first symbol is transmitted during a first time slot across the first frequency range and a second symbol is transmitted during the first time slot across the second frequency range,"*** Jalali discloses that in Figure 2, one of the OFDM symbols for data 5 (***first symbol***) uses sub-channel 11 (***first frequency range***) in time-slot 9 (***first time slot***), and one of the OFDM symbols for data 6 (***second symbol***) uses sub-channel 12 (***second frequency range***) in the same time-slot. I've annotated Figure 2 to show this.

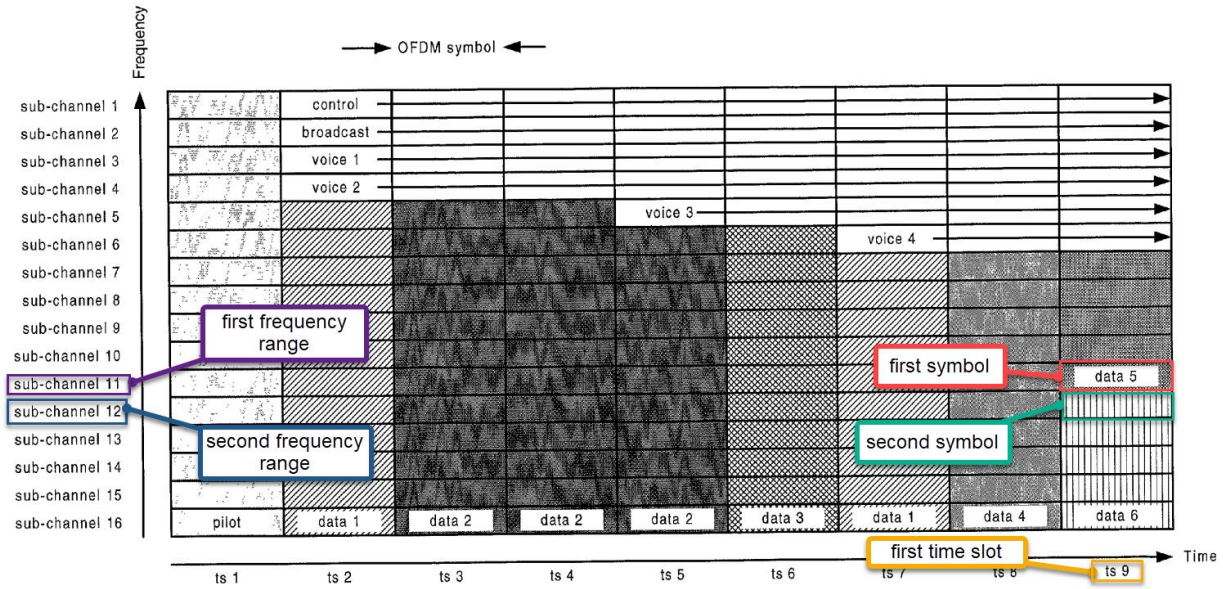

FIG. 2

182. As can be seen in Figure 2 from my annotations, the sub-channels are on the frequency y-axis and thus each covers a different frequency range. Jalali further discloses that, along the x-axis, "data transmission is partitioned into time slots, with each time slot having the duration of, for example, the length of one modulation symbol." Ex. 1008, 15:59-62. Jalali further teaches that "a particular data transmission

… may occur over multiple sub-channels and/or multiple time slots, and multiple data transmissions … may occur at one time slot," meaning data may cover multiple frequency ranges and/or multiple time slots. *Id.*, 16:42-45. Symbols for a given time slot are simultaneously transmitted on the different frequency ranges (*i.e.* the different sub-channels).

183. As discussed above, in the proposed Suzuki-Jalali combination, Jalali's sub-channel frequency range corresponds with the frequency ranges in Suzuki's Figure 13A.

184. With respect to ***"a third symbol is transmitted during a second time slot across the first frequency range and a fourth symbol is transmitted during the second time slot across a second frequency range,"*** Jalali teaches that a data transmission "may occur over … multiple time slots," such as "data 2" in Figure 2, which occurs over time slots 3, 4, and 5. Ex. 1008, 16:42-43. While Figure 2 does not depict that data 5 and data 6 occur over multiple time slots, a POSITA would have understood from Jalali's teachings that data 5 and data 6 could continue using the same sub-channels in a subsequent time slot, such as depicted in the below Figure 2 which I have revised to include a subsequent time slot 10 that extends out data 5 and data 6. In the revised Figure 2, one of the OFDM symbols for data 5 (***third symbol***) uses sub-channel 11 (***first frequency range***) in time-slot 10 (***second time slot***), and one of the

OFDM symbols for data 6 (***fourth symbol***) uses sub-channel 12 (***second frequency range***) in the same time-slot.

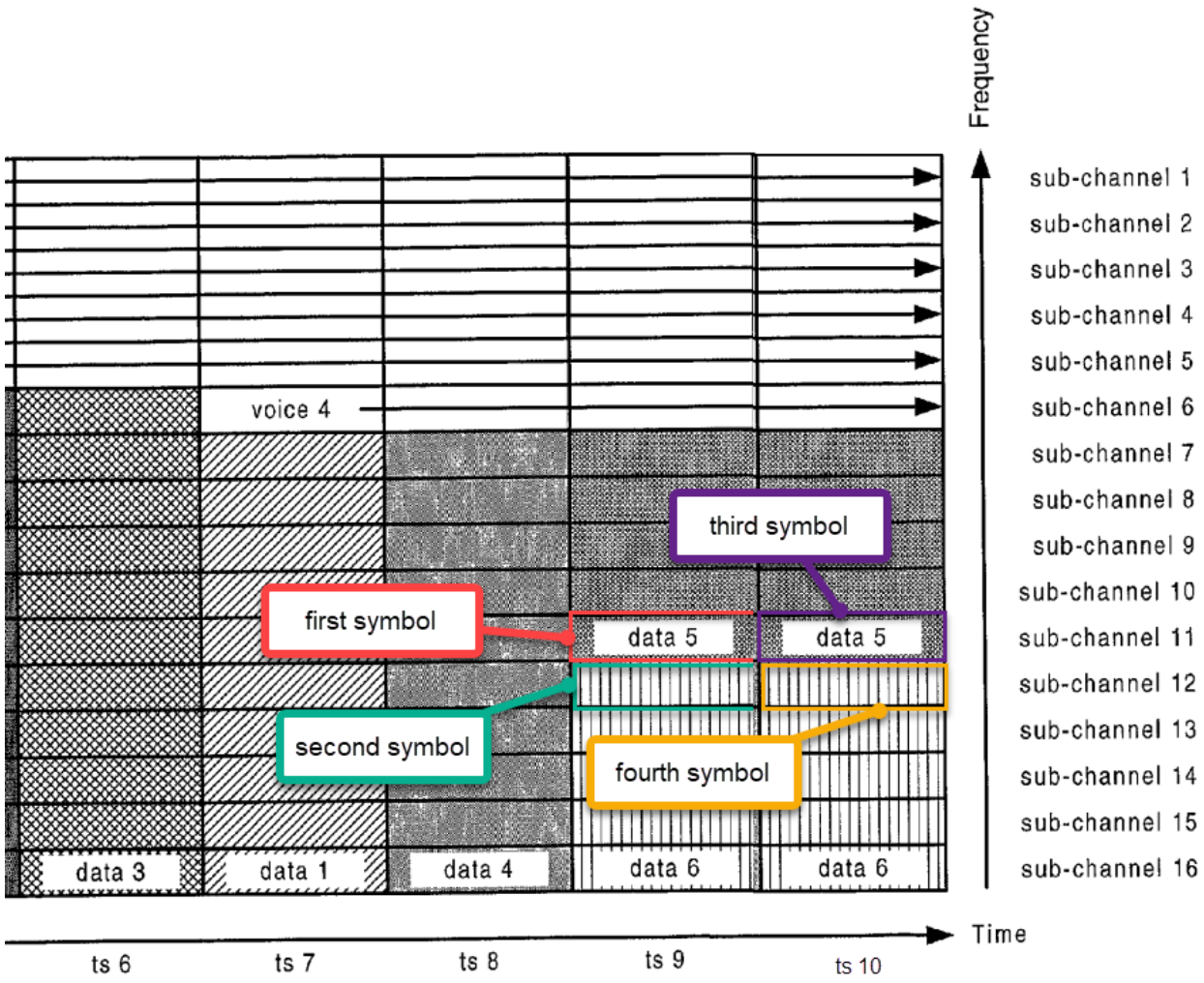

FIG. 2

185. A POSITA would understand that if data 5 and data 6 was as large as data 2, it would in fact be necessary to transmit both data across multiple time slots. Indeed, Jalali teaches that the purpose of using TDM (time division modulation) is that it "allows for greater flexibility in the transmission of voice data and traffic data, and

various assignments of resources can be contemplated," including having data 5 and data 6 as depicted in time slot 9 be further transmitted across multiple time slots. *Id.*, 15:63-65.

XI. GROUND 4: SUZUKI IN VIEW OF CHEN RENDER OBVIOUS CLAIMS 14 AND 24-25

186. Claims 14 and 24 are somewhat different than the previous claims I have analyzed. Specifically, Independent Claims 1, 10, and 17 are directed to generating and transmitting a multi-carrier signal. By contrast, Claims 14 and 24 are directed to receiving and processing a transmitted, multi-carrier signal. However, in my opinion, these claims simply recite conventional, well-known components for receiving and processing multi-carrier signals, such as a low noise amplifier (claim 14), separate down-converters for each frequency band (claims 14 and 24), and a filter (claim 24). Chen describes a receiver containing such components, and in my opinion, a POSITA would have found it obvious to combine Suzuki's transmitter with Chen's receiver. The combination also renders obvious Claim 25 for the reasons discussed above in Ground 2 for Claim 2.

A. Rationale to Combine Suzuki and Chen

187. In my opinion, a POSITA would have been motivated to combine Suzuki's multi-carrier signal transmitter with Chen's multi-carrier signal receiver.

188. A POSITA would have been motivated to combine Suzuki and Chen such that Chen's receiver receives the wireless multi-carrier signal from Suzuki's

transmitter. As an initial matter, the components claimed in 14 and 24 and described in Chen's receiver are well-known, conventional components very frequently used for processing of received wireless signals, and below I provide a number of references that describe receivers containing such components. A low noise amplifier is needed to amplify low-power signals, since signal attenuation is a very common occurrence when receiving wireless signals over an antenna—the amplification is needed to properly process the received signal. Down-converters are needed because the received signal is an up-converted, modulated signal, usually up-converted from a baseband frequency (the frequency of the original digital signal) to an RF frequency for wireless transmission. Down-conversion restores the signal back to its original baseband signal which, as discussed above, is easier and faster to process and is the original form of the signal—not a modulated signal. Finally, a filter is used to remove noise from the signal in order to condition it for analog-to-digital conversion. These are all well-known benefits that would have motivated a POSITA to incorporate Chen's receiver into Suzuki.

189. This process of using a low noise amplifier, down-converters, and a filter is in fact very common for receiving multi-carrier wireless signals and can be found throughout the literature, not just Chen. For example, U.S. Patent No. 7,136,430 ("Morris"), which was filed in 2003, explains that "on the receiver side, the traditional down-conversion chain" uses "various combinations of analog filters, amplifiers,

mixers and demodulators." Ex. 1010, 1:32-37. Thus, Morris Figure 6 depicts a "prior art analog receiver 600 of the type used in conventional digital communications systems" where digital processing of a received RF signal goes through a low noise amplifier 602, a downconverter 608, and then low pass filters 610. *Id.*, 9:49-10:16.

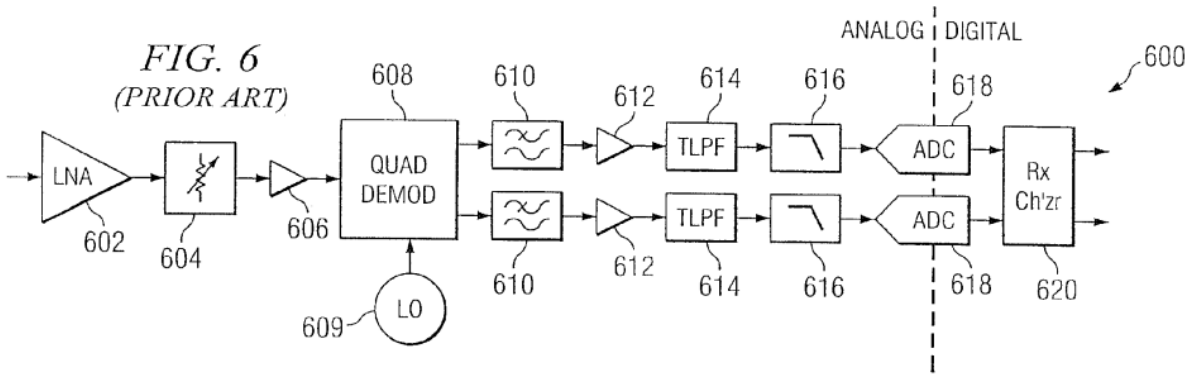

190. Another similar example is U.S. Patent No. 7,460,615 ("Kunysz"), filed in 2005, which teaches that a prior art receiver "has an antenna 102 which receives ranging signals in two frequency bands," with each band associated with a "downconverter stage" 106 and 160, respectively, as depicted in Figure 1. Ex. 1011, 5:6-43. Each downconverter stage has a low noise amplifier (114 and 162), a downconverter (120 and 163), and an intermediate frequency band pass filter (128 and 166). *Id.*

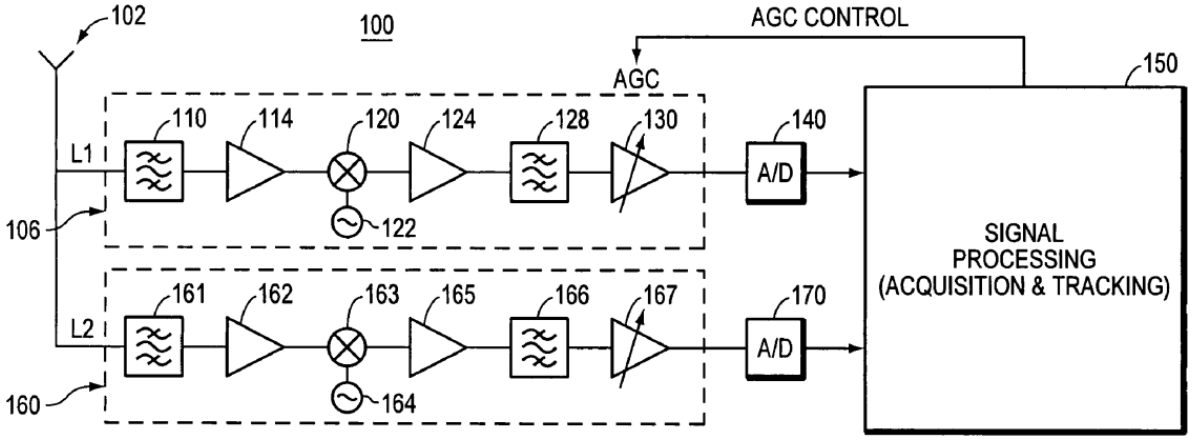

FIG. 1 PRIOR ART

191. Another similar example is U.S. Patent No. 7,133,697 ("Judd"), filed in 2002, which teaches a similar circuit in Figure 5 which receives a signal "from the antenna 14a" which is passed through "an amplifier, such as an LNA 93, RF-to-IF downconverter … circuitry 94, [and] an IF filter 96." Ex. 1012, 7:35-43.

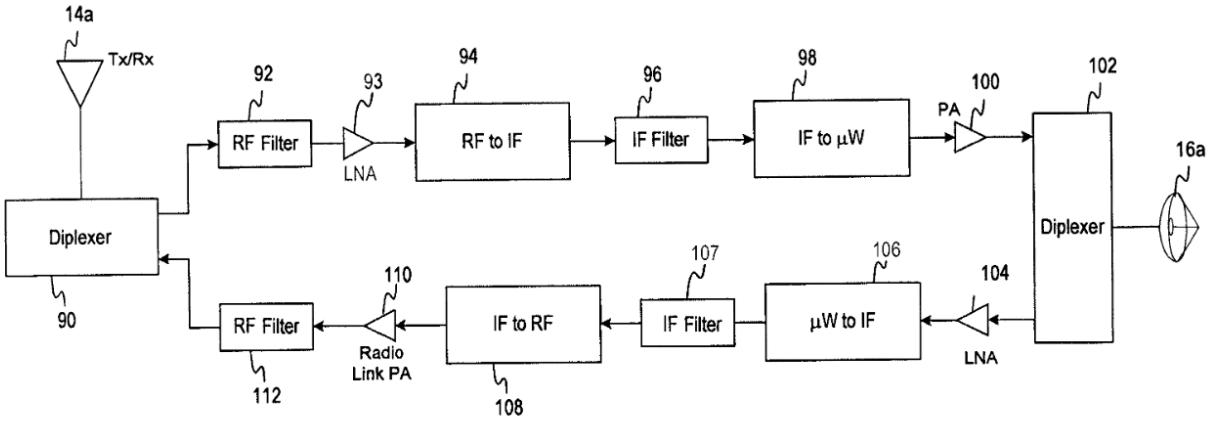

192. Chen is consistent with all of these prior art references. Chen discloses processing of received signals using a low noise amplifier, downconverters, and a filter. Thus, at the very least, the combination of Suzuki and Chen is simply the use of a well-

known technique to improve Suzuki and a combination of prior art elements according to known methods to yield predictable results.

193. Indeed, a POSITA would have considered the combination of Suzuki and Chen to have a reasonable expectation of succeed and to yield predictable results. Suzuki describes a transmitter whereas Chen describes a receiver. A POSITA would have reasonably expected Chen's receiver to receive and process Suzuki's wireless transmission. This is because Suzuki is directed to the transmission of multi-carrier wireless signals and Chen is directed to receiving multi-carrier wireless signals. To a POSITA, the combination would have yielded the predictable result of Chen's successful processing/demodulation of Suzuki's transmission.

194. Finally, it is my opinion that Suzuki, Chen and the '802 patent are all directed to the same field of endeavor. As explained above for Ground 3, Suzuki and the '802 patent are directed to multi-carrier transmissions. Chen is likewise directed to the same field of endeavor. Ex. 1009, Abstract ("In the present invention, high speed data is provided by transmitting data on multiple carrier frequencies …").

B. Claim 14

195. Claim 14 depends on Claim 10 and adds additional steps to the method claimed in Claim 10. But whereas Claim 10's steps describe the process of generating and ***transmitting*** a signal via one antenna, Claim 14's steps describe the process of a

different, second antenna ***receiving that signal*** and using various well-known components to process it.

14[pre]: The method of claim 10 wherein the second data is the same as the first data, the method further comprising:

196. In my opinion, to the extent this preamble is limiting, Suzuki and Chen render obvious this limitation. For ***"the second data is the same as the first data"***, please refer to my analysis for claim 7.

197. If Patent Owner argues that Suzuki does not disclose that the second data is the same as the first data, it is my opinion it would have been an obvious design choice (as I discussed in Ground 2) and also this limitation is rendered obvious in further view of Jalali. As discussed above in Ground 3, Jalali discloses that "the overall transmission channel is essentially divided into a number of (L) parallel sub-channels that are used to transmit the ***same or different data***." Ex. 1008, 8:50-53; *see also* 9:1-4 ("same data being transmitted on both sub-channels"). And as explained in Ground 3, a POSITA would have found it obvious to incorporate such teachings into Suzuki's transmitter (which, in my opinion, is equally applicable to the Suzuki-Chen combination).

14[a]: receiving the transmitted signal on a second antenna;

198. In my opinion, Suzuki and Chen render obvious this limitation. As I mentioned above, in the Suzuki-Chen combination, Chen's receiver receives Suzuki's multi-carrier transmission.

199. Chen discloses that it receives on a single antenna (*i.e.* ***second antenna***) a multi-carrier signal containing signals on several frequency bands—specifically, "Signals 250a, 250b, 250c and 252a [as depicted in Figure 5] are received at ***antenna 300***." Ex. 1009, 13:61-62. Thus, Chen's antenna is the claimed ***"second antenna,"*** and in the Suzuki-Chen combination, Chen's antenna receives the "transmitted signal" from Suzuki (as discussed above in claim 10).

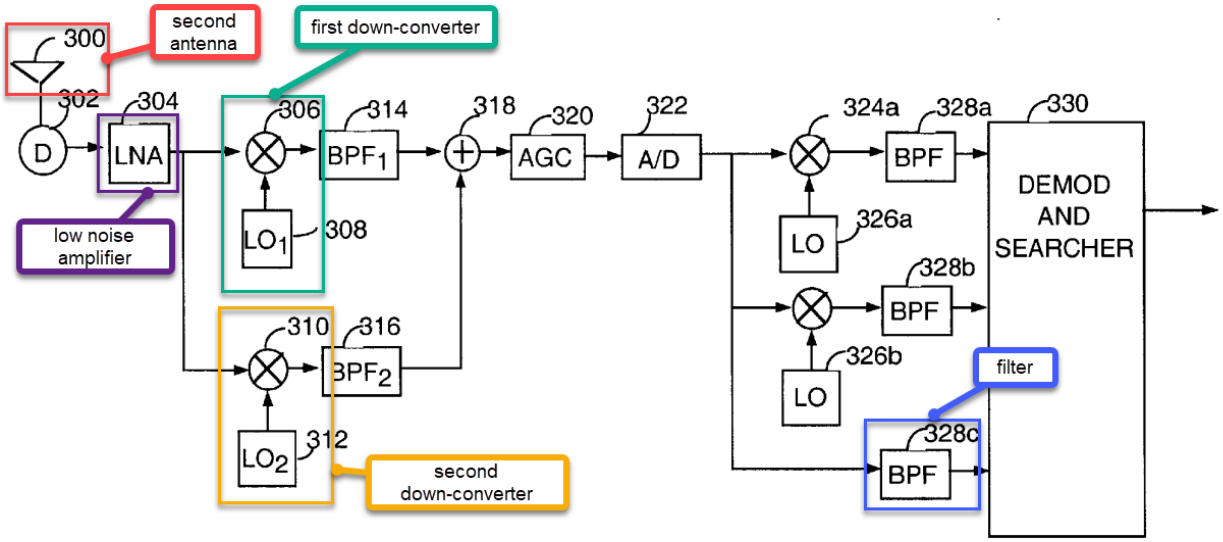

FIG. 6

200. The compatibility of Suzuki and Chen is supported by the fact that Chen discloses that signals 250a, 250b, 250c, and 252a are on different frequency bands and simultaneously transmitted and received. Ex. 1009, 13:43-50; Figure 5. Likewise, in the Suzuki-Chen combination, the received signal is as depicted in Suzuki's Figure 13A, which contains two simultaneous signals on different frequency bands. That Chen discloses four simultaneous signals whereas Suzuki discloses two makes no difference. Chen's Figure 6 shows hardware for processing two signals.

14[b]: amplifying the received signal in a low noise amplifier resulting in an amplified received up-converted signal, wherein the bandwidth of said low noise amplifier is greater than the difference between the lowest frequency in the first up-converted frequency range and the highest frequency in the second up-converted frequency range;

201. In my opinion, Suzuki in view of Chen renders obvious this limitation

202. With respect to the limitation ***"amplifying the received signal in a low noise amplifier resulting in an amplified received up-converted signal,"*** Chen discloses that in its receiver, the received signals are "provided … to ***low noise amplifier (LNA)*** 304" which outputs an ***amplified received up-converted signal*** because the signal from Suzuki is up-converted (as I explained above in Ground 2 for claims 10e and 10f). Ex. 1009, 13:60-62.

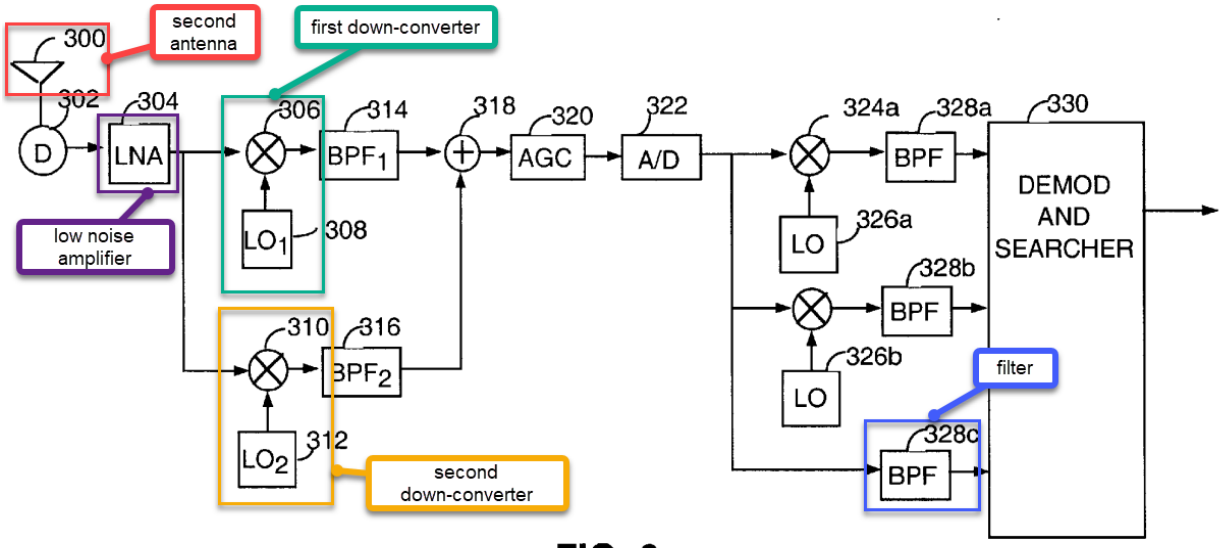

FIG. 6

203. With respect to the limitation ***"the bandwidth of said low noise amplifier is greater than the difference between the lowest frequency in the first up-converted frequency range and the highest frequency in the second up-converted***

frequency range," as I explained in Ground 2, Suzuki's predistorter transmits the signal depicted in Figure 13A. In Figure 13A, f1L is the ***"lowest frequency in the first up-converted frequency range"*** and f2H is the ***"highest frequency in the second up-converted frequency range***." The ***difference*** between f1L and f2H is the blue line.

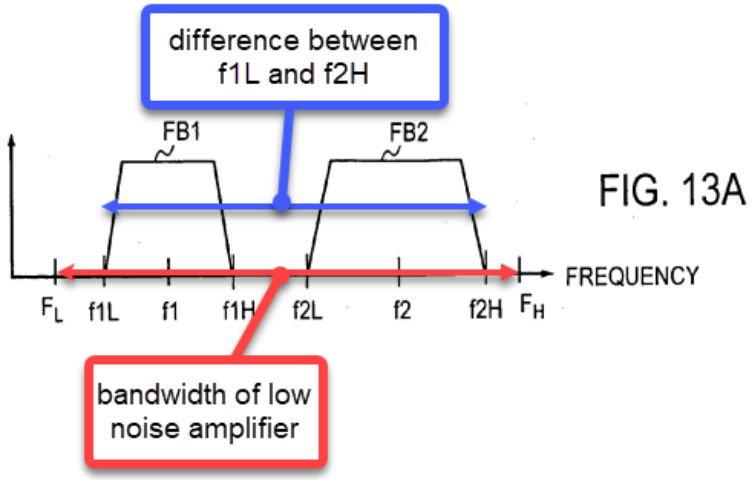

FIG. 13A

204. A POSITA would understand that the bandwidth of an amplifier, including a low noise amplifier, is at least the bandwidth of the signal it amplifies. A POSITA would further understand that the bandwidth of the signal is the width of the total frequency band which is marked in red in the above annotated Figure 13A. Chen describes amplifying multi-carrier transmissions that have a bandwidth of at least 78 MHz. Ex. 1009, 4:56-65 (first signal transmitted on 850 MHz frequency and third signal transmitted on 928 MHz frequency). This exceeds the bandwidth of the multi-carrier transmission in Suzuki. Ex. 1004, ¶93 ("bandwidth of … transmitting signal S_T is 15 MHz"). Thus, the bandwidth of the LNA is ***greater than*** the bandwidth of the difference between f1L and f2H.

14[c]: down-converting the amplified received up-converted signal using a first down-converter and a signal corresponding to the first RF center frequency to produce a fourth analog signal corresponding to the first analog signal; and

205. In my opinion, Suzuki in view of Chen renders obvious this limitation.

206. With respect to the limitation ***"down-converting the amplified received up-converted signal using a first down-converter … to produce a fourth analog signal,"*** Chen discloses that in its receiver system, mixer 306 is the ***first down-converter*** and it ***down-converts*** the amplified signal to produce a wide baseband signal (***a fourth analog signal***). Specifically, "[t]he amplified signal [***amplified received up-converted signal***] is provided to mixer 306" (***first down-converter***) which "***down converts*** the signal in accordance with a signal provided by local oscillator, which brings the 5 MHz band consisting of carriers 250a, 250b and 250c down to a MHz wide baseband signal [***fourth analog signal***]." Ex. 1009, 13:63-66.

207. With respect to the limitation ***"down-converting … using … a signal corresponding to the first RF center frequency,"*** in my opinion, a POSITA would understand that the mixer's use of a "signal provided by local oscillator" is the mixer performing down-conversion using a ***signal corresponding to the first RF center frequency*** because in a conventional down-converter, it is the local oscillator which shifts the input signal's frequency center to a lower frequency center and, in order to do so, the local oscillator's signal must correspond with the frequency center of the signal it is downconverting. Ex. 1023, 102 ("To ensure ***identical carrier frequencies***

at the transmitter and the receiver, we can use quartz crystal oscillators, which generally are very stable. Identical crystals are cut to yield the same frequency at the transmitter and the receiver."); Ex. 1009, 13:60-14:6 (downconverting using a signal from local oscillator 308).

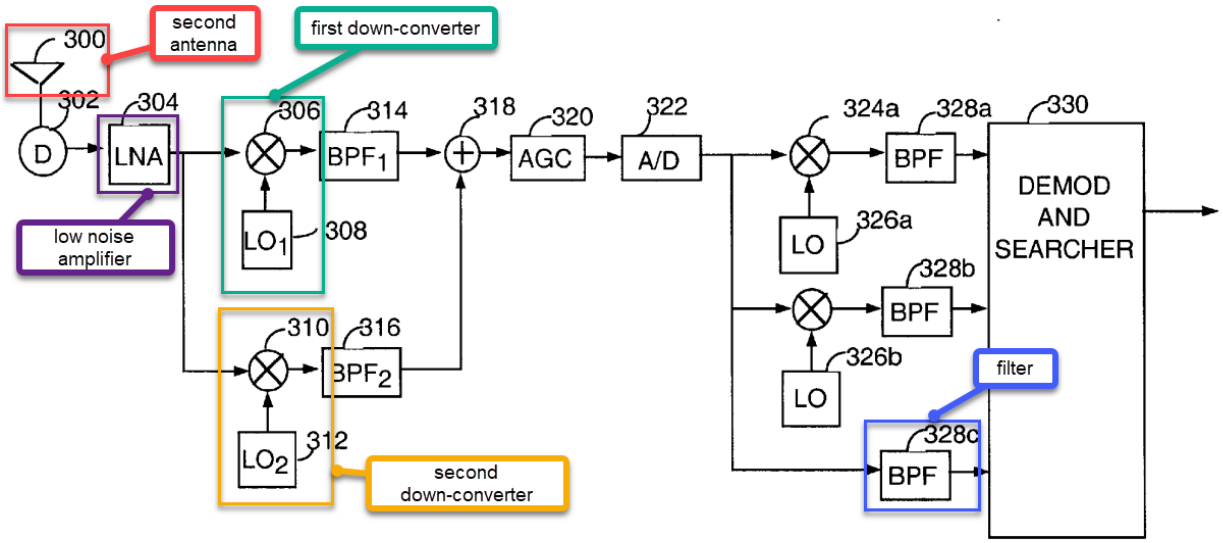

FIG. 6

208. With respect to the limitation ***"fourth analog signal corresponding to the first analog signal,"*** in the Suzuki-Chen combination, mixer 306 (***first down-converter***) down-converts the signal at the first frequency range (red line in Figure 13A below), which was generated from the ***first analog signal***, as I discussed in claim 10c and 10e for Ground 2. Thus, the baseband signal produced by the first-downconverter is a ***fourth analog signal that corresponds to the first analog signal*** (*i.e.*, the fourth analog signal is the received version of the first analog signal, which was included in the transmission that was received).

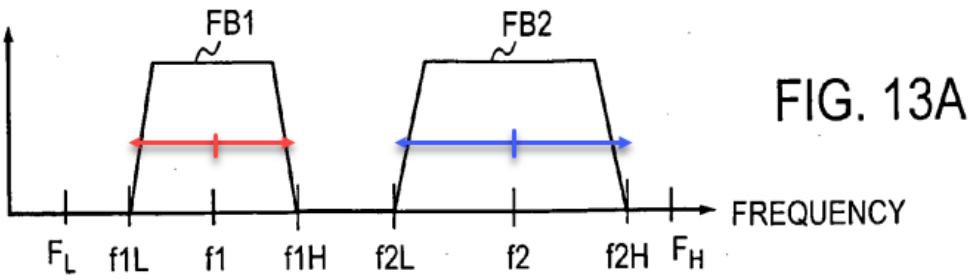

14[d]: down-converting the amplified received up-converted analog signal using a second down-converter and a signal corresponding to the second RF center frequency to produce a fifth analog signal corresponding to the second analog signal.

209. In my opinion, Suzuki in view of Chen renders obvious this limitation.

210. With respect to the limitation ***"down-converting the amplified received up-converted analog signal using a second down-converter … to produce a fifth analog signal,"*** Chen discloses that in its receiver system, the ***amplified received up-converted signal*** "is also provided to downconverter 310 [***second down-converter***] which brings the signal carried on carrier 252a down to base band [***fifth analog signal***]." Ex. 1009, 14:1-3.

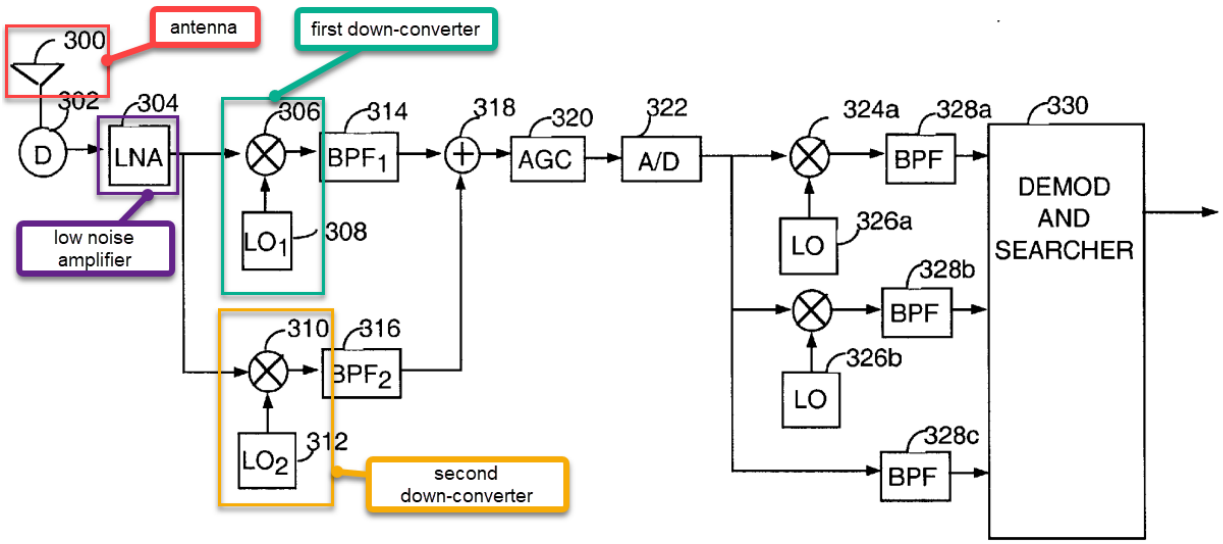

FIG. 6

211. With respect to the limitation ***"down-converting … using … a signal corresponding to the second RF center frequency,"*** Figure 6 of Chen also depicts that second downconverter 310 receives a signal from a second local oscillator 312, which a POSITA would understand is a ***signal corresponding to the second RF center frequency*** because, as I explained above, the local oscillator's signal must correspond with the frequency center of the signal it is downconverting.

212. With respect to the limitation ***"fifth analog signal corresponding to the second analog signal,"*** in the Suzuki-Chen combination, downconverter 310 (***second down-converter***) downconverts the signal at the second frequency range (blue line in Figure 13A below), which was generated from the ***second analog signal***, as I discussed in claim 10d and 10f above in Ground 2. Thus, the baseband signal produced by the second downconverter is a ***fifth analog signal that corresponds to the second***

analog signal (*i.e.*, the fifth analog signal is the received version of the second analog signal, which was included in the transmission that was received).

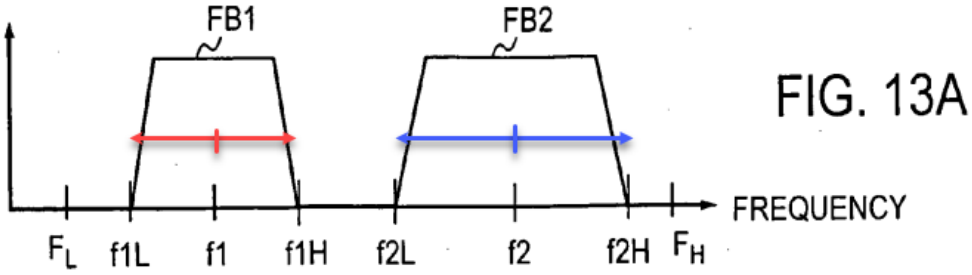

FIG. 13A

C. Claim 24

24[pre]: An electronic circuit comprising:

213. In my opinion, to the extent the preamble is limiting, a POSITA would understand that Chen's Figure 6 is a "block diagram" of an electronic circuit, because it contains circuit components such as an amplifier, downconverters and filters. Ex. 1009, 3:8-10.

> ***24[a]: a first down-converter circuit having a first input coupled to receive a first up-converted signal, a second input coupled to receive a first demodulation signal having a first RF frequency, and an output, wherein the first down-converter circuit outputs a first down-converted signal on the first down-converter output;***

214. In my opinion, Suzuki and Chen render obvious this limitation for similar reasons I gave above for claim 14[c].

215. In the Suzuki-Chen combination, Chen's mixer 306 (***first down-converter circuit***) receives an amplified signal containing Suzuki's signal on the first frequency range in Figure 13A (***first input of a first up-converted signal***) and a local

oscillator signal (***second input***). The local oscillator signal is a ***demodulation signal having a first RF frequency*** because the local oscillator shifts the higher frequency center to a low frequency center—in the Suzuki-Chen combination, it will shift Suzuki's first RF frequency center to a baseband frequency center. Figure 6 also depicts that mixer 306 outputs a down-converted signal.

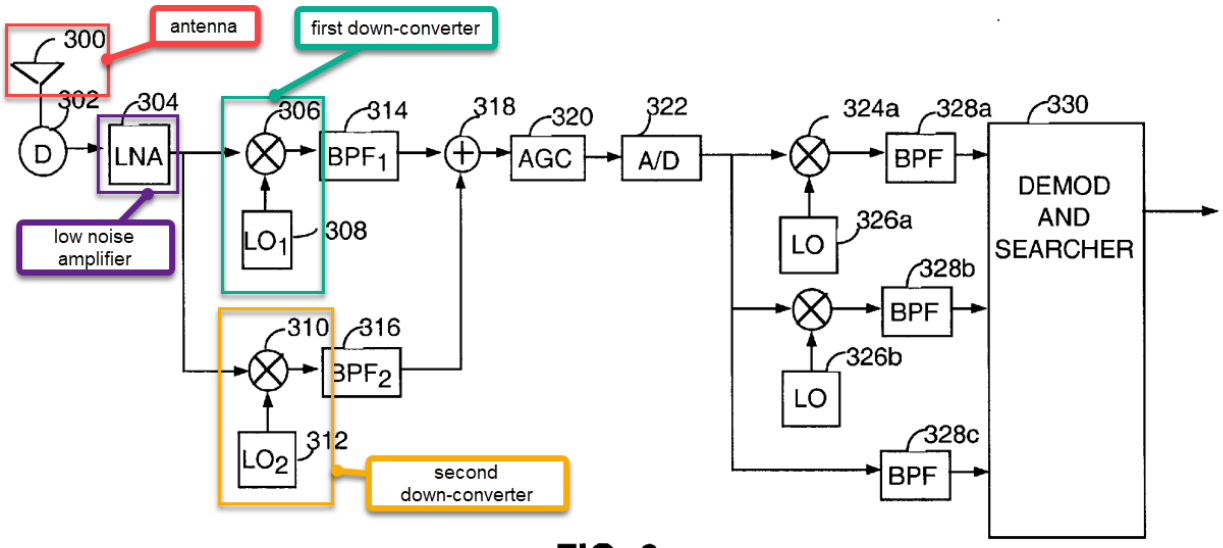

FIG. 6

24[b]: a second down-converter circuit having a first input coupled to receive the first up-converted signal, a second input coupled to receive a second demodulation signal having a second RF frequency different than the first RF frequency, and an output, wherein the second down-converter outputs a second down-converted signal on the second down-converter output, wherein the first up-converted signal comprises a first signal modulated at the first RF frequency and a second signal modulated at the second RF frequency; and

216. In my opinion, Suzuki in view of Chen render obvious this limitation

217. With respect to the limitation ***"a second down-converter circuit having a first input coupled to receive the first up-converted signal, a second input***

coupled to receive a second demodulation signal having a second RF frequency different than the first RF frequency, and an output, wherein the second down-converter outputs a second down-converted signal on the second down-converter output," I believe it is rendered obvious for similar reasons I made for claim 14[d] above.

218. Chen's Figure 6 depicts downconverter 310 as having two inputs: the amplified signal (***first input***) and a second local oscillator (***second input***). For the reasons discussed in claim 14c, the local oscillator provides a demodulation signal having a second RF frequency, this time in order to downconvert the signal at the second frequency range (***a second RF frequency different than the first RF frequency***) in Figure 13A of Suzuki.

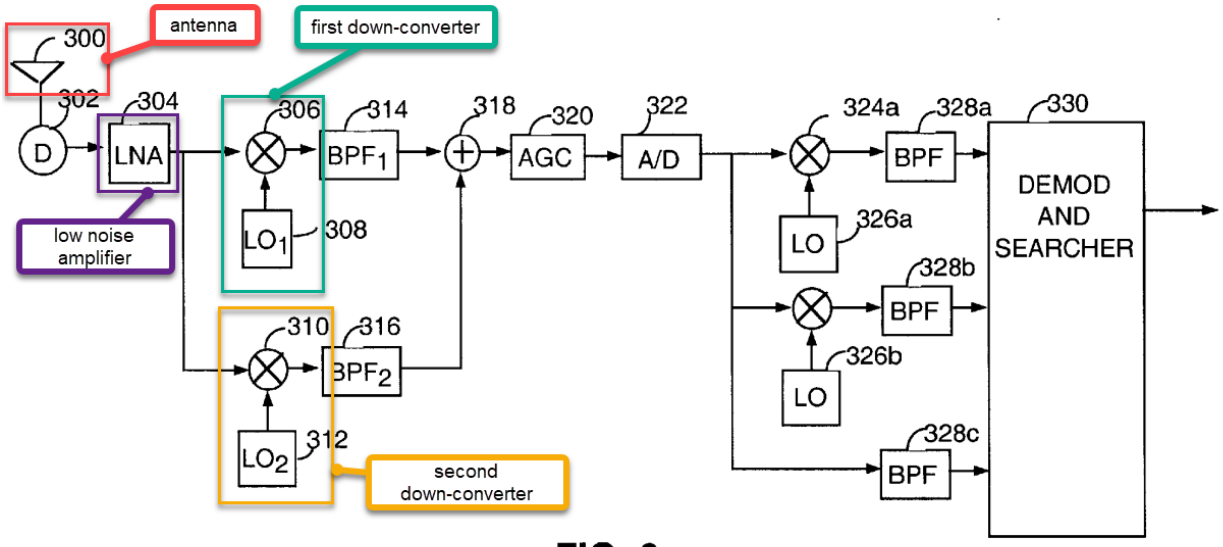

FIG. 6

219. With respect to the limitation ***"wherein the first up-converted signal comprises a first signal modulated at the first RF frequency and a second signal***

modulated at the second RF frequency," the up-converted signal is the amplified signal received by antenna 300. In the Suzuki-Chen combination, this antenna receives the signal transmitted by Suzuki as depicted in Figure 13A. This signal has a first and second signal modulated at different RF frequencies, as discussed in Ground 2 for claims 1 and 10.

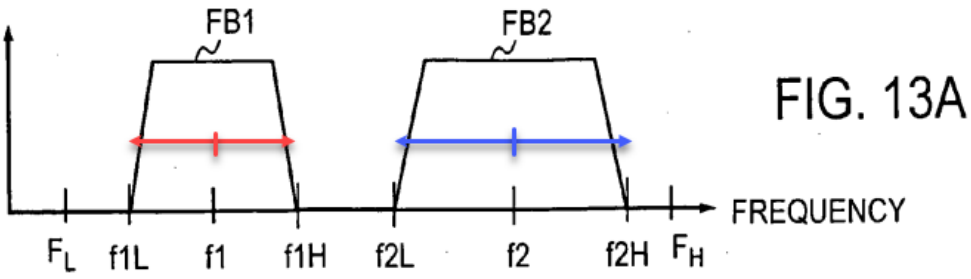

FIG. 13A

24[c]: a filter having an input coupled to the output of the first down-converter and the output of the second down-converter, and in accordance therewith, the filter receives the first and second down-converted signals.

220. Chen discloses that the output of the mixer 306 and downconverter 310 are, after downconversion, "already at baseband" and "***provided directly*** to filter 328c." Ex. 1009, 14:13-15.

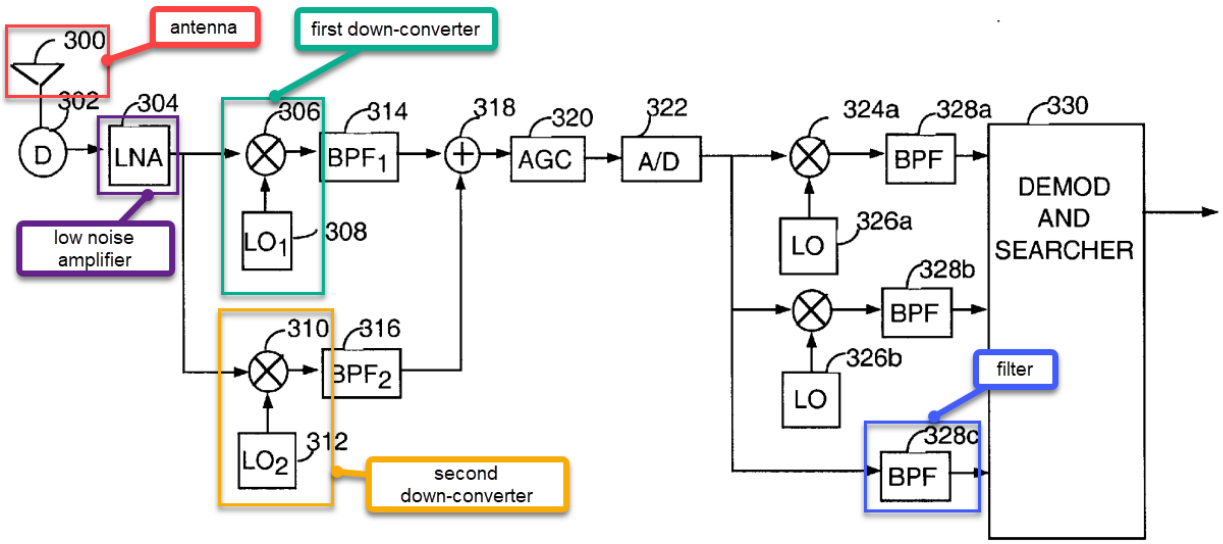

FIG. 6

XII. GROUND 5: SUZUKI IN VIEW OF ETEMAD RENDER OBVIOUS CLAIMS 6, 13, AND 21

221. Claims 6, 13, and 21 recite that the two information or signals that are combined into the transmitted signal are encoded using a "first wireless protocol" and a "second wireless protocol." I have already opined above in Ground 2 that Suzuki alone discloses these limitations.

222. However, I note that Patent Owner's infringement contentions from the litigation allege that "[t]he aggregation of low and mid-band carriers in <u>both Frequency Division Duplex (FDD)</u> and <u>Time Division Duplex (TDD)</u>" discloses claims 6, 13, and 21. Ex. 1013, 24 (emphasis in original). Thus, Patent Owner is asserting that FDD and TDD are different wireless protocols for which individual signals are used. Without providing an opinion on whether the plain meaning of this

limitation includes using FDD and TDD, under Patent Owner's apparent construction, the claims are rendered obvious by Suzuki in view of Etemad.

223. Etemad is directed to "[m]ulticarrier techniques for wireless communications." Ex. 1014, Abstract. In Etemad, a transmission has "the primary carrier with a first portion of a RF spectrum, and the secondary carrier with a second portion of the RF spectrum." *Id.*, 6:37-39. Etemad also discloses that "the primary carrier may utilize a Time Division Duplex (TDD) mode, while the secondary carrier provides Frequency Division Duplex (FDD) mode." *Id.*, 5:36-39. Thus, Etemad discloses a multicarrier signal where the first and second signals use different wireless protocols under Patent Owner's apparent construction. When combined with Suzuki, they render obvious claims 6, 13, and 21.

224. In my opinion, a POSITA would have been motivated to combine Suzuki and Etemad. As I discussed above, Suzuki teaches the transmission of multi-carrier signals and indicates that its system is applicable to multiple types of communications protocols, such as GSM, which includes TDM and FDM. Ex. 1024, 9:59. A POSITA would have been motivated to combine Suzuki with Etemad's teachings of using TDD and FDD for the different carriers within a multi-carrier signal.

225. A POSITA would have been motivated to make this modification because of the well-known benefits of using TDD/FDD in a multi-carrier signal. As explained by Etemad, using TDD/FDD can be responsive to "a given set of design and

performance constraints" for the system. Ex. 1014, 5:51-52. In other words, there are scenarios where using TDD and FDD would be optimal or highly beneficial. For example, TDD is useful for low bandwidth scenarios because it divides the resources by time. TDD also allows the use of the same RF spectrum for both upload and download by assigning certain time slots to upload or download, thus providing flexibility to systems which may have upload/download needs that frequently vary. TDD is especially useful for high-download scenarios, since the time resources can be allocated to mostly downloading. On the other hand, FDD is useful for simultaneous upload and download, since those channels can be assigned different frequency resources. It was generally known that FDD is better for coverage whereas TDD is better for capacity.

226. The above benefits of FDD and TDD together are why the European Telecommunications Standards Institute chose to include FDMA and TDMA in the GSM standard. Ex. 1024, 9:59. Suzuki itself recognized that its system is compatible with the GSM standard. Ex. 1004, ¶4. Thus, a POSITA would understand that these benefits of FDD and TDD are applicable to Suzuki and would have supported the combination of Suzuki and Etemad.

227. Given the variations of device needs within a network, a POSITA would understand it would be beneficial to be able to use TDD or FDD or both in a multi-carrier signal in order to accommodate the varying needs and constraints of a

particular network at a particular time with a particular traffic pattern. Thus, users who have high-download needs can be assigned a TDD carrier, whereas users who only have low-bandwidth needs could be assigned a FDD carrier. Given these well-known benefits from using TDD and FDD in a multi-carrier signal, a POSITA would have been motivated to incorporate Etemad's teachings into Suzuki.

228. In my opinion, a POSITA would have reasonably expected this combination to succeed. TDD and FDD had long been known in the field and a POSITA would have been familiar with its implementation, including as described by Etemad. Implementing TDD and FDD into Suzuki would have been well within the capabilities of a POSITA. Moreover, Etemad explicitly teaches that TDD and FDD are compatible with multi-carrier signals, which are also taught in Suzuki. In addition, as I explained above, Suzuki teaches that its system is compatible with GSM—which uses TDMA and FDMA. Thus, a POSITA would understand that TDD and FDD is compatible with Suzuki's system and reasonably expect the combination to succeed.

229. Finally, it is my opinion that Suzuki, Etemad, and the '802 patent are all directed to the same field of endeavor: the field of multi-carrier transmissions, that is, transmissions containing simultaneous signals using different frequency bands. Ex. 1014, Abstract ("Multicarrier techniques for wireless communications system are described.").

XIII. GROUND 6: FERNANDEZ IN VIEW OF MONTOJO RENDERS OBVIOUS CLAIMS 1-4, 6-8, 10, 13, 17, 21-22, AND 24

230. In this ground, I provide an independent reason for why some of the independent claims are obvious, based on the combination of Fernandez and Montojo.

231. Fernandez details prior art systems which generate a multi-carrier signal by combining multiple input signals into a single signal transmitted by a single antenna. Fernandez discloses the use of DACs and upconverters for each input signal and also describes that each input signal is amplified using its own power amplifier, rather than a single amplifier after the signals are combined. Montojo is yet another Qualcomm publication, this one directed to a multi-carrier transmitter with a single power amplifier, and methods of optimizing power apportionment across various multi-band signals to be simultaneously transmitted through its transmitter.

232. As discussed below, some of the claims require the use of a single amplifier—while this would have been obvious to a POSITA based on Fernandez alone, Montojo expressly discloses combining multiple signals into a single signal before amplifying using a single power amplifier. A POSITA would have found it obvious to combine Montojo's teaching of a single amplifier with Fernandez's system.

A. Rationale to Combine Fernandez and Montojo

233. In my opinion, a POSITA would have been motivated to combine Fernandez and Montojo.

234. A POSITA would have been motivated to combine Fernandez's parallel system for generating a multi-carrier signal with Montojo's teaching of a single amplifier that amplifies a signal after it has been combined into a multi-carrier signal, as well as Montojo's single antenna for transmitting the amplified signal. Fernandez teaches that wireless signals are generated for a particular frequency range using a "prior art signal generating system 10" for each frequency range, which are then combined at summing circuit 21, as shown in Figure 2A below. Each of these signal generating system performs its own amplification. As discussed below, a POSITA would have found it obvious to modify Fernandez to use Montojo's single amplifier instead of having each signal generating system perform its own amplification.

FIG. 2A

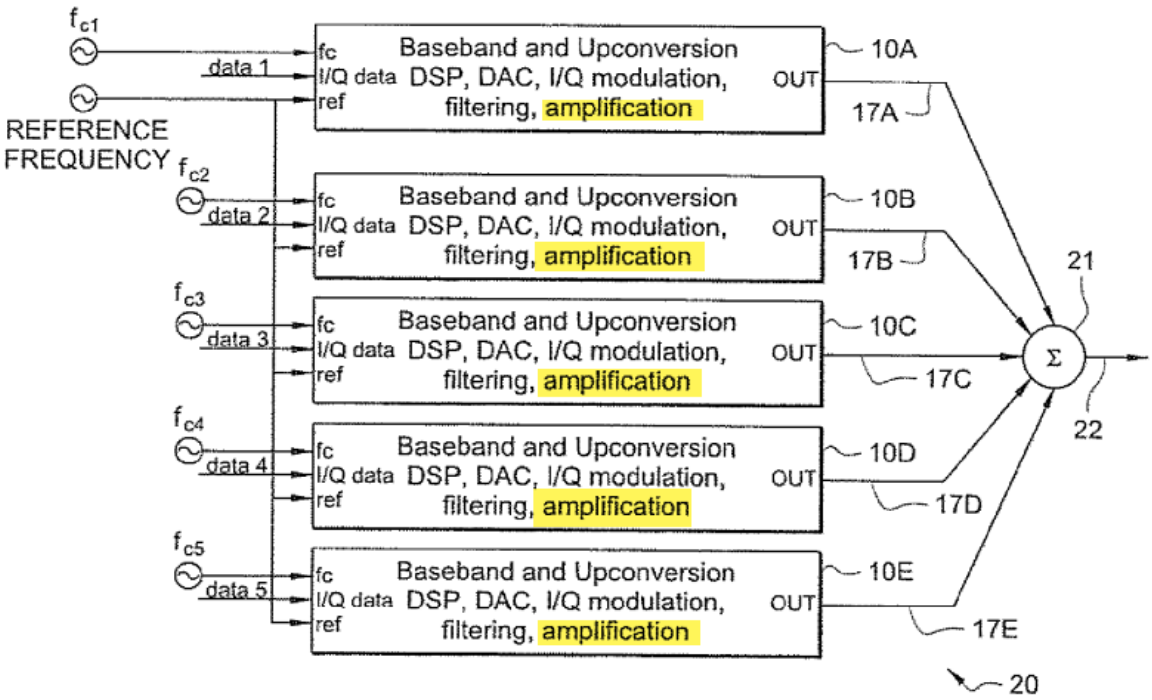

235. A POSITA would have been motivated to make this modification because of the well-known benefits of using a single amplifier to amplify signals within a multi-carrier wireless signal. As an initial matter, a POSITA would have been motivated to use a single amplifier based on Fernandez's disclosure alone. A single amplifier has a number of advantages compared to using multiple amplifiers, including lower complexity, a single (as opposed to multiple) potential point of failure, and lower cost. A POSITA in light of Fernandez's disclosure alone would have found it to be a simple matter of design preference to use a single amplifier as opposed to dual amplifiers.

236. These well-known benefits are further underscored by Montojo's teachings. For example, Montojo teaches generating a multi-carrier signal and explains that while "multiple power amplification circuits, each dedicated to one carrier and each including a power amplifier" is an option, this runs against "limitations on space, manufacturing cost, power consumption and other factors," which "dictate the need to share resources among the carriers, including power amplification circuitry." Ex. 1006, ¶5. Thus, Montojo teaches "***it would be advantageous*** to utilize a ***single power amplifier*** for transmission of a plurality of carriers transmitted by a multi-carrier terminal." *Id*. A POSITA would have known that, by using a single amplifier, this would result in the aforementioned benefits, including lower complexity, a single (as opposed to multiple) potential point of failure, and lower cost. Other benefits to a

single amplifier include a reduction in space usage and power consumption. Montojo is therefore dedicated to teaching how to use a single power amplifier for multi-carrier transmissions. Montojo's single amplifier system is shown, for example, in the following Figure 5 which I have annotated below.

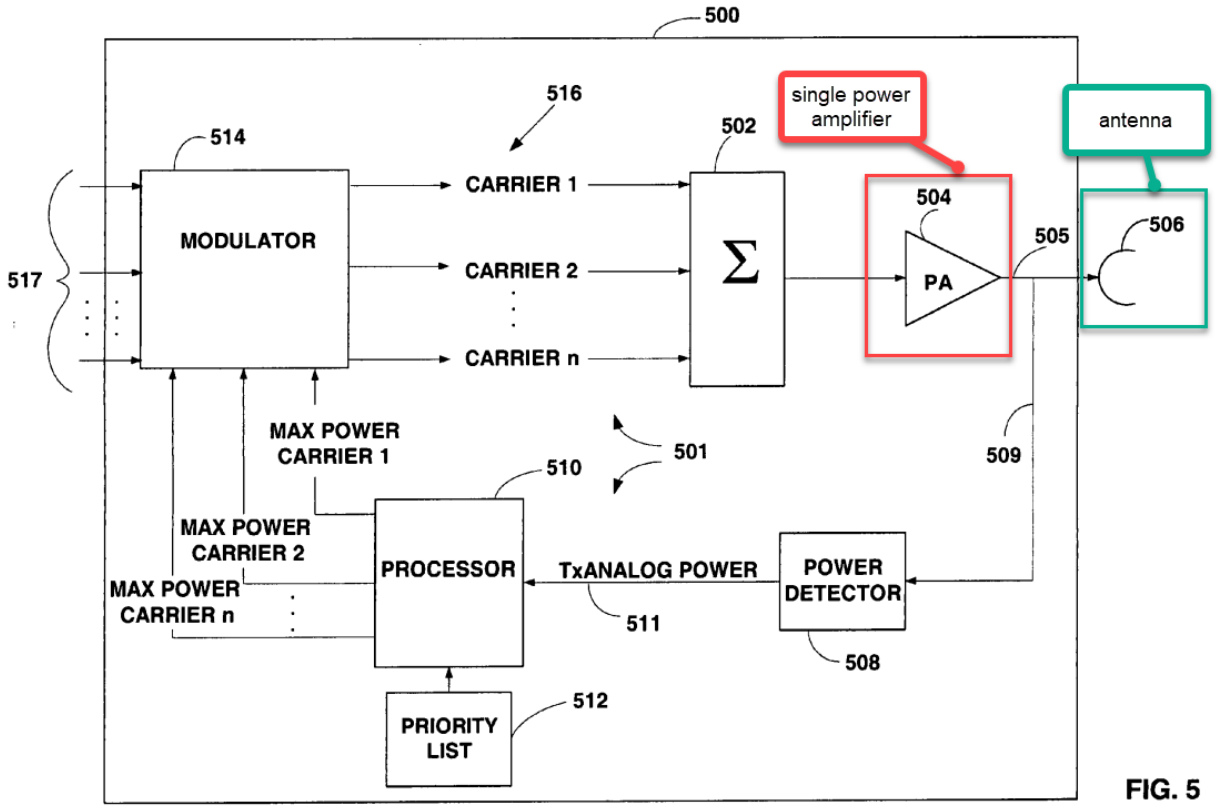

FIG. 5

237. It is also my opinion that a POSITA would have reasonably expected modifying Fernandez to use a single amplifier and single antenna based either on Fernandez's disclosure alone or in combination with Montojo's teachings to succeed. Using a single power amplifier was a well-known method in the art, as shown by Montojo. Suzuki, discussed above, likewise uses a single power amplifier for multi-

carrier transmissions. *See* Ex. 1004, Figs. 5-9. Moreover, Montojo teaches how to implement a single power amplifier for multi-carrier transmissions. *See, e.g.*, Ex. 1006, ¶¶21, 42, Fig. 5. Implementing Montojo's single power amplifier and single antenna in Fernandez would have been well-within the ordinary skill of a POSITA. I have provided below a revised version of Fernandez Figure 2A, which shows one way to modify Fernandez in view of Montojo by removing the amplification from each of Fernandez's signal generators and including Montojo's single power amplifier and antenna. Moreover, by the time of the '802 patent, power amplifiers that could amplify the wideband multi-carrier signals of WiMAX and UWB (as mentioned by Fernandez) were widely available. *Id.* For example, Exhibit 1025 describes a power amplifier for WiMAX applications which can handle the "full 3.3 to 3.8 GHz band with flat RF performances," exceeding the bandwidth discussed in Fernandez (500 MHz). Ex. 1025; Ex. 1006, ¶4.

FIG. 2A

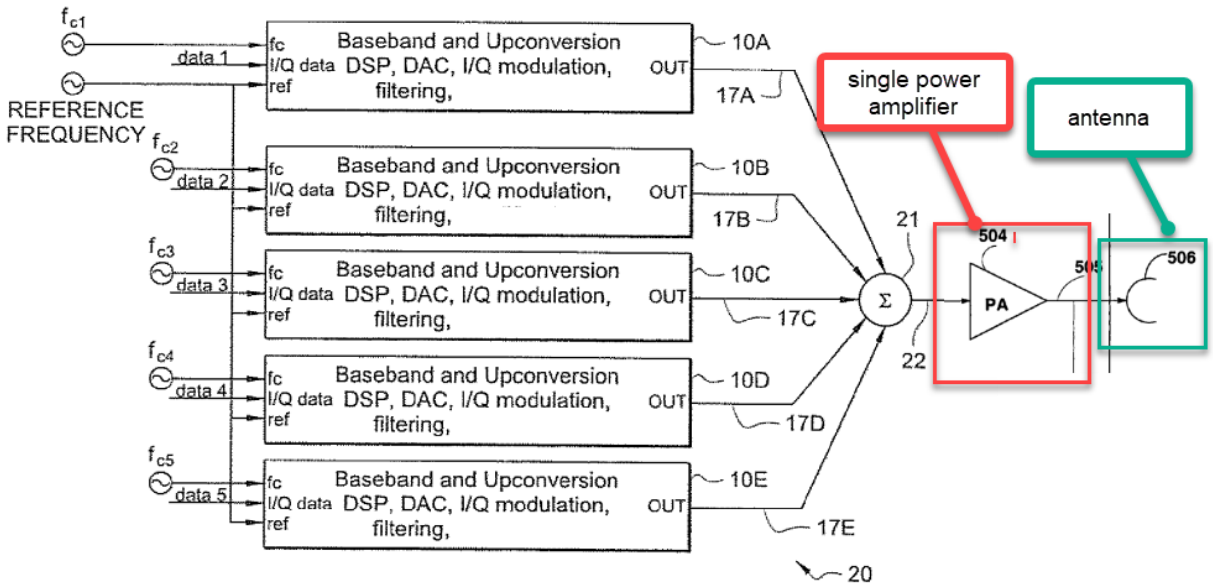

238. In addition, it is also my opinion that Fernandez and Montojo are directed to the same field of endeavor: the field of multi-carrier transmissions, that is, transmissions containing simultaneous signals using different frequency bands. Ex. 1001, Abstract ("Embodiments of the present invention transmit signals simultaneously over a communication channel at different RF center frequencies"); Ex. 1005, ¶8 ("[S]umming the output of multiple signal generators is a common technique to create multi-carrier wireless signals."); Ex. 1006, Abstract ("[A] multi-carrier access terminal having a transmitter with a single power amplifier … for a multi-carrier signal").

B. Claim 1

1[pre]: A method of transmitting information in a wireless communication channel comprising:

239. In my opinion, to the extent the preamble is limitation, Fernandez in view of Montojo renders obvious this limitation. For example, Fernandez discloses that "summing the output of multiple ***signal generators*** is a common technique to create multi-carrier ***wireless signals***." Ex. 1005, ¶8.

1[a]: transmitting first information across a first frequency range using a wireless transmitter, the first frequency range having a first center frequency, a first highest frequency, and a first lowest frequency; and

240. In my opinion, Fernandez in view of Montojo renders obvious this limitation. For example, Fernandez discloses multiple "signal generators" which receive "data" as input. Ex. 1005, ¶8; Fig. 2A. "data 1" as depicted in Figure 2A is the ***first information***. The signal generator converts the data to an "RE signal[] 17A" (***first frequency range***) which is part of the "multi-carrier wireless signal 22," as depicted in Figure 2B. *Id.* ¶8 ("***information content*** at one carrier frequency"), Fig. 2B. In the Fernandez-Montojo combination, this signal is transmitted by an antenna, *i.e.* ***wireless transmitter***.

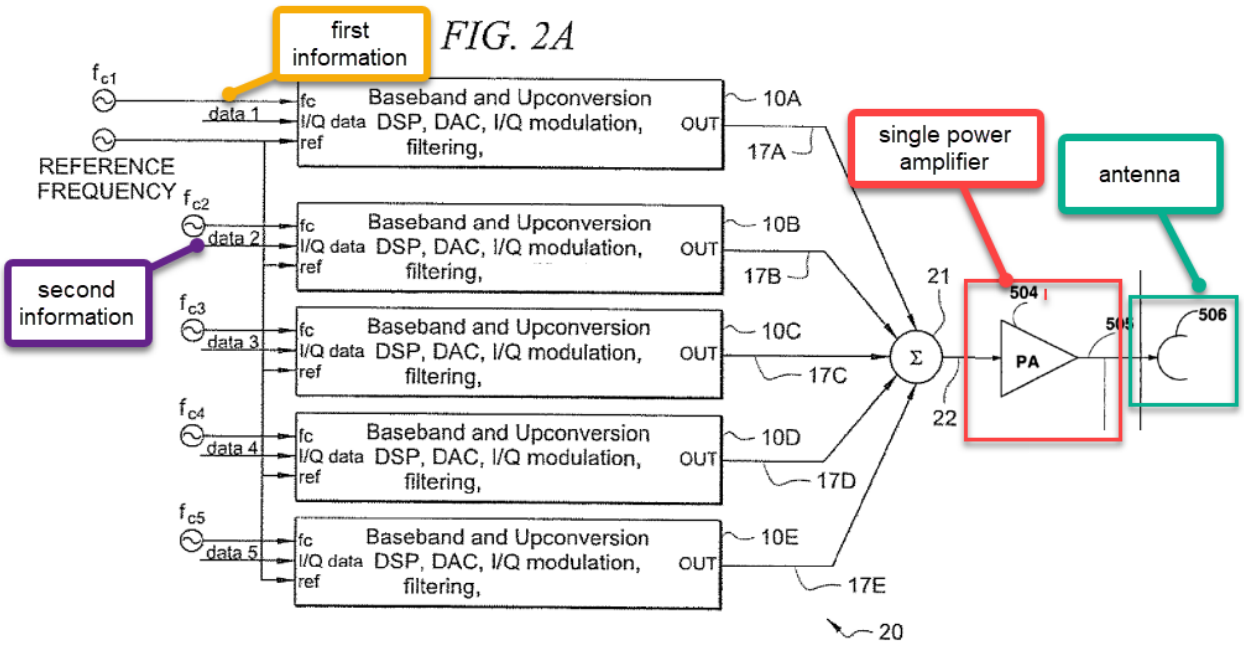

241. Signal 17A is the ***first frequency range*** and has a center frequency of f_{c1}. Fernandez specifically says the signal generator upconverts the signal to be "***centered*** at frequency" f_{c1}. Ex. 1005, ¶5. Fernandez also refers to this as the carrier frequency, which as I explained above refers to the frequency range's center. That is because when the carrier frequency is modulated, the resulting modulated signal is centered on that carrier frequency. As depicted in Figure 2B, 17A has a ***first highest frequency*** and a ***first lowest frequency***.

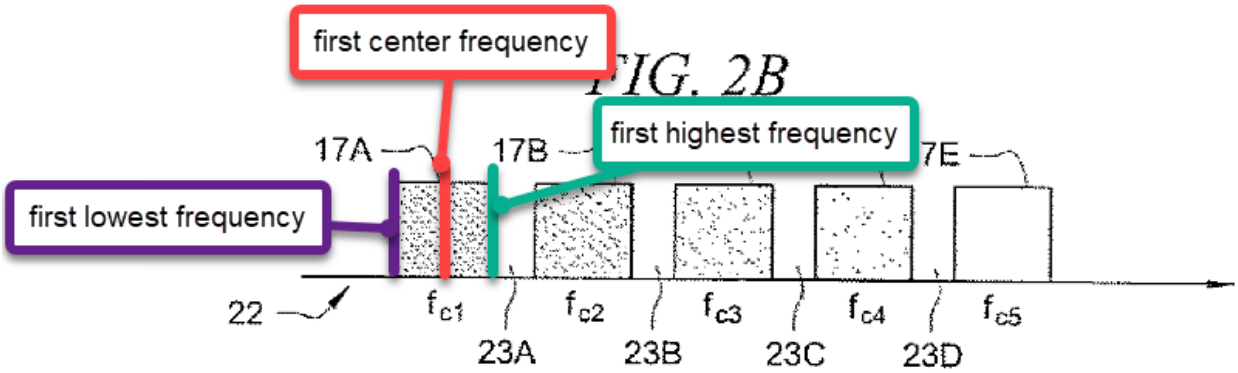

1[b]: simultaneously transmitting second information across a second frequency range using the same wireless transmitter, the second frequency range having a second center frequency greater than the first center frequency, a second highest frequency, and a second lowest frequency.

242. In my opinion, Fernandez in view of Montojo renders obvious this limitation.

243. Fernandez discloses a "data 2" (***second information***) which is converted into an "RE signal[] 17B" (***second frequency range***) that is part of "the multi-carrier wireless signal 22." Ex. 1005, ¶8; Fig. 2A.

244. With respect to the limitation of "***simultaneously transmitting … using the same wireless transmitter***," the '802 patent describes that one embodiment within the scope of this claim involves "transmit[ting] the digital data simultaneously as an electromagnetic signal using two different carrier frequencies." Ex. 1001, 11:18-20. And as I discussed in Ground 2, a POSITA would understand "simultaneously transmitting" information to include transmitting the information on a single signal over a single antenna. *See, e.g.*, Ex. 1021, 3:13-24, 4:50-51, Fig. 1.

245. Without providing an opinion on the full scope of the plain meaning of the term or that it can even be defined, Fernandez similarly discloses that the RE signals are combined into a single signal. Ex. 1005, ¶8 ("Such signals 17A-17E are summed by summing circuit 21 to generate ***a*** multi-carrier wireless signal 22."). In the Fernandez-Montojo combination, this signal is sent over a single antenna, as discussed above.

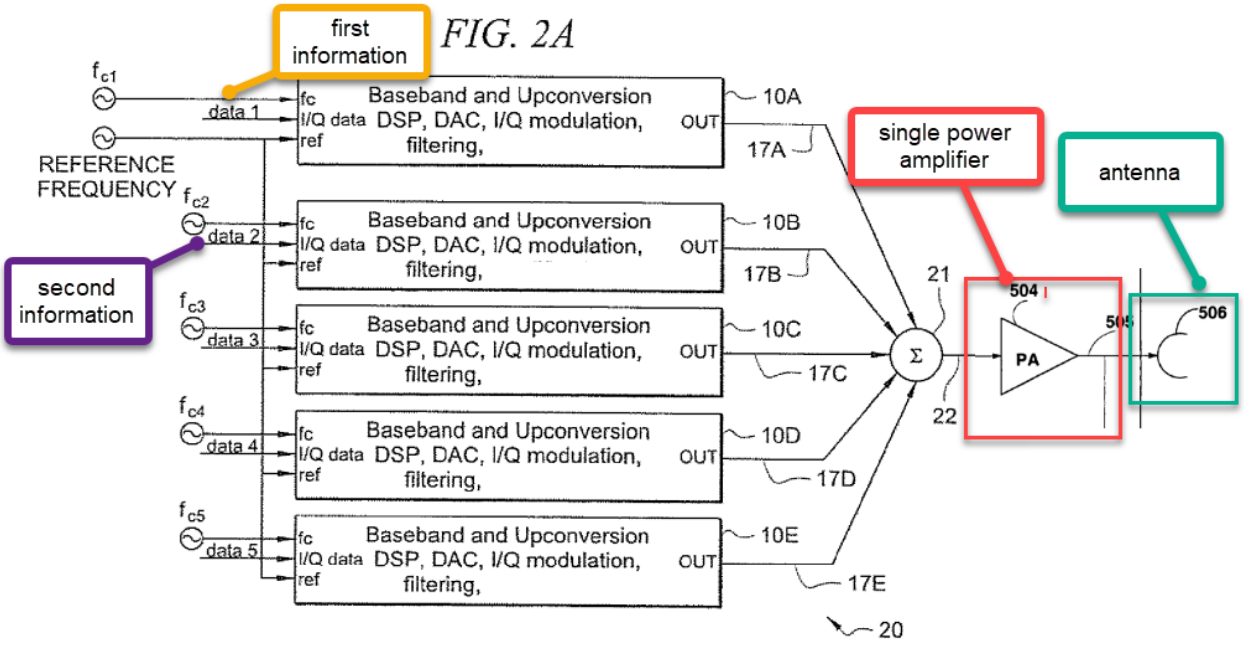

246. Figure 2B depicts a multi-carrier signal that simultaneously transmits frequency ranges 17A (***first frequency range***) and 17B (***second frequency range***). *Id.* Frequency range 17B has a center frequency f_{c2}, which is greater than the first center frequency f_{c1}. Again, f_{c2} is understood as the carrier frequency, which a POSITA would understand to be the center frequency for reasons I explained above. And Fernandez says the signal generator upconverts the signal to be "***centered*** at frequency" f_{c2}. Ex. 1005, ¶5. Frequency range 17B also has a highest and lowest frequency.

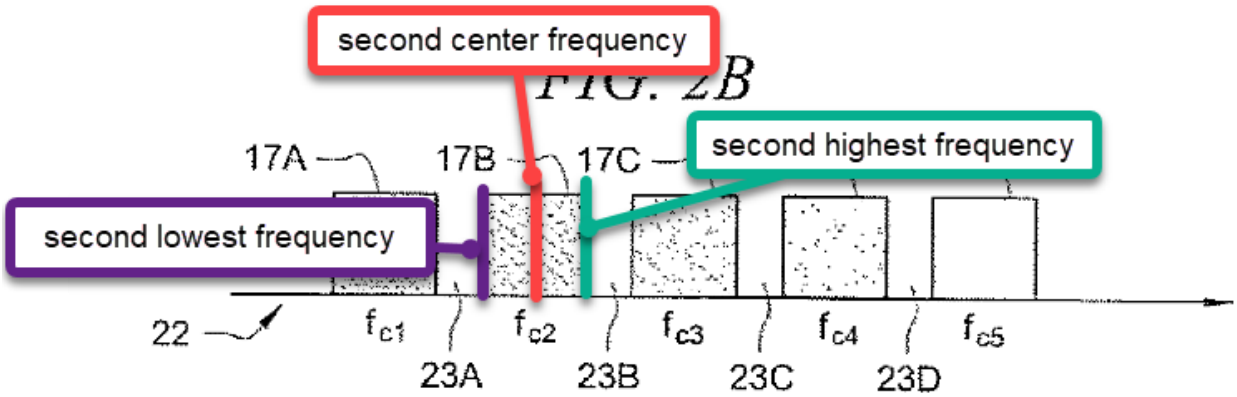

C. Claim 2: The method of claim 1 wherein frequency difference between the first center frequency and the second center frequency is greater than the sum of one-half the first frequency range and one-half the second frequency range.

247. As I explained above in Ground 2, this limitation requires that the there is a gap between the first and second frequency ranges. Fernandez in view of Montojo renders obvious this limitation, in my opinion.

248. Fernandez teaches that "as illustrated in FIG. 2B**,** such a multi-carrier wireless signal 22 … ***contains "holes" in the spectrum,*** and the sub-carriers do not necessarily share a fixed magnitude and phase relationship. For instance, as shown in FIG. 2B, the generated signal 22 contains the ***plurality of summed signals 17A-17E with holes 23A, 23B, 23C, and 23D interspersed between***." Ex. 1005, ¶8.

249. The presence of hole 23A means that the difference between ***first center frequency*** fc1 and ***second center frequency*** fc2 (red double arrow) is greater than the sum of one-half the ***first frequency range*** (17A) (purple arrow) and one-half

the ***second frequency range*** (17B) (green arrow), as depicted in the annotated version of Figure 2B below.

FIG. 2B

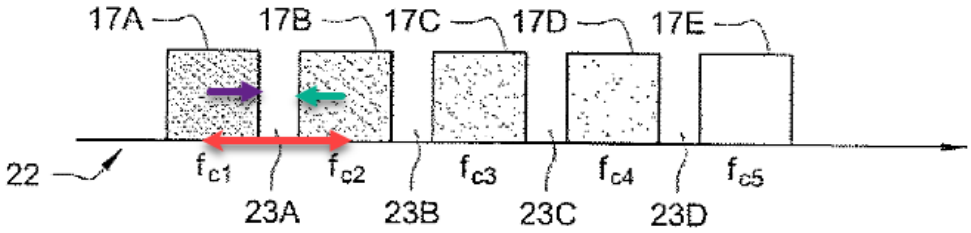

D. Claim 3: The method of claim 1 wherein the first and second information are transmitted using the same power amplifier in said wireless transmitter.

250. In my opinion, Fernandez in view of Montojo renders obvious this limitation.

251. Montojo's Figure 5 depicts multiple carrier signals being combined and then amplified with a ***single power amplifier*** that is then transmitted to an antenna 506. Ex. 1005, ¶42 ("[A] plurality of carriers … are summed by a signal combiner 502 which sums the carriers to produce a multi-carrier signal that is input to a power amplifier (PA) 504.").

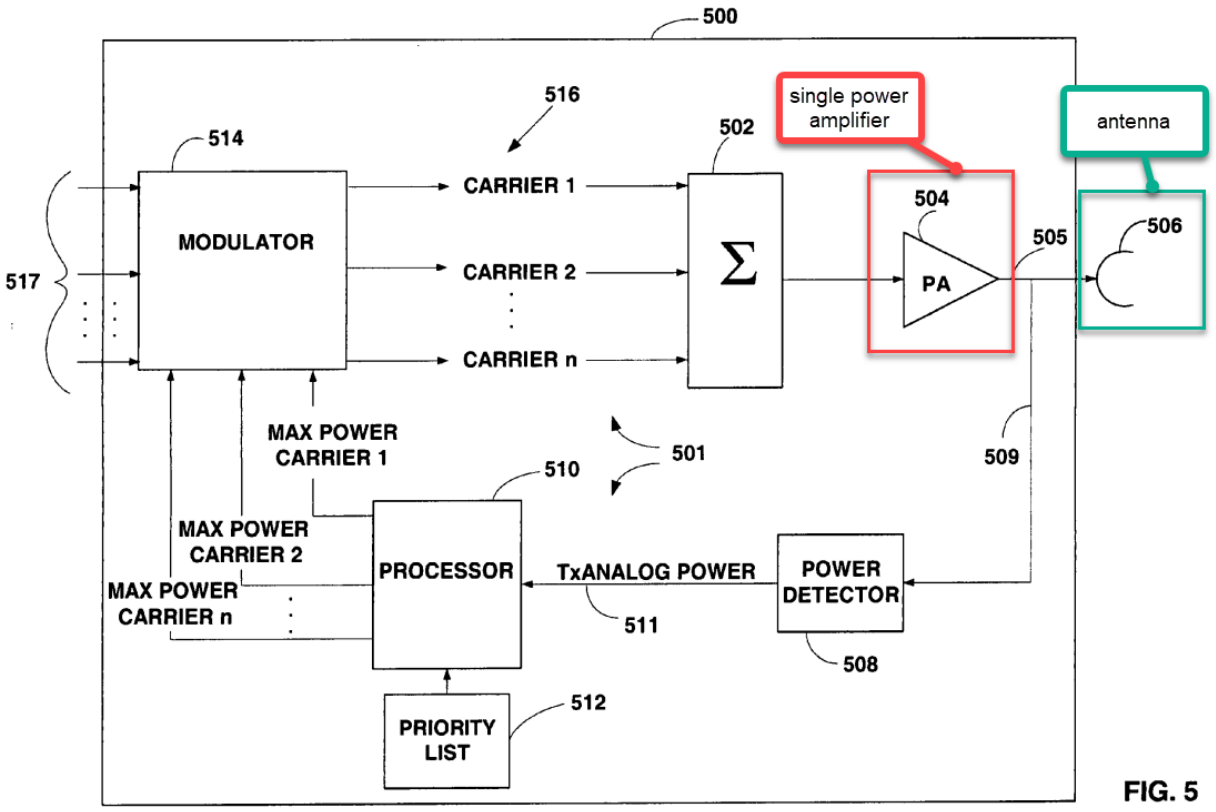

FIG. 5

252. As I discussed above, it would have been obvious to modify Fernandez to use Montojo's single power amplifier after generating each carrier signal from ***first and second information*** and combining them. A POSITA would understand that this power amplifier is ***in said wireless transmitter*** because it amplifies the signal that is then transmitted.

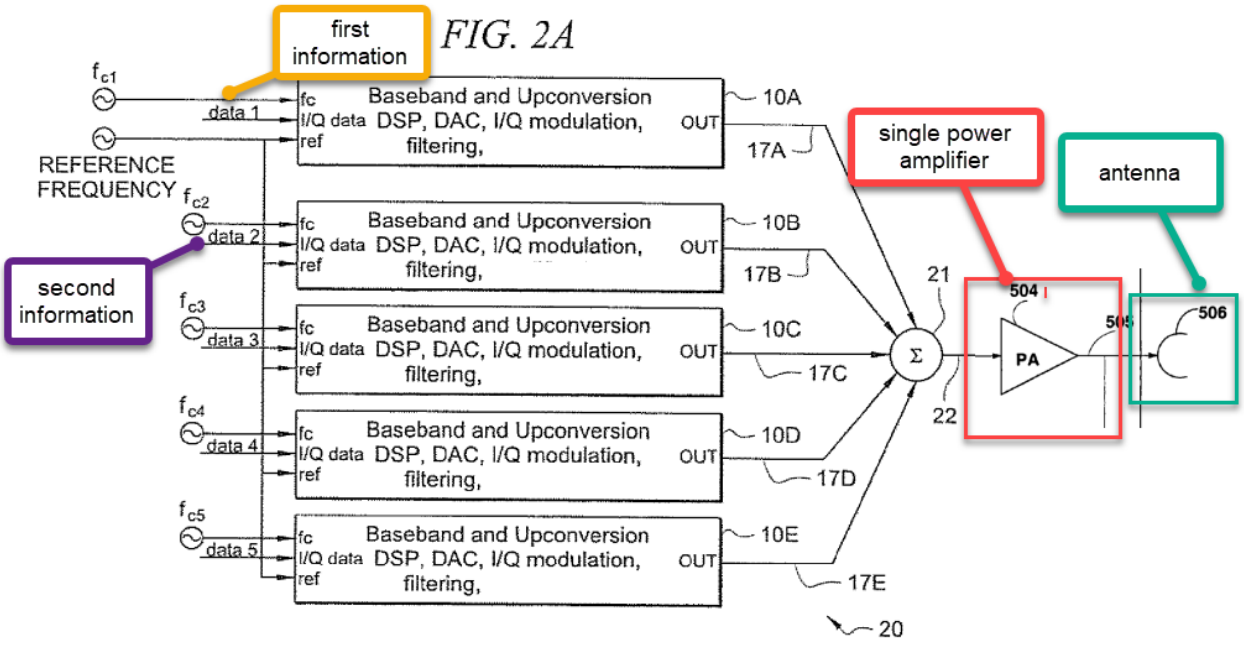

253. A POSITA would have also considered it obvious that the power amplifier is ***in the wireless transmitter***. A POSITA would understand that a wireless transmitter constitutes both a power amplifier and an antenna. It was common knowledge that a power amplifier converts low-power RF signals into a higher-power signal in order to drive the transmitting antenna. It was common for wireless transmitters to contain both a power amplifier and an antenna for transmission given the necessity to amplify the signal in order to drive the antenna. A POSITA would have reasonably expected a wireless transmitter containing a power amplifier and an antenna to succeed because such devices were common in the market.

E. Claim 4: The method of claim 3 wherein the bandwidth of said power amplifier is greater than the difference between the first lowest frequency and the second highest frequency.

254. In my opinion, Fernandez in view of Montojo renders obvious this limitation. Figure 2A of Fernandez depicts that the "wideband" signal 22 has a ***bandwidth*** (red line) that exceeds the ***difference between the lowest frequency of 17A and the highest frequency of 17B*** (blue line). Ex. 1005, ¶8. As I discussed above, a POSITA would further understand that the bandwidth of the power amplifier is at least the bandwidth of the signal it outputs, *i.e.* the red line in the annotated figure. In addition, as I explained above, a POSITA would understand that Montojo's power amplifier would have a wide enough bandwidth to amplify Fernandez's signals, especially since wideband amplifiers were well-known.

FIG. 2B

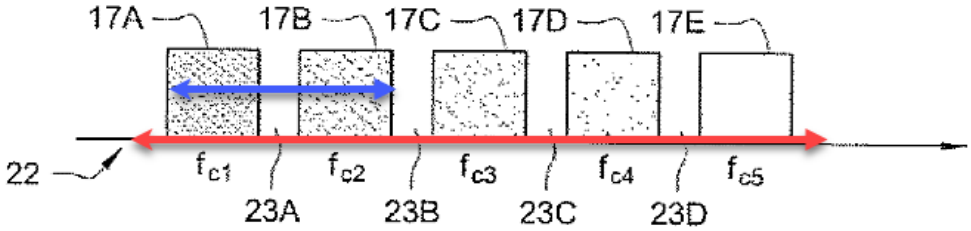

F. Claim 6: The method of claim 1 wherein the first information corresponds to a first wireless protocol and the second information corresponds to a second wireless protocol.

255. In my opinion, Fernandez in view of Montojo renders obvious this limitation. Fernandez teaches using different protocols such as WiMAX and Ultra-Wideband technology that each operate on a different frequency band. Ex. 1005, ¶¶3-

4. Fernandez also teaches that multi-carrier signals allow WiMAX "communication to appear as background noise that does not interfere with pre-existing wireless systems (as in UWB, discussed below)." *Id.* Thus, a POSITA would understand that WiMAX and UWB are ***different wireless protocols that operate on different frequency bands***. In fact, the '802 patent uses a similar example, stating that "ultra-wideband (UWB)" and "wireless local area network (WLAN) protocol" "may be used as the first protocol or second protocol." Ex. 1001, 7:67-8:2. A POSITA knew that WLAN includes WiMAX.

G. Claim 7: The method of claim 1 wherein the first information and the second information are the same data transmitted across two different frequencies.

256. In my opinion, Fernandez in view of Montojo renders obvious this limitation. For example, Fernandez discloses that the input to two signal generators, which generate the carrier signals on ***different frequencies***, can be the ***same*** "Data_In signal 71." Ex. 1005, ¶80; Fig. 8. A POSITA would understand that this teaching could also apply to Figure 2A, and would have considered it obvious.

H. Claim 8: The method of claim 1 wherein the first information and the second information are from the same data stream.

257. In my opinion, Fernandez in view of Montojo renders obvious this limitation. For example, Fernandez discloses that the input to two signal generators can be the same "Data_In signal 71," and therefore the ***same data stream***. Ex. 1005,

¶80; Fig. 8. A POSITA would understand that this teaching could also apply to Figure 2A, and would have considered it obvious.

I. Claim 10

10[pre]: A method of transmitting information in a wireless communication channel comprising:

258. In my opinion, Fernandez in view of Montojo renders obvious this limitation for the same reasons I discussed above for claim 1[pre].

10[a]: receiving a first digital signal comprising first data to be transmitted;

10[b]: receiving a second digital signal comprising second data to be transmitted;

259. In my opinion, Fernandez in view of Montojo renders obvious these limitations.

260. Fernandez teaches that in Figure 2A, "data 1" and "data 2" are the ***first*** and ***second digital signal comprising data to be transmitted***, respectively. I have indicated this with annotations below. Specifically, "the multi-carrier technique of FIGS. 2A-2B can generate signals 22 with energy at many places in a given bandwidth," with each carrier frequency carrying "information content." Ex. 1005, ¶9. As depicted in Figure 2A, each signal generator receives as input "data" which results in RF signals 17A through 17E. Ex. 1005, ¶5. Because this data is converted into an analog signal using a digital-to-analog converter (DAC), a POSITA would understand that the first and second data are ***digital signals***.

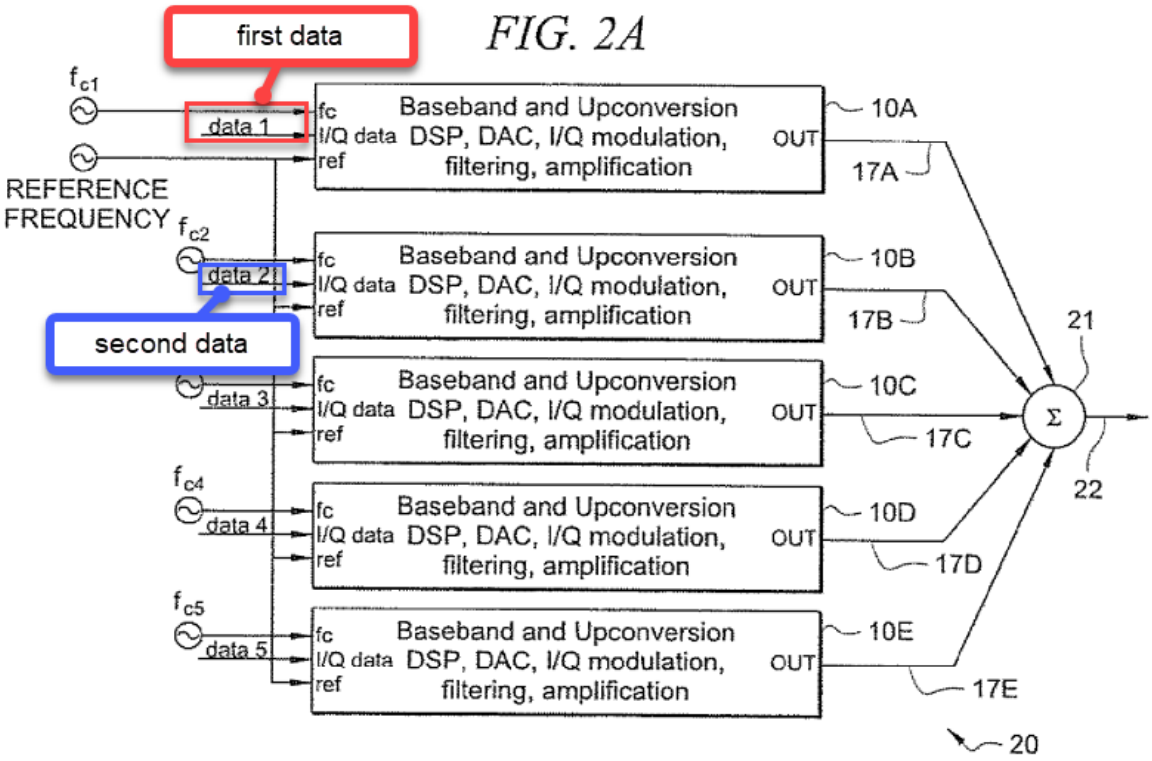

10[c]: converting the first digital signal into a first analog signal using a first digital-to-analog converter, the first analog signal carrying the first data across a first frequency range;

10[d]: converting the second digital signal into a second analog signal using a second digital-to-analog converter, the second analog signal carrying the second data across a second frequency range;

261. In my opinion, Fernandez in view of Montojo renders obvious this limitation.

262. With respect to the limitation ***"converting the [first/second] digital signal into a [first/second] analog signal using a [first/second] digital-to-analog converter,"*** Fernandez discloses that the signal generators in Figure 2A perform "DAC," as I have indicated below.

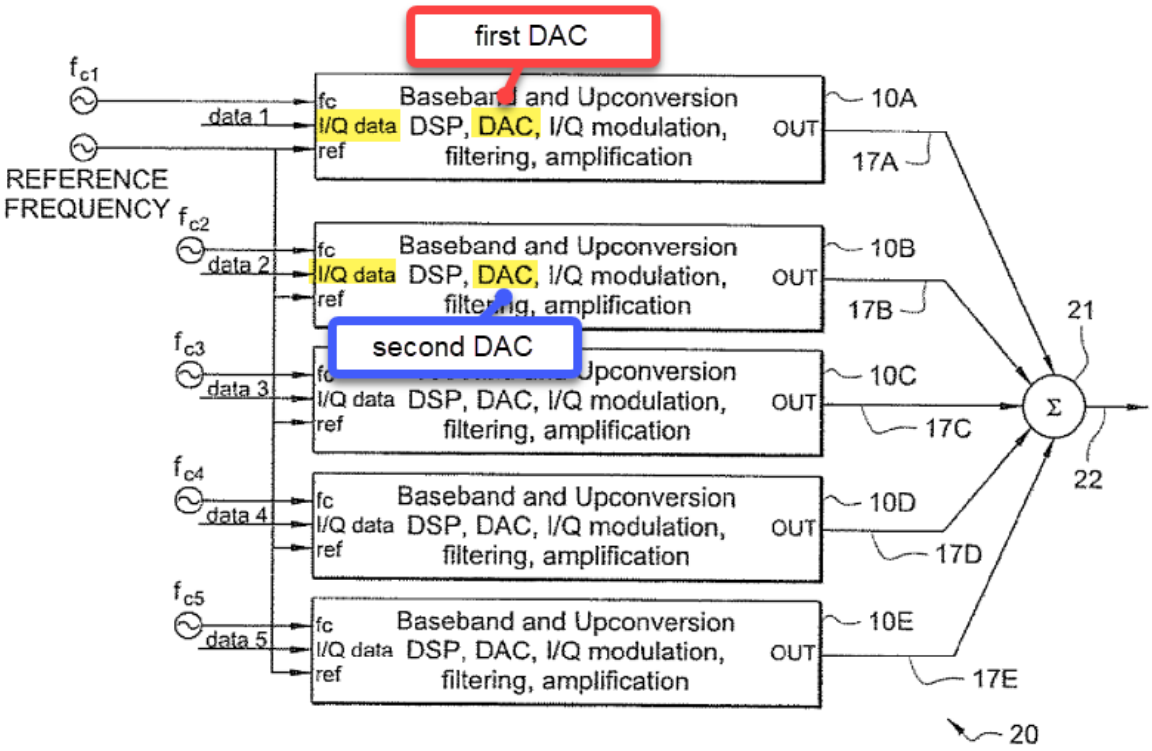

263. Furthermore, Fernandez discloses that each signal generator in Figure 2A is "the exemplary signal generator 10 described with FIG. 1," and that the first and second data input of the first and second signal generator are converted to "I/Q data." Ex. 1005, ¶8. Fernandez further teaches that the signal generators in Figure 2 are as depicted in Figure 1 and comprise an "in-phase (I) DAC 11 and a quadrature (Q) DAC 12 for I and Q channels." Ex. 1005, ¶5. A POSITA would understand that in-phase and quadrature are components of a digital signal. I have indicated in the annotations below where the DAC is in each of the signal generators.

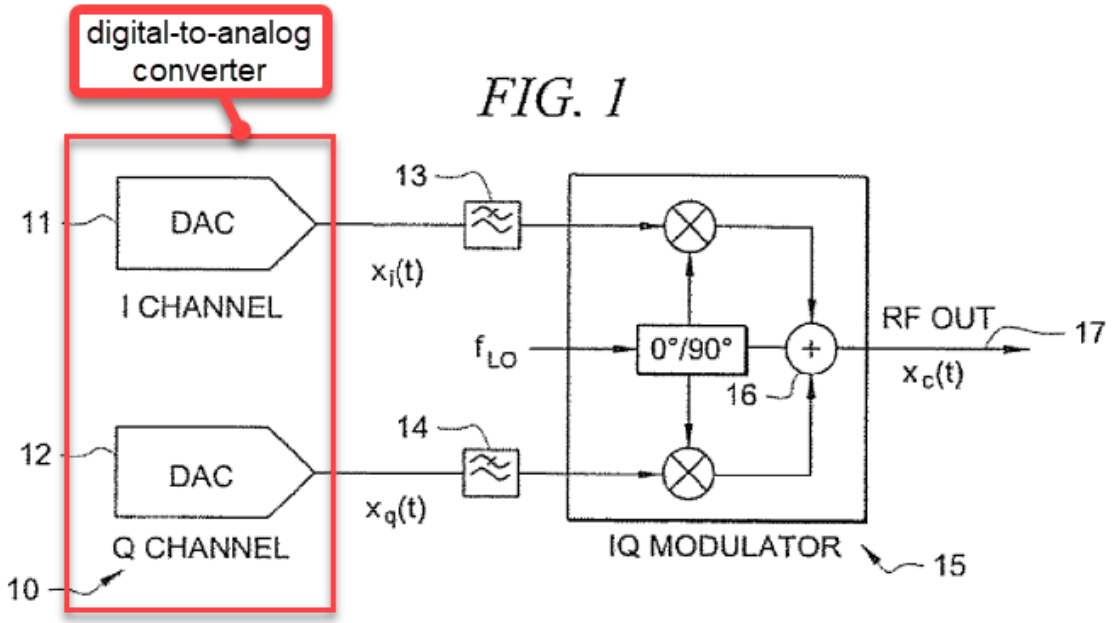

264. In other words, Fernandez discloses that in Figure 2A, the first and second data digital signal are converted to their I/Q components and then converted to an analog signal using DACs 11 and 12, as shown in Figure 1.

265. With respect to the limitation ***"[first/second] analog signal carrying the [first/second] data across a [first/second] frequency range,"*** as I will discuss further below, Fernandez teaches that each signal generator performs upconversion on the analog signals to generate "radio frequency (RF) signals" such as signals 17A and 17B having a frequency range centered at f_{c1} and f_{c2}, respectively. Ex. 1005, ¶¶6, 8. A POSITA would understand that the upconversion process will convert the analog signal's frequency range to a new center frequency. Thus, a POSITA would understand that the first and second analog signal carry data across a first and second

frequency range which is upconverted to be centered on the first and second RF frequency center f_{c1} and f_{c2}, respectively.

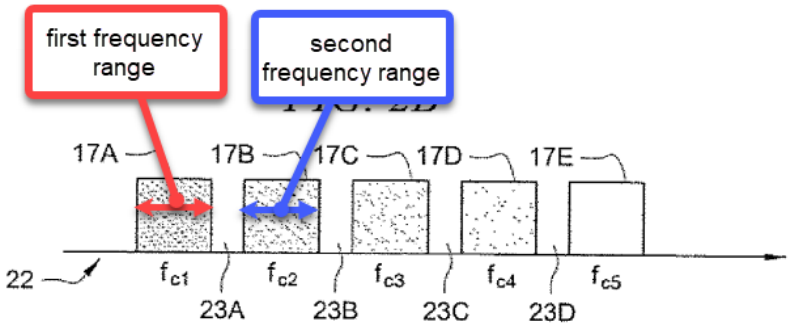

10[e]: up-converting the first analog signal to a first RF center frequency to produce a first up-converted analog signal, wherein the first up-converted analog signal comprises a first up-converted frequency range from the first RF center frequency minus one-half the first frequency range to the first RF center frequency plus one-half the first frequency range;

10[f]: up-converting the second analog signal to a second RF center frequency greater than the first center RF frequency to produce a second up-converted analog signal, wherein the second up-converted analog signal comprises a second up-converted frequency range from the second RF center frequency minus one-half the second frequency range to the second RF center frequency plus one-half the second frequency range, and wherein a frequency difference between the first RF center frequency and the second RF center frequency is greater than the sum of one-half the first frequency range and one-half the second frequency range;

266. In my opinion, Fernandez in view of Montojo renders obvious these limitations.

267. With respect to the limitation ***"up-converting the [first/second] analog signal to a [first/second] RF center frequency,"*** Fernandez discloses that each

signal generator in Figure 2A performs "Upconversion" on the first and second analog signal. I have indicated this below with annotations.

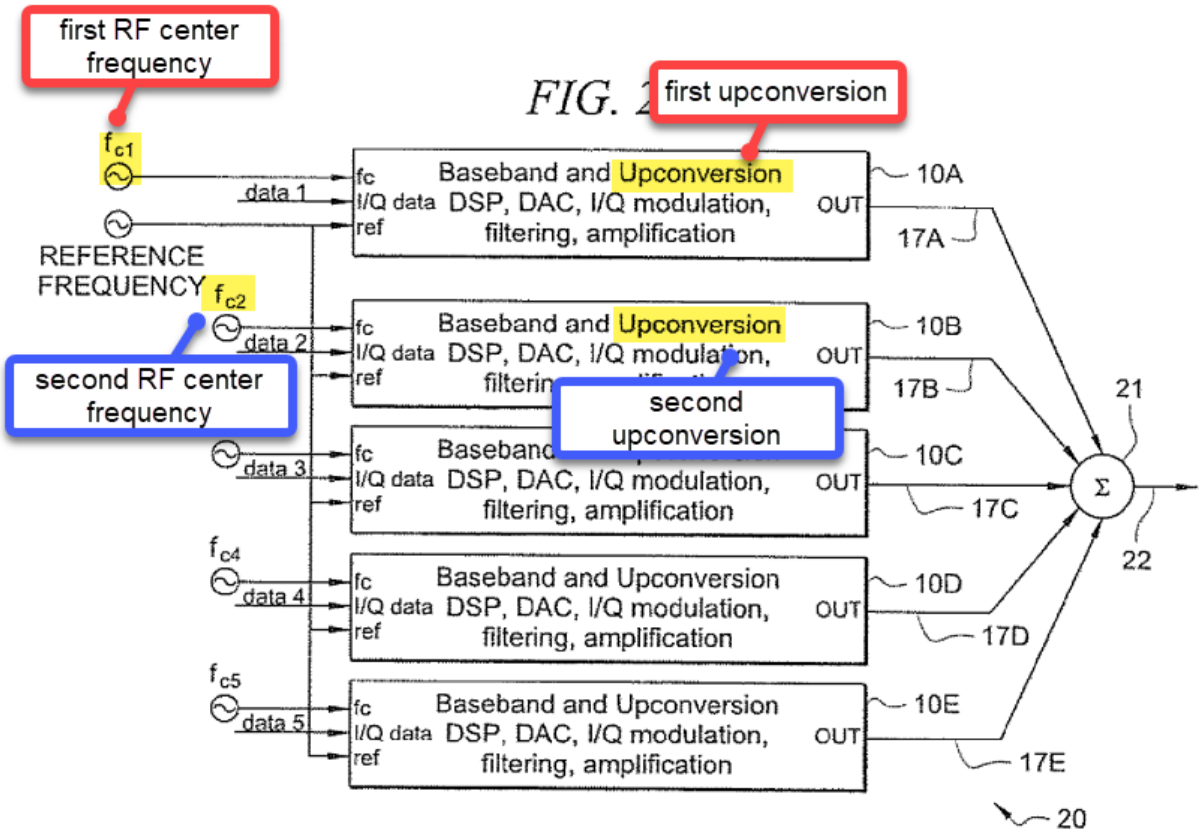

268. As shown in the revised versions of Figure 1 below, for each signal generator, after the digital signal is converted to an analog signal using a DAC, analog signals are "modulated by an IQ modulator 15, wherein the outputs of the I and Q channel are summed by summation circuit 16 to generate an ***upconverted*** wideband signal output 17 centered at frequency F_{LO} (where 'LO' refers to local oscillator)." Ex. 1005, ¶5. In Figure 2B, first RF center frequency f_{c1} and second RF center frequency f_{c2} are passed into the first and second signal generator as F_{LO}. Thus, the upconversion

will upconvert the first and second analog signal to a first and second RF frequency range centered on f_{c1} and f_{c2}.

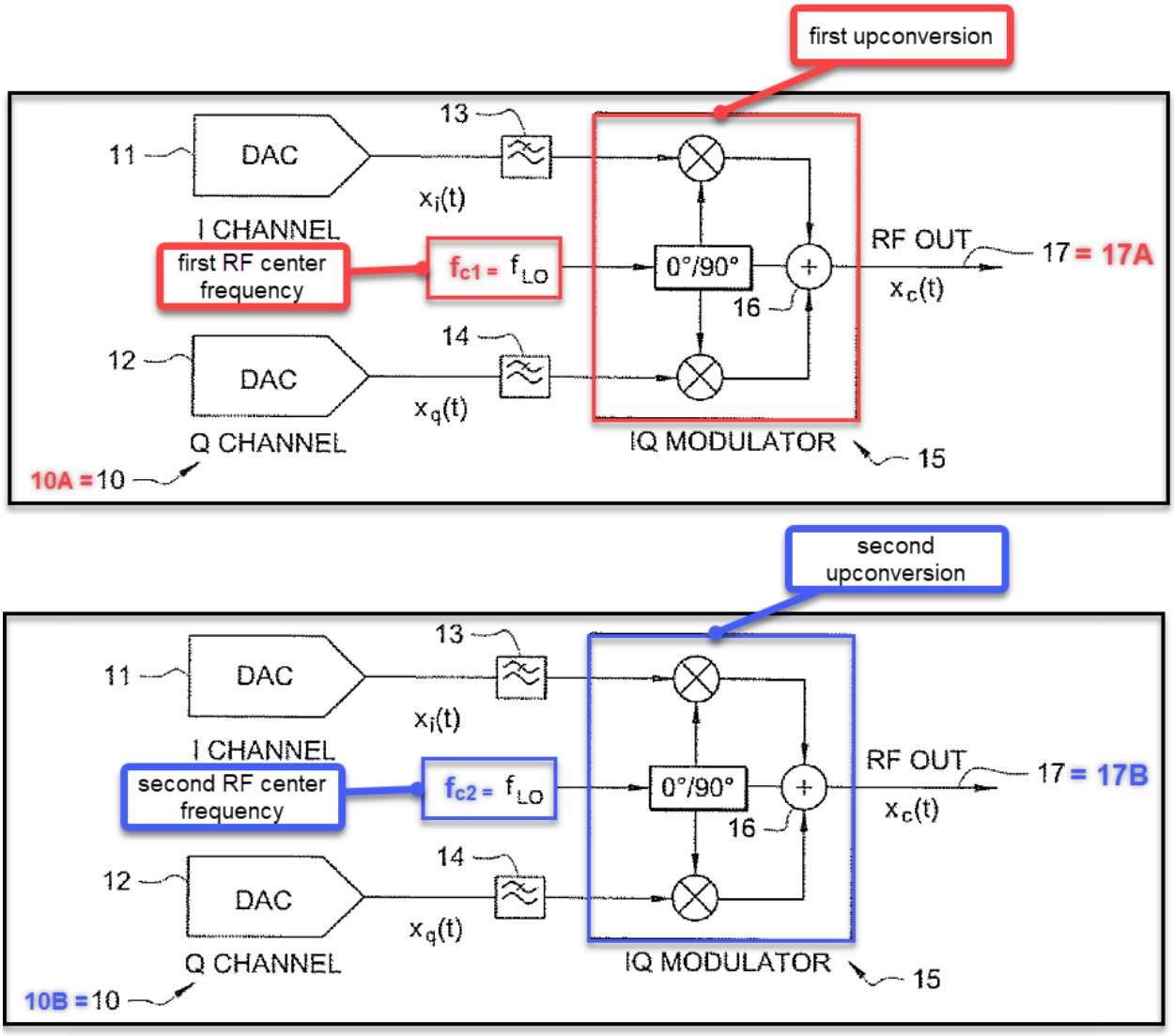

269. Fernandez provides the equations for upconverting the input baseband signal to the new frequency center. Ex. 1005, ¶6. In these equations, $x_c(t)$ is the "baseband signal" and $x_z(t)$ is the "upconverted baseband signal." *Id.*

$x_z(t)=x_1(t)+jx_Q(t)$, where $x_1(t)$ and $x_Q(t)$ are real signals.

$$x_c(t)=\sqrt{2}\cdot Re[x_z(t)\cdot e^{j2\pi f_{c1}}]$$

$$x_c(t)=\sqrt{2}\cdot[x_1(t)\cos(2\pi f_c t)-x_Q(t)\sin(2\pi f_c t)]$$

270. With respect to the limitation ***"[first/second] up-converted frequency range from the [first/second] RF center frequency minus one-half the [first/second] frequency range to the [first/second] RF center frequency plus one-half the [first/second] frequency range,"*** Fernandez discloses that first and second signal generators generate RF signal 17A (***first frequency range***) and 17B (***second frequency range***). As discussed above, RF signal 17A is centered on ***first RF center frequency*** f_{c1} and RF signal 17B is centered on ***second RF center frequency*** f_{c2}. Figure 2B also depicts that first and second up-converted frequency ranges are their respective RF center frequencies plus and minus one-half their respective frequency ranges.

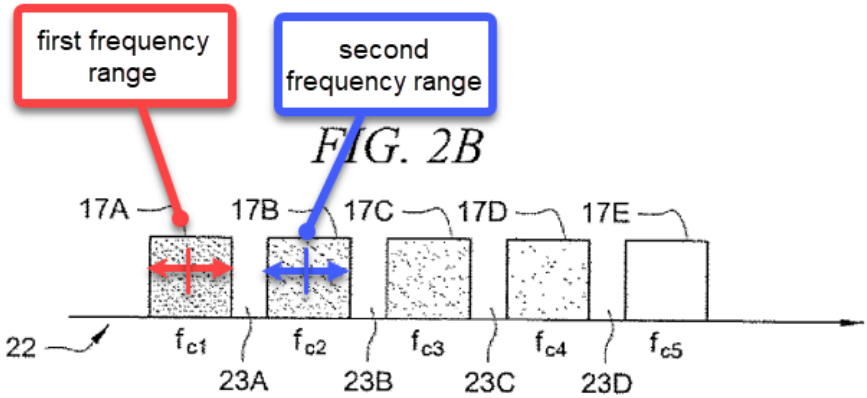

271. With respect to the limitation ***"wherein a frequency difference between the first RF center frequency and the second RF center frequency is greater than the sum of one-half the first frequency range and one-half the second frequency range,"*** this limitation is rendered obvious for the same reasons I gave above for claim 2.

10[g]: combining the first up-converted analog signal and the second up-converted analog signal to produce a combined up-converted signal;

272. In my opinion, Fernandez in view of Montojo renders obvious this limitation. For example, Fernandez discloses that the ***first and second up-converted analog signals are combined*** by a summing circuit 21. Specifically, "as shown in the example of FIGS. 2A and 2B, ***summing the output of multiple signal generators*** is a common technique to create multi-carrier wireless signals. For instance, multiple signal generators, such as the exemplary signal generator 10 described with FIG. 1, may be employed in a signal generation system 20 of FIG. 2A, which shows such signal generators 10A, 10B, 10C, 10D, and 10E that generate RE signals 17A, 17B, 17C, 17D, and 17E, respectively. ***Such signals 17A-17E are summed by summing circuit 21 to generate a multi-carrier wireless signal 22***." Ex. 1005, ¶8.

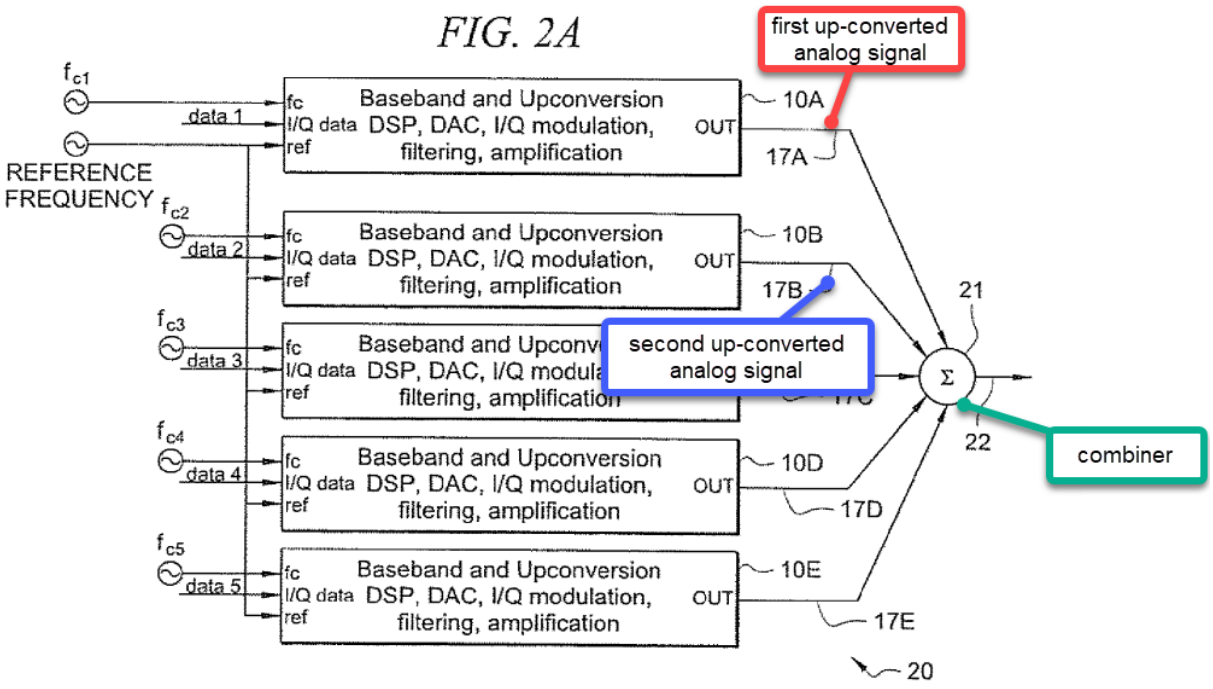

10[h]: amplifying the combined up-converted signal in a power amplifier resulting in an amplified combined up-converted signal; and

273. In my opinion, Fernandez in view of Montojo renders obvious this limitation. As I discussed above, Montojo teaches "it would be advantageous to utilize a ***single power amplifier*** for transmission of a plurality of carriers transmitted by a multi-carrier terminal." Ex. 1006, ¶5. Thus, a POSITA would have found it obvious to modify Fernandez such that instead of each signal generator performing amplification, amplification is instead performed after the RF signals are combined at combiner 21. *See* Section XIII.A, *supra*. My revised version of Fernandez's Figure 2A in view of Montojo reflects the combination and depicts amplifying the combined up-converted signal in a power amplifier to result in an amplified signal.

FIG. 2A

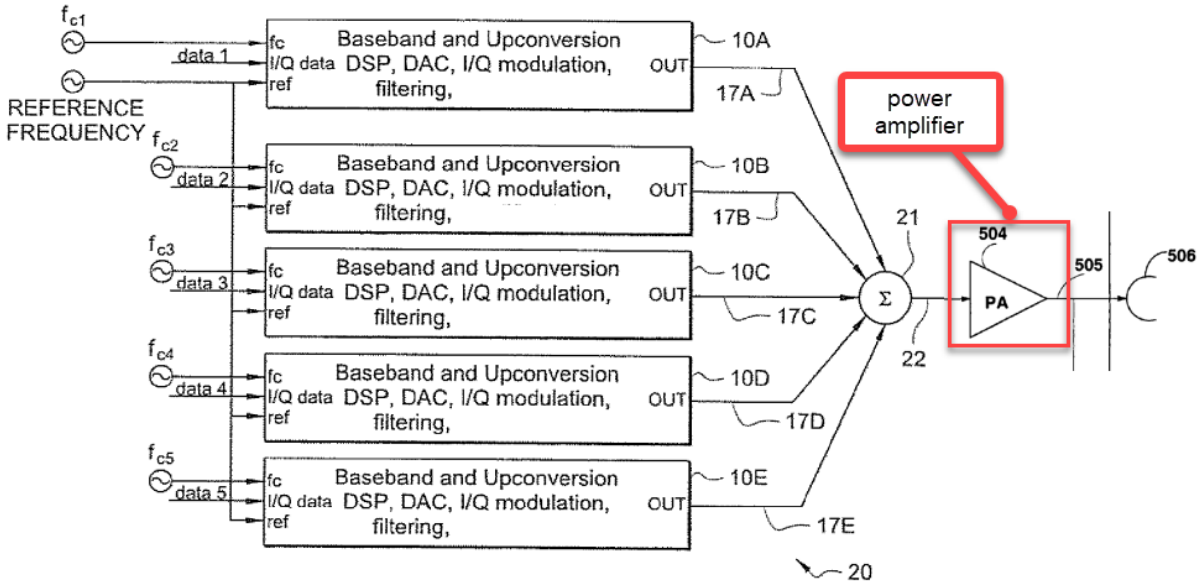

10[i]: transmitting the amplified combined up-converted signal on a first antenna,

274. In my opinion, Fernandez in view of Montojo renders obvious this limitation. For example, Fernandez discloses that the ***amplified combined up-converted signal*** "generated signal 22" is a "multi-channel ***communication format***." Ex. 1005, ¶¶8-9. A POSITA would understand that since this signal is transmitted and communicated, it must have been transmitted using an antenna.

275. Regardless, Montojo's Figure 5 depicts multiple carrier signals being combined and then amplified with a single power amplifier that is then transmitted by a single antenna 506. Ex. 1006, ¶42 ("[A] plurality of carriers … are summed by a signal combiner 502 which sums the carriers to produce a multi-carrier signal that is

input to a power amplifier (PA) 504."). A POSITA would have likewise found it obvious to transmit the multi-carrier signal using a single antenna in view of Montojo.

276. My revised version of Fernandez's Figure 2A in view of Montojo depicts the single antenna transmitting the multi-carrier signal.

FIG. 2A

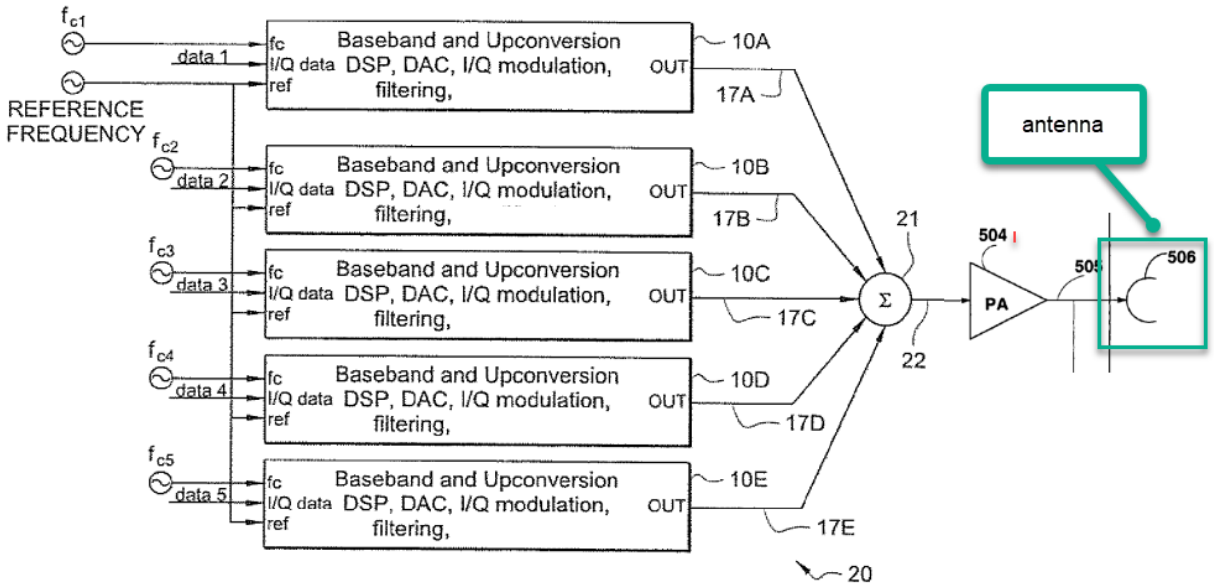

10[j]: wherein the bandwidth of said power amplifier is greater than the difference between a lowest frequency in the first up-converted frequency range and a highest frequency in the second up-converted frequency range.

277. In my opinion, Fernandez in view of Montojo renders obvious this limitation for the same reasons I gave above for claim 4.

J. Dependent Claim 13: "The method of claim 10 wherein the first digital signal is encoded using a first wireless protocol and the second digital signal is encoded using a second wireless protocol."

278. In my opinion, Fernandez in view of Montojo renders obvious this limitation for the same reasons I gave above for claim 6.

K. Independent Claim 17

17[pre]: A wireless communication system comprising:

279. In my opinion, Fernandez in view of Montojo renders obvious this limitation for the same reasons I gave above for claim 10[pre].

17[a]: a baseband digital system for providing a first digital signal comprising a first data to be transmitted and a second digital signal comprising a second data to be transmitted;

280. In my opinion, Fernandez in view of Montojo renders obvious this limitation for the same reasons I gave above for claim 10[a]. It is also my opinion that Fernandez further discloses a ***baseband digital system***. Ex. 1005, ¶6 ("upconvert[] baseband signal[s]"), ¶11 ("a general method is provided to increase a digitally synthesized signal's bandwidth by frequency interleaving ***multiple (i.e., at least 2) digitally synthesized signal sources of narrower bandwidth***").

17[b]: a first digital-to-analog converter for receiving the first digital signal and converting the first digital signal into a first analog signal, the first analog signal carrying the first data across a first frequency range;

281. In my opinion, Fernandez in view of Montojo renders obvious this limitation for the same reasons I gave above for claim 10[c].

17[c]: a second digital-to-analog converter for receiving the second digital signal and converting the second digital signal into a second analog signal, the second analog signal carrying the second data across a second frequency range;

282. In my opinion, Fernandez in view of Montojo renders obvious this limitation for the same reasons I gave above for claim 10[d].

17[d]: a first up-converter circuit having a first input coupled to receive the first analog signal and a second input coupled to receive a first modulation signal having a first RF frequency, wherein the first up-converter outputs a first up-converted analog signal comprising a first up-converted frequency range from the first RF frequency minus one-half the first frequency range to the first RF frequency plus one-half the first frequency range;

283. In my opinion, Fernandez in view of Montojo renders obvious this limitation for the same reasons I gave above for claim 10[e].

17[e]: a second up-converter circuit having a first input coupled to receive the second analog signal and a second input coupled to receive a second modulation signal having a second RF frequency, wherein the second up-converter outputs a second up-converted analog signal comprising a second up-converted frequency range from the second RF frequency minus one-half the second frequency range to the second RF frequency plus one-half the second frequency range, and wherein frequency difference between the first RF frequency and the second RF frequency is greater than the sum of one-half the first frequency range and one-half the second frequency range; and

284. In my opinion, Fernandez in view of Montojo renders obvious this limitation for the same reasons I gave above for claim 10[f].

17[f]: a power amplifier coupled to receive the first and second up-converted analog signals, wherein the bandwidth of the power amplifier is greater than the difference between a lowest frequency in the first up-converted frequency range and a highest frequency in the second up-converted frequency range.

285. In my opinion, Fernandez in view of Montojo renders obvious this limitation for the same reasons I gave above for claim 10[h].

L. Dependent Claim 21: "The communication system of claim 17 wherein the first data of the first digital signal is encoded using a

first wireless protocol and the first data of the second digital signal is encoded using a second wireless protocol."

286. In my opinion, Fernandez in view of Montojo renders obvious this limitation for the same reasons I gave above for claim 6.

M. Dependent Claim 22: "The communication system of claim 17 wherein the second data corresponds to the first data and wherein the power amplifier outputs a third up-converted signal comprising the up-converted first analog signal and the up-converted second analog signal."

287. *See* claim 7 and claim 10g. To the extent "corresponds to" is discernable and means that the first and second data are the same data, then as set forth in my analysis for claim 7, Suzuki discloses the first and second information being the same data. To the extent it means they are from the same data stream, then as set forth in my analysis for claim 8, Suzuki discloses that as well.

288. And as set forth in my analysis for claim 10g above, Suzuki discloses or renders obvious ***combining the first and second up-converted analog signals***, which discloses this limitation's requirement of ***outputting a third up-converted signal comprising the first and second up-converted analog signals.*** Thus, all that remains in this limitation is that the ***power amplifier*** performs the combining of the up-converted signals.

289. A POSITA would understand that the ***power amplifier*** could also perform the step of combining the up-converted analog signals disclosed in Fernandez as explained for claim 10g, thereby producing a third up-converted signal comprising

the up-converted first and second analog signals. Figure 2B depicts the combined analog signals.

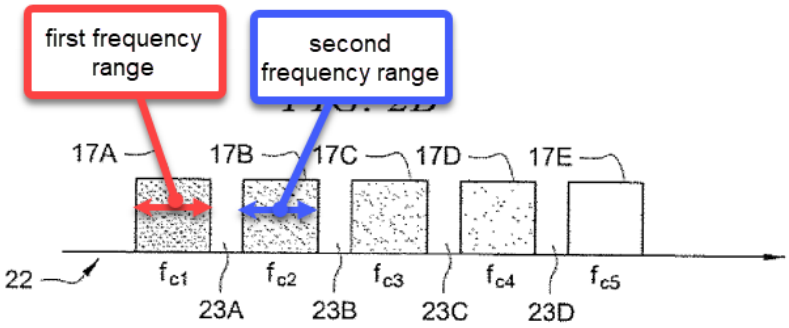

XIV. GROUND 7: FERNANDEZ AND MONTOJO IN FURTHER VIEW OF JALALI RENDER OBVIOUS CLAIMS 7-9, 22, AND 23

290. As I explained above in Ground 3, Jalali teaches a number of things that would be obvious to incorporate into Suzuki. For example, OFDM that uses time-division as claimed by claims 9 and 23. Another example is the teaching of using the same data or data stream, as recited in claims 7, 8, and 22. It is my opinion that it would have been obvious to combine Jalali with Fernandez and Montojo.

A. Rationale to Combine Fernandez-Montojo with Jalali

291. In my opinion, a POSITA would have been motivated to combine Fernandez (as modified by Montojo) and Jalali. As discussed above, Fernandez teaches generating and transmitting a multi-carrier signal. Jalali teaches OFDM that also uses time-division multiplexing. A POSITA would have found it obvious to modify Fernandez-Montojo to use Jalali's time-divided OFDM method.

292. A POSITA would have been motivated by the well-known benefits of using OFDM with time-division multiplexing, discussed in Ground 3. A POSITA would know that all of these benefits would likewise apply to Fernandez's disclosure of multi-carrier signals. Indeed, Fernandez discloses that its system is directed to the WiMAX (IEEE 802.16) standard, which a POSITA would have known uses OFDMA, which as discussed above is OFDM with time-division multiplexing as claimed in claims 9 and 23 and disclosed in Jalali. Ex. 1027, ¶32 ("The OFDMA mode of 802.16e is expected to be most widely deployed for the mobile broadband services."). Thus, a POSITA would have understood that Jalali's teachings of an implementation of OFDM with time-division multiplexing were readily applicable to Fernandez's multi-carrier transmissions using the WiMAX standard.

293. A POSITA would have reasonably expected this combination to succeed. OFDM with TDM had long been known in the field and POSITA would have been familiar with its implementation, including as described by Jalali. Implementing OFDM with TDM into Fernandez-Montojo would have been well within the capabilities of a POSITA.

294. Finally, as discussed above, Fernandez, Montojo, Jalali, and the '802 patent are all directed to the same field of multi-carrier transmissions.

B. Claims 7, 8, and 22

295. Claim 7 recites that the first and second information are the ***same data*** transmitted across two different frequencies. Claim 8 recites that the first and second information are from the ***same data stream***. Claim 22 recites, in part, that the second data ***corresponds*** to the first data.

296. As I explained above in Ground 3, Jalali discloses all three of these limitations. In the Fernandez-Montojo-Jalali combination, Fernandez-Montojo would likewise transmit on different frequency bands information that is the same data or from the same data stream.

C. Claims 9 and 23

297. In my opinion, Fernandez-Montojo in view of Jalali render obvious claims 9 and 23. These two claims recite OFDM using time-division multiplexing. As I discussed above, a POSITA would have found it obvious to transmit Fernandez's transmissions using the time-divided OFDM methods described in Jalali. And as I discussed in Ground 3, Jalali discloses the limitations in claims 9 and 23.

XV. GROUND 8: FERNANDEZ AND MONTOJO IN FURTHER VIEW OF CHEN RENDER OBVIOUS CLAIMS 14 AND 24

298. As I discussed in Ground 4, Chen describes a receiver that processes multi-carrier wireless transmissions as claimed by claims 14 and 24. Although in Ground 4 I referred to Suzuki's disclosure of first and second data and first and second

frequency ranges (as claimed in claim 10), the analysis would equally apply to Fernandez's disclosure of those elements as I described above.

299. It would have been obvious to combine the Fernandez-Montojo transmitter with Chen's receiver for the same reasons discussed in Ground 4, including the benefits (and necessity) of the conventional low noise amplifier, downconverters, and filter claimed in claims 14 and 24, and the fact that this process is disclosed throughout the literature. The combination also renders obvious Claim 25 for the reasons discussed above in Ground 2 for Claim 2.

300. Moreover, in my opinion, to the extent claim 14pre is limiting, and to the extent Patent Owner argues that Fernandez does not disclose that the second data is the same as the first data, Jalali discloses that "the overall transmission channel is essentially divided into a number of (L) parallel sub-channels that are used to transmit the ***same or different data***." Ex. 1008, 8:50-53. As explained in Ground 7, a POSITA would have found it obvious to incorporate such teachings into the Fernandez-Montojo transmitter (which is equally applicable to the Fernandez-Montojo-Chen combination).

XVI. GROUND 9: FERNANDEZ AND MONTOJO IN FURTHER VIEW OF ETEMAD RENDER OBVIOUS CLAIMS 6, 13, AND 21

301. As I discussed in Ground 5, Etemad discloses a multi-carrier signal that uses TDD and FDD for the different carriers, which meets claims 6, 13, and 21 under Patent Owner's apparent construction of those claims according to their infringement contentions.

302. As I further discussed in Ground 5, there were many well-known benefits to using TDD and FDD within a multi-carrier signal, including its flexibility to handle various traffic scenarios. A POSITA would be motivated by these benefits to incorporate Etemad's teachings into Fernandez and Montojo.

303. A POSITA would have reasonably expected this combination to succeed. TDD and FDD had long been known in the field and POSITA would have been familiar with its implementation, including as described by Etemad. Implementing TDD and FDD into Fernandez and Montojo would have been well within the capabilities of a POSITA. Moreover, Etemad explicitly teaches that TDD and FDD are compatible with multi-carrier signals, which are also taught in Fernandez.

304. As discussed in previous grounds, Fernandez, Montojo, and Etemad are all directed to the same field.

XVII. CONCLUSION

305. I hereby declare that all statements made of my own knowledge are true and that all statements made on information and belief are believed to be true. I further declare that these statements were made with the knowledge that willful false statements and the like so made are punishable by fine or imprisonment, or both, under Section 1001 of the Title 18 of the United States Code and that such willful false statements may jeopardize the validity of this proceeding.

Executed on this February 26, 2024 by:

Kevin C. Almeroth

Kevin C. Almeroth, Ph. D.