UNITED STATES PATENT AND TRADEMARK OFFICE

BEFORE THE PATENT TRIAL AND APPEAL BOARD

SAMSUNG ELECTRONICS AMERICA, INC., and
SAMSUNG ELECTRONICS CO., LTD.,
Petitioners,

v.

COBBLESTONE WIRELESS LLC,
Patent Owner.

Case IPR2024-00606
Patent 7,924,802

PATENT OWNER'S PRELIMINARY RESPONSE

TABLE OF CONTENTS

Page

I. INTRODUCTION 1

II. PETITIONER FAILS TO SHOW A REASONABLE LIKELIHOOD OF PREVAILING AS TO ANY CHALLENGED CLAIM (ALL GROUNDS, ALL CLAIMS). 1

A. The Petition's Rick-Based Ground Fails (Ground 1, Claim 1). 1

1. The Preamble's "In A Wireless Communication Channel" Is Limiting. 2

2. "In A Wireless Communication Channel" Requires The Claimed Method To Be Performed In One "Wireless Communication Channel." 5

3. Petitioner Fails To Show That Rick Performs The Claimed Method In "A Wireless Communication Channel." 8

B. The Petition's Suzuki-Based Grounds Fail (Grounds 2-5, All Challenged Claims). 11

1. Petitioner Fails To Show That Suzuki Discloses Or Renders Obvious Independent Claims 1 And 10. 12

2. Petitioner Fails To Show That Suzuki Discloses Or Renders Obvious Independent Claims 10 And 17. 13

i. Petitioner's Reliance On Suzuki Fig. 6 Fails. 14

ii. Petitioner's Reliance On Suzuki Fig. 8 Fails. 17

a. Petitioner Fails To Show The Disclosure Of A First And A Second Up-Converted Signal..... 18

b. Petitioner Fails To Show Disclosure Of Two Up-Converted Frequency Ranges As Claimed. 21

3. Petitioner Fails To Show That Suzuki/Chen Discloses Or Renders Obvious Independent Claim 24. 24

C. The Petition's Fernandez-Based Grounds 6-9 Fail. 32

1. Petitioner Fails To Show That Fernandez Performs The Claimed Method "In A Wireless Communication Channel." (Claims 1, 10). 33

2. Petitioner Fails To Point To "A Baseband Digital System" That Provides A First And A Second Baseband Signal. (Claim 17). 34

3. Petitioner Fails To Show That A POSITA Would Have Been Motivated To Combine Fernandez And Montojo As Proposed (Claims 10, 17). 38

4. Petitioner Fails To Show That Fernandez-Chen Disclose Independent Claim 24 44

III. THE PETITION SHOULD BE DENIED UNDER *FINTIV*. 44

A. *Fintiv* Factor 1: The District Court Has Not Granted A Stay, Nor Is There Any Evidence That A Stay Will Be Granted. 45

B. *Fintiv* Factor 2: The District Court Trial Will Occur Months Before The Deadline For A Final Written Decision In This Proceeding. 47

C. *Fintiv* Factor 3: By The Time An Institution Decision Is Reached, There Will Have Been Extensive Investment In The Parallel District Court Litigation. 50

D. *Fintiv* Factor 4: There Is Perfect Overlap Between This IPR And The District Court Proceeding. 53

E. *Fintiv* Factor 5: Petitioners Are The Defendants In The District Court Litigation. 55

F. *Fintiv* Factor 6: Other Circumstances, Including The Merits, Weigh Against Institution. 56

IV. CONCLUSION 58

TABLE OF AUTHORITIES

Page(s)

FEDERAL CIRCUIT DECISIONS

Arctic Cat Inc. v. Polaris Indus.,
795 Fed. Appx. 827 (Fed. Cir., 2019) 43

Baldwin Graphic Sys., Inc. v. Siebert, Inc.,
512 F.3d 1338 (Fed. Cir. 2008).....5

Catalina Mktg. Int'l v. Coolsavings.com, Inc.,
289 F.3d 801 (Fed. Cir. 2002).....2

Convolve, Inc. v. Compaq Computer Corp.,
812 F.3d 1313 (Fed. Cir. 2016).....5

Corning Glass Works v. Sumitomo Elec. U.S.A., Inc.,
868 F.2d 1251 (Fed. Cir. 1989).....4

Dynamic Drinkware, LLC v. Nat'l Graphics, Inc.,
800 F.3d 1375 (Fed. Cir. 2015).....11

Eli Lilly & Co. v. Teva Pharms. Int'l GmbH,
8 F.4th 1331 (Fed. Cir. 2021).....3

Harari v. Lee,
656 F.3d 1331 (Fed. Cir. 2011).....7

In re Magnum Oil Tools, Ltd.,
829 F.3d 1380 (Fed. Cir. 2016).....11

On Demand Mach. Corp. v. Ingram Indus.,
442 F.3d 1331 (Fed. Cir. 2006).....4

Pitney Bowes, Inc. v. Hewlett-Packard Co.,
182 F.3d 1298 (Fed. Cir. 1999).....2

Tech. Licensing Corp. v. Videotek, Inc.,
545 F.3d 1316 (Fed. Cir. 2008).....11

In re Varma v. IBM Corp.,
816 F.3d 1352 (Fed. Cir. 2016).....6

Vizio, Inc. v. Int'l Trade Comm'n,
605 F.3d 1330 (Fed. Cir. 2010).....4

Winner Int'l Royalty Corp. v. Wang,
202 F.3d 1340 (Fed. Cir. 2000) 43

ADMINISTRATIVE DECISIONS

Acclarent, Inc. v. Albritton,
IPR2018-00268, Paper 12 (Jan. 31, 2019) 42

Alcon Inc. v. AMO Dev., LLC,
IPR2021-00853, Paper 48 (Dec. 2, 2022) 41

Apcon, Inc. v. Gigamon Inc.,
IPR2020-01579, Paper 9 (Mar. 16, 2021) 55

Apple Inc. v. Fintiv, Inc.,
IPR2020-00019, Paper 11 (Mar. 20, 2020)
(precedential) 44

Apple Inc. v. Zomm, LLC,
IPR2019-1030, Paper 8 (Nov. 14, 2019) 52

Canon, Inc. v. WSOU Invests., LLC,
IPR2022-01532, Paper 14 (Apr. 14, 2023) 42

Code200, UAB v. Luminati Networks Ltd.,
IPR2020-01506, Paper 10 (Feb. 16, 2021) 55

CommScope Techs. LLC v. Dali Wireless, Inc.,
IPR2022-01242, Paper 23 (Feb. 27, 2023)
(precedential) 56

EClinicalWorks, LLC v. Decapolis LLC,
IPR2022-00229, Paper 10 (Apr. 13, 2022) 48, 53

Facebook, Inc. v.Uniloc USA, Inc.,
IPR2017-01524, Paper 7 (PTAB Dec. 4, 2017) 10

Next Caller, Inc. v. TRUSTID, Inc.,
IPR2019-00961, Paper 10 (Oct. 16, 2019) 54

NHK Spring Co. v. Intri-Plex Technologies, Inc.,
IPR2018-00752, Paper 8 (Sept. 12, 2018)
(precedential) 44

Nine Energy Serv. Inc. v. NCS Multistage Inc.,
IPR2020-01615, Paper 18 (Mar. 24, 2011) 49

NXP USA, Inc. v. Impinj, Inc.,
PGR2022-00005, Paper 17 (May 2, 2022) 49

OpenSky Indus., LLC v. VLSI Tech. LLC,
IPR2021-01064, Paper 102 (Oct. 4, 2022)
(precedential).....57

Samsung Elecs. Co. Ltd. v. KAIST IP US LLC,
IPR2017-01046, Papers 12 (Oct. 2, 2017) 41

SMIC, Americas v. Innovative Foundry Technologies, LLC,
IPR2020-00786, Paper 10 (Oct. 5, 2020).....49

Vector Flow, Inc. v. HID Global Corp.,
IPR2023-00353, Paper 8 (Jul. 17, 2023).....53

Xerox Corp. v. Bytemark, Inc.,
IPR2022-00624, Paper 9 (August 24, 2022) (precedential).....12, 33

REGULATIONS

37 C.F.R. § 42.104 10

OTHER AUTHORITIES

Antonin Scalia & Bryan A. Garner, Reading Law: The Interpretation of Legal
Texts 93 (2012) 23

EXHIBIT LIST	
2001	*Cobblestone Wireless, LLC v. Samsung Electronics Co., Ltd.,* No. 2:22-cv-00285-JRG-RSP, Dkt. 30, Docket Control Order
2002	Federal Court Management Statistics for the Eastern District of Texas through December 2023, *available at* https://www.uscourts.gov/statistics-reports/federal-court-management-statistics-december-2023 [Trial-Statistics]
2003	*Cobblestone Wireless, LLC v. Samsung Electronics Co. et al.*, No. 2:23-cv-00285, Docket as of June 13, 2024
2004	*Cobblestone Wireless, LLC v. Samsung Electronics Co. et al.*, No. 2:23-cv-00285, Plaintiff Cobblestone Wireless, LLC's Preliminary Disclosure of Asserted Claims and Infringement Contentions (E.D. Tex., served Sept. 28, 2023) [Infringement-Contentions]
2005	*Cobblestone Wireless, LLC v. Samsung Electronics Co., LTD et al.*, No. 2:22-cv-00285, Defendant Samsung Electronics Co. LTD. and Samsung Electronics America, Inc.'s Preliminary Invalidity Contentions for U.S. Patent No. 7,924,802 (E.D. Tex., served Dec. 27, 2023) [Invalidity-Contentions]

I. INTRODUCTION

Despite raising nine separate grounds (under lead references Rick, Suzuki and Fernandez), the Petition should be denied because Petitioner fails to demonstrate a reasonable likelihood of prevailing as to any of the challenged claims. *See* Section II. The Board, however, should not even reach Petitioner's grounds as each of the *Fintiv* factors favors denial. *See* Section III.

II. PETITIONER FAILS TO SHOW A REASONABLE LIKELIHOOD OF PREVAILING AS TO ANY CHALLENGED CLAIM (ALL GROUNDS, ALL CLAIMS).

The Petition challenges the claims based on three sets of grounds: Ground 1 based on Rick (addressed in Section II.A), Grounds 2-5 based on Suzuki (addressed in Section II.B), and Grounds 6-9 based on Fernandez (addressed in Section II.C). As explained below, each of Petitioner's grounds fail to demonstrate a reasonable likelihood of prevailing as to any of the challenged claims.

A. The Petition's Rick-Based Ground Fails (Ground 1, Claim 1).

Petitioner's first Ground, obviousness over Rick, challenges only claim 1. Claim 1's method requires that it be performed "in a wireless communication channel." As discussed below, while this limitation is in the preamble, it is limiting. *See* Section II.A.1. Petitioner also treats it as limiting and does not contend otherwise. Pet., 9, 12. Furthermore, plain meaning, the '802's specification, and federal circuit precedent all confirm that this limitation requires

that the claimed method be performed in "a wireless communication channel," *i.e.*, "one wireless communication channel." *See* Section II.A.2. While Petitioner argues that Rick discloses the preamble, it fails to demonstrate that Rick discloses or renders obvious "a wireless communication channel." *See* Section II.A.3.

1. <u>The Preamble's "In A Wireless Communication Channel" Is Limiting.</u>

Petitioner, again, treats claim 1's preamble as limiting and does not contend otherwise. Pet., 9, 12. And this is for good reason. The preamble provides for "[a] method of transmitting information in a wireless communication channel comprising ..." "In general, a preamble limits the invention if it recites essential structure or steps, or if it is 'necessary to give life, meaning, and vitality' to the claim." *Catalina Mktg. Int'l v. Coolsavings.com, Inc.*, 289 F.3d 801, 808 (Fed. Cir. 2002) (quoting *Pitney Bowes, Inc. v. Hewlett-Packard Co.*, 182 F.3d 1298, 1305 (Fed. Cir. 1999)).

Here, claim 1 does not define a structurally complete invention in the claim body and, instead, the preamble's "in a wireless communication channel" is necessary to give life and meaning to the claim. The '802's specification repeatedly explains that the invention is regarding a specific method within "a [wireless] communication channel." *See, e.g.*, Ex. 1001 ['802] Abstract ("Embodiments of the present invention transmit signals simultaneously over ***a communication channel*** at different RF center frequencies"); 1:61-63 ("In one

embodiment, the present invention includes a method of transmitting information in ***a wireless communication channel***"); *see also* 2:45-47; 6:60-62; 10:63-66; 12:14-15. In fact, the '802 provides specific formulas to recover information based on the response of the different frequency ranges within a single communication channel. *Id*., 13:21-23 ("[h_1, h_2, …, h_N] represents ***the channel response*** over band frequency f_1. [g_1, g_2, …, g_N] represents ***the channel response*** over band frequency f_2.").

In accord, the claim recites a method of transmitting information "in a wireless communication channel" that comprises transmitting information across two frequency ranges as claimed. Ex. 1001 ['802] cl. 1. As the Federal Circuit has explained, "statements of intended purpose in methods of using apparatuses," such as this, "ha[ve] tended to result in a conclusion that such preamble language is limiting." *Eli Lilly & Co. v. Teva Pharms. Int'l GmbH*, 8 F.4th 1331, 1341 (Fed. Cir. 2021). Without the preamble's limitation that the specific method of transmission is "in a wireless communication channel," the claim does not recite a complete structure, and would instead indiscriminately cover all transmission of information across two frequency ranges as claimed. The Federal Circuit has found similar preambles to be limiting:

> To read the claim in light of the specification indiscriminately to cover all types of optical fibers would be divorced from reality. The invention is restricted to those fibers that work as waveguides as defined in the

> specification, which is not true with respect to fibers constructed with the limitations of paragraphs (a) and (b) only. Thus, we conclude that the claim preamble in this instance does not merely state a purpose or intended use for the claimed structure.

Corning Glass Works v. Sumitomo Elec. U.S.A., Inc., 868 F.2d 1251, 1257 (Fed. Cir. 1989); *see also Vizio, Inc. v. Int'l Trade Comm'n*, 605 F.3d 1330, 1341 (Fed. Cir. 2010) (finding the preamble to be limiting where "a construction that required only receipt and storage of the channel map information, and not the ability to decode using that information, could effectively broaden the claims to cover all devices and methods of decoding an A/65 compliant digital broadcast.").

In fact, the Federal Circuit has reversed a district court holding that a similar preamble was not limiting. In *On Demand*, the district court had held that the preamble's recitation of "high speed manufacture" did not limit the claims to require that the claimed steps "must take place within a short period of time." *On Demand Mach. Corp. v. Ingram Indus.*, 442 F.3d 1331, 1343 (Fed. Cir. 2006). In reversing the district court, the Federal Circuit explained that "the preamble in this case necessarily limits the claim, in that it states the framework of the invention," and "the entirety of the claim implements the preamble's high speed manufacture of a single copy." *Id.*, 1343-1344. Similarly, in this case, the preamble's "in a wireless communication channel" states the framework of the invention, and the

context in which the specifically claimed transmission of information must take place. Therefore, "in a wireless communication channel" is limiting.

2. "In A Wireless Communication Channel" Requires The Claimed Method To Be Performed In One "Wireless Communication Channel."

The limitation "in a wireless communication channel" further requires that the claimed method be performed in a single "wireless communication channel."

Unless required otherwise by context or a patent's specification, the indefinite article "a" generally means "one or more" "in open-ended claims containing the transitional phrase 'comprising.'" *Baldwin Graphic Sys., Inc. v. Siebert, Inc.*, 512 F.3d 1338, 1342 (Fed. Cir. 2008). In other words, when a claim's preamble concludes with "comprising," the body of the claim is open-ended because anything that follows "comprising" simply must be included. For instance, if a claim begins with a preamble concluding with "comprising" and the body of the claim requires, *e.g.*, "a processor," the claim would, generally, encompass a system with more than one processor.

That principle, however, does not apply where the article "a" appears before "comprising." *Convolve, Inc. v. Compaq Computer Corp.*, 812 F.3d 1313, 1321 (Fed. Cir. 2016) (finding that "a process" requires a single processor because the claim recites "'a processor' in the preamble before recitation of 'comprising' …"). The preamble here, again, requires "[a] method of transmitting information in a

wireless communication channel comprising: ....” Here, “a wireless communication channel” appears before the word “comprising.” Consequently, the claimed method must be performed within “***a*** wireless communication channel,” not multiple wireless communication channels.[1]

Without any presumption in this instance that “a” means “one or more,” the Board should apply the plain and ordinary meaning of “a”; *i.e.*, “one.” As the Federal Circuit has held, for instance, “a statistical analysis request” means “one request”:

> The error of Interpretation 1 is plain from the claim phrase at issue. The phrase requires “a statistical analysis request corresponding to two or more selected investments.” [citation]. ***That language on its face excludes Interpretation 1. A single request must correspond to at least two investments.***

In re Varma v. IBM Corp., 816 F.3d 1352, 1362 (Fed. Cir. 2016). As *Varma* explained, even though the claim may permit the existence of more than one “statistical analysis request,” there must be one request that meets the claimed limitations:

---

[1] This is, of course, not to say that the claim would not cover a system wherein more than one wireless communication channel independently practice the entirety of the claimed method.

> The Board also cited the indefinite article "a" before "statistical analysis request" to support Interpretation 1. But while "a" sometimes is non-restrictive as to number, permitting the presence of more than one of the objects following that indefinite article, context matters even as to whether the word has that meaning. *See Harari v. Lee*, 656 F.3d 1331, 1341 (Fed. Cir. 2011). ***And here the question is not whether there can be more than one request in a claim-covered system: there can. Rather, the question is whether "a" can serve to negate what is required by the language following "a": a "request" (a singular term) that "correspond[s]" to "two or more selected investments." It cannot.*** For a dog owner to have "a dog that rolls over and fetches sticks," it does not suffice that he have two dogs, each able to perform just one of the tasks. In the present case, no matter how many requests there may be, no matter the variety of the requests the system may receive, the system must be adapted to receive a request that itself corresponds to at least two investments.

Id., 1363; *see also Harari v. Lee*, 656 F.3d 1331, 1341 (Fed. Cir. 2011) (holding that "a bit line" requires a single bit line). Here too, the limitation requires "a wireless communication channel" (a singular term) wherein the claimed method is performed. Like the hypothetical dog in *Verma*, it would not suffice to have a portion of the claimed method performed in one "wireless communication channel" and another portion of the claimed method performed in a different "wireless communication channel."

Moreover, the claim language and specification reinforce the plain meaning and support the conclusion that the claimed method must be performed within a single "wireless communication channel." Again, "a wireless communication channel" appears before "comprising," and therefore does not appear after an open-ended limitation. Second, the plain meaning requires that the method be performed within a single "wireless communication channel." Finally, the specification repeatedly explains that the invention is directed at performing the claimed method in a single wireless communication channel. Ex. 1001 ['802] 1:61-63, 2:45-47; 6:60-62; 10:63-66; 12:14-15. And this is confirmed by the fact that, for example, the specification recites specific mathematical methods to recover information based on the responses of the different frequency ranges within a single communication channel. Ex. 1001 ['802] 13:21-23.

Therefore, claim 1 requires that the claimed method be performed within a single "wireless communication channel."

3. Petitioner Fails To Show That Rick Performs The Claimed Method In "A Wireless Communication Channel."

Claim 1, thus, requires that the method be performed in a single "wireless communication channel." Petitioner, however, fails to show that Rick performs the claimed method in a "communication channel." The claim requires "transmitting first information across a first frequency range" and "simultaneously transmitting second information across a second frequency range." Ex. 1001

['802] cl. 1. The Petition, however, does not demonstrate that both frequency ranges are transmitted via a single communication channel in Rick. Rather, the Petition maps a first "frequency range" to CDMA Channel 1 and a second frequency range to a different "CDMA Channel N" in Rick:

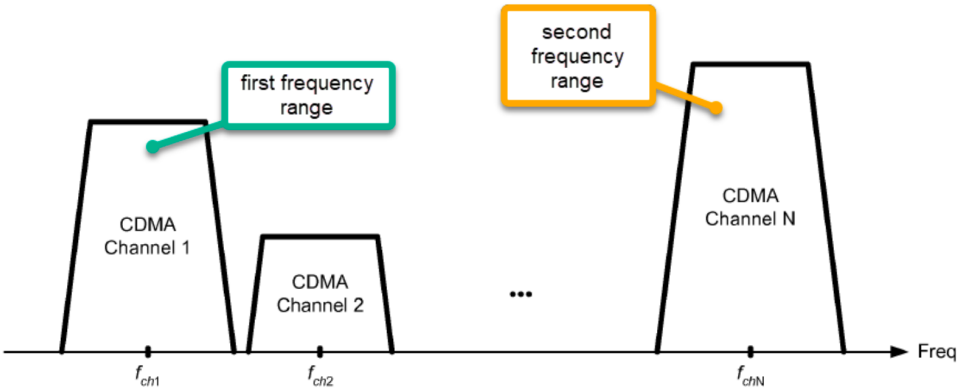

FIG. 1

Pet., 13. But Rick's Figure 1 clearly indicates that each frequency range is an independent "channel." Consistent with its Figure 1, Rick's specification also refers to each CDMA frequency bandwidth as a separate "channel." *See, e.g.*, Ex. 1021 [Rick] 3:21-24 ("In this example, CDMA channel 1 has a carrier frequency of f_{ch1}, CDMA channel 2 has a carrier frequency of f_{ch2}, and so on, and CDMA channel N has a carrier frequency of f_{chN}.").

Petitioner makes no attempt to show that the different CDMA channels of Rick are transmitted within a "communication channel" as required by the claim. Petitioner's entire discussion of the limitation is a single conclusory sentence that states that Rick discloses a "multi-carrier transmitter capable of transmitting on one

or multiple frequency channels simultaneously." Pet., 12 (quoting Ex. 1021 [Rick] 1:48-50). But each of Rick's "frequency channels" is one of the two CDMA channels relied upon by the Petition for the disclosure of one of the two frequency ranges. Ex. 1021 [Rick] 3:15-16 ("A CDMA channel is a frequency channel for one CDMA signal."). Petitioner, thus, fails to show that two frequency channels/CDMA channels in Rick are within a "communication channel."

For the foregoing reasons, Petitioner fails to show Rick discloses or renders obvious claim 1.[2]

---

[2] Patent Owner takes no position on what may be required to perform the claimed method in "a wireless communication channel." Rather, the Petition is facially deficient for not addressing or even attempting to show this limitation is met, resulting in no *prima facie* case that Patent Owner could even respond to. *See* 37 C.F.R. § 42.104(b)(4) (The Petition "must identify" how "the construed claim is unpatentable."); *Facebook, Inc. v.Uniloc USA, Inc.*, IPR2017-01524, Paper 7, 19 (PTAB Dec. 4, 2017) (denying institution and refusing to "'ma[k]e an obviousness argument on behalf of petitioner' that 'could have been included in a properly-drafted petition,' because 'petitioner bears the burden of proof' and thus, the Board 'must base its decision on arguments that were advanced by a party,'" explaining, "It is not our role to pick out a theory for Petitioner") (alteration marks and

B. The Petition's Suzuki-Based Grounds Fail (Grounds 2-5, All Challenged Claims).

Grounds 2-5 are based on Suzuki and challenge all independent claims 1, 10, 17 and 24, and certain dependent claims. Pet., 4. Petitioner's Suzuki Grounds fail. Petitioner fails to even make a *prima facie* case of obviousness for claims 1 and 10 because it fails to address the limitation requiring the claimed method be performed in "a wireless communication channel." Section II.B.1. For claims 10 and 17, Petitioner relies on Suzuki's Figures 6 and 8, in the alternative, to contend that claims 10 and 17 are obvious. Yet, both of those theories suffer from fatal flaws, which is presumably why Petitioner sought to advance two theories to begin with. Section II.B.2. Finally, Petitioner fails to show obviousness of claim 24. Petitioner relies on Chen for the disclosure of the claim limitation requiring that a filter receive the down-converted signals output from two down-converters, but Petitioner misapprehends Chen, which does not disclose this limitation. Section II.B.3.

---

citations omitted, quoting *In re Magnum Oil Tools, Ltd.*, 829 F.3d, 1380- 81) (Fed. Cir. 2016)); *see also Dynamic Drinkware, LLC v. Nat'l Graphics, Inc.*, 800 F.3d 1375, 1378 (Fed. Cir. 2015) (citing *Tech. Licensing Corp. v. Videotek, Inc.*, 545 F.3d 1316, 1326–27 (Fed. Cir. 2008) (burden of proof never shifts to patent owner in an IPR)).

1. Petitioner Fails To Show That Suzuki Discloses Or Renders Obvious Independent Claims 1 And 10.

The preamble of claims 1 and 10 recites "[a] method of transmitting information in a wireless communication channel." Ex. 1001 ['802] cls. 1, 10. As discussed in Sections II.A.1- 2, the preamble's recitation of "in a wireless communication channel" is limiting and requires that the claimed method be performed in one "wireless communication channel." The Petition fails to show that Suzuki discloses or renders obvious the claimed method being performed "in a wireless communication channel."

Petitioner's argument that Suzuki discloses the preamble is a single sentence that does not even recite the word "channel," much less demonstrate "transmitting information in a wireless communication ***channel***":

> Suzuki discloses a predistorter for existing "multi-band wireless system[s]" that transmit a "multi-band transmission" making "use of one or more … frequency bands." Ex. 1004, ¶¶ 6-10, Ex. 1003, ¶ 96.

Pet., 18 (discussing claim 1); *see also* Pet., 30 (citing discussion of claim 1). Petitioner cites paragraph 96 of Dr. Almeroth's declaration which merely repeats the same statement verbatim without any citation to evidence, analysis or elaboration. Consequently, it is entitled to little weight. *Xerox Corp. v. Bytemark, Inc.*, IPR2022-00624, Paper 9, 15 (August 24, 2022) (precedential) (expert

testimony that "merely repeats, *verbatim*, the conclusory assertion for which it is offered to support," without any additional analysis, is entitled to little weight).

Nor does Petitioner point to any disclosure in Suzuki that would suggest Suzuki performs the claimed method in a single "wireless communication channel." In fact, the word "channel" does not appear in Suzuki.

Petitioner, thus, fails to show that its Suzuki grounds disclose or render obvious independent claims 1 and 10.

2. Petitioner Fails To Show That Suzuki Discloses Or Renders Obvious Independent Claims 10 And 17.

To challenge independent claims 10 and 17, Petitioner relies "on two alternative theories" arguing that "Suzuki's embodiments in Figures 6 and 8 render" these claims obvious. Pet., 30. With regards to Suzuki's Figure 6, Petitioner fails to show that it discloses first and second digital signals that contain data "to be transmitted." Instead, Petitioner points to pre-distortion signals that are cancelled by the distortion caused by the amplifier before transmission, and are neither transmitted nor contain data "to be transmitted." *See* Section II.B.2.i, *infra*. Petitioner's reliance upon Suzuki's Figure 8 fails for two reasons. First, Figure 8 does not disclose both a "first" and "second" upconverted signal. *See* Section II.B.2.ii.a, *infra*. Second, Petitioner relies upon Suzuki's Figure 17A for the disclosure of the claimed two frequency ranges with the specifically claimed properties, but that figure is inapplicable to Suzuki's Figure 8 embodiment, and the

balance of Suzuki states that its Figure 8 embodiment does not disclose the claimed frequency ranges. *See* Section II.B.2.ii.b, *infra*. These points are discussed in more detail below.

i. Petitioner's Reliance On Suzuki Fig. 6 Fails.

Suzuki's Fig. 6 does not disclose or render obvious either claim 10 or 17 because it fails to disclose first/second digital signals comprising first/second data "***to be transmitted***."

Claim 10 recites "receiving a first digital signal comprising first data ***to be transmitted***." Ex. 1001 ['802] cl. 10. Similarly, it recites "receiving a second digital signal comprising second data ***to be transmitted***." *Id*. Claim 17 similarly recites first and second digital signals comprising first and second data to be transmitted. *Id*., cl. 17. As discussed below, Petitioner contends that these limitations are satisfied by certain predistortion signals present in Suzuki's Figure 6. Pet., 31. Petitioner's argument fails, however, because these predistortion signals are never transmitted and do not contain any data that is ever transmitted. Indeed, the never transmitted predistortion signals are cancelled out by Suzuki's amplifier before the transmitted signals are transmitted.

Specifically, in the context of Suzuki Fig. 6, Petitioner relies on the output of the lookup tables 17-1 and 17-2 as the claimed first and second digital signals that allegedly contain the first and second data to be transmitted:

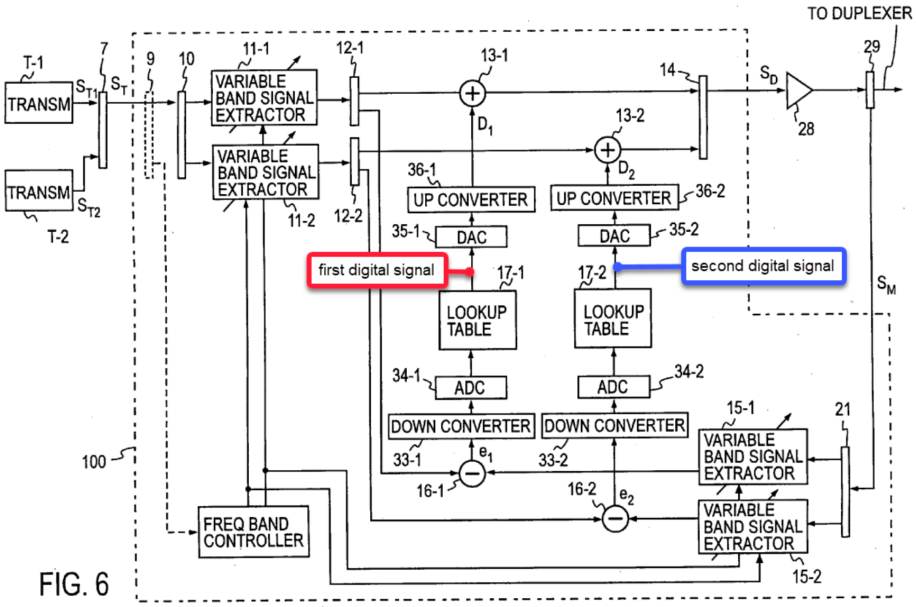

FIG. 6

Pet., 31. Petitioner, thus, relies on what it calls a "first digital signal" and "second digital signal" added in red and blue, respectively, in Petitioner's annotation.

Petitioner's argument fails, however, because these signals are not transmitted and do not contain data "to be transmitted." Rather, Suzuki is clear that the signals output from lookup tables 17-1 and 17-2 are merely pre-distortion signals that are cancelled in amplifier 28 prior to any transmission. Specifically, Suzuki discloses a "predistorter that compensates for a distortion of a power amplifier" in a transmitter. Ex. 1004 [Suzuki] [0001]. The amount of the predistortion that needs to be applied to the input signal of the power amplifier is determined through a lookup table. *Id.*, [0003]. Suzuki is clear that the output of lookup tables 17-1 and 17-2 are these pre-distortion components D_1 and D_2 that are intended to compensate for the distortion caused by the power amplifier 28:

> The distortion compensation data D_1 and D_2 read out from the lookup tables 17-1 and 17-2 are converted into analog signals at the DACs 35-1 and 35-2, further converted into high frequency signals at the up-converters 36-1 and 36-2 and provided to adders 13-1 and 13-2.

Ex. 1004 [Suzuki] [0063]. The adders 13-1 and 13-2 add the distortion compensation data D_1 and D_2 to the underlying signal that is first predistorted and then amplified (cancelling the predistortion) prior to transmission. *Id.*, [0047]; *see also id.*, [0046] ("The distortion compensation data are such one for canceling the detected distortion components.").

It is undisputed that the output of lookup tables 17-1 and 17-2 are predistortion compensation signals, and that Petitioner relies on this predistortion signals as the claimed first and second digital signals. Pet., 31 ("…used to receive predistortion compensation data from lookup tables 17-1 and 17-2, which are the first and second digital signal, respectively."). But, as is clear from the above, the output of lookup tables 17-1 and 17-2 (distortion compensation data D_1 and D_2) are not digital signals that are either transmitted by the transmitter or contain "data to be transmitted." Distortion compensation data D_1 and D_2 are not transmitted by the transmitter because they are cancelled by the distortion caused by the power amplifier when the signal is amplified before transmission. Distortion compensation data D_1 and D_2 also do not contain data to be transmitted; instead,

they merely contain distortion compensation components that are cancelled out before transmission.

Notably, Petitioner's flawed mapping of Suzuki Figure 6 to the claims is not an oversight. Rather, because the embodiment of Figure 6 is an "analog circuit," its input and processing are mostly analog, which do not meet the claim limitation requiring receiving a first/second "digital signal." Ex. 1004 [Suzuki] [0063]. The input and output of the lookup table 17-1 and 17-2 are the only digital signals in Figure 6 because those lookup tables "are implemented through digital signal processing." *Id*. Thus, Petitioner is forced to rely on these transitory, cancelled out digital signals which are never transmitted and contain no data that is ever transmitted.

For the foregoing reasons, Petitioner fails to show that Suzuki's Figure 6 embodiment discloses either claim 10 or 17.

ii. Petitioner's Reliance On Suzuki Fig. 8 Fails.

Petitioner fails to show that Suzuki's Figure 8 discloses or renders obvious either claim 10 or claim 17 for two independently sufficient reasons. First, Suzuki is not shown to disclose two distinct up-converted analog signals as claimed. *See* Section II.B.2.ii.a, *infra*. Second, Petitioner fails to show that the up-converted analog signals of Suzuki's Figure 8 contain two distinct frequency ranges with the specifically claimed properties. *See* Section II.B.2.i.b, *infra*.

a. Petitioner Fails To Show The Disclosure Of A First And A Second Up-Converted Signal.

Claim 10 recites "up-converting the first analog signal to a first RF center frequency to produce a ***first*** up-converted analog signal." Ex. 1001 ['802] cl. 10. Claim 10 then recites "up-converting the second analog signal to a first RF center frequency to produce a ***second*** up-converted analog signal." *Id*. Claim 17 recites similar limitations. *Id*., cl. 17. Thus, these claims plainly require two distinct up-converted analog signals. Petitioner fails to show that Suzuki Figure 8 discloses this limitation.

Petitioner relies on the output of the Digital-to-Analog Converters (DAC) 24-1 and 24-2 as the two claimed analog signals to be subsequently up-converted:

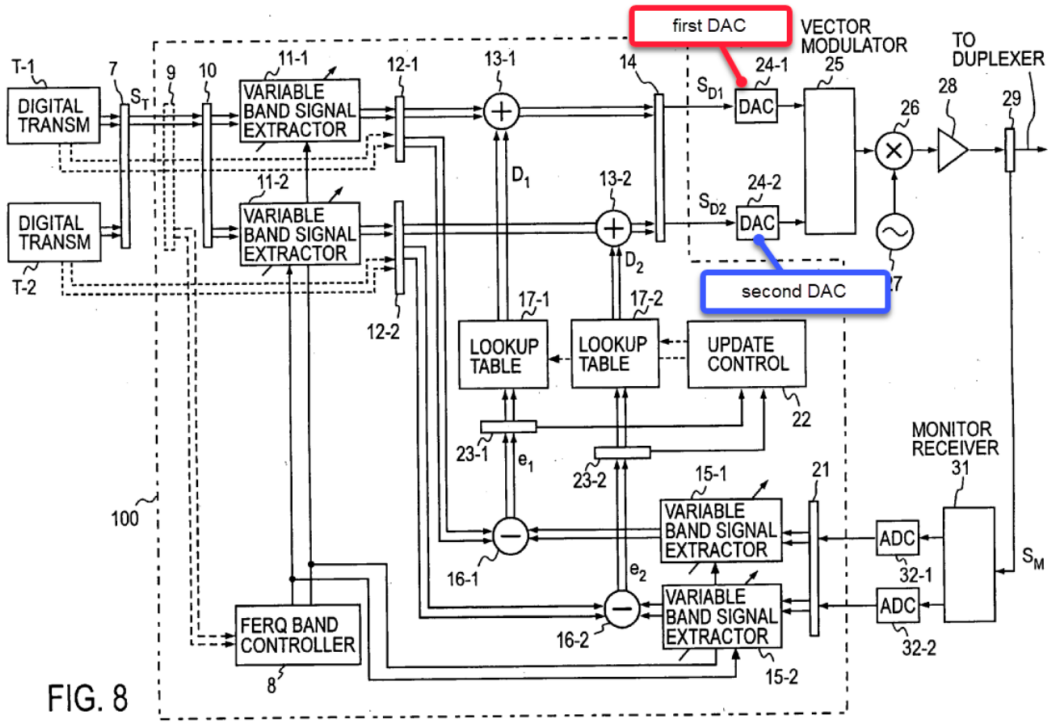

FIG. 8

Pet., 34. Petitioner next contends that the outputs of DAC 24-1 and 24-2 are up-converted in up-converter 26:

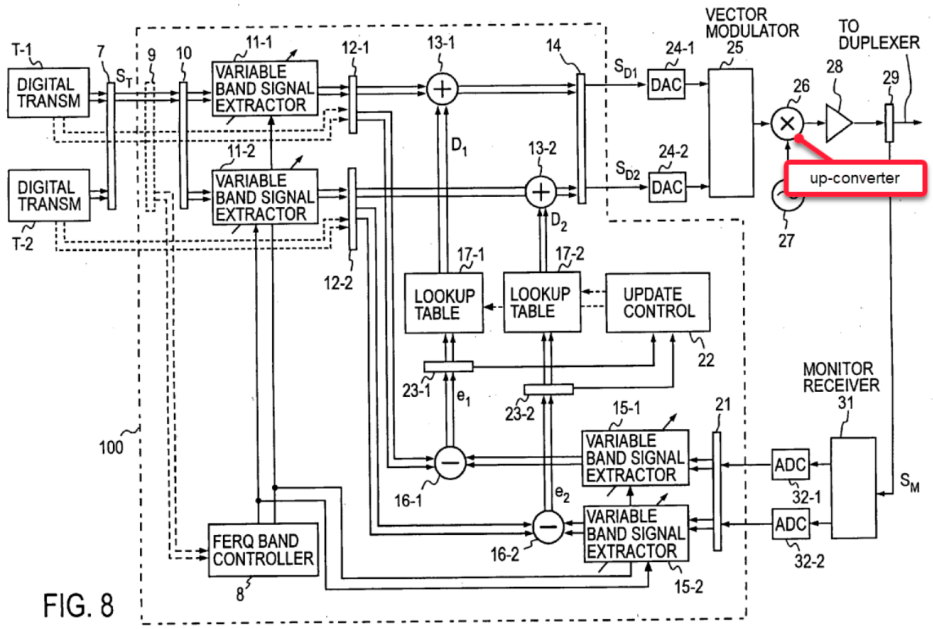

FIG. 8

Pet., 37. But as is clear from the figure above, the outputs of DAC 24-1 and 24-2 are not separately up-converted to produce a "first" and a "second" up-converted signal. Instead, they are combined in Vector Modulator 25 to produce a single combined signal, which is then transmitted to up-converter 26 to produce a single up-converted signal:

> The vector modulated ***signal*** is ***frequency-converted into <u>a</u> transmission signal*** of a radio frequency band by a carrier signal from a local oscillator 27 and power amplified at the power amplifier 28 and supplied to an antenna (not shown) via a duplexer (not shown).

Ex. 1004 [Suzuki] [0058]; *see also id.*, [0069] (explaining that Figure 8 is similar to Figure 5 as relevant for this discussion).

That Suzuki's Figure 8 produces a single up-converted signal is also clear from the figure itself, which shows a single line coming out of the up-converter 26:

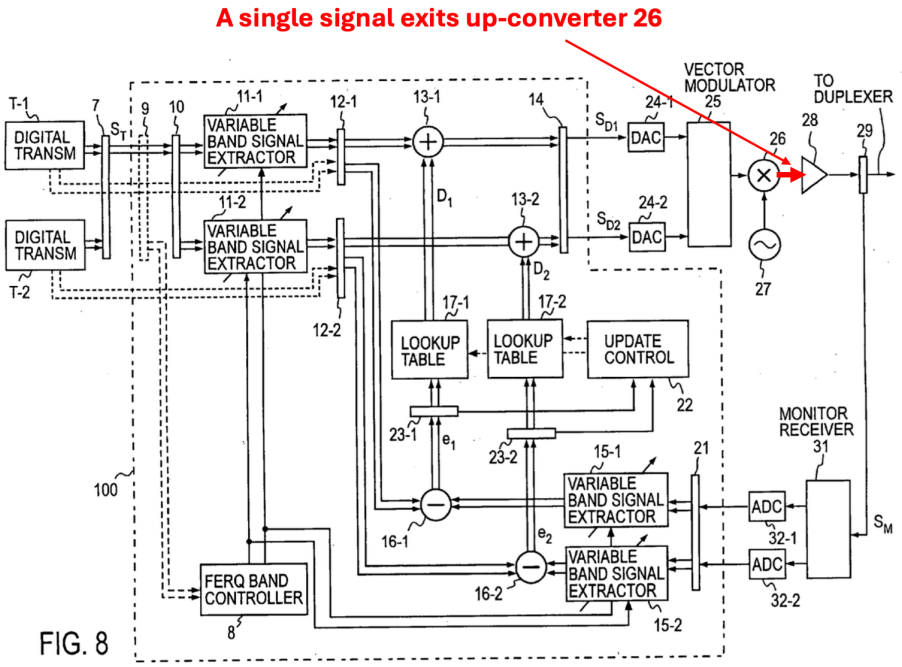

Petitioner also presents an alternate theory "[t]o the extent Patent Owner argues frequency-converter 26 is not an up-converter." Pet., 37. Under that theory, Petitioner proposes adding up-converters to the output signals of DAC 24-1 and 24-2. *Id*. However, Patent Owner does not at this stage dispute that element 26 is an up-converter. Therefore, Petitioner's alternative theory to add additional up-converters to Suzuki's Figure 8 is on its own terms inapplicable to this POPR. Specifically, the signal in pre-distorter of Figure 8 is already a baseband signal which is subsequently up-converted by converter 26, and therefore there is no need to make the alternate modification proposed by Petitioner to add additional up-

converters. *See* Pet., 37 (explaining the motivation for its alternate theory as the more efficient processing of baseband signals).

For the foregoing reasons, Petitioner has not shown that Suzuki's Figure 8 discloses or renders obvious either claim 10 or claim 17.

b. Petitioner Fails To Show Disclosure Of Two Up-Converted Frequency Ranges As Claimed.

Claims 10 and 17 also require two distinct up-converted frequency ranges with specific properties. Specifically, Claim 10 recites that "the first up-converted analog signal comprises ***a first up-converted frequency range***" that spans one-half of the up-converted frequency range on either side of the first RF center frequency. Ex. 1001 ['802] cl. 10. Claim 10 further recites "the second up-converted analog signal comprises ***a second up-converted frequency range***" that spans one-half of the up-converted frequency range on either side of the first RF center frequency. *Id*. Claim 10 further recites that the "frequency difference between the first RF center frequency and the second RF center frequency is greater than the sum of one-half the first frequency range and one-half the second frequency range." *Id*. Claim 17 recites corresponding limitations. Therefore, both claims recite two distinct up-converted frequency ranges with specifically claimed properties.

Under its alternative theory under Figure 8, Petitioner, again, relies upon Suzuki's Figure 8's predistorter. Pet., 30. To argue that the output of Suzuki Figure 8's predistorter contains two separate up-converted frequency ranges with

the specifically claimed properties, Petitioner relies on Suzuki Figure 13A, which discloses a graph showing a signal with two different frequencies bands. Pet., 34 ("... Suzuki's predistorter carries each predistorted signal across one of the frequency bands of the output signal (first and second frequency ranges), such as depicted in Figure 13A …"); *see also* Pet., 18-20.

Petitioner assumes that Figure 13A applies to Figure 8's embodiment and shows the frequency profile of the signal output from Figure 8's predistorter. Pet., 34, 18-20. As explained below, however, contrary to Petitioner's assumption, Suzuki never discloses that its Figure 13A frequency profile applies to the output signal of Figure 8's predistorter and, in fact, states that Figure 8's output signal contains a single frequency band, not two frequency bands as shown in Figure 13A. Petitioner makes no attempt to show that Figure 8 otherwise discloses the claimed frequency ranges and, therefore, fails.

Suzuki's Figure 8 is part of Suzuki's "fifth embodiment." Ex. 1004 [Suzuki] [0069]. Suzuki Figure 13A, by contrast, is a part of Suzuki's "eighth embodiment" (Fig. 12). Ex. 1004 [Suzuki] [0078]-[0079]. Significantly, Suzuki confirms that the "eighth embodiment" does not relate to Figure 8. Rather, as Suzuki makes clear, the eighth embodiment discloses a "frequency band controller 8" for the embodiments disclosed in Figures 1, 6, 7 and 9, but ***not*** Figure 8:

> FIG. 12 shows an exemplary configuration of a frequency band controller 8 for automatically controlling the variable band signal extractors 11-1, 11-2, 15-1 and 15-2 in the embodiment of each analog predistorter shown in ***FIGS. 1, 6, 7 and 9***.

Ex. 1004 [Suzuki] [0078]; *see also* Antonin Scalia & Bryan A. Garner, Reading Law: The Interpretation of Legal Texts 93 (2012) ("This premise follows the statutory canon known as the 'Omitted-Case Canon,' meaning nothing is to be added to what the text states or reasonably implies (*casus omissus pro omisso habendus est*). That is, a matter not covered is to be treated as not covered.").

Thus, Suzuki never discloses that the Figure 13A frequency profile applies to the output signal of Figure 8's predistorter; it instead confirms that Figure 13A does ***not*** apply to Figure 8. But that is not all. Suzuki further states that the output signal of Figure 8's pre-distorter contains only a single frequency band, not two frequency bands as shown in Figure 13A (and as required by the claims). Specifically, Suzuki explains that its Figure 8 embodiment is similar to its Figure 5 embodiment, except that the lookup tables 17-1 and 17-2 in the Figure 8 embodiment can be updated. Ex. 1004 [Suzuki] [0069]. In its Figure 5 embodiment, Suzuki discloses the output signal of the pre-distorter as containing a single frequency band, not two distinct frequency bands as disclosed in Figure 13A:

> The vector modulated signal is frequency-converted into a transmission signal ***of a radio frequency band*** by a carrier signal from a local oscillator 27 and power amplified at the power amplifier 28 and supplied to an antenna (not shown) via a duplexer (not shown).

Ex. 1004 [Suzuki] [0058].

Petitioner does not address any of the above. Petitioner does not address why it believes Suzuki's Figure 13A applies to the Figure 8 embodiment when Suzuki states that it does not. Nor does Petitioner address why it believes Suzuki's Figure 8 embodiment discloses two distinct frequency ranges as claimed when Suzuki discloses only a single frequency band.

Therefore, Petitioner has failed to meet its burden to show that Suzuki's Figure 8 embodiment discloses either claim 10 or 17.

3. Petitioner Fails To Show That Suzuki/Chen Discloses Or Renders Obvious Independent Claim 24.

Ground 4 challenges independent claim 24 based the combination of Suzuki and Chen. As explained below, Ground 4 fails.

Claim 24 requires "a first down-converter" that outputs a "first down-converted signal," and "a second down-converter" that outputs a "second down-converted signal." Ex. 1001 ['802] cl. 24. The claim then recites a filter that "receives the first and second down-converted signals." *Id*. Petitioner contends that this limitation is disclosed by Chen, relying on Chen's down-converters 306

and 310 as the claimed first and second down-converters, and on Chen's filter 328c as the claimed filter. Pet., 70. Petitioner then argues that the outputs of Chen's down-converters 306 and 310 are "provided directly to [Chen's] filter 328c." Pet., 70 (citing Ex. 1009 14:13-15).

Petitioner, however, misapprehends Chen. As explained below, the analog outputs of Chen's down-converters 306 and 310 are ***not*** received by Chen's filter 328c. Rather, the analog outputs are converted to digital signals in the Analog to Digital Converter 322. It is these modified, digitalized signals, not the analog outputs of down-converters 306 and 310, that are provided to the filter 328c. Therefore, Chen does not disclose that the "first" and "second" "down-converted signal[s]" output from the two down-converters are "receive[d]" by the claimed "filter." In this regard, Petitioner's mapping of Chen is the exact opposite of the '802's embodiments, where the down-converted signals are provided to the filter first and, only thereafter, are changed from analog to digital.

Petitioner relies on Chen's Figure 6 embodiment for the disclosure of a filter (blue) that purportedly receives the claimed first and second down-converted signals output from the two downconverters (green and orange):

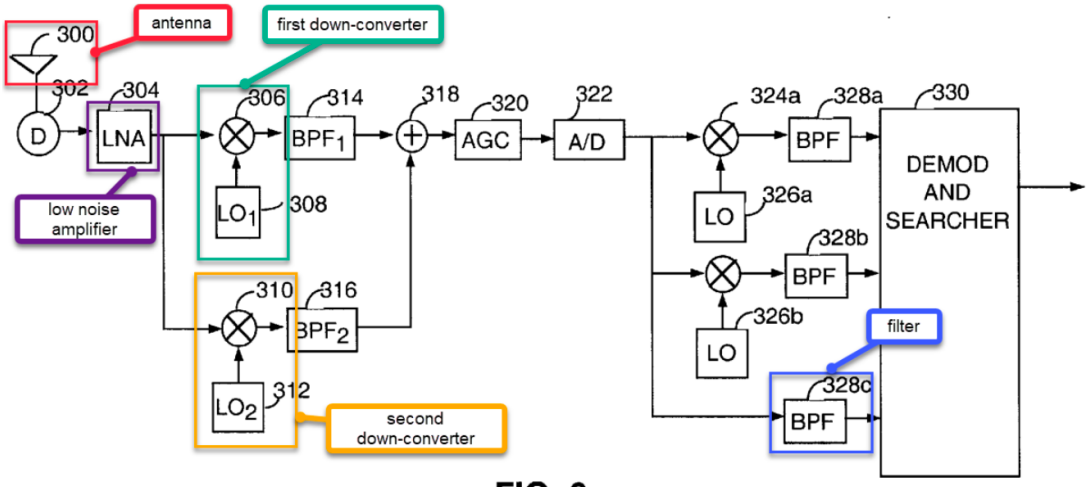

FIG. 6

Pet., 70. As explained below, however, Chen's filter 328c does not receive the ***analog*** down-converted signals output from down-converters 306 and 310. Rather, it receives different, ***digital*** signals.

Chen's Figure 6 embodiment is explained with reference to the annotated version of Figure 6 below, demonstrating that filter 328c does not receive the analog outputs of down-converters 306 and 310. Down-converter 306 (green) down-converts signals 250a, 250b and 250c. Ex. 1009 [Chen] 13:63-66. Down-converter 310 (orange) down-converts signal 252a. *Id.*, 14:1-3. The outputs of the down-converters 306 and 310 are combined and then pass through (among other circuit elements) analog to digital converter (A/D 322) (purple), where the signals are converted from analog to digital. *Id.*, 14:7-12. It is these modified, digitalized signals 250a and 252a—not the analog outputs of down-converters 306 and 310—that are provided to filter 328c (blue). *Id.*, 14:13-15.

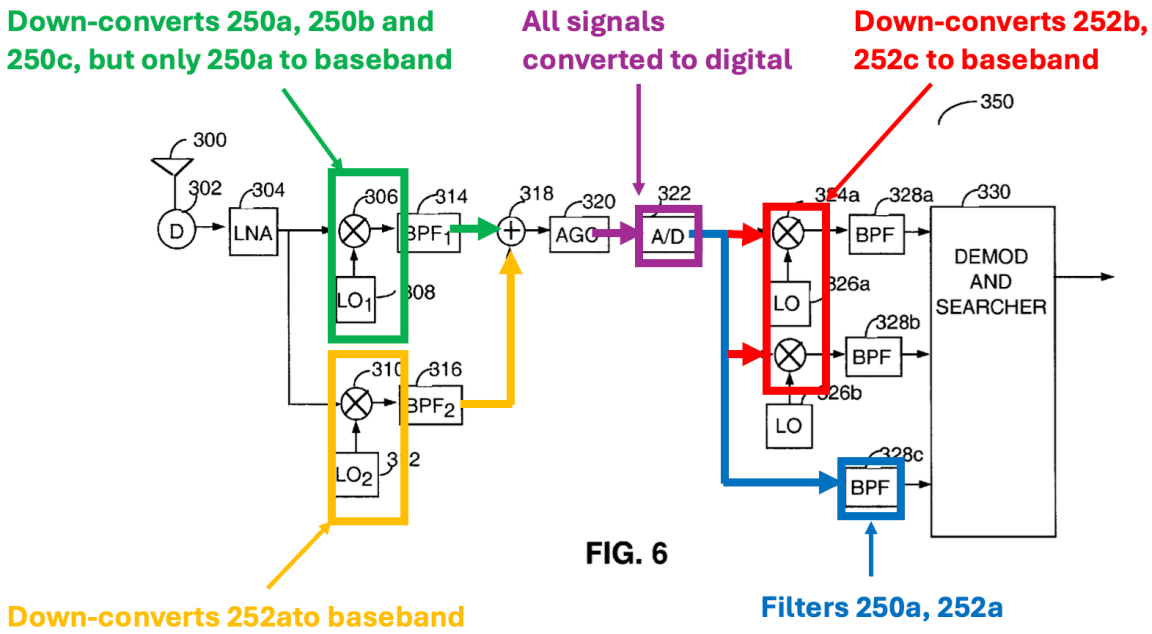

FIG. 6

The ’802’s specification further supports the understanding that Chen’s filter does not disclose receiving the claimed first and second down-converted signals. For example, the ’802’s Figure 9 (reproduced in annotated form below) discloses a receiver embodiment where the claimed filter 906 (blue) receives the first and second down-converted signals from down-converters 904 and 905 (green and orange), before those signals are converted to digital signals by Analog to Digital Converter 907 (purple):

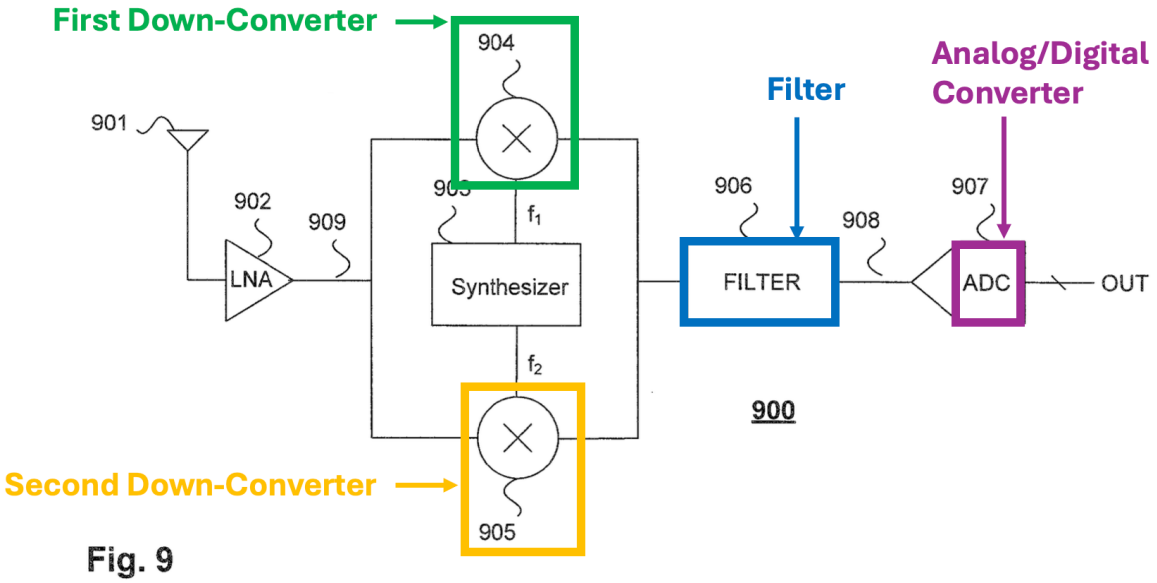

Fig. 9

Ex. 1001 ['802] Fig. 5; *see also id.*, 11:60-64. The '802's process wherein analog signals are sent to the filter and then converted from analog to digital is, thus, the exact opposite of Chen's process which converts the signals from analog to digital prior to being received by the filter.

Further supporting the fact that a POSITA would not have understood the analog output of downconverters 306 and 310 to be the same signal that is in the digitalized input of the filter 328c, analog and digital signals have distinct and recognized differences. For example, as a textbook provided by Petitioner itself explains, over a given time interval, "an infinite number of possible different" analogue waveforms exist, "in contrast to only a finite number of possible digital messages." Ex. 1023 [Lathi] 11-12. This is because a digital signal contains only

binary messages, whereas an analog signal is "characterized by data whose values vary over a continuous range." *Id*. As another example, in a digital signal:

> the data can be recovered correctly as long as the distortion and the noise are within limits. In contrast, the waveform in an analog message is important, and even a slight distortion or interference in the waveform will cause an error in the received signal. Clearly, a digital communication system is more rugged than an analog communication system in the sense that it can better withstand noise and distortion (as long as they are within a limit).

Ex. 1023 [Lathi] 11. As another difference, Lathi explains, "[t]he main reason for the superiority of digital systems over analog ones is the viability of regenerative repeaters in the former." *Id*.

Ignoring Chen's disclosure, the '802's teachings, and the fundamental difference between analog and digital signals, Petitioner argues:

> Chen discloses the output of the mixer 306 and downconverter 310 are, after downconversion, "already at baseband" and "provided directly to filter 328c." Ex. 1009, 14:13-15.

Pet., 70. Petitioner misapprehends the cited portion of Chen which, read in the context of the embodiment, does not change the fact that the output of the downconverters 306 and 310 are analog signals that are changed to digital before being provided to filter 328c. This is explained below.

As noted in connection with Chen's annotated Figure 6 above, that embodiment processes four signals: 250a, 250b, 250c and 252a. Ex. 1009 [Chen] 13:51-57. Down-converter 310 (orange) only processes signal 252a and down-converts it to baseband. *Id*., 14:1-6. The remaining three signals 250a, 250b and 250c are all down-converted by mixer 306 (green), but only signal 250a is down-converted all the way to baseband. *Id*., 13:63-66, 14:10-14. The other two signals, 250b and 250c, are down-converted to an intermediate frequency. *Id*. The signals 250b and 250c are later down-converted to baseband in down-converters 324a and 324b (red) after being converted to digital signals (purple). *Id*., 14:10-16. This process is schematically shown in the annotated Fig. 6 above.

In this context, Chen explains that, after signals 250a and 252a are converted to digital signals in A/D 322 (blue), they are "provided directly" to filter 328c since they are already down-converted to baseband and, unlike signals 250b and 250c, do not need further down-conversion:

> The filtered signal from filter 314 is summed with the filtered signal from filter 316 in summer 318. ***The summed signal is amplified*** by automatic gain control (AGC) 320. ***The amplified signal is provided to analog to digital (A/D) converter 322.*** The digital signals are provided to downconverters 324a, 324b and filter (BPF) 328c. ***Downconverters 324a and 324b bring the signals carried on carriers 250b and 250c down to base band. The signal carried on carriers***

250a and 252a are already at baseband and is provided directly to filter 328c.

Ex. 1009 [Chen] 14:7-16. Thus, as is clear, Chen's statement that the signals 250a and 252a are "provided directly to filter 328c" does not mean that the down-converted signals that are the outputs of the down-converters 306 and 310 are "provided directly" to filter 328c. Instead, "provided directly" refers to the fact that the signals are already at baseband and do not need to be further down-converted before being sent to the filter 328c. Ex. 1009 [Chen] 14:13-15. Chen is clear that the output of down-converters 306 and 310 are summed, then changed to digital signals, and it is these modified, digital signals that are transmitted to filter 328c, not the analog output of the down-converters.

In short, once the analog outputs of the down-converters 306 and 310 in Chen are modified and converted to digital signals in the A/D 322, they are no longer the down-converted signals that were output from the down-converters 306 and 310. They are instead, different signals with fundamentally different characteristics. This is confirmed by the '802 patent which teaches providing analog signals to the filter ***before*** converting them into digital signals, and by Petitioner's own Exhibit 1023 [Lathi]. For the foregoing reasons, Petitioner fails to show that Chen discloses or renders obvious claim 24.

C. The Petition's Fernandez-Based Grounds 6-9 Fail.

Fernandez-based Grounds 6-9 challenge all independent claims 1, 10, 17 and 24, as well as certain dependent claims. Pet., 4. Petitioner fails to even make a *prima facie* case of obviousness for claims 1 and 10 because it fails to address the limitation requiring the claimed method be performed in "a wireless communication channel." *See* Section II.C.1. For claim 17, while the claim requires that the first and second digital signals be provided by a "baseband digital system," Petitioner fails to make a *prima facie* case of obviousness by failing to point to any "baseband digital system" at all, let alone one that provides its putative first and second digital signals. *See* Section II.C.2. Petitioner also fails to show obviousness of claims 10 and 17 for an additional reason. Both claims require an amplifier that receives two up-converted signals. Fernandez undisputedly does not disclose this limitation because it utilizes a different amplifier for each signal, and Petitioner fails to show how or why a POSITA would have modified Fernandez in view of Montojo to meet the claims. *See* Section II.C.3. Finally, Petitioner fails to show that the Fernandez Grounds render obvious claim 24 for the same reasons discussed in connection with the Suzuki Grounds: Chen's filter does not receive the output signals of its up-converters. *See* Section II.C.4. These points are discussed in more detail below.

1. Petitioner Fails To Show That Fernandez Performs The Claimed Method "In A Wireless Communication Channel." (Claims 1, 10).

The preamble of claims 1 and 10 recites "[a] method of transmitting information in a wireless communication channel." Ex. 1001 ['802] cls. 1, 10. As discussed in Sections II.A.1- 2, the preamble's recitation of "in a wireless communication channel" is limiting and requires performing the claimed method in one "communication channel." The Petition relies on Fernandez alone for the disclosure of the preamble but fails to show that it discloses the claimed method "in a wireless communication channel." Pet., 79.

Petitioner's argument that Fernandez discloses the preamble is a single sentence that does not even recite the word "channel":

> To the extent the preamble is limiting, Fernandez discloses "summing the output of multiple *signal generators* is a common technique to create multi-carrier *wireless signals*." Ex. 1005, ¶8; Ex. 1003, ¶239.

Pet., 79 (discussing claim 1); *see also* Pet., 86 (citing discussion of claim 1). The cited portion of Petitioner's expert declaration (Ex. 1003, ¶ 239) merely repeats the Petition's deficient showing without any further citation, analysis or elaboration and is therefore entitled to no weight. *Xerox Corp. v. Bytemark, Inc.*, IPR2022-00624, Paper 9, 15 (August 24, 2022) (precedential) (expert testimony that "merely repeats, *verbatim*, the conclusory assertion for which it is offered to support," without any additional analysis, is entitled to little weight).

Nor is there otherwise any indication that Fernandez performs the claimed method in a single "wireless communication channel." Petitioner exclusively relies on Fernandez's discussion of its prior art for the alleged disclosure of claims 1 and 10. Pet., 78-82 (citing Ex. 1005 [Fernandez] ¶¶ 5, 8-9 & Figs. 2A-2B). Petitioner argues that each signal generator in Fernandez's prior art (Fig. 2A) produces one of the two claimed data across a first and second frequency ranges. Pet., 79. Fernandez explains that ***each*** of the data generators in Fig. 2A contain an I and a Q channel. Ex. 1005 [Fernandez] [0005] ("Each channel may be fed through reconstruction filters 13, 14, which remove higher order spectral images of the con- verted signal."). Fernandez further explains that its prior art approach, relied upon by Petitioner, only "works well for a given multi-channel communication format." *Id*., [0009]. There is no indication that all of these multiple channels are themselves within one "communication channel."

Therefore, there is no indication in Fernandez, and Petitioner has not pointed to any, that Fernandez's method operates within a single "wireless communication channel."

2. <u>Petitioner Fails To Point To "A Baseband Digital System" That Provides A First And A Second Baseband Signal. (Claim 17).</u>

Claim 17 recites "[a] wireless communication system comprising: a baseband digital system for providing a first digital signal comprising a first data to be transmitted and a second digital signal comprising a second data to be transmit-

ted." Ex. 1001 ['802] cl. 17. Thus, the "baseband digital system" provides both the first and second digital signals to be transmitted. Petitioner contends that Fernandez discloses this limitation by pointing to two digital signals (Pet., 96), but fails to identify any "baseband digital system" that provides these two signals *(i.e.*, the putative first and second digital signals). Pet., 96.

Petitioner argues that "Fernandez further discloses a baseband digital system." Pet., 96 (citing Ex. 1005 [Fernandez] [0006]). The cited portion of Fernandez, however, only discloses the "[s]tandard notation for complex baseband and passband signals." Ex. 1005 [Fernandez] [0006]. In other words, it discloses the mathematical formula for representing a baseband signal. *Id*. But it says nothing whatsoever about "a baseband digital system," much less one that provides the claimed first and second digital signals.

The Petition (at 96) also cites its discussion of limitation 10a, but that does not help it either. There, Petitioner relies upon the following version of Fernandez's Figure 2A, and specifically on "data 1" and "data 2," which Petitioner identifies as the claimed first and second digital data signals.:

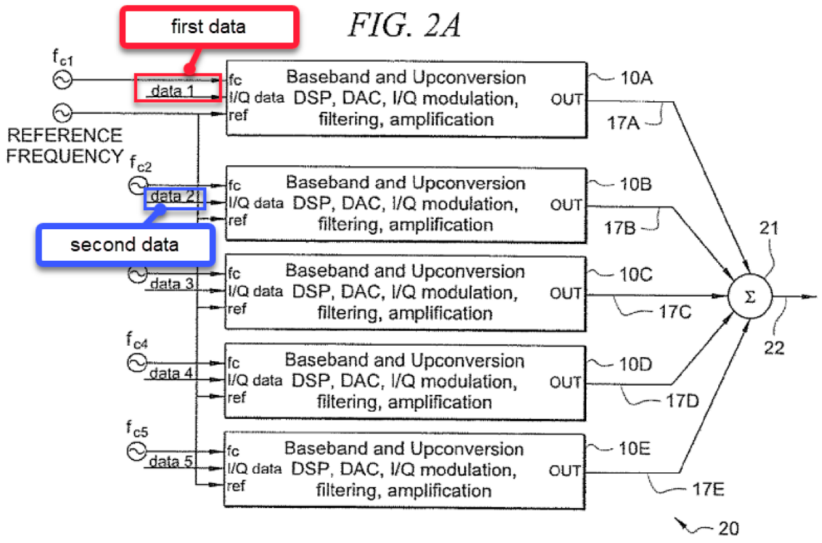

Pet., 87. Figure 2A, however, does not disclose where data 1 and data 2 originate from. Neither the figure, nor the corresponding disclosure indicate that these data signals are sent from a "baseband digital system." *See also* Ex. 1005 [Fernandez] [0008]. Even Petitioner's own allegations only state that "[a]s depicted in [Fernandez's] Figure 2A, each signal generator receives input 'data' resulting in RF signals 17A-17E," but says nothing about the where the input data originates from. Pet., 86.

The Petition (at 96) also cites Ex. 1005 [Fernandez] [0011], which states that "a general method is provided to increase a digitally synthesized signal's bandwidth by frequency interleaving." This statement, however, is irrelevant. It says nothing whatsoever about "a baseband digital system" much less one that provides the first and second digital signals. It merely discloses how to frequency interleave multiple narrower bandwidth signals to create a continuous wider band

signal. *Id*. It does not disclose the source of the multiple narrower bandwidth signals and does not disclose that they are provided by "a baseband digital system."

And, even if, counter-factually, Fernandez's ¶ 11 were relevant to the limitation-in-question, Petitioner's argument would still fail. Paragraph 11 concerns "embodiments of [Fernandez's] ***present invention*** …" But Petitioner does not rely on Fernandez's present invention. Rather, it has otherwise exclusively relied upon Fernandez's discussion of admitted prior art for all other claim limitations. Pet., 86-96 (citing Ex. 1005 [Fernandez] ¶¶ 5-6, 8-9 & Figs. 1, 2A-2B). Petitioner does not demonstrate why the teachings of Fernandez's invention apply to the prior art Fernandez claims to have improved upon, nor does it explain how a POSITA would modify Fernandez's prior art in view of its invention to satisfy the claims or why a POSITA would be motivated to do such a thing with a reasonable expectation of success. For example, Fernandez's invention produces signals that have completely different frequency profiles than the signals Petitioner relies upon for the alleged disclosure of the claims. *Compare* Ex. 1005 [Fernandez] Fig. 2A (frequency profile of Fernandez's prior art relied upon by Petitioner) *with* Fig. 6 (frequency profile of a Fernandez embodiment).

For the foregoing reasons, Petitioner fails to show that the Fernandez grounds disclose claim 17.

3. Petitioner Fails To Show That A POSITA Would Have Been Motivated To Combine Fernandez And Montojo As Proposed (Claims 10, 17).

Claim 17 recites "a power amplifier" that receives the first and second up-converted signals. Ex. 1001 ['802] cl. 17. Similarly, claim 10 recites "amplifying the combined up-converted signal in a power amplifier." *Id.*, cl. 10. It is undisputed that Fernandez does not disclose either limitation. Specifically, as shown in Fernandez's Fig. 2A, each RF signal generator 10A-10E has its own power amplifier, and the amplified RF signals are then summed together in summer 21. Therefore, there is no single power amplifier in Fernandez that receives and amplifies both the first and second up-converted signals.

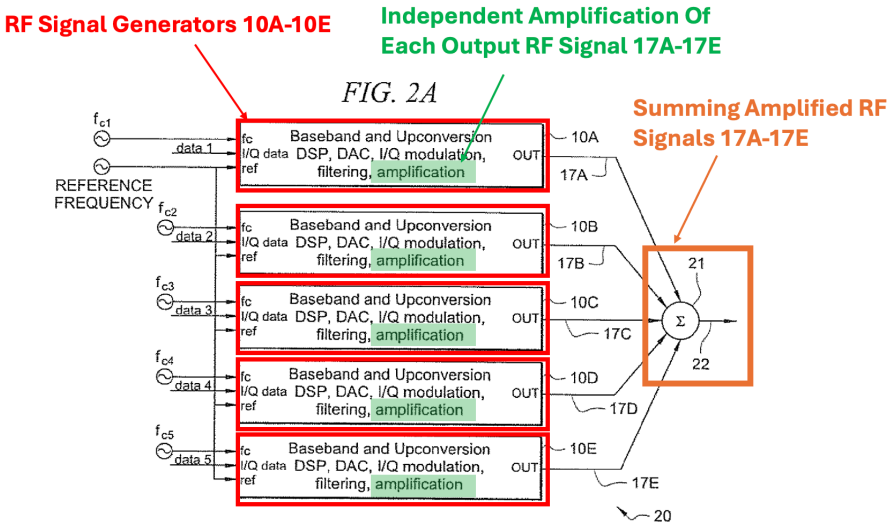

To remedy this deficiency, Petitioner relies upon the combination of Fernandez and Montojo. Pet., 94 (discussing claim 10), 97 (relying on discussion

of claim 10 for claim 17); *see also* Ex. 1003 [Almeroth Decl.] ¶ 273 ("In my opinion, Fernandez in view of Montojo renders obvious this limitation."). Petitioner, however, has failed to show why and how a POSITA would have modified Fernandez in view of Montojo.

Montojo explains that even though it may be desirable to share an amplifier among different carriers, it is not practical to do so if all carriers are to be amplified based on their needs:

> If a multi-carrier terminal has a single power amplifier for simultaneous transmission of different types of carrier signals, the power amplifier may be subject to ***power constraints imposed by spectral emission requirements, by on-board battery capacity, and also by any priority among the carriers.***

Ex. 1006 [Montojo] [0007].

To address this problem, Montojo discloses an apportionment system where the power amplifier amplifies the highest priority carrier according to its needs and will amplify the next priority carrier(s) only to the extent any amplification power is left over. Ex. 1006 [Montojo] [0009]-[0010]. This is also precisely how Montojo's Figure 5 embodiment relied upon by Petitioner works. Pet., 77, 95. Specifically, Montojo explains that the power amplifier accesses a "priority list 512" to obtain the priority and power needs of the different carriers. *Id*., [0045]. Then:

> According to the priority appointment scheme, the highest priority carrier is allocated as much of MaxTxPowerAnalog as is necessary to satisfy whatever transmission requirements apply to it. Any lower-priority carrier (say, carrier y) will be accorded whatever remains of MaxTxPowerAnalog after allocation to active carriers with higher priority.

Ex. 1006 [Montojo] [0045].

Petitioner has not shown if Montojo's priority-based power amplifier would be desirable or even functional in a system such as Fernandez, which is why Fernandez discloses that each signal generator has its own power amplifier to begin with. Specifically, Fernandez is directed at "wideband signal generation." Ex. 1004 [Fernandez] [0001]. Similarly, in its background of the invention (relied upon by Petitioner), Fernandez discusses a system for generating wideband signals. *Id*., [0005] ("A desire often arises for generating a wideband digital signal."). Fernandez discloses that this wideband signal is generated by summing together multiple narrower band signals. *Id*., [0008]. This wideband signal generated by summing together narrower band signals (as Fernandez explains was done in its prior art) is shown in Fig. 2A, where all narrow band signals 17A-17E are shown as substantially equally amplified:

FIG. 2B

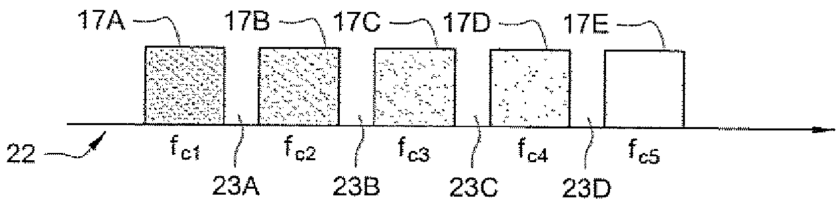

Petitioner makes no attempt to show how (or why) a priority-based amplifier that amplifies only the first signal based on its needs and may or may not amplify other signals depending on the left-over, would be either functional or desirable in Fernandez. For example, Petitioner does not address how Fernandez's system would work if the first signal (17A in Fig. 2A) is fully amplified, but the second signal (17B in Fig. 2B) is only partially amplified, and the remaining signals are not amplified at all. *Samsung Elecs. Co. Ltd. v. KAIST IP US LLC*, IPR2017-01046, Papers 12 at 18-20 (Oct. 2, 2017) and 14 at 7 (Jan. 22, 2018) (holding that "[a]lthough proof of physical or bodily incorporation is not required," petitioner failed "to explain sufficiently *how* a POSA would have implemented Hieda's source/drain contact areas in Inaba's device," where compatibility of references was neither "self-evident" nor explained) (emphasis in original); *Alcon Inc. v. AMO Dev., LLC*, IPR2021-00853, Paper 48, 50-56 (Dec. 2, 2022) ("the evidence supports that it would have been no[t] simple or well-understood or obvious matter to make the combination" where, *inter alia*, "Petitioner never satisfactorily explains just how the combination would work"); *see also Canon, Inc. v. WSOU*

Invests., LLC, IPR2022-01532, Paper 14, 18-21 (Apr. 14, 2023) (rejecting a combination where "Petitioner has not provided sufficient details about how its proposed combination would work."); *Acclarent, Inc. v. Albritton*, IPR2018-00268, Paper 12, 7-8 (Jan. 31, 2019) (the Petition's "allegations amount to little more than an opinion that one would have combined the references in a manner to allow performance of the claimed method step, without sufficient guidance as to how and why [a POSITA] would do so.").

Nor does the combination of Fernandez and Montojo otherwise render obvious using a single amplifier in Fernandez. Montojo teaches a POSITA that using a single amplifier has substantial, and potentially impractical, drawbacks. Ex. 1006 [Montojo] [0007] ("the power amplifier may be subject to power constraints imposed by spectral emission requirements, by on-board battery capacity, and also by any priority among the carriers."); [0008] ("it would be desirable that the power of the multi-carrier waveform transmitted by the multi-carrier terminal be limited to a level such that spectral emission goals are not compromised. It is further desirable to preserve these power constraints while requiring little modification to the equipment and operation of existing communication systems.").

It is because of these drawbacks that Montojo discloses a need in the art for a system that would allow practically sharing a single power amplifier, which

Montojo teaches a POSITA to be possible through its priority-based apportionment discussed above:

> Therefore, there is a need in the art for a scheme for allocating the transmit power of a carrier according to a priority in a multi-carrier terminal in which a single power amplifier is utilized for transmitting a plurality of carrier signals simultaneously.

Ex. 1006 [Montojo] [0009].

In light of the drawbacks and obstacles of using a single amplifier that would amplify multiple carriers, Petitioner also does not perform any balancing of benefits and drawbacks to prove that a POSITA would in fact be motivated to modify Fernandez's disclosed system to use a single power amplifier for all carriers. *See, e.g.*, *Arctic Cat Inc. v. Polaris Indus.*, 795 Fed. Appx. 827, 833 (Fed. Cir., 2019) ("[t]he Board must weigh the benefits and drawbacks of the modification against each other, to determine whether there would be a motivation to combine.") (citing *Winner Int'l Royalty Corp. v. Wang*, 202 F.3d 1340, 1349 n.8 (Fed. Cir. 2000)).

For the foregoing reasons, Petitioner has not shown that the combination of Fernandez and Montojo discloses the claims.

4. Petitioner Fails To Show That Fernandez-Chen Disclose Independent Claim 24.

For claim 24, Petitioner exclusively relies on its discussion in Ground 4 (based on Suzuki). Pet., 100 ("As discussed in Ground 4, Chen describes a receiver that processes multi-carrier wireless transmissions as claimed by claims 14 and 24. … And it would have been obvious to combine the Fernandez-Montojo transmitter with Chen's receiver for the same reasons discussed in Ground 4 ….").

However, as discussed in Section II.B.3 with respect to Ground 4, Chen does not disclose a filter that receives the upconverted signals output from the first and second claimed up-converters. Therefore, for the same reasons, Petitioner has failed to show that the Fernandez-based grounds disclose claim 24.

III. THE PETITION SHOULD BE DENIED UNDER *FINTIV*.

As shown above, Petitioner fails to meet the minimum threshold for institution as it fails to show a reasonable likelihood of prevailing on the merits as to any challenged claims. The Board, however, does not even need to reach that question because the Board should exercise its discretion to deny institution under *Fintiv*. *See Apple Inc. v. Fintiv, Inc.*, IPR2020-00019, Paper 11 (Mar. 20, 2020) (precedential) ("*Fintiv* Order"); *NHK Spring Co. v. Intri-Plex Technologies, Inc.*, IPR2018-00752, Paper 8, 19–20 (Sept. 12, 2018) (precedential).

Under *Fintiv*, the Board considers six factors, all of which support denial of institution:

- Factor 1: No stay of the parallel district court litigation has been granted or even sought. Petitioner also has not indicated that it would seek a stay if institution is granted.
- Factor 2: The district court trial will occur months before the final written decision deadline.
- Factor 3: There will be substantial work completed in the district court trial before a decision on institution here.
- Factor 4: There is substantial overlap in both the claims and art at issue in this proceeding and the district court case, and Petitioner does not offer any stipulation to reduce this overlap.
- Factor 5: Petitioners are the defendants in the parallel litigation.
- Factor 6: The Petition fails to present a compelling challenge on the merits.

Each of these factors is addressed in more detail below.

A. *Fintiv* Factor 1: The District Court Has Not Granted A Stay, Nor Is There Any Evidence That A Stay Will Be Granted.

Under the first *Fintiv* factor, the Board considers "whether the court granted a stay or evidence exists that one may be granted if a proceeding is instituted." *Fintiv* Order at 6. Here, Petitioner has not sought a stay in the district court, and therefore none has been granted. *See generally* Ex. 2003 [Docket]. The Petition also does not indicate that Petitioner will seek a stay in the district court if this

proceeding is instituted. Pet., 101-102. Nor does Petitioner present any evidence that the district court would grant a stay if this proceeding is instituted. *Id*. Notably, this factor does not require the Board to speculate as to whether a stay may be granted, but only if "evidence exists" that a stay may be granted if the proceeding is instituted. *Fintiv* Order at 6. No such evidence exists here. Therefore, this factor conclusively weighs against institution.

There is good reason why Petitioner has not indicated that it would seek a stay and has not presented any evidence that a stay may be granted if this proceeding is instituted. The '802 is one of five patents asserted, each involving cellular base stations and/or user equipment that supports 3GPP 5G NR communications. Ex. 2004 [Infringement-Contentions] 1-2. Even if this IPR were instituted, Judge Gilstrap is unlikely to sever and stay the allegations concerning the '802, as he has expressly indicated his view that "it is often most efficient to resolve the diverse allegations together in the same action instead of creating numerous distinct cases for every different accused technology, patent, or party." *Polaris PowerLED Techs., LLC v. Samsung Elecs. Am., Inc.*, No. 2:22-cv-00469-JRG, 2024 WL 1149223, at *2-3, 6 (E.D. Tex. Mar. 15, 2024) (Gilstrap, J.) (denying motion to sever and stay allegations as to patent challenged in instituted IPR even though case at an "early stage"). This is particularly true here, in view of the technical overlap between the five patents. Ex. 2004 [Infringement-

Contentions] 2; *Polaris*, 2024 WL 1149223, at *6 (declining to sever where "the parties would have to engage in duplicative damages and technical discovery for the overlapping accused products" and "the Court and the parties would be burdened with the inefficiencies that result from doubling the necessary claim construction, pre-trial, and trial proceedings.").

Because a stay has not been sought or granted, and Petitioner has not presented any evidence that a stay would be granted if this proceeding is instituted, Factor 1 weighs against institution.

B. *Fintiv* Factor 2: The District Court Trial Will Occur Months Before The Deadline For A Final Written Decision In This Proceeding.

"If the court's trial date is earlier than the projected statutory deadline, the Board generally has weighed this fact in favor of exercising authority to deny institution under *NHK*." *Fintiv I*, 9. Here, Factor 2 weighs against institution as the district court case has a trial date at least four months earlier than the projected statutory deadline for the FWD here.

The deadline for a final written decision in this IPR is September 14, 2025. The trial date is set for May 5, 2025, more than four months before the FWD deadline here. *See* Ex. 2001 [Docket-Control-Order] 1; Pet., 101.

Moreover, the trial date is consistent with the Federal Court Management Statistics for the Eastern District of Texas. *See* Interim Procedure for Discretionary Denials in AIA Post-Grant Proceedings With Parallel District Court

Litigation (the "Interim *Fintiv* Guidance")[3] at 3 & n.4 (encouraging use of these statistics in evaluating this factor). Those statistics indicate that the average time to trial for the Eastern District of Texas for the 12-month period ending December 31, 2023, is listed as 21.4 months, which is even less than the approximately 23-month period from filing to the trial date set by the district court. Ex. 2002 [Trial-Statistics] 1; Ex. 2003 [Docket] 2 (indicating the complaint was filed on June 6, 2023); Ex. 2001 [Docket-Control-Order] 1 (indicating the trial is scheduled for May 5, 2025).

Indeed, the Board has denied institution on account of even smaller gaps between the final written decision and trial. *See, e.g.*, *EClinicalWorks, LLC v. Decapolis LLC*, IPR2022-00229, Paper 10, 9 (Apr. 13, 2022) ("*EclinicalWorks*") (finding this factor weighed in favor of discretionary denial and denying institution where "the beginning of the jury trial in the WDTX Cases is roughly ***one or two months*** before any final decision would have been due had *inter partes* review been instituted") (emphasis added); *Fintiv II*, 13 (finding this factor weighed in favor of discretionary denial and denying institution where the district court trial

[3] The Interim *Fintiv* Guidance is available at https://www.uspto.gov/ sit es/default/files/documents/interim_proc_discretionary_denials_aia__parallel_dist rict_court_litigation_memo_20220621_.pdf.

was scheduled to occur ***two months*** before the deadline for the Board to reach a final written decision); *NXP USA, Inc. v. Impinj, Inc.*, PGR2022-00005, Paper 17, 9 (May 2, 2022) ("*NXP*") (same), *reh'g denied*, Paper 20 (Aug. 25, 2022).

The Petition presents no evidence that the trial will not proceed on the set date, which, as noted above, is consistent with the most current time-to-trial statistics for the Eastern District of Texas. Petitioner cites only a single authority for the proposition that this factor "weighs against institution or is at least neutral." Pet., 102 (citing *SMIC, Americas v. Innovative Foundry Technologies, LLC*, IPR2020-00786, Paper 10, 20-21 (Oct. 5, 2020)). *SMIC*, however, is inapposite and, if anything, supports Patent Owner's position. There, the trial date was only one month before the expected FWD, and the district court judge there had "repeatedly extended trial dates well beyond 12 months after *Markman*" in other cases, and had "by far the busiest patent docket in the country." IPR2020-00786, Paper 10, 20. Even under those circumstances, the Board found factor 2 to be neutral. *Id*., 21. In contrast, here, the trial date is more than four months before the expected FWD in this IPR, there is no evidence of any expectation that the trial date will be continued, and the trial date is in fact already later than the average time to trial for this district. Ex. 2002 [Trial-Statistics] 1; *see also Nine Energy Serv. Inc. v. NCS Multistage Inc.*, IPR2020-01615, Paper 18, 9 (Mar. 24, 2011) ("We generally take courts' trial schedules at face value absent some strong

evidence to the contrary.") (quoting *Fintiv II*, 13).

Factor 2, therefore, weighs against institution.

C. *Fintiv* Factor 3: By The Time An Institution Decision Is Reached, There Will Have Been Extensive Investment In The Parallel District Court Litigation.

Under the third *Fintiv* factor, the Board consider the "investment in the parallel proceeding by the court and the parties." *Fintiv* Order at 6. "This investment factor is related to the trial date factor, in that more work completed by the parties and court in the parallel proceeding tends to support the arguments that the parallel proceeding is more advanced, a stay may be less likely, and instituting would lead to duplicative costs." *Id.*, 10. This factor weighs against institution.

As explained under Factor 1, there is no stay motion pending or expected, and Judge Gilstrap is unlikely to grant a stay motion even if one were to be filed (of which there is no indication), even if this IPR were instituted. Therefore, institution would necessarily lead to duplicative costs and expenditure of resources by the district court and PTAB.

Additionally, there has already been substantial expenditure of resources in the district court, and fact discovery will be entirely completed shortly after the institution deadline of this IPR. The parties have already served both infringement and invalidity contentions. Ex. 2001 [Docket-Control-Order] 4. Fact discovery is already well underway. Petitioners and Patent Owner have already responded to

all propounded interrogatories (24 and 18, respectively). In addition, the parties have already produced over 700,000 pages of documents, not counting any third party productions. Petitioners have also already served seven third-party subpoenas. In fact, the parties are required to have "substantially complete[d]" all document production on October 2, 2024, just a few weeks after the expected date of the institution decision on September 14, 2024. Ex. 2001 [Docket-Control-Order] 4. All fact discovery must also be completed approximately two months after the institution decision deadline. *Id*., 3. Therefore, by the time of the institution decision, substantial work will already have been done in the parallel district court case.

The same is true for expert work and claim construction. By the time of institution, substantial work will have been completed by the experts. Much of the source code that is required to be produced by Samsung in the district court litigation is subject to review by Korean Ministry of Trade, Industry and Energy (MOTIE) for approval of their export to the United States. This months-long process has been completed, and approval was granted. The experts have started reviewing the documents this month, and will have conducted extensive work by the time of institution.

Similarly, claim construction terms will have been identified and proposed claim terms will have been exchanged by the parties before the institution decision

here. Ex. 2001 [Docket-Control-Order] 4. Claim construction briefing will be complete within approximately a month of the institution decision here. *Id*., 3-4.

Nor can Petitioner show diligence in the filing of the Petition. The Petition was filed more than eight months after the filing of the district court complaint. Ex. 2003 [Docket] 2. It was also filed five months after service of the infringement contentions by Patent Owner. Ex. 2004 [Infringement-Contentions] 7 (showing service date of September 28, 2023). Furthermore, every single one of the references relied upon by the Petition is a published U.S. patent or patent application, which suggests the Petition could have been filed earlier with reasonable diligence. *Apple Inc. v. Zomm, LLC,* IPR2019-1030, Paper 8, 12 (Nov. 14, 2019) (finding that a similar *General Plastic* factor weighs against institution and agreeing with Patent Owner that "as Tran is a U.S. Patent and it uses the same terms used in the '895 patent, in the absence of any explanation as to why a reasonably diligent search would not (or did not) uncover the reference, the second *General Plastic* factor weighs towards exercising our discretion to deny institution.").

Thus, substantial resources have already been spent in the parallel district court and that effort will only increase substantially by the institution deadline. Moreover, because no stay is expected, the duplication of efforts and resources at

the district and court and PTAB will only increase if this matter is instituted. Thus, this factor weighs against institution.

D. *Fintiv* Factor 4: There Is Perfect Overlap Between This IPR And The District Court Proceeding.

This factor looks at "whether all or some of the claims challenged in the petition are also at issue in district court" and whether the "petition includes the same or substantially the same claims, grounds, arguments, and evidence" as the parallel district court case. *Fintiv I*, 12-13. Here, Factor 4 weighs heavily against institution as there is substantial overlap of the challenged and asserted claims, and the same art applied in the Petition is also relied upon at the district court. Petitioners, moreover, fail to mitigate this overlap through any stipulation whatsoever.

The Petition challenges all of the claims that are asserted in litigation. *Compare* Pet., 4 (challenging claims 1-4, 6-10, 13-14, 17, 21-25) *with* Ex. 2004 [Infringement-Contentions] 1 (identifying asserted claims 1-4, 6-10, 13-14, 17, 21-24); *see also Vector Flow, Inc. v. HID Global Corp.*, IPR2023-00353, Paper 8, 22 (Jul. 17, 2023) (denying institution in part because the same claims were challenged at the PTAB and asserted in litigation); *EClinicalWorks*, 12 (same). The Petition argues that this factor weighs against institution because "this Petition challenges more claims than are being asserted." Pet., 102.

Of the 17 claims challenged in the IPR, only a single dependent claim is not

asserted in litigation. Ex. 2004 [Infringement-Contentions] 1 (dependent claim 25 is not asserted). However, this marginal difference does not change the balancing of this factor. Claim 25 recites limitations that are similar to those recited in other claims asserted in litigation. *Compare* Cl. 25 *with, e.g.*, Cl. 2. ("wherein frequency difference between the first center frequency and the second center frequency is greater than the sum of one-half the first frequency range and one-half the second frequency range."). *Next Caller, Inc. v. TRUSTID, Inc.*, IPR2019-00961, Paper 10, 14 (Oct. 16, 2019) (denying institution even though district court involves only a subset of claims because the claims all are directed to the same subject matter and petitioner does not argue that the non-overlapping claims differ significantly in some way or argue that it would be harmed if institution of the non-overlapping claims is denied).

Similarly, the Petition involves substantially the same grounds and evidence as the parallel district court. Just like in the IPR, Petitioner in the district court rely on grounds based on primary references Suzuki and Fernandez. *Compare* Pet., 4 (grounds 2-5 based on Suzuki, grounds 6-9 based on Fernandez) *with* Ex. 2005 [Invalidity-Contentions] 39 (alleging that each of Suzuki and Fernandez in combination with various prior art references render the claims obvious). The only primary reference not asserted in the district court litigation is Rick, which the Petition relies upon to allege obviousness of a single claim (claim 1). Pet., 4.

Further, Petitioner fails to offer any stipulation concerning what prior art they will rely upon in the district court litigation. This proceeding could not possibly be an efficient alternative when Petitioners intend to assert the ***exact same art*** in the district court. *See, e.g.*, *Code200, UAB v. Luminati Networks Ltd.*, IPR2020-01506, Paper 10, 11-12 (Feb. 16, 2021) (denying institution, where "the overlap in issues between the two proceedings is substantial" and there were not "any stipulations filed or actions taken by Petitioner to reduce overlap between the proceedings"); *Apcon, Inc. v. Gigamon Inc.*, IPR2020-01579, Paper 9, 26 (Mar. 16, 2021) (denying institution where "the art appears substantially the same, and no stipulation has been filed by Petitioner agreeing not to assert the same art").

In short, the Petition challenges the same claims asserted in the parallel litigation, and uses the same art as relied upon in the district court. Petitioner also fails to offer any stipulation limiting the prior art or invalidity grounds on which they will rely in district court litigation. This raises substantial "concerns of inefficiency and the possibility of conflicting decisions," weighing against institution. *See Fintiv I*, 12.

E. *Fintiv* Factor 5: Petitioners Are The Defendants In The District Court Litigation.

Petitioners are both defendants in the district court litigation. Ex. 2003 [Docket] 2 (Dkt. #1 identifying Samsung Electronics America, Inc. and Samsung Electronics Co. Ltd. as defendants). "Because the petitioner and the defendant in

the parallel proceeding are the same party, this factor weighs in favor of discretionary denial." *Fintiv II*, 15.

F. *Fintiv* Factor 6: Other Circumstances, Including The Merits, Weigh Against Institution.

This factor looks at "other circumstances that impact the Board's exercise of discretion, including the merits." *Fintiv I*, 9. It weighs against institution here.

The Interim *Fintiv* Guidance provides that "compelling, meritorious challenges will be allowed to proceed at the PTAB even where district court litigation is proceeding in parallel." Interim *Fintiv* Guidance, 4. "Compelling, meritorious challenges are those in which the evidence, if unrebutted in trial, would plainly lead to a conclusion that one or more claims are unpatentable by a preponderance of the evidence." *Id*.

As the Director has made clear, "the compelling merits standard is a higher standard" than the reasonable likelihood of prevailing standard required for institution. *CommScope Techs. LLC v. Dali Wireless, Inc.*, IPR2022-01242, Paper 23, 3 (Feb. 27, 2023) (precedential); *see also id*., 5 ("Merely pointing to its analysis under the lower institution standard is insufficient to demonstrate that the Petition presents a compelling unpatentability challenge."). Thus, the Director has held that, instead of the "reasonable likelihood of prevailing" threshold required for institution absent *Fintiv*, a "compelling merits" requires that "it is ***highly likely*** that the petitioner would prevail with respect to at least one challenged claim."

OpenSky Indus., LLC v. VLSI Tech. LLC, IPR2021-01064, Paper 102, 49 (Oct. 4, 2022) (precedential).

Here, Petitioner has failed to show that it is "highly likely" that it would prevail on the merits; to the contrary, even if Petitioner's evidence were unrebutted, it would not "plainly" lead to a conclusion of unpatentability. For example, with respect to claims 1 and 10, Petitioner has not even made a *prima facia* showing to be rebutted that the references perform the claimed method "in a wireless communication channel." *See* Sections II.A, II.B.1, II.C.1, *supra*. As another example, with respect to independent claim 24, Petitioner's own reference clearly states that its filter does not receive the signals output from the up-converters, but instead receives a modified, digitalized signal. *See* Sections II.B.3, II.C.4, *supra*. With respect to claims 10 and 17 under the Suzuki's Figure 6 embodiment, the undisputed evidence shows that the signals relied upon by Petitioner do not contain any information "to be transmitted," but are instead pre-distortion signals that will be cancelled by the amplifier before transmission: they are neither themselves transmitted, nor do they contain data to be transmitted. *See* Section II.B.2. With respect to claims 10 and 17 under the Suzuki's Figure 8 embodiment, Petitioner does not show either first and second up-converted signals that are combined, or two frequency ranges as claimed. *See* Section II.B.3. Finally, with respect to claim 17 under the Fernandez grounds, Petitioner does not

even point to a "baseband digital system." Thus, there is not a *prima facie* case of obviousness alleged to even be rebutted.

For the foregoing reasons, other factors, including lack of "compelling" merits, further support denial of institution.

* * *

Each of the six *Fintiv* factors weigh in favor of the Board exercising its discretion to deny institution.

IV. CONCLUSION

For the foregoing reasons, the Petition should be denied.

Respectfully submitted,

____/ Kenneth J. Weatherwax /_____

Kenneth J. Weatherwax, Reg. No. 54,528
Nathan Lowenstein, *pro hac vice* motion to be filed
Parham Hendifar, Reg. No. 71,470
LOWENSTEIN & WEATHERWAX LLP

Date: June 14, 2024

CERTIFICATE OF COMPLIANCE WITH TYPE-VOLUME LIMITS

This Patent Owner Preliminary Response (the "POPR") consists of 12,018 words, excluding table of contents, table of authorities, certificate of service, this certificate, or table of exhibits. The POR complies with the type-volume limitation of 14,000 words as mandated in 37 C.F.R. § 42.24. In preparing this certificate, counsel has relied on the word count of the word-processing system used to prepare the paper (Microsoft Word).

Respectfully submitted,

/ Parham Hendifar /

Date: June 14, 2024

CERTIFICATE OF SERVICE

The undersigned hereby certifies that the following documents were served by electronic service, by consent between the parties (Pet. at 74), on the date signed below:

PATENT OWNER'S PRELIMINARY RESPONSE

EXHIBITS 2001-2005

The names and address of the parties being served are as follows:

jimglass@quinnemanuel.com (James M. Glass)
quincylu@quinnemanuel.com (Quincy Lu)

Respectfully submitted,

/ Keith Moore /

Date: June 14, 2024