Carrier Aggregation for LTE-Advanced Mobile Communication Systems

Guangxiang Yuan, Beijing University of Posts and Telecommunications and University College London
Xiang Zhang and Wenbo Wang, Beijing University of Posts and Telecommunications
Yang Yang, University College London and Chinese Academy of Sciences

ABSTRACT

In order to achieve up to 1 Gb/s peak data rate in future IMT-Advanced mobile systems, carrier aggregation technology is introduced by the 3GPP to support very-high-data-rate transmissions over wide frequency bandwidths (e.g., up to 100 MHz) in its new LTE-Advanced standards. This article first gives a brief review of continuous and non-continuous CA techniques, followed by two data aggregation schemes in physical and medium access control layers. Some technical challenges for implementing CA technique in LTE-Advanced systems, with the requirements of backward compatibility to LTE systems, are highlighted and discussed. Possible technical solutions for the asymmetric CA problem, control signaling design, handover control, and guard band setting are reviewed. Simulation results show Doppler frequency shift has only limited impact on data transmission performance over wide frequency bands in a high-speed mobile environment when the component carriers are time synchronized. The frequency aliasing will generate much more interference between adjacent component carriers and therefore greatly degrades the bit error rate performance of downlink data transmissions.

INTRODUCTION

In order to meet the strong demand for wireless broadband services from fast-growing mobile users, the International Telecommunication Union (ITU) has initiated the standardization process of the next-generation mobile communication systems, entitled IMT-Advanced or fourth-generation (4G) mobile systems [1]. According to the performance and technical requirements defined in [2], future IMT-Advanced systems can support very high peak data rates for mobile users, up to 1 Gb/s in static and pedestrian environments, and up to 100 Mb/s in high-speed mobile environment.

Two international standardization organizations, the Third Generation Partnership Project (3GPP) and IEEE 802.16 Working Group (WG), are actively developing new mobile communication standards for achieving the ambitious performance goals of IMT-Advanced mobile systems [2]. In particular, 3GPP has completed its Long Term Evolution (LTE) standards family Release 8 (R8), which defines and specifies new functions, characteristics and key technologies for beyond 3G (B3G) mobile systems. The LTE standards will be further improved to become the LTE-Advanced standards, which will be submitted to the ITU as candidate technical standards for IMT-Advanced systems. The IEEE 802.16 WG is developing an extension of its fixed broadband wireless access standard, called 802.16m, to meet the technical and performance requirements of IMT-Advanced.

3GPP LTE-Advanced standards should be backward compatible with the corresponding LTE systems, but more important, they should fully meet, even exceed, the comprehensive requirements of the ITU's IMT-Advanced systems on peak data rates, transmission bandwidth, peak/average spectrum efficiency, delay performance in control and user planes, and mobility. Specifically, Table 1 compares the peak, average, and cell-edge spectrum efficiency requirements of the LTE, LTE-Advanced, and IMT-Advanced systems.

Multi-antenna transmission techniques can effectively improve both downlink and uplink transmission performance. In LTE standards up to four antennas can be deployed on a base station (BS). When the signal-to-interference-plus-noise ratio (SINR) for every path (between one antenna and user equipment [UE]) is sufficiently good, at most four parallel data streams can be multiplexed for simultaneous transmission, thus achieving much higher transmission data rates. To better support multiplexing transmission and expand the coverage of high-data-rate services, coordinated multipoint transmission and reception (CoMP) techniques can be used to improve the SINR at UE. The basic principle of CoMP is to coordinate multiple geographically distributed BSs (antennas) to serve UE more efficiently. Depending on a UE unit's capability of measuring and returning the channel status information between itself and multiple BSs (antennas), three types of coordination schemes have been proposed for high-data-rate downlink transmission. First, the uplink signals from the UE are measured by the BSs in its vicinity and used as references to estimate the downlink channel conditions from multiple antennas to the UE. A central baseband processing unit will then coordinate a group of suitable antennas to work together for the intended UE. In this scheme the UE is only passively involved in the antenna selec-

 0163-6804/10/$25.00 © 2010 IEEE

IPR2024-00608
Petitioners' Ex. 1015
Ex.1015.00001

	IMT-Advanced		LTE		LTE-Advanced	
	Uplink	Downlink	Uplink	Downlink	Uplink	Downlink
Peak spectrum efficiency (bps/Hz)	6.75	15	>2.5	>5	15	30
Average spectrum efficiency (bps/Hz/cell)	1.4	2.2	0.66 ~ 1.0	1.6 ~ 2.1	1.2 ~ 2.0	2.4 ~ 3.7
Cell-edge spectrum efficiency (bps/Hz/cell/user)	0.03	0.06	0.02 ~ 0.03	0.04 ~ 0.06	0.04 ~ 0.07	0.07 ~ 0.12
Operating bandwidth (MHz)	≤40		≤20		≤100	

Table 1. *Comparison of spectrum efficiency requirements.*

tion process, and those antennas selected appear transparent to it. Second, the UE measures and returns the downlink channels' status from all visible BSs (antennas). Based on this feedback information and the UE's uplink reference signals, a central baseband processing unit chooses, coordinates, and configures multiple antennas with suitable transmission parameters to minimize interference and achieve the targeted downlink performance. In this scheme the UE is required to provide downlink channel status information for antenna selection, but it does not know the exact antennas that are selected or their transmission configurations. Third, based on the second scheme, the UE is provided with sufficient information about downlink coordinated multi-antenna transmission, so it can perform effective signal processing of multiple received signals.

In practice, multi-antenna techniques cannot continuously increase transmission performance, because the constraints on terminal size, complexity, and cost limit the number of antennas that can be installed on a UE unit. In order to achieve the performance requirements of IMT-Advanced systems, carrier aggregation (CA) has been recently proposed in [3] to aggregate two or more component carriers for supporting high-data-rate transmission over a wide bandwidth (i.e., up to 100 MHz for a single UE unit), while preserving backward compatibility to legacy systems.

This article aims to review and analyze the key challenges of realizing CA techniques in future LTE-Advanced mobile systems. Two types of CA and data aggregation schemes are introduced in the next section. Then some technical challenges, such as asymmetric CA, control signaling design, handover control, guard band setting, Doppler shift, and interference, are investigated and discussed. The final section concludes this article.

CA Types

As shown in Fig. 1, two types of CA techniques have been proposed for the LTE-Advanced mobile systems:

- Continuous CA when multiple available component carriers are adjacent to each other
- Non-continuous CA when multiple available component carriers are separated along the frequency band

In both cases multiple LTE/component carriers are aggregated to serve a single unit of LTE-Advanced UE. Regarding UE complexity, cost, capability, and power consumption, it is easier to implement continuous CA without making many changes to the physical layer structure of LTE systems. It is possible to use a single fast Fourier transform (FFT) module and a single radio frequency (RF) component to achieve continuous CA for an LTE-Advanced UE unit, while providing backward compatibility to the LTE systems. In addition, compared to non-continuous CA, it is easier to implement resource allocation and management algorithms for continuous CA.

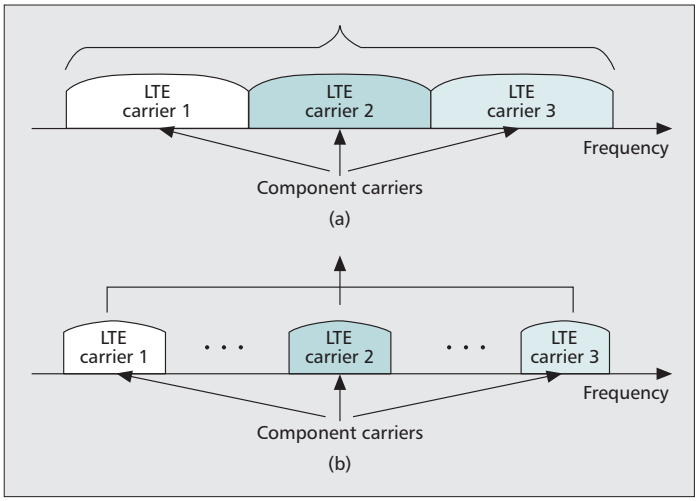

Figure 1. *Carrier aggregation types: a) continuous; b) non-continuous.*

According to the existing spectrum allocation policies and the fact that the spectrum resource in the low frequency band(< 4 GHz) is scarce, it is difficult to allocate continuous 100 MHz bandwidth for a mobile network. Therefore, the non-continuous CA technique provides a practical approach to enable mobile network operators to fully utilize their current spectrum resources, including the unused scattered frequency bands and those already allocated for some legacy systems, such as GSM and 3G systems. In fact, the candidate frequency bands proposed at World Radio Conference 2007(WRC 07) for IMT-Advanced system are non-continuous, and some of them are less than 100 MHz. But obviously, for non-continuous CA, the deployment of multiple RF receiving units and multiple FFTs is unavoidable in LTE-Advanced UE. Since non-continuous CA supports data transmissions over multiple sep-

IPR2024-00608
Petitioners' Ex. 1015
Ex.1015.00002

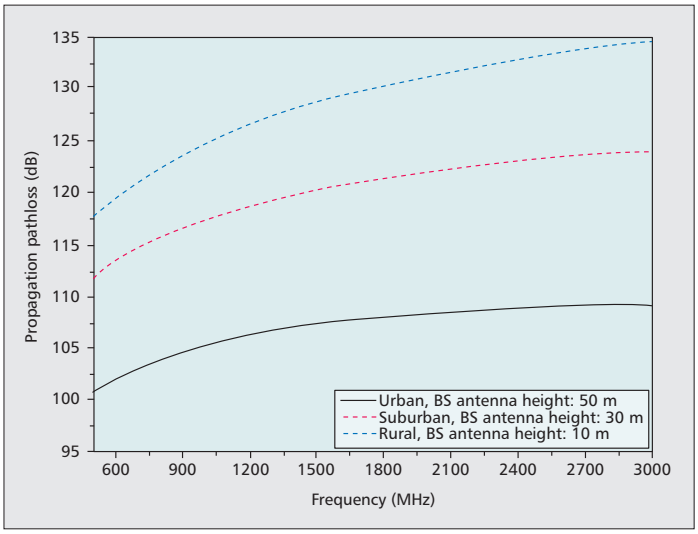

Figure 2. *Propagation path loss in different frequency and communication environments, radio channel model: extended Okumura Hata model, communication distance: 1 km, UE antenna height: 1.5 m.*

arated carriers across a large frequency range, the radio channel characteristics and transmission performance, such as propagation path loss and Doppler shift, vary a lot at different frequency bands, and should be fully evaluated and considered in the design of aggregation algorithms. Figure 2 shows the propagation path loss over the frequency range from 500 to 3000 MHz. In order to support broadband data transmission under the non-continuous CA approach, multidimensional resource allocation and management schemes should be developed and implemented to adaptively adjust transmission power, modulation, and coding schemes for different component carriers. The joint multiple component carrier resource allocation and adaptive adjustment should be implemented in non-continuous CA. For example, for the situation of the enhanced NodeB (eNB) in an LTE-Advanced system with fixed transmitting power on each component carrier, the effective coverage or supportable modulation and coding schemes of each component carrier are different. The available radio resource of a cell in an LTE-Advanced system reveals a hierarchical structure characteristic in terms of each component carrier. Generally speaking, a lower-frequency component carrier can provide larger service coverage, and is more suitable for supporting high order modulation and coding schemes.

Figure 3 shows the relationship between a component carrier's Doppler frequency shift and its frequency under different mobile speeds. So the Doppler frequency shift value for each component carrier, as well as its channel coherent time, should be estimated and compensated for at an IMT-Advanced UE unit.

Data Aggregation Schemes

The transmission blocks (TBs) from different component carriers can be aggregated at either the medium access control (MAC) or physical layer, as shown in Fig. 4 for IMT-Advanced systems. In a MAC layer data aggregation scheme, each component carrier has its own transmission configuration parameters (e.g., transmitting power, modulation and coding schemes, and multiple antenna configuration) in the physical layer, as well as an independent hybrid automatic repeat request (HARQ) entity in the MAC layer. While in a physical layer data aggregation scheme one HARQ entity is used for all the aggregated component carriers, new transmission configuration parameters should be specified for the entire aggregated bandwidth.

Compared to the physical-layer scheme, the transmission parameters are configured independently for each component carrier under the MAC layer data aggregation scheme. So the latter can support more flexible and efficient data transmissions in both uplink and downlink, at the expense of multiple control channels. In this way backward compatibility is guaranteed, since the same physical layer and MAC layer configuration parameters and schemes for the LTE systems can be used in future LTE-Advanced systems.

Technical Challenges

Asymmetric CA

Due to asymmetric data traffic in uplink and downlink channels, asymmetric CAs should be supported in two transmission directions; that is, the numbers of aggregated component carriers in two directions can be different, thus improving spectrum efficiency in LTE-Advanced systems. However, asymmetric CA will cause ambiguity in downlink component carrier selection, because it is difficult for an LTE-Advanced eNB to know the component carrier to which UE anchors in downlink during the random access process. As a result, the eNB cannot transmit the random access response to the UE without identifying the exact component carriers selected by the UE for the downlink.

So far, there are three schemes proposed for solving this problem [4]. The first scheme is to configure a physical random access channel (PRACH) on each component carrier with different parameters. When the UE sends its random access request according to the PRACH configuration parameters of a specific downlink component carrier, eNB can identify this downlink component carrier by checking the UE's RACH preamble via an uplink component carrier. The second scheme is to configure all the downlink component carriers with the same PRACH parameters. An initial random access response with specific transmission configuration parameters and requested information, such as cell-radio network temporary indication and uplink grant resource allocation, will be broadcast to every associated downlink component carrier of the uplink carrier used by the UE for sending its random access request. Upon receiving a further response from the UE, the corresponding eNB can identify the downlink component carrier to which the UE is attached. The third scheme uses only one downlink component carrier to bear the control channels relevant to the random access process (e.g., physical broadcast channel and synchronization channel). As every uplink component carrier links to this common downlink carrier, there is no need for an eNB to detect the downlink compo-

IPR2024-00608
Petitioners' Ex. 1015
Ex.1015.00003

nent carrier to which UE is attached. This scheme is simple, but is not flexible in load balancing or system deployment.

Regarding LTE-Advanced systems working in time-division duplex (TDD) mode, besides the above schemes using different numbers of component carriers in supporting asymmetric traffic loads on uplink and downlink channels, asymmetric CA can also be achieved by adjusting the ratio of allocated time slots for uplink and downlink transmissions. This scheme simplifies the resource allocation relationship between the uplink and downlink channels, and furthermore, makes it possible for TDD systems to utilize the channel reciprocity property to facilitate the use of beamforming and precoding techniques.

Control Signaling Design

The design and deployment of control signaling channels for multiple component carriers are crucial for efficient data transmission control and the overall system performance. In general, there are three different approaches for control channel deployment [5]. First, with a minor modification of the control structure in LTE systems, each component carrier can have its own coded control channel. Second, the control channels of different component carriers can be jointly coded and deployed in a dedicated component carrier. The control information for multiple component carriers will be integrated as the signaling content in this dedicated control channel, thus effectively reducing the signaling overhead in CA, while maintaining backward compatibility with the control channel structure in LTE systems. Third, multiple control channels for different component carriers are jointly coded and then transmitted over the entire frequency band formed by a CA scheme. This approach is not compatible with LTE systems, but offers low signaling overhead and high decoding performance in control channels, at the expense of high power consumption at the UE side.

Handover Control

When a CA technique is used for IMT-Advanced UE, it is very important to support transmission continuity during the handover procedure across multiple cells. Since the channel conditions of two (or more) adjacent cells (eNBs) may be completely different for the specific UE, it is very challenging for the next eNB to guarantee the reservation of sufficient system resources (i.e., component carriers with good transmission quality) for the incoming UE with specific CA configurations and quality of service (QoS) requirements. A simple solution requiring the UE to measure the performance of only one component carrier in each adjacent cell is proposed in [6], which offers similar measurement delay, complexity, and energy consumption as that in LTE systems. The measurement result of one component carrier will be used to estimate the performance of the other component carriers in the corresponding cell. The handover decision and transmission configuration will be determined based on the estimation. Although the overhead and power consumption in handover measurement are saved efficiently, the QoS provision will be influenced due to the inaccura-

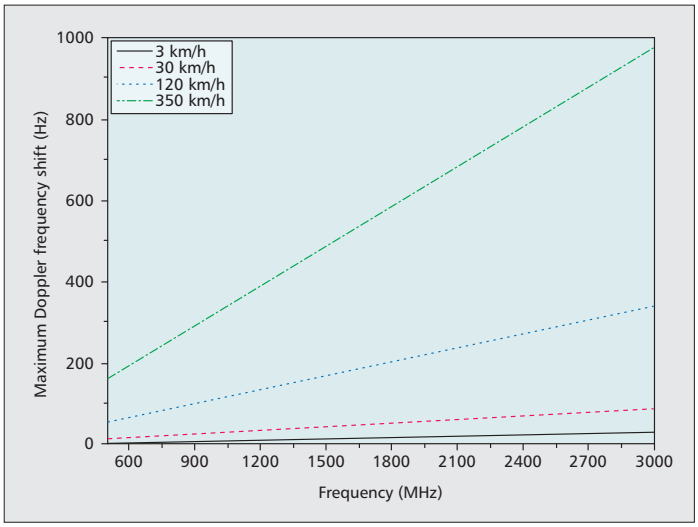

Figure 3. *Maximum Doppler frequency shift at different frequency and mobile speeds.*

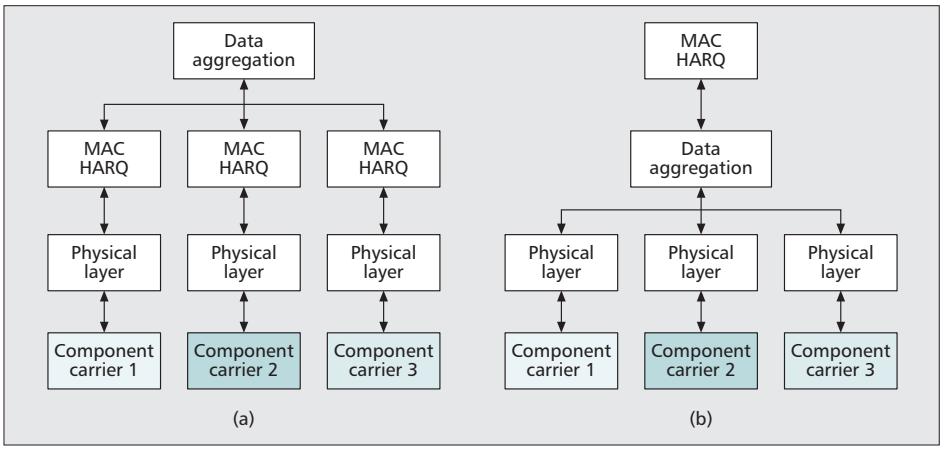

Figure 4. *Data aggregation schemes at different layers: a) MAC layer; b) physical layer.*

IPR2024-00608
Petitioners' Ex. 1015
Ex.1015.00004

cy of estimation based on very limited carrier measurements in this method; especially in non-continuous CA, the UE may make an inappropriate handover decision (i.e., when to switch to which eNB) or execute a suboptimal transmission configuration for the target eNB. At higher complexity, energy consumption, system overhead, and longer delay, multiple component carriers transmitted in multiple adjacent cells can be measured by the UE in the handover procedure. The trade-off between these performance metrics and service continuity and quality in handover still needs an in-depth investigation.

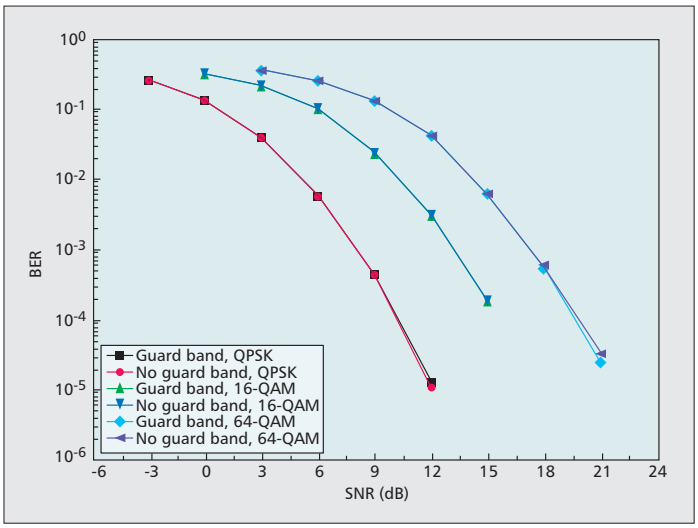

Figure 5. *BER performance with and without Doppler frequency shift.*

Parameters	Value
Carrier frequency	2.0 GHZ
Bandwidth of component carrier	2 MHz
Subframe length	0.99987 ms
Number of OFDM symbols in a subframe	14
FFT size	2048
CP length	73
Number of occupied RB	100
Subcarrier bandwidth	15 kHz
Channel model	Vehicular A (120 km/h)
Doppler frequency shift	223 Hz
Channel coding	Turbo
Coding rate	1/3
Antenna configuration	1 × 1
Detection scheme	MMSE
Control channel/pilot pattern	As defined in [8]

Table 2. *Key simulation parameters.*

Guard Band Setting

For non-continuous CA, component carriers are usually separated by sufficient bandwidth, so the interference between them is negligible. But there are still frequency bands of other systems adjacent to each component carrier of LTE Advanced systems. In the high-speed mobile environment, large Doppler frequency shift will affect the orthogonality between adjacent frequency bands and cause interference between them. Therefore, for both continuous and non-continuous CA, the guard band setting for a component carrier should be carefully set to suppress this self-interference or intersystem interference, while maintaining high spectrum efficiency in data transmission. According to the LTE technical specification [7], 10 percent of the total system bandwidth should be allocated to set the guard bands between adjacent component carriers. With this assumption for continuous CA with three adjacent component carriers, we evaluate via extensive computer simulations the impact of Doppler frequency shift on bit error rate (BER) performance under different modulation schemes for downlink data transmission scenarios with and without guard band. Due to the existence of component carriers with diverse bandwidth, the bandwidth of the component carrier for interference evaluation is set to be 2 MHz. Other key simulation parameters and their values are given in Table 2. As seen in Fig. 5, when only the Doppler frequency shift is considered in a high-speed mobile environment, guard band setting does not have an obvious impact on the BER performance under different modulation schemes. It is because the Doppler frequency shift is so small for the scenario in which the component carrier is in 2 GHz and UE speed is 120 km/h when compared to the bandwidth of the component carrier.

In real communication systems, besides the Doppler frequency shift, due to nonlinear frequency response of a power amplifier and/or the asymmetric characteristic of a crystal oscillator, the effect of frequency aliasing (FA) will occur between adjacent component carriers. With the same simulation parameters as in Table 2, Fig. 6 shows the impact of FA on BER performance under different modulation schemes. For the case without guard bands, the data transmission over an intended component carrier will take over not only its 5 percent bandwidth on both sides (which is specified for guard bands [7]), but also 5 percent bandwidth from its two adjacent component carriers. So the FA ratio for both sides of the intended component carrier is 10 percent of its bandwidth, assuming all component carriers have the same bandwidth. It is seen that FA greatly degrades the BER performance, especially when a high-order modulation scheme is used. For example, compared to the ideal case (without FA), the BER performance curves with FA are about 2.4 dB and 4.2 dB worse for QPSK and 16-QAM, respectively, at the value of BER

IPR2024-00608
Petitioners' Ex. 1015
Ex.1015.00005

equals 10^{-3}. Finally, in order to provide backward compatibility with LTE systems, the central frequencies of component carriers in LTE-Advanced systems should be set with their differences equal to multiples of 100 kHz, which is the channel raster defined by 3GPP [9].

Conclusions

This article gives an overview of CA technology for supporting very-high-data-rate communications in future IMT-Advanced mobile systems. Continuous and non-continuous CAs, and two data aggregation schemes are reviewed and compared. Some technical challenges on asymmetric CA, control signaling design, handover control, and guard band setting, as well as possible solutions, for implementing CA technologies in real mobile systems are discussed. Future research topics include interference management for higher frequency bands (e.g., above 3 GHz) and coordinated multipoint CA for resource allocation across multiple cells.

Acknowledgments

This work is partially supported by the China Scholarship Council (CSC) under the postgraduate student exchange program, the Ministry of Science and Technology (MOST) of China under grants 2009DFB13080 and 2008BAH30B12, and the Research Councils U.K. (RCUK) under the UK-China Science Bridges Project: R&D on (B)4G Wireless Mobile Communications (EP/G042713/1).

References

[1] ITU-R Rec. M.1645, "Framework and Overall Objectives of the Further Development of IMT-2000 and Systems Beyond IMT-2000," 2003.

[2] ITU-R Rec. M.2134, "Requirements Related to Technical Performance for IMT-Advanced Radio Interface(s)," 2008.

[3] 3GPP TR 36.814 v. 1.2.1, "Further Advancements for E-UTRA: Physical Layer Aspects," Tech. Spec. Group Radio Access Network, Rel. 9, June 2009.

[4] 3GPP R1-091837, "Further Views on Initial Access with Asymmetric Carrier Aggregation," Texas Instruments, San Francisco, CA, May 2009.

[5] 3GPP R1-084424, "Control Channel Design Issues for Carrier Aggregation in LTE-A," Motorola, Prague, Czech Republic, Nov. 2008.

[6] 3GPP R2-093104, "Carrier Aggregation Active Mode," Huawei, San Francisco, CA, May 2009.

[7] 3GPP TS 36.104 v. 9.1.0, "Base Station (BS) Radio Transmission and Reception," Tech. Spec. Group Radio Access Network, Rel. 9, Sept. 2009.

[8] R. Love *et al.*, "Downlink Control Channel Design for 3GPP LTE," *Proc. IEEE WCNC '08*, Apr. 2008, pp. 813–18.

[9] 3GPP TS 36.101 v. 9.1.0, "User Equipment (UE) Radio Transmission and Reception," Tech. Spec. Group Radio Access Network, Rel. 9, Sept. 2009.

Biographies

GUANGXIANG YUAN received his B.S. degree from the Department of Electronics and Information, Huazhong University of Science and Technology, Wuhan, China, in 2004. Since 2005 he has been studying in the Wireless Signal Processing and Networks Laboratory of the School of Telecommunications Engineering, Beijing University of Posts and Telecommunications (BUPT), China, as a Ph.D. candidate. From 2008 to 2009, he was a visiting Ph.D. student in the Department of Electronic and Electrical Engineering at University College London (UCL), United Kingdom, and an intern at the Research Institute of British Telecommunication (Adastral Park, Ipswich, United Kingdom) for three months during the period of researching at UCL. His current research interests include key technologies in B3G mobile communication systems, cooperative communication, and intelligent processing in wireless networks.

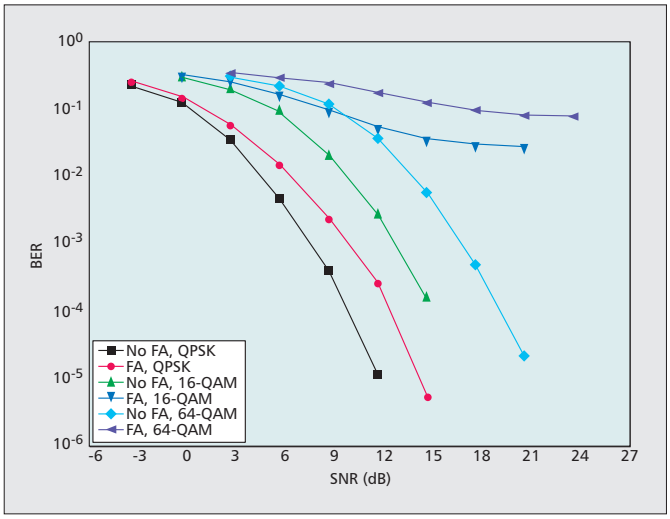

Figure 6. *BER performance with and without frequency aliasing effect.*

XIANG ZHANG [S'03] received his B.S. degree from the School of Information and Communication Engineering, BUPT, in 2007. He is currently pursuing his Ph.D. degree with a top grade scholarship in the Wireless Signal Processing and Networks Laboratory of BUPT. His research interests span the physical layer key technologies of HSPA+ and LTE+ systems, with emphasis on MIMO joint detection, carrier aggregation, and network coding in wireless networks.

YANG YANG (y.yang@ee.ucl.ac.uk) received his B.Eng. and M.Eng. degrees in radio engineering from Southeast University, China, in 1996 and 1999, respectively; and his Ph.D. degree in information engineering from the Chinese University of Hong Kong in 2002. He is currently a senior lecturer with the Department of Electronic and Electrical Engineering at University College London (UCL) and assistant director of the Shanghai Research Center for Wireless Communications (WiCO), Chinese Academy of Sciences. Prior to that, he served the Department of Information Engineering at the Chinese University of Hong Kong as an assistant professor (August 2002–August 2003), and then the Department of Electronic and Computer Engineering at Brunel University, United Kingdom, as a Lecturer (September 2003–February 2005). He has published over 70 refereed journal and conference papers, covering a wide range of research areas such as next-generation mobile communications, wireless ad hoc, sensor and mesh networks, cross-layer algorithm design and performance evaluation, cooperative communications, cognitive radio, dynamic radio resource management, and medium access control protocols.

WENBO WANG received his B.S. degree in communication engineering from BUPT in 1986. He received his M.S. and Ph.D. degrees in signal and information processing at BUPT in 1989 and 1992, respectively. From October 1992 to 1993 he was a researcher at ICON Vommunication Inc., Dallas, Texas He has been a chaired professor in the School of Information and Communications Engineering at BUPT since 2000, and now is the executive dean of the Graduate School in BUPT. He is assistant director of the Universal Wireless Communication Laboratory. He has been the director of the Beijing Institute of Communication since 2002 and an assistant director of the National Defense Communication Committee of the China Institute of Communication. He has served as consultant for TD-SCDMA research and industrialization programs. He has published more than 200 papers and six books, and holds 12 patents. His research interests include transmission technology, 3G/B3G broadband wireless access, wireless network theory, digital signal processing, OFDM/CDMA, MIMO, cooperative and cognitive communications, and software radio technology.

IPR2024-00608
Petitioners' Ex. 1015
Ex.1015.00006