3GPP TS 36.321 V14.0.0 (2016-09)

Technical Specification

3rd Generation Partnership Project; Technical Specification Group Radio Access Network; Evolved Universal Terrestrial Radio Access (E-UTRA); Medium Access Control (MAC) protocol specification (Release 14)

The present document has been developed within the 3rd Generation Partnership Project (3GPP TM) and may be further elaborated for the purposes of 3GPP.
The present document has not been subject to any approval process by the 3GPP Organizational Partners and shall not be implemented.
This Specification is provided for future development work within 3GPP only. The Organizational Partners accept no liability for any use of this Specification.
Specifications and reports for implementation of the 3GPP TM system should be obtained via the 3GPP Organizational Partners' Publications Offices.

ASUS EX2033
Samsung v. ASUS
IPR2024-00614

Keywords
UMTS, radio

3GPP

Postal address

3GPP support office address
650 Route des Lucioles - Sophia Antipolis
Valbonne - FRANCE
Tel.: +33 4 92 94 42 00 Fax: +33 4 93 65 47 16

Internet
http://www.3gpp.org

Copyright Notification

No part may be reproduced except as authorized by written permission.
The copyright and the foregoing restriction extend to reproduction in all media.

© 2016, 3GPP Organizational Partners (ARIB, ATIS, CCSA, ETSI, TSDSI, TTA, TTC).
All rights reserved.

UMTS™ is a Trade Mark of ETSI registered for the benefit of its members
3GPP™ is a Trade Mark of ETSI registered for the benefit of its Members and of the 3GPP Organizational Partners
LTE™ is a Trade Mark of ETSI currently being registered for the benefit of its Members and of the 3GPP Organizational Partners
GSM® and the GSM logo are registered and owned by the GSM Association

ASUS EX2033
Samsung v. ASUS
IPR2024-00614

Contents

Foreword 6
1 Scope 7
2 References 7
3 Definitions and abbreviations 8
3.1 Definitions 8
3.2 Abbreviations 10
4 General 11
4.1 Introduction 11
4.2 MAC architecture 11
4.2.1 MAC Entities 11
4.3 Services 14
4.3.1 Services provided to upper layers 14
4.3.2 Services expected from physical layer 14
4.4 Functions 14
4.5 Channel structure 15
4.5.1 Transport Channels 15
4.5.2 Logical Channels 15
4.5.3 Mapping of Transport Channels to Logical Channels 16
4.5.3.1 Uplink mapping 16
4.5.3.2 Downlink mapping 16
4.5.3.3 Sidelink mapping 17
5 MAC procedures 18
5.1 Random Access procedure 18
5.1.1 Random Access Procedure initialization 18
5.1.2 Random Access Resource selection 20
5.1.3 Random Access Preamble transmission 22
5.1.4 Random Access Response reception 22
5.1.5 Contention Resolution 25
5.1.6 Completion of the Random Access procedure 26
5.2 Maintenance of Uplink Time Alignment 26
5.3 DL-SCH data transfer 28
5.3.1 DL Assignment reception 28
5.3.2 HARQ operation 30
5.3.2.1 HARQ Entity 30
5.3.2.2 HARQ process 30
5.3.3 Disassembly and demultiplexing 31
5.4 UL-SCH data transfer 32
5.4.1 UL Grant reception 32
5.4.2 HARQ operation 33
5.4.2.1 HARQ entity 33
5.4.2.2 HARQ process 35
5.4.3 Multiplexing and assembly 37
5.4.3.1 Logical channel prioritization 37
5.4.3.2 Multiplexing of MAC Control Elements and MAC SDUs 38
5.4.4 Scheduling Request 38
5.4.5 Buffer Status Reporting 39
5.4.5a Data Volume and Power Headroom Reporting 40
5.4.6 Power Headroom Reporting 41
5.5 PCH reception 43
5.6 BCH reception 43
5.7 Discontinuous Reception (DRX) 43
5.7a Discontinuous Reception (DRX) for SC-PTM 46
5.8 MAC reconfiguration 46
5.9 MAC Reset 46

ASUS EX2033
Samsung v. ASUS
IPR2024-00614

5.10 Semi-Persistent Scheduling ... 47
5.10.1 Downlink ... 47
5.10.2 Uplink ... 47
5.11 Handling of unknown, unforeseen and erroneous protocol data ... 48
5.12 MCH reception ... 48
5.13 Activation/Deactivation of SCells ... 49
5.14 SL-SCH Data transfer ... 50
5.14.1 SL-SCH Data transmission ... 50
5.14.1.1 SL Grant reception and SCI transmission ... 50
5.14.1.2 Sidelink HARQ operation ... 53
5.14.1.2.1 Sidelink HARQ Entity ... 53
5.14.1.2.2 Sidelink process ... 54
5.14.1.3 Multiplexing and assembly ... 55
5.14.1.3.1 Logical channel prioritization ... 55
5.14.1.3.2 Multiplexing of MAC SDUs ... 56
5.14.1.4 Buffer Status Reporting ... 56
5.14.2 SL-SCH Data reception ... 57
5.14.2.1 SCI reception ... 57
5.14.2.2 Sidelink HARQ operation ... 58
5.14.2.2.1 Sidelink HARQ Entity ... 58
5.14.2.2.2 Sidelink process ... 58
5.14.2.3 Disassembly and demultiplexing ... 59
5.15 SL-DCH data transfer ... 59
5.15.1 SL-DCH data transmission ... 59
5.15.1.1 Resource allocation ... 59
5.15.1.2 Sidelink HARQ operation ... 60
5.15.1.2.1 Sidelink HARQ Entity ... 60
5.15.1.2.2 Sidelink process ... 60
5.15.2 SL-DCH data reception ... 61
5.15.2.1 Sidelink HARQ operation ... 61
5.15.2.1.1 Sidelink HARQ Entity ... 61
5.15.2.1.2 Sidelink process ... 61
5.16 SL-BCH data transfer ... 62
5.16.1 SL-BCH data transmission ... 62
5.16.2 SL-BCH data reception ... 62

6 Protocol Data Units, formats and parameters ... 62
6.1 Protocol Data Units ... 62
6.1.1 General ... 62
6.1.2 MAC PDU (DL-SCH and UL-SCH except transparent MAC and Random Access Response, MCH) ... 63
6.1.3 MAC Control Elements ... 64
6.1.3.1 Buffer Status Report MAC Control Elements ... 64
6.1.3.1a Sidelink BSR MAC Control Elements ... 66
6.1.3.2 C-RNTI MAC Control Element ... 67
6.1.3.3 DRX Command MAC Control Element ... 67
6.1.3.4 UE Contention Resolution Identity MAC Control Element ... 68
6.1.3.5 Timing Advance Command MAC Control Element ... 68
6.1.3.6 Power Headroom Report MAC Control Element ... 68
6.1.3.6a Extended Power Headroom Report MAC Control Elements ... 69
6.1.3.6b Dual Connectivity Power Headroom Report MAC Control Element ... 72
6.1.3.7 MCH Scheduling Information MAC Control Element ... 73
6.1.3.7a Extended MCH Scheduling Information MAC Control Element ... 74
6.1.3.8 Activation/Deactivation MAC Control Elements ... 75
6.1.3.9 Long DRX Command MAC Control Element ... 75
6.1.3.10 Data Volume and Power Headroom Report MAC Control Element ... 76
6.1.3.11 SPS confirmation MAC Control Element ... 76
6.1.4 MAC PDU (transparent MAC) ... 77
6.1.5 MAC PDU (Random Access Response) ... 77
6.1.6 MAC PDU (SL-SCH) ... 78
6.2 Formats and parameters ... 80
6.2.1 MAC header for DL-SCH, UL-SCH and MCH ... 80
6.2.2 MAC header for Random Access Response ... 82

ASUS EX2033
Samsung v. ASUS
IPR2024-00614

6.2.3 MAC payload for Random Access Response 82
6.2.4 MAC header for SL-SCH 82

7 Variables and constants 83
7.1 RNTI values 83
7.2 Backoff Parameter values 84
7.3 PRACH Mask Index values 86
7.4 Subframe_Offset values 86
7.5 TTI_BUNDLE_SIZE value 86
7.6 DELTA_PREAMBLE values 86
7.7 HARQ RTT Timers 87
7.8 DL_REPETITION_NUMBER value 87
7.9 UL_REPETITION_NUMBER value 87

Annex A (normative): Handling of measurement gaps 88

Annex B (normative): Contention resolution for RACH access 89

Annex C (informative): Intended UE behaviour for DRX Timers 90

Annex D (informative): Change history 91

ASUS EX2033
Samsung v. ASUS
IPR2024-00614

Foreword

This Technical Specification has been produced by the 3rd Generation Partnership Project (3GPP).

The contents of the present document are subject to continuing work within the TSG and may change following formal TSG approval. Should the TSG modify the contents of the present document, it will be re-released by the TSG with an identifying change of release date and an increase in version number as follows:

Version x.y.z

where:

- x the first digit:
  - 1 presented to TSG for information;
  - 2 presented to TSG for approval;
  - 3 or greater indicates TSG approved document under change control.
- y the second digit is incremented for all changes of substance, i.e. technical enhancements, corrections, updates, etc.
- z the third digit is incremented when editorial only changes have been incorporated in the document.

ASUS EX2033
Samsung v. ASUS
IPR2024-00614

1 Scope

The present document specifies the E-UTRA MAC protocol.

2 References

The following documents contain provisions which, through reference in this text, constitute provisions of the present document.

- References are either specific (identified by date of publication, edition number, version number, etc.) or non-specific.
- For a specific reference, subsequent revisions do not apply.
- For a non-specific reference, the latest version applies. In the case of a reference to a 3GPP document (including a GSM document), a non-specific reference implicitly refers to the latest version of that document *in the same Release as the present document*.

[1] 3GPP TR 21.905: "Vocabulary for 3GPP Specifications".

[2] 3GPP TS 36.213: "Evolved Universal Terrestrial Radio Access (E-UTRA); Physical Layer Procedures".

[3] 3GPP TS 36.322: “Evolved Universal Terrestrial Radio Access (E-UTRA); Radio Link Control (RLC) protocol specification”.

[4] 3GPP TS 36.323: “Evolved Universal Terrestrial Radio Access (E-UTRA); Packet Data Convergence Protocol (PDCP) Specification”.

[5] 3GPP TS 36.212: “Evolved Universal Terrestrial Radio Access (E-UTRA); Multiplexing and channel coding”.

[6] 3GPP TS 36.214: “Evolved Universal Terrestrial Radio Access (E-UTRA); Physical layer; Measurements”.

[7] 3GPP TS 36.211: “Evolved Universal Terrestrial Radio Access (E-UTRA); Physical Channels and Modulation”.

[8] 3GPP TS 36.331: “Evolved Universal Terrestrial Radio Access (E-UTRA); Radio Resource Control (RRC); Protocol specification”.

[9] 3GPP TS 36.133: "Evolved Universal Terrestrial Radio Access (E-UTRA); Requirements for support of radio resource management".

[10] 3GPP TS 36.101: "Evolved Universal Terrestrial Radio Access (E-UTRA); User Equipment (UE) radio transmission and reception".

[11] 3GPP TS 36.216: "Evolved Universal Terrestrial Radio Access (E-UTRA); Physical layer for relaying operation".

[12] 3GPP TS 36.306: "Evolved Universal Terrestrial Radio Access (E-UTRA); User Equipment (UE) radio access capabilities".

[13] 3GPP TS 23.303: "Proximity-based services (ProSe); Stage 2".

[14] 3GPP TS 23.285: "Architecture enhancements for V2X services".

ASUS EX2033
Samsung v. ASUS
IPR2024-00614

3 Definitions and abbreviations

3.1 Definitions

For the purposes of the present document, the terms and definitions given in TR 21.905 [1] and the following apply. A term defined in the present document takes precedence over the definition of the same term, if any, in TR 21.905 [1].

Active Time: Time related to DRX operation, as defined in subclause 5.7, during which the MAC entity monitors the PDCCH.

mac-ContentionResolutionTimer: Specifies the number of consecutive subframe(s) during which the MAC entity shall monitor the PDCCH after Msg3 is transmitted.

DRX Cycle: Specifies the periodic repetition of the On Duration followed by a possible period of inactivity (see figure 3.1-1 below).

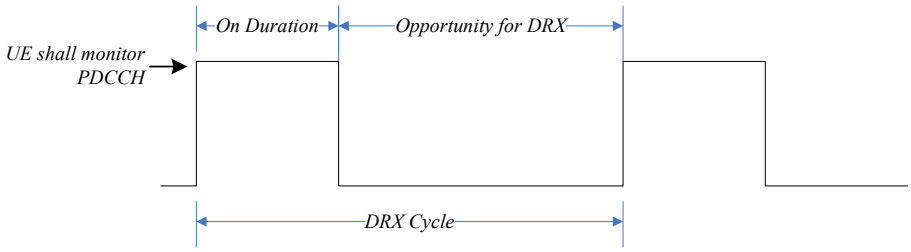

Figure 3.1-1: DRX Cycle

drx-InactivityTimer: Except for NB-IoT, it specifies the number of consecutive PDCCH-subframe(s) after the subframe in which a PDCCH indicates an initial UL, DL or SL user data transmission for this MAC entity. For NB-IoT, it specifies the number of consecutive PDCCH-subframe(s) after the subframe in which the HARQ RTT timer or UL HARQ RTT timer expires.

drx-RetransmissionTimer: Specifies the maximum number of consecutive PDCCH-subframe(s) until a DL retransmission is received.

drxShortCycleTimer: Specifies the number of consecutive subframe(s) the MAC entity shall follow the Short DRX cycle.

drxStartOffset: Specifies the subframe where the DRX Cycle starts.

drx-ULRetransmissionTimer: Specifies the maximum number of consecutive PDCCH-subframe(s) until a grant for UL retransmission is received.

HARQ information: HARQ information for DL-SCH or for UL-SCH transmissions consists of New Data Indicator (NDI), Transport Block (TB) size. For DL-SCH transmissions and for asynchronous UL HARQ, the HARQ information also includes HARQ process ID, except for UEs in NB-IoT for which this information is not present. For UL-SCH transmission the HARQ information also includes Redundancy Version (RV). In case of spatial multiplexing on DL-SCH the HARQ information comprises a set of NDI and TB size for each transport block. HARQ information for SL-SCH and SL-DCH transmissions consists of TB size only.

HARQ RTT Timer: This parameter specifies the minimum amount of subframe(s) before a DL HARQ retransmission is expected by the MAC entity.

Msg3: Message transmitted on UL-SCH containing a C-RNTI MAC CE or CCCH SDU, submitted from upper layer and associated with the UE Contention Resolution Identity, as part of a random access procedure.

NB-IoT: NB-IoT allows access to network services via E-UTRA with a channel bandwidth limited to 180 kHz.

NB-IoT UE: A UE that uses NB-IoT.

onDurationTimer: Specifies the number of consecutive PDCCH-subframe(s) at the beginning of a DRX Cycle.

ASUS EX2033
Samsung v. ASUS
IPR2024-00614

PDCCH: Refers to the PDCCH [7], EPDCCH (in subframes when configured), MPDCCH [2], for an RN with R-PDCCH configured and not suspended, to the R-PDCCH or, for NB-IoT to the NPDCCH.

PDCCH period (pp): Refers to the interval between the start of two consecutive PDCCH occasions and depends on the currently used PDCCH search space [2]. A PDCCH occasion is the start of a search space and is defined by subframe k0 as specified in section 16.6 of [2]. For an NB-IoT UE, if a timer duration is configured by upper layers in units of a PDCCH period, the calculation of number of PDCCH-subframes for the timer is done by multiplying the number of PDCCH periods with *npdcch-NumRepetitions-RA* when the UE uses the common search space or by *npdcch-NumRepetitions* when the UE uses the UE specific search space.

PDCCH-subframe: Refers to a subframe with PDCCH. For a MAC entity not configured with any TDD serving cell(s), this represents any subframe; for a MAC entity configured with at least one TDD serving cell, if a MAC entity is capable of simultaneous reception and transmission in the aggregated cells, this represents the union over all serving cells of downlink subframes and subframes including DwPTS of the TDD UL/DL configuration indicated by *tdd-Config* [8], except serving cells that are configured with *schedulingCellId* [8]; otherwise, this represents the subframes where the SpCell is configured with a downlink subframe or a subframe including DwPTS of the TDD UL/DL configuration indicated by *tdd-Config* [8].
For RNs with an RN subframe configuration configured and not suspended, in its communication with the E-UTRAN, this represents all downlink subframes configured for RN communication with the E-UTRAN.
For SC-PTM reception on a FDD cell, this represents any subframe of the cell except MBSFN subframes; for SC-PTM reception on a TDD cell, this represents the downlink subframes and subframes including DwPTS of the TDD UL/DL configuration indicated by *tdd-Config* [8] of the cell except MBSFN subframes.

NOTE: In the definition of PDCCH-subframe, for serving cell operating according to Frame Structure Type 3 all subframes are considered as downlink subframes.

PDSCH: Refers to PDSCH or for NB-IoT to NPDSCH.

PRACH: Refers to PRACH or for NB-IoT to NPRACH.

PRACH Resource Index: The index of a PRACH within a system frame [7]

Primary Timing Advance Group: Timing Advance Group containing the SpCell.

PUCCH SCell: An SCell configured with PUCCH.

PUSCH: Refers to PUSCH or for NB-IoT to NPUSCH.

***ra-PRACH-MaskIndex*:** Defines in which PRACHs within a system frame the MAC entity can transmit a Random Access Preamble (see subclause 7.3).

RA-RNTI: The Random Access RNTI is used on the PDCCH when Random Access Response messages are transmitted. It unambiguously identifies which time-frequency resource was utilized by the MAC entity to transmit the Random Access preamble.

SC Period: Sidelink Control period, the time period consisting of transmission of SCI and its corresponding data.

SCI: The Sidelink Control Information contains the sidelink scheduling information such as resource block assignment, modulation and coding scheme, Group Destination ID (for sidelink communication) and PPPP (for V2X sidelink communication) [5].

Secondary Timing Advance Group: Timing Advance Group not containing the SpCell. A Secondary Timing Advance Group contains at least one Serving Cell with an UL configured.

Serving Cell: A Primary or a Secondary Cell [8].

Sidelink: UE to UE interface for sidelink communication, sidelink discovery and V2X sidelink communication. The sidelink corresponds to the PC5 interface as defined in [13] for sidelink communication and sidelink discovery, and as defined in [14] for V2X sidelink communication.

Sidelink communication: AS functionality enabling ProSe Direct Communication as defined in TS 23.303 [13], between two or more nearby UEs, using E-UTRA technology but not traversing any network node.

Sidelink Discovery Gap for Reception: Time period during which the UE does not receive any channels in DL from any serving cell, except during random access procedure.

ASUS EX2033
Samsung v. ASUS
IPR2024-00614

Sidelink Discovery Gap for Transmission: Time period during which the UE prioritizes transmission of sidelink discovery and associated procedures e.g. re-tuning and synchronisation over transmission of channels in UL, if they occur in the same subframe, except during random access procedure.

Special Cell: For Dual Connectivity operation the term Special Cell refers to the PCell of the MCG or the PSCell of the SCG, otherwise the term Special Cell refers to the PCell.

Timing Advance Group: A group of Serving Cells that is configured by RRC and that, for the cells with an UL configured, using the same timing reference cell and the same Timing Advance value.

UL HARQ RTT Timer: This parameter specifies the minimum amount of subframe(s) before a UL HARQ retransmission grant is expected by the MAC entity.

V2X sidelink communication: AS functionality enabling V2X Communication as defined in TS 23.285 [14], between nearby UEs, using E-UTRA technology but not traversing any network node.

NOTE: A timer is running once it is started, until it is stopped or until it expires; otherwise it is not running. A timer can be started if it is not running or restarted if it is running. A Timer is always started or restarted from its initial value.

3.2 Abbreviations

For the purposes of the present document, the abbreviations given in TR 21.905 [1] and the following apply. An abbreviation defined in the present document takes precedence over the definition of the same abbreviation, if any, in TR 21.905 [1].

BL	Bandwidth reduced Low complexity
BSR	Buffer Status Report
C-RNTI	Cell RNTI
CC-RNTI	Common Control RNTI
CQI	Channel Quality Indicator
CRI	CSI-RS Resource Indicator
CSI	Channel State Information
eIMTA	Enhanced Interference Management and Traffic Adaptation
eIMTA-RNTI	Enhanced Interference Management and Traffic Adaptation - RNTI
E-UTRA	Evolved UMTS Terrestrial Radio Access
E-UTRAN	Evolved UMTS Terrestrial Radio Access Network
G-RNTI	Group RNTI
MAC	Medium Access Control
MCG	Master Cell Group
M-RNTI	MBMS RNTI
MPDCCH	MTC Physical Downlink Control Channel
LCG	Logical Channel Group
NB-IoT	Narrow Band Internet of Things
NPDCCH	Narrowband Physical Downlink Control Channel
NPDSCH	Narrowband Physical Downlink Shared channel
NPRACH	Narrowband Physical Random Access Control Channel
NPUSCH	Narrowband Physical Uplink Shared channel
PCell	Primary Cell
PSCell	Primary Secondary Cell
PHR	Power Headroom Report
PMI	Precoding Matrix Index
PPPP	ProSe Per-Packet Priority
P-RNTI	Paging RNTI
ProSe	Proximity-based Services
pTAG	Primary Timing Advance Group
PTI	Precoding Type Indicator
RA-RNTI	Random Access RNTI
RI	Rank Indicator
RN	Relay Node
RNTI	Radio Network Temporary Identifier
SCell	Secondary Cell

ASUS EX2033
Samsung v. ASUS
IPR2024-00614

SC-FDM	Single-Carrier Frequency Division Multiplexing
SCG	Secondary Cell Group
SCI	Sidelink Control Information
SC-N-RNTI	Single Cell Notification RNTI
SC-PTM	Single Cell Point to Multipoint
SC-RNTI	Single Cell RNTI
SI-RNTI	System Information RNTI
SL	Sidelink
SL-RNTI	Sidelink RNTI
SL-D-RNTI	Sidelink Dynamic RNTI
SR	Scheduling Request
SRS	Sounding Reference Symbols
SpCell	Special Cell
sTAG	Secondary Timing Advance Group
TAG	Timing Advance Group
TB	Transport Block
TPC-PUCCH-RNTI	Transmit Power Control-Physical Uplink Control Channel-RNTI
TPC-PUSCH-RNTI	Transmit Power Control-Physical Uplink Shared Channel-RNTI
V2X	Vehicle-to-Everything

4 General

4.1 Introduction

The objective is to describe the MAC architecture and the MAC entity from a functional point of view. Functionality specified for the UE equally applies to the RN for functionality necessary for the RN. There is also functionality which is only applicable to the RN, in which case the specification denotes the RN instead of the UE. RN-specific behaviour is not applicable to the UE. For TDD operation, UE behaviour follows the TDD UL/DL configuration indicated by *tdd-Config* unless specified otherwise.

4.2 MAC architecture

The description in this sub clause is a model and does not specify or restrict implementations.

RRC is in control of configuration of MAC.

4.2.1 MAC Entities

E-UTRA defines two MAC entities; one in the UE and one in the E-UTRAN. These MAC entities handle the following transport channels:

- Broadcast Channel (BCH);
- Downlink Shared Channel(s) (DL-SCH);
- Paging Channel (PCH);
- Uplink Shared Channel(s) (UL-SCH);
- Random Access Channel(s) (RACH);
- Multicast Channel(s) (MCH);
- Sidelink Broadcast Channel (SL-BCH);
- Sidelink Discovery Channel (SL-DCH);
- Sidelink Shared Channel (SL-SCH).

ASUS EX2033
Samsung v. ASUS
IPR2024-00614

The exact functions performed by the MAC entities are different in the UE from those performed in the E-UTRAN.

The RN includes both types of MAC entities; one type for communication with UEs and one type for communication with the E-UTRAN.

In Dual Connectivity, two MAC entities are configured in the UE: one for the MCG and one for the SCG. Each MAC entity is configured by RRC with a serving cell supporting PUCCH transmission and contention based Random Access. In this specification, the term SpCell refers to such cell, whereas the term SCell refers to other serving cells. The term SpCell either refers to the PCell of the MCG or the PSCell of the SCG depending on if the MAC entity is associated to the MCG or the SCG, respectively. A Timing Advance Group containing the SpCell of a MAC entity is referred to as pTAG, whereas the term sTAG refers to other TAGs.

The functions of the different MAC entities in the UE operate independently if not otherwise indicated. The timers and paramenters used in each MAC entity are configured independently if not otherwise indicated. The Serving Cells, C-RNTI, radio bearers, logical channels, upper and lower layer entities, LCGs, and HARQ entities considered by each MAC entity refer to those mapped to that MAC entity if not otherwise indicated.

If the MAC entity is configured with one or more SCells, there are multiple DL-SCH and there may be multiple UL-SCH and RACH per MAC entity; one DL-SCH and UL-SCH on the SpCell, one DL-SCH, zero or one UL-SCH and zero or one RACH for each SCell.

The physical layer may perform a listen-before-talk procedure, according to which transmissions are not performed if the channel is identified as being occupied. In this case a MAC entity considers the transmission to have been performed anyway, unless stated otherwise.

Figure 4.2.1-1 illustrates one possible structure for the UE side MAC entity when SCG is not configured, and it should not restrict implementation.

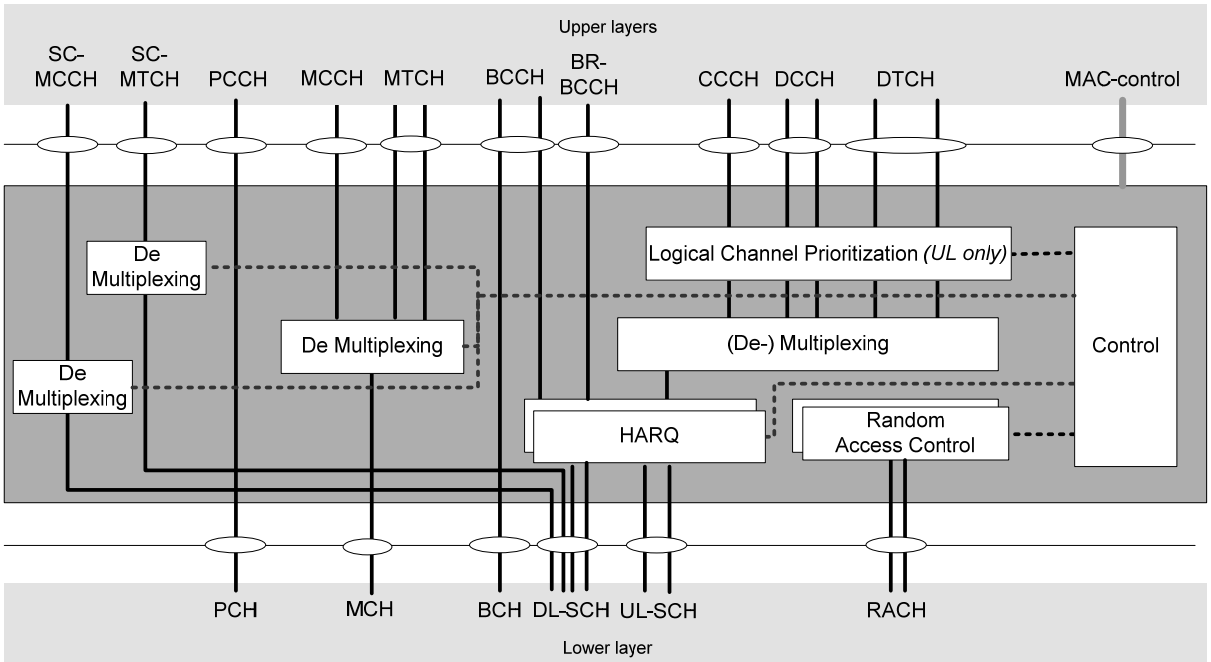

Figure 4.2.1-1: MAC structure overview, UE side

Figure 4.2.1-2 illustrates one possible structure for the UE side MAC entities when MCG and SCG are configured, and it should not restrict implementation. MBMS reception and SC-PTM reception are excluded from this figure for simplicity.

ASUS EX2033
Samsung v. ASUS
IPR2024-00614

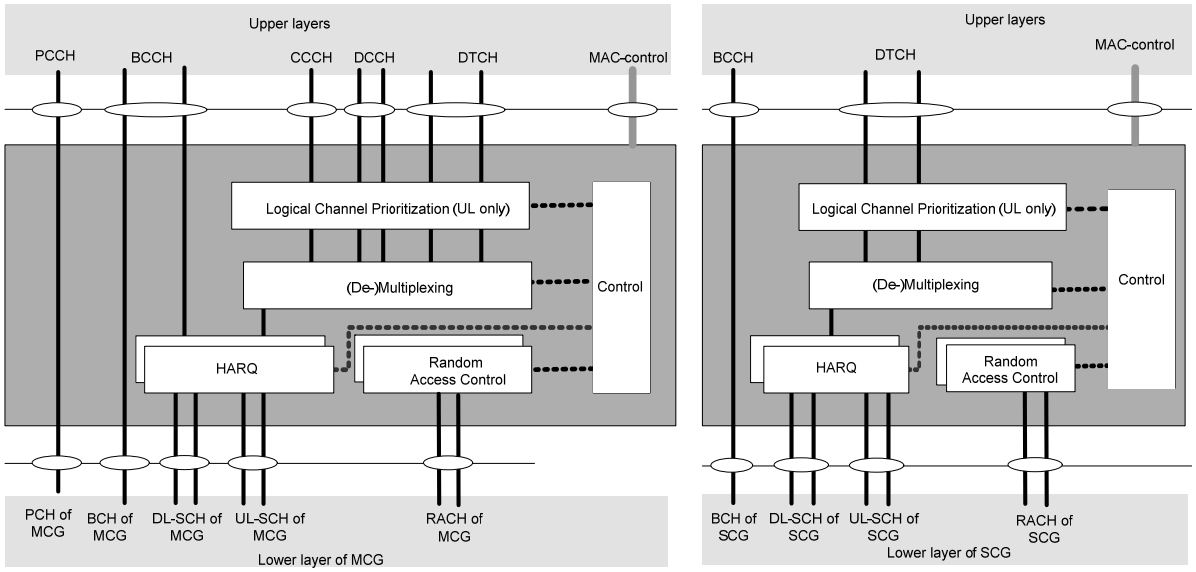

Figure 4.2.1-2: MAC structure overview with two MAC entities, UE side

Figure 4.2.1-3 illustrates one possible structure for the UE side MAC entity when sidelink is configured, and it should not restrict implementation.

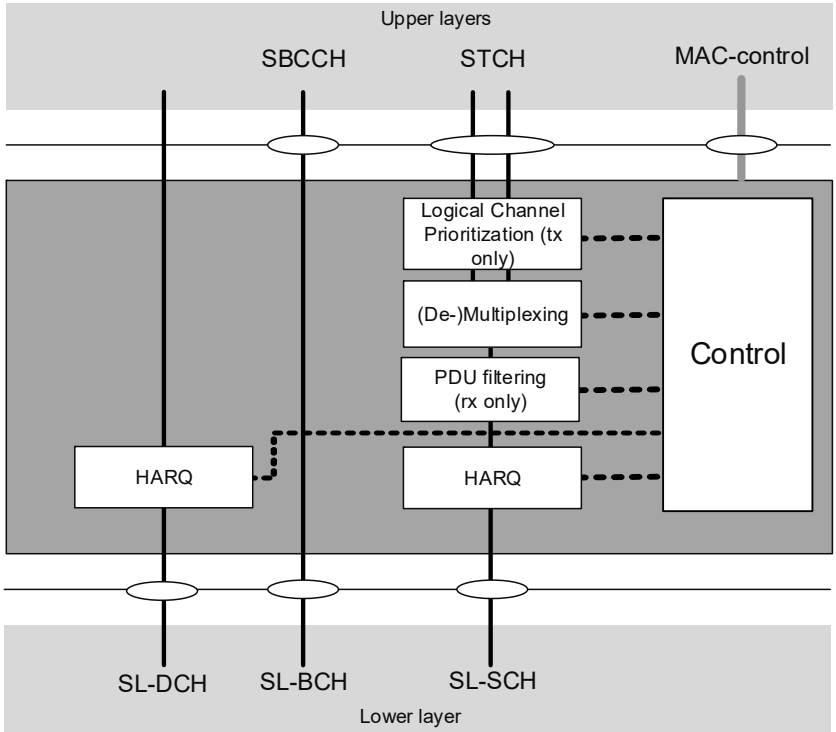

Figure 4.2.1-3: MAC structure overview for sidelink, UE side

ASUS EX2033
Samsung v. ASUS
IPR2024-00614

4.3 Services

4.3.1 Services provided to upper layers

This clause describes the different services provided by MAC sublayer to upper layers.

- data transfer
- radio resource allocation

4.3.2 Services expected from physical layer

The physical layer provides the following services to MAC:

- data transfer services;
- signalling of HARQ feedback;
- signalling of Scheduling Request;
- measurements (e.g. Channel Quality Indication (CQI)).

The access to the data transfer services is through the use of transport channels. The characteristics of a transport channel are defined by its transport format (or format set), specifying the physical layer processing to be applied to the transport channel in question, such as channel coding and interleaving, and any service-specific rate matching as needed.

4.4 Functions

The following functions are supported by MAC sublayer:

- mapping between logical channels and transport channels;
- multiplexing of MAC SDUs from one or different logical channels onto transport blocks (TB) to be delivered to the physical layer on transport channels;
- demultiplexing of MAC SDUs from one or different logical channels from transport blocks (TB) delivered from the physical layer on transport channels;
- scheduling information reporting;
- error correction through HARQ;
- priority handling between UEs by means of dynamic scheduling;
- priority handling between logical channels of one MAC entity;
- Logical Channel prioritisation;
- transport format selection;
- radio resource selection for SL.

The location of the different functions and their relevance for uplink and downlink respectively is illustrated in Table 4.4-1.

ASUS EX2033
Samsung v. ASUS
IPR2024-00614

Table 4.4-1: MAC function location and link direction association.

MAC function	UE	eNB	Downlink	Uplink	Sidelink tx	Sidelink rx
Mapping between logical channels and transport channels	X		X	X	X	X
		X	X	X		
Multiplexing	X			X	X	
		X	X			
Demultiplexing	X		X			X
		X		X		
Error correction through HARQ	X		X	X	X	X
		X	X	X		
Transport Format Selection		X	X	X		
	X	X			X	
Priority handling between UEs		X	X	X		
Priority handling between logical channels of one MAC entity		X	X	X		
Logical Channel prioritisation	X			X	X	
Scheduling information reporting	X			X		
Radio Resource Selection	X				X	

4.5 Channel structure

The MAC sublayer operates on the channels defined below; transport channels are SAPs between MAC and Layer 1, logical channels are SAPs between MAC and RLC.

4.5.1 Transport Channels

The transport channels used by MAC are described in Table 4.5.1-1 below.

Table 4.5.1-1: Transport channels used by MAC

Transport channel name	Acronym	Downlink	Uplink	Sidelink tx	Sidelink rx
Broadcast Channel	BCH	X			
Downlink Shared Channel	DL-SCH	X			
Paging Channel	PCH	X			
Multicast Channel	MCH	X			
Uplink Shared Channel	UL-SCH		X		
Random Access Channel	RACH		X		
Sidelink Broadcast Channel	SL-BCH			X	X
Sidelink Discovery Channel	SL-DCH			X	X
Sidelink Shared Channel	SL-SCH			X	X

4.5.2 Logical Channels

The MAC layer provides data transfer services on logical channels. A set of logical channel types is defined for different kinds of data transfer services as offered by MAC.

Each logical channel type is defined by what type of information is transferred.

MAC provides the control and traffic channels listed in Table 4.5.2-1 below.

ASUS EX2033
Samsung v. ASUS
IPR2024-00614

Table 4.5.2-1: Logical channels provided by MAC.

Logical channel name	Acronym	Control channel	Traffic channel
Broadcast Control Channel	BCCH	X	
Bandwidth Reduced Broadcast Control Channel	BR-BCCH	X	
Paging Control Channel	PCCH	X	
Common Control Channel	CCCH	X	
Dedicated Control Channel	DCCH	X	
Multicast Control Channel	MCCH	X	
Single Cell Multicast Control Channel	SC-MCCH	X	
Dedicated Traffic Channel	DTCH		X
Multicast Traffic Channel	MTCH		X
Single-Cell Multicast Traffic Channel	SC-MTCH		X
Sidelink Traffic Channel	STCH		X
Sidelink Broadcast Control Channel	SBCCH	X	

4.5.3 Mapping of Transport Channels to Logical Channels

The mapping of logical channels on transport channels depends on the multiplexing that is configured by RRC.

4.5.3.1 Uplink mapping

The MAC entity is responsible for mapping logical channels for the uplink onto uplink transport channels. The uplink logical channels can be mapped as described in Figure 4.5.3.1-1 and Table 4.5.3.1-1.

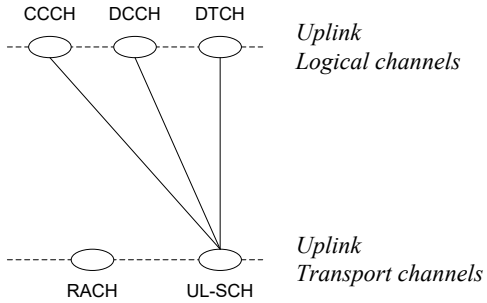

Figure 4.5.3.1-1

Table 4.5.3.1-1: Uplink channel mapping.

Transport channel / Logical channel	UL-SCH	RACH
CCCH	X	
DCCH	X	
DTCH	X	

4.5.3.2 Downlink mapping

The MAC entity is responsible for mapping the downlink logical channels to downlink transport channels. The downlink logical channels can be mapped as described in Figure 4.5.3.2-1 and Table 4.5.3.2-1.

ASUS EX2033
Samsung v. ASUS
IPR2024-00614

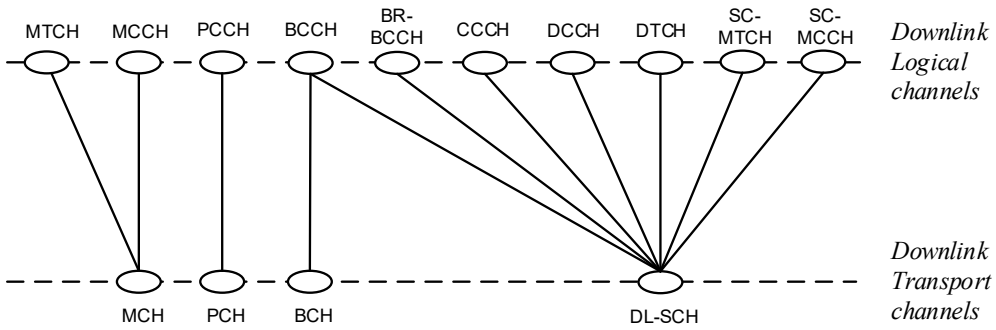

Figure 4.5.3.2-1

Table 4.5.3.2-1: Downlink channel mapping.

Transport channel / Logical channel	BCH	PCH	DL-SCH	MCH
BCCH	X		X	
BR-BCCH			X	
PCCH		X		
CCCH			X	
DCCH			X	
DTCH			X	
MCCH				X
MTCH				X
SC-MCCH			X	
SC-MTCH			X	

4.5.3.3 Sidelink mapping

The MAC entity is responsible for mapping the sidelink logical channels to sidelink transport channels. The sidelink logical channels can be mapped as described in Figure 4.5.3.3-1 and Table 4.5.3.3-1.

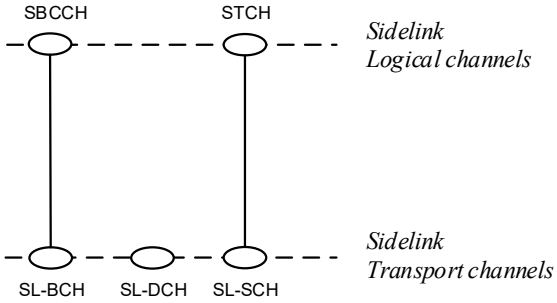

Figure 4.5.3.3-1

Table 4.5.3.3-1: Sidelink channel mapping.

Transport channel / Logical channel	SL-SCH	SL-BCH	SL-DCH
STCH	X		
SBCCH		X	

ASUS EX2033
Samsung v. ASUS
IPR2024-00614

5 MAC procedures

5.1 Random Access procedure

5.1.1 Random Access Procedure initialization

The Random Access procedure described in this subclause is initiated by a PDCCH order, by the MAC sublayer itself or by the RRC sublayer. Random Access procedure on an SCell shall only be initiated by a PDCCH order. If a MAC entity receives a PDCCH transmission consistent with a PDCCH order [5] masked with its C-RNTI, and for a specific Serving Cell, the MAC entity shall initiate a Random Access procedure on this Serving Cell. For Random Access on the SpCell a PDCCH order or RRC optionally indicate the *ra-PreambleIndex* and the *ra-PRACH-MaskIndex*, except for NB-IoT where the subcarrier index is indicated; and for Random Access on an SCell, the PDCCH order indicates the *ra-PreambleIndex* with a value different from 000000 and the *ra-PRACH-MaskIndex*. For the pTAG preamble transmission on PRACH and reception of a PDCCH order are only supported for SpCell. If the UE is an NB-IoT UE and is configured with a non-anchor carrier, perform the Random Access procedure on the anchor carrier.

Before the procedure can be initiated, the following information for related Serving Cell is assumed to be available for UEs other than NB-IoT UEs, BL UEs or UEs in enhanced coverage [8], unless explicitly stated otherwise:

- the available set of PRACH resources for the transmission of the Random Access Preamble, *prach-ConfigIndex*.
- the groups of Random Access Preambles and the set of available Random Access Preambles in each group (SpCell only):

  The preambles that are contained in Random Access Preambles group A and Random Access Preambles group B are calculated from the parameters *numberOfRA-Preambles* and *sizeOfRA-PreamblesGroupA*:

  If *sizeOfRA-PreamblesGroupA* is equal to *numberOfRA-Preambles* then there is no Random Access Preambles group B. The preambles in Random Access Preamble group A are the preambles 0 to *sizeOfRA-PreamblesGroupA* – 1 and, if it exists, the preambles in Random Access Preamble group B are the preambles *sizeOfRA-PreamblesGroupA* to *numberOfRA-Preambles* – 1 from the set of 64 preambles as defined in [7].
- if Random Access Preambles group B exists, the thresholds, *messagePowerOffsetGroupB* and *messageSizeGroupA*, the configured UE transmitted power of the Serving Cell performing the Random Access Procedure, $P_{CMAX,c}$ [10], and the offset between the preamble and Msg3, *deltaPreambleMsg3*, that are required for selecting one of the two groups of Random Access Preambles (SpCell only).
- the RA response window size *ra-ResponseWindowSize*.
- the power-ramping factor *powerRampingStep*.
- the maximum number of preamble transmission *preambleTransMax*.
- the initial preamble power *preambleInitialReceivedTargetPower*.
- the preamble format based offset DELTA_PREAMBLE (see subclause 7.6).
- the maximum number of Msg3 HARQ transmissions *maxHARQ-Msg3Tx* (SpCell only).
- the Contention Resolution Timer *mac-ContentionResolutionTimer* (SpCell only).

NOTE: The above parameters may be updated from upper layers before each Random Access procedure is initiated.

The following information for related Serving Cell is assumed to be available before the procedure can be initiated for NB-IoT UEs, BL UEs or UEs in enhanced coverage [8]:

- if the UE is a BL UE or a UE in enhanced coverage:
  - the available set of PRACH resources associated with each enhanced coverage level supported in the Serving Cell for the transmission of the Random Access Preamble, *prach-ConfigIndex*.

ASUS EX2033
Samsung v. ASUS
IPR2024-00614

- the groups of Random Access Preambles and the set of available Random Access Preambles in each group(SpCell only):

  The preambles that are contained in Random Access Preamble groups for each enhanced coverage level, if it exists, are the preambles *firstPreamble* to *lastPreamble*.

  If *sizeOfRA-PreamblesGroupA* is not equal to *numberOfRA-Preambles*, Random Access Preambles group B exists for all enhanced coverage levels and is calculated as above.

NOTE: If Random Access Preamble group B exists, the eNB should ensure that at least one Random Access Preamble is contained in Random Access Preamble group A and Random Access Preamble group B for all enhanced coverage level.

- if the UE is a NB-IoT UE:
  - the available set of PRACH resources supported in the Serving Cell, *nprach-ParametersList*.
  - for random access resource selection and preamble transmission:
    - a PRACH resource is mapped into an enhanced coverage level.
    - each PRACH resource contains a set of *nprach-NumSubcarriers* subcarriers which can be partitioned into one or two groups for single/multi-tone Msg3 transmission by *nprach-SubcarrierMSG3-RangeStart*. Each group is referred to as a Random Access Preamble group below in the procedure text.
      - a subcarrier is identified by the subcarrier index in the range: [*nprach-SubcarrierOffset*, *nprach-SubcarrierOffset* + *nprach-NumSubcarriers* -1]
      - each subcarrier of a Random Access Preamble group corresponds to a Random Access Preamble.
    - when the subcarrier index is explicitly sent from the eNB as part of a PDCCH order *ra-PreambleIndex* shall be set to the signalled subcarrier index.
  - the mapping of the PRACH resources into enhanced coverage levels is determined according to the following:
    - the number of enhanced coverage levels is equal to one plus the number of RSRP thresholds present in *RSRP-ThresholdsPrachInfoList*.
    - each enhanced coverage level has one PRACH resource present in *nprach-ParametersList*.
    - enhanced coverage levels are numbered from 0 and the mapping of PRACH resources to enhanced coverage levels are done in increasing *numRepetitionsPerPreambleAttempt* order.
- the criteria to select PRACH resources based on RSRP measurement per enhanced coverage level supported in the Serving Cell *rsrp-ThresholdsPrachInfoList*.
- the maximum number of preamble transmission attempts per enhanced coverage level supported in the Serving Cell *maxNumPreambleAttemptCE*.
- the number of repetitions required for preamble transmission per attempt for each enhanced coverage level supported in the Serving Cell *numRepetitionPerPreambleAttempt*.
- the configured UE transmitted power of the Serving Cell performing the Random Access Procedure, $P_{CMAX,c}$ [10].
- the RA response window size *ra-ResponseWindowSize* and the Contention Resolution Timer *mac-ContentionResolutionTimer* (SpCell only) per enhanced coverage level supported in the Serving Cell.
- the power-ramping factor *powerRampingStep*.
- the maximum number of preamble transmission *preambleTransMax-CE*.
- the initial preamble power *preambleInitialReceivedTargetPower*.
- the preamble format based offset DELTA_PREAMBLE (see subclause 7.6). For NB-IoT the DELTA_PREAMBLE is set to 0.

ASUS EX2033
Samsung v. ASUS
IPR2024-00614

The Random Access procedure shall be performed as follows:

- Flush the Msg3 buffer;
- set the PREAMBLE_TRANSMISSION_COUNTER to 1;
- if the UE is an NB-IoT UE, a BL UE or a UE in enhanced coverage:
  - set the PREAMBLE_TRANSMISSION_COUNTER_CE to 1;
  - if the starting enhanced coverage level, or for NB-IoT the initial number of PRACH repetitions, has been indicated in the PDCCH order which initiated the Random Access procedure, or if the starting enhanced coverage level has been provided by upper layers:
    - the MAC entity considers itself to be in that enhanced coverage level regardless of the measured RSRP;
  - else:
    - if the RSRP threshold of enhanced coverage level 3 is configured by upper layers in *rsrp-ThresholdsPrachInfoList* and the measured RSRP is less than the RSRP threshold of enhanced coverage level 3 and the UE is capable of enhanced coverage level 3 then:
      - the MAC entity considers to be in enhanced coverage level 3;
    - else if the RSRP threshold of enhanced coverage level 2 configured by upper layers in *rsrp-ThresholdsPrachInfoList* and the measured RSRP is less than the RSRP threshold of enhanced coverage level 2 and the UE is capable of enhanced coverage level 2 then:
      - the MAC entity considers to be in enhanced coverage level 2;
    - else if the measured RSRP is less than the RSRP threshold of enhanced coverage level 1 as configured by upper layers in *rsrp-ThresholdsPrachInfoList* then:
      - the MAC entity considers to be in enhanced coverage level 1;
    - else:
      - the MAC entity considers to be in enhanced coverage level 0;
- set the backoff parameter value to 0 ms;
- for the RN, suspend any RN subframe configuration;
- proceed to the selection of the Random Access Resource (see subclause 5.1.2).

NOTE: There is only one Random Access procedure ongoing at any point in time in a MAC entity. If the MAC entity receives a request for a new Random Access procedure while another is already ongoing in the MAC entity, it is up to UE implementation whether to continue with the ongoing procedure or start with the new procedure.

5.1.2 Random Access Resource selection

The Random Access Resource selection procedure shall be performed as follows:

- If, except for NB-IoT, *ra-PreambleIndex* (Random Access Preamble) and *ra-PRACH-MaskIndex* (PRACH Mask Index) have been explicitly signalled and *ra-PreambleIndex* is not 000000:
  - the Random Access Preamble and the PRACH Mask Index are those explicitly signalled;
- else, for NB-IoT, if *ra-PreambleIndex* (Random Access Preamble) and PRACH resource have been explicitly signalled:
  - the PRACH resource is that explicitly signalled;
  - if the *ra-PreambleIndex* signalled is not 000000:

ASUS EX2033
Samsung v. ASUS
IPR2024-00614

    - the Random Access Preamble is set to *nprach-SubcarrierOffset* + (*ra-PreambleIndex* modulo *nprach-NumSubcarriers*), where *nprach-SubcarrierOffset* and *nprach-NumSubcarriers* are parameters in the currently used PRACH resource.

  - else:

    - select the Random Access Preamble group according to the PRACH resource and the support for multi-tone Msg3 transmission.

    - randomly select a Random Access Preamble within the selected group.

- else the Random Access Preamble shall be selected by the MAC entity as follows:

  - If Msg3 has not yet been transmitted, the MAC entity shall, for NB-IoT UEs, BL UEs or UEs in enhanced coverage:

    - expect for NB-IoT, select the Random Access Preambles group and the PRACH resource corresponding to the selected enhanced coverage level;

    - for NB-IoT, select the PRACH resource corresponding to the selected enhanced coverage level, and select the Random Access Preambles group corresponding to the PRACH resource and the support for multi-tone Msg3 transmission;

  - If Msg3 has not yet been transmitted, the MAC entity shall, except for BL UEs or UEs in enhanced coverage in case preamble group B does not exists, or for NB-IoT UEs:

    - if Random Access Preambles group B exists and any of the following events occur:

      - the potential message size (UL data available for transmission plus MAC header and, where required, MAC control elements) is greater than *messageSizeGroupA* and the pathloss is less than $P_{CMAX,c}$ (of the Serving Cell performing the Random Access Procedure) – *preambleInitialReceivedTargetPower* – *deltaPreambleMsg3* – *messagePowerOffsetGroupB*;

      - the Random Access procedure was initiated for the CCCH logical channel and the CCCH SDU size plus MAC header is greater than *messageSizeGroupA*;

        - select the Random Access Preambles group B;

    - else:

      - select the Random Access Preambles group A.

  - else, if Msg3 is being retransmitted, the MAC entity shall:

    - select the same group of Random Access Preambles as was used for the preamble transmission attempt corresponding to the first transmission of Msg3.

  - randomly select a Random Access Preamble within the selected group. The random function shall be such that each of the allowed selections can be chosen with equal probability;

  - except for NB-IoT, set PRACH Mask Index to 0.

- determine the next available subframe containing PRACH permitted by the restrictions given by the *prach-ConfigIndex* (except for NB-IoT), the PRACH Mask Index (except for NB-IoT, see subclause 7.3), physical layer timing requirements [2] and in case of NB-IoT, the subframes occupied by PRACH resources related to a higher enhanced coverage level (a MAC entity may take into account the possible occurrence of measurement gaps when determining the next available PRACH subframe);

- if the transmission mode is TDD and the PRACH Mask Index is equal to zero:

  - if *ra-PreambleIndex* was explicitly signalled and it was not 000000 (i.e., not selected by MAC):

    - randomly select, with equal probability, one PRACH from the PRACHs available in the determined subframe.

  - else:

ASUS EX2033
Samsung v. ASUS
IPR2024-00614

    - randomly select, with equal probability, one PRACH from the PRACHs available in the determined subframe and the next two consecutive subframes.

- else:
    - determine a PRACH within the determined subframe in accordance with the requirements of the PRACH Mask Index, if any.

- for NB-IoT UEs, BL UEs or UEs in enhanced coverage, select the *ra-ResponseWindowSize* and *mac-ContentionResolutionTimer* corresponding to the selected enhanced coverage level and PRACH.

- proceed to the transmission of the Random Access Preamble (see subclause 5.1.3).

5.1.3 Random Access Preamble transmission

The random-access procedure shall be performed as follows:

- set PREAMBLE_RECEIVED_TARGET_POWER to *preambleInitialReceivedTargetPower* + DELTA_PREAMBLE + (PREAMBLE_TRANSMISSION_COUNTER – 1) * *powerRampingStep*;

- if the UE is a BL UE or a UE in enhanced coverage:
    - the PREAMBLE_RECEIVED_TARGET_POWER is set to: PREAMBLE_RECEIVED_TARGET_POWER - 10 * log10(*numRepetitionPerPreambleAttempt*);

- if NB-IoT:
    - for enhanced coverage level 0, the PREAMBLE_RECEIVED_TARGET_POWER is set to: PREAMBLE_RECEIVED_TARGET_POWER - 10 * log10(*numRepetitionPerPreambleAttempt*)
    - for other enhanced coverage levels, the PREAMBLE_RECEIVED_TARGET_POWER is set corresponding to the max UE output power;

- if the UE is an NB-IoT UE, a BL UE or a UE in enhanced coverage:
    - instruct the physical layer to transmit a preamble with the number of repetitions required for preamble transmission corresponding to the selected preamble group (i.e., *numRepetitionPerPreambleAttempt*) using the selected PRACH corresponding to the selected enhanced coverage level, corresponding RA-RNTI, preamble index or for NB-IoT subcarrier index, and PREAMBLE_RECEIVED_TARGET_POWER.

- else:
    - instruct the physical layer to transmit a preamble using the selected PRACH, corresponding RA-RNTI, preamble index and PREAMBLE_RECEIVED_TARGET_POWER.

5.1.4 Random Access Response reception

Once the Random Access Preamble is transmitted and regardless of the possible occurrence of a measurement gap or a Sidelink Discovery Gap for Transmission or a Sidelink Discovery Gap for Reception, the MAC entity shall monitor the PDCCH of the SpCell for Random Access Response(s) identified by the RA-RNTI defined below, in the RA Response window which starts at the subframe that contains the end of the preamble transmission [7] plus three subframes and has length *ra-ResponseWindowSize*. If the UE is a BL UE or a UE in enhanced coverage, RA Response window starts at the subframe that contains the end of the last preamble repetition plus three subframes and has length *ra-ResponseWindowSize* for the corresponding coverage level. If the UE is an NB-IoT UE, in case the number of NPRACH repetitions is greater than or equal to 64, RA Response window starts at the subframe that contains the end of the last preamble repetition plus 41 subframes and has length *ra-ResponseWindowSize* for the corresponding coverage level, and in case the number of NPRACH repetitions is less than 64, RA Response window starts at the subframe that contains the end of the last preamble repetition plus 4 subframes and has length *ra-ResponseWindowSize* for the corresponding coverage level. The RA-RNTI associated with the PRACH in which the Random Access Preamble is transmitted, is computed as:

$$\text{RA-RNTI} = 1 + t_id + 10 * f_id$$

ASUS EX2033
Samsung v. ASUS
IPR2024-00614

where t_id is the index of the first subframe of the specified PRACH (0≤ t_id <10), and f_id is the index of the specified PRACH within that subframe, in ascending order of frequency domain (0≤ f_id< 6) except for NB-IoT UEs, BL UEs or UEs in enhanced coverage. If the PRACH resource is on a TDD carrier, the f_id is set to f_{RA}, where f_{RA} is defined in Section 5.7.1 of [7].

For BL UEs and UEs in enhanced coverage, RA-RNTI associated with the PRACH in which the Random Access Preamble is transmitted, is computed as:

RA-RNTI=1+t_id + 10*f_id + 60*(SFN_id mod (Wmax/10))

where t_id is the index of the first subframe of the specified PRACH (0≤ t_id <10), f_id is the index of the specified PRACH within that subframe, in ascending order of frequency domain (0≤ f_id< 6), SFN_id is the index of the first radio frame of the specified PRACH, and Wmax is 400, maximum possible RAR window size in subframes for BL UEs or UEs in enhanced coverage. If the PRACH resource is on a TDD carrier, the f_id is set to f_{RA}, where f_{RA} is defined in Section 5.7.1 of [7].

For NB-IoT UEs, the RA-RNTI associated with the PRACH in which the Random Access Preamble is transmitted, is computed as:

RA-RNTI=1+ floor(SFN_id/4)

where SFN_id is the index of the first radio frame of the specified PRACH.

The MAC entity may stop monitoring for Random Access Response(s) after successful reception of a Random Access Response containing Random Access Preamble identifiers that matches the transmitted Random Access Preamble.

- If a downlink assignment for this TTI has been received on the PDCCH for the RA-RNTI and the received TB is successfully decoded, the MAC entity shall regardless of the possible occurrence of a measurement gap or a Sidelink Discovery Gap for Transmission or a Sidelink Discovery Gap for Reception:
  - if the Random Access Response contains a Backoff Indicator subheader:
    - set the backoff parameter value as indicated by the BI field of the Backoff Indicator subheader and Table 7.2-1, except for NB-IoT where the value from Table 7.2-2 is used.
  - else, set the backoff parameter value to 0 ms.
  - if the Random Access Response contains a Random Access Preamble identifier corresponding to the transmitted Random Access Preamble (see subclause 5.1.3), the MAC entity shall:
    - consider this Random Access Response reception successful and apply the following actions for the serving cell where the Random Access Preamble was transmitted:
      - process the received Timing Advance Command (see subclause 5.2);
      - indicate the *preambleInitialReceivedTargetPower* and the amount of power ramping applied to the latest preamble transmission to lower layers (i.e., (PREAMBLE_TRANSMISSION_COUNTER – 1) * *powerRampingStep*);
      - process the received UL grant value and indicate it to the lower layers;
    - if *ra-PreambleIndex* was explicitly signalled and it was not 000000 (i.e., not selected by MAC):
      - consider the Random Access procedure successfully completed.
    - else, if the Random Access Preamble was selected by the MAC entity:
      - set the Temporary C-RNTI to the value received in the Random Access Response message no later than at the time of the first transmission corresponding to the UL grant provided in the Random Access Response message;
      - if this is the first successfully received Random Access Response within this Random Access procedure:

ASUS EX2033
Samsung v. ASUS
IPR2024-00614

- if the transmission is not being made for the CCCH logical channel, indicate to the Multiplexing and assembly entity to include a C-RNTI MAC control element in the subsequent uplink transmission;
- obtain the MAC PDU to transmit from the "Multiplexing and assembly" entity and store it in the Msg3 buffer.

NOTE: When an uplink transmission is required, e.g., for contention resolution, the eNB should not provide a grant smaller than 56 bits (or 88 bits for NB-IoT) in the Random Access Response.

NOTE: If within a Random Access procedure, an uplink grant provided in the Random Access Response for the same group of Random Access Preambles has a different size than the first uplink grant allocated during that Random Access procedure, the UE behavior is not defined.

If no Random Access Response is received within the RA Response window, or if none of all received Random Access Responses contains a Random Access Preamble identifier corresponding to the transmitted Random Access Preamble, the Random Access Response reception is considered not successful and the MAC entity shall:

- if the notification of power ramping suspension has not been received from lower layers:
  - increment PREAMBLE_TRANSMISSION_COUNTER by 1;
- if the UE is an NB-IoT UE, a BL UE or a UE in enhanced coverage:
  - if PREAMBLE_TRANSMISSION_COUNTER = *preambleTransMax-CE* + 1:
    - if the Random Access Preamble is transmitted on the SpCell:
      - indicate a Random Access problem to upper layers;
      - if NB-IoT:
        - consider the Random Access procedure unsuccessfully completed;
- else:
  - if PREAMBLE_TRANSMISSION_COUNTER = *preambleTransMax* + 1:
    - if the Random Access Preamble is transmitted on the SpCell:
      - indicate a Random Access problem to upper layers;
    - if the Random Access Preamble is transmitted on an SCell:
      - consider the Random Access procedure unsuccessfully completed.
- if in this Random Access procedure, the Random Access Preamble was selected by MAC:
  - based on the backoff parameter, select a random backoff time according to a uniform distribution between 0 and the Backoff Parameter Value;
  - delay the subsequent Random Access transmission by the backoff time;
- if the UE is an NB-IoT UE, a BL UE or a UE in enhanced coverage:
  - increment PREAMBLE_TRANSMISSION_COUNTER_CE by 1;
  - if PREAMBLE_TRANSMISSION_COUNTER_CE = *maxNumPreambleAttemptCE* for the corresponding enhanced coverage level + 1:
    - reset PREAMBLE_TRANSMISSION_COUNTER_CE;
    - consider to be in the next enhanced coverage level, if it is supported by the Serving Cell and the UE, otherwise stay in the current enhanced coverage level;
    - select the Random Access Preambles group, *ra-ResponseWindowSize*, *mac-ContentionResolutionTimer*, and PRACH resource corresponding to the selected enhanced coverage level;

ASUS EX2033
Samsung v. ASUS
IPR2024-00614

    - if the UE is an NB-IoT UE:
        - if the Random Access Procedure was initiated by a PDCCH order:
- consider the PRACH resource corresponding to the selected enhanced coverage level as explicitly signalled;
- proceed to the selection of a Random Access Resource (see subclause 5.1.2).

5.1.5 Contention Resolution

Contention Resolution is based on either C-RNTI on PDCCH of the SpCell or UE Contention Resolution Identity on DL-SCH. If the UE is an NB-IoT UE, a BL UE or a UE in enhanced coverage, the MAC entity shall use the *mac-ContentionResolutionTimer* for the corresponding enhanced coverage level if it exists.

Once Msg3 is transmitted, the MAC entity shall:

- start *mac-ContentionResolutionTimer* and restart *mac-ContentionResolutionTimer* at each HARQ retransmission;
- regardless of the possible occurrence of a measurement gap or Sidelink Discovery Gap for Reception, monitor the PDCCH until *mac-ContentionResolutionTimer* expires or is stopped;
- if notification of a reception of a PDCCH transmission is received from lower layers, the MAC entity shall:
    - if the C-RNTI MAC control element was included in Msg3:
        - if the Random Access procedure was initiated by the MAC sublayer itself or by the RRC sublayer and the PDCCH transmission is addressed to the C-RNTI and contains an UL grant for a new transmission; or
        - if the Random Access procedure was initiated by a PDCCH order and the PDCCH transmission is addressed to the C-RNTI:
            - consider this Contention Resolution successful;
            - stop *mac-ContentionResolutionTimer*;
            - discard the Temporary C-RNTI;
            - if the UE is an NB-IoT UE and is configured with a non-anchor carrier:
                - the UL grant or DL assignment contained in the PDCCH transmission on the anchor carrier is valid only for the non-anchor carrier.
            - consider this Random Access procedure successfully completed.
    - else if the CCCH SDU was included in Msg3 and the PDCCH transmission is addressed to its Temporary C-RNTI:
        - if the MAC PDU is successfully decoded:
            - stop *mac-ContentionResolutionTimer*;
            - if the MAC PDU contains a UE Contention Resolution Identity MAC control element; and
            - if the UE Contention Resolution Identity included in the MAC control element matches the 48 first bits of the CCCH SDU transmitted in Msg3:
                - consider this Contention Resolution successful and finish the disassembly and demultiplexing of the MAC PDU;
                - set the C-RNTI to the value of the Temporary C-RNTI;
                - discard the Temporary C-RNTI;
                - consider this Random Access procedure successfully completed.
            - else

ASUS EX2033
Samsung v. ASUS
IPR2024-00614

        - discard the Temporary C-RNTI;
        - consider this Contention Resolution not successful and discard the successfully decoded MAC PDU.

- if *mac-ContentionResolutionTimer* expires:
    - discard the Temporary C-RNTI;
    - consider the Contention Resolution not successful.
- if the Contention Resolution is considered not successful the MAC entity shall:
    - flush the HARQ buffer used for transmission of the MAC PDU in the Msg3 buffer;
    - if the notification of power ramping suspension has not been received from lower layers:
        - increment PREAMBLE_TRANSMISSION_COUNTER by 1;
    - if the UE is an NB-IoT UE, a BL UE or a UE in enhanced coverage:
        - if PREAMBLE_TRANSMISSION_COUNTER = *preambleTransMax-CE* + 1:
            - indicate a Random Access problem to upper layers.
            - if NB-IoT:
                - consider the Random Access procedure unsuccessfully completed;
    - else:
        - if PREAMBLE_TRANSMISSION_COUNTER = *preambleTransMax* + 1:
            - indicate a Random Access problem to upper layers.
    - based on the backoff parameter, select a random backoff time according to a uniform distribution between 0 and the Backoff Parameter Value;
    - delay the subsequent Random Access transmission by the backoff time;
    - proceed to the selection of a Random Access Resource (see subclause 5.1.2).

5.1.6 Completion of the Random Access procedure

At completion of the Random Access procedure, the MAC entity shall:

- discard explicitly signalled *ra-PreambleIndex* and *ra-PRACH-MaskIndex*, if any;
- flush the HARQ buffer used for transmission of the MAC PDU in the Msg3 buffer.

In addition, the RN shall resume the suspended RN subframe configuration, if any.

5.2 Maintenance of Uplink Time Alignment

The MAC entity has a configurable timer *timeAlignmentTimer* per TAG. The *timeAlignmentTimer* is used to control how long the MAC entity considers the Serving Cells belonging to the associated TAG to be uplink time aligned [8].

The MAC entity shall:

- when a Timing Advance Command MAC control element is received:
    - apply the Timing Advance Command for the indicated TAG;
    - start or restart the *timeAlignmentTimer* associated with the indicated TAG.

ASUS EX2033
Samsung v. ASUS
IPR2024-00614

- when a Timing Advance Command is received in a Random Access Response message for a serving cell belonging to a TAG:
  - if the Random Access Preamble was not selected by the MAC entity:
    - apply the Timing Advance Command for this TAG;
    - start or restart the *timeAlignmentTimer* associated with this TAG.
  - else, if the *timeAlignmentTimer* associated with this TAG is not running:
    - apply the Timing Advance Command for this TAG;
    - start the *timeAlignmentTimer* associated with this TAG;
    - when the contention resolution is considered not successful as described in subclause 5.1.5, stop *timeAlignmentTimer* associated with this TAG.
  - else:
    - ignore the received Timing Advance Command.
- when a *timeAlignmentTimer* expires:
  - if the *timeAlignmentTimer* is associated with the pTAG:
    - flush all HARQ buffers for all serving cells;
    - notify RRC to release PUCCH for all serving cells;
    - notify RRC to release SRS for all serving cells;
    - clear any configured downlink assignments and uplink grants;
    - consider all running *timeAlignmentTimer*s as expired;
  - else if the *timeAlignmentTimer* is associated with an sTAG, then for all Serving Cells belonging to this TAG*:*
    - flush all HARQ buffers;
    - notify RRC to release SRS;
    - notify RRC to release PUCCH, if configured.

When the MAC entity stops uplink transmissions for an SCell due to the fact that the maximum uplink transmission timing difference (as described in subclause 7.9.2 of TS 36.133 [9]) or the maximum uplink transmission timing difference the UE can handle between TAGs of any MAC entity of the UE is exceeded, the MAC entity considers the *timeAlignmentTimer* associated with the SCell as expired.

The MAC entity shall not perform any uplink transmission on a Serving Cell except the Random Access Preamble transmission when the *timeAlignmentTimer* associated with the TAG to which this Serving Cell belongs is not running. Furthermore, when the *timeAlignmentTimer* associated with the pTAG is not running, the MAC entity shall not perform any uplink transmission on any Serving Cell except the Random Access Preamble transmission on the SpCell.

The MAC entity shall not perform any sidelink transmission which is performed based on UL timing of the corresponding serving cell and any associated SCI transmissions when the corresponding *timeAlignmentTimer* is not running.

NOTE: A MAC entity stores or maintains N_{TA} upon expiry of associated *timeAlignmentTimer*, where N_{TA} is defined in [7]. The MAC entity applies a received Timing Advance Command MAC control element and starts associated *timeAlignmentTimer* also when the *timeAlignmentTimer* is not running.

ASUS EX2033
Samsung v. ASUS
IPR2024-00614

5.3 DL-SCH data transfer

5.3.1 DL Assignment reception

Downlink assignments transmitted on the PDCCH indicate if there is a transmission on a DL-SCH for a particular MAC entity and provide the relevant HARQ information.

When the MAC entity has a C-RNTI, Semi-Persistent Scheduling C-RNTI, or Temporary C-RNTI, the MAC entity shall for each TTI during which it monitors PDCCH and for each Serving Cell:

- if a downlink assignment for this TTI and this Serving Cell has been received on the PDCCH for the MAC entity's C-RNTI, or Temporary C-RNTI:
  - if this is the first downlink assignment for this Temporary C-RNTI:
    - consider the NDI to have been toggled.
  - if the downlink assignment is for the MAC entity's C-RNTI and if the previous downlink assignment indicated to the HARQ entity of the same HARQ process was either a downlink assignment received for the MAC entity's Semi-Persistent Scheduling C-RNTI or a configured downlink assignment:
    - consider the NDI to have been toggled regardless of the value of the NDI.
  - indicate the presence of a downlink assignment and deliver the associated HARQ information to the HARQ entity for this TTI.
- else, if this Serving Cell is the SpCell and a downlink assignment for this TTI has been received for the SpCell on the PDCCH of the SpCell for the MAC entity's Semi-Persistent Scheduling C-RNTI:
  - if the NDI in the received HARQ information is 1:
    - consider the NDI not to have been toggled;
    - indicate the presence of a downlink assignment and deliver the associated HARQ information to the HARQ entity for this TTI.
  - else, if the NDI in the received HARQ information is 0:
    - if PDCCH contents indicate SPS release:
      - clear the configured downlink assignment (if any);
      - if the *timeAlignmentTimer* associated with the pTAG is running:
        - indicate a positive acknowledgement for the downlink SPS release to the physical layer.
    - else:
      - store the downlink assignment and the associated HARQ information as configured downlink assignment;
      - initialise (if not active) or re-initialise (if already active) the configured downlink assignment to start in this TTI and to recur according to rules in subclause 5.10.1;
      - set the HARQ Process ID to the HARQ Process ID associated with this TTI;
      - consider the NDI bit to have been toggled;
      - indicate the presence of a configured downlink assignment and deliver the stored HARQ information to the HARQ entity for this TTI.
- else, if this Serving Cell is the SpCell and a downlink assignment for this TTI has been configured for the SpCell and there is no measurement gap in this TTI and there is no Sidelink Discovery Gap for Reception in this TTI; and

ASUS EX2033
Samsung v. ASUS
IPR2024-00614

- if this TTI is not an MBSFN subframe of the SpCell or the MAC entity is configured with transmission mode *tm9* or *tm10* on the SpCell:
  - instruct the physical layer to receive, in this TTI, transport block on the DL-SCH according to the configured downlink assignment and to deliver it to the HARQ entity;
  - set the HARQ Process ID to the HARQ Process ID associated with this TTI;
  - consider the NDI bit to have been toggled;
  - indicate the presence of a configured downlink assignment and deliver the stored HARQ information to the HARQ entity for this TTI.

For configured downlink assignments, the HARQ Process ID associated with this TTI is derived from the following equation:

HARQ Process ID = [floor(CURRENT_TTI/*semiPersistSchedIntervalDL*)] modulo *numberOfConfSPS-Processes*,

where CURRENT_TTI=[(SFN * 10) + subframe number].

For BL UEs or UEs in enhanced coverage, CURRENT_TTI refers to the TTI where first transmission of repetition bundle takes place.

When the MAC entity needs to read BCCH or BR-BCCH, the MAC entity may, based on the scheduling information from RRC:

- if the UE is a BL UE or a UE in enhanced coverage:
  - the redundancy version of the received downlink assignment for this TTI is determined by RV_K = ceiling(3/2*k) modulo 4, where k depends on the type of system information message.
    - for *SystemInformationBlockType1-BR*
      - if number of repetitions for PDSCH carrying *SystemInformationBlockType1-BR* is 4, k = floor(SFN/2) modulo 4, where SFN is the system frame number.
      - else if number of repetitions for PDSCH carrying *SystemInformationBlockType1-BR* is 8, k = SFN modulo 4, where SFN is the system frame number.
      - else if number of repetitions for PDSCH carrying *SystemInformationBlockType1-BR* is 16, k = (SFN*10+i) modulo 4, where SFN is the system frame number, and i denotes the subframe within the SFN.

NOTE: the set of subframes for *SystemInformationBlockType1-BR* when number of repetitions for PDSCH is 16 are given by Table 6.4.1-2 in [7].

    - for *SystemInformation-BR* messages, k=i modulo 4, i =0,1,…, n_s^w–1, where i denotes the subframe number within the SI window n_s^w;
  - indicate a downlink assignment and redundancy version for the dedicated broadcast HARQ process to the HARQ entity for this TTI.
- else if a downlink assignment for this TTI has been received on the PDCCH for the SI-RNTI, except for NB-IoT;
  - if the redundancy version is not defined in the PDCCH format:
    - the redundancy version of the received downlink assignment for this TTI is determined by RV_K = ceiling(3/2*k) modulo 4, where k depends on the type of system information message: for *SystemInformationBlockType1* message, k = (SFN/2) modulo 4, where SFN is the system frame number; for *SystemInformation* messages, k=i modulo 4, i =0,1,…, n_s^w–1, where i denotes the subframe number within the SI window n_s^w;
  - indicate a downlink assignment and redundancy version for the dedicated broadcast HARQ process to the HARQ entity for this TTI.

ASUS EX2033
Samsung v. ASUS
IPR2024-00614

When the MAC entity has SC-RNTI and/or G-RNTI, the MAC entity shall for each TTI during which it monitors PDCCH for SC-RNTI as specified in [8] and for G-RNTI as specified in subclause 5.7a and for each Serving Cell:

- if a downlink assignment for this TTI and this Serving Cell has been received on the PDCCH for the MAC entity's SC-RNTI or G-RNTI:
  - attempt to decode the received data.
- if the data which the MAC entity attempted to decode was successfully decoded for this TB:
  - deliver the decoded MAC PDU to the disassembly and demultiplexing entity.

5.3.2 HARQ operation

5.3.2.1 HARQ Entity

There is one HARQ entity at the MAC entity for each Serving Cell which maintains a number of parallel HARQ processes. Each HARQ process is associated with a HARQ process identifier. The HARQ entity directs HARQ information and associated TBs received on the DL-SCH to the corresponding HARQ processes (see subclause 5.3.2.2).

The number of DL HARQ processes per HARQ entity is specified in [2], clause 7.

When the physical layer is configured for downlink spatial multiplexing [2], one or two TBs are expected per TTI and they are associated with the same HARQ process. Otherwise, one TB is expected per TTI.

For NB-IoT UEs or BL UEs or UEs in enhanced coverage, the parameter DL_REPETITION_NUMBER provides the number of transmissions repeated in a bundle. For each bundle, DL_REPETITION_NUMBER is set to a value provided by lower layers. Within a bundle, after the initial (re)transmission, DL_REPETITION_NUMBER-1 HARQ retransmissions follow. The HARQ feedback is transmitted for the bundle and a downlink assignment corresponding to a new transmission or a retransmission of the bundle is received after the last repetition of the bundle. A retransmission of a bundle is also a bundle.

In addition to the broadcast HARQ process, NB-IoT has one DL HARQ process.

The MAC entity shall:

- If a downlink assignment has been indicated for this TTI; or
- If this TTI is for a retransmission within a bundle:
  - allocate the TB(s) received from the physical layer and the associated HARQ information to the HARQ process indicated by the associated HARQ information.
- If a downlink assignment has been indicated for the broadcast HARQ process:
  - allocate the received TB to the broadcast HARQ process.

NOTE: In case of BCCH and BR-BCCH a dedicated broadcast HARQ process is used.

5.3.2.2 HARQ process

For each TTI where a transmission takes place for the HARQ process, one or two (in case of downlink spatial multiplexing) TBs and the associated HARQ information are received from the HARQ entity.

For each received TB and associated HARQ information, the HARQ process shall:

- if the NDI, when provided, has been toggled compared to the value of the previous received transmission corresponding to this TB; or
- if the HARQ process is equal to the broadcast process and if this is the first received transmission for the TB according to the system information schedule indicated by RRC; or
- if this is the very first received transmission for this TB (i.e. there is no previous NDI for this TB):
  - consider this transmission to be a new transmission.

ASUS EX2033
Samsung v. ASUS
IPR2024-00614

- else:
  - consider this transmission to be a retransmission.

The MAC entity then shall:

- if this is a new transmission:
  - attempt to decode the received data.
- else if this is a retransmission:
  - if the data for this TB has not yet been successfully decoded:
    - combine the received data with the data currently in the soft buffer for this TB and attempt to decode the combined data.
- if the data which the MAC entity attempted to decode was successfully decoded for this TB; or
- if the data for this TB was successfully decoded before:
  - if the HARQ process is equal to the broadcast process:
    - deliver the decoded MAC PDU to upper layers.
  - else if this is the first successful decoding of the data for this TB:
    - deliver the decoded MAC PDU to the disassembly and demultiplexing entity.
  - generate a positive acknowledgement (ACK) of the data in this TB.
- else:
  - replace the data in the soft buffer for this TB with the data which the MAC entity attempted to decode.
  - generate a negative acknowledgement (NACK) of the data in this TB.
- if the HARQ process is associated with a transmission indicated with a Temporary C-RNTI and the Contention Resolution is not yet successful (see subclause 5.1.5); or
- if the HARQ process is equal to the broadcast process; or
- if the *timeAlignmentTimer*, associated with the TAG containing the serving cell on which the HARQ feedback is to be transmitted, is stopped or expired:
  - do not indicate the generated positive or negative acknowledgement to the physical layer.
- else:
  - indicate the generated positive or negative acknowledgement for this TB to the physical layer.

The MAC entity shall ignore NDI received in all downlink assignments on PDCCH for its Temporary C-RNTI when determining if NDI on PDCCH for its C-RNTI has been toggled compared to the value in the previous transmission.

NOTE: When the MAC entity is configured with more than one serving cell, UE behaviors for storing data to the soft buffer is specified in [2].

NOTE: If the MAC entity receives a retransmission with a TB size different from the last valid TB size signalled for this TB, the UE behavior is left up to UE implementation.

5.3.3 Disassembly and demultiplexing

The MAC entity shall disassemble and demultiplex a MAC PDU as defined in subclause 6.1.2.

ASUS EX2033
Samsung v. ASUS
IPR2024-00614

5.4 UL-SCH data transfer

5.4.1 UL Grant reception

In order to transmit on the UL-SCH the MAC entity must have a valid uplink grant (except for non-adaptive HARQ retransmissions) which it may receive dynamically on the PDCCH or in a Random Access Response or which may be configured semi-persistently. To perform requested transmissions, the MAC layer receives HARQ information from lower layers. When the physical layer is configured for uplink spatial multiplexing, the MAC layer can receive up to two grants (one per HARQ process) for the same TTI from lower layers.

If the MAC entity has a C-RNTI, a Semi-Persistent Scheduling C-RNTI, or a Temporary C-RNTI, the MAC entity shall for each TTI and for each Serving Cell belonging to a TAG that has a running *timeAlignmentTimer* and for each grant received for this TTI:

- if an uplink grant for this TTI and this Serving Cell has been received on the PDCCH for the MAC entity's C-RNTI or Temporary C-RNTI; or
- if an uplink grant for this TTI has been received in a Random Access Response:
  - if the uplink grant is for MAC entity's C-RNTI and if the previous uplink grant delivered to the HARQ entity for the same HARQ process was either an uplink grant received for the MAC entity's Semi-Persistent Scheduling C-RNTI or a configured uplink grant:
    - consider the NDI to have been toggled for the corresponding HARQ process regardless of the value of the NDI.
  - deliver the uplink grant and the associated HARQ information to the HARQ entity for this TTI.
- else, if this Serving Cell is the SpCell and if an uplink grant for this TTI has been received for the SpCell on the PDCCH of the SpCell for the MAC entity's Semi-Persistent Scheduling C-RNTI:
  - if the NDI in the received HARQ information is 1:
    - consider the NDI for the corresponding HARQ process not to have been toggled;
    - deliver the uplink grant and the associated HARQ information to the HARQ entity for this TTI.
  - else if the NDI in the received HARQ information is 0:
    - if PDCCH contents indicate SPS release:
      - if the MAC entity is configured with *skipUplinkTxSPS*:
        - trigger an SPS confirmation;
        - if an uplink grant for this TTI has been configured:
          - consider the NDI bit for the corresponding HARQ process to have been toggled;
          - deliver the configured uplink grant and the associated HARQ information to the HARQ entity for this TTI;
      - else:
        - clear the configured uplink grant (if any).
    - else:
      - if the MAC entity is configured with *skipUplinkTxSPS*:
        - trigger an SPS confirmation;
      - store the uplink grant and the associated HARQ information as configured uplink grant;
      - initialise (if not active) or re-initialise (if already active) the configured uplink grant to start in this TTI and to recur according to rules in subclause 5.10.2;

ASUS EX2033
Samsung v. ASUS
IPR2024-00614

- if UL HARQ operation is asynchronous, set the HARQ Process ID to the HARQ Process ID associated with this TTI;
- consider the NDI bit for the corresponding HARQ process to have been toggled;
- deliver the configured uplink grant and the associated HARQ information to the HARQ entity for this TTI.

- else, if this Serving Cell is the SpCell and an uplink grant for this TTI has been configured for the SpCell:
  - if UL HARQ operation is asynchronous, set the HARQ Process ID to the HARQ Process ID associated with this TTI;
  - consider the NDI bit for the corresponding HARQ process to have been toggled;
  - deliver the configured uplink grant, and the associated HARQ information to the HARQ entity for this TTI.

NOTE: The period of configured uplink grants is expressed in TTIs.

NOTE: If the MAC entity receives both a grant in a Random Access Response and a grant for its C-RNTI or Semi persistent scheduling C-RNTI requiring transmissions on the SpCell in the same UL subframe, the MAC entity may choose to continue with either the grant for its RA-RNTI or the grant for its C-RNTI or Semi persistent scheduling C-RNTI.

NOTE: When a configured uplink grant is indicated during a measurement gap and indicates an UL-SCH transmission during a measurement gap, the MAC entity processes the grant but does not transmit on UL-SCH. When a configured uplink grant is indicated during a Sidelink Discovery gap for reception and indicates an UL-SCH transmission during a Sidelink Discovery gap for transmission with a SL-DCH transmission, the MAC entity processes the grant but does not transmit on UL-SCH.

For configured uplink grants, the HARQ Process ID associated with this TTI is derived from the following equation for asynchronous UL HARQ operation:

HARQ Process ID = [floor(CURRENT_TTI/*semiPersistSchedIntervalUL*)] modulo *numberOfConfUlSPS-Processes*,

where CURRENT_TTI=[(SFN * 10) + subframe number] and it refers to the subframe where the first transmission of a bundle takes place.

5.4.2 HARQ operation

5.4.2.1 HARQ entity

There is one HARQ entity at the MAC entity for each Serving Cell with configured uplink, which maintains a number of parallel HARQ processes allowing transmissions to take place continuously while waiting for the HARQ feedback on the successful or unsuccessful reception of previous transmissions.

The number of parallel HARQ processes per HARQ entity is specified in [2], clause 8. NB-IoT has one UL HARQ process.

When the physical layer is configured for uplink spatial multiplexing [2], there are two HARQ processes associated with a given TTI. Otherwise there is one HARQ process associated with a given TTI.

At a given TTI, if an uplink grant is indicated for the TTI, the HARQ entity identifies the HARQ process(es) for which a transmission should take place. It also routes the received HARQ feedback (ACK/NACK information), MCS and resource, relayed by the physical layer, to the appropriate HARQ process(es).

In asynchronous HARQ operation, a HARQ process is associated with a TTI based on the received UL grant except for UL grant in RAR. Except for NB-IoT, each asynchronous HARQ process is associated with a HARQ process identifier. For UL transmission with UL grant in RAR, HARQ process identifier 0 is used. HARQ feedback is not applicable for asynchronous UL HARQ.

When TTI bundling is configured, the parameter TTI_BUNDLE_SIZE provides the number of TTIs of a TTI bundle. TTI bundling operation relies on the HARQ entity for invoking the same HARQ process for each transmission that is part of the same bundle. Within a bundle HARQ retransmissions are non-adaptive and triggered without waiting for

ASUS EX2033
Samsung v. ASUS
IPR2024-00614

feedback from previous transmissions according to TTI_BUNDLE_SIZE. The HARQ feedback of a bundle is only received for the last TTI of the bundle (i.e the TTI corresponding to TTI_BUNDLE_SIZE), regardless of whether a transmission in that TTI takes place or not (e.g. when a measurement gap occurs). A retransmission of a TTI bundle is also a TTI bundle. TTI bundling is not supported when the MAC entity is configured with one or more SCells with configured uplink.

Uplink HARQ operation is asynchronous for serving cells operating according to Frame Structure Type 3, NB-IoT UEs, BL UEs or UEs in enhanced coverage except for the repetitions within a bundle.

For NB-IoT UEs, BL UEs or UEs in enhanced coverage, the parameter UL_REPETITION_NUMBER provides the number of transmission repetitions within a bundle. For each bundle, UL_REPETITION_NUMBER is set to a value provided by lower layers. Bundling operation relies on the HARQ entity for invoking the same HARQ process for each transmission that is part of the same bundle. Within a bundle HARQ retransmissions are non-adaptive and are triggered without waiting for feedback from previous transmissions according to UL_REPETITION_NUMBER. An uplink grant corresponding to a new transmission or a retransmission of the bundle is only received after the last repetition of the bundle. A retransmission of a bundle is also a bundle.

TTI bundling is not supported for RN communication with the E-UTRAN in combination with an RN subframe configuration.

For transmission of Msg3 during Random Access (see subclause 5.1.5) TTI bundling does not apply. For NB-IoT UEs, BL UEs or UEs in enhanced coverage, uplink repetition bundling is used for transmission of Msg3.

For each TTI, the HARQ entity shall:

- identify the HARQ process(es) associated with this TTI, and for each identified HARQ process:
  - if an uplink grant has been indicated for this process and this TTI:
    - if the received grant was not addressed to a Temporary C-RNTI on PDCCH and if the NDI provided in the associated HARQ information has been toggled compared to the value in the previous transmission of this HARQ process; or
    - if the uplink grant was received on PDCCH for the C-RNTI and the HARQ buffer of the identified process is empty; or
    - if the uplink grant was received in a Random Access Response:
      - if there is a MAC PDU in the Msg3 buffer and the uplink grant was received in a Random Access Response:
        - obtain the MAC PDU to transmit from the Msg3 buffer.
      - else if the MAC entity is configured with *semiPersistSchedIntervalUL* shorter than 10 subframes and if the uplink grant is a configured grant, and if the HARQ buffer of the identified HARQ process is not empty, and if HARQ_FEEDBACK of the identified HARQ process is NACK:
        - instruct the identified HARQ process to generate a non-adaptive retransmission.
      - else:
        - obtain the MAC PDU to transmit from the "Multiplexing and assembly" entity, if any;
        - if a MAC PDU to transmit has been obtained:
          - deliver the MAC PDU and the uplink grant and the HARQ information to the identified HARQ process;
          - instruct the identified HARQ process to trigger a new transmission.
    - else:
      - deliver the uplink grant and the HARQ information (redundancy version) to the identified HARQ process;
      - instruct the identified HARQ process to generate an adaptive retransmission.

ASUS EX2033
Samsung v. ASUS
IPR2024-00614

- else, if the HARQ buffer of this HARQ process is not empty:
  - instruct the identified HARQ process to generate a non-adaptive retransmission.

When determining if NDI has been toggled compared to the value in the previous transmission the MAC entity shall ignore NDI received in all uplink grants on PDCCH for its Temporary C-RNTI.

5.4.2.2 HARQ process

Each HARQ process is associated with a HARQ buffer.

For synchronous HARQ, each HARQ process shall maintain a state variable CURRENT_TX_NB, which indicates the number of transmissions that have taken place for the MAC PDU currently in the buffer, and a state variable HARQ_FEEDBACK, which indicates the HARQ feedback for the MAC PDU currently in the buffer. When the HARQ process is established, CURRENT_TX_NB shall be initialized to 0.

The sequence of redundancy versions is 0, 2, 3, 1. The variable CURRENT_IRV is an index into the sequence of redundancy versions. This variable is up-dated modulo 4. For BL UEs or UEs in enhanced coverage see subclause 8.6.1 in [2] for the sequence of redundancy versions and redundancy version determination. For NB-IoT UEs see subclause 16.5.1.2 in [2] for the sequence of redundancy versions and redundancy version determination.

For NB-IoT UEs, BL UEs or UEs in enhanced coverage for UL_REPETITION_NUMBER for Mode B operation, the same redundancy version is used multiple times before cycling to the next redundancy version as specified in Subclause 16.5.1.2, 8.6.1 and 7.1.7.1 in [2].

New transmissions are performed on the resource and with the MCS indicated on PDCCH or Random Access Response. Adaptive retransmissions are performed on the resource and, if provided, with the MCS indicated on PDCCH. Non-adaptive retransmission is performed on the same resource and with the same MCS as was used for the last made transmission attempt.

For synchronous HARQ, the MAC entity is configured with a maximum number of HARQ transmissions and a maximum number of Msg3 HARQ transmissions by RRC: *maxHARQ-Tx* and *maxHARQ-Msg3Tx* respectively. For transmissions on all HARQ processes and all logical channels except for transmission of a MAC PDU stored in the Msg3 buffer, the maximum number of transmissions shall be set to *maxHARQ-Tx*. For transmission of a MAC PDU stored in the Msg3 buffer, the maximum number of transmissions shall be set to *maxHARQ-Msg3Tx*.

When the HARQ feedback is received for this TB, the HARQ process shall:

- set HARQ_FEEDBACK to the received value.

If the HARQ entity requests a new transmission, the HARQ process shall:

- if UL HARQ operation is synchronous:
  - set CURRENT_TX_NB to 0;
  - set HARQ_FEEDBACK to NACK;
  - set CURRENT_IRV to 0;
- else:
  - set CURRENT_IRV to the index corresponding to the redundancy version value provided in the HARQ information, except for BL UEs and for UEs in enhanced coverage and for NB-IoT UEs (as described above);
- store the MAC PDU in the associated HARQ buffer;
- store the uplink grant received from the HARQ entity;
- generate a transmission as described below.

ASUS EX2033
Samsung v. ASUS
IPR2024-00614

If the HARQ entity requests a retransmission, the HARQ process shall:

- if UL HARQ operation is synchronous:
  - increment CURRENT_TX_NB by 1;
- if the HARQ entity requests an adaptive retransmission:
  - store the uplink grant received from the HARQ entity;
  - set CURRENT_IRV to the index corresponding to the redundancy version value provided in the HARQ information;
  - if UL HARQ operation is synchronous:
    - set HARQ_FEEDBACK to NACK;
  - generate a transmission as described below.
- else if the HARQ entity requests a non-adaptive retransmission:
  - if UL HARQ operation is asynchronous or HARQ_FEEDBACK = NACK:
    - generate a transmission as described below.

NOTE: When receiving a HARQ ACK alone, the MAC entity keeps the data in the HARQ buffer.

NOTE: When no UL-SCH transmission can be made due to the occurrence of a measurement gap or a Sidelink Discovery Gap for Transmission, no HARQ feedback can be received and a non-adaptive retransmission follows.

NOTE: For asynchronous HARQ operation, UL retransmissions are triggered only by adaptive retransmission grants, except for retransmissions within a bundle.

To generate a transmission, the HARQ process shall:

- if the MAC PDU was obtained from the Msg3 buffer; or
- if Sidelink Discovery Gaps for Transmission are not configured by upper layers, and there is no measurement gap at the time of the transmission and, in case of retransmission, the retransmission does not collide with a transmission for a MAC PDU obtained from the Msg3 buffer in this TTI; or
- if Sidelink Discovery Gaps for Transmission are configured by upper layers, and there is no measurement gap at the time of the transmission and, in case of retransmission, the retransmission does not collide with a transmission for a MAC PDU obtained from the Msg3 buffer, and there is no Sidelink Discovery Gap for Transmission in this TTI; or
- if Sidelink Discovery Gaps for Transmission are configured by upper layers, and there is no measurement gap at the time of the transmission and, in case of retransmission, the retransmission does not collide with a transmission for a MAC PDU obtained from the Msg3 buffer, and there is a Sidelink Discovery Gap for Transmission, and there is no configured grant for transmission on SL-DCH in this TTI:
  - instruct the physical layer to generate a transmission according to the stored uplink grant with the redundancy version corresponding to the CURRENT_IRV value;
  - increment CURRENT_IRV by 1;
  - if UL HARQ operation is synchronous and there is a measurement gap or Sidelink Discovery Gap for Reception at the time of the HARQ feedback reception for this transmission and if the MAC PDU was not obtained from the Msg3 buffer:
    - set HARQ_FEEDBACK to ACK at the time of the HARQ feedback reception for this transmission.

ASUS EX2033
Samsung v. ASUS
IPR2024-00614

After performing above actions, if UL HARQ operation is synchronous the HARQ process then shall:

- if CURRENT_TX_NB = maximum number of transmissions – 1:
  - flush the HARQ buffer;

5.4.3 Multiplexing and assembly

5.4.3.1 Logical channel prioritization

The Logical Channel Prioritization procedure is applied when a new transmission is performed.

RRC controls the scheduling of uplink data by signalling for each logical channel: *priority* where an increasing *priority* value indicates a lower priority level, *prioritisedBitRate* which sets the Prioritized Bit Rate (PBR), *bucketSizeDuration* which sets the Bucket Size Duration (BSD). For NB-IoT, *prioritisedBitRate*, *bucketSizeDuration* and the corresponding steps of the Logical Channel Prioritisation procedure (i.e., Step 1 and Step 2 below) are not applicable.

The MAC entity shall maintain a variable Bj for each logical channel j. Bj shall be initialized to zero when the related logical channel is established, and incremented by the product PBR × TTI duration for each TTI, where PBR is Prioritized Bit Rate of logical channel j. However, the value of Bj can never exceed the bucket size and if the value of Bj is larger than the bucket size of logical channel j, it shall be set to the bucket size. The bucket size of a logical channel is equal to PBR × BSD, where PBR and BSD are configured by upper layers.

The MAC entity shall perform the following Logical Channel Prioritization procedure when a new transmission is performed:

- The MAC entity shall allocate resources to the logical channels in the following steps:
  - Step 1: All the logical channels with Bj > 0 are allocated resources in a decreasing priority order. If the PBR of a logical channel is set to “infinity”, the MAC entity shall allocate resources for all the data that is available for transmission on the logical channel before meeting the PBR of the lower priority logical channel(s);
  - Step 2: the MAC entity shall decrement Bj by the total size of MAC SDUs served to logical channel j in Step 1;

NOTE: The value of Bj can be negative.

  - Step 3: if any resources remain, all the logical channels are served in a strict decreasing priority order (regardless of the value of Bj) until either the data for that logical channel or the UL grant is exhausted, whichever comes first. Logical channels configured with equal priority should be served equally.
- The UE shall also follow the rules below during the scheduling procedures above:
  - the UE should not segment an RLC SDU (or partially transmitted SDU or retransmitted RLC PDU) if the whole SDU (or partially transmitted SDU or retransmitted RLC PDU) fits into the remaining resources of the associated MAC entity;
  - if the UE segments an RLC SDU from the logical channel, it shall maximize the size of the segment to fill the grant of the associated MAC entity as much as possible;
  - the UE should maximise the transmission of data.
  - if the MAC entity is given an UL grant size that is equal to or larger than 4 bytes while having data available for transmission, the MAC entity shall not transmit only padding BSR and/or padding (unless the UL grant size is less than 7 bytes and an AMD PDU segment needs to be transmitted);
  - for transmissions on serving cells operating according to Frame Structure Type 3, the MAC entity shall only consider logical channels for which *laa-Allowed* has been configured.

ASUS EX2033
Samsung v. ASUS
IPR2024-00614

The MAC entity shall not transmit data for a logical channel corresponding to a radio bearer that is suspended (the conditions for when a radio bearer is considered suspended are defined in [8]).

If the MAC PDU includes only the MAC CE for padding BSR or periodic BSR with zero MAC SDUs and there is no aperiodic CSI requested for this TTI [2], the MAC entity shall not generate a MAC PDU for the HARQ entity in the following cases:

- in case the MAC entity is configured with *skipUplinkTxDynamic* and the grant indicated to the HARQ entity was addressed to a C-RNTI; or
- in case the MAC entity is configured with *skipUplinkTxSPS* and the grant indicated to the HARQ entity is a configured uplink grant;

For the Logical Channel Prioritization procedure, the MAC entity shall take into account the following relative priority in decreasing order:

- MAC control element for C-RNTI or data from UL-CCCH;
- MAC control element for SPS confirmation;
- MAC control element for BSR, with exception of BSR included for padding;
- MAC control element for PHR, Extended PHR, or Dual Connectivity PHR;
- MAC control element for Sidelink BSR, with exception of Sidelink BSR included for padding;
- data from any Logical Channel, except data from UL-CCCH;
- MAC control element for BSR included for padding;
- MAC control element for Sidelink BSR included for padding.

NOTE: When the MAC entity is requested to transmit multiple MAC PDUs in one TTI, steps 1 to 3 and the associated rules may be applied either to each grant independently or to the sum of the capacities of the grants. Also the order in which the grants are processed is left up to UE implementation. It is up to the UE implementation to decide in which MAC PDU a MAC control element is included when MAC entity is requested to transmit multiple MAC PDUs in one TTI. When the UE is requested to generate MAC PDU(s) in two MAC entities in one TTI, it is up to UE implementation in which order the grants are processed.

5.4.3.2 Multiplexing of MAC Control Elements and MAC SDUs

The MAC entity shall multiplex MAC control elements and MAC SDUs in a MAC PDU according to subclauses 5.4.3.1 and 6.1.2.

5.4.4 Scheduling Request

The Scheduling Request (SR) is used for requesting UL-SCH resources for new transmission.

When an SR is triggered, it shall be considered as pending until it is cancelled. All pending SR(s) shall be cancelled and *sr-ProhibitTimer* shall be stopped when a MAC PDU is assembled and this PDU includes a BSR which contains buffer status up to (and including) the last event that triggered a BSR (see subclause 5.4.5), or, if all pending SR(s) are triggered by Sidelink BSR, when a MAC PDU is assembled and this PDU includes a Sidelink BSR which contains buffer status up to (and including) the last event that triggered a Sidelink BSR (see subclause 5.14.1.4), or, if all pending SR(s) are triggered by Sidelink BSR, when upper layers configure autonomous resource selection, or when the UL grant(s) can accommodate all pending data available for transmission.

If an SR is triggered and there is no other SR pending, the MAC entity shall set the SR_COUNTER to 0.

As long as one SR is pending, the MAC entity shall for each TTI:

- if no UL-SCH resources are available for a transmission in this TTI:
  - if the MAC entity has no valid PUCCH resource for SR configured in any TTI: initiate a Random Access procedure (see subclause 5.1) on the SpCell and cancel all pending SRs;

ASUS EX2033
Samsung v. ASUS
IPR2024-00614

- else if the MAC entity has at least one valid PUCCH resource for SR configured for this TTI and if this TTI is not part of a measurement gap or Sidelink Discovery Gap for Transmission and if *sr-ProhibitTimer* is not running:
  - if SR_COUNTER < *dsr-TransMax*:
    - increment SR_COUNTER by 1;
    - instruct the physical layer to signal the SR on one valid PUCCH resource for SR;
    - start the *sr-ProhibitTimer*.
  - else:
    - notify RRC to release PUCCH for all serving cells;
    - notify RRC to release SRS for all serving cells;
    - clear any configured downlink assignments and uplink grants;
    - initiate a Random Access procedure (see subclause 5.1) on the SpCell and cancel all pending SRs.

NOTE: The selection of which valid PUCCH resource for SR to signal SR on when the MAC entity has more than one valid PUCCH resource for SR in one TTI is left to UE implementation.

NOTE: SR_COUNTER is incremented for each SR bundle. *sr-ProhibitTimer* is started in the first TTI of an SR bundle.

5.4.5 Buffer Status Reporting

The Buffer Status reporting procedure is used to provide the serving eNB with information about the amount of data available for transmission in the UL buffers associated with the MAC entity. RRC controls BSR reporting by configuring the three timers *periodicBSR-Timer*, *retxBSR-Timer* and *logicalChannelSR-ProhibitTimer* and by, for each logical channel, optionally signalling *logicalChannelGroup* which allocates the logical channel to an LCG [8].

For the Buffer Status reporting procedure, the MAC entity shall consider all radio bearers which are not suspended and may consider radio bearers which are suspended.

For NB-IoT the Long BSR is not supported and all logical channels belong to one LCG.

A Buffer Status Report (BSR) shall be triggered if any of the following events occur:

- UL data, for a logical channel which belongs to a LCG, becomes available for transmission in the RLC entity or in the PDCP entity (the definition of what data shall be considered as available for transmission is specified in [3] and [4] respectively) and either the data belongs to a logical channel with higher priority than the priorities of the logical channels which belong to any LCG and for which data is already available for transmission, or there is no data available for transmission for any of the logical channels which belong to a LCG, in which case the BSR is referred below to as "Regular BSR";
- UL resources are allocated and number of padding bits is equal to or larger than the size of the Buffer Status Report MAC control element plus its subheader, in which case the BSR is referred below to as "Padding BSR";
- *retxBSR-Timer* expires and the MAC entity has data available for transmission for any of the logical channels which belong to a LCG, in which case the BSR is referred below to as "Regular BSR";
- *periodicBSR-Timer* expires, in which case the BSR is referred below to as "Periodic BSR".

For Regular BSR:

- if the BSR is triggered due to data becoming available for transmission for a logical channel for which *logicalChannelSR-ProhibitTimer* is configured by upper layers:
  - start or restart the *logicalChannelSR-ProhibitTimer*;
- else:

ASUS EX2033
Samsung v. ASUS
IPR2024-00614

- if running, stop the *logicalChannelSR-ProhibitTimer*.

For Regular and Periodic BSR:

- if more than one LCG has data available for transmission in the TTI where the BSR is transmitted: report Long BSR;
- else report Short BSR.

For Padding BSR:

- if the number of padding bits is equal to or larger than the size of the Short BSR plus its subheader but smaller than the size of the Long BSR plus its subheader:
  - if more than one LCG has data available for transmission in the TTI where the BSR is transmitted: report Truncated BSR of the LCG with the highest priority logical channel with data available for transmission;
  - else report Short BSR.
- else if the number of padding bits is equal to or larger than the size of the Long BSR plus its subheader, report Long BSR.

If the Buffer Status reporting procedure determines that at least one BSR has been triggered and not cancelled:

- if the MAC entity has UL resources allocated for new transmission for this TTI:
  - instruct the Multiplexing and Assembly procedure to generate the BSR MAC control element(s);
  - start or restart *periodicBSR-Timer* except when all the generated BSRs are Truncated BSRs;
  - start or restart *retxBSR-Timer*.
- else if a Regular BSR has been triggered and *logicalChannelSR-ProhibitTimer* is not running:
  - if an uplink grant is not configured or the Regular BSR was not triggered due to data becoming available for transmission for a logical channel for which logical channel SR masking (*logicalChannelSR-Mask*) is setup by upper layers:
    - a Scheduling Request shall be triggered.

A MAC PDU shall contain at most one MAC BSR control element, even when multiple events trigger a BSR by the time a BSR can be transmitted in which case the Regular BSR and the Periodic BSR shall have precedence over the padding BSR.

The MAC entity shall restart *retxBSR-Timer* upon indication of a grant for transmission of new data on any UL-SCH.

All triggered BSRs shall be cancelled in case the UL grant(s) in this TTI can accommodate all pending data available for transmission but is not sufficient to additionally accommodate the BSR MAC control element plus its subheader. All triggered BSRs shall be cancelled when a BSR is included in a MAC PDU for transmission.

The MAC entity shall transmit at most one Regular/Periodic BSR in a TTI. If the MAC entity is requested to transmit multiple MAC PDUs in a TTI, it may include a padding BSR in any of the MAC PDUs which do not contain a Regular/Periodic BSR.

All BSRs transmitted in a TTI always reflect the buffer status after all MAC PDUs have been built for this TTI. Each LCG shall report at the most one buffer status value per TTI and this value shall be reported in all BSRs reporting buffer status for this LCG.

NOTE: A Padding BSR is not allowed to cancel a triggered Regular/Periodic BSR, except for NB-IoT. A Padding BSR is triggered for a specific MAC PDU only and the trigger is cancelled when this MAC PDU has been built.

5.4.5a Data Volume and Power Headroom Reporting

The Data Volume and Power Headroom reporting procedure is only applicable for NB-IoT UEs and is used to provide the serving eNB with information about the amount of data available for transmission in the UL buffers associated with

ASUS EX2033
Samsung v. ASUS
IPR2024-00614

the MAC entity, and to provide the serving eNB with information about the difference between the nominal UE maximum transmission power and the estimated transmission power for UL-SCH transmission for the Serving Cell. The reporting is done using the DPR MAC control element, which is sent in Msg3 together with a CCCH SDU.

5.4.6 Power Headroom Reporting

The Power Headroom reporting procedure is used to provide the serving eNB with information about the difference between the nominal UE maximum transmit power and the estimated power for UL-SCH transmission per activated Serving Cell and also with information about the difference between the nominal UE maximum power and the estimated power for UL-SCH and PUCCH transmission on SpCell and PUCCH SCell.

The reporting period, delay and mapping of Power Headroom are defined in subclause 9.1.8 of [9]. RRC controls Power Headroom reporting by configuring the two timers *periodicPHR-Timer* and *prohibitPHR-Timer*, and by signalling *dl-PathlossChange* which sets the change in measured downlink pathloss and the required power backoff due to power management (as allowed by $P\text{-}MPR_c$ [10]) to trigger a PHR [8].

A Power Headroom Report (PHR) shall be triggered if any of the following events occur:

- *prohibitPHR-Timer* expires or has expired and the path loss has changed more than *dl-PathlossChange* dB for at least one activated Serving Cell of any MAC entity which is used as a pathloss reference since the last transmission of a PHR in this MAC entity when the MAC entity has UL resources for new transmission;
- *periodicPHR-Timer* expires;
- upon configuration or reconfiguration of the power headroom reporting functionality by upper layers [8], which is not used to disable the function;
- activation of an SCell of any MAC entity with configured uplink;
- addition of the PSCell;
- *prohibitPHR-Timer* expires or has expired, when the MAC entity has UL resources for new transmission, and the following is true in this TTI for any of the activated Serving Cells of any MAC entity with configured uplink:
  - there are UL resources allocated for transmission or there is a PUCCH transmission on this cell, and the required power backoff due to power management (as allowed by $P\text{-}MPR_c$ [10]) for this cell has changed more than *dl-PathlossChange* dB since the last transmission of a PHR when the MAC entity had UL resources allocated for transmission or PUCCH transmission on this cell.

NOTE: The MAC entity should avoid triggering a PHR when the required power backoff due to power management decreases only temporarily (e.g. for up to a few tens of milliseconds) and it should avoid reflecting such temporary decrease in the values of $P_{CMAX,c}$/PH when a PHR is triggered by other triggering conditions.

If the MAC entity has UL resources allocated for new transmission for this TTI the MAC entity shall:

- if it is the first UL resource allocated for a new transmission since the last MAC reset, start *periodicPHR-Timer*;
- if the Power Headroom reporting procedure determines that at least one PHR has been triggered and not cancelled, and;
- if the allocated UL resources can accommodate the MAC control element for PHR which the MAC entity is configured to transmit, plus its subheader, as a result of logical channel prioritization:
  - if *extendedPHR* is configured:
    - for each activated Serving Cell with configured uplink:
      - obtain the value of the Type 1 power headroom;
      - if the MAC entity has UL resources allocated for transmission on this Serving Cell for this TTI:
        - obtain the value for the corresponding $P_{CMAX,c}$ field from the physical layer;
  - if *simultaneousPUCCH-PUSCH* is configured:

ASUS EX2033
Samsung v. ASUS
IPR2024-00614

    - obtain the value of the Type 2 power headroom for the PCell;
    - obtain the value for the corresponding $P_{CMAX,c}$ field from the physical layer (see subclause 5.1.1.2 of [2]);
  - instruct the Multiplexing and Assembly procedure to generate and transmit an Extended PHR MAC control element for *extendedPHR* as defined in subclause 6.1.3.6a based on the values reported by the physical layer;
- else if *extendedPHR2* is configured:
  - for each activated Serving Cell with configured uplink:
    - obtain the value of the Type 1 power headroom;
    - if the MAC entity has UL resources allocated for transmission on this Serving Cell for this TTI:
      - obtain the value for the corresponding $P_{CMAX,c}$ field from the physical layer;
  - if a PUCCH SCell is configured and activated:
    - obtain the value of the Type 2 power headroom for the PCell and PUCCH SCell;
    - obtain the values for the corresponding $P_{CMAX,c}$ fields from the physical layer (see subclause 5.1.1.2 of [2]);
  - else:
    - if *simultaneousPUCCH-PUSCH* is configured for the PCell:
      - obtain the value of the Type 2 power headroom for the PCell;
      - obtain the value for the corresponding $P_{CMAX,c}$ field from the physical layer (see subclause 5.1.1.2 of [2]);
  - instruct the Multiplexing and Assembly procedure to generate and transmit an Extended PHR MAC control element for *extendedPHR2* according to configured *ServCellIndex* and the PUCCH(s) for the MAC entity as defined in subclause 6.1.3.6a based on the values reported by the physical layer;
- else if *dualConnectivityPHR* is configured:
  - for each activated Serving Cell with configured uplink associated with any MAC entity:
    - obtain the value of the Type 1 power headroom;
    - if this MAC entity has UL resources allocated for transmission on this Serving Cell for this TTI or if the other MAC entity has UL resources allocated for transmission on this Serving Cell for this TTI and *phr-ModeOtherCG* is set to *real* by upper layers:
      - obtain the value for the corresponding $P_{CMAX,c}$ field from the physical layer;
  - if *simultaneousPUCCH-PUSCH* is configured:
    - obtain the value of the Type 2 power headroom for the SpCell;
    - obtain the value for the corresponding $P_{CMAX,c}$ field for the SpCell from the physical layer (see subclause 5.1.1.2 of [2]);
  - obtain the value of the Type 2 power headroom for the SpCell of the other MAC entity;
  - if *phr-ModeOtherCG* is set to *real* by upper layers:
    - obtain the value for the corresponding $P_{CMAX,c}$ field for the SpCell of the other MAC entity from the physical layer (see subclause 5.1.1.2 of [2]);
  - instruct the Multiplexing and Assembly procedure to generate and transmit a Dual Connectivity PHR MAC control element as defined in subclause 6.1.3.6b based on the values reported by the physical layer;

ASUS EX2033
Samsung v. ASUS
IPR2024-00614

- else:
  - obtain the value of the Type 1 power headroom from the physical layer;
  - instruct the Multiplexing and Assembly procedure to generate and transmit a PHR MAC control element as defined in subclause 6.1.3.6 based on the value reported by the physical layer;
- start or restart *periodicPHR-Timer*;
- start or restart *prohibitPHR-Timer*;
- cancel all triggered PHR(s).

5.5 PCH reception

When the MAC entity needs to receive PCH, the MAC entity shall:

- if a PCH assignment has been received on the PDCCH for the P-RNTI:
  - attempt to decode the TB on the PCH as indicated by the PDCCH information.
- if a TB on the PCH has been successfully decoded:
  - deliver the decoded MAC PDU to upper layers.

5.6 BCH reception

When the MAC entity needs to receive BCH, the MAC entity shall:

- receive and attempt to decode the BCH;
- if a TB on the BCH has been successfully decoded:
  - deliver the decoded MAC PDU to upper layers.

5.7 Discontinuous Reception (DRX)

The MAC entity may be configured by RRC with a DRX functionality that controls the UE's PDCCH monitoring activity for the MAC entity's C-RNTI, TPC-PUCCH-RNTI, TPC-PUSCH-RNTI, Semi-Persistent Scheduling C-RNTI (if configured), eIMTA-RNTI (if configured), SL-RNTI (if configured), and CC-RNTI (if configured). When in RRC_CONNECTED, if DRX is configured, the MAC entity is allowed to monitor the PDCCH discontinuously using the DRX operation specified in this subclause; otherwise the MAC entity monitors the PDCCH continuously. When using DRX operation, the MAC entity shall also monitor PDCCH according to requirements found in other subclauses of this specification. RRC controls DRX operation by configuring the timers *onDurationTimer*, *drx-InactivityTimer*, *drx-RetransmissionTimer* (one per DL HARQ process except for the broadcast process), *drx-ULRetransmissionTimer* (one per asynchronous UL HARQ process), the *longDRX-Cycle*, the value of the *drxStartOffset* and optionally the *drxShortCycleTimer* and *shortDRX-Cycle*. A HARQ RTT timer per DL HARQ process (except for the broadcast process) and UL HARQ RTT Timer per asynchronous UL HARQ process is also defined (see subclause 7.7).

When a DRX cycle is configured, the Active Time includes the time while:

- *onDurationTimer* or *drx-InactivityTimer* or *drx-RetransmissionTimer* or *drx-ULRetransmissionTimer* or *mac-ContentionResolutionTimer* (as described in subclause 5.1.5) is running; or
- a Scheduling Request is sent on PUCCH and is pending (as described in subclause 5.4.4); or
- an uplink grant for a pending HARQ retransmission can occur and there is data in the corresponding HARQ buffer for synchronous HARQ process; or
- a PDCCH indicating a new transmission addressed to the C-RNTI of the MAC entity has not been received after successful reception of a Random Access Response for the preamble not selected by the MAC entity (as described in subclause 5.1.4).

ASUS EX2033
Samsung v. ASUS
IPR2024-00614

When DRX is configured, the MAC entity shall for each subframe:

- if a HARQ RTT Timer expires in this subframe:
  - if the data of the corresponding HARQ process was not successfully decoded:
    - start the *drx-RetransmissionTimer* for the corresponding HARQ process;
  - if NB-IoT, start or restart the *drx-InactivityTimer*.
- if an UL HARQ RTT Timer expires in this subframe:
  - start the *drx-ULRetransmissionTimer* for the corresponding HARQ process.
  - if NB-IoT, start or restart the *drx-InactivityTimer*.
- if a DRX Command MAC control element or a Long DRX Command MAC control element is received:
  - stop *onDurationTimer*;
  - stop *drx-InactivityTimer*.
- if *drx-InactivityTimer* expires or a DRX Command MAC control element is received in this subframe:
  - if the Short DRX cycle is configured:
    - start or restart *drxShortCycleTimer*;
    - use the Short DRX Cycle.
  - else:
    - use the Long DRX cycle.
- if *drxShortCycleTimer* expires in this subframe:
  - use the Long DRX cycle.
- if a Long DRX Command MAC control element is received:
  - stop *drxShortCycleTimer*;
  - use the Long DRX cycle.
- If the Short DRX Cycle is used and [(SFN * 10) + subframe number] modulo (*shortDRX-Cycle*) = (*drxStartOffset*) modulo (*shortDRX-Cycle*); or
- if the Long DRX Cycle is used and [(SFN * 10) + subframe number] modulo (*longDRX-Cycle*) = *drxStartOffset*:
  - if NB-IoT:
    - if neither HARQ RTT Timer nor UL HARQ RTT Timer is running, start *onDurationTimer*.
  - else:
    - start onDurationTimer.
- during the Active Time, for a PDCCH-subframe, if the subframe is not required for uplink transmission for half-duplex FDD UE operation, and if the subframe is not a half-duplex guard subframe [7] and if the subframe is not part of a configured measurement gap and if the subframe is not part of a configured Sidelink Discovery Gap for Reception, and for NB-IoT if the subframe is not required for uplink transmission or downlink reception other than on PDCCH; or
- during the Active Time, for a subframe other than a PDCCH-subframe and for a UE capable of simultaneous reception and transmission in the aggregated cells, if the subframe is a downlink subframe indicated by a valid eIMTA L1 signalling for at least one serving cell not configured with *schedulingCellId* [8] and if the subframe is not part of a configured measurement gap and if the subframe is not part of a configured Sidelink Discovery Gap for Reception; or

ASUS EX2033
Samsung v. ASUS
IPR2024-00614

- during the Active Time, for a subframe other than a PDCCH-subframe and for a UE not capable of simultaneous reception and transmission in the aggregated cells, if the subframe is a downlink subframe indicated by a valid eIMTA L1 signalling for the SpCell and if the subframe is not part of a configured measurement gap and if the subframe is not part of a configured Sidelink Discovery Gap for Reception:
  - monitor the PDCCH;
  - if the PDCCH indicates a DL transmission or if a DL assignment has been configured for this subframe:
    - if the UE is an NB-IoT UE, a BL UE or a UE in enhanced coverage:
      - start the HARQ RTT Timer for the corresponding HARQ process in the subframe containing the last repetition of the corresponding PDSCH reception;
    - else:
      - start the HARQ RTT Timer for the corresponding HARQ process;
    - stop the *drx-RetransmissionTimer* for the corresponding HARQ process.
  - if the PDCCH indicates an UL transmission for an asynchronous HARQ process:
    - start the UL HARQ RTT Timer for the corresponding HARQ process in the subframe containing the last repetition of the corresponding PUSCH transmission;
    - except for NB-IoT, stop the *drx-ULRetransmissionTimer* for the corresponding HARQ process.
  - if the PDCCH indicates a new transmission (DL, UL or SL):
    - except for NB-IoT, start or restart *drx-InactivityTimer*.
  - if the PDCCH indicates a transmission (DL, UL) for a NB-IoT UE:
    - stop *drx-InactivityTimer*, *drx-ULRetransmissionTimer* and *onDurationTimer*.
- in current subframe n, if the MAC entity would not be in Active Time considering grants/assignments/DRX Command MAC control elements/Long DRX Command MAC control elements received and Scheduling Request sent until and including subframe n-5 when evaluating all DRX Active Time conditions as specified in this subclause, type-0-triggered SRS [2] shall not be reported.
- if CQI masking (*cqi-Mask*) is setup by upper layers:
  - in current subframe n, if *onDurationTimer* would not be running considering grants/assignments/DRX Command MAC control elements/Long DRX Command MAC control elements received until and including subframe n-5 when evaluating all DRX Active Time conditions as specified in this subclause, CQI/PMI/RI/PTI/CRI on PUCCH shall not be reported.
- else:
  - in current subframe n, if the MAC entity would not be in Active Time considering grants/assignments/DRX Command MAC control elements/Long DRX Command MAC control elements received and Scheduling Request sent until and including subframe n-5 when evaluating all DRX Active Time conditions as specified in this subclause, CQI/PMI/RI/PTI/CRI on PUCCH shall not be reported.

Regardless of whether the MAC entity is monitoring PDCCH or not, the MAC entity receives and transmits HARQ feedback and transmits type-1-triggered SRS [2] when such is expected.

NOTE: The same Active Time applies to all activated serving cell(s).

NOTE: In case of downlink spatial multiplexing, if a TB is received while the HARQ RTT Timer is running and the previous transmission of the same TB was received at least N subframes before the current subframe (where N corresponds to the HARQ RTT Timer), the MAC entity should process it and restart the HARQ RTT Timer.

NOTE: The BL UE and the UE in enhanced coverage waits until the last subframe of the configured MPDCCH search space before executing the next specified action.

ASUS EX2033
Samsung v. ASUS
IPR2024-00614

5.7a Discontinuous Reception (DRX) for SC-PTM

Each G-RNTI of the MAC entity may be configured by RRC with a DRX functionality that controls the UE's PDCCH monitoring activity for this G-RNTI as specified in [8]. When in RRC_IDLE or RRC_CONNECTED, if DRX is configured, the MAC entity is allowed to monitor the PDCCH for this G-RNTI discontinuously using the DRX operation specified in this subclause; otherwise the MAC entity monitors the PDCCH for this G-RNTI continuously. For each G-RNTI of the MAC entity, RRC controls its DRX operation by configuring the timers *onDurationTimerSCPTM*, *drx-InactivityTimerSCPTM*, the *SC-MTCH-SchedulingCycle* and the value of the *SC-MTCH-SchedulingOffset*. The DRX operation specified in this subclause is performed independently for each G-RNTI and independently from the DRX operation specified in subcaluse 5.7.

When DRX is configured for a G-RNTI, the Active Time includes the time while:

- *onDurationTimerSCPTM* or *drx-InactivityTimerSCPTM* is running.

When DRX is configured for a G-RNTI as specified in [8], the MAC entity shall for each subframe for this G-RNTI:

- if [(SFN * 10) + subframe number] modulo (*SC-MTCH-SchedulingCycle*) = *SC-MTCH-SchedulingOffset*:
  - start *onDurationTimerSCPTM*.
- during the Active Time, for a PDCCH-subframe:
  - monitor the PDCCH;
  - if the PDCCH indicates a DL transmission:
    - start or restart *drx-InactivityTimerSCPTM*.

5.8 MAC reconfiguration

When a reconfiguration of the MAC entity is requested by upper layers, the MAC entity shall:

- upon addition of an SCell, initialize the corresponding HARQ entity;
- upon removal of an SCell, remove the corresponding HARQ entity;
- for timers apply the new value when the timer is (re)started;
- when counters are initialized apply the new maximum parameter value;
- for other parameters, apply immediately the configurations received from upper layers.

5.9 MAC Reset

If a reset of the MAC entity is requested by upper layers, the MAC entity shall:

- initialize Bj for each logical channel to zero;
- stop (if running) all timers;
- consider all *timeAlignmentTimer*s as expired and perform the corresponding actions in subclause 5.2;
- set the NDIs for all uplink HARQ processes to the value 0;
- stop, if any, ongoing RACH procedure;
- discard explicitly signalled *ra-PreambleIndex* and *ra-PRACH-MaskIndex*, if any;
- flush Msg3 buffer;
- cancel, if any, triggered Scheduling Request procedure;
- cancel, if any, triggered Buffer Status Reporting procedure;

ASUS EX2033
Samsung v. ASUS
IPR2024-00614

- cancel, if any, triggered Power Headroom Reporting procedure;
- flush the soft buffers for all DL HARQ processes;
- for each DL HARQ process, consider the next received transmission for a TB as the very first transmission;
- release, if any, Temporary C-RNTI.

5.10 Semi-Persistent Scheduling

When Semi-Persistent Scheduling is enabled by RRC, the following information is provided [8]:

- Semi-Persistent Scheduling C-RNTI;
- Uplink Semi-Persistent Scheduling interval *semiPersistSchedIntervalUL* and number of empty transmissions before implicit release *implicitReleaseAfter*, if Semi-Persistent Scheduling is enabled for the uplink;
- Whether *twoIntervalsConfig* is enabled or disabled for uplink, only for TDD;
- Downlink Semi-Persistent Scheduling interval *semiPersistSchedIntervalDL* and number of configured HARQ processes for Semi-Persistent Scheduling *numberOfConfSPS-Processes*, if Semi-Persistent Scheduling is enabled for the downlink;

When Semi-Persistent Scheduling for uplink or downlink is disabled by RRC, the corresponding configured grant or configured assignment shall be discarded.

Semi-Persistent Scheduling is supported on the SpCell only.

Semi-Persistent Scheduling is not supported for RN communication with the E-UTRAN in combination with an RN subframe configuration.

NOTE: When eIMTA is configured for the SpCell, if a configured uplink grant or a configured downlink assignment occurs on a subframe that can be reconfigured through eIMTA L1 signalling, then the UE behaviour is left unspecified.

5.10.1 Downlink

After a Semi-Persistent downlink assignment is configured, the MAC entity shall consider sequentially that the Nth assignment occurs in the subframe for which:

- $(10 * SFN + subframe) = [(10 * SFN_{start\ time} + subframe_{start\ time}) + N * semiPersistSchedIntervalDL]$ modulo 10240.

Where $SFN_{start\ time}$ and $subframe_{start\ time}$ are the SFN and subframe, respectively, at the time the configured downlink assignment were (re-)initialised.

For BL UEs or UEs in enhanced coverage $SFN_{start\ time}$ and $subframe_{start\ time}$ refer to SFN and subframe of the first transmission of PDSCH where configured downlink assignment was (re-)initialized.

5.10.2 Uplink

After a Semi-Persistent Scheduling uplink grant is configured, the MAC entity shall:

- if *twoIntervalsConfig* is enabled by upper layer:
  - set the Subframe_Offset according to Table 7.4-1.
- else:
  - set Subframe_Offset to 0.
- consider sequentially that the Nth grant occurs in the subframe for which:

ASUS EX2033
Samsung v. ASUS
IPR2024-00614

- (10 * SFN + subframe) = [(10 * $SFN_{start\ time}$ + $subframe_{start\ time}$) + N * *semiPersistSchedIntervalUL* + Subframe_Offset * (N modulo 2)] modulo 10240.

Where $SFN_{start\ time}$ and $subframe_{start\ time}$ are the SFN and subframe, respectively, at the time the configured uplink grant were (re-)initialised.

For TDD, the MAC entity is configured with *semiPersistSchedIntervalUL* shorter than 10 subframes, the Nth grant shall be ignored if it occurs in a downlink subframe or a special subframe.

If the MAC entity is not configured with *skipUplinkTxSPS*, the MAC entity shall clear the configured uplink grant immediately after *implicitReleaseAfter* [8] number of consecutive new MAC PDUs each containing zero MAC SDUs have been provided by the Multiplexing and Assembly entity, on the Semi-Persistent Scheduling resource.

If SPS confirmation has been triggered and not cancelled:

- if the MAC entity has UL resources allocated for new transmission for this TTI:
  - instruct the Multiplexing and Assembly procedure to generate an SPS confirmation MAC Control Element as defined in subclause 6.1.3.11;
  - cancel the triggered SPS confirmation.

The MAC entity shall clear the configured uplink grant immediately after first transmission of SPS confirmation MAC Control Element triggered by the SPS release.

NOTE: Retransmissions for Semi-Persistent Scheduling can continue after clearing the configured uplink grant.

For BL UEs or UEs in enhanced coverage $SFN_{start\ time}$ and $subframe_{start\ time}$ refer to SFN and subframe of the first transmission of PUSCH where configured uplink grant was (re-)initialized.

5.11 Handling of unknown, unforeseen and erroneous protocol data

When a MAC entity receives a MAC PDU for the MAC entity's C-RNTI or Semi-Persistent Scheduling C-RNTI, or by the configured downlink assignment, or on SL-SCH, containing reserved or invalid values, the MAC entity shall:

- discard the received PDU.

When a MAC entity receives a MAC PDU on MCH containing reserved values, or on DL-SCH containing reserved values for G-RNTI or SC-RNTI, the MAC entity shall:

- ignore the MAC PDU subheaders containing reserved values and the corresponding MAC SDUs;
- in the MAC control elements, ignore the fields containing reserved values and the fields associated with the fields containing reserved values.

5.12 MCH reception

MCH transmission may occur in subframes configured by upper layer for MCCH or MTCH transmission. For each such subframe, upper layer indicates if *signallingMCS* or *dataMCS* applies. The transmission of an MCH occurs in a set of subframes defined by *PMCH-Config*. An MCH Scheduling Information MAC control element is included in the first subframe allocated to the MCH within the MCH scheduling period to indicate the position of each MTCH and unused subframes on the MCH. If *pmch-InfoListExt* is configured for an MCH, an Extended MCH Scheduling Information MAC control element is included in the first subframe allocated to the corresponding MCH within the MCH scheduling period to indicate the position of each MTCH and unused subframes on the MCH, and to indicate whether MTCH transmission is to be suspended. The MAC entity shall assume that the first scheduled MTCH starts immediately after the MCCH or the MCH Scheduling Information MAC control element or the Extended MCH Scheduling Information MAC control element if the MCCH is not present, and the other scheduled MTCH(s) start immediately after the previous MTCH, at the earliest in the subframe where the previous MTCH stops. When the MAC entity needs to receive MCH, the MAC entity shall:

- attempt to decode the TB on the MCH;

ASUS EX2033
Samsung v. ASUS
IPR2024-00614

- if a TB on the MCH has been successfully decoded:
  - demultiplex the MAC PDU and deliver the MAC SDU(s) to upper layers.

When the MAC entity receives the Extended MCH Scheduling Information MAC control element, the MAC entity shall indicate the MTCH(s) to be suspended to the upper layers.

NOTE: The MAC entity should continue receiving MCH until the MTCH is removed from the MCCH.

5.13 Activation/Deactivation of SCells

If the MAC entity is configured with one or more SCells, the network may activate and deactivate the configured SCells. The SpCell is always activated. The network activates and deactivates the SCell(s) by sending the Activation/Deactivation MAC control element described in subclause 6.1.3.8. Furthermore, the MAC entity maintains a *sCellDeactivationTimer* timer per configured SCell (except the SCell configured with PUCCH, if any) and deactivates the associated SCell upon its expiry. The same initial timer value applies to each instance of the *sCellDeactivationTimer* and it is configured by RRC. The configured SCells are initially deactivated upon addition and after a handover. The configured SCG SCells are initially deactivated after a SCG change.

The MAC entity shall for each TTI and for each configured SCell:

- if the MAC entity receives an Activation/Deactivation MAC control element in this TTI activating the SCell, the MAC entity shall in the TTI according to the timing defined in [2]:
  - activate the SCell; i.e. apply normal SCell operation including:
    - SRS transmissions on the SCell;
    - CQI/PMI/RI/PTI/CRI reporting for the SCell;
    - PDCCH monitoring on the SCell;
    - PDCCH monitoring for the SCell;
    - PUCCH transmissions on the SCell, if configured.
  - start or restart the *sCellDeactivationTimer* associated with the SCell;
  - trigger PHR according to subclause 5.4.6.
- else, if the MAC entity receives an Activation/Deactivation MAC control element in this TTI deactivating the SCell; or
- if the *sCellDeactivationTimer* associated with the activated SCell expires in this TTI:
  - in the TTI according to the timing defined in [2]:
    - deactivate the SCell;
    - stop the *sCellDeactivationTimer* associated with the SCell;
    - flush all HARQ buffers associated with the SCell.
- if PDCCH on the activated SCell indicates an uplink grant or downlink assignment; or
- if PDCCH on the Serving Cell scheduling the activated SCell indicates an uplink grant or a downlink assignment for the activated SCell:
  - restart the *sCellDeactivationTimer* associated with the SCell;
- if the SCell is deactivated:
  - not transmit SRS on the SCell;
  - not report CQI/PMI/RI/PTI/CRI for the SCell;

ASUS EX2033
Samsung v. ASUS
IPR2024-00614

- not transmit on UL-SCH on the SCell;
- not transmit on RACH on the SCell;
- not monitor the PDCCH on the SCell;
- not monitor the PDCCH for the SCell;
- not transmit PUCCH on the SCell.

HARQ feedback for the MAC PDU containing Activation/Deactivation MAC control element shall not be impacted by PCell interruption due to SCell activation/deactivation [9].

NOTE: When SCell is deactivated, the ongoing Random Access procedure on the SCell, if any, is aborted.

5.14 SL-SCH Data transfer

5.14.1 SL-SCH Data transmission

5.14.1.1 SL Grant reception and SCI transmission

In order to transmit on the SL-SCH the MAC entity must have at least one sidelink grant.

Sidelink grants are selected as follows for sidelink communication:

- if the MAC entity is configured to receive a single sidelink grant dynamically on the PDCCH and more data is available in STCH than can be transmitted in the current SC period, the MAC entity shall:
  - using the received sidelink grant determine the set of subframes in which transmission of SCI and transmission of first transport block occur according to subclause 14.2.1 of [2];
  - consider the received sidelink grant to be a configured sidelink grant occurring in those subframes starting at the beginning of the first available SC Period which starts at least 4 subframes after the subframe in which the sidelink grant was received, overwriting a previously configured sidelink grant occurring in the same SC period, if available;
  - clear the configured sidelink grant at the end of the corresponding SC Period;
- else, if the MAC entity is configured by upper layers to receive multiple sidelink grants dynamically on the PDCCH and more data is available in STCH than can be transmitted in the current SC period, the MAC entity shall for each received sidelink grant:
  - using the received sidelink grant determine the set of subframes in which transmission of SCI and transmission of first transport block occur according to subclause 14.2.1 of [2];
  - consider the received sidelink grant to be a configured sidelink grant occurring in those subframes starting at the beginning of the first available SC Period which starts at least 4 subframes after the subframe in which the sidelink grant was received, overwriting a previously configured sidelink grant received in the same subframe number but in a different radio frame as this configured sidelink grant occurring in the same SC period, if available;
  - clear the configured sidelink grant at the end of the corresponding SC Period;
- else, if the MAC entity is configured by upper layers to transmit using one or multiple pool(s) of resources as indicated in subclause 5.10.4 of [8] and more data is available in STCH than can be transmitted in the current SC period, the MAC entity shall for each sidelink grant to be selected:
  - if configured by upper layers to use a single pool of resources:
    - select that pool of resources for use;
  - else, if configured by upper layers to use multiple pools of resources:

ASUS EX2033
Samsung v. ASUS
IPR2024-00614

- select a pool of resources for use from the pools of resources configured by upper layers whose associated priority list includes the priority of the highest priority of the sidelink logical channel in the MAC PDU to be transmitted;

NOTE: If more than one pool of resources has an associated priority list which includes the priority of the sidelink logical channel with the highest priority in the MAC PDU to be transmitted, it is left for UE implementation which one of those pools of resources to select.

- randomly select the time and frequency resources for SL-SCH and SCI of a sidelink grant from the selected resource pool. The random function shall be such that each of the allowed selections [2] can be chosen with equal probability;
- use the selected sidelink grant to determine the set of subframes in which transmission of SCI and transmission of first transport block occur according to subclause 14.2.1 of [2];
- consider the selected sidelink grant to be a configured sidelink grant occurring in those subframes starting at the beginning of the first available SC Period which starts at least 4 subframes after the subframe in which the sidelink grant was selected;
- clear the configured sidelink grant at the end of the corresponding SC Period;

NOTE: Retransmissions on SL-SCH cannot occur after the configured sidelink grant has been cleared.

NOTE: If the MAC entity is configured by upper layers to transmit using one or multiple pool(s) of resources as indicated in subclause 5.10.4 of [8], it is left for UE implementation how many sidelink grants to select within one SC period taking the number of sidelink processes into account.

Sidelink grants are selected as follows for V2X sidelink communication:

- if the MAC entity is configured to receive a sidelink grant dynamically on the PDCCH and data is available in STCH, the MAC entity shall:
  - using the received sidelink grant determine the number of HARQ retransmissions and the set of subframes in which transmission of SCI and transmission of a transport block occur according to subclause 14.2.1 and 14.1.1.4A of [2];
  - consider the received sidelink grant to be a configured sidelink grant;
- else, if the MAC entity is configured by upper layers to transmit based on sensing using a pool of resources as indicated in subclause 5.10.y.1 of [8], the MAC entity selects to create a configured sidelink grant corresponding to transmissions of multiple MAC PDUs, and data is available in STCH, the MAC entity shall for each Sidelink process configured for multiple transmissions based on sensing:
  - if SL_RESOURCE_RESELECTION_COUNTER = 0 and the MAC entity randomly selects, with equal probability, a value in the interval [0, 1] which is above the probability configured by upper layers in *probResourceKeep*; or
  - if the configured sidelink grant cannot accommodate a RLC SDU by using the maximum allowed MCS configured by upper layers in *maxMCS-PSSCH* and the MAC entity selects not to segment the RLC SDU; or

NOTE: If the configured sidelink grant cannot accommodate the RLC SDU, it is left for UE implementation whether to perform segmentation or sidelink resource reselection.

  - if a pool of resources is configured or reconfigured by upper layers:
    - clear the configured sidelink grant, if available;
    - randomly select, with equal probability, an integer value in the interval [5, 15] and set SL_RESOURCE_RESELECTION_COUNTER to the selected value;
    - select the number of HARQ retransmissions from the allowed numbers configured by upper layers in *allowedRetxNumberPSSCH*, and an amount of frequency resources within the range configured by upper layers between *minRB-NumberPSSCH* and *maxRB-NumberPSSCH*;

ASUS EX2033
Samsung v. ASUS
IPR2024-00614

- select an integer value in the interval [1, 10] from the allowed values configured by upper layers in *restrictResourceReservationPeriod* and set the resource reservation interval by multiplying 100 with the selected value;

NOTE: How the UE selects this integer value is up to UE implementation.

- randomly select the time and frequency resources for transmission opportunities of SCI and SL-SCH corresponding to the number of transmissions of MAC PDUs determined in subclause 14.1.1.4B of [2] with the resource reservation interval from the resource pool, excluding the resources indicated by the physical layer according to subclause 14.1.1.6 of [2]. The random function shall be such that each of the allowed selections can be chosen with equal probability;
- if the number of HARQ retransmissions is equal to 1 and there are available resources, except the resources already excluded by the physical layer, that meets the conditions in subcause 14.1.1.7 of [2] for more transmission opportunities:
  - randomly select the time and frequency resources for the other transmission opportunities of SCI and SL-SCH corresponding to the number of additional transmissions of the MAC PDUs determined in subclause 14.1.1.4B of [2] with the resource reservation interval from the available resources. The random function shall be such that each of the allowed selections can be chosen with equal probability;
  - consider a set of transmission opportunities which comes first in time as the selected sidelink grant and a set of transmission opportunities which comes later in time as the retransmission opportunities;
- else:
  - consider the set as the selected sidelink grant;
- use the selected sidelink grant to determine the set of subframes in which transmissions of SCI and SL-SCH occur according to subclause 14.2.1 and 14.1.1.4B of [2];
- consider the selected sidelink grant to be a configured sidelink grant;

- else if SL_RESOURCE_RESELECTION_COUNTER = 0 and the MAC entity randomly selects, with equal probability, a value in the interval [0, 1] which is less than or equal to the probability configured by upper layers in *probResourceKeep*:
  - clear the configured sidelink grant, if available;
  - randomly select, with equal probability, an integer value in the interval [5, 15] and set SL_RESOURCE_RESELECTION_COUNTER to the selected value;
  - use the previously selected sidelink grant for the number of transmissions of the MAC PDUs determined in subclause 14.1.1.4B of [2] with the resource reservation interval to determine the set of subframes in which transmissions of SCI and SL-SCH occur according to subclause 14.2.1 and 14.1.1.4B of [2];
  - consider the selected sidelink grant to be a configured sidelink grant;

- else, if the MAC entity is configured by upper layers to transmit based on either sensing or random selection using a pool of resources as indicated in subclause 5.10.y.1 of [8], the MAC entity selects to create a configured sidelink grant corresponding to transmission(s) of a single MAC PDU, and data is available in STCH, the MAC entity shall for a Sidelink process:
  - select the number of HARQ retransmissions from the allowed numbers configured by upper layers in *allowedRetxNumberPSSCH*, and an amount of frequency resources within the range configured by upper layers between *minRB-NumberPSSCH* and *maxRB-NumberPSSCH*;
  - if transmission based on random selection is configured by upper layers:
    - randomly select the time and frequency resources for one transmission opportunity of SCI and SL-SCH from the resource pool. The random function shall be such that each of the allowed selections can be chosen with equal probability;
  - else:

ASUS EX2033
Samsung v. ASUS
IPR2024-00614

- randomly select the time and frequency resources for one transmission opportunity of SCI and SL-SCH from the resource pool, excluding the resources indicated by the physical layer according to subclause 14.1.1.6 of [2]. The random function shall be such that each of the allowed selections can be chosen with equal probability;

- if the number of HARQ retransmissions is equal to 1:
  - if transmission based on random selection is configured by upper layers and there are available resources that meet the conditions in subcause 14.1.1.7 of [2] for more transmission opportunity:
    - randomly select the time and frequency resources for the other transmission opportunity of SCI and SL-SCH corresponding to additional transmission of the MAC PDU from the available resources. The random function shall be such that each of the allowed selections can be chosen with equal probability;
  - else, if transmission based on sensing is configured by upper layers and there are available resources, except the resources already excluded by the physical layer, that meet the conditions in subcause 14.1.1.7 of [2] for more transmission opportunity:
    - randomly select the time and frequency resources for the other transmission opportunity of SCI and SL-SCH corresponding to additional transmission of the MAC PDU from the available resources. The random function shall be such that each of the allowed selections can be chosen with equal probability;
  - consider a transmission opportunity which comes first in time as the selected sidelink grant and a transmission opportunity which comes later in time as the retransmission opportunity;
- else:
  - consider the transmission opportunity as the selected sidelink grant;
- use the selected sidelink grant to determine the subframes in which transmission(s) of SCI and SL-SCH occur according to subclause 14.2.1 and 14.1.1.4B of [2];
- consider the selected sidelink grant to be a configured sidelink grant;

The MAC entity shall for each subframe:

- if the MAC entity has a configured sidelink grant occurring in this subframe:
  - if the configured sidelink grant corresponds to transmission of SCI:
    - instruct the physical layer to transmit SCI corresponding to the configured sidelink grant;
    - for V2X sidelink communication, deliver the configured sidelink grant and the associated HARQ information to the Sidelink HARQ Entity for this subframe;
  - else if the configured sidelink grant corresponds to transmission of first transport block for sidelink communication:
    - deliver the configured sidelink grant and the associated HARQ information to the Sidelink HARQ Entity for this subframe.

NOTE: If the MAC entity has multiple configured grants occurring in one subframe and if not all of them can be processed due to the single-cluster SC-FDM restriction, it is left for UE implementation which one of these to process according to the procedure above.

5.14.1.2 Sidelink HARQ operation

5.14.1.2.1 Sidelink HARQ Entity

There is one Sidelink HARQ Entity at the MAC entity for transmission on SL-SCH, which maintains a number of parallel Sidelink processes.

ASUS EX2033
Samsung v. ASUS
IPR2024-00614

The number of transmitting Sidelink processes associated with the Sidelink HARQ Entity is defined in [8]. A sidelink process may be configured for multiple transmissions based on sensing. For multiple transmissions based on sensing, the maximum number of transmitting Sidelink processes with the Sidelink HARQ Entity is 2.

A delivered and configured sidelink grant and its associated HARQ information are associated with a Sidelink process.

For each subframe of the SL-SCH and each Sidelink process, the Sidelink HARQ Entity shall:

- if a sidelink grant has been indicated for this Sidelink process and there is SL data, for sidelink logical channels of ProSe destination associated with this sidelink grant, available for transmission:
  - obtain the MAC PDU from the "Multiplexing and assembly" entity;
  - deliver the MAC PDU and the sidelink grant and the HARQ information to this Sidelink process;
  - instruct this Sidelink process to trigger a new transmission.
- else, if this subframe corresponds to retransmission opportunity for this Sidelink process:
  - instruct this Sidelink process to trigger a retransmission.

NOTE: The resources for retransmission opportunities are specified in subclause 14.2.1 of [2] unless specified in subclause 5.14.1.1.

5.14.1.2.2 Sidelink process

The Sidelink process is associated with a HARQ buffer.

The sequence of redundancy versions is 0, 2, 3, 1. The variable CURRENT_IRV is an index into the sequence of redundancy versions. This variable is updated modulo 4.

New transmissions and retransmissions either for a given SC period in sidelink communication or in V2X sidelink communication are performed on the resource indicated in the sidelink grant as specified in subclause 5.14.1.1 and with the MCS configured by upper layers (if configured) unless selected below.

If the sidelink process is configured to perform multiple transmissions for V2X sidelink communication the process maintains a counter SL_RESOURCE_RESELECTION_COUNTER. For other configurations of the sidelink process, this counter is not available.

If the Sidelink HARQ Entity requests a new transmission, the Sidelink process shall:

- if the MCS is not configured by upper layers:
  - select a MCS which is, if configured, within the range configured by upper layers between *minMCS-PSSCH* and *maxMCS-PSSCH*;

NOTE: MCS selection is up to UE implementation if the MCS or the corresponding range is not configured by upper layers.

- set CURRENT_IRV to 0;
- store the MAC PDU in the associated HARQ buffer;
- store the sidelink grant received from the Sidelink HARQ Entity;
- generate a transmission as described below.

If the Sidelink HARQ Entity requests a retransmission, the Sidelink process shall:

- generate a transmission as described below.

ASUS EX2033
Samsung v. ASUS
IPR2024-00614

To generate a transmission, the Sidelink process shall:

- if there is no uplink transmission or if the MAC entity is able to perform uplink transmissions and transmissions on SL-SCH simultaneously at the time of the transmission, and:
- if there is no Sidelink Discovery Gap for Transmission or no transmission on PSDCH at the time of the transmission:
  - instruct the physical layer to generate a transmission according to the stored sidelink grant with the redundancy version corresponding to the CURRENT_IRV value.
- increment CURRENT_IRV by 1;
- if this transmission corresponds to the last transmission of the MAC PDU:
  - decrement SL_RESOURCE_RESELECTION_COUNTER by 1, if available.

5.14.1.3 Multiplexing and assembly

For PDU(s) associated with one SCI, MAC shall consider only logical channels with the same Source Layer-2 ID-Destination Layer-2 ID pair.

Multiple transmissions within overlapping SC periods to different ProSe Destinations are allowed subject to single-cluster SC-FDM constraint.

In V2X sidelink communication, multiple transmissions for different Sidelink processes are allowed to be independently performed in different subframes.

5.14.1.3.1 Logical channel prioritization

The Logical Channel Prioritization procedure is applied when a new transmission is performed. Each sidelink logical channel has an associated priority which is the PPPP. Multiple sidelink logical channels may have the same associated priority. The mapping between priority and LCID is left for UE implementation.

The MAC entity shall perform the following Logical Channel Prioritization procedure either for each SCI transmitted in an SC period in sidelink communication, or for each SCI corresponding to a new transmission in V2X sidelink communication:

- The MAC entity shall allocate resources to the sidelink logical channels in the following steps:
  - Only consider sidelink logical channels not previously selected for this SC period and the SC periods (if any) which are overlapping with this SC period, to have data available for transmission in sidelink communication.
  - Step 0: Select a ProSe Destination, having the sidelink logical channel with the highest priority, among the sidelink logical channels having data available for transmission;
- For each MAC PDU associated to the SCI:
  - Step 1: Among the sidelink logical channels belonging to the selected ProSe Destination and having data available for transmission, allocate resources to the sidelink logical channel with the highest priority;
  - Step 2: if any resources remain, sidelink logical channels belonging to the selected ProSe Destination are served in decreasing order of priority until either the data for the sidelink logical channel(s) or the SL grant is exhausted, whichever comes first. Sidelink logical channels configured with equal priority should be served equally.
- The UE shall also follow the rules below during the scheduling procedures above:
  - the UE should not segment an RLC SDU (or partially transmitted SDU) if the whole SDU (or partially transmitted SDU) fits into the remaining resources;

ASUS EX2033
Samsung v. ASUS
IPR2024-00614

- if the UE segments an RLC SDU from the sidelink logical channel, it shall maximize the size of the segment to fill the grant as much as possible;
- the UE should maximise the transmission of data;
- if the MAC entity is given an sidelink grant size that is equal to or larger than 10 bytes (for sidelink communication) or 11 bytes (for V2X sidelink communication) while having data available for transmission, the MAC entity shall not transmit only padding.

5.14.1.3.2 Multiplexing of MAC SDUs

The MAC entity shall multiplex MAC SDUs in a MAC PDU according to subclauses 5.14.1.3.1 and 6.1.6.

5.14.1.4 Buffer Status Reporting

The sidelink Buffer Status reporting procedure is used to provide the serving eNB with information about the amount of sidelink data available for transmission in the SL buffers associated with the MAC entity. RRC controls BSR reporting for the sidelink by configuring the two timers *periodic-BSR-TimerSL* and *retx-BSR-TimerSL*. Each sidelink logical channel belongs to a ProSe Destination. Each sidelink logical channel is allocated to an LCG depending on the priority of the sidelink logical channel and the mapping between LCG ID and priority which is provided by upper layers in *logicalChGroupInfoList* [8]. LCG is defined per ProSe Destination.

A sidelink Buffer Status Report (BSR) shall be triggered if any of the following events occur:

- if the MAC entity has a configured SL-RNTI:
  - SL data, for a sidelink logical channel of a ProSe Destination, becomes available for transmission in the RLC entity or in the PDCP entity (the definition of what data shall be considered as available for transmission is specified in [3] and [4] respectively) and either the data belongs to a sidelink logical channel with higher priority than the priorities of the sidelink logical channels which belong to any LCG belonging to the same ProSe Destination and for which data is already available for transmission, or there is currently no data available for transmission for any of the sidelink logical channels belonging to the same ProSe Destination, in which case the Sidelink BSR is referred below to as "Regular Sidelink BSR";
  - UL resources are allocated and number of padding bits remaining after a Padding BSR has been triggered is equal to or larger than the size of the Sidelink BSR MAC control element containing the buffer status for at least one LCG of a ProSe Destination plus its subheader, in which case the Sidelink BSR is referred below to as "Padding Sidelink BSR";
  - *retx-BSR-TimerSL* expires and the MAC entity has data available for transmission for any of the sidelink logical channels, in which case the Sidelink BSR is referred below to as "Regular Sidelink BSR";
  - *periodic-BSR-TimerSL* expires, in which case the Sidelink BSR is referred below to as "Periodic Sidelink BSR";
- else:
  - An SL-RNTI is configured by upper layers and SL data is available for transmission in the RLC entity or in the PDCP entity (the definition of what data shall be considered as available for transmission is specified in [3] and [4] respectively), in which case the Sidelink BSR is referred below to as "Regular Sidelink BSR".

For Regular and Periodic Sidelink BSR:

- if the number of bits in the UL grant is equal to or larger than the size of a Sidelink BSR containing buffer status for all LCGs having data available for transmission plus its subheader:
  - report Sidelink BSR containing buffer status for all LCGs having data available for transmission;
- else report Truncated Sidelink BSR containing buffer status for as many LCGs having data available for transmission as possible, taking the number of bits in the UL grant into consideration.

For Padding Sidelink BSR:

ASUS EX2033
Samsung v. ASUS
IPR2024-00614

- if the number of padding bits remaining after a Padding BSR has been triggered is equal to or larger than the size of a Sidelink BSR containing buffer status for all LCGs having data available for transmission plus its subheader:
  - report Sidelink BSR containing buffer status for all LCGs having data available for transmission;
- else report Truncated Sidelink BSR containing buffer status for as many LCGs having data available for transmission as possible, taking the number of bits in the UL grant into consideration.

If the Buffer Status reporting procedure determines that at least one Sidelink BSR has been triggered and not cancelled:

- if the MAC entity has UL resources allocated for new transmission for this TTI and the allocated UL resources can accommodate a Sidelink BSR MAC control element plus its subheader as a result of logical channel prioritization:
  - instruct the Multiplexing and Assembly procedure to generate the Sidelink BSR MAC control element(s);
  - start or restart *periodic-BSR-TimerSL* except when all the generated Sidelink BSRs are Truncated Sidelink BSRs;
  - start or restart *retx-BSR-TimerSL*;
- else if a Regular Sidelink BSR has been triggered:
  - if an uplink grant is not configured:
    - a Scheduling Request shall be triggered.

A MAC PDU shall contain at most one Sidelink BSR MAC control element, even when multiple events trigger a Sidelink BSR by the time a Sidelink BSR can be transmitted in which case the Regular Sidelink BSR and the Periodic Sidelink BSR shall have precedence over the padding Sidelink BSR.

The MAC entity shall restart *retx-BSR-TimerSL* upon reception of an SL grant.

All triggered regular Sidelink BSRs shall be cancelled in case the remaining configured SL grant(s) valid for this SC Period can accommodate all pending data available for transmission in sidelink communication or in case the remaining configured SL grant(s) valid can accommodate all pending data available for transmission in V2X sidelink communication. All triggered Sidelink BSRs shall be cancelled in case the MAC entity has no data available for transmission for any of the sidelink logical channels. All triggered Sidelink BSRs shall be cancelled when a Sidelink BSR (except for Truncated Sidelink BSR) is included in a MAC PDU for transmission. All triggered Sidelink BSRs shall be cancelled, and *retx-BSR-TimerSL* and *periodic-BSR-TimerSL* shall be stopped, when upper layers configure autonomous resource selection.

The MAC entity shall transmit at most one Regular/Periodic Sidelink BSR in a TTI. If the MAC entity is requested to transmit multiple MAC PDUs in a TTI, it may include a padding Sidelink BSR in any of the MAC PDUs which do not contain a Regular/Periodic Sidelink BSR.

All Sidelink BSRs transmitted in a TTI always reflect the buffer status after all MAC PDUs have been built for this TTI. Each LCG shall report at the most one buffer status value per TTI and this value shall be reported in all Sidelink BSRs reporting buffer status for this LCG.

NOTE: A Padding Sidelink BSR is not allowed to cancel a triggered Regular/Periodic Sidelink BSR. A Padding Sidelink BSR is triggered for a specific MAC PDU only and the trigger is cancelled when this MAC PDU has been built.

5.14.2 SL-SCH Data reception

5.14.2.1 SCI reception

SCI transmitted on the PSCCH indicate if there is a transmission on SL-SCH and provide the relevant HARQ information.

The MAC entity shall:

- for each subframe during which the MAC entity monitors PSCCH:

ASUS EX2033
Samsung v. ASUS
IPR2024-00614

- if SCI for this subframe has been received on the PSCCH for sidelink communication with a Group Destination ID of interest to this MAC entity:
  - determine the set of subframes in which reception of the first transport blocks occur according to subclause 14.2.2 of [2] using the received SCI;
  - store the SCI and associated HARQ information as SCI valid for the subframes corresponding to first transmission of each transport block;
- else if SCI for this subframe has been received on the PSCCH for V2X sidelink communication:
  - determine the set of subframes in which reception of the transport block occur according to subclause 14.1.2 of [2] using the received SCI;
  - store the SCI and associated HARQ information as SCI valid for the subframes corresponding to transmission(s) of the transport block;

- for each subframe for which the MAC entity has a valid SCI:
  - deliver the SCI and the associated HARQ information to the Sidelink HARQ Entity.

5.14.2.2 Sidelink HARQ operation

5.14.2.2.1 Sidelink HARQ Entity

There is one Sidelink HARQ Entity at the MAC entity for reception of the SL-SCH which maintains a number of parallel Sidelink processes.

Each Sidelink process is associated with SCI in which the MAC entity is interested. If SCI includes the Group Destination ID, this interest is as determined by the Group Destination ID of the SCI. The Sidelink HARQ Entity directs HARQ information and associated TBs received on the SL-SCH to the corresponding Sidelink processes.

The number of Receiving Sidelink processes associated with the Sidelink HARQ Entity is defined in [8].

For each subframe of the SL-SCH, the Sidelink HARQ Entity shall:

- for each SCI valid in this subframe:
  - allocate the TB received from the physical layer and the associated HARQ information to a Sidelink process, associate this Sidelink process with this SCI and consider this transmission to be a new transmission.
- for each Sidelink process:
  - if this subframe corresponds to retransmission opportunity for the Sidelink process according to its associated SCI:
    - allocate the TB received from the physical layer and the associated HARQ information to the Sidelink process and consider this transmission to be a retransmission.

5.14.2.2.2 Sidelink process

For each subframe where a transmission takes place for the Sidelink process, one TB and the associated HARQ information is received from the Sidelink HARQ Entity.

The sequence of redundancy versions is 0, 2, 3, 1. The variable CURRENT_IRV is an index into the sequence of redundancy versions. This variable is updated modulo 4.

For each received TB and associated HARQ information, the Sidelink process shall:

- if this is a new transmission:
  - set CURRENT_IRV to 0;

ASUS EX2033
Samsung v. ASUS
IPR2024-00614

- store the received data in the soft buffer and optionally attempt to decode the received data according to CURRENT_IRV.

- else if this is a retransmission:
  - if the data for this TB has not yet been successfully decoded:
    - increment CURRENT_IRV by 1;
    - combine the received data with the data currently in the soft buffer for this TB and optionally attempt to decode the combined data according to the CURRENT_IRV.

- if the data which the MAC entity attempted to decode was successfully decoded for this TB:
  - if this is the first successful decoding of the data for this TB:
    - if the DST field of the decoded MAC PDU subheader is equal to the 16 MSB of any of the Destination Layer-2 ID(s) of the UE for which the 8 LSB are equal to the Group Destination ID in the corresponding SCI:
      - deliver the decoded MAC PDU to the disassembly and demultiplexing entity.
    - else if the DST field of the decoded MAC PDU subheader is equal to any of the Destination Layer-2 ID(s) of the UE:
      - deliver the decoded MAC PDU to the disassembly and demultiplexing entity.

5.14.2.3 Disassembly and demultiplexing

The MAC entity shall disassemble and demultiplex a MAC PDU as defined in subclause 6.1.6.

5.15 SL-DCH data transfer

5.15.1 SL-DCH data transmission

5.15.1.1 Resource allocation

In order to transmit MAC PDU(s) on SL-DCH, the MAC entity shall for every discovery period and each MAC PDU:

- if the MAC entity is configured by upper layers with a specific grant as specified in [8]:
  - using the specific grant determine the set of subframes in which a transmission of new MAC PDU(s) occur according to subclause 14.3.1 of [2];
  - consider the determined set of subframes to be a configured grant for the corresponding discovery period;
  - for every subframe, if the MAC entity has a configured grant occurring in that subframe, deliver the configured grant and the MAC PDU to the Sidelink HARQ Entity;
  - clear the configured grant at the end of the corresponding discovery period.

NOTE: Mapping between grant and physical resources is specified in subclause 9.5.6 of [7].

- else if the MAC entity is configured with a single pool of resources by upper layers:
  - select a random value p1 in the range from 0 to 1, where the random function shall be such that each of the allowed selections can be chosen with equal probability;
  - if p1 is less than *txProbability*:
    - select a random resource from the pool of resources (excluding any resources which are overlapping with PRACH or resources belonging to the subframes of resources already selected for transmissions on SL-DCH in this discovery period), where the random function shall be such that each of the allowed selections (see subclause 14.3.1 of [2]) can be chosen with equal probability;

ASUS EX2033
Samsung v. ASUS
IPR2024-00614

- using the selected resource determine the set of subframes in which the transmission of a MAC PDU can occur according to subclause 14.3.1 of [2]
- consider the determined set of subframes to be a configured grant for the corresponding discovery period;
- for every subframe, if the MAC entity has a configured grant occurring in that subframe, deliver the configured grant and the MAC PDU to the Sidelink HARQ Entity;
- clear the configured grant at the end of the corresponding discovery period.

5.15.1.2 Sidelink HARQ operation

5.15.1.2.1 Sidelink HARQ Entity

There is one Sidelink HARQ Entity at the MAC entity for transmission on SL-DCH, which maintains one Sidelink process for each MAC PDU.

For each subframe of the SL-DCH the Sidelink HARQ Entity shall:

- if a grant and a MAC PDU has been delivered for this subframe to the Sidelink HARQ Entity:
  - deliver the MAC PDU and the grant to the Sidelink process;
  - instruct the Sidelink process to trigger a new transmission.
- else, if this subframe corresponds to retransmission opportunity for the Sidelink process:
  - instruct the Sidelink process to trigger a retransmission.

5.15.1.2.2 Sidelink process

The Sidelink process is associated with a HARQ buffer.

The Sidelink process shall maintain a state variable CURRENT_TX_NB, which indicates the number of transmissions that have taken place for the MAC PDU currently in the buffer. When the Sidelink process is established, CURRENT_TX_NB shall be initialized to 0.

The sequence of redundancy versions is 0, 2, 3, 1. The variable CURRENT_IRV is an index into the sequence of redundancy versions. This variable is up-dated modulo 4.

The Sidelink process is configured with a maximum number of HARQ retransmissions by RRC: *numRetx*.

If the Sidelink HARQ Entity requests a new transmission, the Sidelink process shall:

- set CURRENT_TX_NB to 0;
- set CURRENT_IRV to 0;
- store the MAC PDU in the associated HARQ buffer;
- store the grant received from the Sidelink HARQ Entity;
- generate a transmission as described below.

If the Sidelink HARQ Entity requests a retransmission, the Sidelink process shall:

- increment CURRENT_TX_NB by 1;
- generate a transmission as described below.

ASUS EX2033
Samsung v. ASUS
IPR2024-00614

To generate a transmission, the Sidelink process shall:

- if there is no uplink transmission, no transmission or reception on PSCCH, and no transmission or reception on PSSCH at the time of the transmission; or
- if there is a Sidelink Discovery Gap for Transmission at the time of transmission:
  - instruct the physical layer to generate a transmission according to the grant with the redundancy version corresponding to the CURRENT_IRV value.
- increment CURRENT_IRV by 1.

After performing above actions, the Sidelink process then shall:

- if CURRENT_TX_NB = *numRetx*:
  - flush the HARQ buffer.

5.15.2 SL-DCH data reception

5.15.2.1 Sidelink HARQ operation

5.15.2.1.1 Sidelink HARQ Entity

There is one Sidelink HARQ Entity at the MAC entity for reception on the SL-DCH which maintains a number of parallel Sidelink processes. The Sidelink HARQ Entity directs HARQ information and associated TBs received on the SL-DCH to the corresponding Sidelink processes.

The number of receiving Sidelink processes per Sidelink HARQ Entity is specified in [8].

For each subframe of the SL-DCH, the Sidelink HARQ Entity shall:

- receive the TB and the associated HARQ information from the physical layer;
- if this subframe corresponds to a new transmission opportunity:
  - allocate the received TB (if any) and the associated HARQ information to a non-running Sidelink process and consider this transmission to be a new transmission.
- else, if this subframe corresponds to a retransmission opportunity:
  - allocate the received TB (if any) and the associated HARQ information to its Sidelink process and consider this transmission to be a retransmission.

5.15.2.1.2 Sidelink process

For each subframe where a transmission takes place for the Sidelink process, one TB and the associated HARQ information is received from the Sidelink HARQ Entity.

The sequence of redundancy versions is 0, 2, 3, 1. The variable CURRENT_IRV is an index into the sequence of redundancy versions. This variable is updated modulo 4.

The Sidelink process shall:

- if this subframe corresponds to a new transmission opportunity:
  - set CURRENT_IRV to 0;
- else, if this subframe corresponds to a retransmission opportunity:
  - increment CURRENT_IRV by 1.

ASUS EX2033
Samsung v. ASUS
IPR2024-00614

- if a TB was allocated to the Sidelink process:
  - if this is a new transmission:
    - optionally store the received data in the soft buffer and attempt to decode the received data according to the CURRENT_IRV.
  - else if this is a retransmission:
    - if the data for this TB has not yet been successfully decoded:
      - optionally combine the received data with the data currently in the soft buffer for this TB and attempt to decode the combined data according to the CURRENT_IRV.
  - if the data which the MAC entity attempted to decode was successfully decoded for this TB:
    - if this is the first successful decoding of the data for this TB:
      - deliver the decoded MAC PDU to upper layers.

5.16 SL-BCH data transfer

5.16.1 SL-BCH data transmission

When instructed to send SL-BCH, the MAC entity shall:

- obtain the MAC PDU to transmit from SBCCH;
- deliver the MAC PDU to the physical layer and instruct it to generate a transmission.

5.16.2 SL-BCH data reception

When the MAC entity needs to receive SL-BCH, the MAC entity shall:

- receive and attempt to decode the SL-BCH;
- if a TB on the SL-BCH has been successfully decoded:
  - deliver the decoded MAC PDU to upper layers.

6 Protocol Data Units, formats and parameters

6.1 Protocol Data Units

6.1.1 General

A MAC PDU is a bit string that is byte aligned (i.e. multiple of 8 bits) in length. In the figures in subclause 6.1, bit strings are represented by tables in which the most significant bit is the leftmost bit of the first line of the table, the least significant bit is the rightmost bit on the last line of the table, and more generally the bit string is to be read from left to right and then in the reading order of the lines. The bit order of each parameter field within a MAC PDU is represented with the first and most significant bit in the leftmost bit and the last and least significant bit in the rightmost bit.

MAC SDUs are bit strings that are byte aligned (i.e. multiple of 8 bits) in length. An SDU is included into a MAC PDU from the first bit onward.

The MAC entity shall ignore the value of Reserved bits in downlink MAC PDUs.

ASUS EX2033
Samsung v. ASUS
IPR2024-00614

6.1.2 MAC PDU (DL-SCH and UL-SCH except transparent MAC and Random Access Response, MCH)

A MAC PDU consists of a MAC header, zero or more MAC Service Data Units (MAC SDU), zero, or more MAC control elements, and optionally padding; as described in Figure 6.1.2-3.

Both the MAC header and the MAC SDUs are of variable sizes.

A MAC PDU header consists of one or more MAC PDU subheaders; each subheader corresponds to either a MAC SDU, a MAC control element or padding.

A MAC PDU subheader consists of the five or six header fields R/F2/E/LCID/(F)/L but for the last subheader in the MAC PDU and for fixed sized MAC control elements. The last subheader in the MAC PDU and subheaders for fixed sized MAC control elements consist solely of the four header fields R/F2/E/LCID. A MAC PDU subheader corresponding to padding consists of the four header fields R/F2/E/LCID.

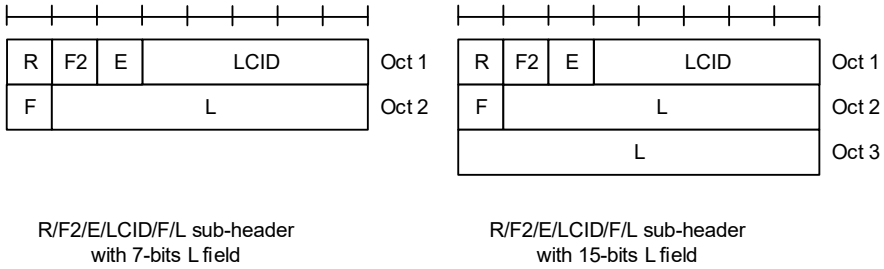

Figure 6.1.2-1: R/F2/E/LCID/F/L MAC subheader

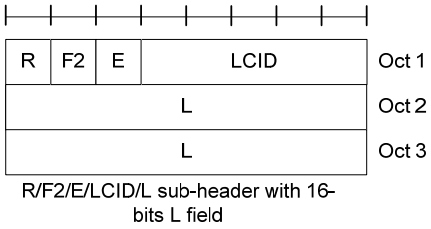

Figure 6.1.2-1a: R/F2/E/LCID/L MAC subheader

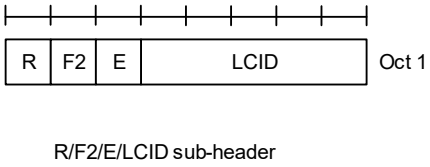

Figure 6.1.2-2: R/F2/E/LCID MAC subheader

MAC PDU subheaders have the same order as the corresponding MAC SDUs, MAC control elements and padding.

MAC control elements are always placed before any MAC SDU.

Padding occurs at the end of the MAC PDU, except when single-byte or two-byte padding is required. Padding may have any value and the MAC entity shall ignore it. When padding is performed at the end of the MAC PDU, zero or more padding bytes are allowed.

When single-byte or two-byte padding is required, one or two MAC PDU subheaders corresponding to padding are placed at the beginning of the MAC PDU before any other MAC PDU subheader.

A maximum of one MAC PDU can be transmitted per TB per MAC entity. A maximum of one MCH MAC PDU can be transmitted per TTI.

ASUS EX2033
Samsung v. ASUS
IPR2024-00614

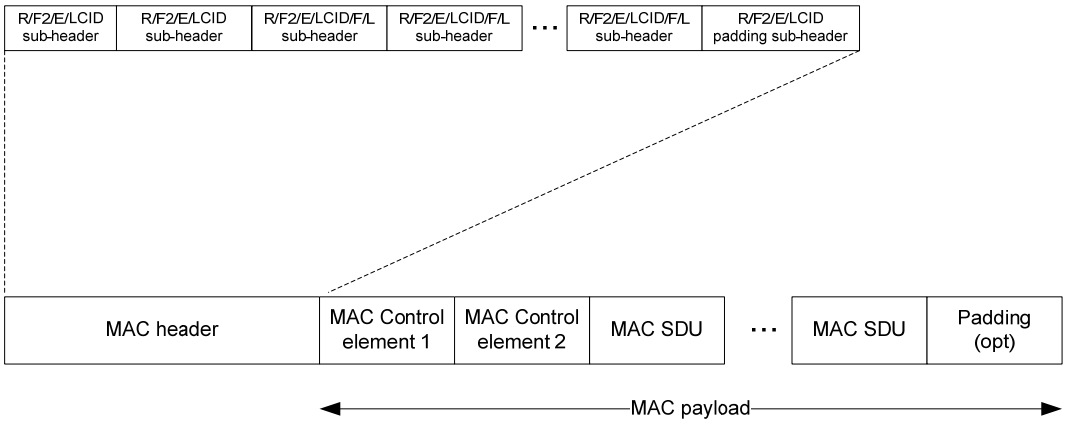

Figure 6.1.2-3: Example of MAC PDU consisting of MAC header, MAC control elements, MAC SDUs and padding

6.1.3 MAC Control Elements

6.1.3.1 Buffer Status Report MAC Control Elements

Buffer Status Report (BSR) MAC control elements consist of either:

- Short BSR and Truncated BSR format: one LCG ID field and one corresponding Buffer Size field (figure 6.1.3.1-1); or
- Long BSR format: four Buffer Size fields, corresponding to LCG IDs #0 through #3 (figure 6.1.3.1-2).

The BSR formats are identified by MAC PDU subheaders with LCIDs as specified in table 6.2.1-2.

The fields LCG ID and Buffer Size are defined as follow:

- LCG ID: The Logical Channel Group ID field identifies the group of logical channel(s) which buffer status is being reported. The length of the field is 2 bits;
- Buffer Size: The Buffer Size field identifies the total amount of data available across all logical channels of a logical channel group after all MAC PDUs for the TTI have been built. The amount of data is indicated in number of bytes. It shall include all data that is available for transmission in the RLC layer and in the PDCP layer; the definition of what data shall be considered as available for transmission is specified in [3] and [4] respectively. The size of the RLC and MAC headers are not considered in the buffer size computation. The length of this field is 6 bits. If *extendedBSR-Sizes* is not configured, the values taken by the Buffer Size field are shown in Table 6.1.3.1-1. If *extendedBSR-Sizes* is configured, the values taken by the Buffer Size field are shown in Table 6.1.3.1-2.

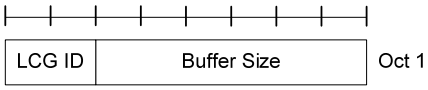

Figure 6.1.3.1-1: Short BSR and Truncated BSR MAC control element

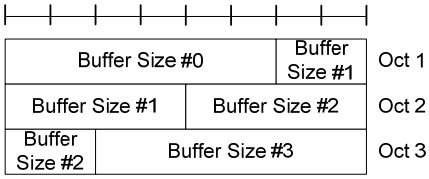

Figure 6.1.3.1-2: Long BSR MAC control element

ASUS EX2033
Samsung v. ASUS
IPR2024-00614

Table 6.1.3.1-1: Buffer size levels for BSR

Index	Buffer Size (BS) value [bytes]	Index	Buffer Size (BS) value [bytes]
0	BS = 0	32	1132 < BS <= 1326
1	0 < BS <= 10	33	1326 < BS <= 1552
2	10 < BS <= 12	34	1552 < BS <= 1817
3	12 < BS <= 14	35	1817 < BS <= 2127
4	14 < BS <= 17	36	2127 < BS <= 2490
5	17 < BS <= 19	37	2490 < BS <= 2915
6	19 < BS <= 22	38	2915 < BS <= 3413
7	22 < BS <= 26	39	3413 < BS <= 3995
8	26 < BS <= 31	40	3995 < BS <= 4677
9	31 < BS <= 36	41	4677 < BS <= 5476
10	36 < BS <= 42	42	5476 < BS <= 6411
11	42 < BS <= 49	43	6411 < BS <= 7505
12	49 < BS <= 57	44	7505 < BS <= 8787
13	57 < BS <= 67	45	8787 < BS <= 10287
14	67 < BS <= 78	46	10287 < BS <= 12043
15	78 < BS <= 91	47	12043 < BS <= 14099
16	91 < BS <= 107	48	14099 < BS <= 16507
17	107 < BS <= 125	49	16507 < BS <= 19325
18	125 < BS <= 146	50	19325 < BS <= 22624
19	146 < BS <= 171	51	22624 < BS <= 26487
20	171 < BS <= 200	52	26487 < BS <= 31009
21	200 < BS <= 234	53	31009 < BS <= 36304
22	234 < BS <= 274	54	36304 < BS <= 42502
23	274 < BS <= 321	55	42502 < BS <= 49759
24	321 < BS <= 376	56	49759 < BS <= 58255
25	376 < BS <= 440	57	58255 < BS <= 68201
26	440 < BS <= 515	58	68201 < BS <= 79846
27	515 < BS <= 603	59	79846 < BS <= 93479
28	603 < BS <= 706	60	93479 < BS <= 109439
29	706 < BS <= 826	61	109439 < BS <= 128125
30	826 < BS <= 967	62	128125 < BS <= 150000
31	967 < BS <=1132	63	BS > 150000

Table 6.1.3.1-2: Extended Buffer size levels for BSR

Index	Buffer Size (BS) value [bytes]	Index	Buffer Size (BS) value [bytes]
0	BS = 0	32	4940 < BS <= 6074
1	0 < BS <= 10	33	6074 < BS <= 7469
2	10 < BS <= 13	34	7469 < BS <= 9185
3	13 < BS <= 16	35	9185 < BS <= 11294
4	16 < BS <= 19	36	11294 < BS <= 13888
5	19 < BS <= 23	37	13888 < BS <= 17077

ASUS EX2033
Samsung v. ASUS
IPR2024-00614

6	23 < BS <= 29	38	17077 < BS <= 20999
7	29 < BS <= 35	39	20999 < BS <= 25822
8	35 < BS <= 43	40	25822 < BS <= 31752
9	43 < BS <= 53	41	31752 < BS <= 39045
10	53 < BS <= 65	42	39045 < BS <= 48012
11	65 < BS <= 80	43	48012 < BS <= 59039
12	80 < BS <= 98	44	59039 < BS <= 72598
13	98 < BS <= 120	45	72598 < BS <= 89272
14	120 < BS <= 147	46	89272 < BS <= 109774
15	147 < BS <= 181	47	109774 < BS <= 134986
16	181 < BS <= 223	48	134986 < BS <= 165989
17	223 < BS <= 274	49	165989 < BS <= 204111
18	274 < BS <= 337	50	204111 < BS <= 250990
19	337 < BS <= 414	51	250990 < BS <= 308634
20	414 < BS <= 509	52	308634 < BS <= 379519
21	509 < BS <= 625	53	379519 < BS <= 466683
22	625 < BS <= 769	54	466683 < BS <= 573866
23	769 < BS <= 945	55	573866 < BS <= 705666
24	945 < BS <= 1162	56	705666 < BS <= 867737
25	1162 < BS <= 1429	57	867737 < BS <= 1067031
26	1429 < BS <= 1757	58	1067031 < BS <= 1312097
27	1757 < BS <= 2161	59	1312097 < BS <= 1613447
28	2161 < BS <= 2657	60	1613447 < BS <= 1984009
29	2657 < BS <= 3267	61	1984009 < BS <= 2439678
30	3267 < BS <= 4017	62	2439678 < BS <= 3000000
31	4017 < BS <=4940	63	BS > 3000000

6.1.3.1a Sidelink BSR MAC Control Elements

Sidelink BSR and Truncated Sidelink BSR MAC control elements consist of one Destination Index field, one LCG ID field and one corresponding Buffer Size field per reported target group.

The Sidelink BSR MAC control elements are identified by MAC PDU subheaders with LCIDs as specified in table 6.2.1-2. They have variable sizes.

For each included group, the fields are defined as follows (figures 6.1.3.1a-1 and 6.1.3.1a-2):

- Destination Index: The Destination Index field identifies the ProSe Destination. The length of this field is 4 bits. The value is set to the index of the destination reported in *destinationInfoList* and if multiple such lists are reported, the value is indexed sequentially across all the lists in the same order as specified in [8];

- LCG ID: The Logical Channel Group ID field identifies the group of logical channel(s) which buffer status is being reported. The length of the field is 2 bits;

- Buffer Size: The Buffer Size field identifies the total amount of data available across all logical channels of a LCG of a ProSe Destination after all MAC PDUs for the TTI have been built. The amount of data is indicated in number of bytes. It shall include all data that is available for transmission in the RLC layer and in the PDCP layer; the definition of what data shall be considered as available for transmission is specified in [3] and [4]

ASUS EX2033
Samsung v. ASUS
IPR2024-00614

respectively. The size of the RLC and MAC headers are not considered in the buffer size computation. The length of this field is 6 bits. The values taken by the Buffer Size field are shown in Table 6.1.3.1-1;

- R: Reserved bit, set to "0".

Buffer Sizes of LCGs are included in decreasing order of the highest priority of the sidelink logical channel belonging to the LCG irrespective of the value of the Destination Index field.

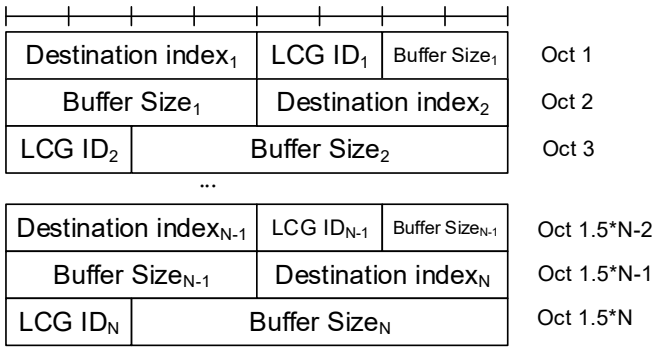

Figure 6.1.3.1a-1: Sidelink BSR and Truncated Sidelink BSR MAC control element for even N

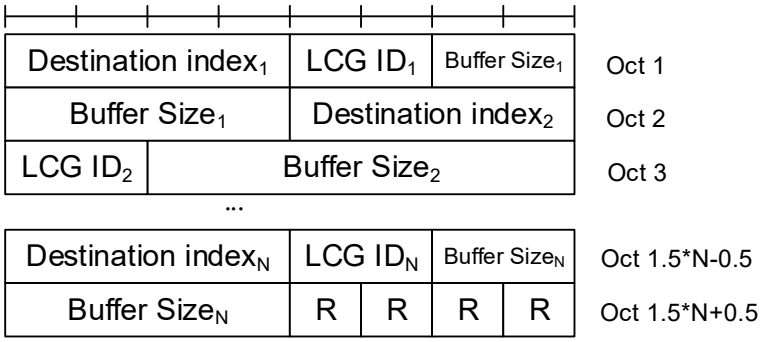

Figure 6.1.3.1a-2: Sidelink BSR and Truncated Sidelink BSR MAC control element for odd N

6.1.3.2 C-RNTI MAC Control Element

The C-RNTI MAC control element is identified by MAC PDU subheader with LCID as specified in table 6.2.1-2.

It has a fixed size and consists of a single field defined as follows (figure 6.1.3.2-1):

- C-RNTI: This field contains the C-RNTI of the MAC entity. The length of the field is 16 bits.

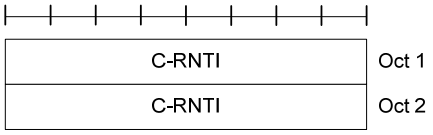

Figure 6.1.3.2-1: C-RNTI MAC control element

6.1.3.3 DRX Command MAC Control Element

The DRX Command MAC control element is identified by a MAC PDU subheader with LCID as specified in table 6.2.1-1.

ASUS EX2033
Samsung v. ASUS
IPR2024-00614

It has a fixed size of zero bits.

6.1.3.4 UE Contention Resolution Identity MAC Control Element

The UE Contention Resolution Identity MAC control element is identified by MAC PDU subheader with LCID as specified in table 6.2.1-1. This control element has a fixed 48-bit size and consists of a single field defined as follows (figure 6.1.3.4-1)

- UE Contention Resolution Identity: This field contains the uplink CCCH SDU if the uplink CCCH SDU is 48 bits long. If the CCCH SDU is longer than 48 bits, this field contains the first 48 bits of the uplink CCCH SDU.

UE Contention Resolution Identity	Oct 1
UE Contention Resolution Identity	Oct 2
UE Contention Resolution Identity	Oct 3
UE Contention Resolution Identity	Oct 4
UE Contention Resolution Identity	Oct 5
UE Contention Resolution Identity	Oct 6

Figure 6.1.3.4-1: UE Contention Resolution Identity MAC control element

6.1.3.5 Timing Advance Command MAC Control Element

The Timing Advance Command MAC control element is identified by MAC PDU subheader with LCID as specified in table 6.2.1-1.

It has a fixed size and consists of a single octet defined as follows (figure 6.1.3.5-1):

- TAG Identity (TAG Id): This field indicates the TAG Identity of the addressed TAG. The TAG containing the SpCell has the TAG Identity 0. The length of the field is 2 bits;

- Timing Advance Command: This field indicates the index value T_A (0, 1, 2… 63) used to control the amount of timing adjustment that MAC entity has to apply (see subclause 4.2.3 of [2]). The length of the field is 6 bits.

TAG Id	Timing Advance Command	Oct 1

Figure 6.1.3.5-1: Timing Advance Command MAC control element

6.1.3.6 Power Headroom Report MAC Control Element

The Power Headroom Report (PHR) MAC control element is identified by a MAC PDU subheader with LCID as specified in table 6.2.1-2. It has a fixed size and consists of a single octet defined as follows (figure 6.1.3.6-1):

- R: reserved bit, set to "0";

- Power Headroom (PH): this field indicates the power headroom level. The length of the field is 6 bits. The reported PH and the corresponding power headroom levels are shown in Table 6.1.3.6-1 below (the corresponding measured values in dB can be found in subclause 9.1.8.4 of [9]).

R	R	PH	Oct 1

Figure 6.1.3.6-1: PHR MAC control element

ASUS EX2033
Samsung v. ASUS
IPR2024-00614

Table 6.1.3.6-1: Power Headroom levels for PHR

PH	Power Headroom Level
0	POWER_HEADROOM_0
1	POWER_HEADROOM_1
2	POWER_HEADROOM_2
3	POWER_HEADROOM_3
…	…
60	POWER_HEADROOM_60
61	POWER_HEADROOM_61
62	POWER_HEADROOM_62
63	POWER_HEADROOM_63

6.1.3.6a Extended Power Headroom Report MAC Control Elements

For *extendedPHR*, the Extended Power Headroom Report (PHR) MAC control element is identified by a MAC PDU subheader with LCID as specified in table 6.2.1-2. It has a variable size and is defined in Figure 6.1.3.6a-2. When Type 2 PH is reported, the octet containing the Type 2 PH field is included first after the octet indicating the presence of PH per SCell and followed by an octet containing the associated $P_{CMAX,c}$ field (if reported). Then follows in ascending order based on the *ServCellIndex* [8] an octet with the Type 1 PH field and an octet with the associated $P_{CMAX,c}$ field (if reported), for the PCell and for each SCell indicated in the bitmap.

For *extendedPHR2*, the Extended Power Headroom Report (PHR) MAC control elements are identified by a MAC PDU subheader with LCID as specified in table 6.2.1-2. They have variable sizes and are defined in Figure 6.1.3.6a-3, Figure 6.1.3.6a-4 and Figure 6.1.3.6a-5. One octet with C fields is used for indicating the presence of PH per SCell when the highest *SCellIndex* of SCell with configured uplink is less than 8, otherwise four octets are used. When Type 2 PH is reported for the PCell, the octet containing the Type 2 PH field is included first after the octet(s) indicating the presence of PH per SCell and followed by an octet containing the associated $P_{CMAX,c}$ field (if reported). Then follows the Type 2 PH field for the PUCCH SCell (if PUCCH on SCell is configured and Type 2 PH is reported for the PUCCH SCell), followed by an octet containing the associated $P_{CMAX,c}$ field (if reported). Then follows in ascending order based on the *ServCellIndex* [8] an octet with the Type 1 PH field and an octet with the associated $P_{CMAX,c}$ field (if reported), for the PCell and for each SCell indicated in the bitmap.

The Extended PHR MAC Control Elements are defined as follows:

- C_i: this field indicates the presence of a PH field for the SCell with *SCellIndex* i as specified in [8]. The C_i field set to "1" indicates that a PH field for the SCell with *SCellIndex* i is reported. The C_i field set to "0" indicates that a PH field for the SCell with *SCellIndex* i is not reported;

- R: reserved bit, set to "0";

- V: this field indicates if the PH value is based on a real transmission or a reference format. For Type 1 PH, V=0 indicates real transmission on PUSCH and V=1 indicates that a PUSCH reference format is used. For Type 2 PH, V=0 indicates real transmission on PUCCH and V=1 indicates that a PUCCH reference format is used. Furthermore, for both Type 1 and Type 2 PH, V=0 indicates the presence of the octet containing the associated $P_{CMAX,c}$ field, and V=1 indicates that the octet containing the associated $P_{CMAX,c}$ field is omitted;

- Power Headroom (PH): this field indicates the power headroom level. The length of the field is 6 bits. The reported PH and the corresponding power headroom levels are shown in Table 6.1.3.6-1 (the corresponding measured values in dB can be found in subclause 9.1.8.4 of [9]);

- P: this field indicates whether the MAC entity applies power backoff due to power management (as allowed by $P\text{-}MPR_c$ [10]). The MAC entity shall set P=1 if the corresponding $P_{CMAX,c}$ field would have had a different value if no power backoff due to power management had been applied;

- $P_{CMAX,c}$: if present, this field indicates the $P_{CMAX,c}$ or $\widetilde{P}_{CMAX,c}$ [2] used for calculation of the preceding PH field.

  The reported $P_{CMAX,c}$ and the corresponding nominal UE transmit power levels are shown in Table 6.1.3.6a-1 (the corresponding measured values in dBm can be found in subclause 9.6.1 of [9]).

ASUS EX2033
Samsung v. ASUS
IPR2024-00614

Figure 6.1.3.6a-1: Void

C_7	C_6	C_5	C_4	C_3	C_2	C_1	R
P	V	PH (Type 2, PCell)					
R	R	$P_{CMAX,c}$ 1					
P	V	PH (Type 1, PCell)					
R	R	$P_{CMAX,c}$ 2					
P	V	PH (Type 1, SCell 1)					
R	R	$P_{CMAX,c}$ 3					
...							
P	V	PH (Type 1, SCell n)					
R	R	$P_{CMAX,c}$ m					

Figure 6.1.3.6a-2: Extended PHR MAC Control Element

C_7	C_6	C_5	C_4	C_3	C_2	C_1	R
P	V	PH (Type 2, PCell)					
R	R	$P_{CMAX,c}$ 1					
P	V	PH (Type 2, PUCCH SCell)					
R	R	$P_{CMAX,c}$ 2					
P	V	PH (Type 1, PCell)					
R	R	$P_{CMAX,c}$ 3					
P	V	PH (Type 1, SCell 1)					
R	R	$P_{CMAX,c}$ 4					
...							
P	V	PH (Type 1, SCell n)					
R	R	$P_{CMAX,c}$ m					

Figure 6.1.3.6a1-3: Extended PHR MAC Control Element supporting PUCCH on SCell

ASUS EX2033
Samsung v. ASUS
IPR2024-00614

C_7	C_6	C_5	C_4	C_3	C_2	C_1	R
C_{15}	C_{14}	C_{13}	C_{12}	C_{11}	C_{10}	C_9	C_8
C_{23}	C_{22}	C_{21}	C_{20}	C_{19}	C_{18}	C_{17}	C_{16}
C_{31}	C_{30}	C_{29}	C_{28}	C_{27}	C_{26}	C_{25}	C_{24}
P	V	PH (Type 2, PCell)					
R	R	$P_{CMAX,c}$ 1					
P	V	PH (Type 1, PCell)					
R	R	$P_{CMAX,c}$ 2					
P	V	PH (Type 1, SCell 1)					
R	R	$P_{CMAX,c}$ 3					
...							
P	V	PH (Type 1, SCell n)					
R	R	$P_{CMAX,c}$ m					

Figure 6.1.3.6a2-4: Extended PHR MAC Control Element supporting 32 serving cells with configured uplink

C_7	C_6	C_5	C_4	C_3	C_2	C_1	R
C_{15}	C_{14}	C_{13}	C_{12}	C_{11}	C_{10}	C_9	C_8
C_{23}	C_{22}	C_{21}	C_{20}	C_{19}	C_{18}	C_{17}	C_{16}
C_{31}	C_{30}	C_{29}	C_{28}	C_{27}	C_{26}	C_{25}	C_{24}
P	V	PH (Type 2, PCell)					
R	R	$P_{CMAX,c}$ 1					
P	V	PH (Type 2, PUCCH SCell)					
R	R	$P_{CMAX,c}$ 2					
P	V	PH (Type 1, PCell)					
R	R	$P_{CMAX,c}$ 3					
P	V	PH (Type 1, SCell 1)					
R	R	$P_{CMAX,c}$ 4					
...							
P	V	PH (Type 1, SCell n)					
R	R	$P_{CMAX,c}$ m					

Figure 6.1.3.6a3-5: Extended PHR MAC Control Element supporting 32 serving cells with configured uplink and PUCCH on SCell

ASUS EX2033
Samsung v. ASUS
IPR2024-00614

Table 6.1.3.6a-1: Nominal UE transmit power level for Extended PHR and for Dual Connectivity PHR

$P_{CMAX,c}$	Nominal UE transmit power level
0	PCMAX_C_00
1	PCMAX_C_01
2	PCMAX_C_02
…	…
61	PCMAX_C_61
62	PCMAX_C_62
63	PCMAX_C_63

6.1.3.6b Dual Connectivity Power Headroom Report MAC Control Element

The Dual Connectivity Power Headroom Report (PHR) MAC control element is identified by a MAC PDU subheader with LCID as specified in table 6.2.1-2. It has a variable size and is defined in Figure 6.1.3.6b-1 and Figure 6.1.3.6b-2. One octet with C_i fields is used for indicating the presence of PH per SCell when the highest *SCellIndex* of SCell with configured uplink is less than 8, otherwise four octets are used. When Type 2 PH is reported for the PCell, the octet containing the Type 2 PH field is included first after the octet(s) indicating the presence of PH per cell (PSCell and all SCells of all MAC entities) and followed by an octet containing the associated $P_{CMAX,c}$ field (if reported). Then after that, when Type 2 PH is reported for the PSCell, the octet containing the Type 2 PH field is included followed by an octet containing the associated $P_{CMAX,c}$ field (if reported). Then follows in ascending order based on the *ServCellIndex* [8] an octet with the Type 1 PH field and an octet with the associated $P_{CMAX,c}$ field (if reported), for the PCell and for all other serving cells of all MAC entities indicated in the bitmap.

The Dual Connectivity PHR MAC Control Element is defined as follows:

- C_i: this field indicates the presence of a PH field for the serving cell of any MAC entity, except the PCell, with *SCellIndex* i as specified in [8]. The C_i field set to "1" indicates that a PH field for the serving cell with *SCellIndex* i is reported. The C_i field set to "0" indicates that a PH field for the serving cell with *SCellIndex* i is not reported;

- R: reserved bit, set to "0";

- V: this field indicates if the PH value is based on a real transmission or a reference format. For Type 1 PH, V=0 indicates real transmission on PUSCH and V=1 indicates that a PUSCH reference format is used. For Type 2 PH, V=0 indicates real transmission on PUCCH and V=1 indicates that a PUCCH reference format is used. Furthermore, for both Type 1 and Type 2 PH, V=0 indicates the presence of the octet containing the associated $P_{CMAX,c}$ field, and V=1 indicates that the octet containing the associated $P_{CMAX,c}$ field is omitted;

- Power Headroom (PH): this field indicates the power headroom level. The length of the field is 6 bits. The reported PH and the corresponding power headroom levels are shown in Table 6.1.3.6-1 (the corresponding measured values in dB can be found in subclause 9.1.8.4 of [9]);

- P: this field indicates whether power backoff due to power management is applied (as allowed by $P\text{-}MPR_c$ [10]). The MAC entity shall set P=1 if the corresponding $P_{CMAX,c}$ field would have had a different value if no power backoff due to power management had been applied;

- $P_{CMAX,c}$: if present, this field indicates the $P_{CMAX,c}$ or $\widetilde{P}_{CMAX,c}$ [2] used for calculation of the preceding PH field. The reported $P_{CMAX,c}$ and the corresponding nominal UE transmit power levels are shown in Table 6.1.3.6a-1 (the corresponding measured values in dBm can be found in subclause 9.6.1 of [9]).

ASUS EX2033
Samsung v. ASUS
IPR2024-00614

C_7	C_6	C_5	C_4	C_3	C_2	C_1	R
P	V	PH (Type 2, PCell)					
R	R	$P_{CMAX,c}$ 1					
P	V	PH (Type 2, PSCell)					
R	R	$P_{CMAX,c}$ 2					
P	V	PH (Type 1, PCell)					
R	R	$P_{CMAX,c}$ 3					
P	V	PH (Type 1, Serving Cell 1)					
R	R	$P_{CMAX,c}$ 4					
...							
P	V	PH (Type 1, Serving Cell n)					
R	R	$P_{CMAX,c}$ m					

Figure 6.1.3.6b-1: Dual Connectivity PHR MAC Control Element

C_7	C_6	C_5	C_4	C_3	C_2	C_1	R
C_{15}	C_{14}	C_{13}	C_{12}	C_{11}	C_{10}	C_9	C_8
C_{23}	C_{22}	C_{21}	C_{20}	C_{19}	C_{18}	C_{17}	C_{16}
C_{31}	C_{30}	C_{29}	C_{28}	C_{27}	C_{26}	C_{25}	C_{24}
P	V	PH (Type 2, PCell)					
R	R	$P_{CMAX,c}$ 1					
P	V	PH (Type 2, PSCell)					
R	R	$P_{CMAX,c}$ 2					
P	V	PH (Type 1, PCell)					
R	R	$P_{CMAX,c}$ 3					
P	V	PH (Type 1, Serving Cell 1)					
R	R	$P_{CMAX,c}$ 4					
...							
P	V	PH (Type 1, Serving Cell n)					
R	R	$P_{CMAX,c}$ m					

Figure 6.1.3.6b-2: Dual Connectivity PHR MAC Control Element supporting 32 serving cells with configured uplink

6.1.3.7 MCH Scheduling Information MAC Control Element

The MCH Scheduling Information MAC Control Element illustrated in Figure 6.1.3.7-1 is identified by a MAC PDU subheader with LCID as specified in Table 6.2.1-4. This control element has a variable size. For each MTCH the fields below are included:

ASUS EX2033
Samsung v. ASUS
IPR2024-00614

- LCID: this field indicates the Logical Channel ID of the MTCH. The length of the field is 5 bits;
- Stop MTCH: this field indicates the ordinal number of the subframe within the MCH scheduling period, counting only the subframes allocated to the MCH, where the corresponding MTCH stops. Value 0 corresponds to the first subframe. The length of the field is 11 bits. The special Stop MTCH value 2047 indicates that the corresponding MTCH is not scheduled. The value range 2043 to 2046 is reserved.

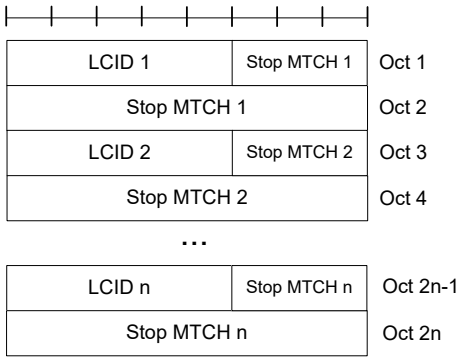

Figure 6.1.3.7-1: MCH Scheduling Information MAC control element

6.1.3.7a Extended MCH Scheduling Information MAC Control Element

The Extended MCH Scheduling Information MAC control element illustrated in Figure 6.1.3.7-2 is identified by a MAC PDU subheader with LCID as specified in Table 6.2.1-4. This control element has a variable size.

For each MTCH the fields below are included:

- LCID: this field indicates the Logical Channel ID of the MTCH. The length of the field is 5 bits;
- Stop MTCH: this field indicates the ordinal number of the subframe within the MCH scheduling period, counting only the subframes allocated to the MCH, where the corresponding MTCH stops. Value 0 corresponds to the first subframe. The length of the field is 11 bits. The special Stop MTCH value 2047 indicates that the corresponding MTCH is not scheduled. The value range 2043 to 2046 is reserved.

For each MTCH the fields below may be included:

- LCID: this field indicates the Logical Channel ID of the MTCH. The length of the field is 5 bits. LCIDs x…x+y shall be equal to or a subset of the LCIDs 1…n;
- S: this field indicates that the transmission of the corresponding MTCH is to be suspended. The S field is set to 000. All other values are reserved.

ASUS EX2033
Samsung v. ASUS
IPR2024-00614

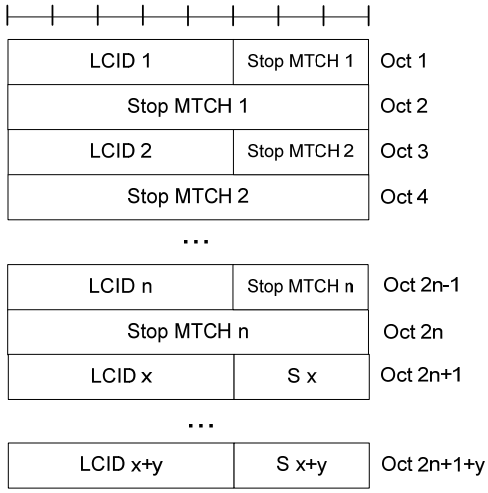

Figure 6.1.3.7a-1: Extended MCH Scheduling Information MAC control element

6.1.3.8 Activation/Deactivation MAC Control Elements

The Activation/Deactivation MAC control element of one octet is identified by a MAC PDU subheader with LCID as specified in table 6.2.1-1. It has a fixed size and consists of a single octet containing seven C-fields and one R-field. The Activation/Deactivation MAC control element with one octet is defined as follows (figure 6.1.3.8-1).

The Activation/Deactivation MAC control element of four octets is identified by a MAC PDU subheader with LCID as specified in table 6.2.1-1. It has a fixed size and consists of a four octets containing 31 C-fields and one R-field. The Activation/Deactivation MAC control element of four octets is defined as follows (figure 6.1.3.8-2).

For the case with no serving cell with a *ServCellIndex* [8] larger than 7, Activation/Deactivation MAC control element of one octet is applied, otherwise Activation/Deactivation MAC control element of four octets is applied.

- C_i: if there is an SCell configured with *SCellIndex* i as specified in [8], this field indicates the activation/deactivation status of the SCell with *SCellIndex* i, else the MAC entity shall ignore the C_i field. The C_i field is set to "1" to indicate that the SCell with *SCellIndex* i shall be activated. The C_i field is set to "0" to indicate that the SCell with *SCellIndex* i shall be deactivated;

- R: Reserved bit, set to “0”.

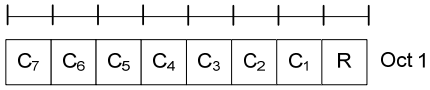

Figure 6.1.3.8-1: Activation/Deactivation MAC control element of one octet

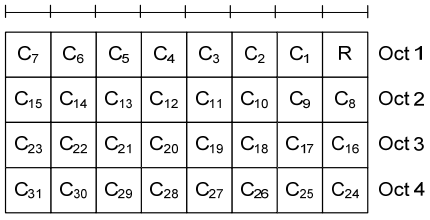

Figure 6.1.3.8-2: Activation/Deactivation MAC control element of four octets

6.1.3.9 Long DRX Command MAC Control Element

The Long DRX Command MAC control element is identified by a MAC PDU subheader with LCID as specified in table 6.2.1-1.

ASUS EX2033
Samsung v. ASUS
IPR2024-00614

It has a fixed size of zero bits.

6.1.3.10 Data Volume and Power Headroom Report MAC Control Element

The Data Volume and Power Headroom Report (DPR) MAC control element is identified by the MAC PDU subheader used for the CCCH MAC SDU, as specified in table 6.2.1-2. It does not add any additional subheader and is always placed before the CCCH MAC SDU.

It has a fixed size and consists of a single octet defined as follows (figure 6.1.3.10-1):

- Data Volume (DV): The Data Volume field identifies the total amount of data available across all logical channels and of data not yet associated with a logical channel after all MAC PDUs for the TTI have been built. The amount of data is indicated in number of bytes. It shall include all data that is available for transmission in the RLC layer, in the PDCP layer, and in the RRC layer; the definition of what data shall be considered as available for transmission is specified in [3], [4] and [8] respectively. The size of the RLC and MAC headers are not considered in the buffer size computation. The length of this field is 4 bits. The values taken by the Data Volume field are shown in Table 6.1.3.10-1;

- Power Headroom (PH): This field indicates the power headroom level. The length of the field is 2 bits. The reported PH and the corresponding power headroom levels are shown in Table 6.1.3.10-2 below (the corresponding measured values in dB can be found in [9]);

- R: reserved bit, set to "0".

Figure 6.1.3.10-1: Data Volume and Power Headroom Report MAC control element

Table 6.1.3.10-1: Data Volume levels for DV

Index	Data Volume (DV) value [bytes]	Index	Data Volume (DV) value [bytes]
0	DV = 0	8	67 < DV <= 91
1	0 < DV <= 10	9	91 < DV <= 125
2	10 < DV <= 14	10	125 < DV <= 171
3	14 < DV <= 19	11	171 < DV <= 234
4	19 < DV <= 26	12	234 < DV <= 321
5	26 < DV <= 36	13	321 < DV <= 768
6	36 < DV <= 49	14	768 < DV <= 1500
7	49 < DV <= 67	15	DV > 1500

Table 6.1.3.10-2: Power Headroom levels for PH

PH	Power Headroom Level
0	POWER_HEADROOM_0
1	POWER_HEADROOM_1
2	POWER_HEADROOM_2
3	POWER_HEADROOM_3

6.1.3.11 SPS confirmation MAC Control Element

The SPS confirmation MAC control element is identified by a MAC PDU subheader with LCID as specified in table 6.2.1-2.

It has a fixed size of zero bits.

ASUS EX2033
Samsung v. ASUS
IPR2024-00614

6.1.4 MAC PDU (transparent MAC)

A MAC PDU consists solely of a MAC Service Data Unit (MAC SDU) whose size is aligned to a TB; as described in figure 6.1.4-1. This MAC PDU is used for transmissions on PCH, BCH, DL-SCH including BCCH, BR-BCCH, SL-DCH and SL-BCH.

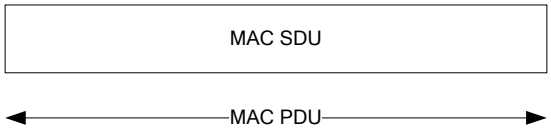

Figure 6.1.4-1: Example of MAC PDU (transparent MAC)

6.1.5 MAC PDU (Random Access Response)

A MAC PDU consists of a MAC header and zero or more MAC Random Access Responses (MAC RAR) and optionally padding as described in figure 6.1.5-4.

The MAC header is of variable size.

A MAC PDU header consists of one or more MAC PDU subheaders; each subheader corresponding to a MAC RAR except for the Backoff Indicator subheader. If included, the Backoff Indicator subheader is only included once and is the first subheader included within the MAC PDU header.

A MAC PDU subheader consists of the three header fields E/T/RAPID (as described in figure 6.1.5-1) but for the Backoff Indicator subheader which consists of the five header field E/T/R/R/BI (as described in figure 6.1.5-2).

A MAC RAR consists of the four fields R/Timing Advance Command/UL Grant/Temporary C-RNTI (as described in figures 6.1.5-3 and 6.1.5-3a). For BL UEs and UEs in enhanced coverage in enhanced coverage level 2 or 3 (see subclause 6.2 in [2]) the MAC RAR in figure 6.1.5-3a is used, otherwise the MAC RAR in figure 6.1.5-3 is used.

Padding may occur after the last MAC RAR. Presence and length of padding is implicit based on TB size, size of MAC header and number of RARs.

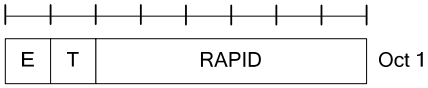

Figure 6.1.5-1: E/T/RAPID MAC subheader

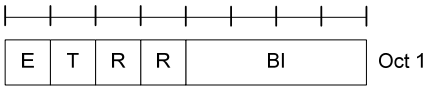

Figure 6.1.5-2: E/T/R/R/BI MAC subheader

ASUS EX2033
Samsung v. ASUS
IPR2024-00614

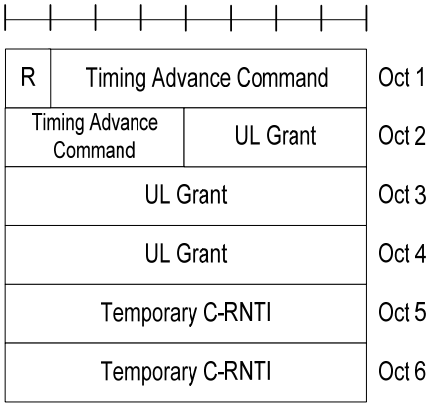

Figure 6.1.5-3: MAC RAR

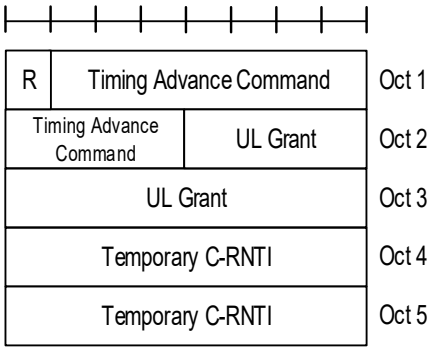

Figure 6.1.5-3a: MAC RAR for PRACH enhanced coverage level 2 or 3

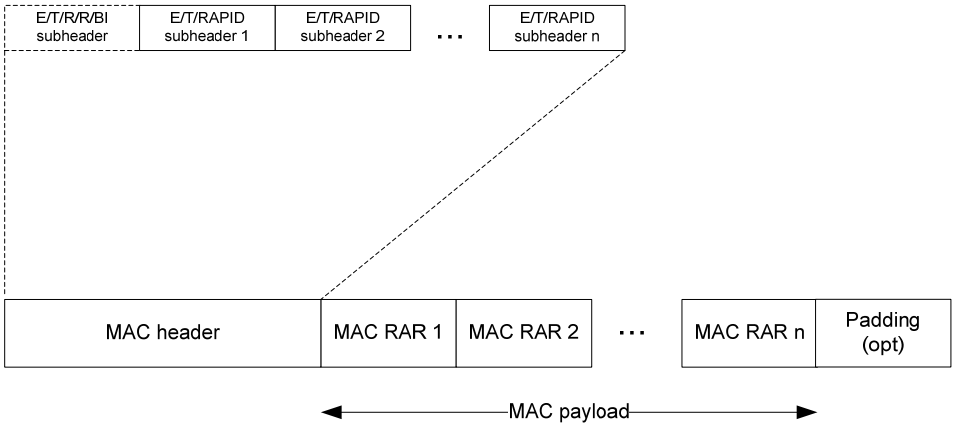

Figure 6.1.5-4: Example of MAC PDU consisting of a MAC header and MAC RARs

6.1.6 MAC PDU (SL-SCH)

A MAC PDU consists of a MAC header, one or more MAC Service Data Units (MAC SDU), and optionally padding; as described in Figure 6.1.6-4.

Both the MAC header and the MAC SDUs are of variable sizes.

A MAC PDU header consists of one SL-SCH subheader, one or more MAC PDU subheaders; each subheader except SL-SCH subheader corresponds to either a MAC SDU or padding.

ASUS EX2033
Samsung v. ASUS
IPR2024-00614

The SL-SCH subheader consists of the seven header fields V/R/R/R/R/SRC/DST.

A MAC PDU subheader consists of the six header fields R/R/E/LCID/F/L but for the last subheader in the MAC PDU. The last subheader in the MAC PDU consists solely of the four header fields R/R/E/LCID. A MAC PDU subheader corresponding to padding consists of the four header fields R/R/E/LCID.

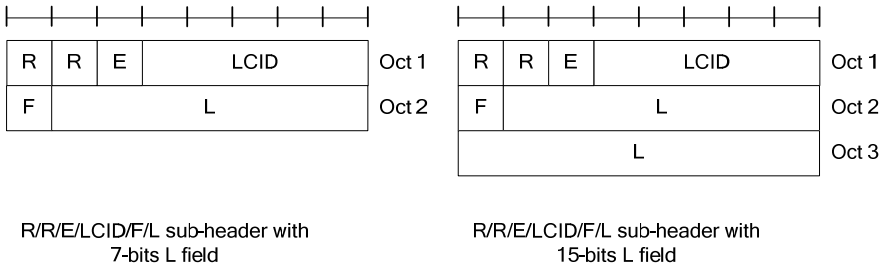

Figure 6.1.6-1: R/R/E/LCID/F/L MAC subheader

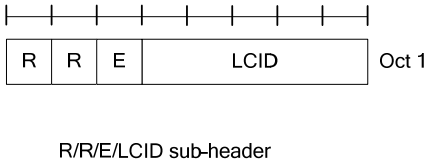

Figure 6.1.6-2: R/R/E/LCID MAC subheader

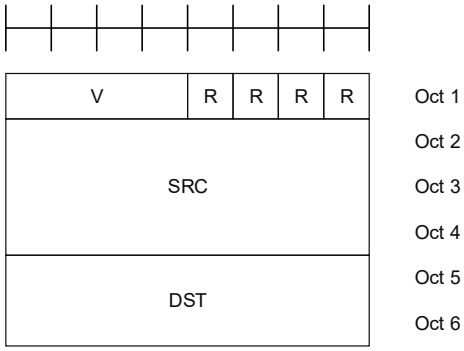

Figure 6.1.6-3: SL-SCH MAC subheader for V ="0001" and "0010"

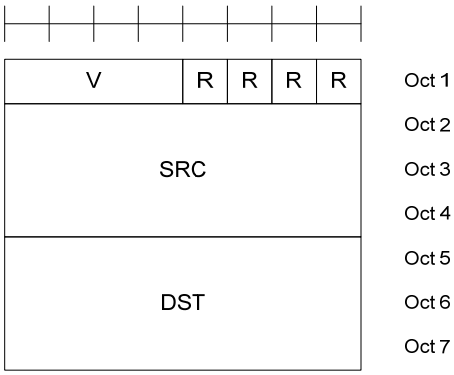

Figure 6.1.6-3a: SL-SCH MAC subheader for V="0011"

MAC PDU subheaders have the same order as the corresponding MAC SDUs and padding.

ASUS EX2033
Samsung v. ASUS
IPR2024-00614

Padding occurs at the end of the MAC PDU, except when single-byte or two-byte padding is required. Padding may have any value and the MAC entity shall ignore it. When padding is performed at the end of the MAC PDU, zero or more padding bytes are allowed.

When single-byte or two-byte padding is required, one or two MAC PDU subheaders corresponding to padding are placed after the SL-SCH subheader and before any other MAC PDU subheader.

A maximum of one MAC PDU can be transmitted per TB.

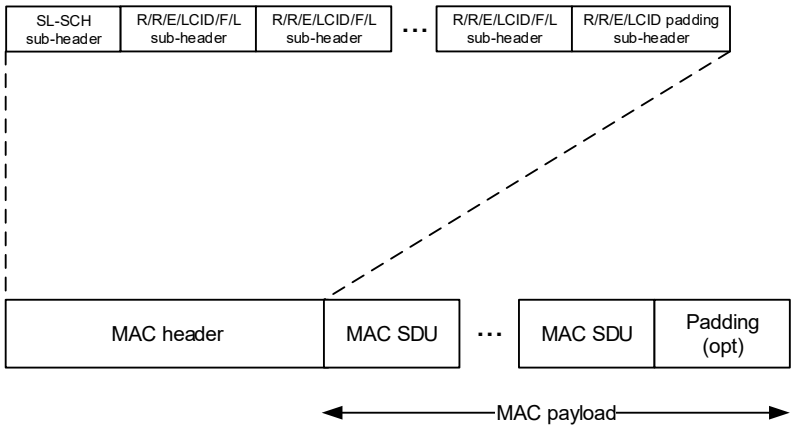

Figure 6.1.6-4: Example of MAC PDU consisting of MAC header, MAC SDUs and padding

6.2 Formats and parameters

6.2.1 MAC header for DL-SCH, UL-SCH and MCH

The MAC header is of variable size and consists of the following fields:

- LCID: The Logical Channel ID field identifies the logical channel instance of the corresponding MAC SDU or the type of the corresponding MAC control element or padding as described in tables 6.2.1-1, 6.2.1-2 and 6.2.1-4 for the DL-SCH, UL-SCH and MCH respectively. There is one LCID field for each MAC SDU, MAC control element or padding included in the MAC PDU. In addition to that, one or two additional LCID fields are included in the MAC PDU, when single-byte or two-byte padding is required but cannot be achieved by padding at the end of the MAC PDU. A UE of Category 0 [12] shall indicate CCCH using LCID "01011", otherwise the UE shall indicate CCCH using LCID "00000". The LCID field size is 5 bits;

- L: The Length field indicates the length of the corresponding MAC SDU or variable-sized MAC control element in bytes. There is one L field per MAC PDU subheader except for the last subheader and subheaders corresponding to fixed-sized MAC control elements. The size of the L field is indicated by the F field and F2 field;

- F: The Format field indicates the size of the Length field as indicated in table 6.2.1-3. There is one F field per MAC PDU subheader except for the last subheader and subheaders corresponding to fixed-sized MAC control elements and except for when F2 is set to 1. The size of the F field is 1 bit. If the F field is included; if the size of the MAC SDU or variable-sized MAC control element is less than 128 bytes, the value of the F field is set to 0, otherwise it is set to 1;

- F2: The Format2 field indicates the size of the Length field as indicated in table 6.2.1-3. There is one F2 field per MAC PDU subheader. The size of the F2 field is 1 bit. If the size of the MAC SDU or variable-sized MAC control element is larger than 32767 bytes, and if the corresponding subheader is not the last subheader, the value of the F2 field is set to 1, otherwise it is set to 0.

- E: The Extension field is a flag indicating if more fields are present in the MAC header or not. The E field is set to "1" to indicate another set of at least R/F2/E/LCID fields. The E field is set to "0" to indicate that either a MAC SDU, a MAC control element or padding starts at the next byte;

ASUS EX2033
Samsung v. ASUS
IPR2024-00614

- R: Reserved bit, set to "0".

The MAC header and subheaders are octet aligned.

Table 6.2.1-1 Values of LCID for DL-SCH

Index	LCID values
00000	CCCH
00001-01010	Identity of the logical channel
01011-10111	Reserved
11000	Activation/Deactivation (4 octets)
11001	SC-MCCH, SC-MTCH (see note)
11010	Long DRX Command
11011	Activation/Deactivation (1 octet)
11100	UE Contention Resolution Identity
11101	Timing Advance Command
11110	DRX Command
11111	Padding
NOTE: Both SC-MCCH and SC-MTCH cannot be multiplexed with other logical channels in the same MAC PDU except for Padding	

For NB-IoT only the following LCID values for DL-SCH are applicable: CCCH, Identity of the logical channel, UE Contention Resolution Identity, Timing Advance Command, DRX Command and Padding.

Table 6.2.1-2 Values of LCID for UL-SCH

Index	LCID values
00000	CCCH
00001-01010	Identity of the logical channel
01011	CCCH
01100-10100	Reserved
10101	SPS confirmation
10110	Truncated Sidelink BSR
10111	Sidelink BSR
11000	Dual Connectivity Power Headroom Report
11001	Extended Power Headroom Report
11010	Power Headroom Report
11011	C-RNTI
11100	Truncated BSR
11101	Short BSR
11110	Long BSR
11111	Padding

For NB-IoT only the following LCID values for UL-SCH are applicable: CCCH (LCID "00000"), Identity of the logical channel, C-RNTI, Short BSR and Padding.

Table 6.2.1-3 Values of F and F2 fields:

Index of F2	Index of F	Size of Length field (in bits)
0	0	7
	1	15
1	-	16

ASUS EX2033
Samsung v. ASUS
IPR2024-00614

Table 6.2.1-4 Values of LCID for MCH

Index	LCID values
00000	MCCH (see note)
00001-11100	MTCH
11101	Reserved
11110	MCH Scheduling Information or Extended MCH Scheduling Information
11111	Padding
NOTE: If there is no MCCH on MCH, an MTCH could use this value.	

6.2.2 MAC header for Random Access Response

The MAC header is of variable size and consists of the following fields:

- E: The Extension field is a flag indicating if more fields are present in the MAC header or not. The E field is set to "1" to indicate at least another set of E/T/RAPID fields follows. The E field is set to "0" to indicate that a MAC RAR or padding starts at the next byte;
- T: The Type field is a flag indicating whether the MAC subheader contains a Random Access ID or a Backoff Indicator. The T field is set to “0” to indicate the presence of a Backoff Indicator field in the subheader (BI). The T field is set to “1” to indicate the presence of a Random Access Preamble ID field in the subheader (RAPID);
- R: Reserved bit, set to "0";
- BI: The Backoff Indicator field identifies the overload condition in the cell. The size of the BI field is 4 bits;
- RAPID: The Random Access Preamble IDentifier field identifies the transmitted Random Access Preamble (see subclause 5.1.3). The size of the RAPID field is 6 bits.

The MAC header and subheaders are octet aligned.

NOTE: For NB-IoT, the Random Access Preamble IDentifier field corresponds to the start subcarrier index.

6.2.3 MAC payload for Random Access Response

The MAC RAR is of fixed size and consists of the following fields:

- R: Reserved bit, set to "0";
- Timing Advance Command: The Timing Advance Command field indicates the index value T_A (0, 1, 2… 1282) used to control the amount of timing adjustment that the MAC entity has to apply (see subclause 4.2.3 of [2]). The size of the Timing Advance Command field is 11 bits;
- UL Grant: The Uplink Grant field indicates the resources to be used on the uplink (see subclause 6.2 of [2]). The size of the UL Grant field is 20 bits, except for BL UEs and UEs in enhanced coverage in enhanced coverage level 2 or 3, where the size of the UL grant field is 12 bits.
- Temporary C-RNTI: The Temporary C-RNTI field indicates the temporary identity that is used by the MAC entity during Random Access. The size of the Temporary C-RNTI field is 16 bits.

The MAC RAR is octet aligned.

6.2.4 MAC header for SL-SCH

The MAC header is of variable size and consists of the following fields:

- V: The MAC PDU format version number field indicates which version of the SL-SCH subheader is used. In this version of the specification three format versions are defined, and this field shall therefore be set to "0001", "0010", and "0011". If the DST field is 24 bits this field shall be set to "0011". The V field size is 4 bits;

ASUS EX2033
Samsung v. ASUS
IPR2024-00614

- SRC: The Source Layer-2 ID field carries the identity of the source. It is set to the ProSe UE ID. The SRC field size is 24 bits;
- DST: The DST field can be 16 bits or 24 bits. If it is 16 bits, it carries the 16 most significant bits of the Destination Layer-2 ID. If it is 24 bits, it is set to the Destination Layer-2 ID. For sidelink communication, the Destination Layer-2 ID is set to the ProSe Layer-2 Group ID or Prose UE ID. For V2X sidelink communication, the Destination Layer-2 ID is set to the identifier provided by upper layers as defined in [14]. If the V field is set to "0001", this identifier is a groupcast identifier. If the V field is set to "0010", this identifier is a unicast identifier;
- LCID: The Logical Channel ID field uniquely identifies the logical channel instance within the scope of one Source Layer-2 ID and Destination Layer-2 ID pair of the corresponding MAC SDU or padding as described in table 6.2.4-1. There is one LCID field for each MAC SDU or padding included in the MAC PDU. In addition to that, one or two additional LCID fields are included in the MAC PDU, when single-byte or two-byte padding is required but cannot be achieved by padding at the end of the MAC PDU. The LCID field size is 5 bits;
- L: The Length field indicates the length of the corresponding MAC SDU in bytes. There is one L field per MAC PDU subheader except for the last subheader. The size of the L field is indicated by the F field;
- F: The Format field indicates the size of the Length field as indicated in table 6.2.4-2. There is one F field per MAC PDU subheader except for the last subheader. The size of the F field is 1 bit. If the size of the MAC SDU is less than 128 bytes, the value of the F field is set to 0, otherwise it is set to 1;
- E: The Extension field is a flag indicating if more fields are present in the MAC header or not. The E field is set to "1" to indicate another set of at least R/R/E/LCID fields. The E field is set to "0" to indicate that either a MAC SDU or padding starts at the next byte;
- R: Reserved bit, set to "0".

The MAC header and subheaders are octet aligned.

Table 6.2.4-1 Values of LCID for SL-SCH

Index	LCID values
00000	Reserved
00001-01010	Identity of the logical channel
01011-11011	Reserved
11100	PC5-S messages that are not protected
11101	PC5-S messages "Direct Security Mode Command" and "Direct Security Mode Complete"
11110	Other PC5-S messages that are protected
11111	Padding

Table 6.2.4-2 Values of F field:

Index	Size of Length field (in bits)
0	7
1	15

7 Variables and constants

7.1 RNTI values

RNTI values are presented in Table 7.1-1 and their usage and associated Transport Channels and Logical Channels are presented in Table 7.1-2.

ASUS EX2033
Samsung v. ASUS
IPR2024-00614

Table 7.1-1: RNTI values.

Value (hexa-decimal)	RNTI
0000	N/A
0001-0960	RA-RNTI, C-RNTI, Semi-Persistent Scheduling C-RNTI, Temporary C-RNTI, eIMTA-RNTI, TPC-PUCCH-RNTI, TPC-PUSCH-RNTI, SL-RNTI (see note), G-RNTI and SL-D-RNTI
0961-FFF3	C-RNTI, Semi-Persistent Scheduling C-RNTI, eIMTA-RNTI, Temporary C-RNTI, TPC-PUCCH-RNTI, TPC-PUSCH-RNTI, SL-RNTI, G-RNTI and SL-D-RNTI
FFF4-FFF9	Reserved for future use
FFFA	SC-N-RNTI
FFFB	SC-RNTI
FFFC	CC-RNTI
FFFD	M-RNTI
FFFE	P-RNTI
FFFF	SI-RNTI

NOTE: A MAC entity uses the same C-RNTI on all Serving Cells.

Table 7.1-2: RNTI usage.

RNTI	Usage	Transport Channel	Logical Channel
P-RNTI	Paging and System Information change notification	PCH	PCCH
SI-RNTI	Broadcast of System Information	DL-SCH	BCCH, BR-BCCH
M-RNTI	MCCH Information change notification	N/A	N/A
RA-RNTI	Random Access Response	DL-SCH	N/A
eIMTA-RNTI	eIMTA TDD UL/DL configuration notification	N/A	N/A
Temporary C-RNTI	Contention Resolution (when no valid C-RNTI is available)	DL-SCH	CCCH
Temporary C-RNTI	Msg3 transmission	UL-SCH	CCCH, DCCH, DTCH
C-RNTI	Dynamically scheduled unicast transmission	UL-SCH	DCCH, DTCH
C-RNTI	Dynamically scheduled unicast transmission	DL-SCH	CCCH, DCCH, DTCH
C-RNTI	Triggering of PDCCH ordered random access	N/A	N/A
Semi-Persistent Scheduling C-RNTI	Semi-Persistently scheduled unicast transmission (activation, reactivation and retransmission)	DL-SCH, UL-SCH	DCCH, DTCH
Semi-Persistent Scheduling C-RNTI	Semi-Persistently scheduled unicast transmission (deactivation)	N/A	N/A
TPC-PUCCH-RNTI	Physical layer Uplink power control	N/A	N/A
TPC-PUSCH-RNTI	Physical layer Uplink power control	N/A	N/A
SL-RNTI	Dynamically scheduled sidelink transmission for sidelink communication	SL-SCH	STCH
SC-RNTI	Dynamically scheduled SC-PTM control information	DL-SCH	SC-MCCH
G-RNTI	Dynamically scheduled SC-PTM transmission	DL-SCH	SC-MTCH
SC-N-RNTI	SC-MCCH Information change notification	N/A	N/A
CC-RNTI	Providing common control PDCCH information	N/A	N/A
SL-D-RNTI	Dynamically scheduled sidelink transmission for V2X sidelink communication	SL-SCH	STCH

7.2 Backoff Parameter values

Backoff Parameter values are presented in Table 7.2-1 except for NB-IoT where Table 7.2-2 shall be used.

ASUS EX2033
Samsung v. ASUS
IPR2024-00614

Table 7.2-1: Backoff Parameter values.

Index	Backoff Parameter value (ms)
0	0
1	10
2	20
3	30
4	40
5	60
6	80
7	120
8	160
9	240
10	320
11	480
12	960
13	Reserved
14	Reserved
15	Reserved

The reserved values of the backoff parameter if received by the current release version UEs shall be taken as 960 ms.

Table 7.2-2: Backoff Parameter values for NB-IoT.

Index	Backoff Parameter value (ms)
0	0
1	256
2	512
3	1024
4	2048
5	4096
6	8192
7	16384
8	32768
9	65536
10	131072
11	262144
12	524288
13	Reserved
14	Reserved
15	Reserved

The reserved values of the backoff parameter if received by the current release version NB-IoT UEs shall be taken as 524288 ms.

ASUS EX2033
Samsung v. ASUS
IPR2024-00614

7.3 PRACH Mask Index values

Table 7.3-1: PRACH Mask Index values

PRACH Mask Index	Allowed PRACH (FDD)	Allowed PRACH (TDD)
0	All	All
1	PRACH Resource Index 0	PRACH Resource Index 0
2	PRACH Resource Index 1	PRACH Resource Index 1
3	PRACH Resource Index 2	PRACH Resource Index 2
4	PRACH Resource Index 3	PRACH Resource Index 3
5	PRACH Resource Index 4	PRACH Resource Index 4
6	PRACH Resource Index 5	PRACH Resource Index 5
7	PRACH Resource Index 6	Reserved
8	PRACH Resource Index 7	Reserved
9	PRACH Resource Index 8	Reserved
10	PRACH Resource Index 9	Reserved
11	Every, in the time domain, even PRACH opportunity 1st PRACH Resource Index in subframe	Every, in the time domain, even PRACH opportunity 1st PRACH Resource Index in subframe
12	Every, in the time domain, odd PRACH opportunity 1st PRACH Resource Index in subframe	Every, in the time domain, odd PRACH opportunity 1st PRACH Resource Index in subframe
13	Reserved	1st PRACH Resource Index in subframe
14	Reserved	2nd PRACH Resource Index in subframe
15	Reserved	3rd PRACH Resource Index in subframe

7.4 Subframe_Offset values

Subframe_Offset values are presented in Table 7.4-1.

Table 7.4-1: Subframe_Offset values

TDD UL/DL configuration	Position of initial Semi-Persistent grant	Subframe_Offset value (ms)
0	N/A	0
1	Subframes 2 and 7	1
	Subframes 3 and 8	-1
2	Subframe 2	5
	Subframe 7	-5
3	Subframes 2 and 3	1
	Subframe 4	-2
4	Subframe 2	1
	Subframe 3	-1
5	N/A	0
6	N/A	0

7.5 TTI_BUNDLE_SIZE value

The parameter TTI_BUNDLE_SIZE is 4.

7.6 DELTA_PREAMBLE values

The DELTA_PREAMBLE preamble format based power offset values are presented in Table 7.6-1.

ASUS EX2033
Samsung v. ASUS
IPR2024-00614

Table 7.6-1: DELTA_PREAMBLE values.

Preamble Format	DELTA_PREAMBLE value
0	0 dB
1	0 dB
2	-3 dB
3	-3 dB
4	8 dB

Where the Preamble Format is given by *prach-ConfigIndex* [7].

7.7 HARQ RTT Timers

For each serving cell, in case of FDD configuration and in case of Frame Structure Type 3 configuration on the serving cell which carries the HARQ feedback for this serving cell the HARQ RTT Timer is set to 8 subframes. For each serving cell, in case of TDD configuration on the serving cell which carries the HARQ feedback for this serving cell the HARQ RTT Timer is set to k + 4 subframes, where k is the interval between the downlink transmission and the transmission of associated HARQ feedback, as indicated in subclauses 10.1 and 10.2 of [2], and for an RN configured with *rn-SubframeConfig* [8] and not suspended, as indicated in Table 7.5.1-1 of [11].

For BL UEs and UEs in enhanced coverage, HARQ RTT Timer corresponds to 7 + N where N is the used PUCCH repetition factor, where only valid (configured) UL subframes as configured by upper layers in *fdd-UplinkSubframeBitmapBR* are counted. In case of TDD, HARQ RTT Timer corresponds to 3 + k + N, where k is the interval between the last repetition of downlink transmission and the first repetition of the transmission of associated HARQ feedback, and N is the used PUCCH repetition factor, where only valid UL subframes are counted as indicated in subclauses 10.1 and 10.2 of [2].

For NB-IoT the HARQ RTT Timer is set to k+3+N+deltaPDCCH subframes, where k is the interval between the last subframe of the downlink transmission and the first subframe of the associated HARQ feedback transmission and N is the transmission duration in subframes of the associated HARQ feedback, and deltaPDCCH is the interval from the last subframe of the associated HARQ feedback transmission plus 3 subframes to the first subframe of the next PDCCH occasion.

Except for NB-IoT, UL HARQ RTT Timer length is set to 4 subframes for FDD and Frame Structure Type 3, and set to $k_{ULHARQRTT}$ subframes for TDD, where $k_{ULHARQRTT}$ equals to the k_{PHICH} value indicated in Table 9.1.2-1 of [2].

For NB-IoT, the UL HARQ RTT timer length is set to 4+deltaPDCCH subframes, where deltaPDCCH is the interval from the last subframe of the PUSCH transmission plus 4 subframes to the first subframe of the next PDCCH occasion.

7.8 DL_REPETITION_NUMBER value

The parameter DL_REPETITION_NUMBER value is received from lower layers and corresponds to the repetition level as specified in [2].

7.9 UL_REPETITION_NUMBER value

The parameter UL_REPETITION_NUMBER value is received from lower layers and corresponds to the repetition level as specified in [2].

ASUS EX2033
Samsung v. ASUS
IPR2024-00614

Annex A (normative): Handling of measurement gaps

In this specification, the subframes which cannot be used for transmission according to subclause 8.1.2.1 of [9] are also considered as part of measurement gaps in uplink. Measurement gaps are defined in [9].

In a subframe that is part of a measurement gap, the UE shall not perform the transmission of HARQ feedback and CQI/PMI/RI/PTI/CRI, and SRS shall not be reported.

ASUS EX2033
Samsung v. ASUS
IPR2024-00614

Annex B (normative): Contention resolution for RACH access

When checking whether contention resolution was successful a MAC entity considers the MAC header structures shown below for the processing of a MAC PDU containing a UE Contention Resolution Identity MAC control element.

R	R	E	LCID (11100)

Case 1: MAC subheader for MAC control element

R	R	E	LCID (11100)
R	R	E	LCID (00000)

Case 2: MAC subheader for MAC control element + MAC subheader for MAC SDU (CCCH)

R	R	E	LCID (11111)
R	R	E	LCID (11100)
R	R	E	LCID (00000)

Case 3: MAC subheader for single-byte padding + MAC subheader for MAC control element + MAC subheader for MAC SDU (CCCH)

R	R	E	LCID (11111)
R	R	E	LCID (11111)
R	R	E	LCID (11100)
R	R	E	LCID (00000)

Case 4: MAC subheaders for two-byte padding + MAC subheader for MAC control element + MAC subheader for MAC SDU (CCCH)

R	R	E	LCID (11100)
R	R	E	LCID (00000)
F	L		
R	R	E	LCID (11111)

Case 5: MAC subheader for MAC control element + MAC subheader (7-bits L-field) for MAC SDU (CCCH) + MAC subheader for padding

R	R	E	LCID (11100)
R	R	E	LCID (00000)
F	L		
L			
R	R	E	LCID (11111)

Case 6: MAC subheader for MAC control element + MAC subheader (15-bits L-field) for MAC SDU (CCCH) + MAC subheader for padding

ASUS EX2033
Samsung v. ASUS
IPR2024-00614

Annex C (informative): Intended UE behaviour for DRX Timers

When a DRX timer is set to a value of X, and n denotes the subframe in which the related event is triggered according to the subclause 5.7, the intended behaviours of each DRX timer are presented in the Table C-1 below:

Table C-1: Intended UE behaviour for DRX timers

DRX Timers	Intended UE behaviour ([x, y] means including subframe x and y)
drx-InactivityTimer	The MAC entity monitors PDCCH in PDCCH-subframes during the subframes [n+1, n+m]. The MAC entity starts or restarts drxShortCycleTimer, and uses Short DRX Cycle in the subframe n+m+1, if configured.
drx-InactivityTimerSCPTM	The MAC entity monitors PDCCH in PDCCH-subframes during the subframes [n+1, n+m].
mac-ContentionResolutionTimer or mac-ContentionResolutionTimer for the corresponding enhanced coverage level, if it exists	The MAC entity monitors PDCCH in PDCCH-subframes during the subframes [n+1, n+X].
drx-RetransmissionTimer or drx-ULRetransmissionTimer	The MAC entity monitors PDCCH in PDCCH-subframes during the subframes [n, n+m-1].
onDurationTimer or onDurationTimerSCPTM	The MAC entity monitors PDCCH in PDCCH-subframes during the subframes [n, n+m-1].
drxShortCycleTimer	The MAC entity uses the Short DRX Cycle during the subframes [n, n+X-1]. The MAC entity starts to use the Long DRX Cycle in the subframe n+X.
HARQ RTT Timer	The MAC entity starts drx-RetransmissionTimer in the subframe n+X, if needed.
UL HARQ RTT Timer	The MAC entity starts drx-ULRetransmissionTimer in the subframe n+X, if needed.
NOTE: For FDD, m is equal to X; for TDD, m is equal to the minimum number of subframes so that X PDCCH-subframes are included during the subframes [x, y]. NOTE: A MAC entity configured with eIMTA monitors PDCCH in some subframe(s) in addition to PDCCH-subframes, as specified in subclause 5.7.	

For drx-InactivityTimerSCPTM, drx-InactivityTimer, drx-RetransmissionTimer and drx-ULRetransmissionTimer, if X=0, the timer does not make the MAC entity to monitor the PDCCH.

ASUS EX2033
Samsung v. ASUS
IPR2024-00614

Annex D (informative): Change history

Change history							
Date	**TSG #**	**TSG Doc.**	**CR**	**Rev**	**Subject/Comment**	**Old**	**New**
2007-06	RAN2#58 bis	R2-072710			MAC Protocol Specification Baseline	-	
2007-06	RAN2#58 bis	R2-072912			Text Proposal for UL HARQ (Tdoc R2-072708) Text Proposal for DL HARQ (Tdoc R2-072707) Text Proposal for RACH procedure (Tdoc R2-072640) Text Proposal for Logical Channel prioritization (Tdoc R2-072643)		0.1.0
2007-06	RAN2#58 bis	R2-072994			Basic MAC PDU structure (Tdoc R2-072983) with updates Agreements on time-frequency resource configuration (Tdoc R2-072993) Agreement on RA-RNTI association (Tdoc R2-072993) Clarification on RA Response reception (Tdoc R2-072993)	0.1.0	0.1.1
2007-08	RAN2#59	R2-073715			Removed reference to non-existing table (Tdoc R2-073473) Incorrect mapping of logical to transport channel (Tdoc R2-073473) Un-necessary error checking in HARQ process procedure (Tdoc R2-073473) Removal of reference to timing relation for HARQ feedback (Tdoc R2-073473) Correction of Internal variable name (Tdoc R2-073473) Correction of procedure in case of successful HARQ reception (Tdoc R2-073473)	0.1.1	0.2.0
2007-09	RAN2#59	R2-073885			Text proposal for Random Access procedure Text proposal on HARQ clarification for TDD Text proposal on HARQ for grants	0.2.0	0.2.1
2007-09	RAN#37	RP-070688			Clean version for information	0.2.1	1.0.0
2007-10	RAN2#59 bis	R2-074530			Editorial update with Editor's notes (Tdoc R2-074211).	1.0.0	1.1.0
2007-11	RAN2#60	R2-075093			Agreements on MAC PDU format (R2-074536) Corrections on Random Access Procedure (R2-074536)	1.1.0	1.1.1
2007-11	RAN2#60	R2-075243			Endorsement of v1.1.1 Removal of FFS on DL CCCH existence	1.1.1	1.2.0
2007-11	RAN2#60	R2-075488			Agreement on identity used Random Access Response (R2-075038) Agreement on Local Nack1 (R2-074949) PUCCH Resource handling (R2-075432) UL HARQ agreements (R2-075432) Agreements on semi-persistent scheduling (R2-075432, 36.300) Agreements on BSR/SR triggers (R2-075432) Agreements on BSR contents (R2-075432) Agreements on Timing Advance principles (36.300) Agreements on DRX control (36.300) Handling of P-BCH, D-BCH, PCH (R2-075246)	1.2.0	1.3.0
2007-11	RP-38	RP-070917			Clean version, presented at TSG RAN-38 for approval	1.3.0	2.0.0
2007-12	RP-38	-			Approved at TSG RAN-38 and placed under change control	2.0.0	8.0.0
2008-03	RP-39	RP-080162	0001	2	CR to 36.321 with E-UTRA MAC protocol specification update	8.0.0	8.1.0
2008-05	RP-40	RP-080410	0002	1	36.321 CR covering agreements of RAN2 #61bis and RAN2#62	8.1.0	8.2.0
2008-09	RP-41	RP-080690	0003	-	Clarification on data available for transmission for BSR triggering	8.2.0	8.3.0
	RP-41	RP-080690	0004	-	CR to 36.321 on failure indication after maximum number of HARQ transmissions	8.2.0	8.3.0
	RP-41	RP-080690	0005	4	Clarifications and Corrections of DL and UL Data Transfer (SCH, RACH and SR)	8.2.0	8.3.0
	RP-41	RP-080690	0006	-	CR to 36.321 on Buffer size levels for BSR	8.2.0	8.3.0
	RP-41	RP-080690	0007	-	Clarifications on DRX	8.2.0	8.3.0
	RP-41	RP-080690	0008	-	Clarification on UE behavior for DRX and configured measurement gaps	8.2.0	8.3.0
	RP-41	RP-080690	0009	3	Correction to MAC Padding BSR	8.2.0	8.3.0
	RP-41	RP-080690	0010	-	Correction to UE transmission power headroom report for LTE	8.2.0	8.3.0
	RP-41	RP-080690	0011	-	Corrections on BSR	8.2.0	8.3.0
	RP-41	RP-080690	0012	-	CR to 36.321 REL-8 on Format of UL grant in Message 2	8.2.0	8.3.0
	RP-41	RP-080690	0015	-	CR to 36.321 REL-8 on PUSCH PUCCH Power Control RNTIs	8.2.0	8.3.0
	RP-41	RP-080690	0016	-	CR to 36.321 REL-8 on RACH uniform random backoff	8.2.0	8.3.0
	RP-41	RP-080690	0017	1	E-UTRA MAC protocol specification update	8.2.0	8.3.0
	RP-41	RP-080690	0020	-	TP for number of HARQ processes and MIMO	8.2.0	8.3.0
	RP-41	RP-080690	0022	-	Update of MAC dedicated preamble expiry	8.2.0	8.3.0

ASUS EX2033
Samsung v. ASUS
IPR2024-00614

	RP-41	RP-080690	0027	-	Handling of Semi-Persistent grants and assignments	8.2.0	8.3.0
	RP-41	RP-080690	0051	1	Corrections relating to RACH	8.2.0	8.3.0
	RP-41	RP-080690	0058	1	UL Channel Prioritisation	8.2.0	8.3.0
	RP-41	RP-080690	0071	2	Corrections relating to RACH partitioning	8.2.0	8.3.0
	RP-41	RP-080690	0091	-	Correction on Random Access Response reception behaviour	8.2.0	8.3.0
	RP-41	RP-080690	0103	-	Upper limit of logical channel id	8.2.0	8.3.0
	RP-41	RP-080690	0104	-	Clarifications and Corrections for HARQ operation at TAT expiry and RACH contention resolution	8.2.0	8.3.0
2008-12	RP-42	RP-081018	0105	-	CR0105 to 36.321 [Rel-8] on PHR Periodic Timer Start	8.3.0	8.4.0
	RP-42	RP-081018	0106	1	Proposed R1 of CR0106 to 36.321 [Rel-8] on PHR Reference	8.3.0	8.4.0
	RP-42	RP-081018	0107	1	CR 0107 to 36.321 Interactions between measurement gap and Msg3 transmission	8.3.0	8.4.0
	RP-42	RP-081018	0108	2	Proposed R1 of CR0108 to 36.321 [Rel-8] on PHR Reporting Values	8.3.0	8.4.0
	RP-42	RP-081018	0109	-	Correction relating to equal priorities	8.3.0	8.4.0
	RP-42	RP-081018	0110	-	CR 0110 to 36.321 on Correction to PHR	8.3.0	8.4.0
	RP-42	RP-081018	0112	1	CR0112r1 to 36.321 [Rel-8] Correction to BCCH Reception procedure	8.3.0	8.4.0
	RP-42	RP-081018	0113	-	Contention Resolution Timer	8.3.0	8.4.0
	RP-42	RP-081018	0114	-	PCH reception	8.3.0	8.4.0
	RP-42	RP-081018	0115	-	Correction to reception of assignments and grants	8.3.0	8.4.0
	RP-42	RP-081018	0116	-	Correction on Contention Resolution	8.3.0	8.4.0
	RP-42	RP-081018	0117	2	Proposed R1 of CR0117 to 36.321 [Rel-8] on on SR Clarifications and Repetitions	8.3.0	8.4.0
	RP-42	RP-081078	0118	2	Clarification on Padding value	8.3.0	8.4.0
	RP-42	RP-081018	0119	-	CR 0119 to 36.321 Correction and Clarification on TTI Bundling	8.3.0	8.4.0
	RP-42	RP-081018	0120	1	Clarification of DRX Active Time	8.3.0	8.4.0
	RP-42	RP-081018	0121	4	Text Proposal for Dedicated Preamble Assignment	8.3.0	8.4.0
	RP-42	RP-081018	0122	-	CR0122 to 36.321 [Rel-8] on Message 3 Definition	8.3.0	8.4.0
	RP-42	RP-081018	0123	1	Correction to prevent wrong contention resolution by adaptive retransmission command	8.3.0	8.4.0
	RP-42	RP-081018	0124	-	Bucket Size Parameter	8.3.0	8.4.0
	RP-42	RP-081018	0125	2	CR0125r2 to 36.321 [Rel-8] Correction to Multiple BSR	8.3.0	8.4.0
	RP-42	RP-081018	0127	-	CR0127 to 36.321 [Rel-8] RACH preambles labelling	8.3.0	8.4.0
	RP-42	RP-081018	0128	1	CR0128r1 to 36.321 [Rel-8] merging CR0126r0 and CR0128r0	8.3.0	8.4.0
	RP-42	RP-081018	0129	1	CR0129r1 to 36.321 [Rel-8] Correction to PDU Format	8.3.0	8.4.0
	RP-42	RP-081018	0130	-	CQI/ SRS/PMI/RI transmission during active time	8.3.0	8.4.0
	RP-42	RP-081018	0131	1	NDI and Msg4 Carrying Contention Resolution ID	8.3.0	8.4.0
	RP-42	RP-081018	0132	1	CR0132 to 36.321 [Rel-8] on MAC BSR trigger	8.3.0	8.4.0
	RP-42	RP-081018	0133	-	Clarification about Restarting the Periodic BSR Timer	8.3.0	8.4.0
	RP-42	RP-081018	0134	-	Correction to RA procedure initiated by eNB PDCCH order	8.3.0	8.4.0
	RP-42	RP-081018	0135	1	Correction on PHR triggering condition	8.3.0	8.4.0
	RP-42	RP-081018	0136	-	CR 0136 to 36.321 on Correction to UL HARQ Process for the transmission of Msg3	8.3.0	8.4.0
	RP-42	RP-081018	0137	2	SPS occasions	8.3.0	8.4.0
	RP-42	RP-081018	0138	-	Robustness of Buffer Status Reporting	8.3.0	8.4.0
	RP-42	RP-081018	0139	-	Proposed CR to 36.321 [Rel-8] on UL HARQ and Measurement Gaps	8.3.0	8.4.0
	RP-42	RP-081018	0142	1	TAT and RACH procedure	8.3.0	8.4.0
	RP-42	RP-081018	0143	1	SRS and CQI Resources Release upon TAT Expiry	8.3.0	8.4.0
	RP-42	RP-081018	0157	1	Proposed CR to 36.321 Correction to RACH procedure	8.3.0	8.4.0
	RP-42	RP-081018	0162	1	BSR format for reporting empty buffers	8.3.0	8.4.0
	RP-42	RP-081018	0165	-	TTI Bundling Configuration	8.3.0	8.4.0
	RP-42	RP-081018	0166	1	Corrections to semi-persistent scheduling	8.3.0	8.4.0
	RP-42	RP-081018	0167	2	Priotitization of MAC control elements	8.3.0	8.4.0
	RP-42	RP-081018	0168	-	Correction to starting of TA timer	8.3.0	8.4.0
	RP-42	RP-081018	0173	1	Proposed CR to 36.321 SPS implicit release on UL	8.3.0	8.4.0
	RP-42	RP-081018	0174	-	Proposed CR to 36.321 Measurement gaps and SPS	8.3.0	8.4.0
	RP-42	RP-081018	0175	-	Proposed CR to 36.321 Setting reserved bits to zero	8.3.0	8.4.0
	RP-42	RP-081018	0185	-	Proposed CR to 36.321 [Rel-8] MAC ResetReconfig Option 2	8.3.0	8.4.0
	RP-42	RP-081018	0188	2	RV setting	8.3.0	8.4.0
	RP-42	RP-081018	0189	-	Corrections to Random Access Procedure	8.3.0	8.4.0
	RP-42	RP-081018	0198	-	Number of HARQ processes for MIMO	8.3.0	8.4.0
	RP-42	RP-081018	0201	-	Corrections to power control and random access	8.3.0	8.4.0
	RP-42	RP-081018	0206	-	Correction on the definition of the PDCCH-subframe	8.3.0	8.4.0
	RP-42	RP-081018	0211	1	Correction to the coexist of SPS-RNTI and SI-RNTI or RA-RNTI	8.3.0	8.4.0
	RP-42	RP-081018	0220	-	Explicit release of SPS	8.3.0	8.4.0
	RP-42	RP-081018	0225	2	Linking HARQ process ID with the SPS resource	8.3.0	8.4.0
	RP-42	RP-081018	0231	-	Bucket Parameter Update	8.3.0	8.4.0
	RP-42	RP-081018	0232	1	Clarification on “PDCCH indicates a new transmission” for DRX	8.3.0	8.4.0
	RP-42	RP-081018	0233	1	Editorial corrections to MAC	8.3.0	8.4.0
	RP-42	RP-081018	0236	-	RB suspension and BSR contents	8.3.0	8.4.0

ASUS EX2033
Samsung v. ASUS
IPR2024-00614

	RP-42	RP-081018	0239	-	RV setting	8.3.0	8.4.0
	RP-42	RP-081018	0240	2	Preamble group selection	8.3.0	8.4.0
	RP-42	RP-081018	0241	-	Use of dedicated preambles after HO complete	8.3.0	8.4.0
	RP-42	RP-081018	0242	-	Introduction of HARQ RTT Timer	8.3.0	8.4.0
	RP-42	RP-081018	0243	-	Correction to DRX configuration	8.3.0	8.4.0
2009-03	RP-43	RP-090128	0245	-	CR to 36.321 on BSR clarification	8.4.0	8.5.0
	RP-43	RP-090128	0246	2	Freeing of reserved RNTIs	8.4.0	8.5.0
	RP-43	RP-090128	0247	-	Correction to MAC reset	8.4.0	8.5.0
	RP-43	RP-090128	0248	-	Correction to Initialization of Prioritization	8.4.0	8.5.0
	RP-43	RP-090128	0249	-	Local NACKing Optionality MAC CR	8.4.0	8.5.0
	RP-43	RP-090128	0250	1	Position of the Backoff Indicator subheader	8.4.0	8.5.0
	RP-43	RP-090128	0251	-	Missing reserved bit setting	8.4.0	8.5.0
	RP-43	RP-090128	0252	-	Expired TAT and PUSCH transmission	8.4.0	8.5.0
	RP-43	RP-090128	0253	-	Expired TAT and HARQ feedback	8.4.0	8.5.0
	RP-43	RP-090128	0254	1	Counter proposal to R2-090969 on Management for HARQ buffer with TAT	8.4.0	8.5.0
	RP-43	RP-090128	0255	-	HARQ Feedback and Contention Resolution	8.4.0	8.5.0
	RP-43	RP-090128	0256	-	Corrections to redundancy version control for system information	8.4.0	8.5.0
	RP-43	RP-090128	0257	-	Mapping of the RNTIs to different transport channels	8.4.0	8.5.0
	RP-43	RP-090128	0258	-	DRX and UL Retransmissions	8.4.0	8.5.0
	RP-43	RP-090128	0259	-	Definition of DRX Short Cycle Timer	8.4.0	8.5.0
	RP-43	RP-090128	0260	-	Small corrections to RACH	8.4.0	8.5.0
	RP-43	RP-090128	0261	-	Processing of contention resolution message	8.4.0	8.5.0
	RP-43	RP-090128	0262	-	Corrections to power control and random access	8.4.0	8.5.0
	RP-43	RP-090128	0263	-	Missing condition for unsuccessful reception of Msg2	8.4.0	8.5.0
	RP-43	RP-090128	0264	1	Corrections relating to Random Access required inputs	8.4.0	8.5.0
	RP-43	RP-090128	0265	-	Bucket Parameter Update	8.4.0	8.5.0
	RP-43	RP-090128	0266	2	Correction to Handling of triggered PHR	8.4.0	8.5.0
	RP-43	RP-090128	0267	-	SPS resource release on D-SR failure	8.4.0	8.5.0
	RP-43	RP-090128	0269	2	NDI handling when measurement gap and SPS occassion collide	8.4.0	8.5.0
	RP-43	RP-090128	0270	-	Correction relating to PDCCH order	8.4.0	8.5.0
	RP-43	RP-090128	0271	-	Error Handling	8.4.0	8.5.0
	RP-43	RP-090128	0272	-	Various clarifications/corrections to TS36.321	8.4.0	8.5.0
	RP-43	RP-090128	0273	1	Disassembly, Demultiplexing and Multiplexing functions	8.4.0	8.5.0
	RP-43	RP-090128	0274	1	Miscellaneous corrections to MAC	8.4.0	8.5.0
	RP-43	RP-090128	0275	2	CR on Interactions between Msg3 transmission and TTI bundling	8.4.0	8.5.0
	RP-43	RP-090128	0276	-	TTI Bundling	8.4.0	8.5.0
	RP-43	RP-090128	0278	1	Correction to BSR trigger at serving cell change	8.4.0	8.5.0
	RP-43	RP-090128	0279	1	Correction to Release of SPS	8.4.0	8.5.0
	RP-43	RP-090128	0280	2	Usage of RRC Parameters	8.4.0	8.5.0
	RP-43	RP-090128	0281	-	Clarification of MAC Timer status	8.4.0	8.5.0
	RP-43	RP-090128	0282	1	Correction on MAC PDU subheader description	8.4.0	8.5.0
	RP-43	RP-090128	0283	1	UE behaviour at CURRENT_TX_NB reaches maximum value	8.4.0	8.5.0
	RP-43	RP-090128	0285	-	Reporting During DRX	8.4.0	8.5.0
	RP-43	RP-090128	0289	-	NDI handling after random access procedure	8.4.0	8.5.0
	RP-43	RP-090128	0290	1	Dedicated preamble handling after random access failure	8.4.0	8.5.0
	RP-43	RP-090128	0292	-	NDI and grant in Message 2	8.4.0	8.5.0
	RP-43	RP-090128	0293	1	Correction relating to BCCH HARQ	8.4.0	8.5.0
	RP-43	RP-090128	0300	1	Corrections to Msg3 definition and usage	8.4.0	8.5.0
	RP-43	RP-090128	0303	-	PRACH selection must use prach-ConfigurationIndex	8.4.0	8.5.0
	RP-43	RP-090128	0305	-	Clarification on RETX_BSR_TIMER	8.4.0	8.5.0
	RP-43	RP-090128	0307	3	MAC Structure in UE Side	8.4.0	8.5.0
	RP-43	RP-090128	0308	-	Clarification on Random Access Procedure	8.4.0	8.5.0
	RP-43	RP-090128	0314	-	Clarification on the CR timer	8.4.0	8.5.0
	RP-43	RP-090128	0316	-	Correction on BSR	8.4.0	8.5.0
	RP-43	RP-090128	0318	1	Clarification on MAC reconfiguration of timers and counters	8.4.0	8.5.0
	RP-43	RP-090128	0320	-	HARQ feedback, CQI/PMI/RI and SRS transmissions and measurement gaps	8.4.0	8.5.0
	RP-43	RP-090128	0324	-	MAC PDU subheader corresponding to padding	8.4.0	8.5.0
	RP-43	RP-090128	0333	-	CR On Backoff table	8.4.0	8.5.0
	RP-43	RP-090128	0334	3	TTI Bundling Operation	8.4.0	8.5.0
	RP-43	RP-090128	0341	1	Enforcing new transmission after flushing HARQ process	8.4.0	8.5.0
2009-06	RP-44	RP-090513	0342	-	Correction on HARQ feedback transmission	8.5.0	8.6.0
	RP-44	RP-090513	0343	1	Clarification on the DL assignment/UL grant reception in SPS	8.5.0	8.6.0
	RP-44	RP-090513	0344	1	PHR timer handling after handover	8.5.0	8.6.0
	RP-44	RP-090513	0346	2	MAC PDU for Msg2	8.5.0	8.6.0
	RP-44	RP-090513	0347	2	MAC Error handling	8.5.0	8.6.0
	RP-44	RP-090513	0348	-	Correction on SR cancellation	8.5.0	8.6.0
	RP-44	RP-090513	0349	1	Correction to RETX_BSR_TIMER	8.5.0	8.6.0
	RP-44	RP-090513	0350	1	CR to 36.321 on UL SPS Implicit Release	8.5.0	8.6.0
	RP-44	RP-090513	0351	2	Various correction to MAC	8.5.0	8.6.0

ASUS EX2033
Samsung v. ASUS
IPR2024-00614

	RP-44	RP-090513	0369	-	Correction to Uplink grant by temporary C-RNTI	8.5.0	8.6.0
	RP-44	RP-090513	0370	-	Clarification on simultaneous reception of RA-RNTI and C-RNTI	8.5.0	8.6.0
	RP-44	RP-090513	0374	-	Correction on timeAlignmentTimer validity in MAC	8.5.0	8.6.0
	RP-44	RP-090513	0376	1	CR for MAC padding	8.5.0	8.6.0
	RP-44	RP-090513	0377	-	Correction to duplicate reception of TA command (2nd method)	8.5.0	8.6.0
2009-09	RP-45	RP-090906	0379	-	Correction to NDI semantics	8.6.0	8.7.0
	RP-45	RP-090906	0380	1	Minor corrections to 36.321	8.6.0	8.7.0
	RP-45	RP-090906	0381	2	UE behaviour when MBSFN subframe and a configured downlink assignment collide	8.6.0	8.7.0
	RP-45	RP-090906	0399	-	Correction to HARQ process ID for DL SPS retransmissions	8.6.0	8.7.0
2009-09	RP-45	RP-090934	0390	3	Improvement of cancellation of SR	8.7.0	9.0.0
	RP-45	RP-090934	0396	-	Periodic CQI/PMI/RI masking	8.7.0	9.0.0
2009-12	RP-46	RP-091341	0401	2	Capturing MBMS agreements in MAC	9.0.0	9.1.0
	RP-46	RP-091314	0403	2	Clarification on BSR trigger	9.0.0	9.1.0
	RP-46	RP-091346	0404	-	Correction on HARQ Process ID for DL SPS and DRX	9.0.0	9.1.0
	RP-46	RP-091314	0406	-	RNTI for CCCH	9.0.0	9.1.0
	RP-46	RP-091346	0407	1	SR prohibit mechanism for UL SPS	9.0.0	9.1.0
	RP-46	RP-091346	0409	-	Clarification on monitoring of PDCCH	9.0.0	9.1.0
	RP-46	RP-091346	0410	-	Introduction of SR prohibit timer	9.0.0	9.1.0
2010-03	RP-47	RP-100305	0414	-	Correction to MBMS scheduling terminology	9.1.0	9.2.0
	RP-47	RP-100305	0415	-	Corrections to TS 36.321 on MBMS	9.1.0	9.2.0
	RP-47	RP-100305	0421	1	Error handling for MBMS PDU	9.1.0	9.2.0
	RP-47	RP-100308	0422	-	Renaming CR as consequence of ASN.1 review	9.1.0	9.2.0
2010-06	RP-48	RP-100536	0424	-	Clarification on UE behaviour w.r.t DRX cycle change and onDurationTimer test (Procedural change)	9.2.0	9.3.0
	RP-48	RP-100554	0425	1	Correction to MBMS description	9.2.0	9.3.0
	RP-48	RP-100556	0426	-	Correction to PHR triggering	9.2.0	9.3.0
	RP-48	RP-100536	0430	-	Processing of contention resolution message	9.2.0	9.3.0
2010-12	RP-50	RP-101226	0436	2	Introduction of Carrier Aggregation	9.3.0	10.0.0
	RP-50	RP-101228	0437	1	Introduction of relays in MAC	9.3.0	10.0.0
	RP-50	RP-101225	0447	-	HARQ operation for UL multiple antenna transmission	9.3.0	10.0.0
2011-03	RP-51	RP-110280	0449	-	PHR Trigger for Power Reduction Due to Power Management	10.0.0	10.1.0
	RP-51	RP-110289	0450	1	Power Headroom Reporting	10.0.0	10.1.0
	RP-51	RP-110289	0451	-	Cancellation of BSR	10.0.0	10.1.0
	RP-51	RP-110289	0453	1	Counterproposal to Corrections to the Carrier Aggregation functionality in MAC	10.0.0	10.1.0
	RP-51	RP-110280	0454	-	Adding a Power Management indication in PHR	10.0.0	10.1.0
	RP-51	RP-110289	0457	2	CR on SCell Activation	10.0.0	10.1.0
	RP-51	RP-110289	0461	2	Unification of Extended PHR MAC CE formats	10.0.0	10.1.0
	RP-51	RP-110289	0465	1	Clarification for CA and TTI bundling in MAC	10.0.0	10.1.0
2011-06	RP-52	RP-110846	0466	-	CQI reporting and deactivation timer	10.1.0	10.2.0
	RP-52	RP-110846	0467	2	Miscellaneous Corrections	10.1.0	10.2.0
	RP-52	RP-110846	0468	-	Pcmax,c reporting for type 2 PH	10.1.0	10.2.0
	RP-52	RP-110848	0469	-	Type-1-triggered SRS transmission independent of DRX	10.1.0	10.2.0
	RP-52	RP-110839	0470	-	UL transmissions when the timeAlignmentTimer is not running	10.1.0	10.2.0
	RP-52	RP-110846	0478	1	Clarifications to Ci field in MAC CE on CA	10.1.0	10.2.0
	RP-52	RP-110846	0488	-	Clarification of padding BSR behaviour	10.1.0	10.2.0
	RP-52	RP-110834	0489	-	SPS reception in MBSFN subframes	10.1.0	10.2.0
	RP-52	RP-110839	0490	-	Power management related PHR triggering condition	10.1.0	10.2.0
	RP-52	RP-110839	0491	-	Clarifications on PHR Power Management trigger	10.1.0	10.2.0
2011-09	RP-53	RP-111280	0494	1	Clarifications on MCH reception and Stop MTCH	10.2.0	10.3.0
	RP-53	RP-111283	0496	-	Configuration of extenededBSR-sizes	10.2.0	10.3.0
	RP-53	RP-111297	0502	-	CR to 36.321 on Small correction of PHR parameter	10.2.0	10.3.0
	RP-53	RP-111283	0503	1	Corrections to PCMAX,c field in Extended PHR	10.2.0	10.3.0
2011-12	RP-54	RP-111714	0516	1	UE soft buffer handling in MAC	10.3.0	10.4.0
	RP-54	RP-111716	0523	-	Correction on determining SPS occasions	10.3.0	10.4.0
	RP-54	RP-111605	0526	1	CSI/SRS reporting at DRX state transitions	10.3.0	10.4.0
	RP-54	RP-111606	0527	-	CSI/SRS reporting at unexpected Active Time stopping	10.3.0	10.4.0
2012-03	RP-55	RP-120321	0539	-	Correction to multiplexing and assembly	10.4.0	10.5.0
2012-09	RP-57	RP-121395	0559	-	P bit in Extended PHR MAC CE	10.5.0	10.6.0
	RP-57	RP-121395	0577	1	Deadlock of PHR transmission	10.5.0	10.6.0
	RP-57	RP-121382	0558	-	Clarification on Measurement Gap	10.5.0	11.0.0
	RP-57	RP-121377	0572	1	Introduction of CA Enhancements in MAC	10.5.0	11.0.0
	RP-57	RP-121382	0581	-	Clarification of TA value maintenance at TA timer expiry	10.5.0	11.0.0
2012-12	RP-58	RP-121936	0583	-	Clarification on DRX for Relay	11.0.0	11.1.0
	RP-58	RP-121936	0585	-	Clarification on V field in Extended PHR MAC CE	11.0.0	11.1.0
	RP-58	RP-121951	0586	1	Clarification related to CA enhancement in MAC	11.0.0	11.1.0
	RP-58	RP-121957	0588	-	Clarification of the Note in 5.2	11.0.0	11.1.0
	RP-58	RP-121951	0590	-	TAG Acronym	11.0.0	11.1.0
	RP-58	RP-121951	0594	-	Corrections for CA-enhancement in MAC	11.0.0	11.1.0
	RP-58	RP-121956	0599	-	CR on MAC layer support of ePDCCH	11.0.0	11.1.0

ASUS EX2033
Samsung v. ASUS
IPR2024-00614

	RP-58	RP-121957	0624	2	CR to 36.321 on Annex for DRX Timers	11.0.0	11.1.0
2013-03	RP-59	RP-130248	0629	2	Removing optionality on CSI/SRS transmission during transient state	11.1.0	11.2.0
	RP-59	RP-130245	0630	-	Clarification on the PDCCH-subframe for half-duplex TDD UE	11.1.0	11.2.0
	RP-59	RP-130248	0649	-	Draft CR to 36 321 for Clarification of PDCCH-subframe definition in Rel-11	11.1.0	11.2.0
	RP-59	RP-130241	0659	-	Correction for TM10 unicast support in MBSFN subframes	11.1.0	11.2.0
	RP-59	RP-130291	0661	-	Clarification of DRX timers for TDD	11.1.0	11.2.0
2013-06	RP-60	RP-130805	0663	2	HARQ RTT Timer	11.2.0	11.3.0
	RP-60	RP-130808	0664	-	Clarification on the PDCCH-subframe definition for TDD UE	11.2.0	11.3.0
	RP-60	RP-130809	0665	-	Correction to the definition of drxRetransmissionTimer	11.2.0	11.3.0
	RP-60	RP-130809	0667	-	Further issues on removing optionality of CSI/SRS transmission during transient state	11.2.0	11.3.0
	RP-60	RP-130804	0670	-	Rel-11 CR on SCell activation timing	11.2.0	11.3.0
2013-12	RP-62	RP-131989	0687	-	Clarification on the HARQ feedback for SCell activation/deactivation command MAC CE	11.3.0	11.4.0
	RP-62	RP-132002	0690	-	Clarification on Power Headroom MAC CE	11.3.0	12.0.0
2014-03	RP-63	RP-140355	0709	-	BCCH reception for MBMS on any configured or configurable SCell	12.0.0	12.1.0
	RP-63	RP-140362	0705	1	Long DRX Command MAC Control Element	12.0.0	12.1.0
2014-06	RP-64	RP-140888	0714	-	Alternative 1: Introduction of FDD/TDD CA into 36.321	12.1.0	12.2.0
	RP-64	RP-140884	0713	1	Introduction of TDD eITMA	12.1.0	12.2.0
	RP-64	-	-	-	Editorial updates	12.2.0	12.2.1
2014-09	RP-65	RP-141506	0732	1	Introduction of low complexity UEs in TS 36.321	12.2.1	12.3.0
2014-12	RP-66	RP-142129	0739	-	Category 0 report in Msg3	12.3.0	12.4.0
	RP-66	RP-142140	0749	-	Correction on DRX Operation	12.3.0	12.4.0
	RP-66	RP-142140	0748	-	Prohibit timer for SR	12.3.0	12.4.0
	RP-66	RP-142135	0740	1	Introduction of dual connectivity in MAC	12.3.0	12.4.0
2015-03	RP-67	RP-150373	0751	-	Clarification on the Logical channel prioritization in DC	12.4.0	12.5.0
	RP-67	RP-150375	0762	1	Introduction of MBMS congestion management for Public Safety Group Call	12.4.0	12.5.0
	RP-67	RP-150374	0755	1	Introduction of ProSe in MAC	12.4.0	12.5.0
	RP-67	RP-150371	0763	2	Uplink transmission time difference	12.4.0	12.5.0
2015-06	RP-68	RP-150921	0764	-	SL-DCH transmission for autonomous resource allocation mode	12.5.0	12.6.0
	RP-68	RP-150921	0766	-	Minor corrections for ProSe	12.5.0	12.6.0
	RP-68	RP-150921	0767	-	Clarification on deactivation operation	12.5.0	12.6.0
	RP-68	RP-150916	0768	-	Handling of erroneous PDU on MCH	12.5.0	12.6.0
	RP-68	RP-150921	0769	-	Corrections on 36.321 for ProSe	12.5.0	12.6.0
	RP-68	RP-150921	0772	-	Correction to the figure of MAC structure overview for sidelink	12.5.0	12.6.0
	RP-68	RP-150923	0782	-	Prohibit timer for SR	12.5.0	12.6.0
	RP-68	RP-150921	0783	-	Resource selection for SL-DCH	12.5.0	12.6.0
2015-09	RP-69	RP-151438	0799	1	Correction on Type 2 PH reporting	12.6.0	12.7.0
	RP-69	RP-151441	0795	1	Corrections for reporting and cancellation of SL BSR	12.6.0	12.7.0
	RP-69	RP-151441	0785	1	Corrections to Sidelink in MAC	12.6.0	12.7.0
	RP-69	RP-151441	0790	1	Miscellaneous corrections on Sidelink	12.6.0	12.7.0
2015-12	RP-70	RP-152055	0801	-	Correction on transparent MAC PDU	12.7.0	12.8.0
	RP-70	RP-152053	0802	-	Correction on MAC header for SL-SCH	12.7.0	12.8.0
	RP-70	RP-152053	0805	-	Corrections for sidelink in TS 36.321	12.7.0	12.8.0
2015-12	RP-70	RP-152071	0811	2	Introduction of Carrier Aggregation enhancements beyond 5 CCs	12.8.0	13.0.0
	RP-70	RP-152072	0806	2	Introduction of eD2D	12.8.0	13.0.0
	RP-70	RP-152078	0821	2	Introduction of LAA in MAC	12.8.0	13.0.0
	RP-70	RP-152080	0815	2	Introduction of SC-PTM in MAC	12.8.0	13.0.0
2016-03	RP-71	RP-160470	0825	1	Power headroom reporting of carrier aggregation enhancement beyond 5 CCs	13.0.0	13.1.0
	RP-71	RP-160454	0837	1	Corrections for sidelink	13.0.0	13.1.0
	RP-71	RP-160462	0844	-	Correction to Pcmax and PH field in PHR MAC CE	13.0.0	13.1.0
	RP-71	RP-160453	0845	2	Introduction of low complexity UE and enhanced coverage features	13.0.0	13.1.0
	RP-71	RP-160467	0852	-	Maximum UL Transmission timing difference in dual connectivity	13.0.0	13.1.0
	RP-71	RP-160470	0853	1	Corrections on SC-PTM MAC specification	13.0.0	13.1.0
2016-06	RP-72	RP-161080	0854	-	Corrections to MTCe in TS 36.321	13.1.0	13.2.0
	RP-72	RP-161080	0855	1	Corrections to Logical Channel Prioritisation	13.1.0	13.2.0
	RP-72	RP-161080	0856	-	Correction to MAC procedures for MTC	13.1.0	13.2.0
	RP-72	RP-161080	0857	3	Functional extension for U-plane C-IoT optimisation	13.1.0	13.2.0
	RP-72	RP-161080	0858	2	Corrections for sidelink logical channel prioritization	13.1.0	13.2.0
	RP-72	RP-161080	0859	-	HARQ RTT Timers in eMTC	13.1.0	13.2.0
	RP-72	RP-161080	0860	-	Asynchronous UL HARQ protocol operation	13.1.0	13.2.0
	RP-72	RP-161080	0861	1	UL SPS and Sidelink discovery gap	13.1.0	13.2.0
	RP-72	RP-161080	0862	-	Correction of BCCH reception for LC-MTC	13.1.0	13.2.0
	RP-72	RP-161080	0864	1	Corrections on asynchronous UL HARQ operation	13.1.0	13.2.0
	RP-72	RP-161080	0866	-	Clarification on PDCCH sub-frame for SC-PTM	13.1.0	13.2.0
	RP-72	RP-161080	0867	-	Correction on preamble group selection and RA-RNTI value range	13.1.0	13.2.0
	RP-72	RP-161080	0868	1	Correction on DL HARQ retransmission and UL transmission repetitions within a bundle	13.1.0	13.2.0

ASUS EX2033
Samsung v. ASUS
IPR2024-00614

	RP-72	RP-161080	0869	2	Correction on IR version for UL HARQ	13.1.0	13.2.0
	RP-72	RP-161080	0870	-	Correction on HARQ process selection for UL asynchronous HARQ	13.1.0	13.2.0
	RP-72	RP-161080	0873	-	Correction to eMTC message classes and logical channels	13.1.0	13.2.0
	RP-72	RP-161080	0875	-	Correction on Random Access CE-level ramp-up for CE mode A UEs	13.1.0	13.2.0
	RP-72	RP-161080	0876	1	Correction to random access procedure for eMTC	13.1.0	13.2.0
	RP-72	RP-161080	0877	2	Minor corrections to MAC for eMTC	13.1.0	13.2.0
	RP-72	RP-161080	0878	-	PRACH preamble power for eMTC	13.1.0	13.2.0
	RP-72	RP-161080	0879	1	SPS support for eMTC UEs	13.1.0	13.2.0
	RP-72	RP-161080	0880	1	SR prohibit timer for eMTC UEs	13.1.0	13.2.0
	RP-72	RP-161080	0881	-	Starting CE level for PDCCH order and HO	13.1.0	13.2.0
	RP-72	RP-161080	0882	-	Clarification on RA-RNTI determination for PRACH in TDD	13.1.0	13.2.0
	RP-72	RP-161081	0883	4	Introduction of NB-IoT to 36.321	13.1.0	13.2.0
	RP-72	RP-161080	0884	2	Correction on the DRX operation for UL asynchronous HARQ	13.1.0	13.2.0
	RP-72	RP-161080	0885	-	Corrections on Support of CRI reporting in MAC	13.1.0	13.2.0
	RP-72	RP-161080	0886	-	Correction on the intended UE behaviour for DRX Timers	13.1.0	13.2.0
2016-09	RP-73	RP-161752	0887	1	Corrections to Destination Indexing	13.2.0	13.3.0
	RP-73	RP-161755	0888	2	Clarification on BCCH reception for eMTC	13.2.0	13.3.0
	RP-73	RP-161762	0889	1	Clarification on DRX in SC-PTM	13.2.0	13.3.0
	RP-73	RP-161753	0893	-	DRX operation for LAA cells	13.2.0	13.3.0
	RP-73	RP-161752	0901	2	Correction to Sidelink Discovery Gap for Transmission	13.2.0	13.3.0
	RP-73	RP-161755	0902	1	Clarification on RA preamble groups for eMTC	13.2.0	13.3.0
	RP-73	RP-161758	0907	2	Correction on MAC procedure and DRX related issues	13.2.0	13.3.0
	RP-73	RP-161758	0917	2	Clarification of the Random Access procedure for NB-IoT	13.2.0	13.3.0
	RP-73	RP-161758	0918	2	onDurationTimer start for NB-IoT	13.2.0	13.3.0
	RP-73	RP-161755	0921	-	Repetition transmissions within a bundle in DL for MTC	13.2.0	13.3.0
2016-09	RP-73	RP-161747	0920	-	Introduction of L2 Latency reduction techniques	13.3.0	14.0.0
	RP-73	RP-161745	0922	-	Introducing eLAA in MAC	13.3.0	14.0.0
	RP-73	RP-161746	0923	1	Support for V2V services based on LTE sidelink	13.3.0	14.0.0

Note: WORD version for TS 36.321 v12.4.0 was changed over from WORD 2003 to WORD 2007. Accordingly, some table formats may be converted due to the impact of comparability mode but contents in the tables were confirmed to be consistent.

ASUS EX2033
Samsung v. ASUS
IPR2024-00614