UNITED STATES INTERNATIONAL TRADE COMMISSION
WASHINGTON, D.C.

Before the Honorable Bryan F. Moore
Administrative Law Judge

In The Matter Of **CERTAIN ACTIVE MATRIX ORGANIC LIGHT-EMITTING DIODE DISPLAY PANELS AND MODULES FOR MOBILE DEVICES, AND COMPONENTS THEREOF**	**Investigation No. 337-TA-1351**

COMPLAINANT'S OPENING CLAIM CONSTRUCTION BRIEF

TABLE OF CONTENTS

Table of Authorities iii

Table of Exhibits vi

I. Introduction 1

II. Legal Standard 4

A. Claim Construction 4

B. Indefiniteness 5

C. 35 U.S.C. § 112, ¶ 6 6

III. U.S. Patent No. 9,330,593 7

A. "an outputting unit having a first node and a second node, the outputting unit to supply a voltage of a first power supply to the output terminal according to a voltage applied to the first node and a signal of the third input terminal to the output terminal according to a voltage applied to the second node" (claims 1, 15) 8

B. "a first driver to control the voltage of the second node in accordance with signals of the first input terminal, the second input terminal, and the third input terminal" (claims 1, 15) 16

C. "a second driver to control the voltage of the first node in accordance with the signal of the second input terminal and the voltage of the second node" (claims 1, 15) 24

D. "node" (claims 1, 15) 29

IV. U.S. Patent No. 7,414,599 30

A. "fifth transistor" and "sixth transistor" (claim 1) 32

B. "grounded" (claims 15, 17) 35

V. U.S. Patent No. 11,594,578 39

A. "virtual quadrangle" (claims 23, 45, 47, 52) 40

B. "wherein a shortest distance between any two of the group of four neighboring ones of the plurality of first pixels is greater than a shortest distance between the only one of the second pixels and the third pixels included in the virtual quadrangle and a nearest one of the second pixels or

Petitioner Ex 1009, p. 2
BOE v. Samsung, IPR2024-00620

the third pixels in a direction perpendicular to any side of the virtual quadrangle" (claim 45) 46

Petitioner Ex 1009, p. 3
BOE v. Samsung, IPR2024-00620

TABLE OF AUTHORITIES

Page(s)

Cases

3M Innovative Properties Co. v. Avery Dennison Corp.,
350 F.3d 1365 (Fed. Cir. 2003).....32, 33

Advanced Ground Info Sys. v. Life 360, Inc.,
830 F.3d 1341 (Fed. Cir. 2016).....6

Align Tech., Inc. v. 3Shape,
No. 17-cv-1648-LPS, 2021 WL 2320139 (D. Del. June 7, 2021).....12, 19, 26

Apex Inc. v. Raritan Comput., Inc.,
325 F.3d 1364 (Fed. Cir. 2003).....11, 18

Augme Techs., Inc. v. Yahoo! Inc.,
755 F.3d 1326 (Fed. Cir. 2014).....5

BASF Corp. v. Johnson Matthey Inc.,
875 F.3d 1360 (Fed. Cir. 2017).....5

Boston Sci. Scimed, Inc. v. Cordis Corp.,
554 F.3d 982 (Fed. Cir. 2009).....5

Comcast Cable Communications, LLC v. Sprint Communications Co.,
38 F. Supp. 3d 589 (E.D. Pa. 2014).....33

Dyfan, LLC v. Target Corp.,
28 F.4th 1360 (Fed. Cir. 2022).....6, 7

Finjan, Inc. v. Proofpoint, Inc.,
No. 13-cv-05808-HSG, 2015 WL 7770208 (N.D. Cal. Dec. 3, 2015).....11, 19, 25

Gillette Co. v. Energizer Holdings, Inc.,
405 F.3d 1367 (Fed. Cir. 2005).....33

Halliburton Energy Servs., Inc. v. M-I LLC,
514 F.3d 1244 (Fed. Cir. 2008).....5

Halverson Wood Prods., Inc. v. Classified Sys. LLS,
No. 20-cv-801-JRT, 2022 WL 4464165 (D. Minn. Sept. 26, 2022).....12, 19, 26

Linear Tech. Corp. v. Impala Linear Corp.,
379 F.3d 1311 (Fed. Cir. 2004).....11, 18

Petitioner Ex 1009, p. 4
BOE v. Samsung, IPR2024-00620

Microsoft Corp. v. i4i Ltd., P'ship,
564 U.S. 91 (2011).....5

Midwest Athletics and Sports Alliance LCC v. Xerox Corp.,
6:19-CV-06036 EAW, 2020 WL 7692767 (W.D.N.Y. Dec. 28, 2020) 14

MIT v. Abacus Software,
462 F.3d 1344 (Fed. Cir. 2006).....11, 18, 25

N. Telecom Ltd. v. Samsung Elecs. Co. Ltd.,
215 F.3d 1281 (Fed. Cir. 2000).....4

Nature Simulation Sys. Inc. v. Autodesk, Inc.,
50 F.4th 1358 (Fed. Cir. 2022) 43

Nautilus, Inc. v. Biosig Instruments, Inc.,
572 U.S. 898 (2014).....5

Phillips v. AWH Corp.,
415 F.3d 1303 (Fed. Cir. 2005) (en banc).....4, 5

Seiko Epson Corp. v. Coretronic Corp.,
No. 06-06946, 2008 WL 2095505 (N.D. Cal. May 16, 2008).....34, 35

Sonix Tech. Co., Ltd. v. Publ'ns Int'l Ltd.,
844 F.3d 1370 (Fed. Cir. 2017).....5, 44

Tek Global, S.R.L. v. Sealant Sys. Int'l, Inc.,
920 F.3d 777 (Fed. Cir. 2019).....6, 12

Thorner v. Sony Comput. Entm't Am. LLC,
669 F.3d 1362 (Fed. Cir. 2012).....4

Toshiba Corp. v. Imation Corp.,
681 F.3d 1358 (Fed. Cir. 2012).....4

Vitronics Corp. v. Conceptronic, Inc.,
90 F.3d 1576 (Fed. Cir. 1996).....4, 15, 23, 28

Williamson v. Citrix Online, LLC,
792 F.3d 1339 (Fed. Cir. 2015) (en banc)..... *passim*

Zeroclick, LLC v. Apple Inc.,
891 F.3d 1003 (Fed. Cir. 2018).....6

Petitioner Ex 1009, p. 5
BOE v. Samsung, IPR2024-00620

Statutes

35 U.S.C. § 112 ..... *passim*

35 U.S.C. § 282 5

Petitioner Ex 1009, p. 6
BOE v. Samsung, IPR2024-00620

TABLE OF EXHIBITS

Ex. A Responsive Declaration of Dr. Miltiadis Hatalis (May 25, 2023)

Ex. B Declaration of Dr. Daniel Foty Concerning Claim Construction For Certain Terms In U.S. Patent Nos. 7,414,599 And 9,330,593 (May 17, 2023)

Ex. C Excerpts from the File History for U.S. Patent No. 7,414,599 (highlights added)

Ex. D Excerpts from the Illustrated Dictionary of Electronics (5th ed. 1991) (highlights added)

Ex. E Excerpts from Merriam-Webster's Collegiate Dictionary (11th ed. 2003)

Ex. F Excerpts from the File History for U.S. Patent No. 11,594,578 (highlights added)

Ex. G U.S. Patent No. 9,887,247 (highlights added)

Ex. H U.S. Patent No. 11,114,016 (highlights added)

Ex. I U.S. Patent Application Publication 2022/0310711 (highlights added)

I. Introduction

Complainant Samsung Display Company, Ltd. is a world leader in active matrix organic light-emitting diode ("AMOLED") displays. Over the course of more than twenty years of research and development, Samsung Display developed the foundational technologies that have allowed AMOLED displays to achieve widespread commercial adoption in mobile devices. Patents arising from three areas of these technologies are at issue in this Investigation. First, U.S. Patent No. 7,414,599 ("the '599 Patent") is directed to novel pixel circuits for AMOLED devices that provide high image quality, succeeding where others had failed in the pursuit of suitable pixel circuits for mobile devices. The '599 Patent issued from an application filed in 2004. Second, U.S. Patent No. 9,330,593 ("the '593 Patent") is directed to novel scan driver circuits for AMOLED displays in mobile devices that allow for fast addressing of pixels in ultra-high-resolution displays while also reducing the footprint of the scan driver circuits to allow for larger active viewing areas. The '593 Patent issued from an application filed in 2013. Third, U.S. Patent No. 9,818,803 ("the '803 Patent"), U.S. Patent No. 10,854,683 ("the '683 Patent"), and U.S. Patent No. 11,594,578 ("the '578 Patent") (together, the "Diamond Pixel Patents") concern novel arrangements of pixels for an AMOLED display that, among other things, substantially increase the pixel density, allowing for high-resolution displays and superior image quality in mobile devices. The Diamond Pixel Patents are related patents that share the same written description and stem from an application filed in 2012.

The parties have identified for briefing terms from three of the asserted patents: the '599 Patent, the '593 Patent, and the '578 Patent. The constructions proposed by Complainant reflect the meaning of the technical terms at issue to a person of ordinary skill in the art ("POSITA") at the time of the inventions based on the intrinsic evidence and, where applicable, extrinsic evidence

Petitioner Ex 1009, p. 8
BOE v. Samsung, IPR2024-00620

showing a customary meaning. With just one exception, discussed below, Staff's constructions accord with Complainant's.

Most Respondents have not sought construction of any terms. Mianyang BOE was the only Respondent to identify any terms for construction or to propose any constructions other than plain and ordinary meaning. Respondents DFW Imports LLC d/b/a DFW Cellphone and Parts; Electronics Universe, Inc. d/b/a Fixez.com and Repairs Universe, LLC; eTech Parts Plus, LLC; Gadgetfix Corp.; Injured Gadgets, LLC; LCTech International Inc. d/b/a SEGMobile.com; Parts4Cells, Inc.; Phone LCD Parts LLC d/b/a Parts4LCD; and Wholesale Gadget Parts, Inc., did not seek construction of any term and have taken no position as to the construction of any term identified by Mianyang BOE. Respondents Apt-Ability, LLC d/b/a MobileSentrix and Mobile Defenders, LLC (collectively, "MobileSentrix") had also agreed, until just two business days ago, that each of the terms discussed herein carries its plain and ordinary meaning. However, on the evening of Friday, June 9, MobileSentrix advised that it will now join Mianyang BOE's positions.

Consistent with its prior position, i.e., that each of the terms discussed herein carries its plain and ordinary meaning, MobileSentrix did not serve an expert report on claim construction. Respondent Mianyang BOE served an initial expert declaration of Dr. Daniel Foty. Dr. Foty offers opinions on certain terms in the '599 and '593 Patents. Ex. B. Significantly, Dr. Foty did *not* offer an opinion as to any term that Mianyang BOE asserts are indefinite, and Dr. Foty offered opinions on only some, but not all, of the terms Mianyang BOE asserts are subject to 35 U.S.C. § 112, ¶ 6. Complainant served a rebuttal expert declaration of Dr. Miltiadis Hatalis, which addresses each of the terms discussed by Dr. Foty. Ex. A.

Having widely copied Samsung Display's patented technologies, Respondent Mianyang BOE proposes constructions that are consistently aimed at narrowing the claims or asserting they

are indefinite. Where Mianyang BOE proposes constructions, it consistently reads in limitations that are found nowhere in the intrinsic evidence and that are unsupported by relevant dictionaries and technical documents contemporaneous with the inventions of the Asserted Patents. Mianyang BOE's constructions are inconsistent with the intrinsic record, and often contradicted by Mianyang BOE's own expert's declaration, as well as extrinsic evidence on which he relies. Mianyang BOE further asserts that various terms of the '578 Patent are indefinite. Yet despite having served an expert declaration, Mianyang BOE provides no expert testimony supporting its allegation that the claims, when viewed in light of the specification and prosecution history, fail to inform a POSITA about the scope of the invention with reasonable certainty. To the contrary, as explained below, the claim language itself, particularly when read in the context of the specification and prosecution history, makes clear the scope of each of the disputed terms.

Finally, while no private party has identified any issue of definiteness with the claims of the '599 Patent, Staff has raised a question as to whether claim 1 of the '599 Patent is indefinite based on the claim's recitation of "a first transistor," "a second transistor," "a third transistor," "a fifth transistor," and "a sixth transistor," without discussing a "fourth" transistor. Respectfully, Complainant disagrees that the absence of reference to a "fourth" transistor in claim 1 presents an issue of indefiniteness, and is unaware of any case that supports such a proposition. A skilled artisan would fully understand the claim, and even Respondents have not contended otherwise. If anything, the issue raised by Staff is properly analyzed as whether a "fourth" transistor is implicitly required by the claim, but that is an issue of claim interpretation and not one of definiteness. Since all of the products at issue contain at least six different transistors per pixel circuit, this interpretative question is also unlikely to be of significance.

II. Legal Standard

A. Claim Construction

A court "look[s] to the words of the claims themselves . . . to define the scope of the patented invention." *Phillips v. AWH Corp.*, 415 F.3d 1303, 1312 (Fed. Cir. 2005) (en banc) (internal quotation marks omitted). "[T]he claims themselves provide substantial guidance as to the meaning of particular claim terms." *Id.* at 1314.

A claim term is generally given its "ordinary and customary meaning," which is "the meaning that the term would have to a person of ordinary skill in the art in question at the time of the invention." *Id.* at 1313. "Absent disclaimer or lexicography, the plain meaning of the claim controls." *Toshiba Corp. v. Imation Corp.*, 681 F.3d 1358, 1369 (Fed. Cir. 2012).

A person of ordinary skill "is deemed to read the claim term not only in the context of the particular claim . . . , but in the context of the entire patent, including the specification." *Phillips*, 415 F.3d at 1313. The specification "is always highly relevant to the claim construction analysis" and serves as "the single best guide to the meaning of a disputed term." *Vitronics Corp. v. Conceptronic, Inc.*, 90 F.3d 1576, 1582 (Fed. Cir. 1996); *see Phillips*, 415 F.3d at 1315. The Federal Circuit has cautioned, however, that care must be taken not to import limitations into the claims. *See, e.g.*, *N. Telecom Ltd. v. Samsung Elecs. Co. Ltd.*, 215 F.3d 1281, 1290 (Fed. Cir. 2000) ("This court has repeatedly and clearly held that it will not read unstated limitations into claim language."); *Thorner v. Sony Comput. Entm't Am. LLC*, 669 F.3d 1362, 1366 (Fed. Cir. 2012) ("We do not read limitations from the specification into claims; we do not redefine words.").

A patent's prosecution history may be considered in construing claims. *See, e.g.*, *Phillips*, 415 F.3d at 1317. However, "because the prosecution history represents an ongoing negotiation between the PTO and the applicant, rather than the final product of that negotiation, it often lacks the clarity of the specification and thus is less useful for claim construction purposes." *Id.*

Extrinsic evidence such as expert testimony, treatises, and dictionaries may also be considered. *See, e.g.*, *Boston Sci. Scimed, Inc. v. Cordis Corp.*, 554 F.3d 982, 985–87 (Fed. Cir. 2009). "Dictionaries or comparable sources are often useful to assist in understanding the commonly understood meaning of words[.]" *Phillips*, 415 F.3d at 1322.

B. Indefiniteness

A patent must conclude with one or more claims "particularly pointing out and distinctly claiming subject matter which the applicant regards as his invention." 35 U.S.C. § 112, ¶ 2. Claims of issued patents are presumed valid. 35 U.S.C. § 282. A party challenging the validity of a claim on the ground of indefiniteness must prove by clear and convincing evidence that the claim is indefinite. *See BASF Corp. v. Johnson Matthey Inc.*, 875 F.3d 1360, 1365 (Fed. Cir. 2017); *Microsoft Corp. v. i4i Ltd., P'ship*, 564 U.S. 91, 95 (2011).

A patent claim is definite as long as the "claim[], viewed in light of the specification and prosecution history, inform[s] those skilled in the art about the scope of the invention with reasonable certainty." *Nautilus, Inc. v. Biosig Instruments, Inc.*, 572 U.S. 898, 910 (2014). Under this standard, a claim is definite if a POSITA would have understood what is claimed when reading the claim in light of the specification and file history. *See Augme Techs., Inc. v. Yahoo! Inc.*, 755 F.3d 1326, 1340 (Fed. Cir. 2014). In other words, a person skilled in the art looks beyond the face of the claims to ascertain the claim scope. *See Halliburton Energy Servs., Inc. v. M-I LLC*, 514 F.3d 1244, 1249 (Fed. Cir. 2008). "The § 112 ¶ 2 requirement strikes a 'delicate balance' between 'the inherent limitations of language' and providing 'clear notice of what is claimed,'" *Sonix Tech. Co., Ltd. v. Publ'ns Int'l Ltd.*, 844 F.3d 1370, 1377 (Fed. Cir. 2017), "mandat[ing] clarity, while recognizing that absolute precision is unattainable," *Nautilus*, 572 U.S. at 910. Thus, "the certainty which the law requires in patents is not greater than is reasonable, having regard to their subject-matter." *Id.* (internal quotation marks omitted).

C. 35 U.S.C. § 112, ¶ 6

The Federal Circuit has explained that Section 112, ¶ 6 "does not apply when the words of the claim are understood by persons of ordinary skill in the art to have a sufficiently definite meaning as the name for structure." *Tek Global, S.R.L. v. Sealant Sys. Int'l, Inc.*, 920 F.3d 777, 785 (Fed. Cir. 2019) (internal quotation marks omitted).

To determine whether 35 U.S.C. § 112, ¶ 6 applies to a claim element, one "first look[s] to whether the limitation uses the word 'means.'" *Tek Global*, 920 F.3d at 785; *see Williamson v. Citrix Online, LLC*, 792 F.3d 1339, 1348 (Fed. Cir. 2015) (en banc)) ("[O]ur precedent has long recognized the importance of the presence or absence of the word 'means.'"). "If a claim element contains the word 'means' and recites a function, this creates a presumption that the claim is in means-plus-function form under 35 U.S.C. § 112, ¶ 6." *Advanced Ground Info Sys. v. Life 360, Inc.*, 830 F.3d 1341, 1347 (Fed. Cir. 2016) (internal quotation marks omitted). In contrast, if a claim element does not use the word "means," then there is a presumption "that § 112, para. 6 does *not* apply." *Id.* (quoting *Williamson*, 792 F.3d at 1348) (emphasis added).

The presumption that a claim element is not in means-plus-function form can only be overcome "if the challenger demonstrates that the claim term fails to recite sufficiently definite structure or else recites function without reciting sufficient structure for performing that function." *Id.* (quoting *Williamson*, 792 F.3d at 1348). "To overcome this presumption," the party claiming that a term is in means-plus-function form "ha[s] to show, by a preponderance of the evidence, that persons of ordinary skill in the art would not have understood the [] limitations to connote structure in light of the claim as a whole." *Dyfan, LLC v. Target Corp.*, 28 F.4th 1360, 1367 (Fed. Cir. 2022). "When evaluating whether a claim limitation invokes § 112, ¶ 6, the essential inquiry remains 'whether the words of the claim are understood by persons of ordinary skill in the art to have a sufficiently definite meaning as the name for structure.'" *Zeroclick, LLC v. Apple Inc.*, 891

F.3d 1003, 1007 (Fed. Cir. 2018) (quoting *Williamson*, 792 F.3d at 1348). "Claim terms need not connote a single, specific structure, and may instead describe a class of structures and still recite sufficiently definite structure to not invoke § 112 ¶ 6." *Dyfan*, 28 F.4th at 1366 (internal quotation marks omitted).

If a claim includes a "means-plus-function" limitation, the "claim shall be construed to cover the corresponding structure, material, or acts described in the specification and equivalents thereof." 35 U.S.C. § 112, ¶ 6.

III. U.S. Patent No. 9,330,593

The '593 Patent relates to AMOLED displays such as those used in mobile devices, and more particularly, to a novel stage circuit used in an AMOLED display. '593 Patent, abstract. In AMOLED displays, sets of pixels are sequentially selected to receive image data based on signals supplied to scan lines formed across the display (i.e., scan signals). *Id.*, 1:34–38. Scan signals are supplied to scan lines via a circuit known in the art as a scan driver. *Id.* The scan driver may include stage circuits that are coupled to, and supply scan signals to, the scan lines. *Id.*, 1:45–47. Stage circuits may be comprised of a number of transistors, and may receive a number of inputs that can include, for example, one or more initialization signals and clock signals. *Id.*, 1:51–2:5.

Prior to the '593 Patent, stage circuits included a large number of transistors and/or required that each stage circuit receive at least one initializing signal in addition to multiple clock signals, which led to reduced process yield and stability. The need for more than two clock signals and related circuitry also took up more space, which could otherwise be used for the pixels. '593 Patent, 9:12–26. The '593 Patent teaches novel stage circuit structures that can output scan signals based on first and second clock signals and the output signal of a previous stage circuit. *Id.* In addition to having reduced footprints, the novel stage circuits of the '593 Patent confer a number of advantages, including improved timing, reduced complexity, and improved stability. *Id.*

The ’593 Patent issued from an application filed on February 20, 2013, which claims priority to a Korean application filed on September 20, 2012. As Dr. Hatalis explains, a person of skill in the art of the ’593 Patent “would have had a relevant technical degree in Electrical Engineering, Computer Engineering, Materials Science, Physics, or the like, and experience in active matrix display design and electroluminescence.” Ex. A, Hatalis Decl., ¶ 19. Mianyang BOE’s expert proffers a different definition—“a Bachelor’s degree in electrical engineering or similar discipline, along with 2–3 years of circuit design experience,” Ex. B, Foty Decl., ¶ 11—that entails only “circuit design experience” and no experience with active matrix display design or electroluminescence. Mianyang BOE’s definition does not accurately reflect the experience of those working in the field or the technology of the ’593 Patent. *See, e.g.*, Ex. A, Hatalis Decl., ¶ 20.

A. “an outputting unit having a first node and a second node, the outputting unit to supply a voltage of a first power supply to the output terminal according to a voltage applied to the first node and a signal of the third input terminal to the output terminal according to a voltage applied to the second node” (claims 1, 15)

Complainant and Staff’s Construction	Mianyang BOE and MobileSentrix’s Construction
Plain and ordinary meaning; not a means-plus-function limitation.	This is a § 112(6) limitation Function: supplying a voltage of a first power supply to the output terminal according to a voltage applied to the first node and a signal of the third input terminal to the output terminal according to a voltage applied to the second node. Structure 1: ’593 patent at Figs. 3, 6 and 7 (Outputting Unit 230, including its input and output connections); 5:37–62, 8:28–31, and 8:43–46. Regardless of whether this limitation is determined to be a § 112(6) limitation or not, the claimed function must:

	supply a voltage of a first power supply to the output terminal solely based on a voltage applied to the first node; and supply a signal of the third input terminal to the output terminal solely based on a voltage applied to the second node.

Claims 1 and 15 of the ’593 Patent recite a type of circuit, stage circuits, and particular structures that are included in the stage circuits, including, “an outputting unit having a first node and a second node, the outputting unit to supply a voltage of a first power supply to the output terminal according to a voltage applied to the first node and a signal of the third input terminal to the output terminal according to a voltage applied to the second node.” ’593 Patent, claim 1. The claims make clear that the “outputting unit” is part of the stage circuit. *Id*., claim 15 (“wherein each of the stage circuits includes: an outputting unit having a first node and a second node . . . .”). Claim 15 further explains that the stage circuit is itself part of a scan driver. *Id.*, claim 15. And the parties agree that “scan driver[s]” are a known class of circuits, as Dr. Hatalis explains in his declaration. Ex. A, Hatalis Decl., ¶ 70.

An “outputting unit” is a known type of structure, and is defined in the claims not only as being part of the stage circuit but also as containing particular structural elements, “a first node and a second node.” The claims describe how the “outputting unit” interacts with other recited structures of the stage circuit, including specifying terminals to which the “outputting unit” is connected. Dependent claims further specify particular transistors and capacitors in the outputting unit, further informing tis structure. The specification also describes the “outputting unit” at length, including transistors and capacitors included within it. As Complainant and Staff propose, this claim term has a plain and ordinary meaning to a POSITA and requires no further construction.

Despite the fact that the claim language provides a structural description, Mianyang BOE argues that this claim element is means-plus-function. Mianyang BOE is incorrect. As an initial

matter, because the term does not use the word "means," there is a presumption that § 112, ¶ 6 does not apply. *Williamson*, 792 F.3d at 1349. Notably, although Mianyang BOE served an expert declaration to contend that certain other terms lack sufficient structure, its expert did *not* offer any opinion that the "outputting unit an outputting unit having a first node and a second node" lacks sufficient structure. For this reason and others discussed below, Mianyang BOE cannot rebut the presumption that § 112, ¶ 6 does not apply.

First, the claims themselves contain explicit language that informs a POSITA of the structure of the outputting unit. Claims 1 and 15 both recite that the outputting unit is part of a particular type of circuit, namely a "stage circuit." For example, claim 15 recites "[a]n organic light emitting display, comprising . . . [a] scan driver including stage circuits coupled to the scan lines, each of the stage circuits generating a corresponding scan signal of the scan signals and having a first input terminal, a second input terminal, a third input terminal, and an output terminal" and "wherein each of the stage circuits includes: an outputting unit having a first node and a second node, the outputting unit to supply a voltage of a first power supply to the output terminal according to a voltage applied to the first node and a signal of the third input terminal to the output terminal according to a voltage applied to the second node." '593 Patent, claim 15. A POSITA would recognize that the outputting unit is therefore a circuit, and specifically part of a stage circuit of a scan driver. As Dr. Hatalis explains, scan drivers were a known type of circuit structure, and indeed could be purchased commercially at the time of the '593 Patent. Ex. A, Hatalis Decl., ¶ 70. The parties agree, in fact, that a "scan driver" is a well-defined class of circuits that connotes sufficient structure to a POSITA, such that the "scan driver" is not a means-plus-function limitation. A POSITA would understand that the "outputting unit" connotes structure as part of the well-defined class of stage circuits in scan drivers.

The Federal Circuit has repeatedly held that "the term 'circuit,' combined with a description of the function of the circuit, connoted sufficient structure to one of ordinary skill in the art to avoid 112 ¶ 6 treatment." *MIT v. Abacus Software*, 462 F.3d 1344, 1355 (Fed. Cir. 2006); *see also Linear Tech. Corp. v. Impala Linear Corp.*, 379 F.3d 1311, 1320 (Fed. Cir. 2004); *Apex Inc. v. Raritan Comput., Inc.*, 325 F.3d 1364, 1373 (Fed. Cir. 2003). Here, the claim identifies the outputting unit as a specific type of circuit and describes the function of the circuit, and even goes beyond that to describe further structure of the outputting unit circuitry.

Second, the claims recite specific structure *within* the outputting unit. In particular, the outputting unit contains "a first node and a second node." As discussed in Section III.D below, a POSITA would understand that the plain and ordinary meaning of "node" is "a point or area of interconnection between two or more components." While there is some dispute over the construction of "node," there is no dispute that it refers to a structure in a circuit. The recitation that the outputting unit contains the two nodes thus discloses additional structure required of the circuit.

Third, the claims describe how the outputting unit interacts with the other components of the invention, thereby further informing a POSITA of the outputting unit's structure. *See Finjan, Inc. v. Proofpoint, Inc.*, No. 13-cv-05808-HSG, 2015 WL 7770208, at *9–11 (N.D. Cal. Dec. 3, 2015). For example, the claims recite that the outputting unit "suppl[ies] a voltage of a first power supply to the output terminal according to a voltage applied to the first node and a signal of the third input terminal according to a voltage applied to the second node." The claims explicitly describe how the outputting unit interacts with the "first power supply," the "third input terminal," and the "output terminal." A POSITA would understand that in order to supply different voltages to the output terminal, the outputting unit includes circuit elements capable of switching between

the voltage of a first power supply and the signal of the third input terminal. A POSITA would recognize that switching elements such as transistors perform this switching between signals.

Fourth, "the Court may consider relevant dependent claims to determine if they add limitations that either describe particular features or flesh out whether the term has a particular structural meaning." *Halverson Wood Prods., Inc. v. Classified Sys. LLS*, No. 20-cv-801-JRT, 2022 WL 4464165, at *6 (D. Minn. Sept. 26, 2022) (quoting *Tek Global*,, 920 F.3d at 786) (internal quotation marks omitted)); *see also Align Tech., Inc. v. 3Shape*, No. 17-cv-1648-LPS, 2021 WL 2320139, at *16 (D. Del. June 7, 2021) ("[T]he fact that a dependent claim recites that 'the optics expander unit comprises a grating or a microlens array' . . . further suggests that § 112 ¶ 6 does not govern here[.]"). Here, dependent claims specify particular structures for the output unit, including transistors and capacitors, further informing a POSITA of the outputting unit's structure. *See* '593 Patent, claims. 7, 21. For example, claim 21 recites that that outputting unit includes:

> a fourth transistor between the first power supply and the output terminal, the fourth transistor having a gate electrode coupled to the first node;
> a fifth transistor between the output terminal and the third input terminal, the fifth transistor having a gate electrode coupled to the second node;
> a first capacitor between the second node and the output terminal; and
> a second capacitor between the first node and the first power supply.

'593 Patent, claim 21. The dependent claims unquestionably inform a POSITA as to the structure of the "outputting unit," consistent with the language of the independent claims.

Moreover, the remainder of the specification of the '593 Patent further confirms that the outputting unit having a first node and a second node is describing structure. For example, the figures of the '593 Patent depict exemplary structures of the "outputting unit," including in the expanded portion of annotated Figure 3 below of an exemplary stage circuit of a first embodiment:

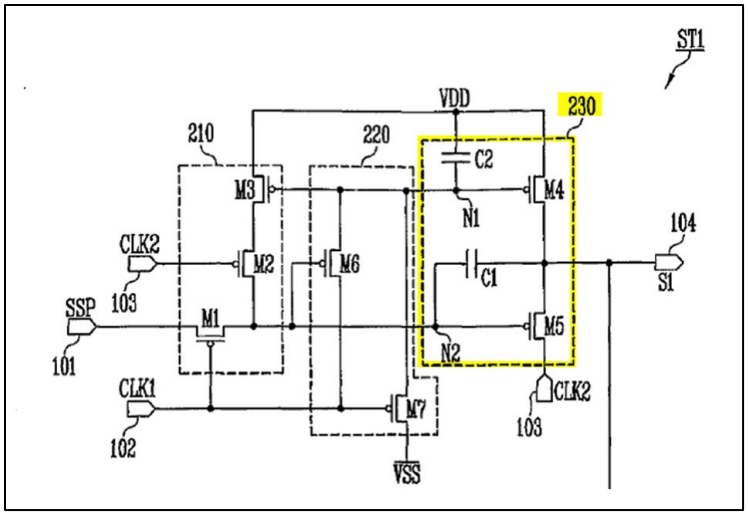

’593 Patent, Fig. 3 (highlighting added). Highlighted element 230 is the outputting unit. *See, e.g.*, *id*., 5:37–41. As shown in Figure 3, and described in Column 5 of the specification, the outputting unit of the stage circuit includes each of the elements described above, including nodes N1 and N2, transistors M4 and M5, and capacitors C1 and C2. Further, these elements are configured consistent with the elements of dependent claim 21 described above. The structure depicted in Figure 3 and described in Column 5 further confirms that the claimed “outputting unit” conveys sufficient structure to a POSITA. *See, e.g.*, *id.*, 5:37–62 (describing configuration of the outputting unit according to the exemplary embodiment of Figure 3).

Finally, extrinsic evidence further demonstrates that “outputting unit” has a commonly understood meaning to a POSITA and that the ’593 Patent uses the term consistent with that common understanding. The Illustrated Dictionary of Electronics, for example, defines “output unit” to be synonymous with “output device” which is “[a] device, such as an output transformer, that serves to transfer energy or information from a circuit or a device.” Ex. D at 436. This is precisely the sense in which the term is used in the ’593 Patent. The outputting unit is a circuit structure that supplies either “a voltage of a first power supply” or “a signal of the third input

terminal" to the output terminal, which is then passed along to the pixel circuits of the display. *See, e.g.*, '593 Patent, 1:51–56, 2:54–59.

Mianyang BOE has not presented any evidence that the claims lack structure, and cannot overcome the presumption that the claimed "outputting unit having a first node and a second node" is not a means-plus-function term. Tellingly, although Mianyang BOE served an expert declaration of Dr. Foty, he does *not* offer any opinion that to a POSITA the element of "an outputting unit having a first node and a second node" lacks sufficient structure. Mianyang BOE's construction should thus be rejected. *See, e.g.*, *Midwest Athletics and Sports Alliance LCC v. Xerox Corp.*, 6:19-CV-06036 EAW, 2020 WL 7692767, at *24 (W.D.N.Y. Dec. 28, 2020) ("Here, Defendant has not rebutted the presumption that 'biasing unit' is not a means-plus-function limitation, because it has pointed to no evidence regarding whether a person of ordinary skill in the art would understand 'biasing' to impart structural significance in this context.").

Mianyang BOE's proposal should also be rejected for the further reason that it improperly attempts to read additional limitations into the claim that are not called for by the claim language. In an addendum to its proposal, Mianyang BOE asserts that "[r]egardless of whether this limitation is determined to be a § 112(6) limitation or not, the claimed function must supply a voltage of a first power supply to the output terminal *solely* based on a voltage applied to the first node; and supply a signal of the third input terminal to the output terminal *solely* based on a voltage applied to the second node" (emphases added). But the claim language requires only that the outputting unit supply a voltage to the output terminal "according to" the voltage applied to the first and second nodes. Nothing in the claims or the specification requires that the voltage be supplied "solely" based on the voltage applied to the first node or "solely" based on the voltage applied to

the second node. Mianyang BOE is plainly attempting to add a limitation not found in the claim language.

In fact, Mianyang BOE's proposal contradicts the teachings of the specification and would read out the preferred embodiment. It is well established that a claim construction that excludes a preferred embodiment is "rarely, if ever, correct." *Vitronics*, 90 F.3d at 1583. As both the claim language and the specification make clear, the voltage applied to the first node and the voltage applied to the second node work in concert to determine the signal at the output terminal. For example, as described in the specification, and as shown in Figure 3, the voltage applied to the first node N1 helps to determine whether transistor M4 is turned on, so as to couple the power supply VDD to the output terminal. *See* '593 Patent, 5:37–55. Similarly, the voltage applied to the second node N2 helps determine whether transistors M5 is turned on, in which case the third input terminal is coupled to the output terminal. *Id*. Thus, as the specification explains, the voltage supplied to the output terminal (whether the first power supply or the signal of the third input terminal) is not based *solely* on the voltage on either node independent of the other. Mianyang BOE's proposal is flatly contrary to the teachings of the specification and should be rejected.

Further, as is well understood (and is exemplified, for example, in the '599 Patent), the extent to which a transistor is turned on or off is not based *solely* on its gate voltage, but rather on the difference in voltage between the gate and source of the transistor. *See, e.g.*, '599 Patent, 8:1–13. For this reason as well, whether transistors M4 and M5 are turned on or off is not based *solely* on the voltages applied to their gates, i.e., the voltages on the first and second nodes. Again, Mianyang BOE's proposal is inconsistent with the disclosures of the '593 Patent and the patent's preferred embodiments.

Thus, a POSITA would understand that the term "an outputting unit having a first node and a second node, the outputting unit to supply a voltage of a first power supply to the output terminal according to a voltage applied to the first node and a signal of the third input terminal to the output terminal according to a voltage applied to the second node" carries its plain and ordinary meaning in the '593 Patent, as Complainant and Staff propose, and is not subject to § 112, ¶ 6.

B. "a first driver to control the voltage of the second node in accordance with signals of the first input terminal, the second input terminal, and the third input terminal" (claims 1, 15)

Complainant and Staff's Construction	Mianyang BOE and MobileSentrix's Construction
Plain and ordinary meaning, wherein a "driver" is "an electronic circuit used to power or control something"	This is a § 112(6) limitation Function: controlling the voltage of the second node in accordance with signals of the first input terminal, the second input terminal, and the third input terminal. Structure 1: '593 patent at Fig. 3 (First Driver 210, including its input and output connections); 5:63–6:21. Structure 2: '593 patent at Fig. 6 (First Driver 210, including its input and output connections); 5:63–6:21, 8:28–31. Structure 3: '593 patent at Fig. 7 (First Driver 210, including its input and output connections); 5:63–6:21; 8:43–46. Regardless of whether this limitation is determined to be a § 112(6) limitation or not, the claimed function requires that: the voltage of the second node is the voltage of the output of the first driver based on the signals of the first input terminal, the second input terminal, and the third input terminal, which are input to the first driver.

In the claims of the ’593 Patent, the stage circuit comprises, in addition to the outputting unit having a first and second node discussed above, “a first driver to control the voltage of the second node in accordance with signals of the first input terminal, the second input terminal, and the third input terminal.” ’593 Patent, claims 1, 15. The claims make clear that the “first driver” is part of the stage circuit. *See, e.g.*, *id.*, claim 15 (“wherein each of the stage circuits includes . . . a first driver to control the voltage of the second node in accordance with signals of the first input terminal, the second input terminal, and the third input terminal”). As discussed above, claim 15 explains that the stage circuit is itself part of a scan driver. *Id.*, claim 15. And the parties agree that “scan driver[s]” are a known class of circuits, as Dr. Hatalis explains in his declaration. Ex. A, Hatalis Decl., ¶ 70. The claims also describe how the “first driver” interacts with the other recited structures of the stage circuit, and dependent claims specify particular structural elements (e.g., transistors) included within the “first driver.” This claim element would be readily understood by a POSITA, as both Complainant and Staff propose, as carrying its plain and ordinary meaning, wherein “driver” is “an electronic circuit used to power or control something,” and the remainder of the term has a plain meaning that requires no elaboration.

Despite the fact that the claim language provides a structural description and does not use the term “means,” Mianyang BOE argues that the claim element is means-plus-function. Mianyang BOE is incorrect. Because the term does not use the word “means,” there is a presumption that § 112, ¶ 6 does not apply. *Williamson*, 792 F.3d at 1349. Mianyang BOE cannot rebut this presumption. The claims themselves contain explicit language that would inform a POSITA of the structure of the “first driver,” and the specification further describes the structure. *See, e.g.*, Ex. A, Hatalis Decl., ¶¶ 93–97.

First, the claims themselves contain explicit language that informs a POSITA of the structure of the "first driver." The claims explain that the first driver is part of a "stage circuit." For example, claim 15 is directed to "[a]n organic light emitting display, comprising . . . [a] scan driver including stage circuits coupled to the scan lines, each of the stage circuits generating a corresponding scan signal of the scan signals and having a first input terminal, a second input terminal, a third input terminal, and an output terminal" and "wherein each of the stage circuits includes . . . a first driver to control the voltage of the second node in accordance with signals of the first input terminal, the second input terminal, and the third input terminal." '593 Patent, claim 15. A POSITA would recognize that the first driver is therefore a circuit, and specifically part of a stage circuit of a scan driver. *See* Ex. A, Hatalis Decl., ¶ 93. As Dr. Hatalis explains, scan drivers were a known type of circuit structure, and indeed could be purchased commercially at the time of the '593 Patent. *Id.* ¶ 70. The parties agree, in fact, that a "scan driver" is a well-defined class of circuits that connotes sufficient structure to a POSITA, such that the "scan driver" is not a means-plus-function limitation. A POSITA would understand that the "first driver" connotes structure as part of the well-defined class of scan driver circuits.

The Federal Circuit has repeatedly held that "the term 'circuit,' combined with a description of the function of the circuit, connoted sufficient structure to one of ordinary skill in the art to avoid 112 ¶ 6 treatment." *MIT*, 462 F.3d at 1355; *see also Linear Tech.*, 379 F.3d at 1320 *Apex Inc.*, 325 F.3d at 1373. Here, the claim identifies the first driver as a specific type of circuit and describes the function of the circuit, and even goes beyond that to describe further structure of the first driver circuitry.

In addition, the claim language specifies that the first driver contains a specified transistor: "the signal of the third input terminal directly controls an on/off operation of a transistor, the

transistor included in the first driver." '593 Patent, claims 1, 15. The parties agree that "directly controls" means "controls with no intervening circuit elements." Thus, not only does the claim language explain to a POSITA that the first driver is a circuit within the stage circuit of the scan driver, it also specifies that the first driver includes a transistor whose on/off operation is controlled with no intervening circuit elements by the signal of the third input terminal.

Second, claims 1 and 15 also describe how the first driver interacts with the other components of the invention, further informing a POSITA of the first driver's structure. *See Finjan*, 2015 WL 7770208, at *9–11. For example, the claims recite that the first driver "control[s] the voltage of the second node in accordance with signals of the first input terminal, the second input terminal, and the third input terminal." '593 Patent, claim 15. The second node, first input terminal, second input terminal, and third input terminal are all structural elements, and the claims describe how the first driver interacts with these elements, which would further inform a POSITA as to the first driver's structure. *See* Ex. A, Hatalis Decl., ¶ 93.

Third, "the Court may consider relevant dependent claims to determine if they add limitations that either describe particular features or flesh out whether the term has a particular structural meaning." *Halverson*, 2022 WL 4464165, at *6 (internal quotation marks and citations omitted); *see also Align Tech.*, 2021 WL 2320139, at *16 ("Further, the fact that a dependent claim recites that 'the optics expander unit comprises a grating or a microlens array' . . . further suggests that § 112 ¶ 6 does not govern here[.]"). Here, dependent claims specify particular structures for the first driver that include three transistors, which further inform a POSITA of the first driver's structure. *See* '593 Patent, claims 6, 20. Claim 20, for example, recites that the first driver includes:

> a first transistor between the first input terminal and the second node, the first transistor having a gate electrode coupled to the second input terminal; and

a second transistor and a third transistor serially positioned between the second node and the first power supply,
wherein a gate electrode of the second transistor is coupled to the third input terminal, and
wherein a gate electrode of the third transistor is coupled to the first node.

’593 Patent, claim 20.

Fourth, the remainder of the specification of the ’593 Patent further confirms the structure of the first driver. For example, the Figures of the ’593 Patent depict an exemplary structure. Figure 3, a portion of which is reproduced and annotated below, shows an exemplary stage circuit of a first embodiment:

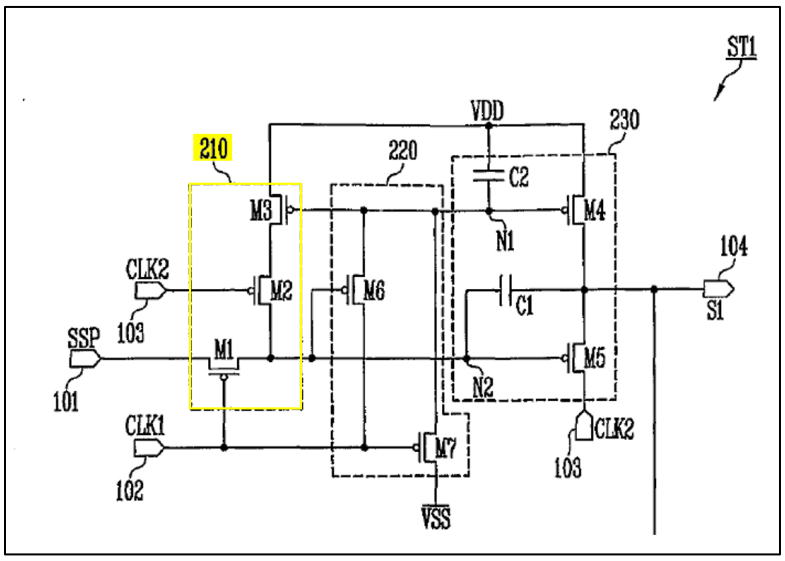

’593 Patent, Fig. 3 (highlighting added). In Figure 3, the “first driver” is element 210. *See, e.g.*, ’593 Patent, 5:63–67, 6:22–26. The Figure shows all the structural elements described above, including the second node N2, first input terminal SSP, second input terminal CLK1, and third input terminal CLK2. *See, e.g.*, Ex. A, Hatalis Decl., ¶¶ 95–96. The Figure further illustrates how the first driver interacts with these elements. *Id.* ¶ 97. The Figure therefore further confirms that the claimed “first driver” would convey sufficient structure to a skilled artisan. *See, e.g.*, ’593 Patent, 5:63–6:40 (describing the configuration of the first and second drivers in the embodiment of Figure 3).

Finally, the extrinsic evidence further demonstrates that a "driver" connotes a well-understood class of structures to a POSITA and that the '593 Patent uses the term "driver" consistently with that common understanding. As Dr. Hatalis explains, the plain and ordinary meaning of a "driver," as reflected by the IEEE Dictionary, is "a circuit or device used to power or control" something. Ex. A, Hatalis Decl., ¶ 71 (citing IEEE Dictionary). Numerous other dictionaries support this plain meaning. *See id.*, ¶ 90. Indeed, Mianyang BOE's expert cites multiple dictionaries in addition to the IEEE Dictionary, and each one of them is consistent with this understanding:

- Oxford Dictionary of Computing (2008): defining "driver" as "An electronic circuit, often available in the form of a logic gate, that is capable of providing large currents or voltages to other circuits connected to the driver's output,"
- Merriam-Webster's Collegiate Dictionary (2006): defining "driver" as "an electronic circuit that supplies input to another electronic circuit";
- American Heritage Dictionary (2009): defining "driver" as "A machine part that transmits motion or power to another part."

Ex. B, Foty Decl., ¶ 103. Thus, even the dictionary definitions cited by Mianyang BOE's expert reflect that the term "driver" is understood to refer to a class of structures.

For all of these reasons, Mianyang BOE cannot overcome the presumption that the claimed "first driver" is not a means-plus-function term. Not only has Mianyang BOE failed to produce evidence that the element lacks structure, but the extrinsic evidence cited by its own expert actually compels the opposite conclusion. The dictionaries cited by Mianyang BOE's expert confirm that a driver is a common term that would be readily understood by a POSITA, and they also explicitly define a driver in structural terms, such as "an electronic circuit" or "a logic gate."

Moreover, even setting aside that the dictionary definitions of "driver" cited by Mianyang BOE's expert affirmatively undercut Mianyang BOE's argument, his opinions could not help that argument because he failed to consider the full relevant language of the claims. He offers only an

opinion on the meaning of word "driver" in isolation, devoid of any context. *See* Ex. B, Foty Decl., ¶¶ 99–105. He failed to discuss or address the full claim term of "a first driver to control the voltage of the second node in accordance with signals of the first input terminal, the second input terminal, and the third input terminal." *Id*. He also failed to address the full context of the claim, including the language discussed above, such as "stage circuit" and the recitation of a specific transistor connected to a specified terminal that provides additional structure for the claim term, and the dependent claims. *Id*.

Mianyang BOE's proposal should also be rejected for the further reason that it improperly attempts to read additional limitations into the claim that are not called for by the claim language. In an addendum to its proposal, Mianyang BOE asserts that "[r]egardless of whether this limitation is determined to be a § 112(6) limitation or not, the claimed function requires that the voltage of the second node is the voltage of the output of the first driver." Mianyang BOE's assertion contradicts the plain language of the claim. The claim recites only that the first driver "controls" the voltage of the second node, not that the voltage of the first driver "is" the voltage of the second node. Controlling a voltage is conceptually different from *being* that voltage. Nothing in the claim or the specification requires that the voltage of the second node "is" the output of the first driver.

Mianyang BOE's expert suggests that a driver cannot "'control' the voltage of a node if something other than the driver's output is able to override that output." Ex. B, Foty Decl., ¶ 108. But he ignores the fact that the '593 Patent draws a clear distinction between "controlling" and "directly controlling." When the patentees intended to require "direct control," they said so explicitly. *See, e.g.*, '593 Patent, claim 1 ("the signal of the third input terminal directly controls"); *see also* Ex. A, Hatalis Decl., ¶ 99. But the "first driver" is recited to "control the voltage of the second node in accordance with" certain signals, without the modifier "directly." *Id*. The

specification confirms that absent the clear use of the modifier "directly" no such limitation should be imputed. *See, e.g.*, '593 Patent, 4:19–26 ("It will also be understood that when an element is referred to as being 'between', 'connected to', or 'coupled to' another element, it can be directly between, connected or coupled to the other element or intervening elements may be present. In contrast, when an element is referred to as being 'directly between,' 'directly connected to', or 'directly coupled to' another element, there are no intervening elements present."). Mianyang BOE's proposal, as discussed by its expert, thus appears to try to rewrite "controls" as "directly controls," which is contrary to the claim language. Ex. A, Hatalis Decl., ¶ 99.

Indeed, Mianyang BOE's construction would improperly read out a preferred embodiment. A claim construction that excludes the preferred embodiment is "rarely, if ever, correct and would require highly persuasive evidentiary support." *Vitronics*, 90 F.3d at 1583. In the exemplary embodiment of Figure 3, the first driver controls the voltage of the second node in conjunction with other circuit elements, including "first capacitor C1." The patent explains that "[t]he first capacitor C1"—which is part of the outputting unit, not the first driver—"is coupled between the second node N2 and the output terminal" and "charges the voltage corresponding to turn on and off of the fifth transistor." '593 Patent, 5:56–59. Thus, it is not the first driver alone that controls the voltage held on the second node, but the first driver in conjunction with other circuit elements.

Accordingly, the term "a first driver to control the voltage of the second node in accordance with signals of the first input terminal, the second input terminal, and the third input terminal" should be given its plain and ordinary meaning, as Complainant and Staff propose, wherein a "driver" is "an electronic circuit used to power or control something." The term is not subject to § 112, ¶ 6.

C. "a second driver to control the voltage of the first node in accordance with the signal of the second input terminal and the voltage of the second node" (claims 1, 15)

Complainant and Staff's Construction	Mianyang BOE and MobileSentrix's Construction
Plain and ordinary meaning, wherein a "driver" is "an electronic circuit used to power or control something"	This is a § 112(6) limitation Function: controlling the voltage of the first node in accordance with the signal of the second input terminal and the voltage of the second node. Structure 1: '593 patent at Fig. 3 (Second Driver 220, including its input and output connections); 6:22–40. Structure 2: '593 patent at Fig. 6 (Second Driver 220a, including its input and output connections); 8:32–42. Regardless of whether this limitation is determined to be a § 112(6) limitation or not, the claimed function requires that: the voltage of the first node is the voltage of the output of the second driver based on the signal of the second input terminal and the voltage of the second node, which are input to the second driver.

As described above, claims 1 and 15 of the '593 Patent relate to stage circuits, such as those included in scan driver circuitry. *See, e.g.*, '593 Patent, claim 15. The claims recite certain structures that are included in the stage circuits, including "a second driver to control the voltage of the first node in accordance with the signal of the second input terminal and the voltage of the second node." The claims make clear that the "second driver" is part of the stage circuit. *See, e.g.*, *id.* ("wherein each of the stage circuits includes. . . a second driver to control the voltage of the first node in accordance with the signal of the second input terminal and the voltage of the second node"). The claims also describe how the "second driver" interacts with the other structures of the

claimed stage circuit, and dependent claims further specify particular structural elements (e.g., transistors) included within the "second driver." The "second driver" term would be readily understood by a POSITA to carry its plain and ordinary meaning, wherein a "driver" is "an electronic circuit used to power or control something," as Complainant and Staff propose.

Even though the claim language provides a structural description and does not use the term "means," Mianyang BOE argues that this claim element is means-plus-function. Mianyang BOE is incorrect. As with the "first driver" term, because the claim term here does not use the word "means," there is a presumption that § 112, ¶ 6 does not apply. *Williamson*, 792 F.3d at 1349. Once again, Mianyang BOE cannot rebut this presumption. The claims contain explicit language that informs a POSITA of the structure of the "second driver," and the specification further describes the structure. *See, e.g.*, Ex. A, Hatalis Decl., ¶¶ 103–07.

As with the "first driver" term, the claims themselves contain explicit language informing a POSITA of the structure of the "second driver." *First*, as with the "first driver" discussed in the previous section, the second driver is part of a "stage circuit." *See, e.g.*, '593 Patent, claim 1 ("the stage circuit comprising . . . a second driver to control the voltage of the first node in accordance with the signal of the second input terminal and the voltage of the second node."). The second driver is therefore a circuit, and specifically part of a stage circuit of a scan driver. *See* Ex. A, Hatalis Decl., ¶ 103. As Dr. Hatalis explains, scan drivers were a known type of circuit structure. *Id.* ¶ 70. This fact, combined with the description of the circuit's function, provides sufficient structure for a POSITA. *See, e.g.*, *MIT*, 462 F.3d at 1355.

Second, the claims describe how the second driver interacts with the other components of the invention, further informing a POSITA of the second driver's structure. *See Finjan*, 2015 WL 7770208, at *9–11. For example, the claims contain limitations requiring that the second driver

"control the voltage of the first node in accordance with the signal of the second input terminal and the voltage of the second node." '593 Patent, claims 1, 15. The first node, second node, and the second input terminal are all structural elements, and these claim limitations describe how the second driver interacts with these elements. Ex. A, Hatalis Decl., ¶ 107.

Third, "the Court may consider relevant dependent claims to determine if they add limitations that either describe particular features or flesh out whether the term has a particular structural meaning." *Halverson*, 2022 WL 4464165, at *6 (internal quotation marks and citations omitted); *see also Align Tech.,* 2021 WL 2320139, at *16 ("Further, the fact that a dependent claim recites that 'the optics expander unit comprises a grating or a microlens array' . . . further suggests that § 112 ¶ 6 does not govern here[.]"). Here, the dependent claims specify particular structures for the second driver, including several transistors, which further inform a POSITA of the first driver's structure. *See* '593 Patent, claims 8, 22. Claim 22, for example, recites that "the second driver includes":

> a sixth transistor between the first node and the second input terminal, the sixth transistor having a gate electrode coupled to the second node; and
> a seventh transistor between the first node and a second power supply, the second power supply having a lower voltage than the first power supply, the seventh transistor having a gate electrode coupled to the second input terminal.

'593 Patent, claim 22.

The remainder of the specification of the '593 Patent further confirms that the second driver is not a means-plus-function limitation. Figure 3, for example (a portion of which is reproduced and annotated below) shows an exemplary stage circuit, including the second driver.

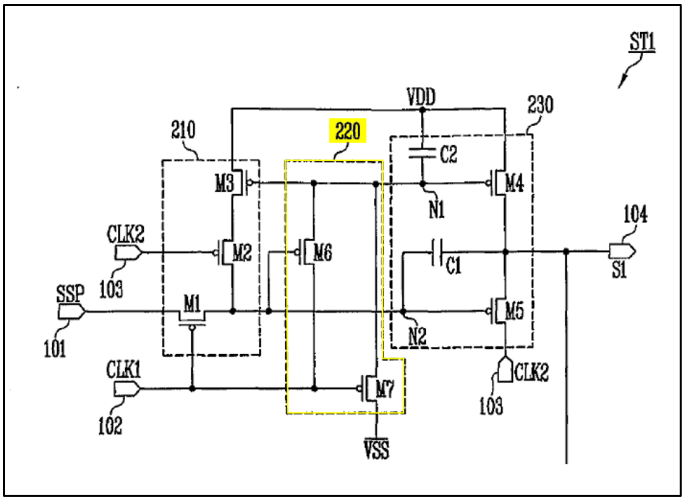

’593 Patent, Fig. 3 (highlighting added). In Figure 3, the “second driver” is element 220. The Figure shows all of the structural elements described above, including the first node N1, the second node N2, and the second input terminal CLK1. *See, e.g.*, Ex. A, Hatalis Decl., ¶ 105. The Figure further shows how the second driver connects to all of these elements. *See, e.g.*, *id.*, ¶¶ 106–07. This further confirms that the “second driver” would convey sufficient structure to a skilled artisan. *See, e.g.*, ’593 Patent, 5:63–6:40 (describing the configuration of the first and second drivers in the embodiment of Figure 3).

As discussed in the previous section, extrinsic evidence also shows that a “driver” had a well understood meaning to a POSITA, referring to class of structures, and that the ’593 Patent uses the term “driver” consistently with that common understanding. As explained by Dr. Hatalis, the plain and ordinary meaning of a “driver,” as reflected by the IEEE Dictionary, is “a program, circuit or device used to power or control” something. Ex. A, Hatalis Decl., ¶ 71 (citing IEEE Dictionary). The dictionaries cited by Mianyang BOE’s expert further support this conclusion. *See supra*, § B; *see also* Ex. B, Foty Decl., ¶ 103.

Thus, the language of the claims, the specification, and the extrinsic evidence all support the conclusion that the “second driver” term refers to structure. Mianyang BOE cannot overcome

the presumption that the term is not written in means-plus-function form. Indeed, as noted previously, Mianyang BOE's expert, Dr. Foty, offered only a generalized opinion on the meaning of the term "driver" in isolation and failed to address the actual claim language of "a second driver to control the voltage of the first node in accordance with the signal of the second input terminal and the voltage of the second node," as well as the surrounding claim language and dependent claims. *See* Ex. B, Foty Decl., ¶¶ 99–105.

Mianyang BOE's proposal should also be rejected for the additional reason that it attempts to read additional limitations into the claim that have no support in either the claims or the specification. As with the "first driver" discussed above, Mianyang BOE asserts that "[r]egardless of whether this limitation is determined to be a § 112(6) limitation or not, the claimed function requires that: the voltage of the first node is the voltage of the output of the second driver." Once again, Mianyang BOE is attempting to rewrite the claim to require the voltage of the first node "is" the output of the second driver, when the claim requires only that the second driver "controls" the voltage of the second node.

Moreover, Mianyang BOE's proposal is inconsistent with the teachings of the specification and would exclude a preferred embodiment. *See Vitronics*, 90 F.3d at 1583 (a construction that excludes a preferred embodiment is "rarely, if ever, correct"). As Dr. Hatalis explains, "the second driver does not control the voltage all by itself." Ex. A, Hatalis Decl., ¶ 99. Instead, "'the second capacitor C2'—which is not part of the second driver, but rather is part of the outputting unit—'charges the voltage applied to the first node N1.'" *Id.* (quoting '593 Patent, 5:60–62). Mianyang BOE's proposal conflicts with the specification as well as the claim language.

Thus, the term "a second driver to control the voltage of the first node in accordance with the signal of the second input terminal and the voltage of the second node" should be given its

plain and ordinary meaning, wherein a "driver" is "an electronic circuit used to power or control something," as Complainant and Staff propose. The term is not subject to § 112, ¶ 6.

D. "node" (claims 1, 15)

Complainant's Construction	Staff's Construction	Mianyang BOE and MobileSentrix's Construction
a point or area of interconnection between two or more components	a point of interconnection between two or more components	a point or area directly between two or more elements, with no intervening elements

The term "node" is common in electronics and had a well-understood meaning to a POSITA. Both Complainant's expert, Dr. Hatalis, and Mianyang BOE's expert, Dr. Foty, cite the IEEE dictionary, which defines a "node" as follows: "Within a circuit, a point of interconnection between two or more components such as input or output terminals." Ex. A, Hatalis Decl., ¶ 59 (quoting IEEE Dictionary); Ex. B, Foty Decl., ¶ 91 (same). Further, the parties appear to agree that a "node" is the region in a circuit where two or more components are connected. Both experts explained that a node need not be a single point in the geometric sense, and in a device can constitute the area where the components are connected. *See* Ex. A, Hatalis Decl., ¶ 60 ("[I]n a physical device, a node is not limited to a single point."); Ex. B, Foty Decl., ¶ 92 ("[I]n an electronic circuit that has, e.g., wiring to connect component terminals together, the wire used to create the connection (and thus a node) will not be infinitely-small – but rather will comprise some region of space that contains all the conductive material of that wiring segment.").[1] Consistent with this understanding, the term node should be construed to mean "a point or area of

[1] Although Staff's proposal does not refer explicitly to "area," Complainant understands that Staff has no objection to the parties' inclusion of "or area" in their proposed constructions.

interconnection between two or more components," which is the IEEE definition, with the clarification that a node can be an area.

The dispute over this term centers on Mianyang BOE's proposal (now joined by MobileSentrix) to impose an additional requirement that a node must have "no intervening elements." This addition is unwarranted and inappropriate. As explained by Dr. Hatalis, "the plain meaning of 'node' does not have any such requirement." Ex. A, Hatalis Decl., ¶ 61. Such a requirement is not part of the IEEE definition, nor of any other dictionary definition that has been identified. Mianyang BOE's expert did not cite any textbook, treatise, or any other reference that defines "node" to have such a requirement. Mianyang BOE's expert identified no intrinsic evidence to support imposing this requirement. There is nothing in the claims, the specification, or the prosecution history that states a node must have "no intervening elements." *Id.*

The term "node" has a well-established plain and ordinary meaning, and it should be accorded that meaning as Complainant and Staff propose. Mianyang BOE's efforts to impose an additional requirement should be rejected.

IV. U.S. Patent No. 7,414,599

The '599 Patent teaches novel pixel circuits that drive the picture elements ("pixels") of organic light emitting diode ("OLED") displays, in particular those used in mobile devices. A typical OLED display is composed of millions of pixels, each of which emits light when current is applied to its organic electroluminescent material. '599 Patent, 1:23–50; Ex. A, Hatalis Decl., ¶¶ 33–34. The '599 Patent is directed to active matrix OLED ("AMOLED") displays, in which each pixel is driven individually by its own pixel circuit. The brightness of each pixel depends on the amount of current provided to the electroluminescent material which, in turn, depends on characteristics of the pixel circuit. '599 Patent, 1:23–50; Ex. A, Hatalis Decl., ¶¶ 33–34.

One of the key technical barriers that delayed wide-scale adoption of OLED displays was a "voltage deviation problem" in these circuits that led to poor image quality. '599 Patent, 1:51. Across the transistors comprising the pixel circuits of AMOLED displays, there inevitably will be variations in the properties of those transistors—including variations in the threshold voltages of the transistors supplying current to the electroluminescent material—as a result of manufacturing tolerances and due to changes in the transistors over the life of the display. Ex. A, Hatalis Decl., ¶ 34. These differences "can produce a nonuniform display in which some pixels may appear brighter or darker" than others when set to emit at the same brightness. *Id.* While display companies and academic research groups long struggled to find a solution, the inventors of the '599 Patent devised novel pixel circuits that, among other things, detect and self-compensate for these variations and solve other problems that plagued AMOLED pixel circuits, improving the overall image quality.

The '599 Patent issued from an application filed on July 6, 2004, which claims priority to a Korean application filed on July 7, 2003. As Dr. Hatalis explains, a POSITA of the '599 Patent "would have had a relevant technical degree in Electrical Engineering, Computer Engineering, Materials Science, Physics, or the like, and experience in active matrix display design and electroluminescence." Ex. A, Hatalis Decl., ¶ 18. Mianyang BOE's expert proffers a definition—"a Bachelor's degree in electrical engineering or similar discipline, along with 2–3 years of circuit design experience," Ex. B, Foty Decl., ¶ 11—that entails only "circuit design experience" and no experience with active matrix display design or electroluminescence. The '599 Patent is directed to AMOLED displays, and Mianyang BOE's definition does not accurately reflect the experience of those working in the field or the technology of the '599 Patent. *See* Ex. A, Hatalis Decl., ¶ 20.

A. "fifth transistor" and "sixth transistor" (claim 1)

Complainant's Construction	Staff's Construction	Mianyang BOE and MobileSentrix's Construction
Plain and ordinary meaning, i.e., "fifth transistor" means a transistor that is not a first, second, third, or sixth transistor as defined in claim 1, and "sixth transistor" means a transistor that is not a first, second, third, or fifth transistor as defined in claim 1	Indefinite	Mianyang BOE takes no position

Claim 1 of the '599 Patent recites a pixel circuit in an organic light emitting device comprising, among other features, "a first transistor," "a second transistor," "a third transistor," "a fifth transistor," and a "sixth transistor." The claim describes each of the transistors labeled as a "first," a "second," a "third," a "fifth," and a "sixth" transistor, but does not discuss a "fourth" transistor. Dependent claim 2 describes "a fourth initialization transistor," which the parties agree refers to a fourth transistor, which is an initialization transistor. Complainant's proposal merely clarifies that the "fifth transistor" is a transistor that is not a first, second, third, or sixth transistor as defined in claim 1, and likewise the "sixth" transistor is a transistor that is not a first, second, third, or fifth transistor as defined in claim 1. While Staff has contended that the omission of an explicit reference to a "fourth transistor" in claim 1 renders that claim indefinite, none of the Respondents agree; Respondents instead choose to take no position as to this term. Claim 1 is not indefinite for two reasons.

First, there is no requirement that numbering of elements in a patent claim be consecutive. The Federal Circuit has recognized that numbering of elements in patent claims is a claim-drafting tool to label elements so as to distinguish them from one another. For example, in *3M Innovative*

Properties Co. v. Avery Dennison Corp., the Federal Circuit explained that "the use of the terms 'first . . . pattern' and 'second . . . pattern' is equivalent to a reference to 'pattern A' and 'pattern B,' and should not in and of itself impose a serial or temporal limitation onto claim 1." 350 F.3d 1365, 1371 (Fed. Cir. 2003). The court reasoned that "[t]he use of the terms 'first' and 'second' is a common patent-law convention to distinguish between repeated instances of an element or limitation." *Id.* Subsequently, in *Gillette Co. v. Energizer Holdings, Inc.*, the Federal Circuit observed that consistent with this convention, the claim at issue was "clearly not using the ordinals—first, second, third—to show a consecutive numerical limit but only to distinguish or identify the various members of the group." 405 F.3d 1367, 1373 (Fed. Cir. 2005). Under this authority, the recitations of a "fifth" and a "sixth" transistor in claim 1 is entirely proper: the references to particular transistors that are a "fifth" transistor and a "sixth" transistor are labels that identify those transistors as being distinct from the other recited transistors of claim 1. The ordinal labels applied to the transistors in claim 1 simply convey to a POSITA that each of the recited transistors is distinct from the others.

The absence of a reference in claim 1 to a "fourth" transistor does not cut against this understanding, nor does it present an issue of indefiniteness. Indeed, Complainant is aware of no case in which a claim has been found indefinite for using non-consecutive numbering of elements. In *Comcast Cable Communications, LLC v. Sprint Communications Co.*, where a claim recited a "second communication system" but not a "first communication system," a district court specifically rejected an argument that the claim was indefinite for lacking explicit discussion of every consecutive ordinal. *See* 38 F. Supp. 3d 589, 616 (E.D. Pa. 2014). The court held that a claim reciting a "second communication system" but not a "first communication system," was not indefinite. *Id.*

The surrounding claim language, specification, and prosecution history bolster the conclusion that claim 1 is not indefinite. Immediately following claim 1, dependent claim 2 describes a "fourth" transistor in the pixel circuit according to claim 1. The specification teaches novel pixel circuits that contain a number of transistors, and uses terms such as "first" transistor, "second" transistor, "third" transistor, etc., simply to identify particular transistors and distinguish them from other transistors in the circuit. *See, e.g.*, '599 Patent, 3:65–4:3. A skilled artisan would not attach particular meaning or significance to the labels "first" or "second." Moreover, during prosecution, the patent examiner expressed no concern with the reference in claim 1 to a "fifth" and "sixth" transistor without an explicit reference to a "fourth" transistor. Indeed, this numbering resulted from a claim amendment after the examiner found that what at the time had been a dependent claim would be allowable if rewritten in independent form. Ex. C at SDC-1351-00000482, -0494 (amendment dated Oct. 12, 2007).

Second, even if the recitation of a "fifth" and a "sixth" transistor were interpreted to mean that those transistors must be numerically the fifth and sixth transistors found in a pixel circuit—*i.e.*, even if one attributed to that labeling a meaning in terms of the number of elements—the claim would not be indefinite. Rather, if the recitation of "fifth" and "sixth" transistors were read to mean that these transistors are numerically the fifth and sixth transistor in the circuit, then the claim implicitly requires another transistor, a "fourth transistor," that is distinct from the other enumerated transistors but whose features are otherwise unspecified. This was the approach taken by a district court in construing the term "second exhaust fan" in a device claim that did not recite a "first exhaust fan." *See Seiko Epson Corp. v. Coretronic Corp.*, No. 06-06946, 2008 WL 2095505 (N.D. Cal. May 16, 2008) (vacated in part on other grounds). The court found that a "first exhaust fan" was implicit in the claim, in part because "the problem to be solved is created by the presence

of two fans," and construed the claim to embody that requirement. *Id.* , at *4; *see id.* ("The use of a 'second exhaust fan' inherently teaches the use of more than one fan in the projector."). Notably, neither the parties nor the court in *Seiko Epson* considered the lack of a consecutive ordinal to itself create an issue of indefiniteness. Here, claim 1 is a comprising claim, making clear that the device may include elements beyond those explicitly recited in the claim. At most, the reference to a "fifth" and a "sixth" transistor could support construing the claim to require another transistor that is not a first, second, third, fifth, or sixth transistor—i.e., an additional transistor that would be the "fourth" transistor. But interpreting the claim in this way would, as in *Seiko Epson*, not present any issue of indefiniteness.

Thus, the absence of a reference to a "fourth" transistor in claim 1 does not render the recitations of a "fifth" and "sixth" transistor indefinite. There is no evidence that a POSITA would have been unable to ascertain the claim scope with reasonable clarity, and no Respondent contends otherwise. The terms "fifth transistor" and "sixth transistor" in claim 1 should be given their plain meaning as Complainant proposes.

B. "grounded" (claims 15, 17)

Complainant's Construction	Staff's Construction	Mianyang BOE and MobileSentrix's Construction
Plain and ordinary meaning, i.e., "coupled to a reference voltage"	connected to the voltage reference point in a circuit	connected to a 0V source

Claims 15 and 17 of the '599 Patent recite that one terminal of the electroluminescent element in the pixel circuit is "grounded." The term "grounded" and its root "ground" have a well-accepted meaning to a POSITA. *See* Ex. A, Hatalis Decl., ¶ 47. Ground is a reference voltage in a circuit. *Id.* ("The concept of a reference voltage finds a practical use in the ground voltage of a circuit. Ground represents a specific reference voltage that is usually a clearly identified point in a

circuit.") (quoting Rizzoni, Principles and Applications of Electrical Engineering, Fifth Edition, McGraw Hill, (2005)); *id.* ("Ground is a reference point in a circuit that provides a common return point to the voltage source.") (quoting Walls & Johnstone, Introduction to Circuit Analysis, West Publishing Co. (1992)). To say that a terminal is "grounded" means that the terminal is coupled to a reference voltage. *Id.*

The '599 Patent uses the terms "ground" and "grounded" consistent with this plain and ordinary meaning. The specification explains that the electroluminescent "element EL11 is connected between fifth transistor T15 and *ground voltage VSS*." '599 Patent, 2:29–31 (emphasis added). It is undisputed that "VSS" is a reference voltage. Dr. Hatalis explains this, and Mianyang BOE's expert agrees. *See* Ex. A, Hatalis Decl., ¶ 50; Ex. B, Foty Decl., ¶ 71.

Moreover, the '599 Patent's figures consistently label ground as "VSS." For example, in Figure 3, which describes a preferred embodiment, ground is identified as "VSS," as circled in red in the annotated figure below:

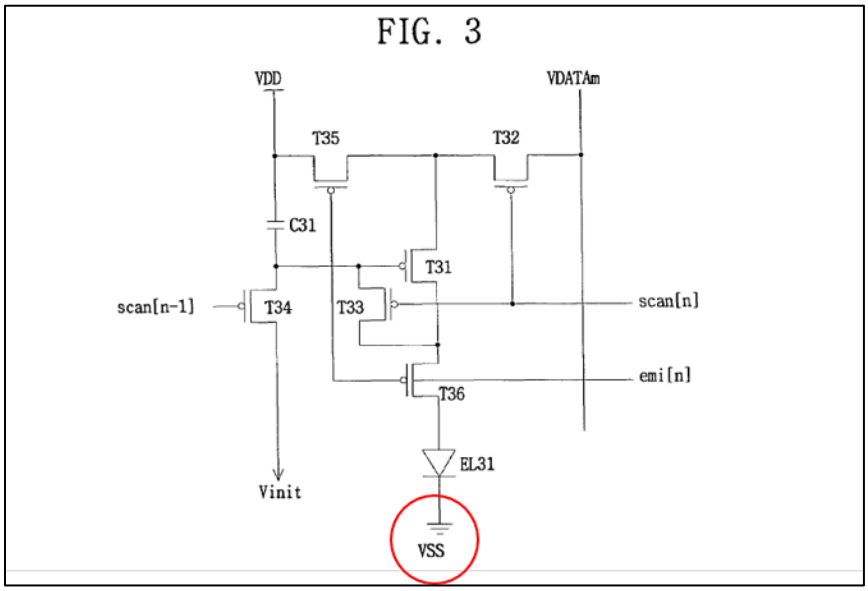

’599 Patent, Fig. 3 (annotation added). Figures 1, 5, 6, and 7 likewise label ground as “VSS.” The ’599 Patent’s teaching that in preferred embodiments the ground voltage is VSS would confirm to a POSITA that “grounded” is, in fact, used according to its plain meaning of a reference voltage.

Complainant’s construction thus gives the term “grounded” its plain and ordinary meaning in the ’599 Patent. Staff’s proposal is largely consistent with this. The difference is that Staff’s construction refers to “the” voltage reference point, as opposed to “a” reference voltage. Both Complainant’s and Mianyang BOE’s experts agree that a POSITA would appreciate that “a circuit can have multiple different ‘reference’ voltages.” Ex. A, Hatalis Decl., ¶ 50; Ex. B, Foty Decl., ¶ 71. As such, Complainant submits that the proper interpretation of “grounded” should be “coupled to a reference voltage.”

Mianyang BOE proposes to limit the term “grounded” to require that the terminal of the electroluminescent element must be connected specifically “to a 0V source.” Mianyang BOE’s proposal has no support in the specification or file history. Indeed, as Dr. Hatalis explains, Mianyang BOE’s proposal is inconsistent with the specification’s teachings. Ex. A, Hatalis Decl., ¶ 48. Mianyang BOE’s proposal is even contrary to extrinsic evidence cited by its expert, Dr. Foty. Mianyang BOE’s effort to read an additional limitation into the claim should be rejected.

First, Mianyang BOE’s proposal is contrary to the intrinsic evidence. As noted above, the ’599 Patent refers to the “ground voltage VSS” in preferred embodiments. ’599 Patent, 2:29–31. As Dr. Hatalis explains, “VSS is understood to be a reference voltage” that “may have, and commonly has, a voltage different from 0V.” Ex. A, Hatalis Decl., ¶ 48. Mianyang BOE’s expert admits that “Vss represents the ‘low’ side voltage” which “*will commonly differ from 0V*,” Ex. B, Foty Decl., ¶ 58, and he cites an example of a circuit in which VSS is negative (-20 V), *see id.* A POSITA would understand that in the preferred embodiments of the ’599 Patent, the reference

voltage VSS represents the "low" side voltage and generally would *not* necessarily be zero volts. Ex. A, Hatalis Decl., ¶ 55.

There is no intrinsic evidence supporting Mianyang BOE's proposal to require that a reference voltage must be specifically zero volts. The '599 Patent does not refer to any reference voltage specifically of zero volts, let alone use language to *require* such a reference voltage. Mianyang BOE's expert did not identify any evidence from the claims, the specification, or the file history that would require ground to be zero volts.

Second, extrinsic evidence further undercuts Mianyang BOE's proposal. Mianyang BOE's expert relies entirely on extrinsic evidence in an effort to justify his argument that ground "refers to the voltage level of the Earth" which "is defined to be zero." Ex. B, Foty Decl., ¶¶ 55–56. But he conflates two distinct concepts: "ground" and "Earth ground." The Illustrated Dictionary of Electronics, for example, defines "Earth ground" as "[a] common connection to an electrode buried in the earth, such that good conductivity is maintained between the common circuit point and the earth." Ex. D at 195. The same dictionary, however, explains that "ground" is broader than "Earth ground." The definition of "ground" includes both "[a]n electrical connection to the ground"—i.e. "Earth ground"—and, alternatively, "*[t]he (usually negative) return point in a circuit*." *Id.* at 279 (emphasis added). By requiring ground to be zero volts, Mianyang BOE is attempting to rewrite "ground" as "*Earth* ground," imposing an additional limitation that has no support in the intrinsic evidence. Mianyang BOE's construction would exclude the commonly-understood definition that ground can be, and in fact is, "usually negative."

The dictionary definition of "ground" as including voltages that are "usually negative" is also supported by other extrinsic evidence cited by Mianyang BOE's expert. He cites several examples of circuits taken from Allen & Holberg's textbook, CMOS Analog Circuit Design, First

Edition. *See* Ex. B, Foty Decl., ¶¶ 58–59. These cherry-picked circuits are unrelated to the novel pixel circuit of the ’599 Patent, and thus are largely inapposite, as Dr. Hatalis explains. *See, e.g.*, Ex. A, Hatalis Decl., ¶ 55. Tellingly, however, Dr. Foty does not cite any text from the book that would require ground to be zero volts. Indeed, a later edition of the same textbook explicitly refers to ground as “the lowest circuit potential” and “the most negative supply,” further contradicting Mianyang BOE’s position. *See id.*, ¶ 56 (quoting, Allen & Holberg, CMOS Analog Circuit Design, Third Edition (2012), at 40, 57, 200). Mianyang BOE’s proposal to require a reference voltage specifically of zero volts is therefore not only inconsistent with the intrinsic evidence, but also contradicted by extrinsic evidence. Mianyang BOE’s proposal to import a limitation should therefore be rejected.

Thus, consistent with the well-accepted meaning of “ground,” as well as the intrinsic evidence, the term “grounded” should be given its plain and ordinary meaning, i.e., “coupled to a reference voltage.”

V. U.S. Patent No. 11,594,578

The ’578 Patent describes and claims novel pixel arrangement structures designed for high-resolution OLED displays in mobile devices. In an OLED display containing multiple colors of pixels, the relative number, size, arrangement, and shape of each color of pixel may affect characteristics of the display such as picture quality, power consumption, and expected lifetime. The manufacture of OLED displays is also complex, and manufacturing yield presents challenges. For example, as the ’578 Patent explains, OLED displays are commonly manufactured by depositing organic light-emitting materials using fine metal masks. ’578 Patent, 1:46–48. This process requires adequately large gaps between pixels. If pixels are too close to each other, they made bleed into one another when the organic material is deposited onto the substrate. However, the gaps between pixels lower the aperture ratio. A high aperture ratio is desirable because it can

produce a brighter display with more vibrant colors, but increasing the aperture ratio decreases the gap between pixels, making the displays difficult or impossible to manufacture using fine metal masks. As the ’578 Patent explains, “[w]hen reducing a gap between the neighboring pixels to obtain a high aperture ratio of the pixel, deposition reliability may be deteriorated.” *Id.*, 1:48–49.

The ’578 Patent teaches novel pixel arrangement structures, recognized by the AMOLED display industry and known commercially by the name “Diamond Pixel™”, that improve the aperture ratio and improve the image quality of AMOLED displays for mobile devices, while efficiently setting up the gap between the pixels and reducing manufacturing time and cost. The Diamond Pixel™ arrangement has been implemented broadly across flagship products and is now being widely copied.

The ’578 Patent issued from a continuation application claiming priority to an application filed on September 13, 2012, which claims priority to a Korean application filed on March 6, 2012. A POSITA of the ’578 Patent would have had a relevant technical degree in Electrical Engineering, Computer Engineering, Materials Science, Physics, or the like, and experience in electroluminescence and the design of active matrix displays or pixel arrangements for such displays.

A. “virtual quadrangle” (claims 23, 45, 47, 52)

Complainant and Staff’s Construction	Mianyang BOE and MobileSentrix’s Construction
quadrangle formed by imaginary lines that can be superimposed to describe relationships among pixels	Indefinite

As noted above, the ’578 Patent describes and claims novel pixel arrangement structures designed for high-resolution OLED displays. To describe features of these pixel arrangements, such as the sizes, shapes, and locations of organic light-emitting pixels that emit different colors

of light, the patent uses a number of terms familiar from geometry, such as "line," "distance," "parallel," "perpendicular," "polygon," "square," "hexagon," "octagon," "quadrilateral," and—as relevant here—"quadrangle." These are all common, well-understood words whose meaning would be understood by a POSITA.

The '578 Patent refers to a "virtual quadrangle." *See, e.g.*, '578 Patent, claims 23, 45, 47, 52. A POSITA would understand "quadrangle" to have its plain and ordinary meaning. "Quadrangle" is synonymous with "quadrilateral." *See, e.g.*, Ex. E at 1016. *See also* '578 Patent, 4:14–17 (referring to pixels having "a quadrilateral (i.e., four-sided) shape"); *id.* at 4:17–19 ("For example, in the pixel arrangement of FIG. 1, each of the first pixels 100 has the same quadrilateral shape (e.g., a square or rhombus)."); *id.* at 6:10–11 ("The plurality of first pixels 100 have the same quadrilateral shape (e.g., a parallelogram)."); *id.* at 8:35–37 ("The second pixels 200 and the third pixels 300 may have quadrilateral shapes (e.g., rhombus)."). A POSITA would further understand that a "virtual quadrangle" refers to a quadrangle formed by imaginary lines that can be superimposed onto a display to describe relationships among pixels. The quadrangle is "virtual" in the sense that the lines of the quadrangle are not physically present on the display. Rather, the "virtual" quadrangle is a construct that allows one to describe and analyze the spatial relationship among specified pixels, where the particular imaginary lines form a quadrangle.

The specification makes clear that "virtual" refers to lines that may be superimposed on a display (i.e., imaginary lines) to illustrate the relationship among pixels and shapes formed from such lines. For example, Figure 1 of the '578 Patent provides an example of a "virtual square" (i.e., a type of "virtual quadrangle"). In Figure 1, shown with yellow highlighting below, the virtual square is labeled "VS" and is drawn with dotted lines. These dotted lines indicate that the two

pixels labeled 200 and the two pixels labeled 300 define the four corners of the virtual square, and that the lines are not a physical part of the display:

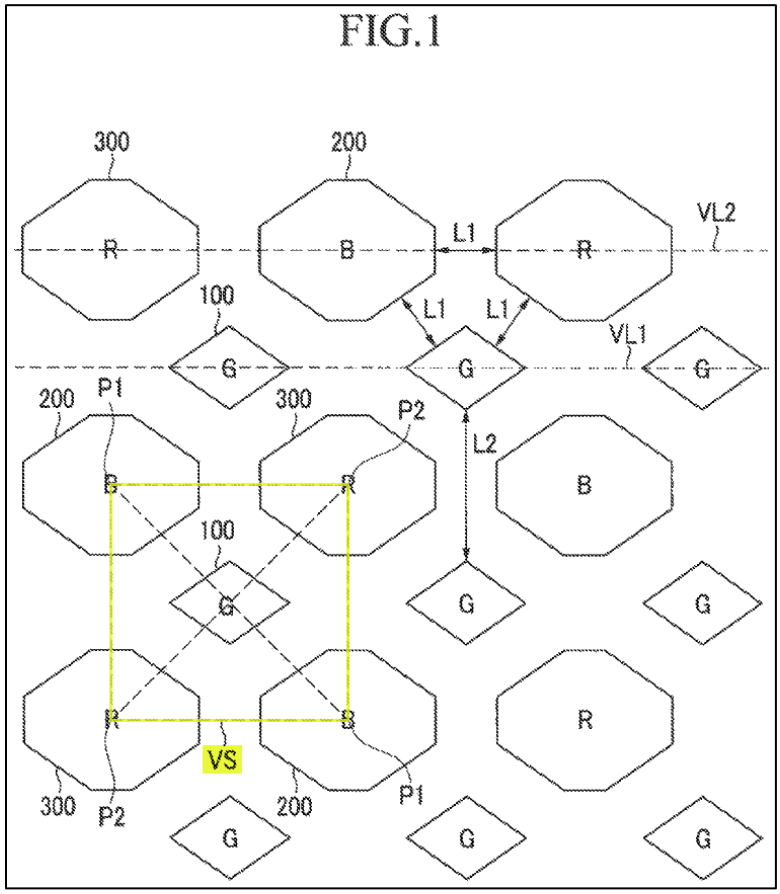

See, e.g., ’578 Patent, 4:14–31 (explaining that “[i]n the pixel arrangement of FIG. 1 . . . . [t]he second pixels 200 are arranged diagonally with respect to the first pixels 100 such as at first vertices P1 along one diagonal of virtual square VS having one of the first pixels 100 as a center point (or center) of the virtual square VS”). As another example, the specification refers to “virtual lines,” namely “virtual straight line[s]” VL1 and VL2. These are also drawn with dotted lines in Figure 1 to indicate that pixels are arranged in rows that form straight lines. *See id.* at 4:19–22 (describing “virtual straight line VL1”); *id.* at 4:55–57 (describing “virtual straight line VL2”).

Complainant and Staff agree that the term “virtual quadrangle” carries its plain and ordinary meaning in the ’578 Patent. Mianyang BOE asserts that the term is indefinite. Although

Respondent MobileSentrix agreed until days ago that the term carries its plain and ordinary meaning, it now joins Mianyang BOE's assertion. To meet its burden, Mianyang BOE would need to present clear and convincing evidence of indefiniteness. Yet it has identified no evidence to support its assertions. Notably, although Mianyang BOE served an expert report on claim construction, its expert did *not* offer any opinion that "virtual quadrangle" is indefinite. Even apart from the glaring absence of any expert opinion that the term "virtual quadrangle" would be indefinite to a POSITA, the facts demonstrate that Respondents cannot carry their burden.

As an initial matter, the '578 Patent issued from a continuation application that traces back to U.S. Patent No. 9,818,803, which is also asserted in this Investigation. Claim 1 of the '803 Patent recites a pixel arrangement structure in which a first pixel has a center "coinciding with a center of a virtual square." '803 Patent, claim 1. No party—not even Mianyang BOE or MobileSentrix—has suggested that the term "virtual square" is indefinite. There is no reason why the meaning of "virtual quadrangle" would be any less clear.

Not only is the meaning of "virtual quadrangle" clear based on the plain language of the claims, it was discussed during prosecution of the '578 Patent. Claims must be "viewed and understood in the context of the specification and the prosecution history." *Nature Simulation Sys. Inc. v. Autodesk, Inc.*, 50 F.4th 1358, 1363 (Fed. Cir. 2022). For example, in response to the examiner's request that the applicant clarify the meaning of the limitation "wherein only one of the second pixels and the third pixels is included in a virtual quadrangle containing outer edges comprising some of the edges of a group of four neighboring ones of the plurality of first pixels," Ex. F at SDC-1351-00133593 (office action dated Apr. 7, 2021), the patentee even provided an annotated version of Figure 5 of the patent showing a "virtual quadrangle" in an exemplary embodiment of the claim that ultimately issued as claim 45:

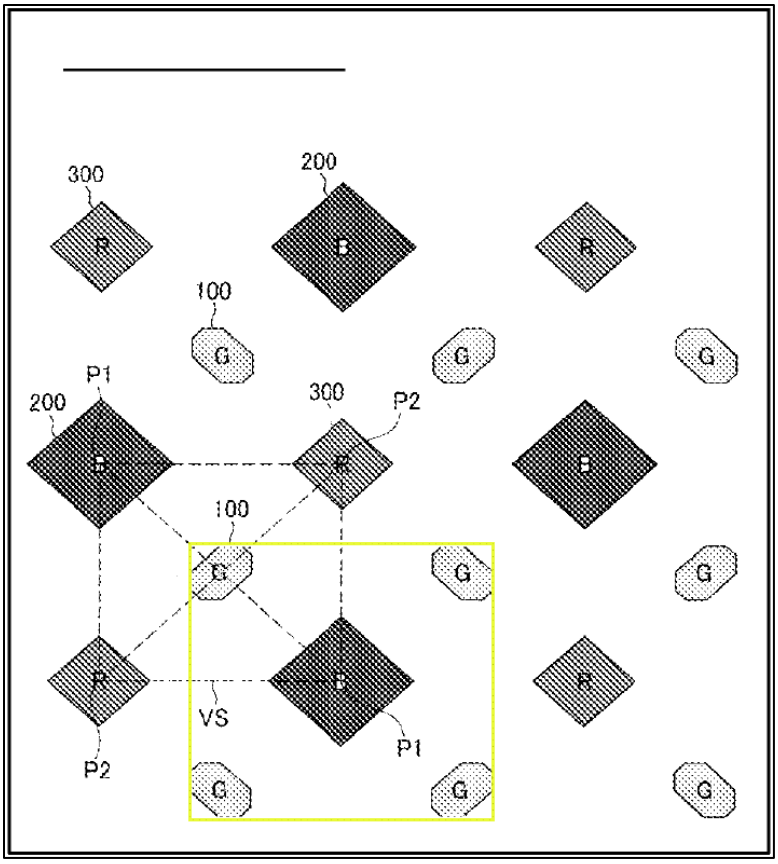

Ex. F at SDC-1351-00133607 (amendment dated May 3, 2021) (highlights added).[2]

The examiner had no difficulty identifying virtual quadrangles in prior art references and comparing the prior art to the pertinent claims—both before *and* after the applicant provided clarification of the specific limitation using the term "virtual quadrangle" described above.[3] This further indicates that the term "virtual quadrangle" has a well-understood meaning to a person of skill in the art. *Sonix Tech.*, 844 F.3d at 1379 (the examiner's ability "to understand and apply the

[2] In the original figure, the virtual quadrangle was shown in yellow. Ex. F at SDC-1351-00133606 (amendment dated May 3, 2021). Because the yellow lines are difficult to see in a black-and-white reproduction, the virtual quadrangle has been redrawn.

[3] *See, e.g.*, Ex. F at SDC-1351-00133102–03 (office action dated Oct. 25, 2019), -3320 (office action dated Apr. 30, 2020), -3391–92 (office action dated Oct. 27, 2020), -3422–23 (office action dated Feb. 1, 2021), -3622 (office action dated May 25, 2021), -3626, -3954 (office action dated Nov. 24, 2021), -3958, -4037 (office action dated May 11, 2022), -4059–65, -4070.

term in performing a search for prior art and make an initial rejection" is evidence that the term is not indefinite).

Moreover, the term "virtual quadrangle" is commonly used in the art in describing arrangements of pixels in a display. For example, U.S. Patent No. 9,887,247, issued to Novatek Microelectronics Corp. describes and claims "[a] sub-pixel arrangement structure of an organic light emitting diode display" in which "[e]ach four sub-pixels of the plurality of sub-pixels form a virtual quadrangle." Ex. G, abstract, claim 1. Similarly, U.S. Patent No. 11,114,016, issued to KunShan Go-Visionox Opto-Electronics, describes and claims "[a] pixel arrangement structure" in which sub-pixels "form a plurality of virtual polygons" including "a first virtual quadrangle." Ex. H, claim 1. Even BOE Technology Group, which is related to Mianyang BOE, uses the term in its patent applications. To take one example, in U.S. Patent Application 2022/0310711, BOE claims "[a] pixel array, comprising a plurality of sub-pixels," in which the sub-pixels "are sequentially connected to form a second virtual quadrangle." Ex. I, claim 1. The widespread use of "virtual quadrangle" in patents directed to pixel arrangement structures by a variety of companies reinforces that the term would be well understood by a POSITA.

Thus, consistent with the plain language of the claim, the teachings of the specification, and the prosecution history, the term "virtual quadrangle" should be construed to mean "quadrangle formed by imaginary lines that can be superimposed to describe relationships among pixels" as Complainant and Staff propose. Mianyang BOE's indefiniteness assertion should be rejected.

B. "wherein a shortest distance between any two of the group of four neighboring ones of the plurality of first pixels is greater than a shortest distance between the only one of the second pixels and the third pixels included in the virtual quadrangle and a nearest one of the second pixels or the third pixels in a direction perpendicular to any side of the virtual quadrangle" (claim 45)

Complainant and Staff's Construction	Mianyang BOE and MobileSentrix's Construction
wherein a shortest distance between any two of the four neighboring first pixels (as defined previously in the claim) is greater than a shortest distance between the second or third pixel included in the virtual quadrangle and a nearest one of the second or third pixels in a direction perpendicular to any side of the virtual quadrangle	Indefinite

Claim 45 of the '578 Patent recites that "only one of the second pixels and the third pixels is included in a virtual quadrangle containing outer edges comprising some of the edges of a group of four neighboring ones of the plurality of first pixels." '578 Patent, claim 45. As discussed in the previous section, during prosecution of the '578 Patent, the patentee provided an annotated copy of Figure 5 showing a "virtual quadrangle." That figure is reproduced below, with additional coloring to highlight the various claim elements.

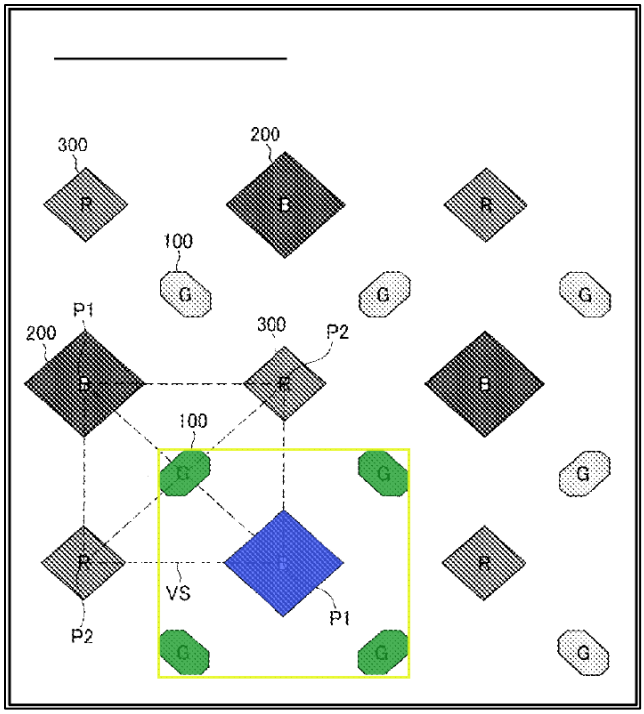

Ex. F at SDC-1351-00133607 (amendment dated May 3, 2021) (highlights added). In the example provided by this figure, the green pixels (labeled "G") are the "first pixels," the blue pixels (labeled "B") are the "second pixels," and the red pixels (labeled "R") are the "third pixels." The yellow rectangle is the "virtual quadrangle," and the highlighted blue pixel is therefore the recited "only one of the second pixels and the third pixels included in the virtual quadrangle." The four highlighted green pixels surrounding the blue pixel comprise the "group of four neighboring ones of the plurality of first pixels." As shown in the figure, the yellow rectangle contains outer edges comprising some of the edges of the green pixels.

In the claim language at issue here, claim 45 further recites that "a shortest distance between any two of the group of four neighboring ones of the plurality of first pixels is greater than a shortest distance between the only one of the second pixels and the third pixels included in the virtual quadrangle and a nearest one of the second pixels or the third pixels in a direction perpendicular to any side of the virtual quadrangle." This claim language has a plain meaning, as

Complainant and Staff agree. As Complainant and Staff propose, this claim language means that "a shortest distance between any two of the four neighboring first pixels (as defined previously in the claim) is greater than a shortest distance between the second or third pixel included in the virtual quadrangle and a nearest one of the second or third pixels in a direction perpendicular to any side of the virtual quadrangle." This construction flows directly from the claim language itself, whose length owes to its precision.

In terms of the figure above, the "shortest distance between any two of the group of four neighboring ones of the plurality of first pixels" is the shortest distance between any two of the highlighted green pixels. The "shortest distance between the only one of the second pixels and the third pixels included in the virtual quadrangle and a nearest one of the second pixels or the third pixels" is the distance between the highlighted blue pixel and the nearest red or blue pixel outside the quadrangle. These two distances are shown, for example, in the annotated figure below. The distance between green pixels is annotated as "d_1." The distance between the highlighted blue pixel and the nearest red or blue pixel is annotated as "d_2."

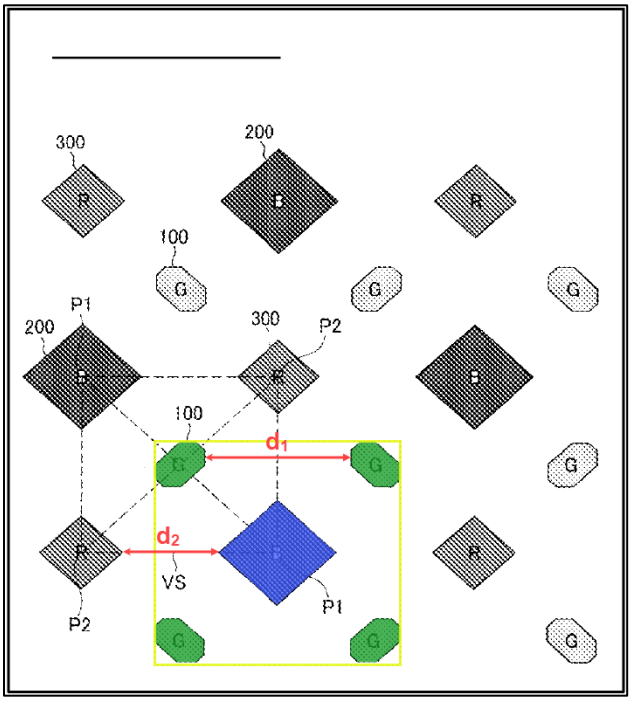

Ex. F at SDC-1351-00133607 (amendment dated May 3, 2021) (highlights and annotations added). The claim limitation at issue conveys that the distance "d_1" is greater than the distance "d_2."

Despite the clear meaning of this claim limitation, Mianyang BOE asserts that it is indefinite. There is nothing indefinite about this limitation (and until days ago even Respondent MobileSentrix agreed that it carries its plain and ordinary meaning). A POSITA would have no difficulty identifying the recited pixels, drawing the virtual quadrangle, and then measuring and comparing the specified distances. Mianyang BOE would need to present clear and convincing evidence of indefiniteness, yet it has identified no evidence to support their assertions. Indeed, Mianyang BOE's own expert on claim construction offered no opinion that this term is indefinite, and MobileSentrix did not submit an expert report on claim construction.

Complainant and Staff's construction, which represents the plain meaning of this limitation, should be adopted.

Dated: June 13, 2023

/s/ Jeffrey H. Lerner

Sturgis M. Sobin
Jeffrey H. Lerner
Jared R. Frisch
Jessica C. Hill
Matthew Kudzin
Paul J. Wilson
Derek J. Andros
Daniel W. Cho
Tarek J. Austin
Natalie M. Ritchie
Kee Young Lee
Scott C. Burger
Yong Joon Kwon
Allyson C. Corigliano
COVINGTON & BURLING LLP
One CityCenter, 850 Tenth Street, N.W.
Washington, DC 20001
Telephone: +1 202-662-6000

Brian G. Bieluch
COVINGTON & BURLING LLP
1999 Avenue of the Stars
Los Angeles, CA 90067-4643
Telephone: +1 424-332-4800

Amy Bond
Heng Gong
COVINGTON & BURLING LLP
The New York Times Building
620 Eighth Avenue
New York, NY 10018-1405
Telephone: +1 212 841 1000

Michael K. Plimack
COVINGTON & BURLING LLP
Salesforce Tower
415 Mission Street
San Francisco, CA 94105-2533
Telephone: +1 415-591-6000

Scott A. Schrader
COVINGTON & BURLING LLP
22nd Floor, Meritz Tower
382, Gangnam-daero, Gangnam-gu, Seoul
Republic of Korea
Telephone: +82-2-6281-0000

Counsel for Complainant Samsung Display Co., Ltd.

Petitioner Ex 1009, p. 57
BOE v. Samsung, IPR2024-00620

CERTIFICATE OF SERVICE

I, Danute D. Abrishami, certify that on June 13, 2023, copies of the foregoing COMPLAINANT'S OPENING CLAIM CONSTRUCTION BRIEF were delivered, pursuant to Commission regulations, to the following interested parties as indicated:

The Honorable Lisa Barton Secretary to the Commission U.S. INTERNATIONAL TRADE COMMISSION 500 E Street, SW Washington, DC 20436	*Via* EDIS
The Honorable Bryan F. Moore Administrative Law Judge U.S. INTERNATIONAL TRADE COMMISSION 500 E Street, SW Washington, DC 20436	*Via* BOX and E-Mail: Moore337@usitc.gov
Anne Goalwin Michael Maas Office of Unfair Import Investigations U.S. INTERNATIONAL TRADE COMMISSION 500 E Street, S.W. Washington, DC 20436	*Via* BOX and E-Mail: anne.goalwin@usitc.gov; Michael.Maas@usitc.gov
Kristopher L. Reed KILPATRICK TOWNSEND & STOCKTON LLP 2001 Ross Avenue, Suite 4400 Dallas, TX 75201 Matthew D. Aichele RUSS AUGUST & KABAT 800 Maine Avenue, SW, Suite 200 Washington, DC 20024	*Counsel for Respondents Apt-Ability, LLC d/b/a MobileSentrix and Mobile Defenders, LLC* *Via* E-Email: maichele@raklaw.com; mobilesentrix@raklaw.com; MobileSentrix-Samsung-1351@kilpatricktownsend.com

Petitioner Ex 1009, p. 58
BOE v. Samsung, IPR2024-00620

Merritt R. Blakeslee THE BLAKESLEE LAW FIRM 226 Lakeside Drive Boothbay Harbor, Maine 04538	*Counsel for Respondents DFW Imports LLC d/b/a DFW Cellphone and Parts; Electronics Universe, Inc. d/b/a Fixez.com; Electronics Universe, Inc. Repairs Universe, LLC; eTech Parts Plus, LLC; Gadgetfix Corp.; Injured Gadgets, LLC; LCTech International Inc. d/b/a SEGMobile.com; Parts4Cells, Inc.; Parts4LCD; Phone LCD Parts LLC; Wholesale Gadget Parts, Inc.; and Captain Mobile Parts* *Via* E-Email: mrb@blakeslee-law.com
Jordan L. Coyle, Esq. ORRICK, HERRINGTON & SUTCLIFFE LLP Columbia Center 1152 15th Street, NW Washington, DC 20005	*For Respondent Intervenor Mianyang BOE Optoelectronic Technology Co., Ltd.* *Via* E-Email: BOE-1351-Service@orrick.com
Respondent Mengtor Inc. 3612 Arden Dr, #E, El Monte, California 91731	*Via Overnight Mail*
Respondent Group Vertical, LLC 678 Front Ave NW Suite 135, Grand Rapids, Michigan 49504	*Via Overnight Mail*
Respondent Sourcely Plus LLC 549 S 48th Street, Suite 107 Tempe, Arizona 85281	*Via Overnight Mail*

/s/ *Danute D. Abrishami*
Danute D. Abrishami
Senior Patent/ITC Case Manager
COVINGTON & BURLING LLP
One CityCenter, 850 Tenth Street, NW
Washington, DC 20001
dabrishami@cov.com | 202.662.6573