US 20030132931A1

(19) United States

(12) Patent Application Publication (10) Pub. No.: US 2003/0132931 A1

Kimura et al. (43) Pub. Date: Jul. 17, 2003

(54) SEMICONDUCTOR DEVICE AND DRIVING METHOD THEREOF

(76) Inventors: **Hajime Kimura**, Atsugi (JP); **Yoshifumi Tanada**, Atsugi (JP)

Correspondence Address:
JOHN F. HAYDEN
Fish & Richardson P.C.
11th Floor
1425 K Street, N.W.
Washington, DC 20005-3500 (US)

(21) Appl. No.: **10/283,330**

(22) Filed: **Oct. 30, 2002**

(30) **Foreign Application Priority Data**

Oct. 30, 2001 (JP) 2001-333575
Oct. 10, 2002 (JP) 2002-298062

Publication Classification

(51) **Int. Cl.**[7] **G09G 5/00**

(52) **U.S. Cl.** **345/212**

(57) **ABSTRACT**

Brightness irregularities that develop in a light emitting device due to is persion among pixels in the threshold values of TFTs used for supplying electric current to light emitting devices become obstacles to improved image quality of the light emitting device. As an image signal input to a pixel from a source signal line, a desired electric potential is applied to a gate electrode of a TFT for supplying electric current to an EL device, through a TFT having its gate and drain connected to each other. A voltage equal to the TFT threshold value is produced between the source and the drain of the TFT **105**. An electric potential in which the image signal is offset by the amount of the threshold value is therefore applied to the gate electrode of the TFT. Further, TFTs are disposed in close proximity to each other within the pixel, so that dispersions in the TFT characteristics do not easily develop. A desired drain current can thus be supplied to the EL device even if there is dispersion in the threshold values of the TFTs among pixels, because this is offset by the threshold value of the TFT.

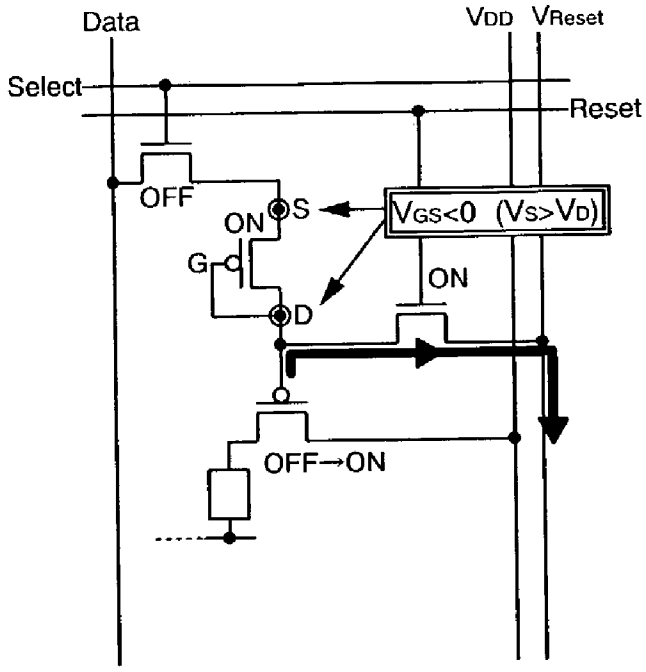

Fig.1A

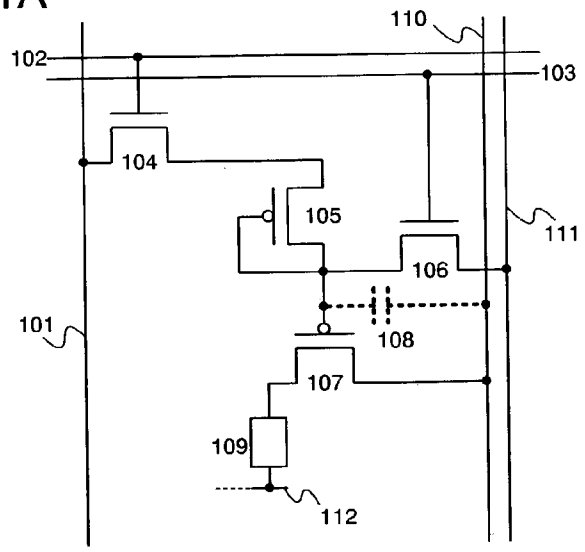
110
102
103
104
105
111
106
101
108
107
109
112

Fig.1B

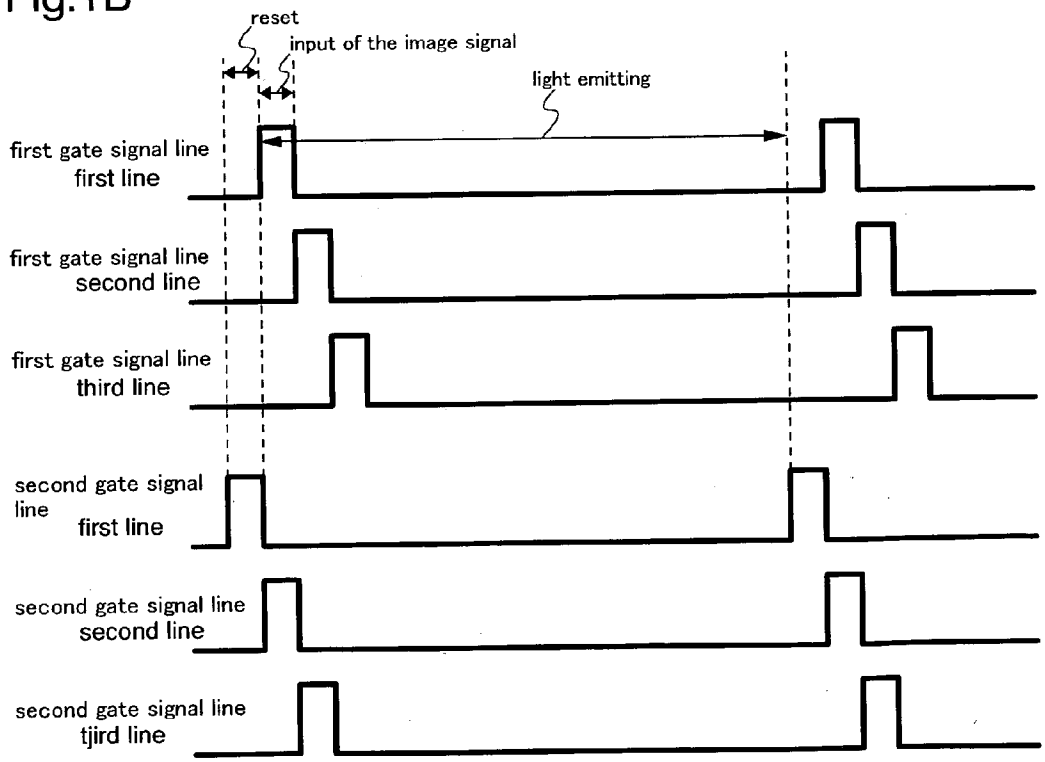
reset
input of the image signal
light emitting
first gate signal line
first line
first gate signal line
second line
first gate signal line
third line
second gate signal
line
first line
second gate signal line
second line
second gate signal line
tjird line

Fig.2A

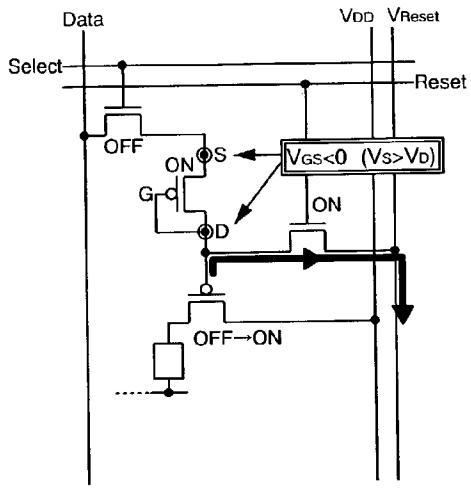

Fig.2B

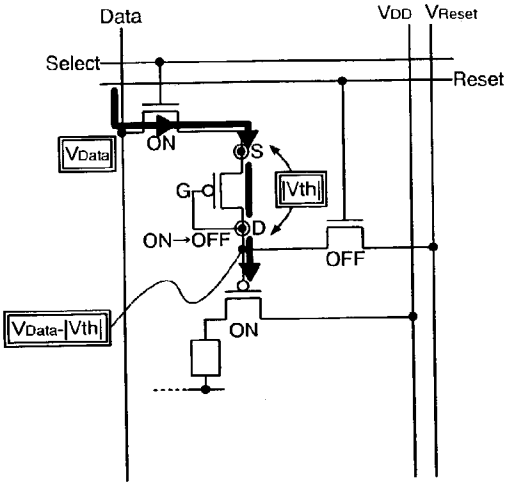

Fig.2C

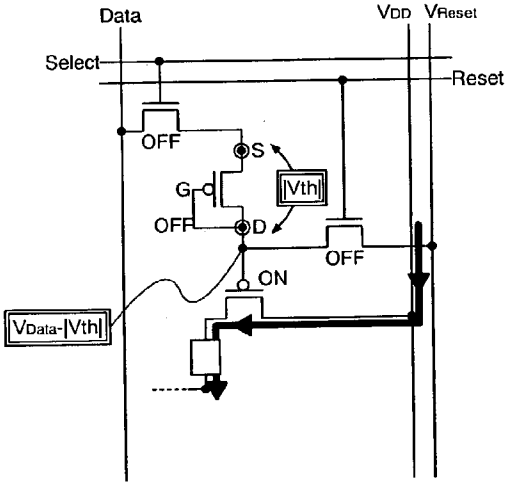

Fig.3A

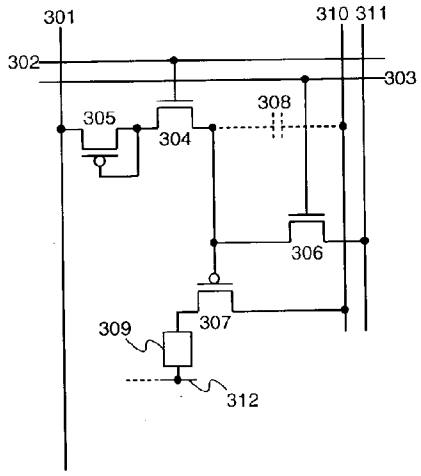

Fig.3B

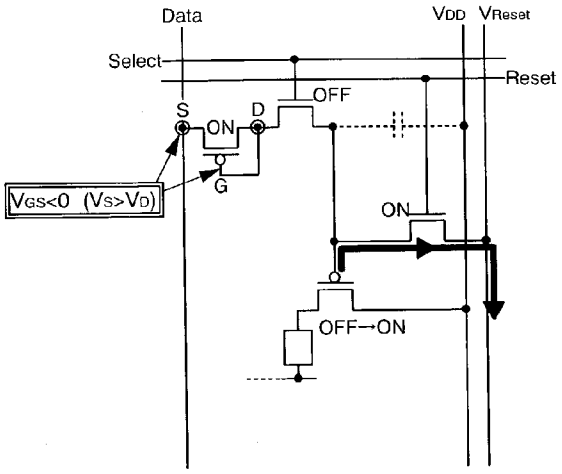

Fig.3C

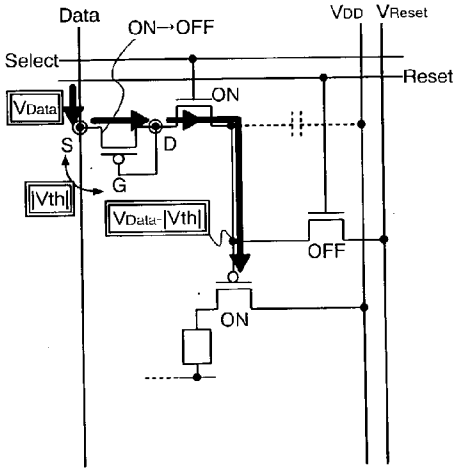

Fig.3D

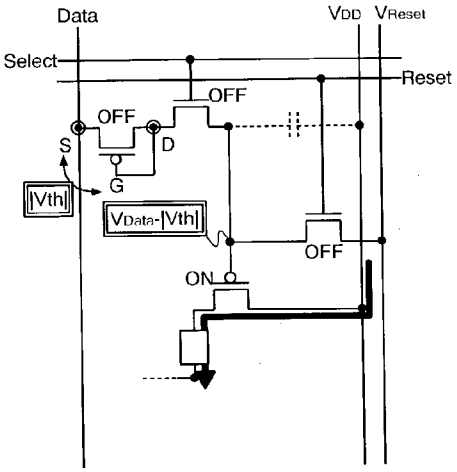

Fi.4A

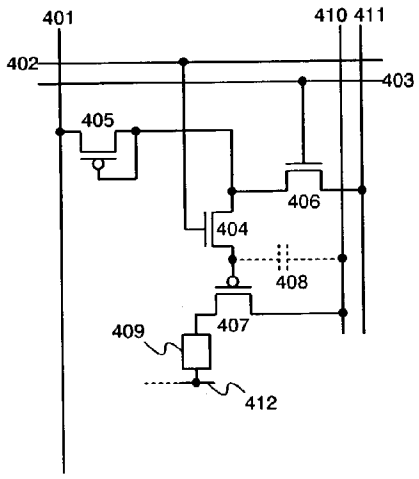

Fig.4B

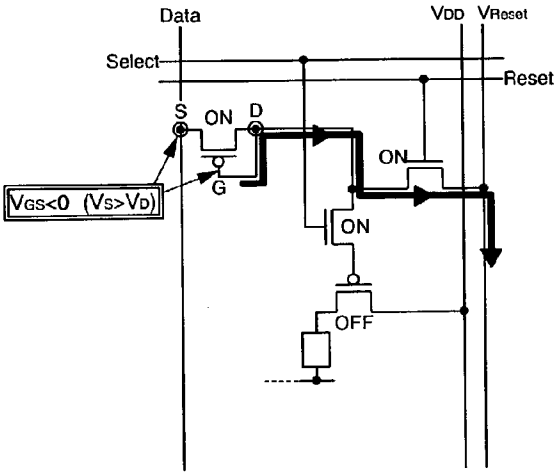

Fig.4C

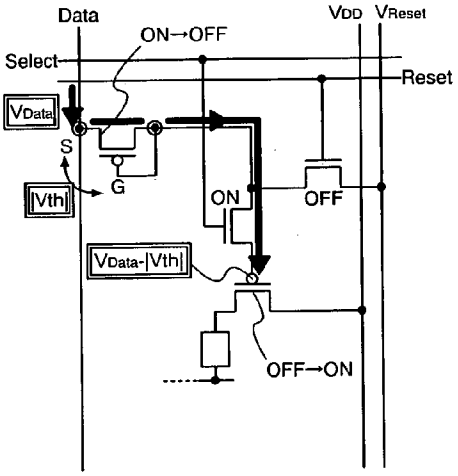

Fig.4D

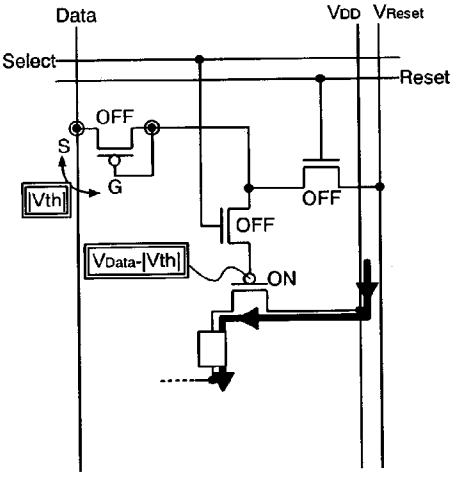

Fig.5A

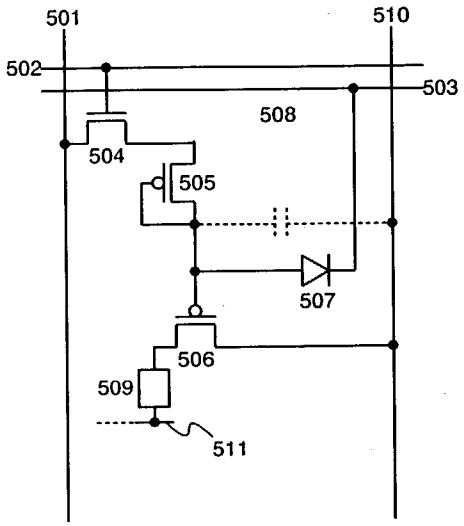

Fig.5B

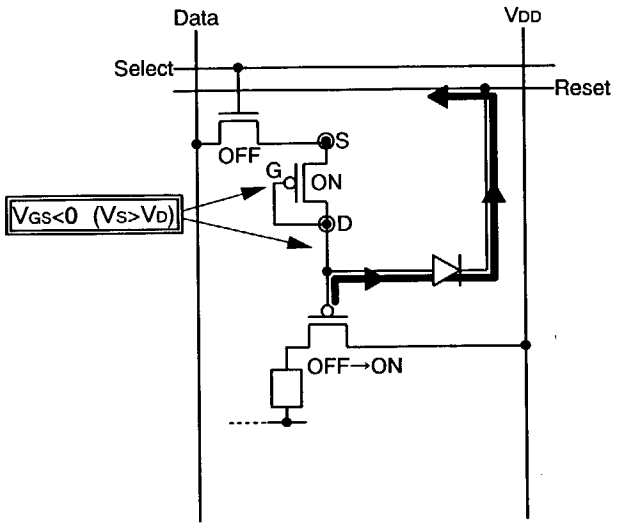

Fig.5C

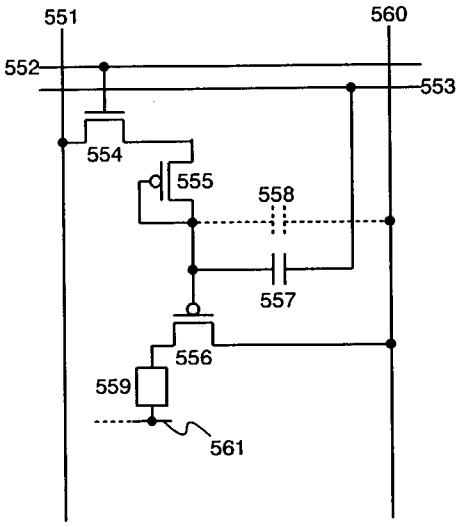

Fig.5D

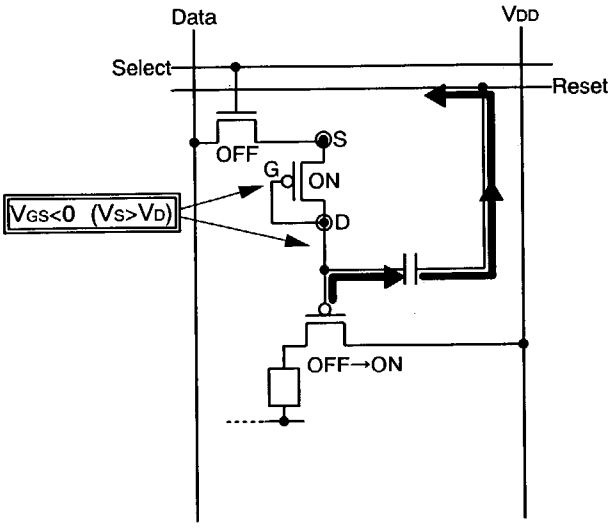

Fig.6A

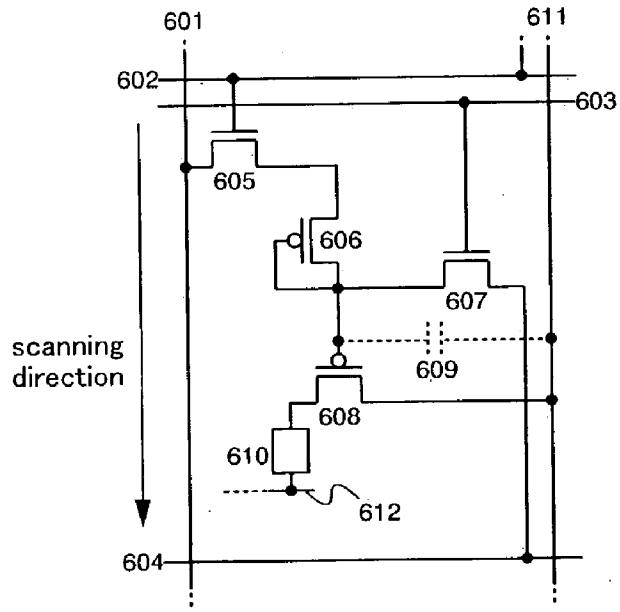
601
611
602
603
605
606
607
scanning direction
609
608
610
612
604

Fig.6B

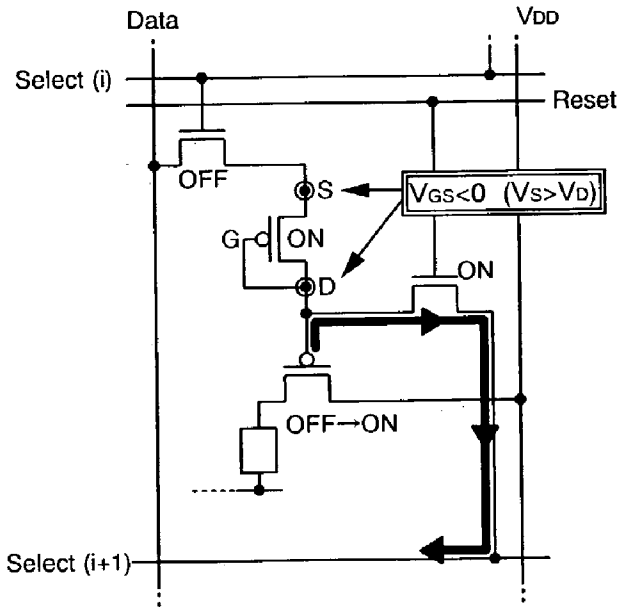
Data
VDD
Select (i)
Reset
OFF
S
VGS<0 (VS>VD)
G
ON
D
ON
OFF→ON
Select (i+1)

Fig.7A

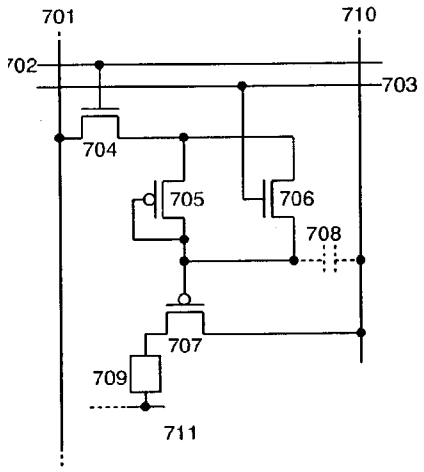

Fig.7B

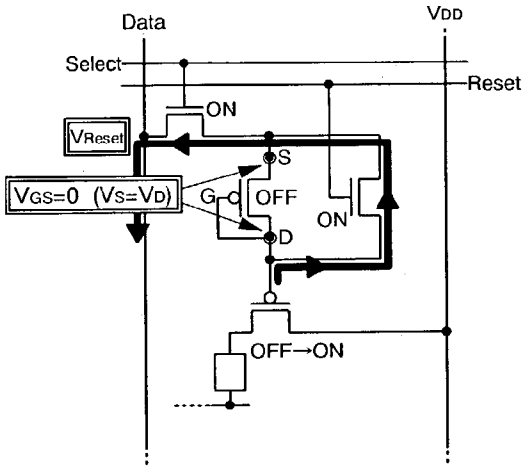

Fig.7C

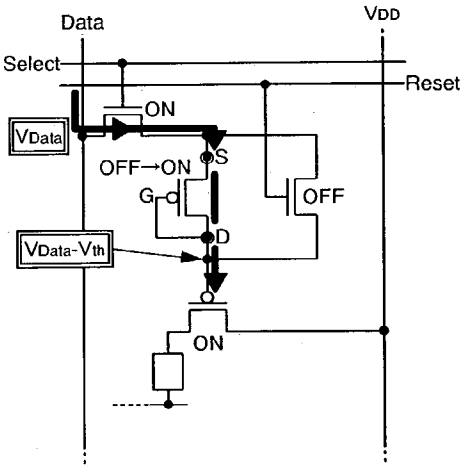

Fig.7D

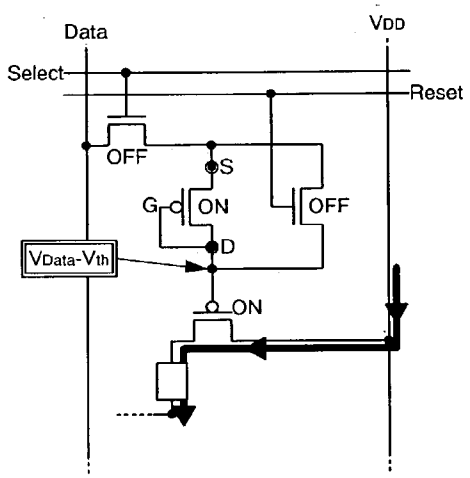

Fig.7E

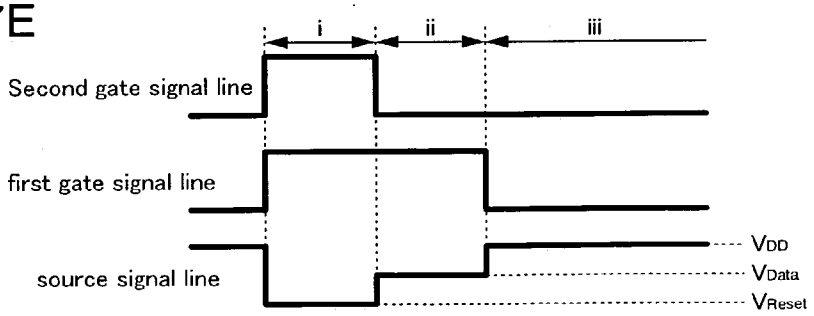

Fig.8A

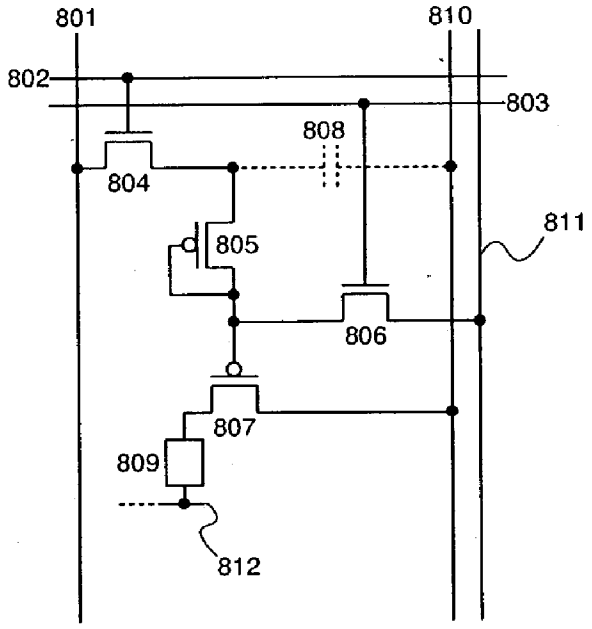
801
810
802
803
808
804
805
811
806
807
809
812

Fig.8B

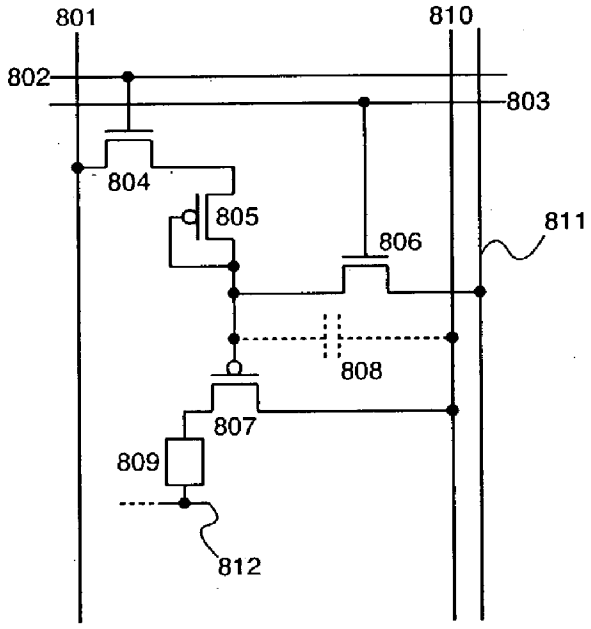
801
810
802
803
804
805
806
811
808
807
809
812

Fig.9A

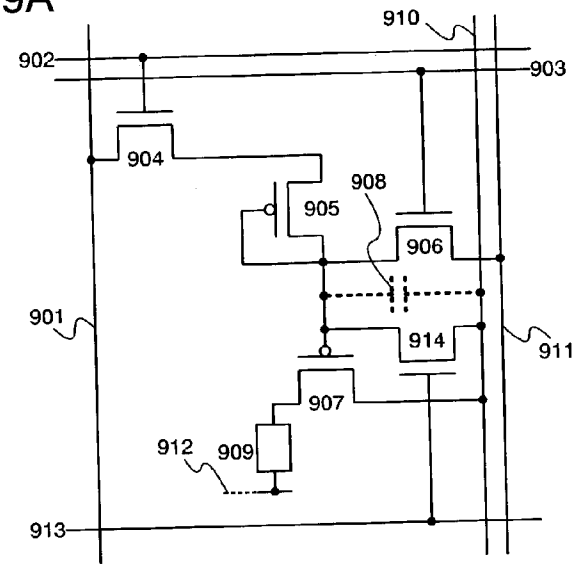

Fig.9B

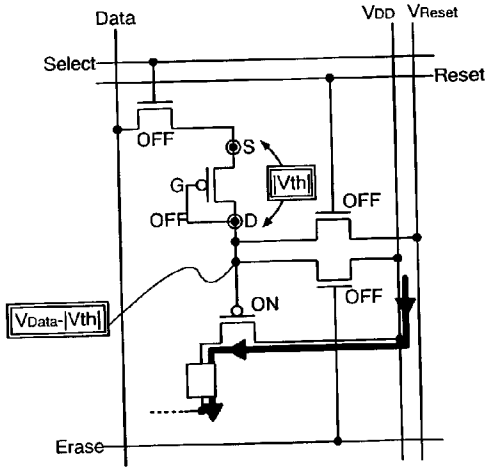

Fig.9C

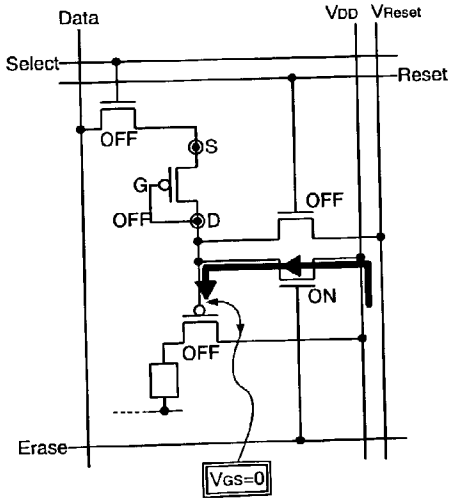

Fig.10A

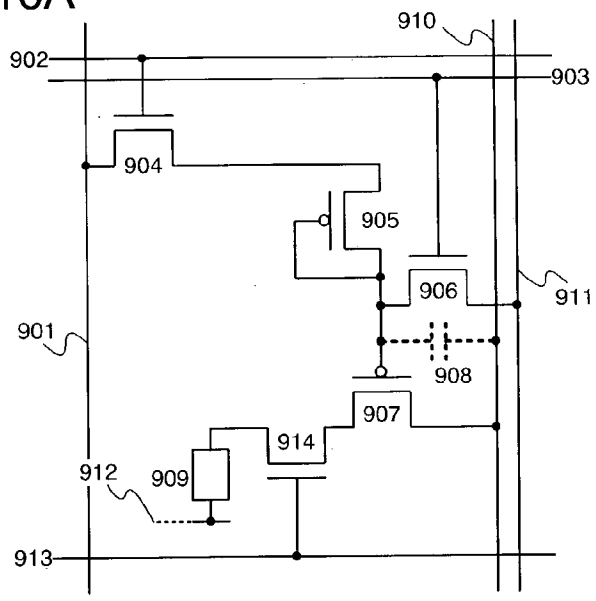

Fig.10B

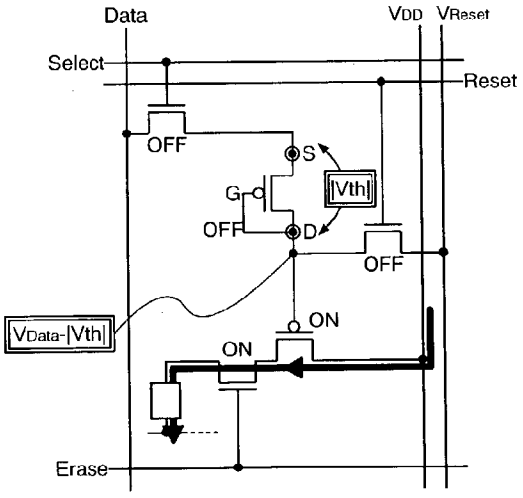

Fig.10C

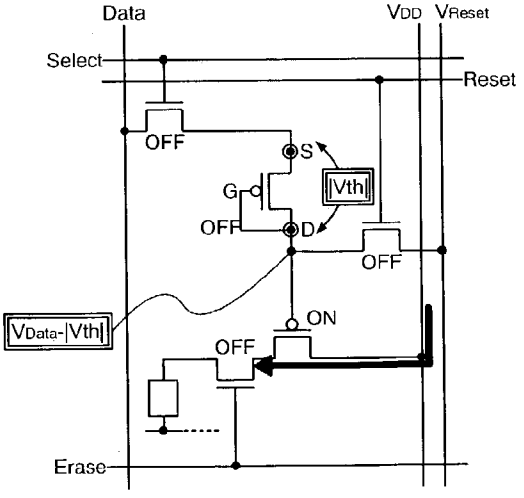

Fig.11A

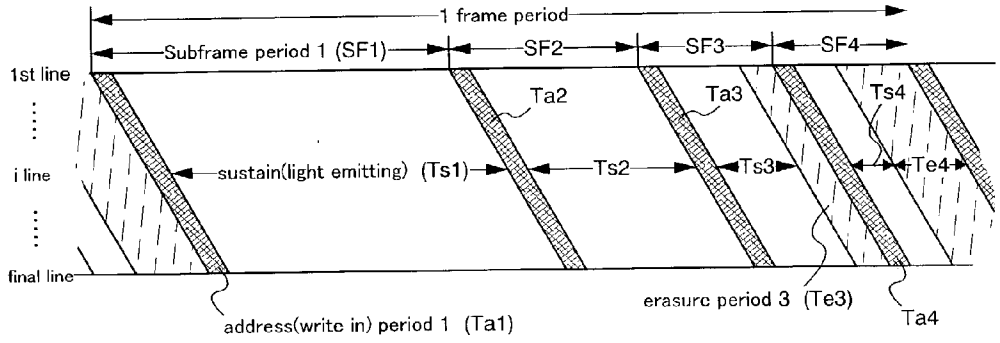

Fig.11B

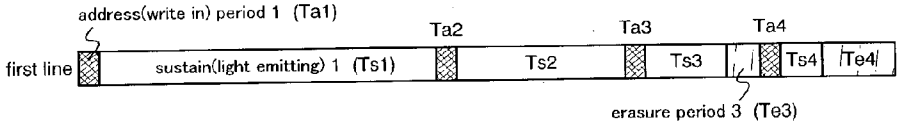

Fig.11C

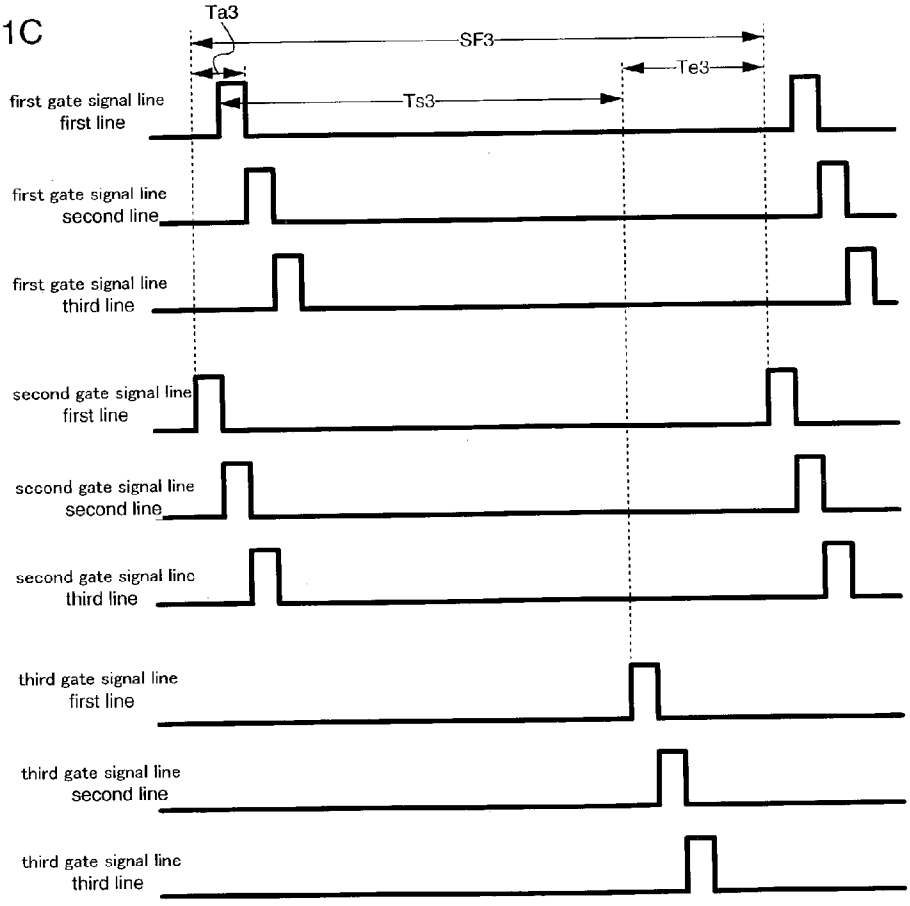

Fig.12A

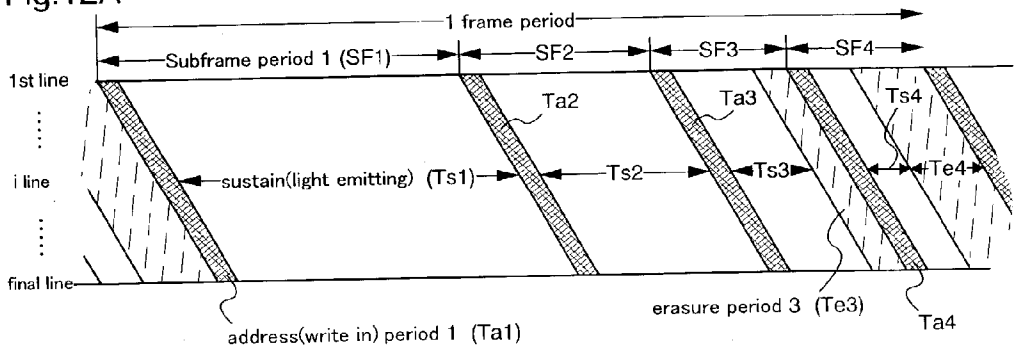

Fig.12B

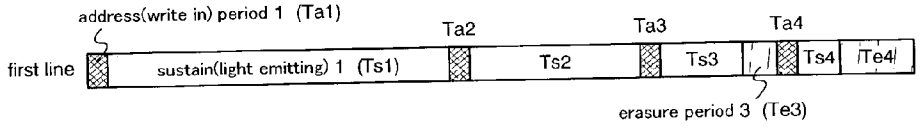

Fig.12C

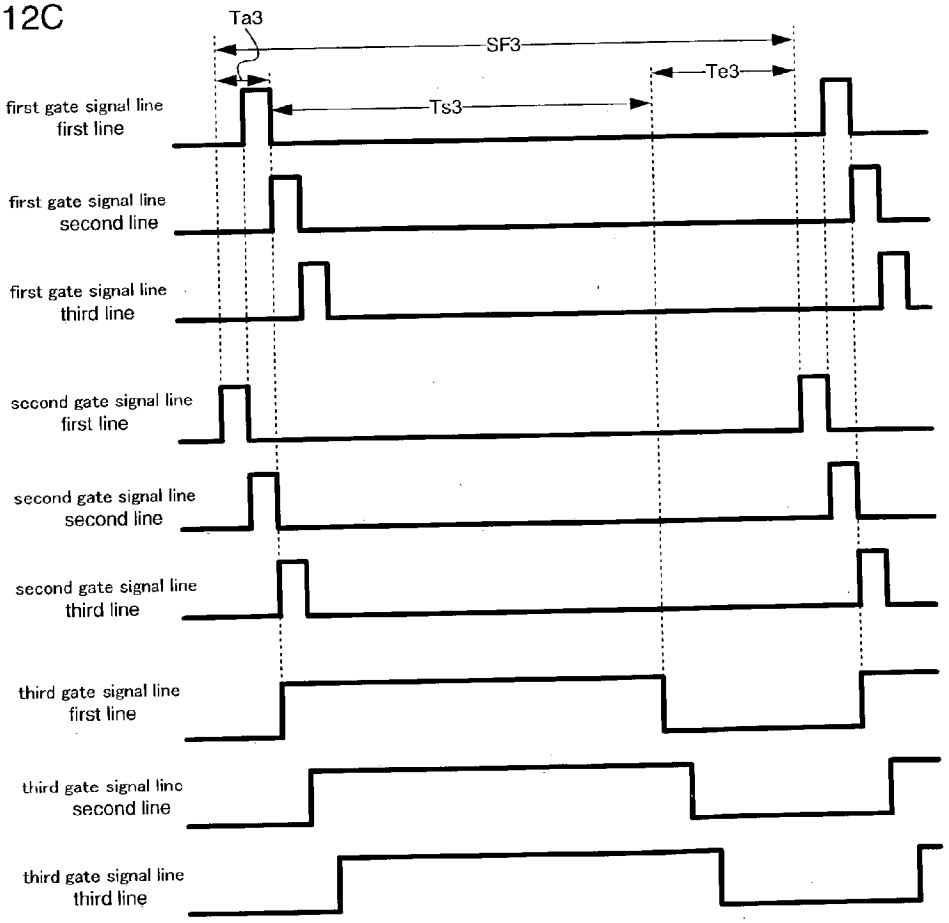

Fig.13A

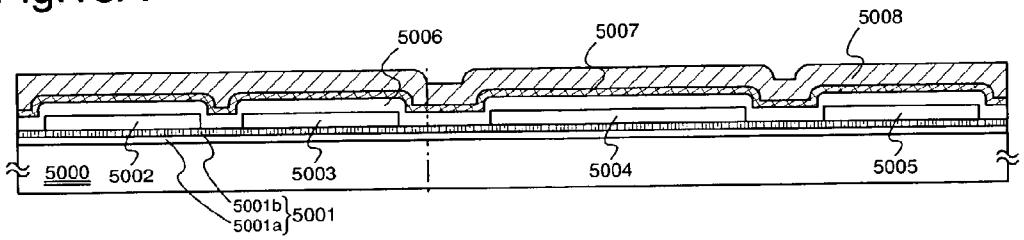

Fig.13B

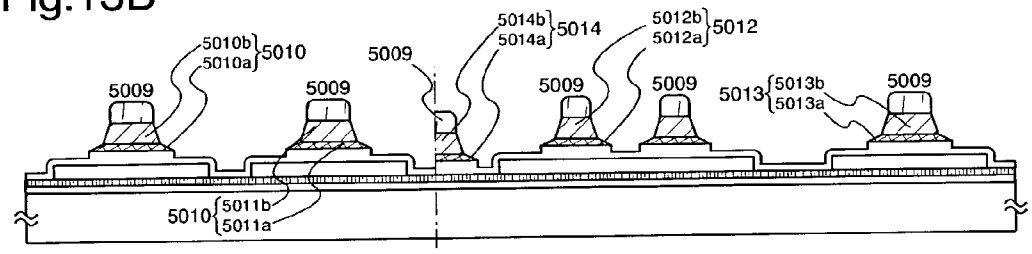

Fig.13C

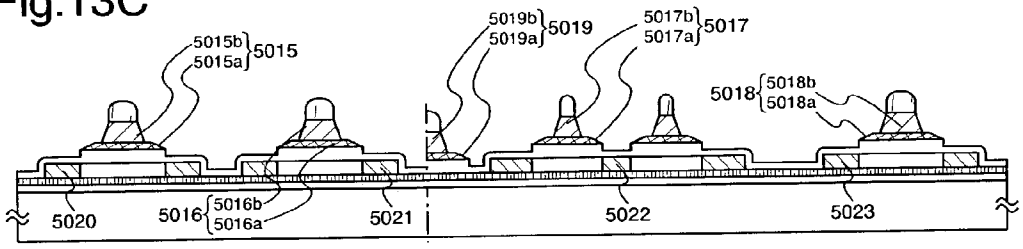

Fig.13D

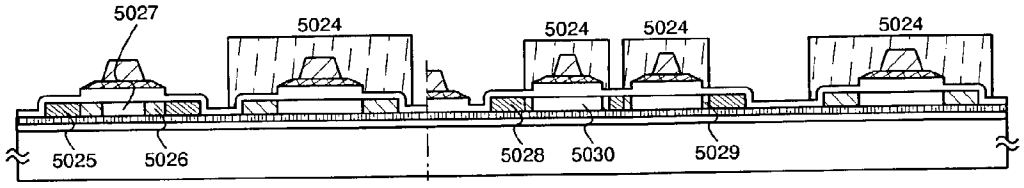

Fig.14A

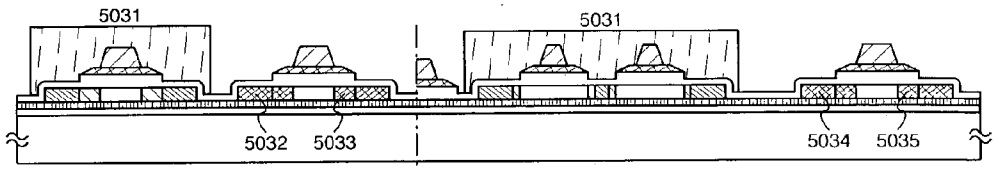

Fig.14B

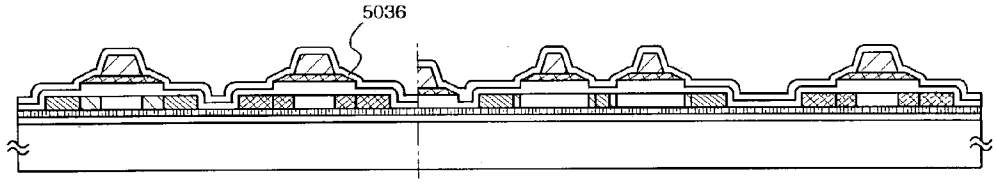

Fig.14C

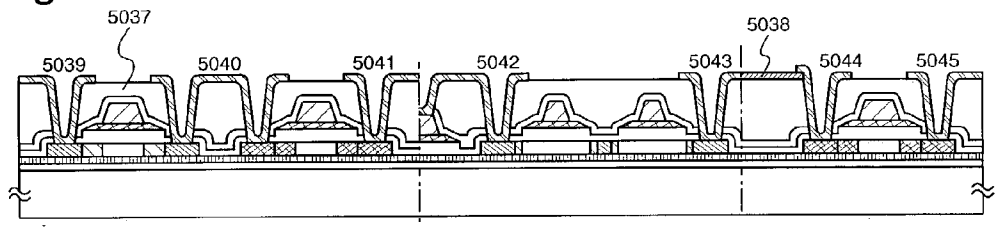

Fig.14D

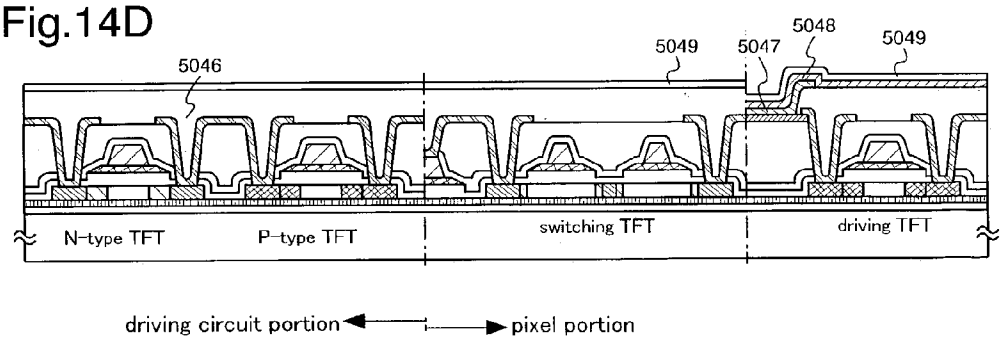

Fig.15A

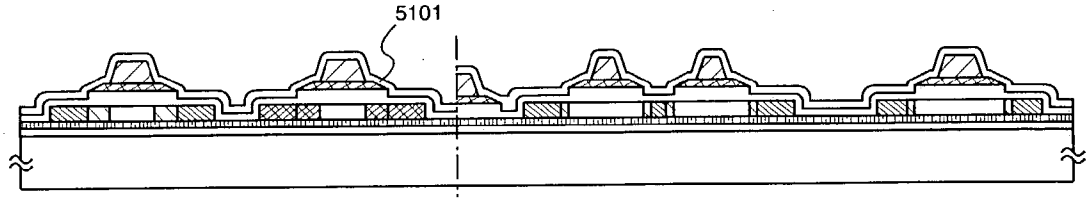

Fig.15B

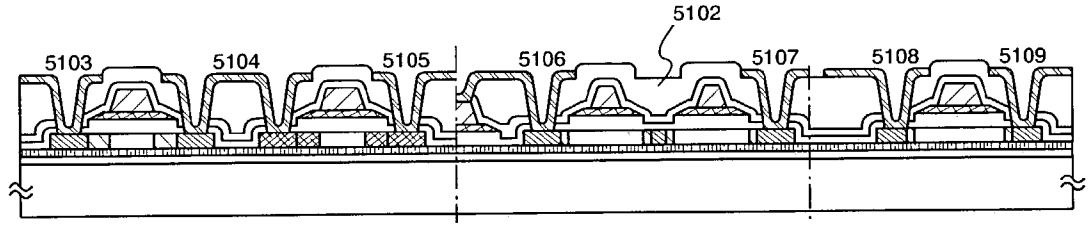

Fig.15C

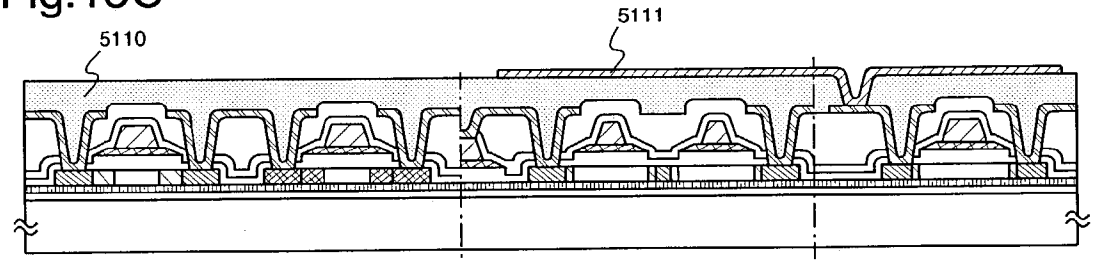

Fig.15D

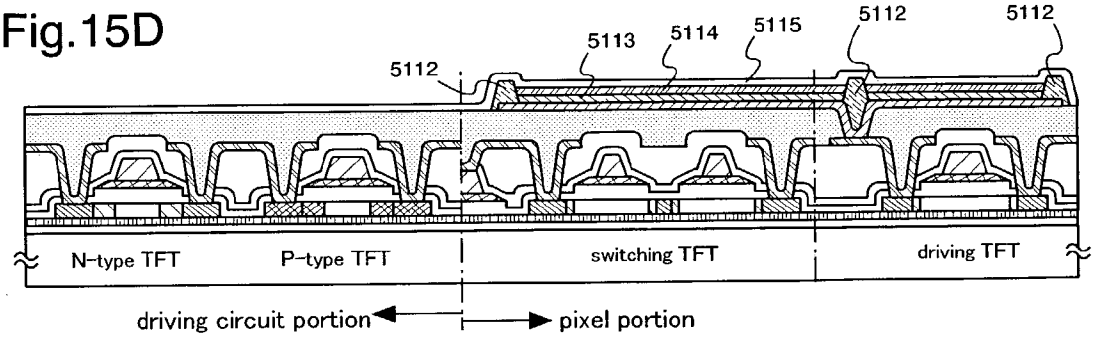

Fig.16A

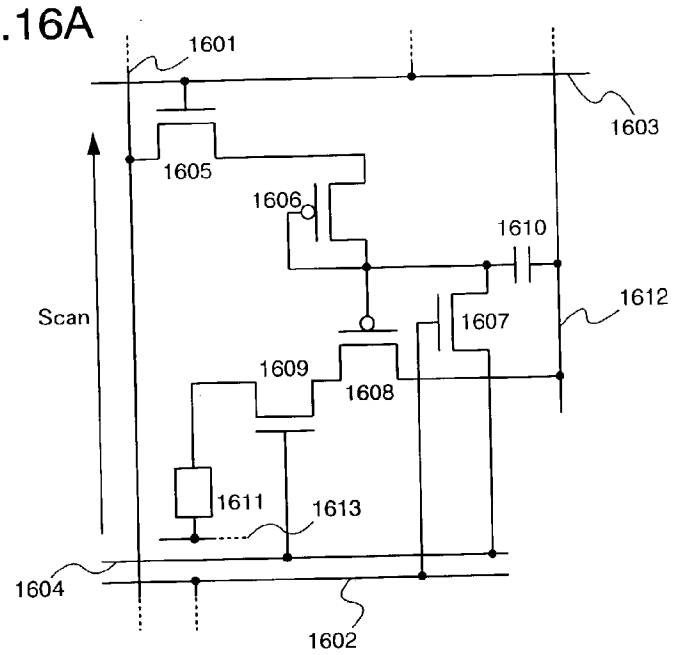

Fig.16B

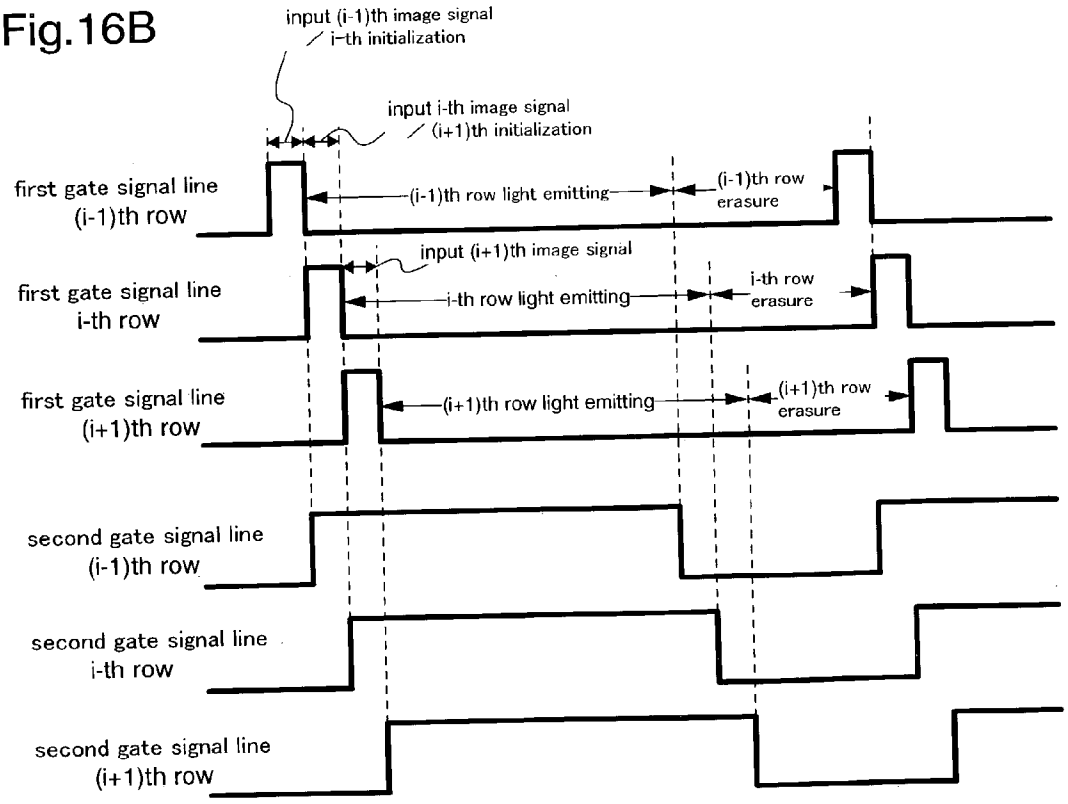

Fig.17A

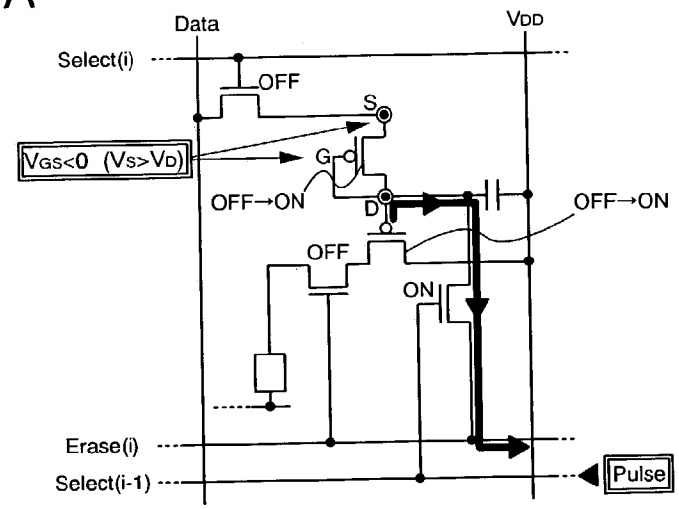

Fig.17B

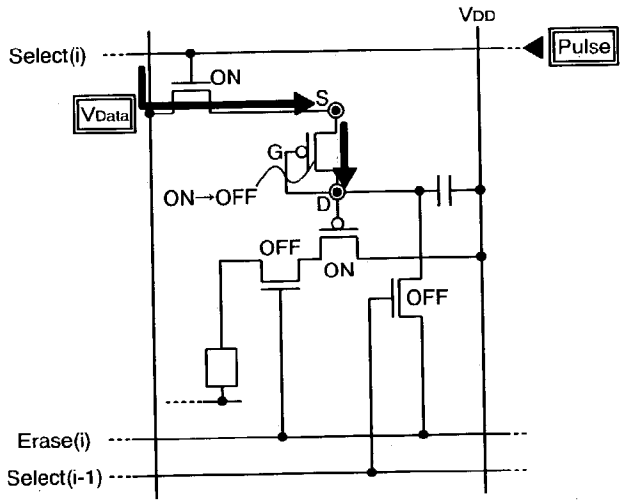

Fig.17C

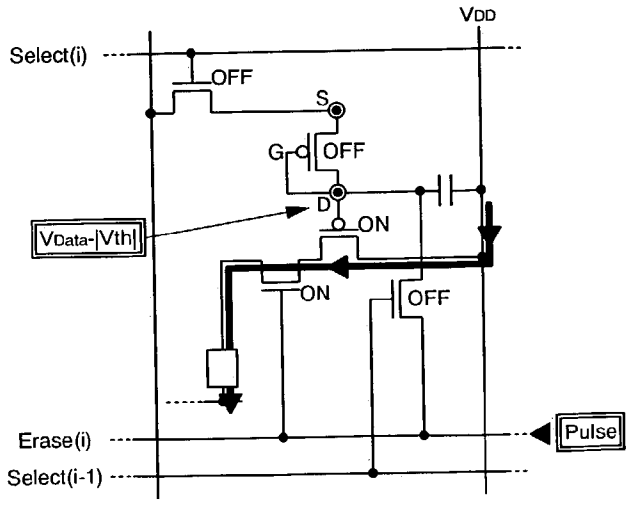

Fig.18A

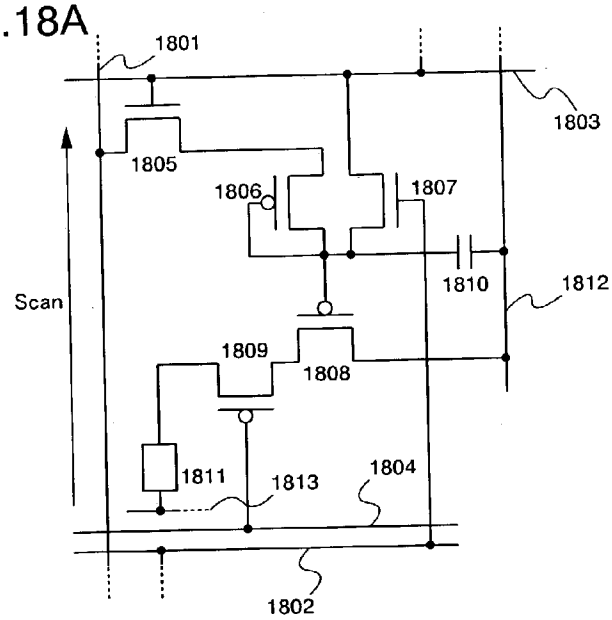

Fig.18B

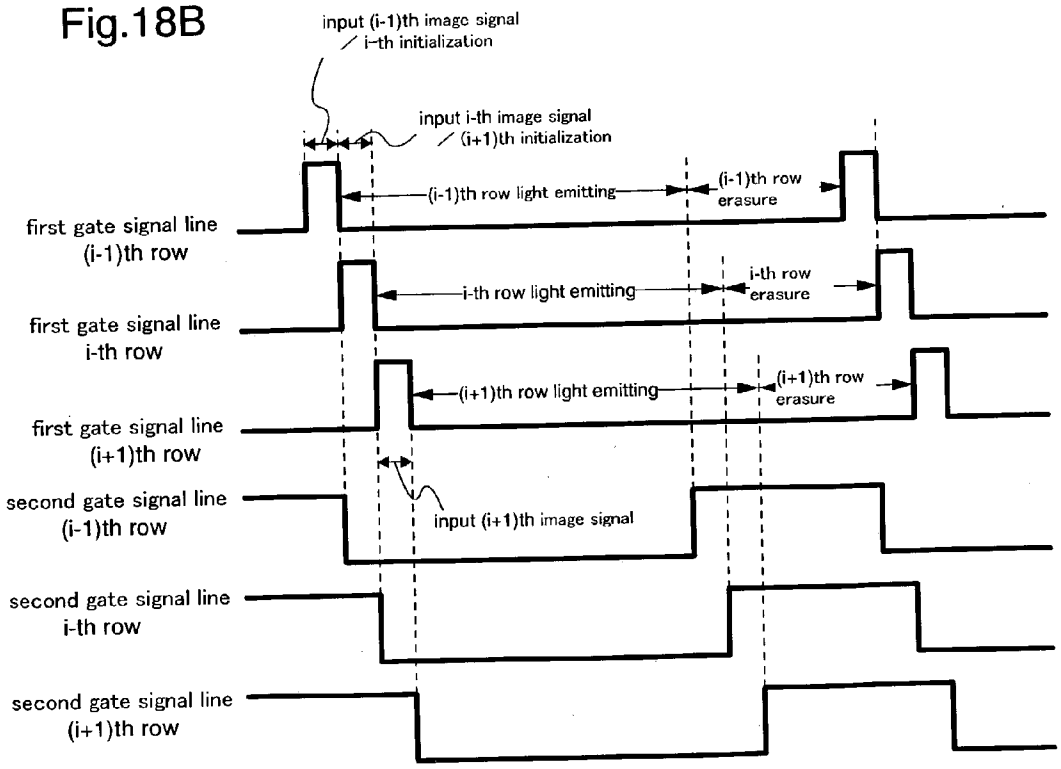

Fig.19A

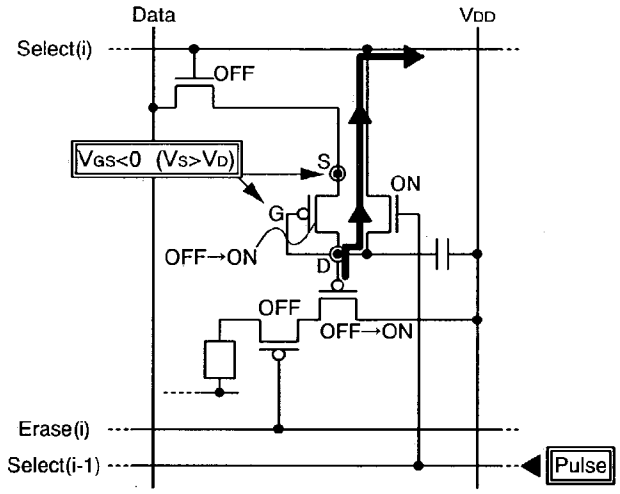

Fig.19B

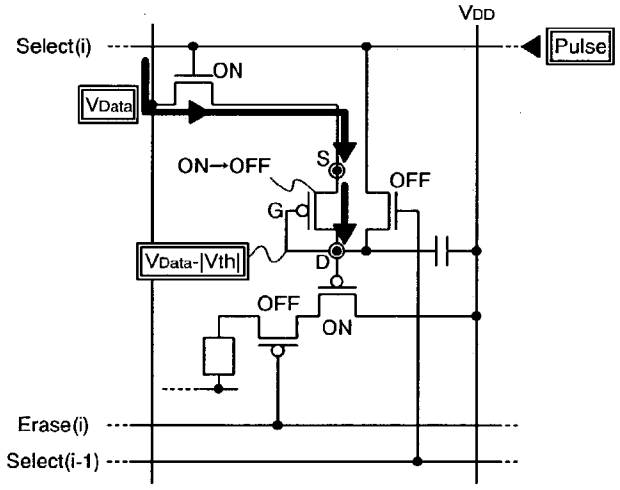

Fig.19C

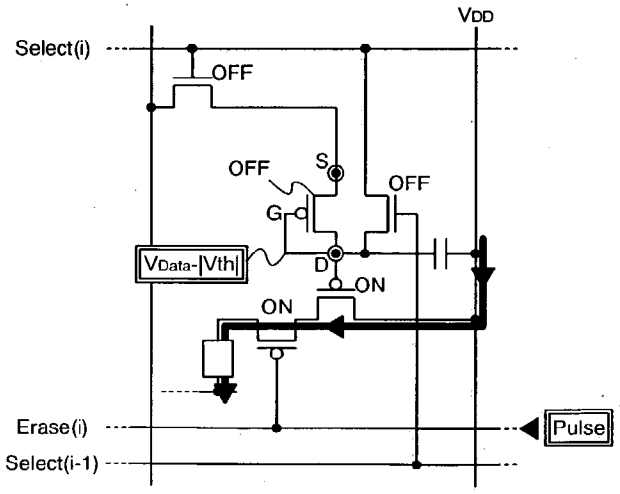

Fig.20

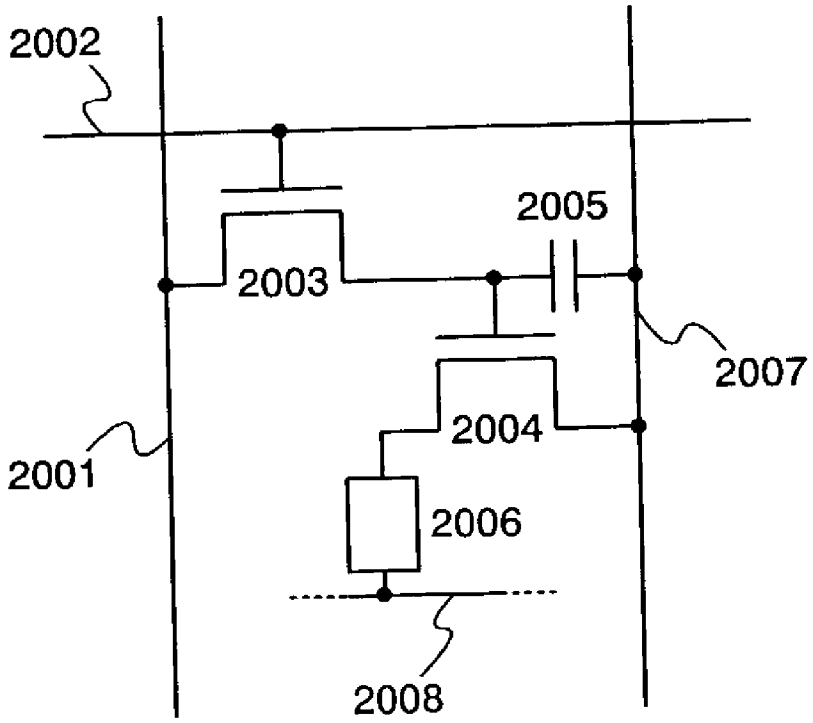

Fig.21A

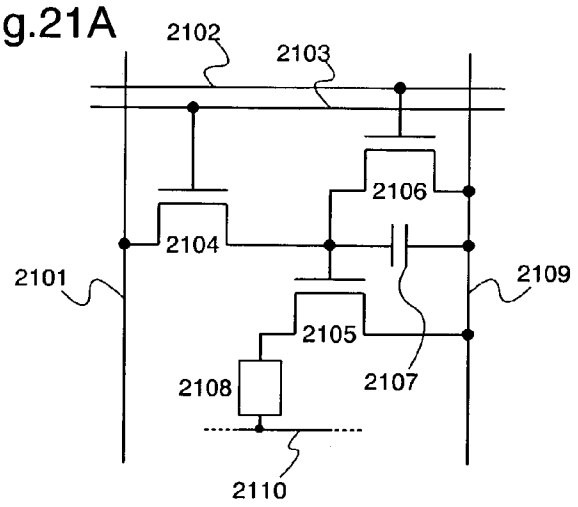

Fig.21B

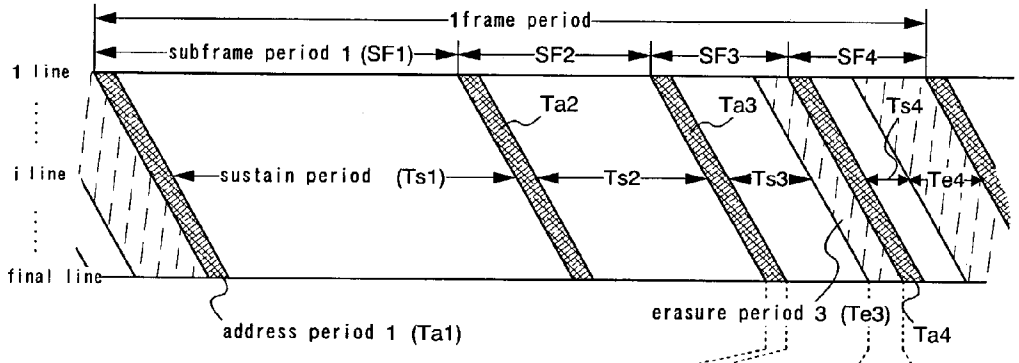

Fig.21C

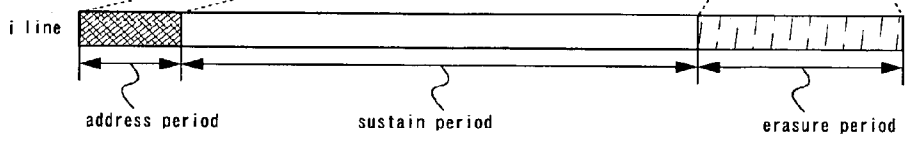

Fig.22A

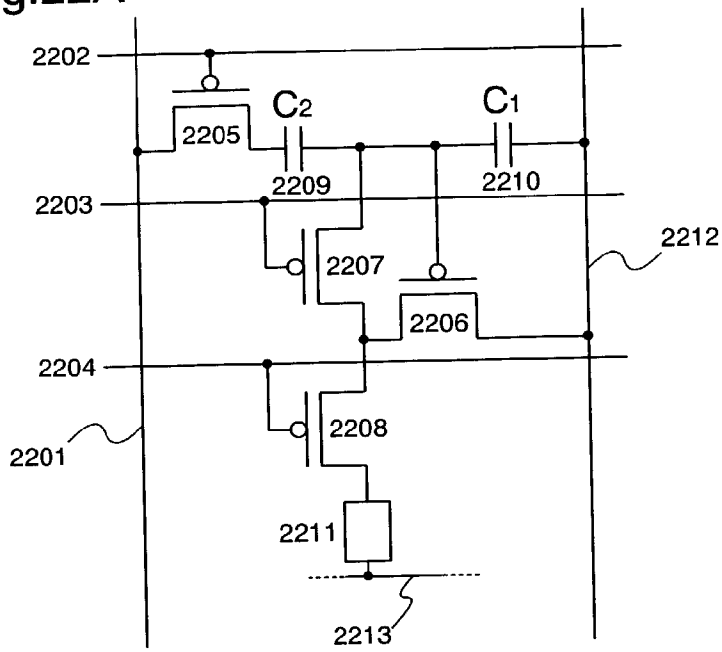

Fig.22B

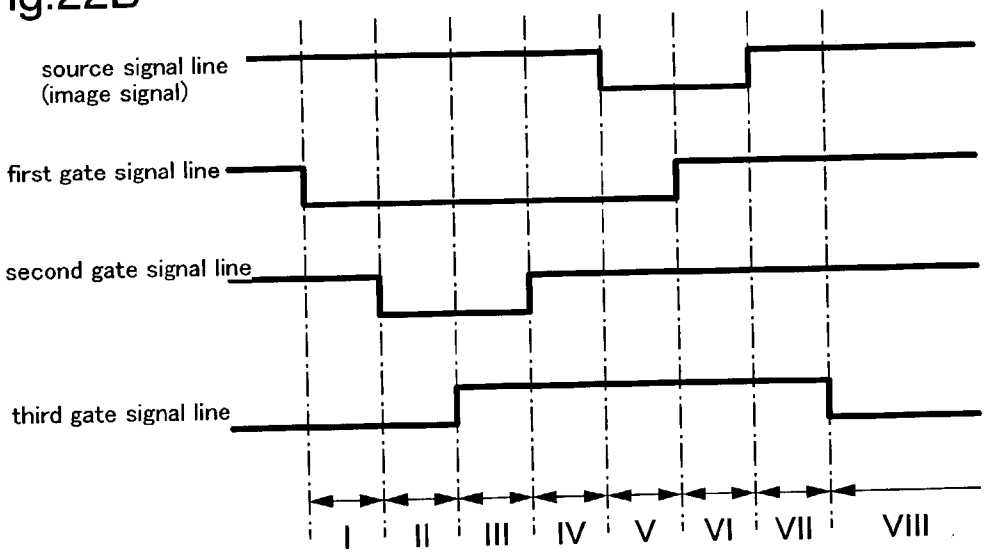

Fig.23A

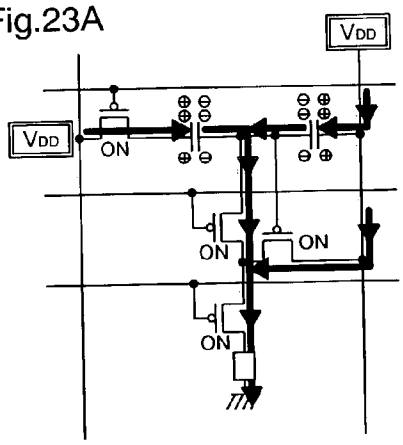

Fig.23B

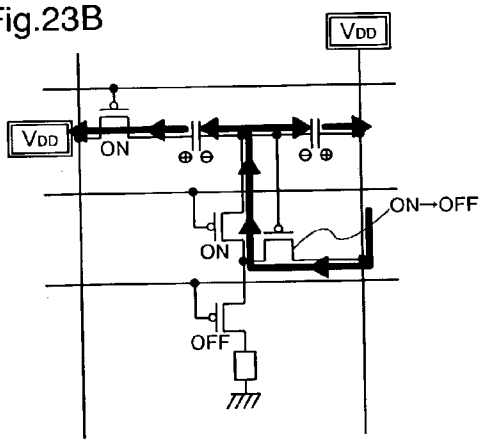

Fig.23C

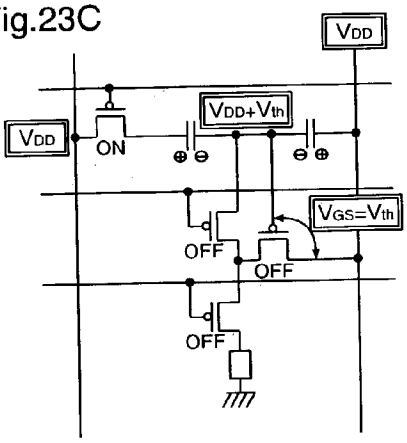

Fig.23D

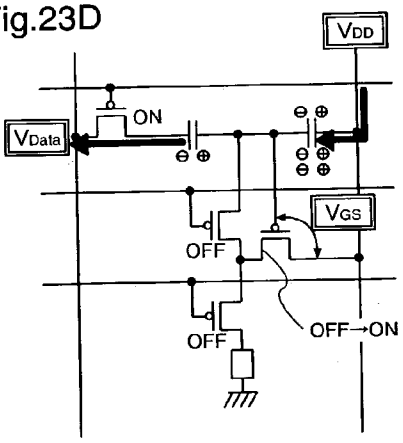

Fig.23E

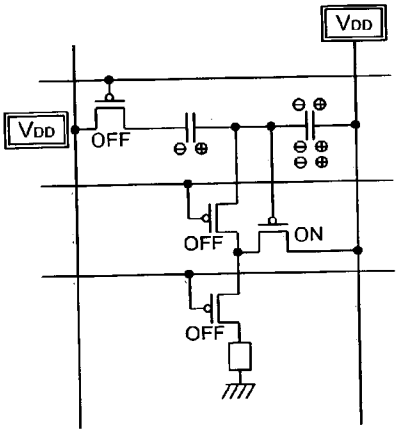

Fig.23F

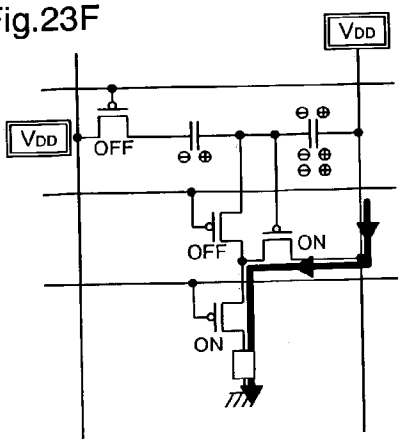

Fig.24A

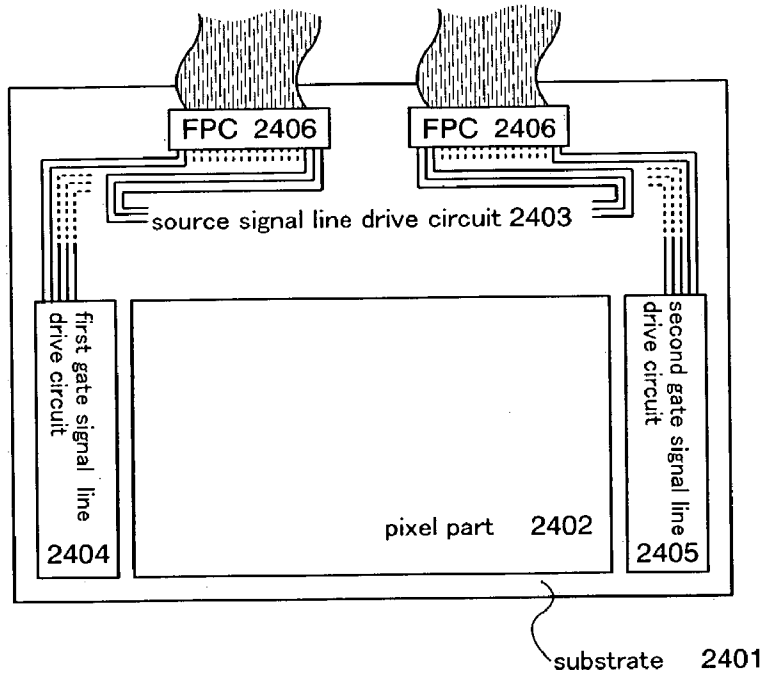

Fig.24B

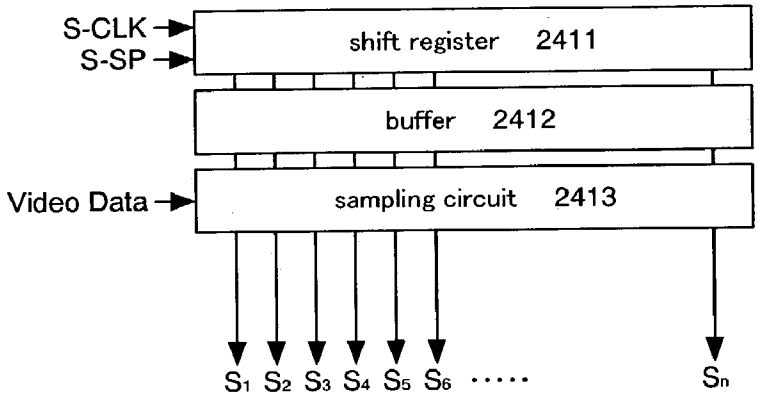

Fig.24C

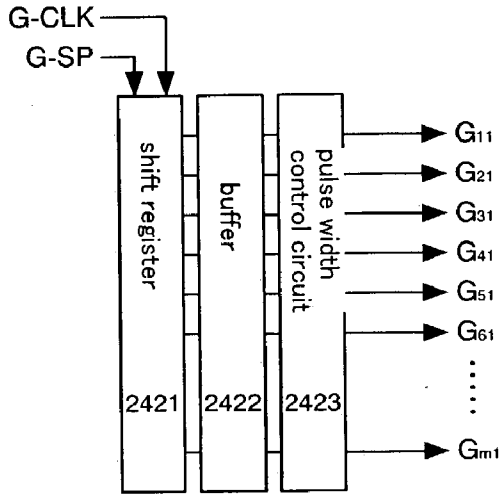

Fig.25A

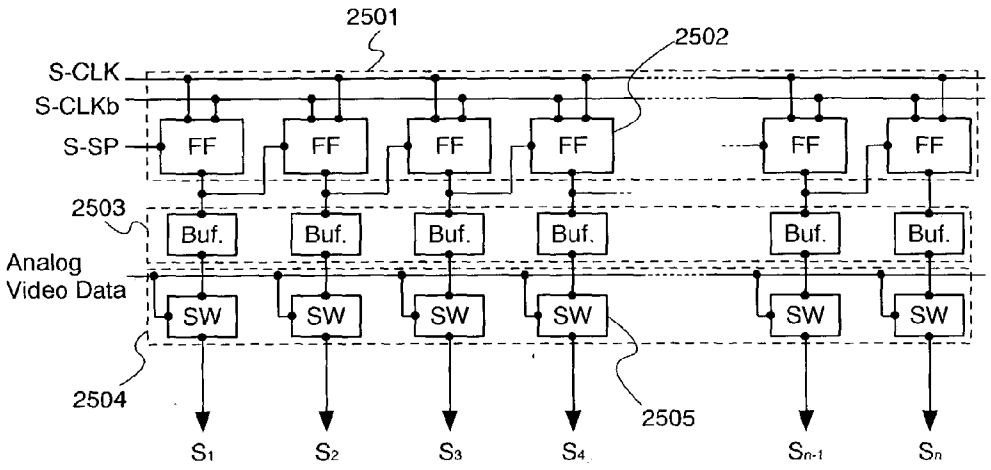

Fig.25B

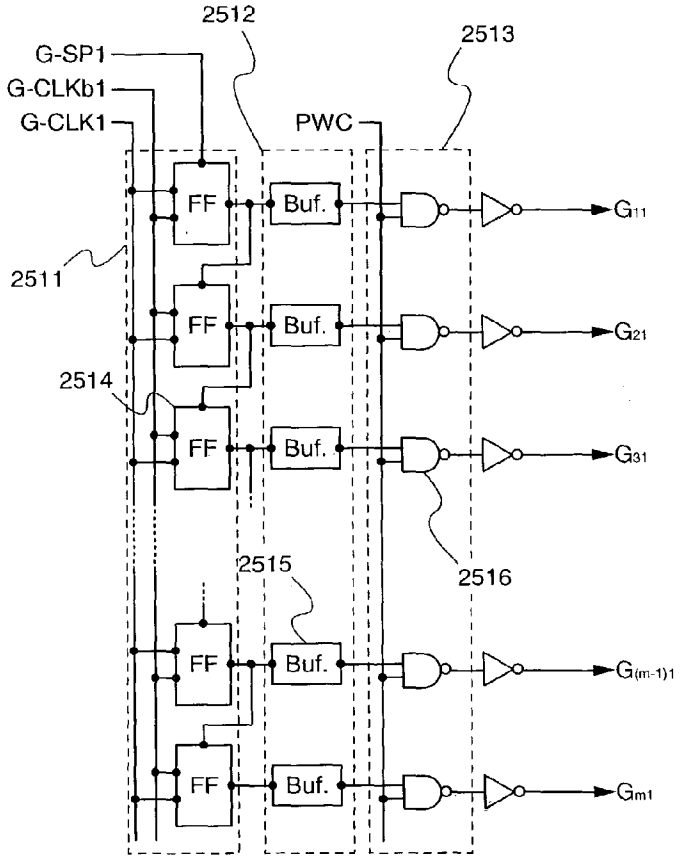

Fig.26A

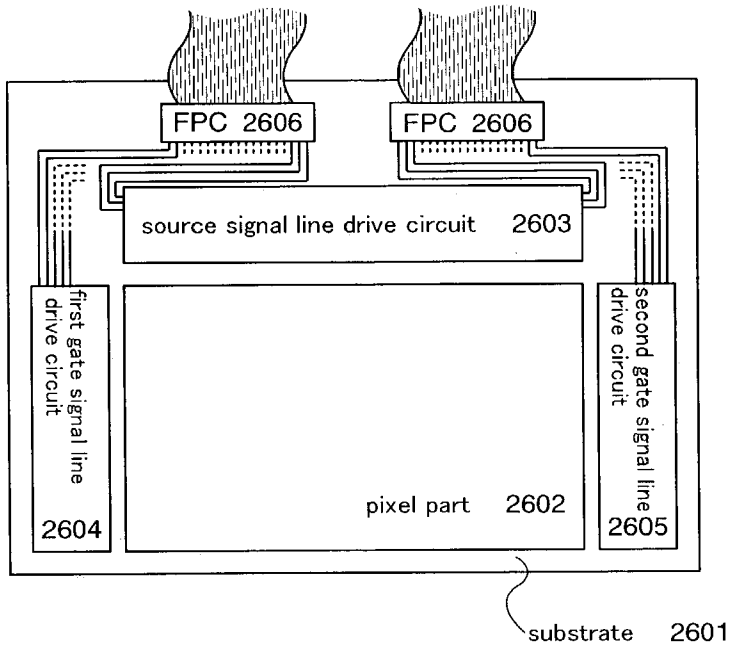

Fig.26B

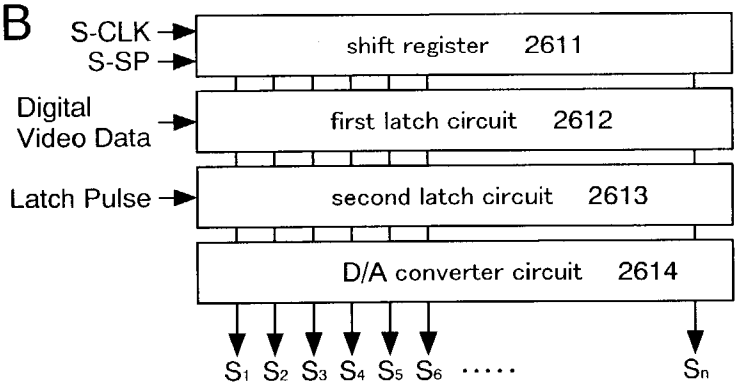

Fig.27A

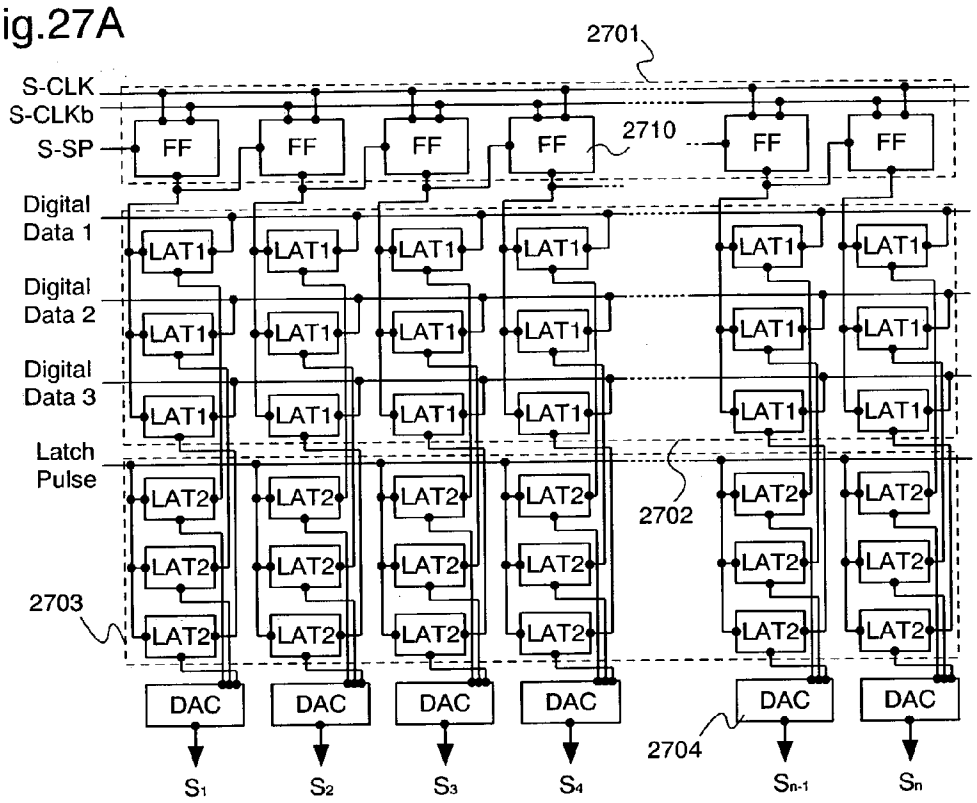

Fig.27B

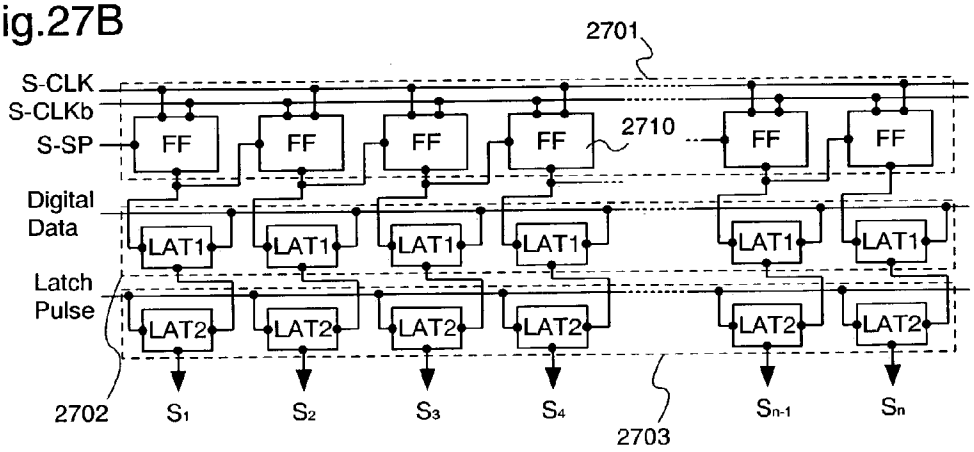

Fig.28A

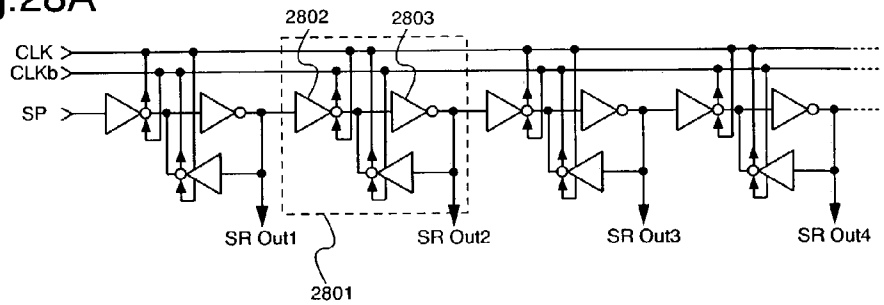

Fig.28B

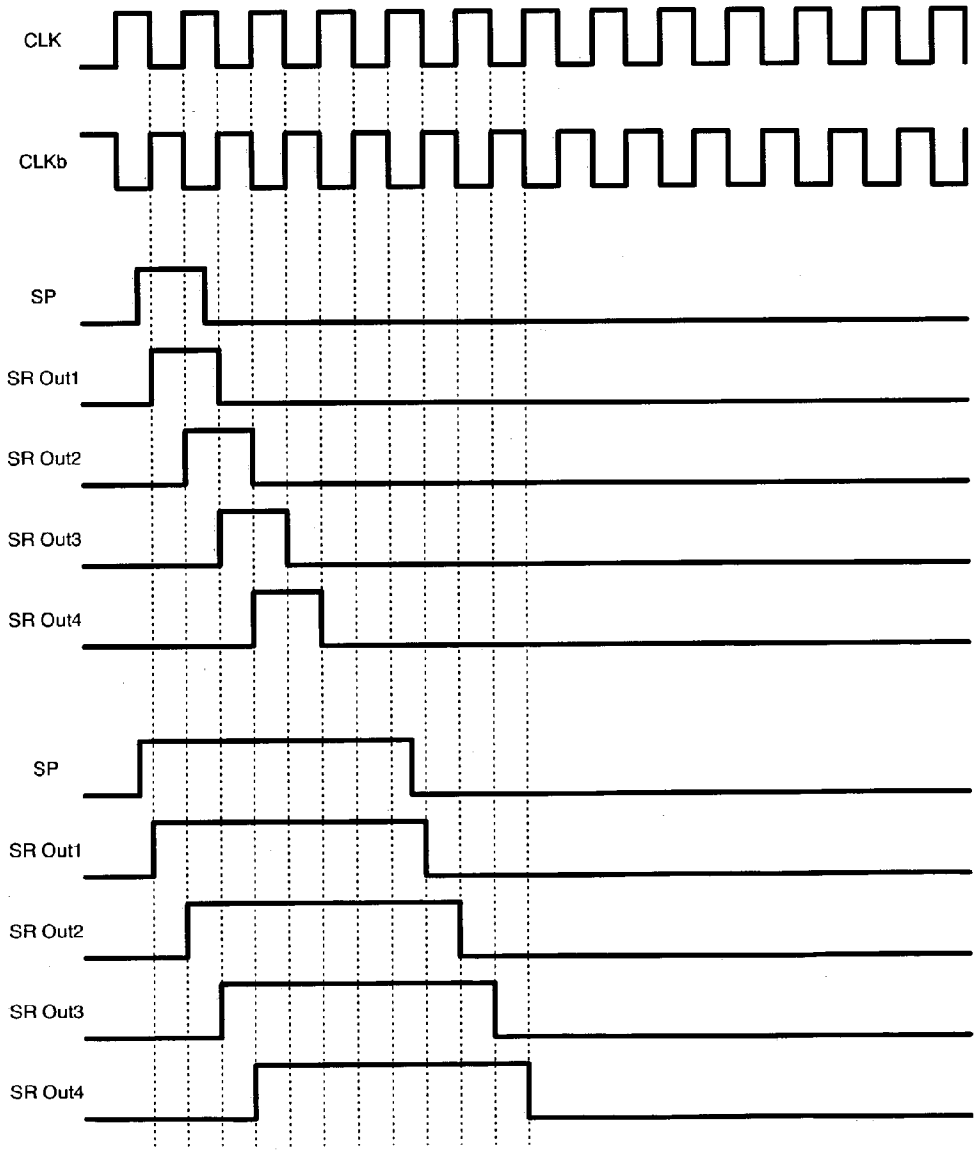

Fig.29A

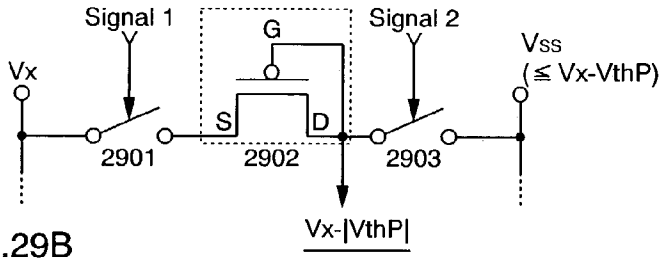

Fig.29B

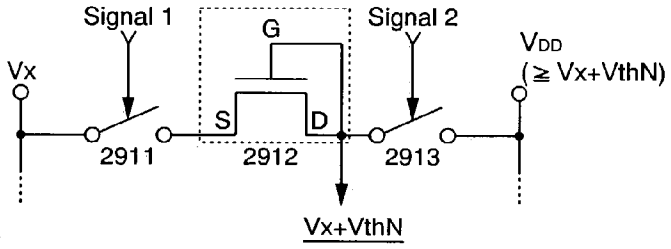

FIg.29C

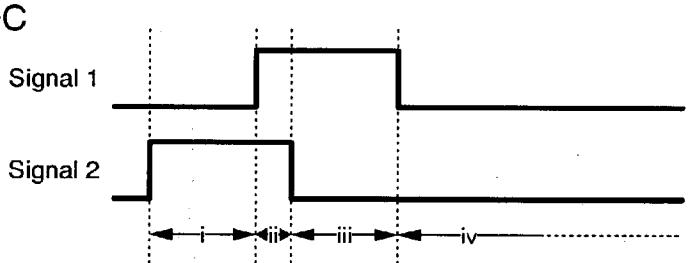

Fig.29D

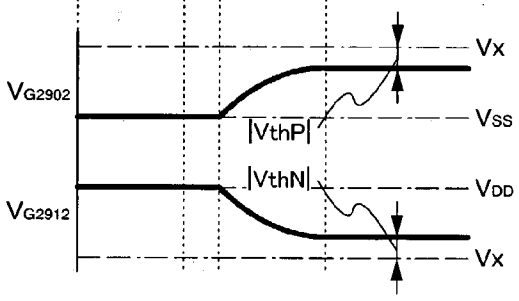

Fig.29E

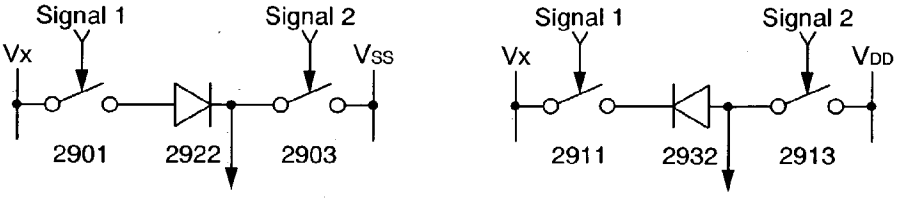

Fig.29F

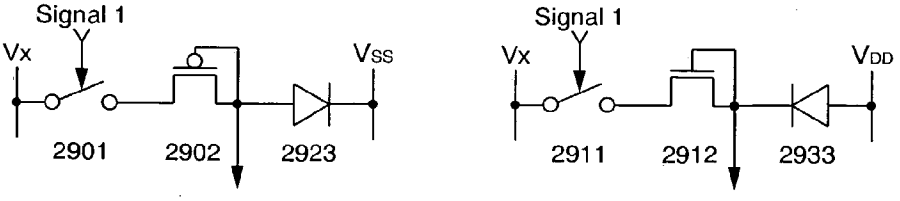

Fig.30A

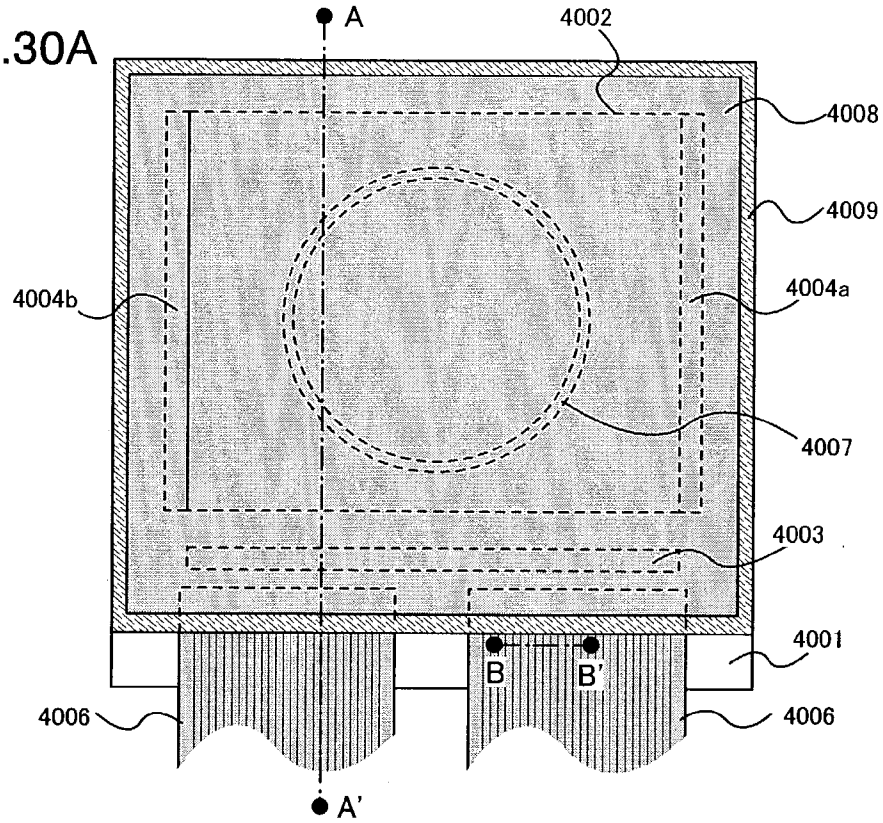

Fig.30B

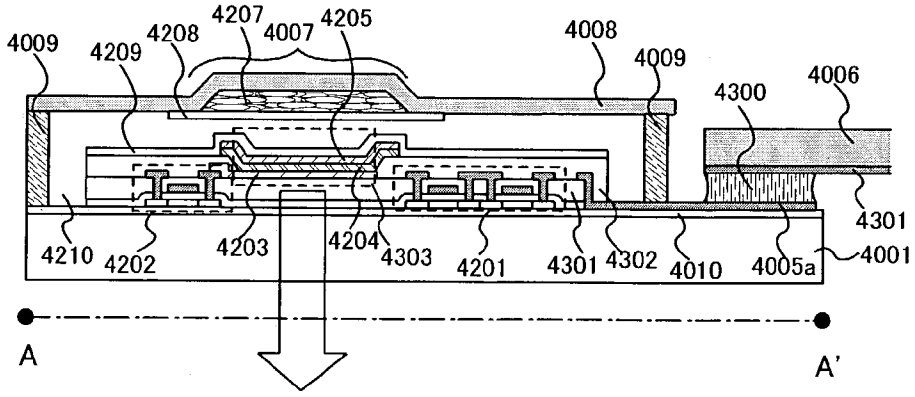

Fig.30C

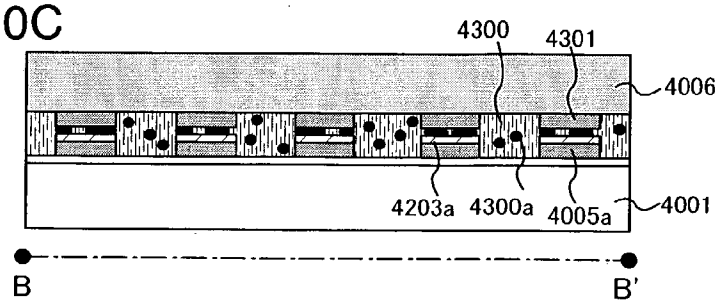

Fig.31A

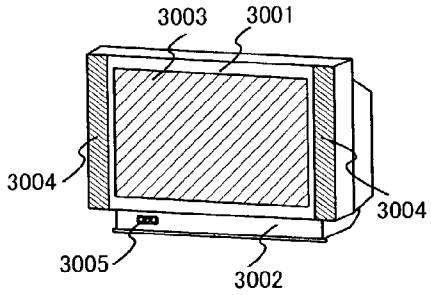

Fig.31B

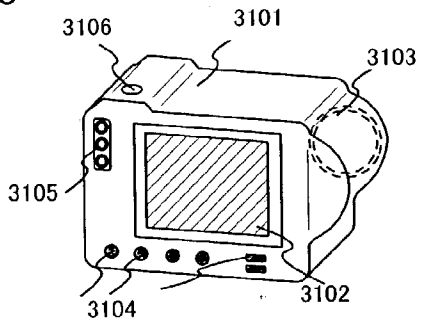

Fig.31C

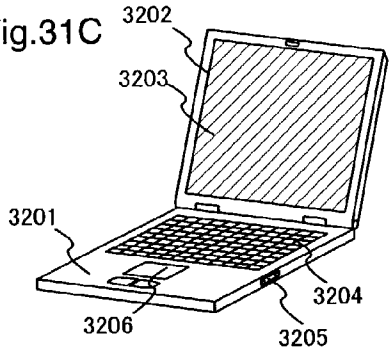

Fig.31D

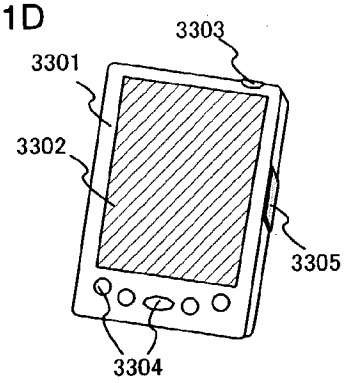

Fig.31E

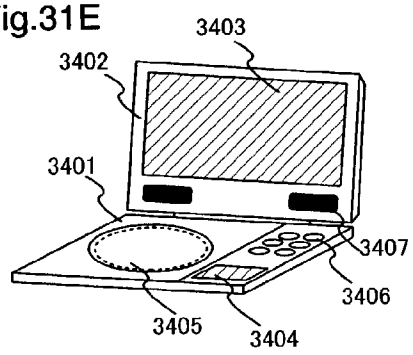

Fig.31F

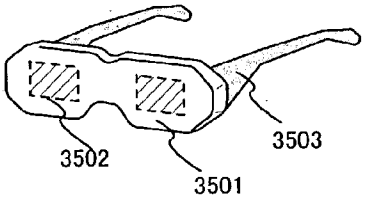

Fig.31G

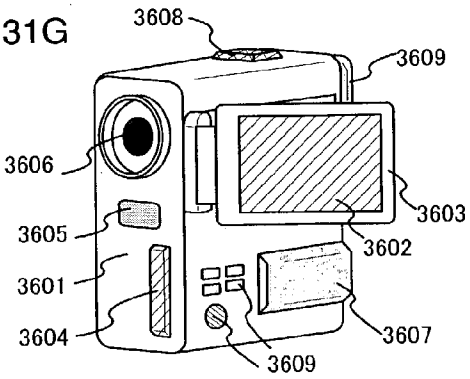

Fig.31H

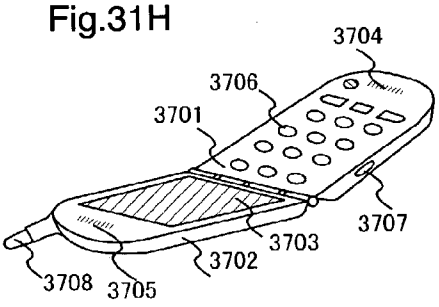

Fig.32A

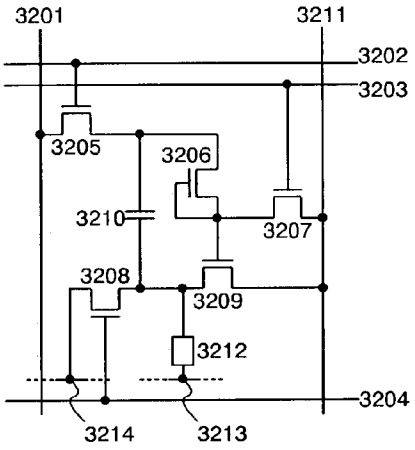

Fig.32B

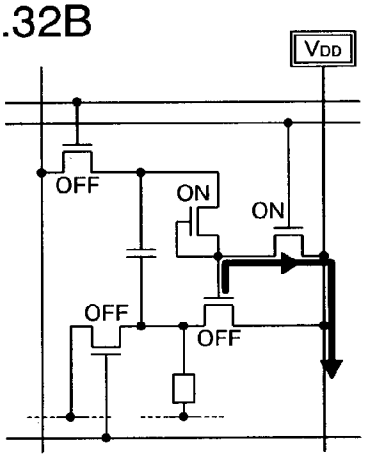

Fig.32C

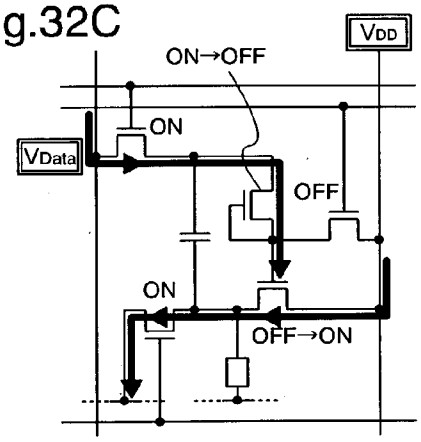

Fig.32D

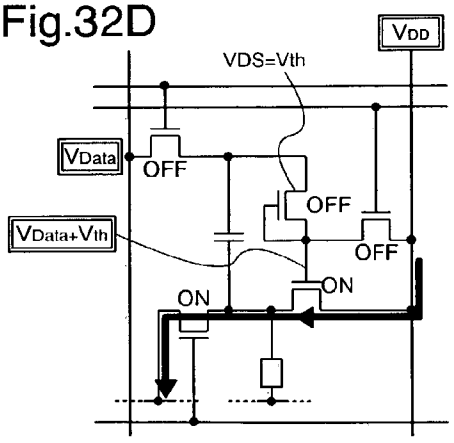

Fig.32E

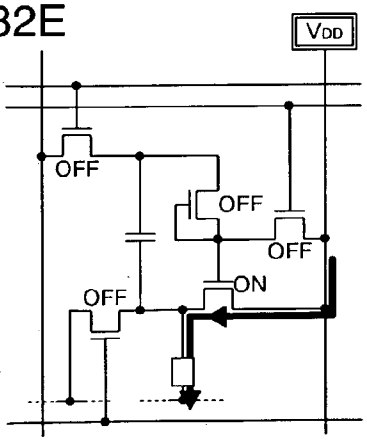

Fig.33A

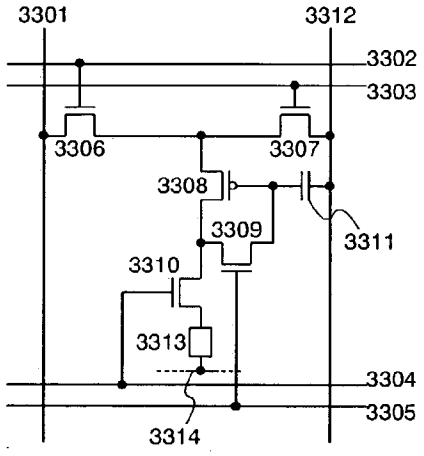

Fig.33B

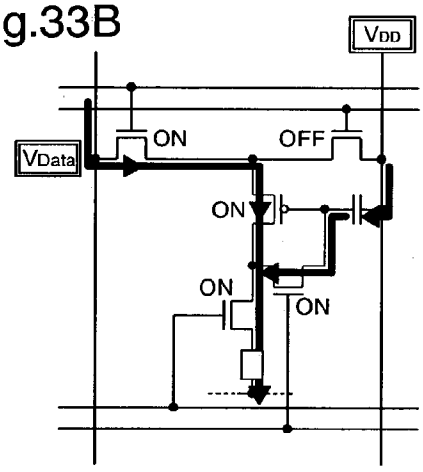

Fig.33C

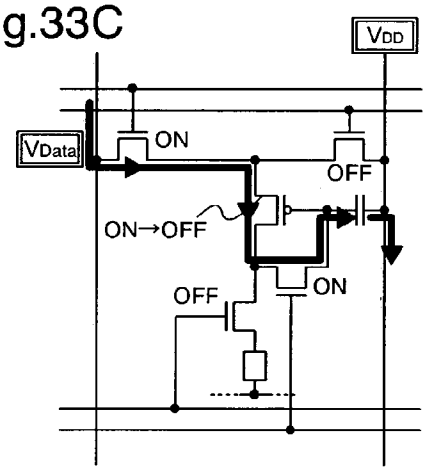

Fig.33D

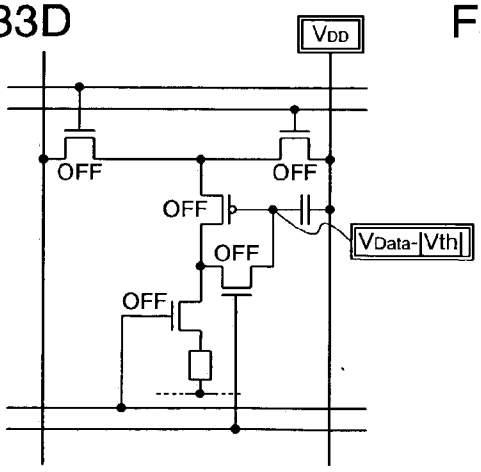

Fig.33E

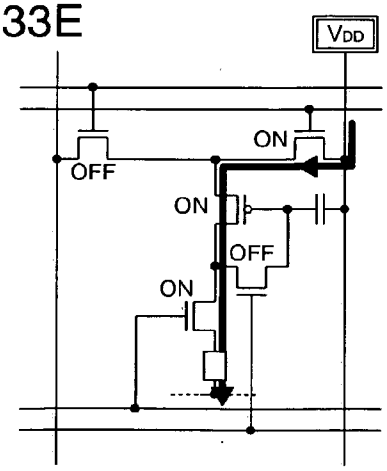

Fig.34A

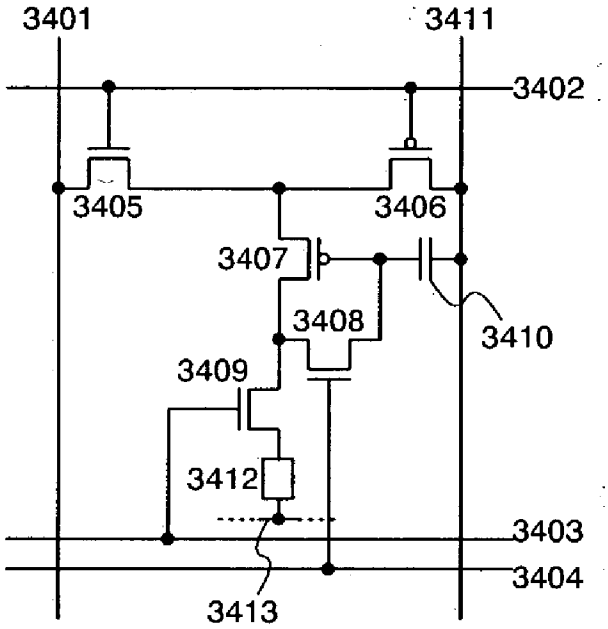

Fig.34B

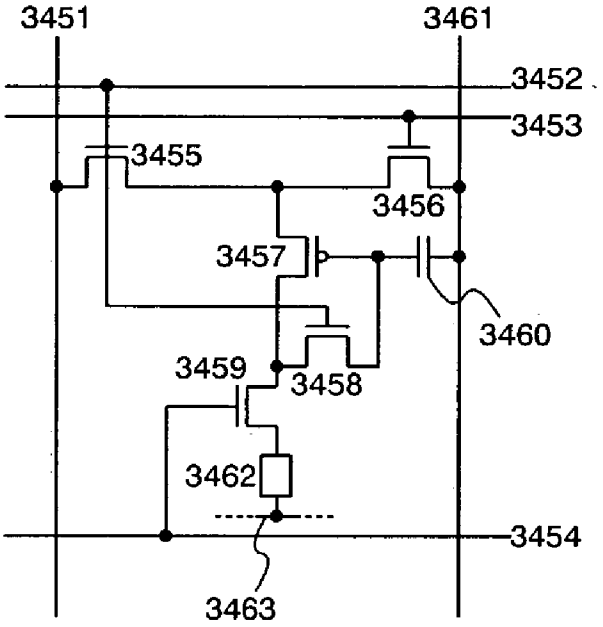

Fig.35A

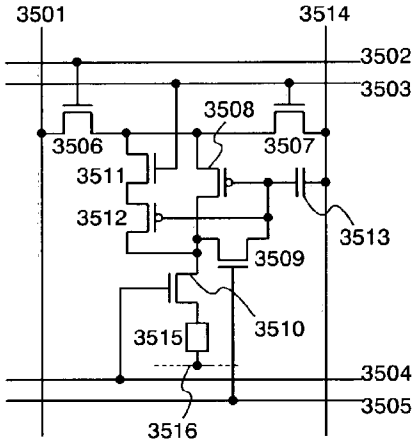

Fig.35B

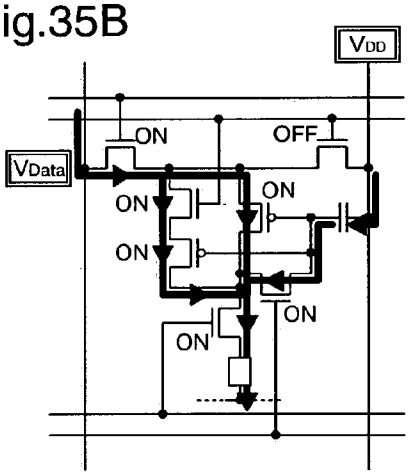

Fig.35C

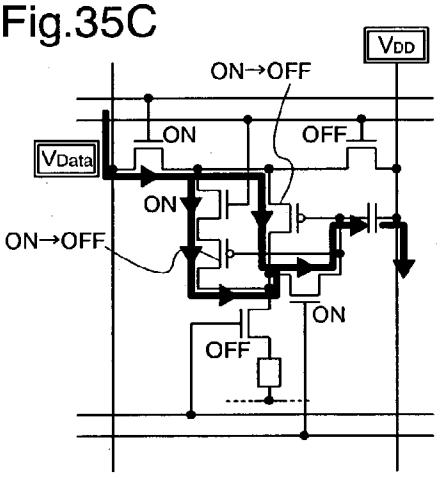

Fig.35D

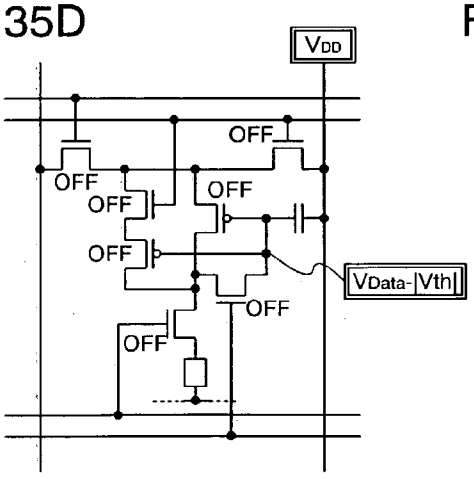

Fig.35E

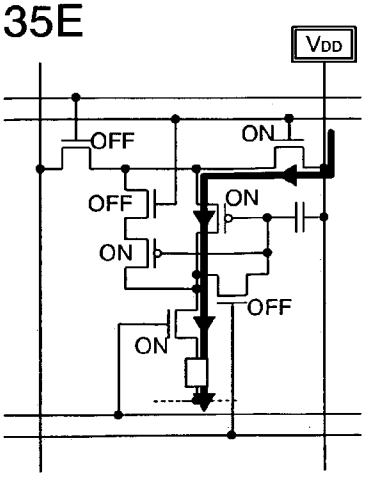

Fig.36A

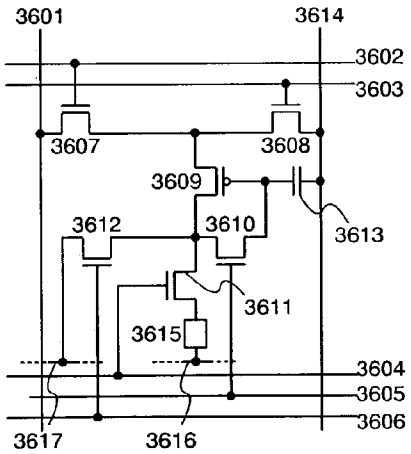

Fig.36B

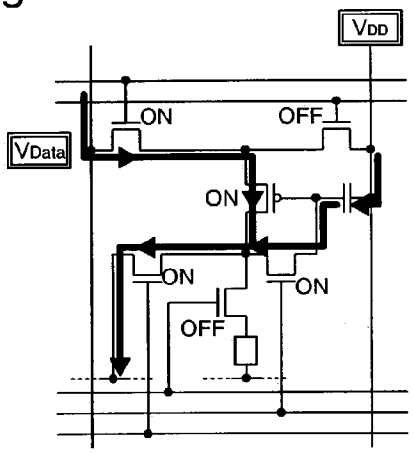

Fig.36C

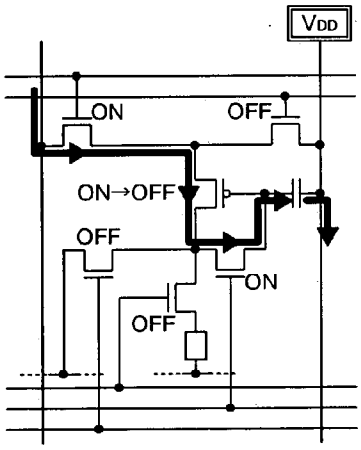

Fig.36D

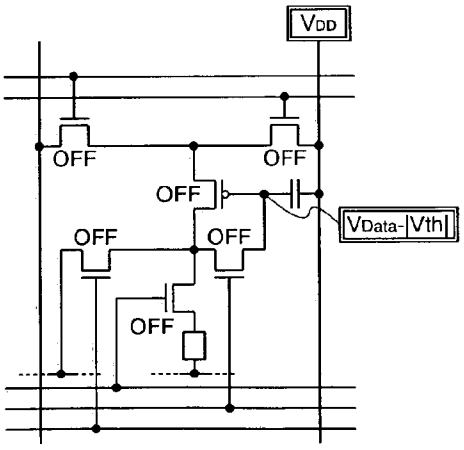

Fig.36E

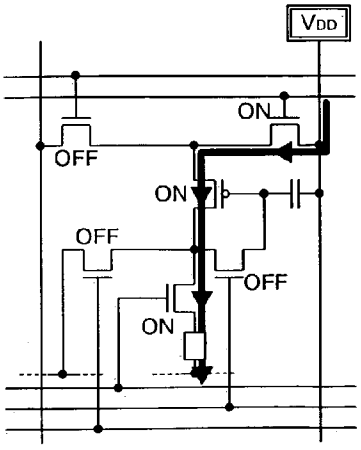

Fig.37A

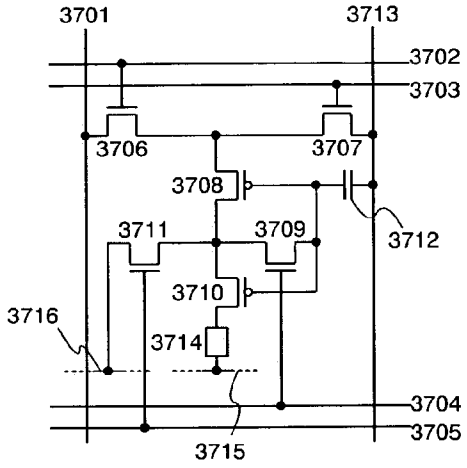

Fig.37B

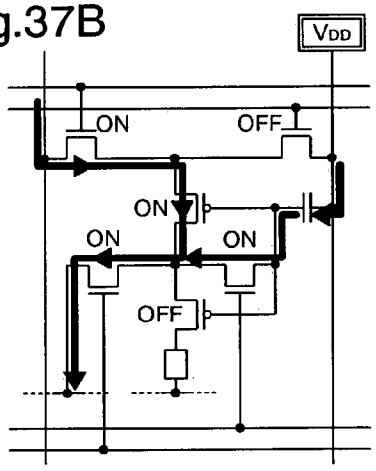

Fig.37C

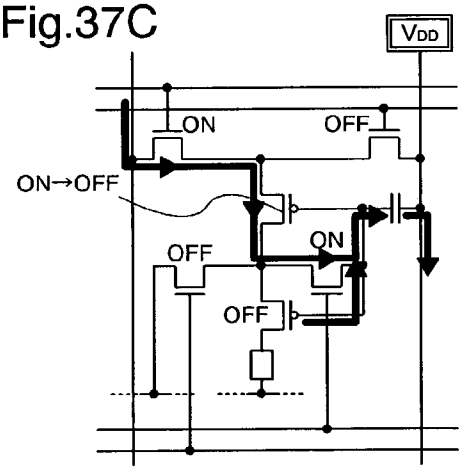

Fig.37D

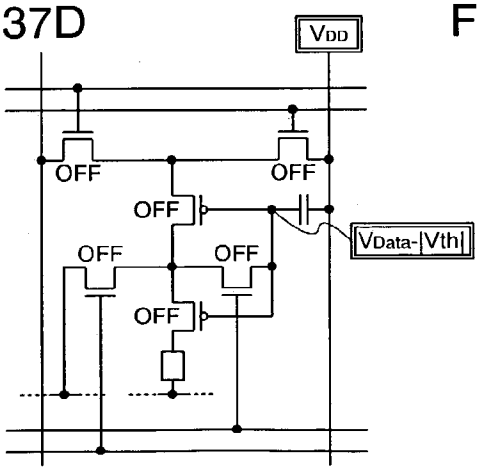

Fig.37E

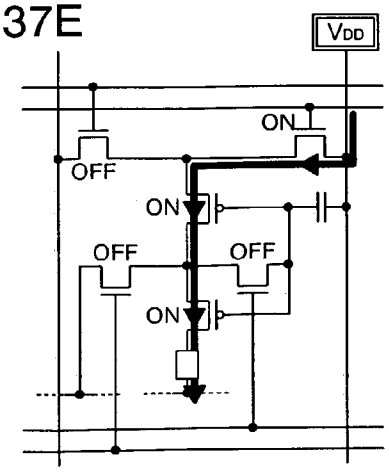

Fig.38A

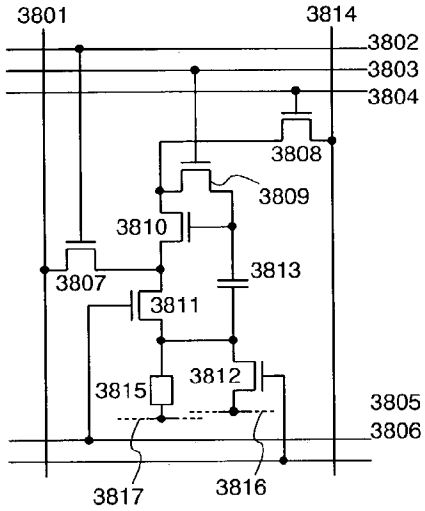

Fig.38B

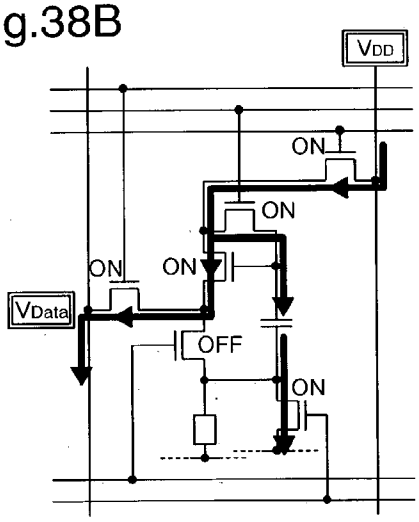

Fig.38C

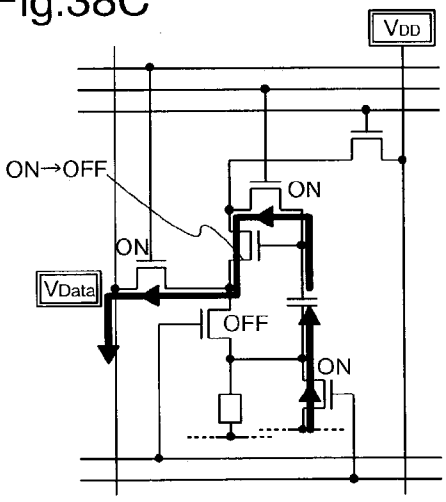

Fig.38D

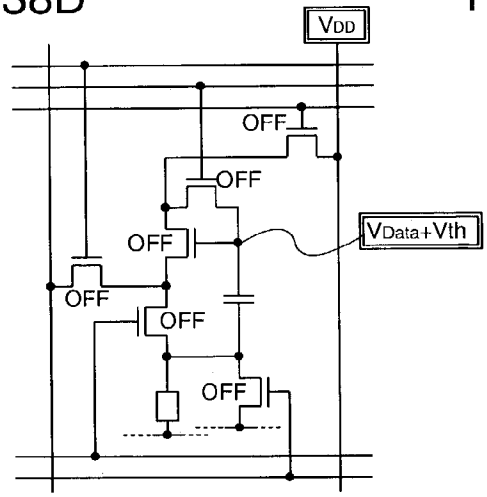

Fig.38E

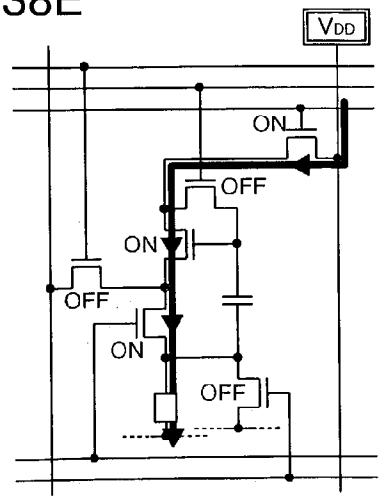

Fig.39A

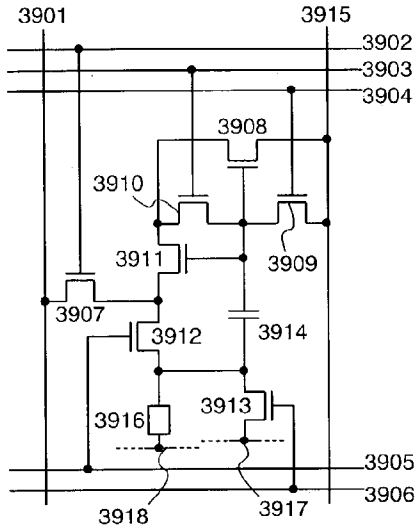

Fig.39B

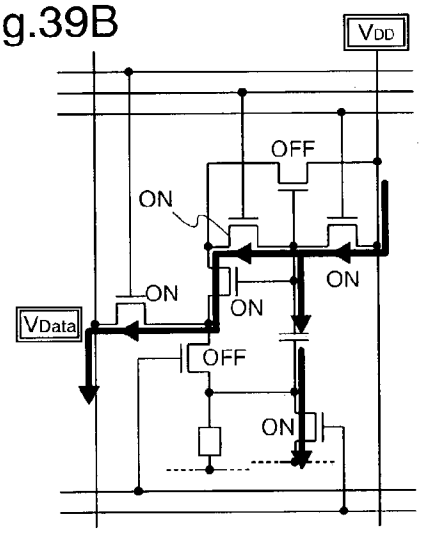

Fig.39C

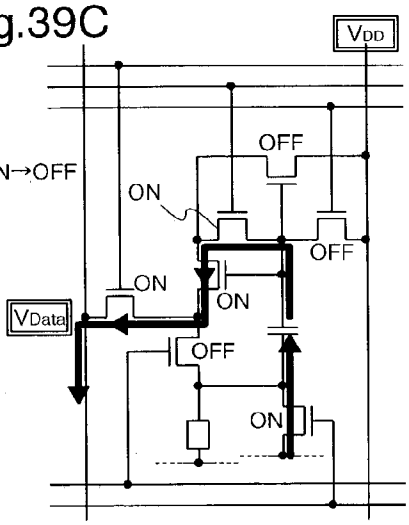

Fig.39D

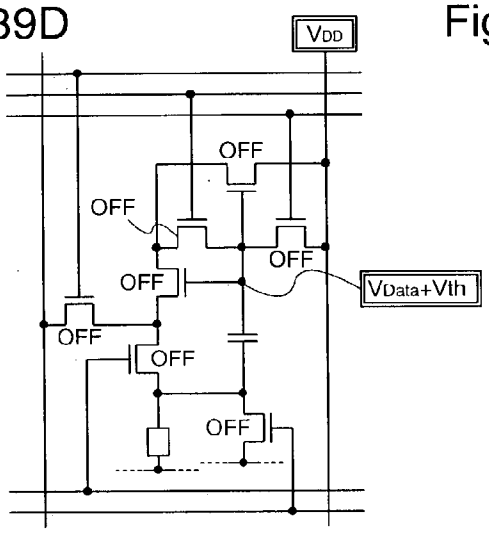

Fig.39E

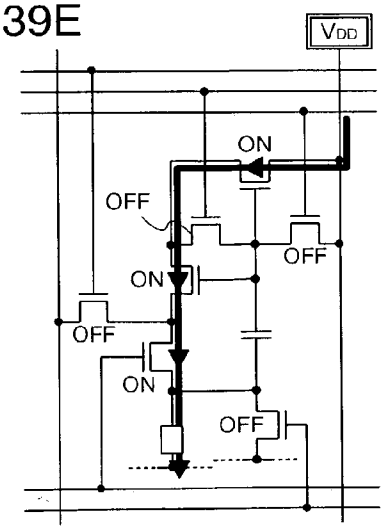

Fig.40A

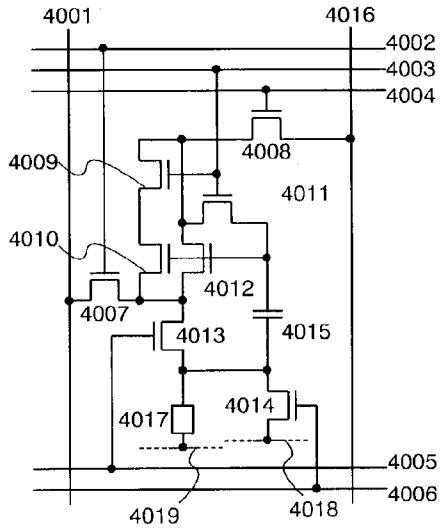

Fig.40B

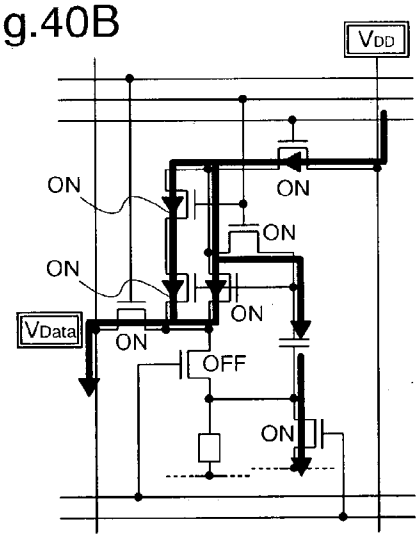

Fig.40C

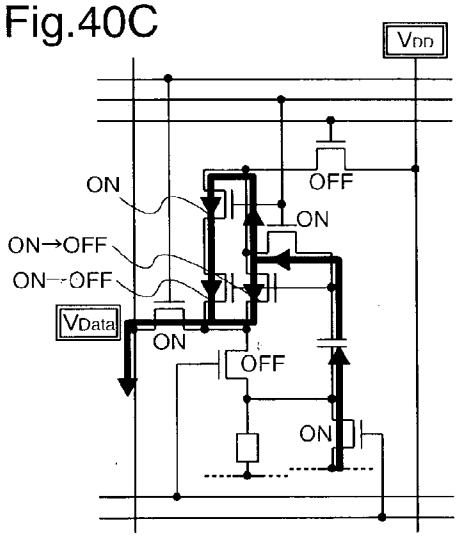

Fig.40D

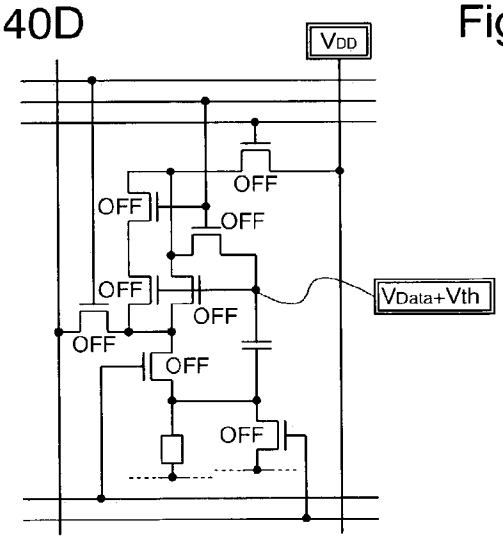

Fig.40E

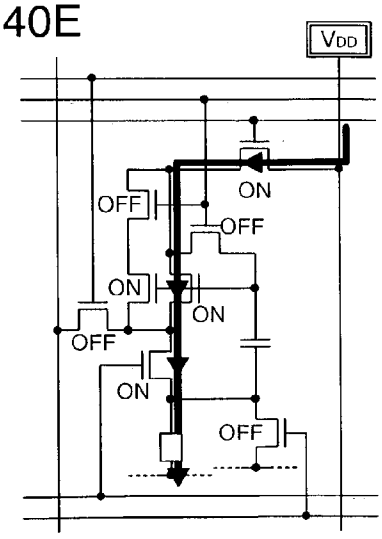

Fig.41A

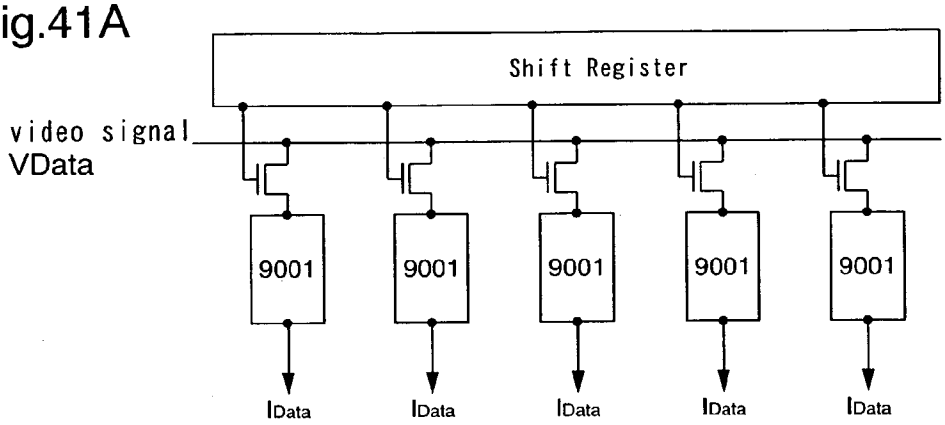

Fig.41B

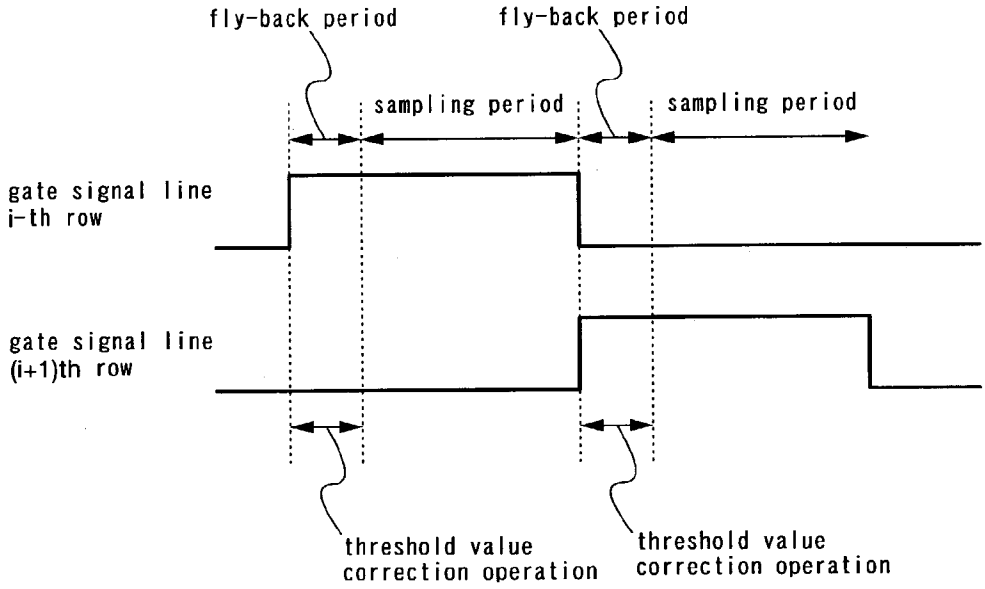

Fig.42A

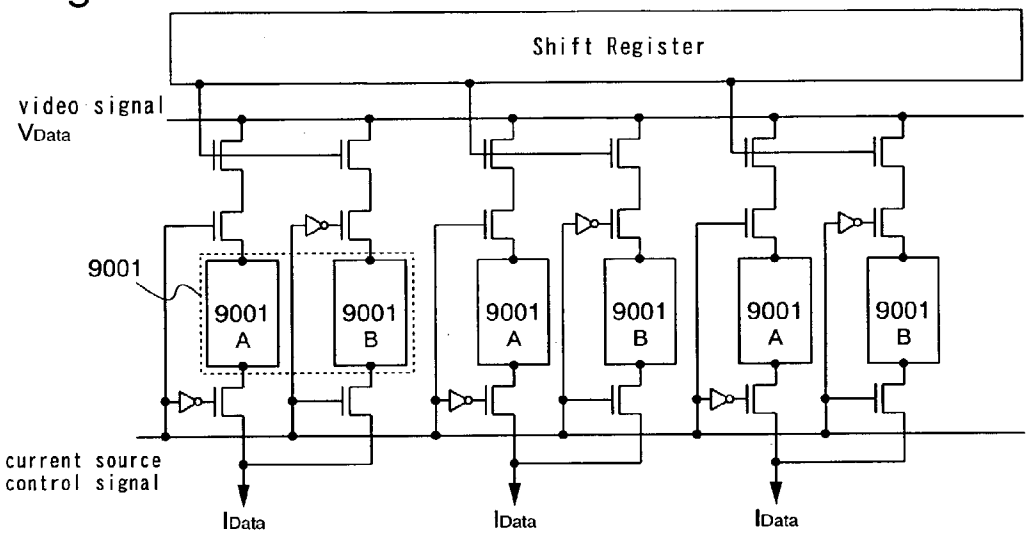

Fig.42B

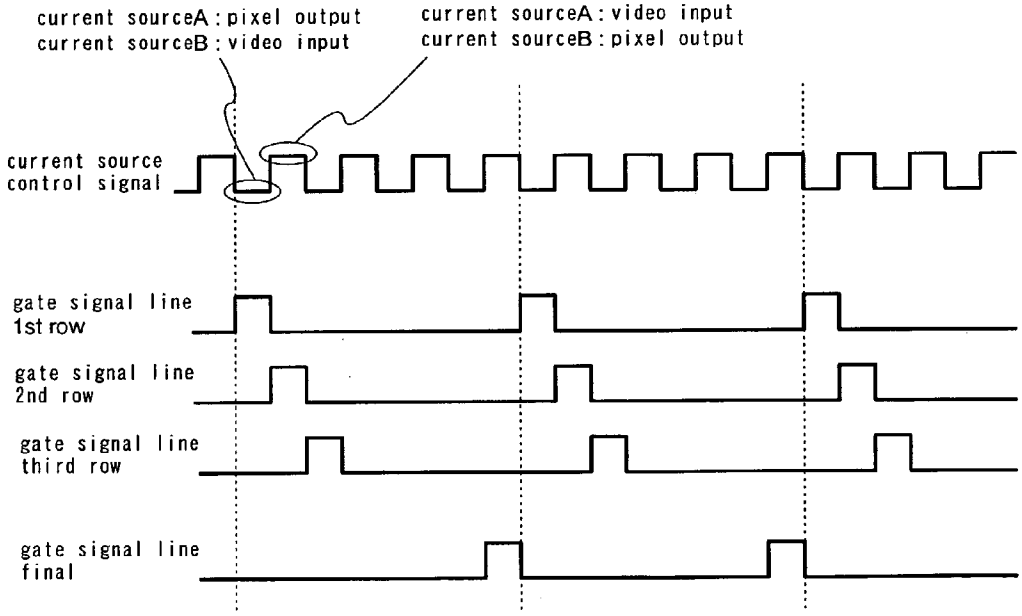

Fig.43A

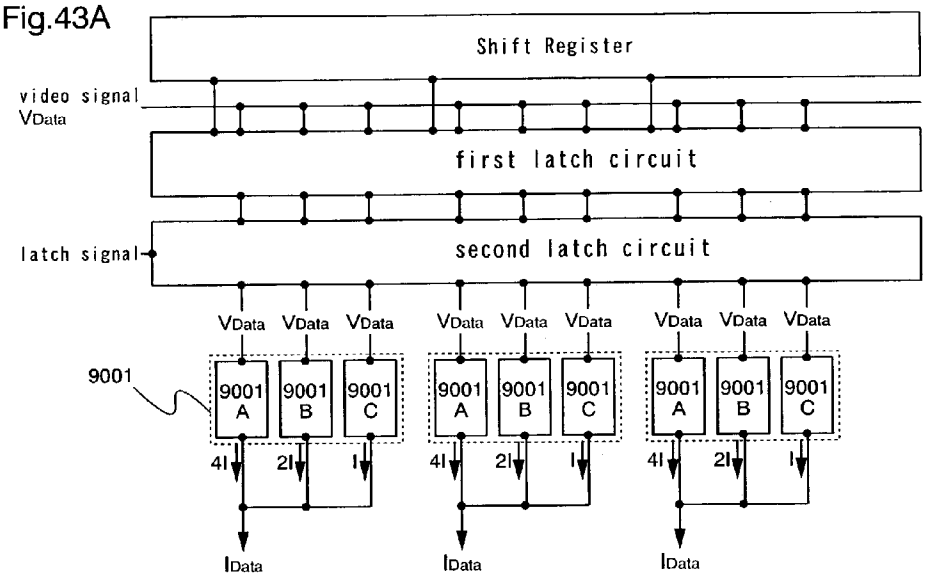

Fig.43B

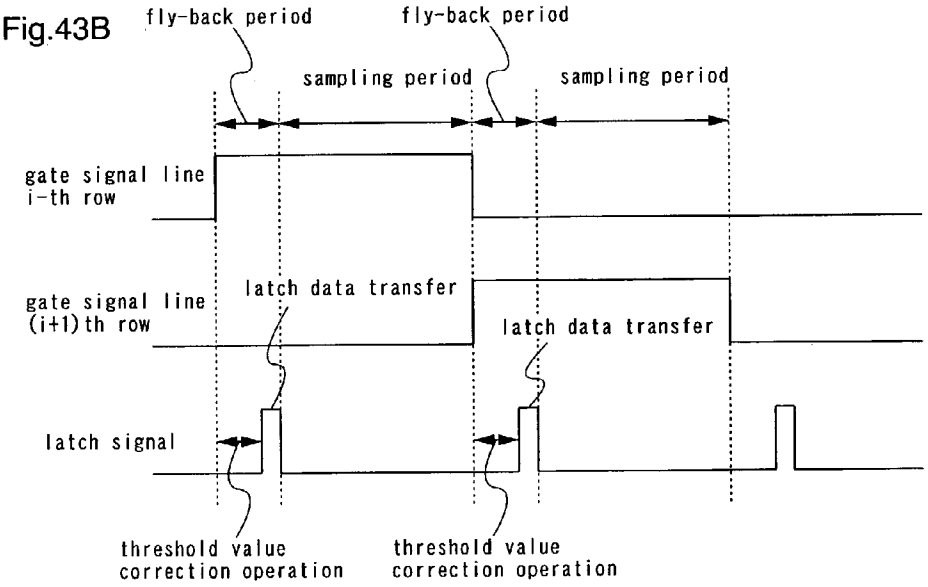

Fig.44A

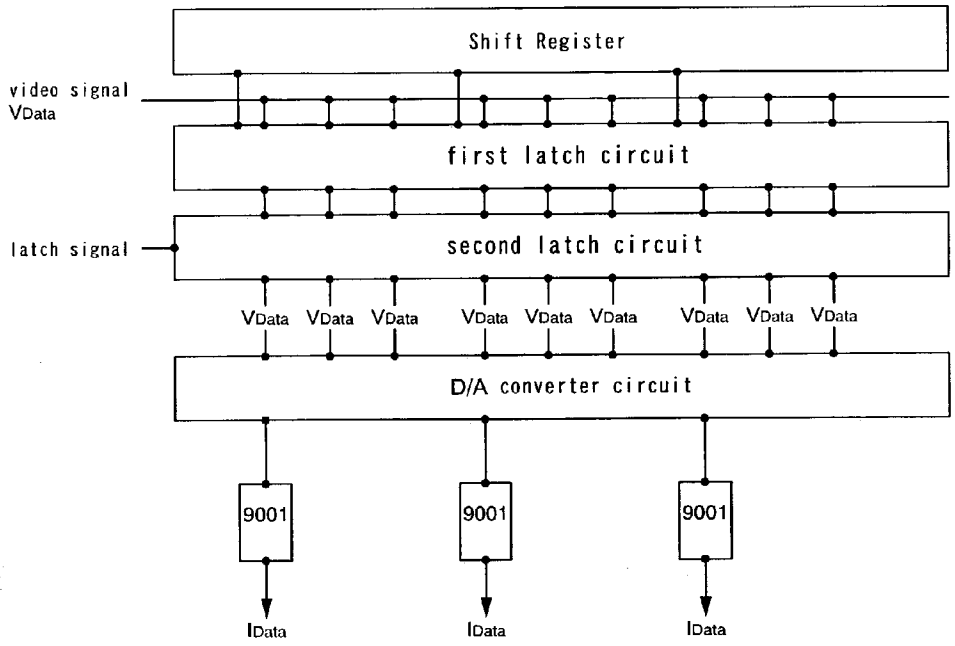

Fig.44B

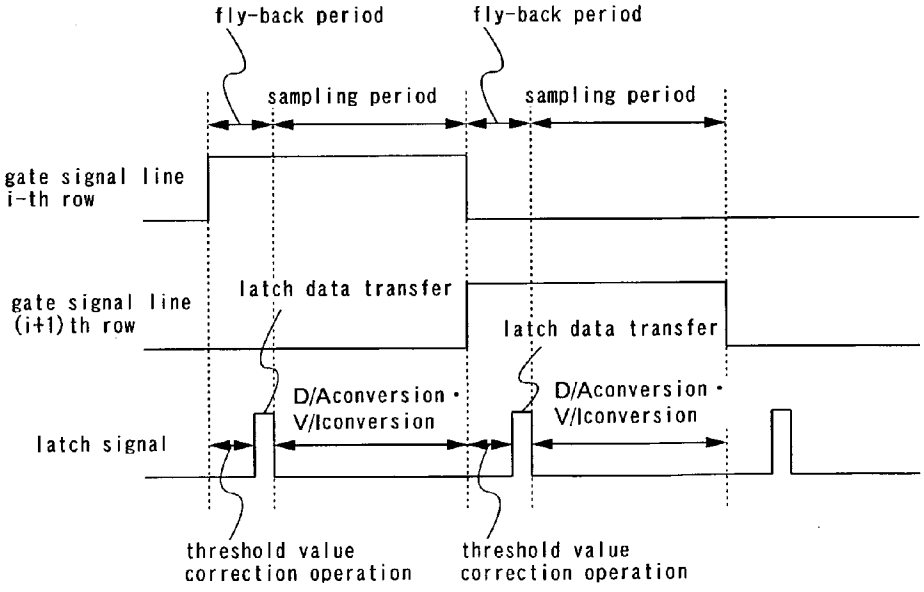

SEMICONDUCTOR DEVICE AND DRIVING METHOD THEREOF

TECHNICAL FIELD

[0001] The present invention relates to the configuration of a semiconductor device having a transistor. The invention also relates to the configuration of an active matrix light emitting device including a semiconductor device having a thin film transistor (hereafter, referred to as TFT) fabricated on an insulator such as glass and plastics. In addition, the invention relates to an electronic apparatus using such a light emitting device.

BACKGROUND

[0002] In recent years, the development of display devices using light emitting devices including electroluminescent (EL) devices has been conducted actively. The light emitting device has high visibility because it emits light for itself. It does not need a back light that is needed in liquid crystal display devices (LCD), and thus it is suitable for forming items that have a low profile and have nearly no limits to the field of view.

[0003] Here, the EL device is a device having a light emitting layer that can obtain luminescence generated by applying an electric filed. The light emitting layer has light emission (fluorescence) in returning from the singlet excited state to the ground state, and light emission (phosphorescence) in returning from the triplet excited state to the ground state. In the invention, the light emitting device may have any light emission forms above.

[0004] The EL device is configured in which the light emitting layer is sandwiched between a pair of electrodes (an anode and a cathode), forming a laminated structure in general. Typically, a laminated structure of the anode/hole transport layer/emissive layer/electron transport layer/cathode is exemplary. Furthermore, there are the other structures laminated between an anode and a cathode in the order of the hole injection layer/hole transport layer/light emitting layer/electron transport layer, or hole injection layer/hole transport layer/light emitting layer/electron transport layer/electron injection layer. As the EL device structure used for the light emitting device in the invention, any structure described above may be adapted. Moreover, fluorescent pigment may be doped into the light emitting layer.

[0005] In the specification, the entire layers disposed between the anode and the cathode are collectively called the EL layer in the EL element. Accordingly, the hole injection layer, the hole transport layer, the light emitting layer, the electron transport layer, and the electron injection layer are all included in the EL element. The light emitting element formed of the anode, the EL layer, and the cathode is called EL element.

SUMMARY

[0006] According to the present invention, there is provided a semiconductor device comprising:

[0007] a switching device; and

[0008] a rectifying device,

[0009] characterized in that:

[0010] a first signal V1 is input to a first electrode of the rectifying device;

[0011] a second electrode of the rectifying device is electrically connected to a first electrode of the switching device;

[0012] a certain electric potential V is imparted to a second electrode of the switching device; and

[0013] an offset signal V2 equal to the signal V1 offset by a threshold value Vth is obtained from the second electrode of the rectifying device.

[0014] According to the present invention, there is provided a semiconductor device comprising:

[0015] first and second switching devices; and

[0016] a rectifying device,

[0017] characterized in that:

[0018] a first signal V1 is input to a first electrode of the first switching device;

[0019] a second electrode of the first switching device is electrically connected to a first electrode of the rectifying device;

[0020] a second electrode of the rectifying device is electrically connected to a first electrode of the second switching device;

[0021] a certain electric potential V is imparted to a second electrode of the second switching device; and

[0022] an offset signal V2 equal to the signal V1 offset by a threshold value Vth is obtained from the second electrode of the rectifying device.

[0023] According to the present invention, there is provided a semiconductor device comprising first and second rectifying devices, characterized in that:

[0024] a first signal V1 is input to a first electrode of the first rectifying device;

[0025] a second electrode of the first rectifying device is electrically connected to a first electrode of the second rectifying device;

[0026] a certain electric potential V is imparted to a second electrode of the second rectifying device; and

[0027] an offset signal V2 equal to the signal V1 offset by a threshold value Vth is obtained from the second electrode of the first rectifying device.

[0028] According to the present invention, there is provided a semiconductor characterized in that:

[0029] the rectifying device uses a transistor having a connection between its gate and its drain;

[0030] $V1+Vth<V$, and $V2=V1+Vth$ are satisfied when the polarity of the transistor is n-channel and its threshold value is Vth; and

[0031] $V1>V+|Vth|$, and $V2=V1-|Vth|$ are satisfied when the polarity of the transistor is p-channel and its threshold value is Vth.

[0032] According to the present invention, there is provided a semiconductor device characterized in that:

[0033] the rectifying device uses a diode; and

[0034] $V1>V+Vth$, and $V2=V1+Vth$, or $V1<V-|Vth|$, and $V2=V1-|Vth|$ are satisfied when the threshold value of the diode is Vth.

[0035] According to the present invention, there is provided a semiconductor device comprising a pixel including a light emitting device, characterized in that:

[0036] the pixel has:

[0037] a source signal line;

[0038] first and second gate signal lines;

[0039] an electric current supply line;

[0040] first to fourth transistors; and

[0041] the light emitting device;

[0042] a gate electrode of the first transistor is electrically connected to the first gate signal line;

[0043] a first electrode of the first transistor is electrically connected to the source signal line;

[0044] a second electrode of the first transistor is electrically connected to a first electrode of the second transistor;

[0045] a gate electrode of the second transistor is electrically connected to a second electrode of the second transistor, a first electrode of the third transistor, and a gate electrode of the fourth transistor;

[0046] a gate electrode of the third transistor is electrically connected to the second gate signal line;

[0047] a first electrode of the fourth transistor is electrically connected to the electric current supply line; and

[0048] a second electrode of the fourth transistor is electrically connected to a first electrode of the light emitting device.

[0049] According to the present invention, there is provided a semiconductor device comprising a pixel including a light emitting device, characterized in that:

[0050] the pixel has:

[0051] a source signal line;

[0052] a gate signal line;

[0053] an electric current supply line;

[0054] first to fourth transistors; and

[0055] the light emitting device;

[0056] a gate electrode of the first transistor is electrically connected to the gate signal line;

[0057] a first electrode of the first transistor is electrically connected to the source signal line;

[0058] a second electrode of the first transistor is electrically connected to a first electrode of the second transistor;

[0059] a gate electrode of the second transistor is electrically connected to a second electrode of the second transistor, a first electrode of the third transistor, and a gate electrode of the fourth transistor;

[0060] a gate electrode of the third transistor is electrically connected to the first gate signal line of a pixel in a row scanned at least one row previously;

[0061] a first electrode of the fourth transistor is electrically connected to the electric current supply line; and

[0062] a second electrode of the fourth transistor is electrically connected to a first electrode of the light emitting device.

[0063] According to the present invention, there is provided a semiconductor device comprising a pixel including a light emitting device, characterized in that:

[0064] the pixel has:

[0065] a source signal line;

[0066] first and second gate signal lines;

[0067] an electric current supply line;

[0068] first to fourth transistors; and

[0069] the light emitting device;

[0070] a gate electrode of the first transistor is electrically connected to the first gate signal line;

[0071] a first electrode of the first transistor is electrically connected to a gate electrode and a first electrode of the second transistor;

[0072] a second electrode of the first transistor is electrically connected to a first electrode of the third transistor and a gate electrode of the fourth transistor;

[0073] a second electrode of the second transistor is electrically connected to the source signal line;

[0074] a gate electrode of the third transistor is electrically connected to the second gate signal line;

[0075] a first electrode of the fourth transistor is electrically connected to the electric current supply line; and

[0076] a second electrode of the fourth transistor is electrically connected to a first electrode of the light emitting device.

[0077] According to the present invention, there is provided a semiconductor device comprising a pixel including a light emitting device, characterized in that:

[0078] the pixel has:

[0079] a source signal line;

[0080] first and second gate signal lines;

[0081] an electric current supply line;

[0082] first to fourth transistors; and

[0083] the light emitting device;

[0084] a gate electrode of the first transistor is electrically connected to the first gate signal line;

[0085] a first electrode of the first transistor is electrically connected to a gate electrode of the second transistor, a first electrode of the second transistor, and a first electrode of the third transistor;

[0086] a second electrode of the first transistor is electrically connected to a gate electrode of the fourth transistor;

[0087] a gate electrode of the third transistor is electrically connected to the second gate signal line;

[0088] a first electrode of the fourth transistor is electrically connected to the electric current supply line; and

[0089] a second electrode of the fourth transistor is electrically connected a first electrode of the light emitting device.

[0090] According to the present invention, there is provided a semiconductor device comprising a pixel including a light emitting device, characterized in that:

[0091] the pixel has:

[0092] a source signal line;

[0093] a gate signal line;

[0094] an electric current supply line;

[0095] first to fourth transistors; and

[0096] the light emitting device;

[0097] a gate electrode of the first transistor is electrically connected to the first gate signal line;

[0098] a first electrode of the first transistor is electrically connected to a gate electrode of the second transistor, a first electrode of the second transistor, and a first electrode of the third transistor;

[0099] a second electrode of the first transistor is electrically connected to a gate electrode of the fourth transistor;

[0100] a gate electrode of the third transistor is electrically connected to the gate signal line of a pixel in a row scanned at least one row previously;

[0101] a first electrode of the fourth transistor is electrically connected to the electric current supply line; and

[0102] a second electrode of the fourth transistor is electrically connected a first electrode of the light emitting device.

[0103] According to the present invention, there is provided a semiconductor device characterized in that the second electrode of the third transistor of one pixel is electrically connected to a reset electric power source line.

[0104] According to the present invention, there is provided a semiconductor device characterized in that the second electrode of the third transistor of one pixel is electrically connected to any one of the gate signal lines included in any of the pixels scanned in a row different from the row including the one pixel.

[0105] According to the present invention, there is provided a semiconductor device comprising a pixel including a light emitting device, characterized in that:

[0106] the pixel has:

[0107] a source signal line;

[0108] first and second gate signal lines;

[0109] an electric current supply line;

[0110] first to fourth transistors; and

[0111] the light emitting device;

[0112] a gate electrode of the first transistor is electrically connected to the first gate signal line;

[0113] a first electrode of the first transistor is electrically connected to the source signal line;

[0114] a second electrode of the first transistor is electrically connected to a first electrode of the second transistor and a first electrode of the third transistor;

[0115] a gate electrode of the second transistor is electrically connected to a second electrode of the second transistor, a second electrode of the third transistor, and a gate electrode of the fourth transistor;

[0116] a first electrode of the fourth transistor is electrically connected to the electric current supply line; and

[0117] a second electrode of the fourth transistor is electrically connected a first electrode of the light emitting device.

[0118] According to the present invention, there is provided a semiconductor device comprising a pixel including a light emitting device, characterized in that:

[0119] the pixel has:

[0120] a source signal line;

[0121] first and second gate signal lines;

[0122] an electric current supply line;

[0123] first to third transistors;

[0124] capacitive means; and

[0125] the light emitting device;

[0126] a gate electrode of the first transistor is electrically connected to the first gate signal line;

[0127] a first electrode of the first transistor is electrically connected to the source signal line;

[0128] a second electrode of the first transistor is electrically connected to a first electrode of the second transistor;

[0129] a gate electrode of the second transistor is electrically connected to a second electrode of the second transistor and a gate electrode of the third transistor;

[0130] a first electrode of the third transistor is electrically connected to the electric current supply line;

[0131] a second electrode of the third transistor is electrically connected to a first electrode of the light emitting device;

[0132] a first electrode of the capacitive means is electrically connected to a gate electrode of the third transistor; and

[0133] a second electrode of the capacitive means is electrically connected to the second gate signal line.

[0134] According to the present invention, there is provided a semiconductor device comprising a pixel including a light emitting device, characterized in that:

[0135] the pixel has:

[0136] a source signal line;

[0137] first and second gate signal lines;

[0138] an electric current supply line;

[0139] first to third transistors;

[0140] a diode; and

[0141] the light emitting device;

[0142] a gate electrode of the first transistor is electrically connected to the first gate signal line;

[0143] a first electrode of the first transistor is electrically connected to the source signal line;

[0144] a second electrode of the first transistor is electrically connected to a first electrode of the second transistor;

[0145] a gate electrode of the second transistor is electrically connected to a second electrode of the second transistor and a gate electrode of the third transistor;

[0146] a first electrode of the third transistor is electrically connected to the electric current supply line;

[0147] a second electrode of the third transistor is electrically connected to a first electrode of the light emitting device;

[0148] a first electrode of the diode is electrically connected to a gate electrode of the third transistor;

[0149] a second electrode of the diode is electrically connected to the second gate signal line; and

[0150] electric current develops in only one direction when the electric potential of the second gate signal line is changed, either from the first electrode of the diode to the second electrode of the diode, or from the second electrode of the diode to the first electrode of the diode.

[0151] According to the present invention, there is provided a semiconductor device comprising a pixel including a light emitting device, characterized in that:

[0152] the pixel has:

[0153] a source signal line;

[0154] first to third gate signal lines;

[0155] an electric current supply line;

[0156] first to fifth transistors; and

[0157] the light emitting device;

[0158] a gate electrode of the first transistor is electrically connected to the first gate signal line;

[0159] a first electrode of the first transistor is electrically connected to the source signal line;

[0160] a second electrode of the first transistor is electrically connected to a first electrode of the second transistor;

[0161] a gate electrode of the second transistor is electrically connected to a second electrode of the second transistor, a first electrode of the third transistor, and a gate electrode of the fourth transistor;

[0162] a gate electrode of the third transistor is electrically connected to the second gate signal line;

[0163] a first electrode of the fourth transistor is electrically connected to the electric current supply line;

[0164] a second electrode of the fourth transistor is electrically connected to a first electrode of the light emitting device;

[0165] a gate electrode of the fifth transistor is electrically connected to the third gate signal line;

[0166] a first electrode of the fifth transistor is electrically connected to the electric current supply line;

[0167] a second electrode of the fifth transistor is electrically connected the gate electrode of the fourth transistor; and

[0168] the voltage between the gate and the source of the fourth transistor is set to zero by the fifth transistor becoming conductive.

[0169] According to the present invention, there is provided a semiconductor device comprising a pixel including a light emitting device, characterized in that:

[0170] the pixel has:

[0171] a source signal line;

[0172] first and second gate signal lines;

[0173] an electric current supply line;

[0174] first to fifth transistors; and

[0175] the light emitting device;

[0176] a gate electrode of the first transistor is electrically connected to the first gate signal line;

[0177] a first electrode of the first transistor is electrically connected to the source signal line;

[0178] a second electrode of the first transistor is electrically connected to a first electrode of the second transistor;

[0179] a gate electrode of the second transistor is electrically connected to a second electrode of the second transistor, a first electrode of the third transistor, and a gate electrode of the fourth transistor;

[0180] a gate electrode of the third transistor is electrically connected to the first gate signal line included in a pixel in a row scanned at least one row previously;

[0181] a first electrode of the fourth transistor is electrically connected to the electric current supply line;

[0182] a second electrode of the fourth transistor is electrically connected to a first electrode of the light emitting device;

[0183] a gate electrode of the fifth transistor is electrically connected to the second gate signal line;

[0184] a first electrode of the fifth transistor is electrically connected to the electric current supply line;

[0185] a second electrode of the fifth transistor is electrically connected the gate electrode of the fourth transistor; and

[0186] the voltage between the gate and the source of the fourth transistor is set to zero by the fifth transistor becoming conductive.

[0187] According to the present invention, there is provided a semiconductor device comprising a pixel including a light emitting device, characterized in that:

[0188] the pixel has:

[0189] a source signal line;

[0190] first to third gate signal lines;

[0191] an electric current supply line;

[0192] first to fifth transistors; and

[0193] the light emitting device;

[0194] a gate electrode of the first transistor is electrically connected to the first gate signal line;

[0195] a first electrode of the first transistor is electrically connected to the source signal line;

[0196] a second electrode of the first transistor is electrically connected to a first electrode of the second transistor;

[0197] a gate electrode of the second transistor is electrically connected to a second electrode of the second transistor, a first electrode of the third transistor, and a gate electrode of the fourth transistor;

[0198] a gate electrode of the third transistor is electrically connected to the second gate signal line;

[0199] a first electrode of the fourth transistor is electrically connected to the electric current supply line;

[0200] a second electrode of the fourth transistor is electrically connected to a first electrode of the fifth transistor;

[0201] a gate electrode of the fifth transistor is electrically connected to the third gate signal line;

[0202] a second electrode of the fifth transistor is electrically connected to a second electrode of the light emitting device; and

[0203] electric current supplied to the light emitting device from the electric current supply line is cut off by the fifth transistor becoming non-conductive.

[0204] According to the present invention, there is provided a semiconductor device comprising a pixel including a light emitting device, characterized in that:

[0205] the pixel has:

[0206] a source signal line;

[0207] first to third gate signal lines;

[0208] an electric current supply line;

[0209] first to fifth transistors; and

[0210] the light emitting device;

[0211] a gate electrode of the first transistor is electrically connected to the first gate signal line;

[0212] a first electrode of the first transistor is electrically connected to the source signal line;

[0213] a second electrode of the first transistor is electrically connected to a first electrode of the second transistor;

[0214] a gate electrode of the second transistor is electrically connected to a second electrode of the second transistor, a first electrode of the third transistor, and a gate electrode of the fourth transistor;

[0215] a gate electrode of the third transistor is electrically connected to the first gate signal line included in a pixel in a row scanned at least one row previously;

[0216] a first electrode of the fourth transistor is electrically connected to the electric current supply line;

[0217] a second electrode of the fourth transistor is electrically connected to a first electrode of the fifth transistor;

[0218] a gate electrode of the fifth transistor is electrically connected to the third gate signal line;

[0219] a second electrode of the fifth transistor is electrically connected to a second electrode of the light emitting device; and

[0220] electric current supplied to the light emitting device from the electric current supply line is cut off by the fifth transistor becoming non-conductive.

[0221] According to the present invention, there is provided a semiconductor device characterized in that the second electrode of the third transistor of one pixel is electrically connected to a reset electric power source line.

[0222] According to the present invention, there is provided a semiconductor device characterized in that the second electrode of the third transistor of one pixel is electrically connected to any one of the gate signal lines included in any pixel of any row that does not include the one pixel.

[0223] According to the present invention, there is provided a semiconductor device comprising a pixel including a light emitting device, characterized in that:

[0224] the pixel has:

[0225] a source signal line;

[0226] first and second gate signal lines;

[0227] an electric current supply line;

[0228] first to fifth transistors; and

[0229] the light emitting device;

[0230] a gate electrode of the first transistor is electrically connected to the first gate signal line;

[0231] a first electrode of the first transistor is electrically connected to the source signal line;

[0232] a second electrode of the first transistor is electrically connected to a first electrode of the second transistor;

[0233] a gate electrode of the second transistor is electrically connected to a second electrode of the second transistor, a first electrode of the third transistor, and a gate electrode of the fourth transistor;

[0234] a gate electrode of the third transistor is electrically connected to the first gate signal line included in a pixel in a row scanned at least one row previously;

[0235] a second electrode of the third transistor is electrically connected to the second gate signal line;

[0236] a first electrode of the fourth transistor is electrically connected to the electric current supply line;

[0237] a second electrode of the fourth transistor is electrically connected to a first electrode of the fifth transistor;

[0238] a gate electrode of the fifth transistor is electrically connected to the second gate signal line;

[0239] a second electrode of the fifth transistor is electrically connected to a first electrode of the light emitting device; and

[0240] electric current supplied to the light emitting device from the electric current supply line is cut off by the fifth transistor becoming non-conductive.

[0241] According to the present invention, there is provided a semiconductor device comprising a pixel including a light emitting device, characterized in that:

[0242] the pixel has:

[0243] a source signal line;

[0244] first and second gate signal lines;

[0245] an electric current supply line;

[0246] first to fifth transistors; and

[0247] the light emitting device;

[0248] a gate electrode of the first transistor is electrically connected to the first gate signal line;

[0249] a first electrode of the first transistor is electrically connected to the source signal line;

[0250] a second electrode of the first transistor is electrically connected to a first electrode of the second transistor;

[0251] a gate electrode of the second transistor is electrically connected to a second electrode of the second transistor, a first electrode of the third transistor, and a gate electrode of the fourth transistor;

[0252] a gate electrode of the third transistor is electrically connected to the first gate signal line included in a pixel in a row scanned at least one row previously;

[0253] a second electrode of the third transistor is electrically connected to the first gate signal line;

[0254] a first electrode of the fourth transistor is electrically connected to the electric current supply line;

[0255] a second electrode of the fourth transistor is electrically connected to a first electrode of the fifth transistor;

[0256] a gate electrode of the fifth transistor is electrically connected to the second gate signal line;

[0257] a second electrode of the fifth transistor is electrically connected to a first electrode of the light emitting device; and

[0258] electric current supplied to the light emitting device from the electric current supply line is cut off by the fifth transistor becoming non-conductive.

[0259] According to the present invention, there is provided a semiconductor device characterized in that:

[0260] the semiconductor device includes storage capacitive means;

[0261] a first electrode of the storage capacitive means is electrically connected to the second electrode of the first transistor;

[0262] a fixed electric potential is imparted to a second electrode of the storage capacitive means; and

[0263] the electric potential of the second electrode of the first transistor is stored.

[0264] According to the present invention, there is provided a semiconductor device characterized in that:

[0265] the semiconductor device includes storage capacitive means;

[0266] a first electrode of the storage capacitive means is electrically connected to a gate electrode of the fourth transistor;

[0267] a fixed electric potential is imparted to a second electrode of the storage capacitive means; and

[0268] the electric potential applied to the gate electrode of the fourth transistor is stored.

[0269] According to the present invention, there is provided a method of driving a semiconductor device, the semiconductor device comprising:

[0270] a switching device; and

[0271] a rectifying device,

[0272] the semiconductor device being characterized in that:

[0273] a first signal V1 is input to a first electrode of the rectifying device;

[0274] a second electrode of the rectifying device is electrically connected to a first electrode of the switching device;

[0275] a certain electric potential V is imparted to a second electrode of the switching device,

[0276] the method of driving the semiconductor device being characterized by comprising:

[0277] a first step of making the switching device conductive, thus setting the electric potential of the second electrode of the rectifying device to V;

[0278] a second step of making the switching device non-conductive, thus making the voltage between both the electrodes of the rectifying device converge to a threshold value Vth from the state of the first step; and

[0279] a third step of storing the threshold value Vth and obtaining an offset signal V2 , which is equal to the signal V1 offset by the threshold value Vth, from the second electrode of the rectifying device.

[0280] According to the present invention, there is provided a method of driving a semiconductor device, the semiconductor device comprising:

[0281] first and second switching devices; and

[0282] a rectifying device,

[0283] the semiconductor device being characterized in that:

[0284] a first signal V1 is input to a first electrode of the first switching device;

[0285] a second electrode of the first switching device is electrically connected to a first electrode of the rectifying device;

[0286] a second electrode of the rectifying device is electrically connected to a first electrode of the second switching device; and

[0287] a certain electric potential V is imparted to a second electrode of the second switching device,

[0288] the method of driving the semiconductor device being characterized by comprising:

[0289] a first step of making the second switching device conductive, thus setting the electric potential of the second electrode of the rectifying device to V;

[0290] a second step of further making the first switching device conductive, thus setting the electric potential of the first electrode of the rectifying device to V1 from the state of the first step;

[0291] a third step of making the second switching device non-conductive, thus making the voltage between both the electrodes of the rectifying device converge to a threshold value Vth from the state of the second step;

[0292] a fourth step of further making the first switching device non-conductive, thus storing the threshold value Vth and obtaining an offset signal V2 , which is equal to the signal V1 offset by the threshold value Vth, from the second electrode of the rectifying device, from the state of the third step.

[0293] According to the present invention, there is provided a method of driving a semiconductor device, the semiconductor device comprising first and second rectifying devices, the semiconductor being device characterized in that:

[0294] a first signal V1 is input to a first electrode of the rectifying device;

[0295] a second electrode of the first rectifying device is electrically connected to a first electrode of the second rectifying device; and

[0296] a certain electric potential V is imparted to a second electrode of the second rectifying device,

[0297] the method of driving the semiconductor device being characterized by comprising:

[0298] a first step of making the electric potential of the second electrode of the second rectifying device go from V to V0 (where V0>V) when V1>(V−|Vth|), thus cutting off electric current flowing in the second rectifying device; and

[0299] a second step of obtaining an offset signal V2 , which is equal to the signal V1 offset by the threshold value Vth, from the second electrode of the first rectifying device.

[0300] According to the present invention, there is provided a method of driving a semiconductor device characterized in that:

[0301] the rectifying device uses a transistor having a connection between its gate and its drain;

[0302] V1+Vth<V, and V2=V1+Vth are satisfied when the polarity of the transistor is n-channel and its threshold value is Vth; and

[0303] V1>V+|Vth|, and V2=V1−|Vth| are satisfied when the polarity of the transistor is p-channel and its threshold value is Vth.

[0304] According to the present invention, there is provided a method of driving a semiconductor device characterized in that:

[0305] the rectifying device uses a diode; and

[0306] V1>V+Vth, and V2=V1+Vth, or V1<V−|Vth|, and V2=V1−|Vth| are satisfied when the threshold value of the diode is Vth.

DESCRIPTION OF DRAWINGS

[0307] **FIGS. 1A and 1B** are diagrams showing an embodiment mode of the present invention.

[0308] FIGS. **2A-2C** are diagrams for explaining operations by the structure shown in **FIG. 1**.

[0309] FIGS. **3A-3D** are diagrams for explaining an embodiment mode of the present invention, and operation of the embodiment mode.

[0310] FIGS. **4A-4D** are diagrams for explaining an embodiment mode of the present invention, and operation of the embodiment mode.

[0311] FIGS. **5A-5D** are diagrams for explaining an embodiment mode of the present invention, and operation of the embodiment mode.

[0312] **FIGS. 6A and 6B** are diagrams for explaining an embodiment mode of the present invention, and operation of the embodiment mode.

[0313] FIGS. **7A-7E** are diagrams for explaining an embodiment mode of the present invention, and operation of the embodiment mode.

[0314] **FIGS. 8A and 8B** are diagrams showing an embodiment mode of the present invention.

[0315] FIGS. **9A-9C** are diagrams for explaining an embodiment mode of the present invention, and operation of the embodiment mode.

[0316] FIGS. **10A-10C** are diagrams for explaining an embodiment mode of the present invention, and operation of the embodiment mode.

[0317] FIGS. **11A-11C** are diagrams showing a timing for operations by the structure shown in **FIG. 9**.

[0318] FIGS. **12A-12C** are diagrams showing a timing for operations by the structure shown in **FIG. 10**.

[0319] FIGS. **13A-13D** are diagrams for explaining a process of manufacturing a light emitting device.

[0320] FIGS. **14A-14D** are diagrams for explaining a process of manufacturing the light emitting device.

[0321] FIGS. **15A-15D** are diagrams for explaining a process of manufacturing a light emitting device.

[0322] **FIGS. 16A and 16B** are diagrams for explaining an embodiment mode of the present invention, and operation of the embodiment mode.

[0323] FIGS. **17A-17C** are diagrams for explaining operations by the structure shown in **FIG. 16**.

[0324] **FIGS. 18A and 18B** are diagrams for explaining an embodiment mode of the present invention, and operation of the embodiment mode.

[0325] FIGS. **19A-19C** are diagrams for explaining operations by the structure shown in **FIG. 18**.

[0326] **FIG. 20** is a diagram showing the structure of a pixel of a general light emitting device.

[0327] FIGS. **21A-21C** are diagrams for explaining operation by a method of combining a digital gray scale method and a time gray scale method.

[0328] **FIGS. 22A and 22B** are diagrams showing an example of the structure of a pixel which performs TFT threshold value correction.

[0329] FIGS. **23A-23F** are diagrams for explaining operations by the structure shown in **FIG. 22**.

[0330] FIGS. **24A-24C** are diagrams for explaining an outline of a light emitting device employing an analog signal method.

[0331] **FIGS. 25A and 25B** are diagrams showing examples of the structure of a source signal line driver circuit and a gate signal line driver circuit used in **FIG. 24**.

[0332] **FIGS. 26A and 26B** are diagrams for explaining an outline of a light emitting device employing a digital signal method.

[0333] **FIGS. 27A and 27B** are diagrams showing examples of the structure of a source signal line driver circuit used in **FIG. 25**.

[0334] **FIGS. 28A and 28B** are diagrams showing examples of pulse width adjustments by a general shift register using D-FF.

[0335] FIGS. **29A-29F** are diagrams for explaining the operating principle of the present invention.

[0336] FIGS. **30A-30C** are an upper surface diagram and a cross sectional diagrams, respectively, of a light emitting device.

[0337] FIGS. **31 A-31 H** are diagrams showing examples of electronic equipment capable of applying the present invention.

[0338] FIGS. **32A-32E** are diagrams for explaining an additional structural example that differs from the embodiment modes of the present invention.

[0339] FIGS. **33A-33E** are diagrams for explaining an additional structural example that differs from the embodiment modes of the present invention.

[0340] **FIGS. 34A and 34B** are diagrams for explaining an additional structural example that differs from the embodiment modes of the present invention.

[0341] FIGS. **35A-35E** are diagrams for explaining an additional structural example that differs from the embodiment modes of the present invention.

[0342] FIGS. **36A-36E** are diagrams for explaining an additional structural example that differs from the embodiment modes of the present invention.

[0343] FIGS. **37A-37E** are diagrams for explaining an additional structural example that differs from the embodiment modes of the present invention.

[0344] FIGS. **38A-38E** are diagrams for explaining an additional structural example that differs from the embodiment modes of the present invention.

[0345] FIGS. **39A-39E** are diagrams for explaining an additional structural example that differs from the embodiment modes of the present invention.

[0346] FIGS. **40A-40E** are diagrams for explaining an additional structural example that differs from the embodiment modes of the present invention.

[0347] **FIGS. 41A and 41B** are diagrams showing an example of structuring an electric current source circuit by use of a threshold value correction principle of the present invention.

[0348] **FIGS. 42A and 42B** are diagrams showing an example of structuring an electric current source circuit by use of a threshold value correction principle of the present invention.

[0349] **FIGS. 43A and 43B** are diagrams showing an example of structuring an electric current source circuit by use of a threshold value correction principle of the present invention.

[0350] **FIGS. 44A and 44B** are diagrams showing an example of structuring an electric current source circuit by use of a threshold value correction principle of the present invention.

[0351] Like reference symbols in the various drawings indicate like elements.

DETAILED DESCRIPTION

[0352] The invention may be discussed in the context of a general light emitting device. **FIG. 20** shows the structure of a pixel in a general light emitting device. Note that an example of an EL display device is taken as a typical light emitting device. The pixel shown in **FIG. 20** has a source signal line **2001**, a gate signal line **2002**, a switching TFT **2003**, a driver TFT **2004**, capacitive means **2005**, an EL device **2006**, an electric current supply line **2007**, and an electric power source line **2008**.

[0353] The connectivity relationship of each portion is explained. A TFT has three terminals here, a gate, a source, and a drain, and it is not possible to clearly distinguish between the source and the drain due to the TFT structure. One of the source and the drain is therefore referred to as a first electrode when explaining connections between the devices, while the other is referred to as a second electrode. The terms source, drain, and the like are used, however, when it is necessary to explain the TFT turning on and off, and thus the electric potential and the like of each terminal (such as the voltage between the gate and the source of a certain TFT).

[0354] Further, in this specification, the TFT turning on refers to a state in which the voltage between the gate and the source of the TFT exceeds the threshold value of the TFT, and an electric current flows between the source and the drain. The TFT turning off refers to a state in which the voltage between the gate and the source of the TFT is less than the threshold value of the TFT, and electric current does not flow between the source and the drain.

[0355] A gate electrode of the switching TFT **2003** is connected to the gate signal line **2002**, a first electrode of the switching TFT **2003** is connected to the source signal line **2001**, and a second electrode of the switching TFT **2003** is connected to a gate electrode of the driver TFT **2004**. The first electrode of the driver TFT **2004** is connected to the electric current supply line **2007**, and a second electrode of the driver TFT **2004** is connected to a first electrode of the EL device **2006**. A second electrode of the EL device **2006** is connected to the electric power source line **2008**. The electric current supply line **2007** and the electric power source line **2008** have a mutual electric potential difference. Further, the capacitive means **2005** may be formed between the gate electrode of the driver TFT **2004** and the first electrode thereof in order to store the voltage between the gate and the source of the driver TFT **2004**.

[0356] An image signal output to the source signal line **2001** is then input to the gate electrode of the driver TFT **2004** if a pulse is input to the gate signal line **2002** and the switching TFT **2003** is turned on. The voltage between the gate and the source of the driver TFT **2004**, and the amount of electric current flowing between the source and the drain of the driver TFT **2004** (hereinafter referred to as drain current), are determined in accordance with the electric potential of the input image signal. This electric current is then supplied to the EL device **2006**, which emits light.

[0357] TFTs formed by using polycrystalline silicon (polysilicon, hereinafter referred to as P-Si) have a higher field effect mobility, and a larger on current, than TFTs formed by using amorphous silicon (hereinafter referred to as A-Si), and are therefore more suitable as transistors used in light emitting devices.

[0358] Conversely, TFTs formed by using polysilicon have a problem in that dispersion in their electrical characteristics tends to develop due to defects in crystal grain boundaries.

[0359] If there is dispersion per pixel in the threshold values of the TFTs structuring the pixels shown in **FIG. 20**, the sizes of the corresponding drain currents flowing in the TFTs differ, even if the same image signal is input, and there is dispersion in the brightness of the EL devices **2006**. This therefore becomes a problem when using analog gray scales.

[0360] In view of this problem, it has been proposed recently that the TFT threshold value dispersion can be corrected. A structure shown in **FIG. 22** can be given as one example of such a proposal. The structure has a source signal line **2201**, a first gate signal line **2202**, a second gate signal line **2203**, a third gate signal line **2204**, TFTs **2205** to **2208**, storage means **2209** (C2) and **2210** (C1), an EL device **2211**, and an electric current supply line **2212**.

[0361] A gate electrode of the TFT **2205** is connected to the first gate signal line **2202**, a first electrode of the TFT **2205** is connected to the source signal line **2201**, and a second electrode of the TFT **2205** is connected to a first electrode of the capacitive means **2209**. A second electrode of the capacitive means **2209** is connected to a first electrode of the capacitive means **2210**, and a second electrode of the capacitive means **2210** is connected to the electric current supply line **2212**. A gate electrode of the TFT **2206** is connected to the second electrode of the capacitive means **2209** and the first electrode of the capacitive means **2210**. A first electrode of the TFT **2206** is connected to the electric current supply line **2212**, and a second electrode of the TFT **2206** is connected to a first electrode of the TFT **2207** and a first electrode of the TFT **2208**. A gate electrode of the TFT **2207** is connected to the second gate signal line **2203**, and a second electrode of the TFT **2207** is connected to the second electrode of the capacitive means **2209** and the first electrode of the capacitive means **2210**. A gate electrode of the TFT **2208** is connected to the third gate signal line **2204**, and a second electrode of the TFT **2208** is connected to a first electrode of the EL device **2211**. A second electrode of

the EL device **2211** is connected to the electric power source line **2213**, and has a mutual electric potential difference with the electric current supply line **2212**.

[**0362**] Operation is explained using **FIG. 22**B and **FIGS. 23A** to **23**F. **FIG. 22B** shows a timing for inputting an image signal and pulses to the source signal line **2201**, the first gate signal line **2202**, the second gate signal line **2203**, and the third gate signal line **2204**, and is divided into sections I to VIII corresponding to each operation shown in **FIG. 23**. Further, a structure using four TFTs is employed by the pixel shown in **FIG. 22**, and the polarity of each of the TFTs is p-channel. The TFTs therefore turn on if L level is input to their gate electrodes, and turn off if H level is input. Further, although the image signal input to the source signal line **2201** is shown by pulses here in order to display only the input period, predetermined analog electric potentials are used with an analog gray scale method.

[**0363**] The first gate signal line **2202** initially becomes L level, and the TFT **2205** turns on (section I). The second gate signal line **2203** and the third gate signal line **2204** then become L level, and the TFTs **2207** and **2208** turn on. Here, electric charge accumulates in the capacitive means **2209** and **2210** as shown in **FIG. 23**A, and the TFT **2206** turns on at the point where the voltage stored by the capacitive means **2210** exceeds the threshold value (Vth) of the TFT **2206** (section II).

[**0364**] The third gate signal line **2204** then becomes H level, and the TFT **2208** turns off. The electric charge that has accumulated in the capacitive means **2209** and **2210** thus moves once again, and the voltage stored in the capacitive means **2210** soon becomes equal to Vth. The electric potentials of the electric current supply line **2212** and the source signal line **2201** are both VDD at this point as shown in **FIG. 23**B, and therefore the voltage stored in the capacitive means **2209** also becomes equal to Vth. Consequently, the TFT **2206** soon turns off.

[**0365**] As discussed above, the second gate signal line **2203** becomes H level and the TFT **2207** turns off at the point where the voltages stored in the capacitive means **2209** and **2210** become equal to Vth (section IV). The voltage Vth is thus stored in the capacitive means **2209** by this operation as shown in **FIG. 23C**.

[**0366**] A relationship like that of Equation (1) is established for an electric charge Q1 stored in the capacitive means **2210** (C1). At the same time, a relationship like that of Equation (2) is established for an electric charge Q2 stored in the capacitive means **2209** (C2).

[**0367**] [Equation (1)]

$$Q1=C1\times|Vth| \tag{1}$$

[**0368**] [Equation (2)]

$$Q2=C2\times|Vth| \tag{2}$$

[**0369**] Input of the image signal is then performed as shown in **FIG. 23D** (section V). The image signal is output to the source signal line **2201**, and the electric potential of the source signal line **2201** changes from VDD to an electric potential VData of the image signal (the TFT **2206** is a p-channel TFT here, and therefore VDD>VData). If the electric potential of the gate electrode of the TFT **2206** is taken as VP at this point, and the electric charge in this node is taken as Q, then relationships like those of Equations (3) and (4) are established due to conservation of charge contained in the capacitive means **2209** and **2210**.

[**0370**] [Equation (3)]

$$Q+Q1=C1\times(VDD-VP) \tag{3}$$

[**0371**] [Equation (4)]

$$Q-Q2=C2\times(VP-VData) \tag{4}$$

[**0372**] From Equations (1) to (4), the electric potential VP of the gate electrode of the TFT **2206** can be expressed by Equation (5).

[Equation (5)]

$$V_P = \frac{C_1}{C_1+C_2}V_{DD} + \frac{C_2}{C_1+C_2}V_{Data} - \left|V_{th}\right| \tag{5}$$

[**0373**] A voltage VGS between the gate and the source of the TFT **2206** is therefore expressed by Equation (6).

[Equation (6)]

$$\begin{aligned} V_{GS} &= V_P - V_{DD} \\ &= \frac{C_2}{C_1+C_2}(V_{Data}-V_{DD}) - \left|V_{th}\right| \\ &= \frac{C_2}{C_1+C_2}(V_{Data}-V_{DD}) + \left|V_{th}\right| \end{aligned} \tag{6}$$

[**0374**] The term Vth is included in the right side of Equation (6). That is, the threshold value of the TFT **2206** is added to the image signal input to the pixel from the source signal line **2201**, and is stored by the capacitive means **2209** and **2210**.

[**0375**] The first gate signal line **2202** becomes H level when input of the image signal is complete, and the TFT **2205** turns off (section VI). The source signal line then returns to a predetermined electric potential (section VII). Operations for writing the image signal into the pixel are thus complete (**FIG. 23E**).

[**0376**] The third gate signal line **2204** then becomes L level, the TFT **2208** turns on, electric current flows in the EL device **2211** as shown in **FIG. 23**F, and the EL device **2211** thus emits light. The value of electric current flowing in the EL device **2211** at this point is in accordance with the voltage between the gate and the source of the TFT **2206**. A drain current IDS flowing in the TFT **2206** is expressed by Equation (7).

[Equation (7)]

$$\begin{aligned} I_{DS} &= \frac{\beta}{2}(V_{GS}-V_{th})^2 \\ &= \frac{\beta}{2}\left\{\frac{C_2}{C_1+C_2}(V_{Data}-V_{DD})\right\}^2 \end{aligned} \tag{7}$$

[**0377**] It can be understood from Equation (7) that the drain current IDS flowing in the TFT **2206** does not depend

upon the threshold value Vth. It can therefore be understood that, even if there is dispersion per pixel in the threshold values of the TFTs **2206**, those values are corrected and added to the image signal, and electric current thus flows in the EL devices **2211** in accordance with the electric potential VData of the image signal.

[**0378**] However, if there is dispersion in the capacitance values of the capacitive means **2209** and **2210** in the aforementioned structure, then there is also dispersion in the drain current IDS of the TFTs **2206**. Therefore, an object of the present invention is to provide a light emitting device using as a pixel a semiconductor device that is capable of correcting dispersion in TFT threshold values, by employing a structure that is not influenced by dispersion in capacitance values.

[**0379**] The operating principle of the present invention is explained using **FIG. 29**. Consider circuits like those of **FIGS. 29A and 29B**. Switching devices **2901**, **2903**, **2911**, and **2913** are each devices controlled by signals Signal 1 and Signal 2, and are capable of turning on and off by TFTs or the like. A device in which electric current only develops in a single direction when an electric potential difference is imparted to electrodes at both ends of the device is defined as a rectifying device here. Diodes, and TFTs that have a connection between their gate and drain (this type of connection is referred to as diode connection) can be given as examples of rectifying devices.

[**0380**] Consider circuits in which the switching devices **2901** and **2911**, rectifying devices **2902** and **2912**, and the switching devices **2903** and **2913** are connected as shown in **FIGS. 29A and 29B**.

[**0381**] A certain signal is input from one terminal of the circuit, and a certain fixed electric potential is imparted to the other terminal of the circuit. The signal input in **FIG. 29A** is taken as Vx, and the fixed electric potential is taken as VSS (VSS£Vx−|VthP|, where VthP is the TFT threshold value), while the signal input in **FIG. 29B** is also taken as Vx, and the fixed electric potential is taken as VDD (VDD>Vx+|VthN|, where VthN is the TFT threshold value).

[**0382**] Now, the switching devices **2903** and **2913** are conductive in a period denoted by reference symbol i in **FIG. 29C**. The electric potentials of a drain electrode and a gate electrode of the TFT **2902**, which is a rectifying device (a diode connected TFT is used here as the rectifying device), thus drop in **FIG. 29A**. The electric potentials of a second electrode and a gate electrode of the TFT **2912** rise in **FIG. 29B**. The voltage between both electrodes exceeds the absolute value of the threshold values for both of the rectifying devices **2902** and **2912**, and therefore the TFTs **2902** and **2912** turn on. Note that the switching devices **2901** and **2911** are both off at this point, and electric current does not flow.

[**0383**] Thereafter, the switching devices **2901**, **2903**, **2911**, and **2913** are conductive in a period denoted by reference symbol ii in **FIG. 29C**. In this period, the voltages between the gate and the source for the TFTs **2902** and **2912** become VSS−Vx and VDD−Vx, respectively, exceeding the absolute values of the threshold values of the TFTs, and electric current flows from Vx to VSS, and from VDD to Vx.

[**0384**] The switching devices **2901** and **2911** are then conductive in a period denoted by reference symbol iii in **FIG. 29**C, and the switching devices **2903** and **2913** become on-conductive. The electric potentials of the sources of the TFTs **2902** and **2912** are Vx at this point. The voltages between the gate and the source of the TFTs **2902** and **2912** exceed the absolute values of their respective threshold values, the TFTs **2902** and **2912** are in an on state, and therefore electric current continues to flow. The drain electric potential of the TFT **2902** thus increases, and the drain electric potential of the TFT **2912** decreases. The voltage between the gate and the source of the TFT **2902**, and the voltage between the gate and the source of the TFT **2912** soon become equal to their respective threshold values, and the TFTs **2902** and **2912** both turn off. At this point, the drain electric potentials of the TFTs **2902** and **2912** become Vx−|VthP| and Vx+|VthN|, respectively. That is, operations for adding the respective threshold values to the electric potential Vx of the input signal are performed by the TFTs **2902** and **2912**. If the electric potentials of the gate electrodes of the TFTs **2902** and **2912** are taken as VG2902 and VG2912, respectively, then VG**2902** and VG**2912** take on electric potentials as shown in **FIG. 29D** in the above operations.

[**0385**] A predetermined electric potential is applied to TFT gate electrodes in order to supply electric current to EL devices through the TFTs, which have connections between their gates and drains like those shown by the reference numerals **2902** and **2912** in **FIGS. 29A and 29B**, for image signals input to the pixels by the source signal lines in the present invention. An electric potential difference equal to the TFT threshold value develops here between the source and the drain in the TFTs having connections between their gates and drains. An electric potential equal to the image signal, offset by the threshold value, is therefore applied to driver TFT gate electrodes.

[**0386**] Note that diodes **2922** and **2932** may also be used for the TFTs **2902** and **2912**, respectively, as shown in **FIG. 29E**.

[**0387**] Further, diodes **2923** and **2933** may also be used for the TFTs **2903** and **2913**, respectively, as shown in **FIG. 29F**. Behavior similar to VG2902 and VG2912 can also be achieved by changing the electric potentials to VDD or VSS by the operations of the section iii in **FIG. 29C**.

[**0388**] In addition to diodes having a normal PN junction, diode connected TFTs may also be used here for the diodes.

[**0389**] Furthermore, both the switching devices **2901** and **2911** may also be omitted. That is, the signal Vx may also be input to the first electrodes of the rectifying devices **2902** and **2912**.

[**0390**] Methods have been discussed here with respect to the objectives of correcting dispersions in TFT threshold values of a light emitting device, and reducing dispersions in the brightness of EL devices, but the operating principle of the present invention is not limited to the correction of TFT threshold values in a light emitting device, and it is of course also possible to apply the present invention to other electronic circuits.

[**0391**] Structures of the present invention are described below.

[**0392**] Embodiment Modes of the Invention

[**0393**] Embodiment Mode 1

[**0394**] **FIG. 1A** shows a first embodiment mode of the present invention. The embodiment mode has a source signal line **101**, a first gate signal line **102**, a second gate

signal line **103**, TFTs **104** to **107**, an EL device **109**, an electric current supply line **110**, a reset electric power source line **111**, and an electric power source line **112**. In addition, a capacitive means **108** may also be formed in order to store an image signal.

[**0395**] A gate electrode of the TFT **104** is connected to the first gate signal line **102**, a first electrode of the TFT **104** is connected to the source signal line **101**, and a second electrode of the TFT **104** is connected to a first electrode of the TFT **105**. A gate electrode and a second electrode of the TFT **105** are connected to each other, and are connected to a first electrode of the TFT **106** and a gate electrode of the TFT **107**. A gate electrode of the TFT **106** is connected to the second gate signal line **103**, and a second electrode of the TFT **106** is connected to the reset electric power source line **111**. A first electrode of the TFT **107** is connected to the electric current supply line **110**, and a second electrode of the TFT **107** is connected to a first electrode of the EL device **109**. A second electrode of the EL device **109** is connected to the electric power source line **112**, and there is a mutual electric potential difference between the electric power source line **112** and the electric current supply line **110**. If the capacitive means **108** is formed, it may be formed between the gate electrode of the TFT **107** and a position at which a fixed electric potential can be obtained, such as the electric current supply line **110**. Further, the capacitive means **108** may also be formed between the second electrode of the TFT **104** and the fixed electric potential such as the electric current supply line **110**. Capacitive means may also be formed at both the locations if there is a desire to increase the value of the storage capacitance.

[**0396**] **FIG. 1B** shows the timing for pulses input to the first gate signal line and the second gate signal line. Operation is explained using **FIG.** 1B and **FIG. 2**. Note that a structure is used here in which the TFTs **104** and **106** are n-channel TFTs, and therefore the TFTs turn on when the electric potential of the gate signal line is H level, and the TFTs turn off when the electric potential of the gate signal line is L level. However, the TFTs **104** and **106** function as simple switching devices, and therefore any polarity may be used.

[**0397**] With the electric potential of the source signal line **101** taken as VDD, the electric potential of the electric current supply line taken as VDD, and the electric potential of the reset electric power source line taken as VReset (<VDD−|Vth|), a gate G, a source (S), a drain D of the TFT **105** are defined as shown in **FIG. 2A**. First, a pulse is input to the second gate signal line **103**, and the TFT **106** turns on. The electric potential of the drain of the TFT **105** thus drops as shown in **FIG. 2A, a** voltage VGS between the gate and the source of the TFT **105** becomes less than zero, and in addition, exceeds the absolute value of the threshold value Vth, and the TFT **105** turns on. At the same time, the voltage between the gate and the source of the TFT **107** exceeds the absolute value of the threshold value, and the TFT **107** thus turns on.

[**0398**] The TFT **106** then turns off, a pulse is input to the first gate signal line **102**, and the TFT **104** turns on. An image signal is output to the source signal line here, the electric potential of the source signal line becomes VData (VReset<VData<VDD), and therefore the electric potential of the source of the TFT **105** increases to VData. The electric potential of the gate electrode of the TFT **107**, that is the electric potential of the gate electrode of the TFT **105**, also rises through the TFT **105**. The voltage between the gate and the source of the TFT **105** becomes equal to the threshold value of the TFT **105** at the point where the electric potential becomes VData−|Vth|, and therefore the TFT **105** turns off. The electric potential of the gate electrode of the TFT **107**, that is the electric potential of the gate electrode of the TFT **105**, stops rising (**FIG. 2B**).

[**0399**] The TFT **104** then turns off, and operation transfers to a light emitting period. An electric potential obtained by adding the threshold value to a desired image signal electric potential, is applied to the gate electrode of the TFT **107** at this point, a proportional electric current flows from the electric current supply line **110**, through the TFT **107**, into the EL device **109** as shown in **FIG. 2**C, and the EL device **109** emits light. In practice, an electric potential exceeding the absolute value of the threshold value is applied to the gate electrode of the TFT **107** at the initialization stage of **FIG. 2**A, the TFT **107** turns on, and light is emitted at the maximum brightness. However, a period for selecting the first gate signal line and the second gate signal line is sufficiently short compared to the actual light emitting period. Light is emitted similarly for all cases, and therefore there is no influence on dispersions in the relative brightness.

[**0400**] Pixel control is performed by the aforementioned operations. A drain current IDS flowing in the TFT **107** at this point is expressed by Equation (8).

[Equation (8)] (8)

$$\begin{aligned} I_{DS} &= \frac{\beta}{2}(V_{GS} - V_{th})^2 \\ &= \frac{\beta}{2}\{(V_{Data} + V_{th} - V_{DD}) - V_{th}\}^2 \\ &= \frac{\beta}{2}\{(V_{Data} - V_{DD})\}^2 \end{aligned}$$

[**0401**] Even supposing that dispersion in the TFT threshold values develops in pixels within a screen, this is offset provided that the threshold values of the TFTs structuring one pixel, specifically the TFTs **105** and **107**, are equal. The drain current IDS no longer contains a threshold value term. That is, IDS can be determined irrespective of the threshold value, and influence caused by dispersion in the threshold values can be eliminated.

[**0402**] Embodiment Mode 2

[**0403**] A digital gray scale method for driving EL devices in only two states, a brightness of 100% and a brightness of 0%, by using a region in which TFT threshold values and the like do not easily influence on current, is proposed as a driving method that differs from the above analog gray scale method. Only two gray scales, white and black, can be expressed by this digital gray scale method, and therefore multiply gray scales are achieved by combining the digital gray scale method with a time gray scale method or the like.

[**0404**] The structure of a pixel of a semiconductor device for a case of using a method in which a digital gray scale method and a time gray scale method are combined is shown in **FIG. 21A**. It becomes possible to finely control the length

of a light emitting period by using an erasure TFT **2106** in addition to a switching TFT **2104** and a driver TFT **2105**.

[**0405**] One frame period is divided into a plurality of subframe periods when a digital gray scale method and a time gray scale method are combined, as shown in **FIG. 21B**. Each subframe period has an address (write in) period, a sustain (light emitting) period, and an erasure period. Subframe periods are formed corresponding to the number of display bits. The lengths of the sustain (light emitting) periods in each of the subframe periods are set to 2(n−1):2(n−2): . . . : 2:1. A selection is made between light emission and non-light emission for EL devices in each of the sustain (light emitting) periods, and gray scale expression is performed by utilizing the difference in the lengths of the total period of time during which each of the EL devices emits light. Brightness becomes higher as the total light emission period becomes longer, and brightness becomes lower as the total light emission period becomes shorter. Note that a 4-bit gray scale example is shown in **FIG. 21**, wherein one frame period is divided into four subframe periods. A total of 24=16 gray scales can be expressed by combining the sustain (light emitting) periods.

[**0406**] The lengths of the sustain periods of the less significant bits become short when realizing multiple gray scales by using a time gray scale method, and therefore an overlapping period develops if an address period begins immediately after the previous sustain (light emitting) period is complete, wherein the address (write in) periods of different subframe periods overlap. An image signal input to a certain pixel is also input to different pixels at the same time in this case, and therefore normal display becomes impossible. The erasure period is formed in order to resolve these kinds of problems, and is formed so that two different address (write in) periods do not overlap after sustain (light emitting) periods Ts3 and Ts4, as shown in **FIG. 21B**. The erasure periods therefore are not formed in subframe periods SF1 and SF2, which have sufficiently long sustain (light emitting) periods and no concern that two different address (write in) periods will overlap.

[**0407**] **FIG. 9A** is a diagram in which a third gate signal line **913** and an erasure TFT **914** are added to a pixel having the structure of Embodiment Mode 1, and a method of combining a digital gray scale method and a time gray scale method is used. A gate electrode of the erasure TFT **914** is connected to the third gate signal line **913**, a first electrode of the erasure TFT **914** is connected to a gate electrode of a TFT **907**, and a second electrode of the erasure TFT **914** is connected to an electric current supply line **910**. Further, if a capacitive means **908** is formed in order to store an image signal, it may be formed between the gate electrode of the TFT **907** and a position at which a fixed electric potential can be obtained, such as the electric current supply line **910**. The capacitive means **908** may also be formed between a second electrode of a TFT **904** and a fixed electric potential, such as the electric current supply line **910**, and the capacitive means may also be formed at both locations if there is a desire to increase the value of the storage capacitance.

[**0408**] Initialization and image signal input operations are similar to those disclosed by Embodiment Mode 1. Note that the erasure TFT **914** is off during a period for performing initialization and image signal input.

[**0409**] Operations from the sustain (light emitting) period to the erasure period are explained here using **FIG. 9** and **FIG. 11**. **FIG. 11 A** is a diagram similar to that of **FIG. 21** A, and one frame period has four subframe periods, as shown in **FIG. 11B**. Subframe periods SF3 and SF4, which have short sustain (light emitting) periods, have erasure periods Te3 and Te4, respectively. Operations during the subframe period SF3 are explained here as an example.

[**0410**] Electric current corresponding to the voltage between the gate and the source of the TFT **907** flows in an EL device **909** after image signal input is complete, as shown in **FIG. 9**B, and the EL device **909** emits light. A pulse is then input to the third gate signal line **913** when the timing for completion of the sustain (light emitting) period is reached, the erasure TFT **914** turns on, and the voltage between the gate and the source of the TFT **907** is set to zero, as shown in **FIG. 9C**. The TFT **907** therefore turns off, electric current flow to the EL device **909** is cutoff, and the EL device **909** is forcibly placed in a non-light emitting state.

[**0411**] A timing chart for these operations is shown in **FIG. 1C**. A pulse is input to the third gate signal line **913** after the sustain (light emitting) period Ts3, the EL device **909** becomes in a non-light emitting state. Next, a pulse is input to the second gate signal line **903**, and a period up through the beginning of initialization becomes the erasure period Te3.

[**0412**] The erasure TFT **914** used by Embodiment Mode 2 can also be used in combination with the structures of other embodiment modes.

[**0413**] Embodiment Mode 3

[**0414**] Operations in the erasure period in Embodiment Mode 2 cutoff the supply of electric current to the EL device **909** by setting the voltage between the gate and the source of the TFT **907** to zero, thus making the TFT **907** turn off. An example using another method is shown in **FIG. 10A**. The erasure TFT **914** is formed between the gate electrode of the TFT **907** and the electric current supply line **910** in Embodiment Mode 2, but in Embodiment Mode 3 the erasure TFT **914** is formed between the TFT **907** and the EL device **909**.

[**0415**] Initialization and image signal input operations are similar to those of Embodiment Mode 1. The erasure TFT **914** is on only during the sustain (light emitting) period. The erasure TFT **914** is off during initialization, image signal input, and the erasure period, and electric current to the EL device **909** is thus cutoff.

[**0416**] Differences with Embodiment Mode 2 from an operational perspective are discussed. If the erasure TFT **914** once turns on and the voltage between the gate and the source of the TFT **907** is set to zero, the EL device **909** thereafter does not emit light in Embodiment Mode 2, and a short pulse may therefore be input at the start of the erasure period, as shown in **FIG. 11**. In Embodiment Mode 3, however, it is necessary for the erasure TFT to be on throughout the sustain period, and therefore a pulse having the same length as the sustain (light emitting) period is input to the third gate signal line **913**, as shown in **FIG. 12**.

[**0417**] A specialized circuit is not necessary in order to generate this type of pulse. The length of an output pulse may be changed to be thereby generated as shown in **FIG. 28B** by changing the length of a start pulse input from the

outside by using a shift register composed of a plurality of stages of D-flip flop circuits **2801** made from a clocked inverter **2802**, an inverter **2803**, and the like, as shown in **FIG. 28A**. Fine adjustments in order to conform it to the sustain (light emitting) period can easily be performed by using a pulse width adjuster circuit or the like.

[**0418**] Note that, although the erasure TFT **914** uses an n-channel TFT in **FIG. 9** and **FIG. 10**, and therefore turns on when the third gate signal line is H level and turns off when the third gate signal line is L level, there are no particular limitations placed on the polarity of the erasure TFT **914**.

[**0419**] The erasure TFT **914** used by Embodiment Mode 3 can also be used in combination with the structures of other embodiment modes.

[**0420**] Embodiment Mode 4

[**0421**] Signal lines and electric power source lines used for driving one pixel in the structure disclosed in Embodiment Mode 1 are a source signal line, a first gate signal line, a second gate signal line, an electric current supply line, and a reset electric power source line. In Embodiment Modes 2 and 3, erasure TFT control is performed using an additional third gate signal line. It is clear that the surface area occupied by wirings in a pixel portion is large, even compared to the conventional structure shown in **FIG. 20** and the structure having an erasure TFT shown in **FIG. 21**.

[**0422**] A pixel having the structure shown in **FIG. 16** is used in Embodiment Mode 4. The structure has a source signal line **1601**, a first gate signal line **1603**, a second gate signal line **1604**, TFTs **1605** to **1609**, a capacitive means **1610**, an EL device **1611**, and electric current supply line **1612**, and the like as shown in **FIG. 16A**. The number of wirings per single pixel is four.

[**0423**] A structure is explained in which the pixel shown in **FIG. 16A** is anti-throw pixel. A gate electrode of the TFT **1605** is connected to the first gate signal line **1603** of an i-th row, a first electrode of the TFT **1605** is connected to the source signal line **1601**, and a second electrode of the TFT **1605** is connected to a first electrode of the TFT **1606**. A gate electrode and a second electrode of the TFT **1606** are connected to each other, and connected to a first electrode of the TFT **1607** and a gate electrode of the TFT **1608**. A gate electrode of the TFT **1607** is connected to the gate signal line **1602** of an (i−1)th row, and a second electrode of the TFT **1607** is connected to the second gate signal line. A first electrode of the TFT **1608** is connected to the electric current supply line **1612**, and a second electrode of the TFT **1608** is connected to a first electrode of the TFT **1609**. A gate electrode of the TFT **1609** is connected to the second gate signal line **1604** of the i-th row, and a second electrode of the TFT **1609** is connected to a first electrode of the EL device **1611**. A second electrode of the EL device **1611** is connected to the electric power source line **1613**, which has a mutual electric potential difference with the electric current supply line **1612**. The capacitive means **1610** is connected between a node containing the gate electrode of the TFT **1608** and the electric current supply line **1612**. The capacitive means **1610** stores an electric potential applied to the gate electrode of the TFT **1608** during the sustain (light emitting) period.

[**0424**] Operation is explained using **FIG. 16** and **FIG. 17**. Note that the TFTs **1605**, **1607**, and **1609** use n-channel TFTs in the example explained here, and therefore turn on when an H level pulse is input to their gate electrodes, and turn off when an L level pulse is input thereto. The reason that an n-channel TFT is used for the TFT **1609** here is that it is necessary for the second gate signal line of the i-th row to be L level when the TFT **1607** is on and initialization is performed, and that it is necessary for the TFT **1609** to be off at this time.

[**0425**] With the electric potential of the source signal line **1601** taken as VDD, the electric potential of the electric current supply line taken as VDD, and the electric potential when a gate signal line is L level taken as VReset (<VDD−|Vth|), a gate Q a source (S), a drain D of the TFT **1606** are defined as shown in **FIG. 17A**.

[**0426**] The TFT **1607** turns on when the first gate signal line **1602** of the (i−1)th row is selected, that is when image signal input into the (i−1)th row is performed, and the TFT **1607** in the i-th row of pixels turns on. The second gate signal line **1604** of the i-th row is L level at this point, and therefore the electric potential of the gate electrode of the TFT **1608** drops as shown in **FIG. 17A**. The electric potential of the gate electrode of the TFT **1608** is thus initialized.

[**0427**] The first gate signal line **1602** of the (i−1)th row becomes L level when image signal input in the (i−1)th row is complete, and the TFT **1607** turns off. On the other hand, the first gate signal line **1603** of the i-th row is selected, the TFT **1605** turns on, and the image signal is input to the i-th row. The voltage between the source and the drain of the TFT **1606** becomes equal to Vth when the electric potential of the image signal is VData (where VData+Vth<VDD), and the electric potential of the gate electrode of the TFT **1608** becomes (VData−Vth). Initialization is performed at this point in an (i+1)th row, similar to that discussed above (**FIG. 17B**).

[**0428**] The image signal input is complete, and the i-th row moves to the sustain (light emitting) period. An H level pulse is input to the second gate signal line **1604** of the i-th row, the TFT **1609** turns on, and electric current corresponding to the voltage between the gate and the source of the TFT **1608** flows in the EL device as shown in **FIG. 17C**. The EL device thus emits light.

[**0429**] Embodiment Mode 4 is characterized in that in order to perform initialization of a certain row, it utilizes the selection pulse of the gate signal line of the previous row in controlling the TFT **1607**, and that it utilizes non-selected gate signal lines that are left at a fixed electric potential as reset electric power source lines. The number of signal lines can be kept to a minimum and a high aperture ration can be obtained by using this type of structure, and a structure that performs operations similar to those of Embodiment Mode 2 can be achieved.

[**0430**] Note that, although the second electrode of the TFT **1607** is connected to the second gate signal line **1604**, it may also be connected to other signal lines, provided that the other signal lines become L level at the same timing as the TFT **1607** turns on. Further, although the TFT **1607** is controlled by the first gate signal line of the (i−1)th row, it may also be controlled by other rows, provided that they are rows before the i-th row.

[0431] Embodiment Mode 5

[0432] The TFT **1609** is n-channel in Embodiment Mode 4, and the reason is that one terminal of the TFT **1607** used in initialization, the source or the drain, is connected to the second gate signal line **1604** of the i-th row, as discussed above. In order to increase the aperture ratio within a pixel, and to reduce the tendency for dispersion in TFT characteristics to develop, it is preferable that the TFTs be disposed together as close as possible. A structure is therefore used in which a TFT **1809** is p-channel and capable of being disposed in very close proximity to a TFT **1808**, as shown in **FIG. 18A**.

[0433] A portion of the connections of a TFT **1807** used in initialization are changed. A gate electrode of the TFT **1807** is connected to the first gate signal line of the (i−1)th row, and a first electrode of the TFT **1807** is connected to a gate electrode of the TFT **1808**. This is because the TFT **1807** must be on during initialization, and the electric potential of the gate electrode of the TFT **1808** must drop. It is therefore necessary that the location to which one terminal, the source or the drain, of the TFT **1807** is connected become L level during this period. By making the TFT **1809** p-channel, the electric potential of a second gate signal line **1804** of the i-th row is H level during the period for performing initialization of the i-th row of pixels, and therefore cannot be used. The connecting point is therefore changed to a first gate signal line **1802** of the i-th row.

[0434] Circuit operation is shown in **FIGS. 19A** to **19**C. However, operation is similar to that of Embodiment Mode 4, except for the point that the H level and L level electric potentials of the second gate signal line **1804** of the i-th row are reversed, and therefore a detailed explanation is omitted here. By turning on and off, the TFT **1809** is used as a switching device for selecting whether an electric current supply path to an EL device is conductive or non-conductive, and therefore any polarity may be used for its operation. Suitable selections may therefore be made for Embodiment Mode 4 and Embodiment Mode 5 depending upon factors such as the actual circuit layout.

[0435] Note that, although the second electrode of the TFT **1807** is connected to the second gate signal line **1803**, it may also be connected to other signal lines, provided that the other signal lines become L level at the same timing as the TFT **1807** turns on. Further, although the TFT **1807** is controlled by the first gate signal line of the (i−1)th row, it may also be controlled by other rows, provided that they are rows before the i-th row.

[0436] Embodiment Mode 6

[0437] A structure in which a portion of the connections in the structure disclosed by Embodiment Mode 1 is changed is shown in **FIG. 3A**. The TFT **105**, which has a connection between its gate and drain, is formed between the second electrode of the TFT **104** and the gate electrode of the TFT **107** in Embodiment Mode 1, as shown in **FIG. 1**. In Embodiment Mode 6, however, a TFT **305**, which has a connection between its gate and drain, is formed between a source signal line **301** and a first electrode of a TFT **304**. Further, if a capacitive means **308** or the like is formed in order to store an image signal, then it may be formed between a second electrode of the TFT **304** and a fixed electric potential, such as an electric current supply line **310**.

[0438] Operation is explained using **FIGS. 3B** to **3**D. Note that a structure is used here in which the TFTs **304** and **306** are n-channel TFTs, and therefore the TFTs turn on when the electric potential of the gate signal line is H level, and the TFTs turn off when the electric potential of the gate signal line is L level. However, the TFTs **304** and **306** function as simple switching devices, and therefore any polarity may be used.

[0439] With the electric potential of the source signal line **301** taken as VDD, the electric potential of the electric current supply line taken as VDD, and the electric potential of a reset electric power source line taken as VReset (<VDD−|Vth|), a gate G, a source (S), a the drain D of the TFT **305** are defined as shown in **FIG. 3B**.

[0440] First, a pulse is input to a second gate signal line **303**, and a TFT **306** turns on. The pulse is input to a first gate signal line **302** during the period in which the TFT **306** is on, and the TFT **304** turns on. The electric potential of the drain of the TFT **305** thus drops as shown in **FIG. 3**B, and a voltage VGS between the gate and the source of the TFT **305** becomes less than zero, and in addition, exceeds the absolute value of the threshold value Vth, and the TFT **305** turns on. The TFT **306** is quickly turned off at the instant that the TFT **305** turns on when performing the aforementioned operations. If a state in which both of the TFTs **305** and **306** are turned on continues for a long time, then an electric current path soon develops between the source signal line **301** and the reset electric power source line **311**, and there are cases in which electric potential of a gate electrode of a TFT **307** does not become lower. At the same time, the voltage between the gate and the source of the TFT **307** exceeds the absolute value of the threshold value, and the TFT **307** turns on.

[0441] Input of an image signal is then performed. An image signal is output to the source signal line **301**, and the electric potential of the source signal line becomes VData (VReset<VData<VDD), and therefore the electric potential of the source of the TFT **305** increases to VData. Then, the electric potential of the gate electrode of the TFT **307** also rises through the TFTs **305** and **304**. The voltage between the gate and the source of the TFT **305** becomes equal to the threshold value of the TFT **307** at the point where the electric potential becomes VData−|Vth|, and therefore the TFT **305** turns off. The electric potential of the gate electrode of the TFT **307** stops rising (**FIG. 3C**).

[0442] Operation then passes to the light emitting period. Light emission begins at the point where the TFT **307** turns on, but electric current corresponding to the image signal first flows from the electric current supply line **310**, through the TFT **307**, and into the EL device **309**, after the image signal is input and the electric potential of the gate of the TFT **307** becomes (VData−Vth). The EL device **309** then emits light.

[0443] Embodiment Mode 7

[0444] A structure in which a portion of the connections in the structure disclosed by Embodiment Mode 6 is changed is shown in **FIG. 4A**. The TFT **304** is formed between the second electrode of the TFT **305** and the first electrode of the TFT **306** in Embodiment Mode 6, as shown in **FIG. 3A**. In Embodiment Mode 7, however, a TFT **404** is formed between a first electrode of a TFT **406** and a gate electrode

of a TFT **407**. Further, if a capacitive means **408** is formed in order to store an image signal, then it may be formed between the gate electrode of the TFT **407** and a portion where a fixed electric potential is obtained, such as an electric current supply line **410**. Further, the capacitive means **408** may also be formed between the second electrode of the TFT **405** and a fixed electric potential such as the electric current supply line **410**. Capacitive means may also be formed at both locations if there is a desire to increase the value of the storage capacitance.

[**0445**] Operation is explained using **FIGS. 4B** to 4D. Note that a structure in which the TFTs **404** and **406** are n-channel TFTs is shown here, and therefore the TFTs turn on when the electric potential of the gate signal line is H level, and the TFTs turn off when the electric potential of the gate signal line is L level. The TFTs **404** and **406** function as simple switching devices, however, and may therefore use any polarity.

[**0446**] The with the electric potential of the source signal line **401** taken as VDD, the electric potential of the electric current supply line taken as VDD, and the electric potential of a reset electric power source line taken as VReset (<VDD−|Vth|), a gate G, a source (S), a the drain D of the TFT **405** are defined as shown in **FIG. 4B**.

[**0447**] First, a pulse is input to a first gate signal line **402** and a second gate signal line **403**, and a TFTs **404** and **406** turn on. The electric potential of the drain of the TFT **405** thus drops as shown in **FIG.** 4B, and a voltage VGS between the gate and the source of the TFT **405** becomes less than zero, and in addition, exceeds the absolute value of the threshold value Vth, and the TFT **405** turns on. Initialization is thus completed. Note that TFT **404** may be turned off here.

[**0448**] Image signal input is then performed. The second gate signal line **403** becomes L level, and the TFT **406** turns off. The first gate signal line **402** becomes H level, and the TFT **404** turns on. The voltage between the gate and the source of the TFT **407** exceeds the absolute value of the threshold value, and the TFT **407** turns on. The electric potential of the source signal line becomes VData from VDD, and the electric potential applied to the gate electrode of the TFT **407** thus settles at (VData−Vth).

[**0449**] Operation then passes to the light emitting period. Light emission begins at the point where the TFT **407** turns on. However, a desired electric current first flows in the EL device **409** after the image signal is input and the electric potential of the gate of the TFT **407** becomes (VData−Vth). The first gate signal line becomes L level at the same time, and the TFT **404** turns off.

[**0450**] Embodiment Mode 8

[**0451**] A certain TFT is used in performing initialization before inputting an image signal in Embodiment Modes 1 to 7. **FIG. 5A** uses a diode **507** as a substitute for the TFT. A first electrode of the diode **507** is connected to a gate electrode and a second electrode of a TFT **505**, and a second electrode of the diode **507** is connected to a second gate signal line **503**. Further, if a capacitive means **508** is formed in order to store an image signal, it may be formed between a gate electrode of a TFT **506** and a position at which a fixed electric potential can be obtained, such as an electric current supply line **510**. Further, the capacitive means **508** may be formed between a second electrode of a TFT **504** and a fixed electric potential, such as the electric current supply line **510**, and the capacitive means **508** may also be formed in both locations if it is desired to make the storage capacitance value larger.

[**0452**] The only point that differs from Embodiment Mode 1 is initialization. Explanations of image signal input and light emission operations are omitted here, and operations during initialization are explained using **FIG. 5B**.

[**0453**] The second gate signal line **503** is set to H level in an initial state. A forward bias is applied to the diode if the electric potential of the second gate signal line **503** is reduced at an initialization timing. Electric current develops from the high electric potential side to the low electric potential side, that is as shown in **FIG.** 5B, and the electric potentials of the gates of the TFTs **505** and **506** are reduced. If the voltages between the gates and the sources of the TFTs **505** and **506** soon exceed the absolute values of the threshold values Vth of the TFTs **505** and **506**, respectively, the TFT **505** turns on. The second gate signal line **503** later returns once again to H level while input of the image signal is being performed. The image signal is then input, and the diode **507** is in a state in which a reverse bias is always applied, and electric current therefore does not develop.

[**0454**] A desired electric current then flows in the EL device **509**, similar to Embodiment Mode 1, and the EL device **509** emits light.

[**0455**] **FIG. 5C** shows an example in which a capacitive means **557** is formed as a substitute for the diode **507**. A first electrode of the capacitive means **557** is connected to a gate electrode and a second electrode of a TFT **555**, and to a gate electrode of a TFT **556**. A second electrode of the capacitive means **557** is connected to a second gate signal line **553**. Operation is also similar to that of **FIG. 5B** in this case. The second gate signal line **553** is set to H level in an initial state, and the electric potential of the second gate signal line **553** is reduced at an initialization timing. A TFT **554** is off at this point, and therefore the second electrode of the capacitive means **557** is in a floating state. If the electric potential of the first electrode of the capacitive means **557** is then reduced, the electric potential of the second electrode, that is the electric potential of the gate electrodes of the TFTs **555** and **556**, is also reduced due to capacitive coupling. If the voltages between the gates and the sources of the TFTs **555** and **556** soon exceed the absolute value of the threshold values Vth of the TFTs **555** and **556**, respectively, the TFTs **555** and **556** turn on.

[**0456**] The TFT **554** then turns on, and input of the image signal is performed. The second gate signal line **553** is L level at this point, but may also be set to H level while the image signal is being input, that is while the TFT **554** is on.

[**0457**] A desired electric current then flows in the EL device **559**, similar to Embodiment Mode 1, and the EL device **559** emits light.

[**0458**] In contrast to the gate signal line and the reset electric power source line, which are necessary for initialization in **FIG. 1**A, it is possible to perform initialization in accordance with the structure of Embodiment Mode 8 by using only the gate signal line (the second gate signal lines **503** and **553** in **FIG. 5**). The number of wirings needed in a pixel portion can therefore be reduced by one, and this contributes to increasing the aperture ratio.

[0459] Embodiment Mode 9

[0460] **FIG. 6A** shows a structure in which a portion of the connections in the structure disclosed by Embodiment Mode 1 is changed. The second electrode of the TFT **106** is connected to the reset electric power source line **111** in Embodiment Mode 1, as shown in **FIG. 1**, but in Embodiment Mode 9, the connection is made in an i-th row pixel to a first gate signal line of an (i+1)th row, as shown in **FIG. 6A**. Gate signal lines of the (i+1)th row are not yet selected when initialization of the i-th row is performed, and are thus L level. The gate signal lines are at a fixed electric potential during a period when a gate signal line selection pulse is not being input, and therefore the gate signal lines of the (i+1)th row may be shared and also used as reset electric power source lines, as shown in **FIG. 6B**. Reset electric power source lines can therefore be omitted, similar to the structure of Embodiment Mode 8.

[0461] In this case it is necessary that the shared gate signal lines become L level in an unselected state. A TFT controlled by pulses input to the gate signal lines, namely a TFT **605**, is therefore an n-channel TFT.

[0462] It is possible to combine the structure of Embodiment Mode 9 with other embodiment modes. For example, it becomes possible to omit a reset electric power source line **911** by connecting a TFT **906** in accordance with Embodiment Mode 9 for cases in which an erasure gate signal line is added, and for other cases, as shown in **FIG. 9**, **FIG. 10**, and the like.

[0463] Further, if a capacitive means **609** is formed in order to store an image signal, it may be formed between a gate electrode of a TFT **608** and a position at which a fixed electric potential can be obtained, such as an electric current supply line **611**. Furthermore, the capacitive means **609** may also be formed between a second electrode of the TFT **605** and a fixed electric potential, such as the electric current supply line **611**, and the capacitive means **609** may also be formed in both locations if it is desired to make the storage capacitance value larger.

[0464] Embodiment Mode 10

[0465] **FIG. 7A** shows a structure in which a portion of the connections in the structure disclosed by Embodiment Mode 1 is changed, similar to Embodiment Mode 9. In contrast to Embodiment Mode 1, in which the second electrode of the TFT **106** is connected to the reset electric power source line **111**, as shown in **FIG. 1**, the connection is made to a second electrode of a TFT **704** in Embodiment Mode 10. Further, if a capacitive means **708** is formed in order to store an image signal, it may be formed between a gate electrode of a TFT **707** and a position at which a fixed electric potential can be obtained, such as an electric current supply line **710**. Furthermore, the capacitive means **708** may also be formed between the second electrode of the TFT **704** and a fixed electric potential, such as the electric current supply line **710**, and the capacitive means **708** may also be formed in both locations if it is desired to make the storage capacitance value larger.

[0466] Operation is explained using **FIGS. 7B** to 7E. **FIGS. 7B** to 7D show circuit operation from initialization to light emission, and **FIG. 7E** is a diagram showing the electric potentials of a first gate signal line **702**, a second gate signal line **703**, and a source signal line **701**. A period denoted by reference symbol i in **FIG. 7E** is for initialization (**FIG. 7B**), a period denoted by reference symbol ii is for input of an image signal (**FIG. 7C**), and a period denoted by reference symbol iii is a light emitting period (**FIG. 7D**).

[0467] First, the first gate signal line **702** and the second gate signal line **703** become H level, and the TFT **704** and a TFT **706** turn on. The electric potential of the source signal line **701** at this point is set to VReset as shown in **FIG. 7E**. This electric potential is set to an electric potential lower than the image signal by the amount of the threshold value of a TFT **705**, or to an even lower electric potential. The electric potentials of a gate electrode of the TFT **705** and the gate electrode of the **707** thus become lower, as shown in **FIG.** 7B, and the TFT **707** turns on at the point where the electric potentials exceed the threshold value of the TFT **707**. As is clear from **FIG.** 7B, the voltage between the gate and the source of the TFT **705** becomes zero, and therefore the TFT **705** turns off.

[0468] The second gate signal line **703** then becomes L level, the TFT **706** turns off, the electric potential of the source signal line becomes VData from VReset, and input of the image signal begins. $VReset+|Vth|<VData$ here, and therefore the voltage between the gate and the source of the TFT **705** exceeds the threshold value of the TFT **705**, which turns on. The image signal, to which the threshold value is added, is therefore applied to the gate electrode of the TFT **707** as shown in **FIG. 7C**.

[0469] The first gate signal line **702** then becomes L level, the TFT **704** turns off, and operation moves to the light emitting period. The image signal VData, to which the threshold value is added, is applied to the gate electrode of the TFT **707** at this point, and electric current corresponding to the image signal plus the threshold value is supplied to an EL device **709**, and the EL device **709** emits light.

[0470] Further, although a second electrode of the TFT **706** is connected to the second electrode of the TFT **704** here, operations at a similar timing are also possible if the second electrode of the TFT **706** is connected to the source signal line **701**, or between the gate electrode of the TFT **707** and the source signal line.

[0471] Embodiment Mode 11

[0472] A capacitive means for storing an image signal may be used in the present invention, as discussed above. The arrangement examples of capacitive means are disclosed in Embodiment Mode 1 and the like. The capacitive means may be formed between a TFT **804** and a fixed electric potential such as an electric current supply line **810**, in order to store the electric potential of the source of the TFT **805**, as shown in **FIG. 8A**. The capacitive means may also be formed between a gate electrode of a TFT **807**, and a fixed electric potential such as the electric current supply line **810**, as shown in **FIG.** 8B, in order to store the electric potential of the gate electrode of the TFT **807**. Note that the connecting point for the capacitive means is not limited to the electric current supply line. An electric potential can be stored if the capacitive means is connected to a node possessing a fixed electric potential, and therefore any location may be used.

[0473] Embodiments

[0474] Embodiments of the present invention are discussed below.

[0475] Embodiment 1

[0476] In this embodiment, the configuration of a light emitting device in which analogue video signals are used for video signals for display will be described. **FIG. 24A** depicts the exemplary configuration of the light emitting device. The device has a pixel part **2402** where a plurality of pixels is arranged in a matrix shape over a substrate **2401**, and it has a source signal line drive circuit **2403** and first and second gate signal line drive circuits **2404** and **2405** around the pixel part. In **FIG. 24**A, two gate signal line drive circuits are used to control a first and a second gate signal line in the pixel shown in **FIG. 1**, respectively.

[0477] Signals inputted to the source signal line drive circuit **2403**, and the first and second gate signal line drive circuits **2404** and **2405** are fed from outside through a flexible printed circuit (FPC) **2406**.

[0478] **FIG. 24B** depicts the exemplary configuration of the source signal line drive circuit.

[0479] This is the source signal line drive circuit for using analogue video signals for video signals for display, which has a shift register **2411**, a buffer **2412**, and a sampling circuit **2413**. Not shown particularly, but a level shifter may be added as necessary.

[0480] The operation of the source signal line drive circuit will be described. **FIG. 25A** shows the more detailed configuration, thus referring to the drawing.

[0481] A shift register **2501** is formed of a plurality of flip-flop circuits (FF) **2502**, to which the clock signal (S-CLK), the clock inverted signal (S-CLKb), and the start pulse (S-SP) are inputted. In response to the timing of these signals, sampling pulses are outputted sequentially.

[0482] The sampling pulses outputted from the shift register **2501** are passed through a buffer **2503** and amplified, and then inputted to a sampling circuit. The sampling circuit **2504** is formed of a plurality of sampling switches (SW) **2505**, which samples video signals in a certain column in accordance with the timing of inputting the sampling pulses. More specifically, when the sampling pulses are inputted to the sampling switches, the sampling switches **2505** are turned on. The potential held by the. video signals at this time is outputted to the separate source signal lines through the sampling switches.

[0483] Subsequently, the operation of the gate signal line drive circuit will be described. **FIG. 25B** depicts the more detailed exemplary configuration of the first and second gate signal line drive circuits **2404** and **2405** shown in **FIG. 24A**. The first gate signal line drive circuit has a shift register circuit **2511**, and a buffer **2512**, which is driven in response to the clock signal (G-CLK**1**), the clock inverted signal (G-CLKb**1**), and the start pulse (G-SP**1**). The second gate signal line drive circuit **2505** may also be configured similarly. In addition, in **FIG. 24**A, although the first and second gate signal line drive circuits are arranged symmetrically via the pixel part **2402** therebetween, they may be arranged in parallel to the same direction.

[0484] The operation from the shift register to the buffer is the same as that in the source signal line drive circuit. The sampling pulses amplified by the buffer select separate gate signal lines for them. The first gate signal line drive circuit sequentially selects first gate signal lines G**11**, G**21**, . . . and Gm**1**, and the second gate signal line drive circuit sequentially selects second gate signal lines G**12**, G**22**, . . . and Gm**2**. A third gate signal line drive circuit, not shown, is also the same as the first and second gate signal line drive circuits, sequentially selecting third gate signal lines G**13**, G**23**, . . . and Gm**3**. In the selected row, video signals are written in the pixel to emit light according to the procedures described in the embodiments.

[0485] In addition, as one example of the shift register, that formed of a plurality of D flip-flops is shown here. However, such the configuration is acceptable that signal lines can be selected by a decoder.

[0486] Embodiment 2

[0487] In this embodiment, the configuration of a light emitting device in which digital video signals are used for video signals for display will be described. **FIG. 26A** depicts the exemplary configuration of a light emitting device. The device has a pixel part **2602** where a plurality of pixels is arranged in a matrix shape over a substrate **2601**, and it has a source signal line drive circuit **2603**, and first and second gate signal line circuits **2604** and **2605** around the pixel part. In **FIG. 26**A, two gate signal line drive circuits are used to control the first and second gate signal lines in the pixel shown in **FIG. 1**, respectively.

[0488] Signals inputted to the source signal line drive circuit **2603**, and the first and second gate signal line drive circuits **2604** and **2605** are fed from outside through a flexible printed circuit (FPC) **2606**.

[0489] **FIG. 26B** depicts the exemplary configuration of the source signal line drive circuit. This is the source signal line drive circuit for using digital video signals for video signals for display, which has a shift register **2611**, a first latch circuit **2612**, a second latch circuit **2613**, and a D/A converter circuit **2614**. Not shown in the drawing particularly, but a level shifter may be added as necessary.

[0490] The first and second gate signal line drive circuits **2604** and **2605** are fine to be those shown in the embodiment 11, thus omitting the illustration and description here.

[0491] The operation of the source signal line drive circuit will be described. **FIG. 27A** shows the more detailed configuration, thus referring to the drawing.

[0492] A shift register **2701** is formed of a plurality of flip-flop circuits (FF) **2710**, to which the clock signal (S-CLK), the clock inverted signal (S-CLKb), and the start pulse (S-SP) are inputted. Sampling pulses are sequentially outputted in response to the timing of these signals.

[0493] The sampling pulses outputted from the shift register **2701** are inputted to first latch circuits **2702**. Digital video signals are being inputted to the first latch circuits **2702**. The digital video signals are held at each stage in response to the timing of inputting the sampling pulses. Here, the digital video signals are inputted by three bits. The video signals at each bit are held in the separate first latch circuits. Here, three first latch circuits are operated in parallel by one sampling pulse.

[0494] When the first latch circuits **2702** finish to hold the digital video signals up to the last stage, latch pulses are inputted to second latch circuits **2703** during the horizontal retrace period, and the digital video signals held in the first latch circuits **2702** are transferred to the second latch circuits **2703** all at once. After that, the digital video signals held in the second latch circuits **1903** for one row are inputted to D/A converter circuits **2704** simultaneously.

[0495] While the digital video signals held in the second latch circuits **2703** are being inputted to the D/A converter circuits **2704**, the shift register **2701** again outputs sampling pulses. Subsequent to this, the operation is repeated to process the video signals for one frame.

[0496] The D/A converter circuits **2704** convert the inputted digital video signals from digital to analogue and output them to the source signal lines as the video signals having the analogue voltage.

[0497] The operation described above is conducted throughout the stages during one horizontal period. Accordingly, the video signals are outputted to the entire source signal lines.

[0498] In addition, as described in the embodiment 11, such the configuration is acceptable that a decoder is used instead of the shift register to select signal lines.

[0499] Embodiment 3

[0500] In the embodiment 2, digital video signals are converted from digital to analogue by the D/A converter circuits and are written in the pixels. The light emitting device of the invention can also express gray scales by the time gray scale system. In this case, the D/A converter circuits are not needed as shown in **FIG. 27**B, and gray scales are controlled over the expression by the length of time that the EL device is emitting light for a long tome or short time. Thus, the video signals of each bit do not need to undergo parallel processing. Therefore, both the first and second latch circuits are fine for one bit. At this time, the digital video signals of each bit are serially inputted, sequentially held in the latch circuits and written in the pixels. Of course, it is acceptable that latch circuits for necessary bits are arranged in parallel.

[0501] Embodiment 4

[0502] In this specification, a substrate in which a driver circuit including a CMOS circuit and a pixel part having a switching TFT and a drive TFT are formed on the same substrate is called an active matrix substrate as a matter of convenience. In addition, in this embodiment, a process of manufacturing the active matrix substrate will be described using **FIGS. 13A** to **13**D and **14**A to **14**D.

[0503] A quartz substrate, a silicon substrate, a metallic substrate, or a stainless substrate, in which an insulating film is formed on the surface thereof is used as a substrate **5000**. In addition, a plastic substrate having a heat resistance, which is resistant to a processing temperature in this manufacturing process may be used. In this embodiment, the substrate **5000** made of glass such as barium borosilicate glass or aluminoborosilicate glass is used.

[0504] Next, a base film **5001** made from an insulating film such as a silicon oxide film, a silicon nitride film, or a silicon oxynitride film is formed on the substrate **5000**. In this embodiment, a two-layer structure is used for the base film **5001**. However, a single layer structure of the insulating film or a structure in which two layers or more of the insulating film are laminated may be used.

[0505] In this embodiment, as a first layer of the base film **5001**, a silicon oxynitride film **5001***a* is formed at a thickness of 10 nm to 200 nm (preferably, 50 nm to 100 nm) by a plasma CVD method using SiH4, NH3, and N2O as reactive gases. In this embodiment, the silicon oxynitride film **5001***a* is formed at a thickness of 50 nm. Next, as a second layer of the base film **5001**, a silicon oxynitride film **5001***b* is formed at a thickness of 50 nm to 200 nm (preferably, 100 nm to 150 nm) by a plasma CVD method using SiH4 and N2O as reactive gases. In this embodiment, the silicon oxynitride film **5001***b* is formed at a thickness of 100 nm.

[0506] Subsequently, semiconductor layers **5002** to **5005** are formed on the base film **5001**. The semiconductor layers **5002** to **5005** are formed as follows. That is, a semiconductor film is formed at a thickness of 25 nm to 80 nm (preferably, 30 nm to 60 nm) by known means (such as a sputtering method, an LPCVD method, or a plasma CVD method). Next, the semiconductor film is crystallized by a known crystallization method (such as a laser crystallization method, a thermal crystallization method using RTA or a furnace anneal furnace, a thermal crystallization method using a metallic element for promoting crystallization, or the like). Then, the obtained crystalline semiconductor film is patterned in a predetermined shape to form the semiconductor layers **5002** to **5005**. Note that an amorphous semiconductor film, a micro-crystalline semiconductor film, a crystalline semiconductor film, a compound semiconductor film having an amorphous structure such as an amorphous silicon germanium film, or the like may be used as the semiconductor film.

[0507] In this embodiment, an amorphous silicon film having a film thickness of 55 nm is formed by a plasma CVD method. A solution containing nickel is held on the amorphous silicon film and it is dehydrogenated at 500° C. for 1 hour, and then thermal crystallization is conducted at 550° C. for 4 hours to form a crystalline silicon film. After that, patterning processing using a photolithography method is performed to form the semiconductor layers **5002** to **5005**.

[0508] Note that, when the crystalline semiconductor film is formed by a laser crystallization method, a gas laser or a solid laser, which conducts continuous oscillation or pulse oscillation is preferably used as the laser. An excimer laser, a YAG laser, a YVO4 laser, a YLF laser, a YAlO3 laser, a glass laser, a ruby laser, a Ti: sapphire laser, and the like can be used as the former gas laser. In addition, a laser using a crystal such as YAG YVO4, YLF or YAlO3, which is doped with Cr, Nd, Er, Ho, Ce, Co, Ti, or Tm can be used as the latter solid laser. The fundamental of the laser is changed according to a doping material and laser light having a fundamental of the neighborhood of 1 μm is obtained. A harmonic to the fundamental can be obtained by using a non-linear optical device. Note that, in order to obtain a crystal having a large grain size at the crystallization of the amorphous semiconductor film, it is preferable that a solid laser capable of conducting continuous oscillation is used and a second harmonic to a fourth harmonic of the fundamental are applied. Typically, a second harmonic (532 nm)

or a third harmonic (355 nm) of an Nd: YVO4 laser (fundamental of 1064 nm) is applied.

[0509] Also, laser light emitted from the continuous oscillation YVO4 laser having an output of 10 W is converted into a harmonic by a non-linear optical device. Further, there is a method of locating an YVO4 crystal and a nonlinear optical device in a resonator and emitting a harmonic. Preferably, laser light having a rectangular shape or an elliptical shape is formed on an irradiation surface by an optical system and irradiated to an object to be processed. At this time, an energy density of about 0.01 MW/cm2 to 100 MW/cm2 (preferably, 0.1 MW/cm2 to 10 MW/cm2) is required. The semiconductor film is moved relatively to the laser light at a speed of about 10 cm/s to 2000 cm/s to be irradiated with the laser light.

[0510] Also, when the above laser is used, it is preferable that a laser beam emitted from a laser oscillator is linearly condensed by an optical system and irradiated to the semiconductor film. A crystallization condition is set as appropriate. When an excimer laser is used, it is preferable that a pulse oscillation frequency is set to 300 Hz and a laser energy density is set to 100 mJ/cm2 to 700 mJ/cm2 (typically, 200 mJ/cm2 to 300 mJ/cm2). In addition, when a YAG laser is used, it is preferable that the second harmonic is used, a pulse oscillation frequency is set to 1 Hz to 300 Hz, and a laser energy density is set to 300 mJ/cm2 to 1000 mJ/cm2 (typically, 350 mJ/cm2 to 500 mJ/cm2). A laser beam linearly condensed at a width of 100 μm to 1000 μm (preferably, 400 μm) is irradiated over the entire surface of the substrate. At this time, an overlap ratio with respect to the linear beam may be set to 50% to 98%.

[0511] However, in this embodiment, the amorphous silicon film is crystallized using a metallic element for promoting crystallization so that the metallic element remains in the crystalline silicon film. Thus, an amorphous silicon film having a thickness of 50 nm to 100 nm is formed on the crystalline silicon film, heat treatment (thermal anneal using an RTA method or a furnace anneal furnace) is conducted to diffuse the metallic element into the amorphous silicon film, and the amorphous silicon film is removed by etching after the heat treatment. As a result, the metallic element contained in the crystalline silicon film can be reduced or removed.

[0512] Note that, after the formation of the semiconductor layers **5002** to **5005**, doping with a trace impurity element (boron or phosphorus) may be conducted in order to control a threshold value of a TFT.

[0513] Next, a gate insulating film **5006** covering the semiconductor layers **5002** to **5005** is formed. The gate insulating film **5006** is formed from an insulating film containing silicon at a film thickness of 40 nm to 150 nm by a plasma CVD method or a sputtering method. In this embodiment, a silicon oxynitride film is formed as the gate insulating film **5006** at a thickness of 115 nm by the plasma CVD method. Of course, the gate insulating film **5006** is not limited to the silicon oxynitride film. Another insulating film containing silicon may be used as a single layer or a laminate structure.

[0514] Note that, when a silicon oxide film is used as the gate insulating film **5006**, a plasma CVD method is employed, TEOS (tetraethyl orthosilicate) and O2 are mixed, a reactive pressure is set to 40 Pa, and a substrate temperature is set to 300° C. to 400° C. Then, discharge may occur at a high frequency (13.56 MHz) power density of 0.5 W/cm2 to 0.8 W/cm2 to form the silicon oxide film. After that, when thermal anneal is conducted for the silicon oxide film formed by the above steps at 400° C. to 500° C., a preferable property as to the gate insulating film **5006** can be obtained.

[0515] Next, a first conductive film **5007** having a film thickness of 20 nm to 100 nm and a second conductive film **5008** having a film thickness of 100 nm to 400 nm are laminated on the gate insulating film **5006**. In this embodiment, the first conductive film **5007** which has the film thickness of 30 nm and is made from a TaN film and the second conductive film **5008** which has the film thickness of 370 nm and is made from a W film are laminated.

[0516] In this embodiment, the TaN film as the first conductive film **5007** is formed by a sputtering method using Ta as a target in an atmosphere containing nitrogen. The W film as the second conductive film **5008** is formed by a sputtering method using W as a target. In addition, it can be formed by a thermal CVD method using tungsten hexafluoride (WF6). In any case, when they are used for a gate electrode, it is necessary to reduce a resistance, and it is desirable that a resistivity of the W film is set to 20 $\mu\Omega$cm or lower. When a crystal grain is enlarged, the resistivity of the W film can be reduced. However, if a large number of impurity elements such as oxygen exist in the W film, the crystallization is suppressed so that the resistance is increased. Therefore, in this embodiment, the W film is formed by a sputtering method using high purity W (purity of 99.9999%) as a target while taking into a consideration that an impurity does not enter the film from a gas phase at film formation. Thus, a resistively of 9 $\mu\Omega$cm to 20 $\mu\Omega$cm can be realized.

[0517] Note that, in this embodiment, the TaN film is used as the first conductive film **5007** and the W film is used as the second conductive film **5008**. However, materials which compose the first conductive film **5007** and the second conductive film **5008** are not particularly limited. The first conductive film **5007** and the second conductive film **5008** each may be formed from an element selected from Ta, W, Ti, Mo, Al, Cu, Cr, and Nd, or an alloy material or a compound material, which contains mainly the above element. In addition, they may be formed from a semiconductor film which is represented by a polycrystalline silicon film doped with an impurity element such as phosphorus, or an AgPdCu alloy.

[0518] Next, a mask **5009** made of a resist is formed by using a photolithography method and first etching processing for forming electrodes and wirings is performed. The first etching processing is performed under a first etching condition and a second etching condition (**FIG. 13B**).

[0519] In this embodiment, as the first etching condition, an ICP (inductively coupled plasma) etching method is used. In addition, CF4, Cl2, and O2 are used as etching gases and a ratio of respective gas flow rates is set to 25:25:10 (sccm). RF power having 500 W and 13.56 MHz is supplied to a coil type electrode at a pressure of 1.0 Pa to produce plasma, thereby conducting etching. RF power having 150 W and 13.56 MHz is supplied to a substrate side (sample stage) to apply a substantially negative self bias voltage thereto. The

W film is etched under this first etching condition so that end portions of the first conductive layer **5007** are made to have taper shapes.

[**0520**] Subsequently, the etching condition is changed to the second etching condition without removing the mask **5009** made of a resist. CF4 and Cl2 are used as etching gases and a ratio of respective gas flow rates is set to 30:30 (sccm). RF power having 500 W and 13.56 MHz is supplied to a coil type electrode at a pressure of 1.0 Pa to produce plasma, thereby conducting etching for about 15 seconds. RF power having 20 W and 13.56 MHz is supplied to a substrate side (sample stage) to apply a substantially negative self bias voltage thereto. In the second etching condition, both the first conductive film **5007** and the second conductive film **5008** are etched to the same degree. Note that, in order to conduct etching without leaving the residue on the gate insulating film **5006**, it is preferable that an etching time is increased at a rate of about 10 to 20%.

[**0521**] In the above first etching processing, when a shape of the mask made of a resist is made suitable, the end portions of the first conductive film **5007** and the end portions of the second conductive film **5008** become taper shapes by an effect of the bias voltage applied to the substrate side. Thus, first-shaped conductive layers **5010** to **5014** made from the first conductive layer **5007** and the second conductive layer **5008** are formed by the first etching processing. With respect to the insulating film **5006**, regions which are not covered with the first-shaped conductive layers **5010** to **5014** are etched by about 20 nm to 50 nm so that thinner regions are formed.

[**0522**] Next, second etching processing is performed without removing the mask **5009** made of a resist (**FIG. 13C**). In the second etching processing, SF6, Cl2, and O2 are used as etching gases and a ratio of respective gas flow rates is set to 24:12:24 (seem). RF power having 700 W and 13.56 MHz is supplied to a coil type electrode at a pressure of 1.3 Pa to produce plasma, thereby conducting etching for about 25 seconds. RF power having 10 W and 13.56 MHz is supplied to a substrate side (sample stage) to apply a substantially negative self bias voltage thereto. Thus, the W film is selectively etched to form second-shaped conductive layers **5015** to **5019**. At this time, first conductive layers **5015***a* to **5019***a* are hardly etched.

[**0523**] Then, first doping processing is performed without removing the mask **5009** made of a resist to add an impurity element for providing an N-type to the semiconductor layers **5002** to **5005** at a low concentration. The first doping processing is preferably performed by an ion doping method or an ion implantation method. With respect to a condition of the ion doping method, a dose is set to 1×1013 atoms/cm2 to 5×1014 atoms/cm2 and an accelerating voltage is set to 40 keV to 80 keV. In this embodiment, a dose is set to 5.0×1013 atoms/cm2 and an accelerating voltage is set to 50 keV. As the impurity element for providing an N-type, an element which belongs to Group 15 is preferably used, and typically, phosphorus (P) or arsenic (As) is used. In this embodiment, phosphorus (P) is used. In this case, the second-shaped conductive layers **5015** to **5019** become masks to the impurity element for providing an N-type. Thus, first impurity regions (N−−regions) **5020** to **5023** are formed in a self alignment. Then, the impurity element for providing an N-type is added to the first impurity regions **5020** to **5023** at a concentration range of 1×1018 atoms/cm3 to 1×1020 atoms/cm3.

[**0524**] Subsequently, after the mask **5009** made of a resist is removed, a new mask **5024** made of a resist is formed and second doping processing is performed at a higher accelerating voltage than that in the first doping processing. In a condition of an ion doping method, a dose is set to 1×1013 atoms/cm2 to 3×1015 atoms/cm2 and an accelerating voltage is set to 60 keV to 120 keV. In this embodiment, a dose is set to 3.0×1015 atoms/cm2 and an accelerating voltage is set to 65 keV. In the second doping processing, second conductive layers **5015***b* to **5018***b* are used as masks to an impurity element and doping is conducted such that the impurity element is added to the semiconductor layers located under the taper portions of the first conductive layers **5015***a* to **5018***a*.

[**0525**] As a result of the above second doping processing, the impurity element for providing an N-type is added to second impurity regions (N− regions; Lov regions) **5026** overlapped with the first conductive layers at a concentration range of 1×1018 atoms/cm3 to 5×1019 atoms/cm3. In addition, the impurity element for providing an N-type is added to third impurity regions (N+ regions) **5025** and **5028** at a concentration range of 1×1019 atoms/cm3 to 5×1021 atoms/cm3. After the first and second doping processing, regions to which no impurity element is added or regions to which the trace impurity element is added are formed in the semiconductor layers **5002** to **5005**. In this embodiment, the regions to which the impurity element is not completely added or the regions to which the trace impurity element is added are called channel regions **5027** and **5030**. In addition, there are, of the first impurity regions (N−−regions) **5020** to **5023** formed by the above first doping processing, regions covered with the resist **5024** in the second doping processing. In this embodiment, they are continuously called first impurity regions (N−−regions; LDD regions) **5029**.

[**0526**] Note that, in this embodiment, the second impurity regions (N− regions) **5026** and the third impurity regions (N+ regions) **5025** and **5028** are formed by only the second doping processing. However, the present invention is not limited to this. A condition for doping processing may be changed as appropriate and doping processing may be performed plural times to form those regions.

[**0527**] Next, as shown in **FIG. 14**A, after the mask **5024** made of a resist is removed, a new mask **5031** made of a resist is formed. After that, third doping processing is performed. By the third doping processing, fourth impurity regions (P+ regions) **5032** and **5034** and fifth impurity regions (P− regions) **5033** and **5035** to which an impurity element for providing a conductivity type reverse to the above first conductivity type is added are formed in the semiconductor layers as active layers of P-channel TFTs.

[**0528**] In the third doping processing, the second conductive layers **5016***b* and **5018***b* are used as masks to the impurity element. Thus, the impurity element for providing a P-type is added to form the fourth impurity regions (P+ regions) **5032** and **5034** and the fifth impurity regions (P− regions) **5033** and **5035** in a self alignment.

[**0529**] In this embodiment, the fourth impurity regions **5032** and **5034** and the fifth impurity regions **5033** and **5035**

are formed by an ion doping method using diborane (B2H6). In a condition of the ion doping method, a dose is set to 1×1016 atoms/cm2 and an accelerating voltage is set to 80 keV.

[0530] Note that, in the third doping processing, the semiconductor layers composing N-channel TFTs are covered with the masks **5031** made of a resist.

[0531] Here, by the first and second doping processing, phosphorus is added to the fourth impurity regions (P+ regions) **5032** and **5034** and the fifth impurity regions (P− regions) **5033** and **5035** at different concentrations. In the third doping processing, doping processing is conducted such that a concentration of the impurity element for providing a P-type is 1×1019 atoms/cm3 to 5×1021 atoms/cm3 in any region of the fourth impurity regions (P+regions) **5032** and **5034** and the fifth impurity regions (P− regions) **5033** and **5035**. Thus, the fourth impurity regions (P+ regions) **5032** and **5034** and the fifth impurity regions (P− regions) **5033** and **5035** serve as the source regions and the drain regions of the P-channel TFTs without causing a problem.

[0532] Note that, in this embodiment, the fourth impurity regions (P+ regions) **5032** and **5034** and the fifth impurity regions (P− regions) **5033** and **5035** are formed by only the third doping processing. However, the present invention is not limited to this. A condition for doping processing may be changed as appropriate and doping processing may be performed plural times to form those regions.

[0533] Next, as shown in **FIG. 14**B, the mask **5031** made of a resist is removed and a first interlayer insulating film **5036** is formed. An insulating film containing silicon is formed as the first interlayer insulating film **5036** at a thickness of 100 nm to 200 nm by a plasma CVD method or a sputtering method. In this embodiment, a silicon oxynitride film is formed at a film thickness of 100 nm by plasma CVD method. Of course, the first interlayer insulating film **5036** is not limited to the silicon oxynitride film, and therefore another insulating film containing silicon may be used as a single layer or a laminate structure.

[0534] Next, as shown in **FIG. 14**C, heat treatment is performed for the recovery of crystallinity of the semiconductor layers and the activation of the impurity element added to the semiconductor layers. This heat treatment is performed by a thermal anneal method using a furnace anneal furnace. The thermal anneal method is preferably conducted in a nitrogen atmosphere in which an oxygen concentration is 1 ppm or less, preferably, 0.1 ppm or less at 400° C. to 700° C. In this embodiment, the heat treatment at 410° C. for 1 hour is performed for the activation processing. Note that a laser anneal method or a rapid thermal anneal method (RTA method) can be applied in addition to the thermal anneal method.

[0535] Also, the heat treatment may be performed before the formation of the first interlayer insulating film **5036**. However, if materials which compose the first conductive layers **5015***a* to **5019***a* and the second conductive layers **5015***b* to **5019***b* are sensitive to heat, it is preferable that heat treatment is performed after the first interlayer insulating film **5036** (insulating film containing mainly silicon, for example, silicon nitride film) for protecting a wiring and the like is formed as in this embodiment.

[0536] As described above, when the heat treatment is performed after the formation of the first interlayer insulating film **5036** (insulating film containing mainly silicon, for example, silicon nitride film), the hydrogenation of the semiconductor layer can be also conducted simultaneously with the activation processing. In the hydrogenation step, a dangling bond of the semiconductor layer is terminated by hydrogen contained in the first interlayer insulating film **5036**.

[0537] Note that heat treatment for hydrogenation which is different from the heat treatment for activation processing may be performed.

[0538] Here, the semiconductor layer can be hydrogenated regardless of the presence or absence of the first interlayer insulating film **5036**. As another means for hydrogenation, means for using hydrogen excited by plasma (plasma hydrogenation) or means for performing heat treatment in an atmosphere containing hydrogen of 3% to 100% at 300° C. to 450° C. for 1 hour to 12 hours may be used.

[0539] Next, a second interlayer insulating film **5037** is formed on the first interlayer insulating film **5036**. An inorganic insulating film can be used as the second interlayer insulating film **5037**. For example, a silicon oxide film formed by a CVD method, a silicon oxide film applied by an SOG (spin on glass) method, or the like can be used. In addition, an organic insulating film can be used as the second interlayer insulating film **5037**. For example, a film made of polyimide, polyamide, BCB (benzocyclobutene), acrylic, or the like can be used. Further, a laminate structure of an acrylic film and a silicon oxide film may be used.

[0540] In this embodiment, an acrylic film having a film thickness of 1.6 μm is formed. When the second interlayer insulating film **5037** is formed, unevenness caused by TFTs formed on the substrate **5000** is reduced and the surface can be leveled. In particular, the second interlayer insulating film **5037** has a strong sense of leveling. Thus, a film having superior evenness is preferable.

[0541] Next, using dry etching or wet etching, the second interlayer insulating film **5037**, the first interlayer insulating film **5036**, and the gate insulating film **5006** are etched to form contact holes which reach the third impurity regions **5025** and **5028** and the fourth impurity regions **5032** and **5034**.

[0542] Next, a pixel electrode **5038** made from a transparent conductive film is formed. A compound of indium oxide and tin oxide (indium tin oxide: ITO), a compound of indium oxide and zinc oxide, zinc oxide, tin oxide, indium oxide, or the like can be used for the transparent conductive film. In addition, the transparent conductive film to which gallium is added may be used. The pixel electrode corresponds to the anode of an EL device.

[0543] In this embodiment, an ITO film is formed at a thickness of 110 nm and then patterned to form the pixel electrode **5038**.

[0544] Next, wirings **5039** to **5045** electrically connected with the respective impurity regions are formed. Note that, in this embodiment, a Ti film having a film thickness of 100 nm, an Al film having a film thickness of 350 nm, and a Ti film having a film thickness of 100 nm are formed into a laminate in succession by a sputtering method and a result-

ant laminate film is patterned in a predetermined shape so that the wirings **5039** to **5045** are formed.

[**0545**] Of course, they are not limited to a three-layer structure. A single layer structure, a two-layer structure, or a laminate structure composed of four layers or more may be used. Materials of the wirings are not limited to Al and Ti, and therefore other conductive films may be used. For example, an Al film or a Cu film is formed on a TaN film, a Ti film is formed thereon, and then a resultant laminate film is patterned to form the wirings.

[**0546**] Thus, one of the source and the drain of an N-channel TFT in a pixel part is electrically connected with a source signal line (laminate of **5019***a* and **5019***b*) through the wiring **5042** and the other is electrically connected with the gate electrode of a P-channel TFT in the pixel part through the wiring **5043**. In addition, one of the source and the drain of the P-channel TFT in the pixel part is electrically connected with a pixel electrode **5038** through the wiring **5044**. Here, a portion on the pixel electrode **5038** and a portion of the wiring **5044** are overlapped with each other so that electrical connection between the wiring **5044** and the pixel electrode **5038** is produced.

[**0547**] By the above steps, as shown in **FIG. 14**D, the driver circuit portion including the CMOS circuit composed of the N-channel TFT and the P-channel TFT and the pixel part including the switching TFT and the drive TFT can be formed on the same substrate.

[**0548**] The N-channel TFT in the driver circuit portion includes low concentration impurity regions **5026** (Lov regions) overlapped with the first conductive layer **5015***a* composing a portion of the gate electrode and high concentration impurity regions **5025** which each serve as the source region or the drain region. The P-channel TFT which is connected with the N-channel TFT through the wiring **5040** and composes the CMOS circuit includes low concentration impurity regions **5033** (Lov regions) overlapped with the first conductive layer **5016***a* composing a portion of the gate electrode and high concentration impurity regions **5032** which each serve as the source region or the drain region.

[**0549**] The N-channel switching TFT in the pixel part includes low concentration impurity regions **5029** (Loff regions) formed outside the gate electrode and high concentration impurity regions **5028** which each serve as the source region or the drain region. In addition, the P-channel drive TFT in the pixel part includes low concentration impurity regions **5035** (Lov regions) overlapped with the first conductive layer **5018***a* composing a portion of the gate electrode and high concentration impurity regions **5034** which each serve as the source region or the drain region.

[**0550**] Next, a third interlayer insulating film **5046** is formed. An inorganic insulating film or an organic insulating film can be used as the third interlayer insulating film. A silicon oxide film formed by a CVD method, a silicon oxide film applied by an SOG (spin on glass) method, or the like can be used as the inorganic insulating film. In addition, an acrylic resin film or the like can be used as the organic insulating film.

[**0551**] Examples of a combination of the second interlayer insulating film **5037** and the third interlayer insulating film **5046** will be described below.

[**0552**] There is a combination in which a laminate film stacked by acrylic and a silicon oxynitride film formed by a sputtering method is used as the second interlayer insulating film **5037**, and a silicon oxynitride film formed by a sputtering method is used as the third interlayer insulating film **5046**. In addition, there is a combination in which a silicon oxide film formed by an SOG method is used as the second interlayer insulating film **5037** and a silicon oxide film formed by an SOG method is used as the third interlayer insulating film **5046**. In addition, there is a combination in which a laminate film of a silicon oxide film formed by an SOG method and a silicon oxide film formed by a plasma CVD method is used as the second interlayer insulating film **5037** and a silicon oxide film formed by a plasma CVD method is used as the third interlayer insulating film **5046**. In addition, there is a combination in which acrylic is used for the second interlayer insulating film **5037** and acrylic is used for the third interlayer insulating film **5046**. In addition, there is a combination in which a laminate film of an acrylic film and a silicon oxide film formed by a plasma CVD method is used as the second interlayer insulating film **5037** and a silicon oxide film formed by a plasma CVD method is used as the third interlayer insulating film **5046**. In addition, there is a combination in which a silicon oxide film formed by a plasma CVD method is used as the second interlayer insulating film **5037** and acrylic is used for the third interlayer insulating film **5046**.

[**0553**] An opening portion is formed at a position corresponding to the pixel electrode **5038** in the third interlayer insulating film **5046**. The third interlayer insulating film serves as a bank. When a wet etching method is used at the formation of the opening portion, it can be easily formed as a side wall having a taper shape. If the side wall of the opening portion is not sufficiently gentle, the deterioration of an EL layer by a step becomes a marked problem. Thus, attention is required.

[**0554**] A carbon particle or a metallic particle may be added into the third interlayer insulating film to reduce resistivity, thereby suppressing the generation of static electricity. At this time, the amount of carbon particle or metallic particle to be added is preferably adjusted such that the resistivity becomes 1×106 Ωm to 1×1012 Ωm (preferably, 1×108 Ωm to 1×1010 Ωm).

[**0555**] Next, an EL layer **5047** is formed on the pixel electrode **5038** exposed in the opening portion of the third interlayer insulating film **5046**.

[**0556**] An organic light emitting material or an inorganic light emitting material which are known can be used as the EL layer **5047**.

[**0557**] A low molecular weight based organic light emitting material, a high molecular weight based organic light emitting material, or a medium molecular weight based organic light emitting material can be freely used as the organic light emitting material. Note that in this specification, a medium molecular weight based organic light emitting material indicates an organic light emitting material which has no sublimation property and in which the number of molecules is 20 or less or a length of chained molecules is 10 μm or less.

[**0558**] The EL layer **5047** has generally a laminate structure. Typically, there is a laminate structure of "a hole

transporting layer, a light emitting layer, and an electron transporting layer". In addition to this, a structure in which "a hole injection layer, a hole transporting layer, a light emitting layer, and an electron transporting layer" or "a hole injection layer, a hole transporting layer, a light emitting layer, an electron transporting layer, and an electron injection layer" are laminated on an anode in this order may be used. A light emitting layer may be doped with fluorescent pigment or the like.

[**0559**] In this embodiment, the EL layer **5047** is formed by an evaporation method using a low molecular weight based organic light emitting material. Specifically, a laminate structure in which a copper phthalocyanine (CuPc) film having a thickness of 20 nm is provided as the hole injection layer and a tris-8-quinolinolato aluminum complex (Alq3) film having a thickness of 70 nm is provided thereon as the light emitting layer is used. A light emission color can be controlled by adding fluorescent pigment such as quinacridon, perylene, or DCM1 to Alq3.

[**0560**] Note that only one pixel is shown in **FIG. 14D**. However, a structure in which the EL layers **5047** corresponding to respective colors of, plural colors, for example, R (red), G (green), and B (blue) are separately formed can be used.

[**0561**] Also, as an example using the high molecular weight based organic light emitting material, the EL layer **5047** may be constructed by a laminate structure in which a polythiophene (PEDOT) film having a thickness of 20 nm is provided as the hole injection layer by a spin coating method and a paraphenylenevinylene (PPV) film having a thickness of about 100 nm is provided thereon as the light emitting layer. When π conjugated system polymer of PPV is used, a light emission wavelength from red to blue can be selected. In addition, an inorganic material such as silicon carbide can be used as the electron transporting layer and the electron injection layer.

[**0562**] Note that the EL layer **5047** is not limited to a layer having a laminate structure in which the hole injection layer, the hole transporting layer, the light emitting layer, the electron transporting layer, the electron injection layer, and the like are distinct. In other words, the EL layer **5047** may have a laminate structure with a layer in which materials composing the hole injection layer, the hole transporting layer, the light emitting layer, the electron transporting layer, the electron injection layer, and the like are mixed.

[**0563**] For example, the EL layer **5047** may have a structure in which a mixed layer composed of a material composing the electron transporting layer (hereinafter referred to as an electron transporting material) and a material composing the light emitting layer (hereinafter referred to as a light emitting material) is located between the electron transporting layer and the light emitting layer.

[**0564**] Next, a pixel electrode **5048** made from a conductive film is provided on the EL layer **5047**. In the case of this embodiment, an alloy film of aluminum and lithium is used as the conductive film. Of course, a known MgAg film (alloy film of magnesium and silver) may be used. The pixel electrode **5048** corresponds to the cathode of the EL device. A conductive film made of an element which belongs to Group 1 or Group 2 of the periodic table or a conductive film to which those elements are added can be freely used as a cathode material.

[**0565**] When the pixel electrode **5048** is formed, the EL device is completed. Note that the EL device indicates a device composed of the pixel electrode (anode) **5038**, the EL layer **5047**, and the pixel electrode (cathode) **5048**.

[**0566**] It is effective that a passivation film **5049** is provided to completely cover the EL device. A single layer of an insulating film such as a carbon film, a silicon nitride film, or a silicon oxynitride film, or a laminate layer of a combination thereof can be used as the passivation film **5049**.

[**0567**] It is preferable that a film having good coverage is used as the passivation film **5049**, and it is effective to use a carbon film, particularly, a DLC (diamond like carbon) film. The DLC film can be formed at a temperature range of from a room temperature to 100° C. Thus, a film can be easily formed over the EL layer **5047** having a low heat-resistance. In addition, the DLC film has a high blocking effect to oxygen so that the oxidization of the EL layer **5047** can be suppressed. Therefore, a problem in that the EL layer **5047** is oxidized can be prevented.

[**0568**] Note that, it is effective that steps up to the formation of the passivation film **5049** after the formation of the third interlayer insulating film **5046** are conducted in succession using a multi-chamber type (or in-line type) film formation apparatus without being exposed to air.

[**0569**] Note that, actually, when it is completed up to the state shown in **FIG. 14**D, in order not to be exposed to air, it is preferable that packaging (sealing) is conducted using a protective film (laminate film, ultraviolet curable resin film, or the like) or a transparent sealing member which has a high airtight property and low degassing. At this time, when an inner portion surrounded by the sealing member is made to an inert atmosphere or a hygroscopic material (for example, barium oxide) is located in the inner portion, the reliability of the EL device is improved.

[**0570**] Also, after an airtightnesslevel is increased by processing such as packaging, a connector (flexible printed circuit: FPC) for connecting terminals led from devices or circuits which are formed on the substrate **5000** with external signal terminals is attached so that it is completed as a product.

[**0571**] Also, according to the steps described in this embodiment, the number of photo masks required for manufacturing a semiconductor device can be reduced. As a result, the process is shortened and it can contribute to the reduction in manufacturing cost and the improvement of a yield.

[**0572**] Embodiment 5

[**0573**] In this embodiment, a process of manufacturing the active matrix substrate having a structure different from that described in Embodiment 4 will be described using **FIGS. 15A** to **15**D.

[**0574**] Note that, the steps up to the step shown in **FIG. 15A** are similar to those shown in **FIGS. 13A** to **13**D and **14**A in Embodiment 4. Note that it is different from Embodiment 4 at a point that a drive TFT composing a pixel part is an N-channel TFT having low concentration impurity regions (Loff regions) formed outside the gate electrode. With respect to the drive TFT, as described in Embodiment 4, the low concentration impurity regions (Loff regions) may be formed outside the gate electrode using a mask made of a resist.

[0575] Portions similar to **FIGS. 13A** to **13**D and **14**A to **14**D are indicated using the same symbols and the description is omitted here.

[0576] As shown in **FIG. 15A, a** first interlayer insulating film **5101** is formed. An insulating film containing silicon is formed as the first interlayer insulating film **5101** at a thickness of 100 nm to 200 nm by a plasma CVD method or a sputtering method. In this embodiment, a silicon oxynitride film having a film thickness of 100 nm is formed by a plasma CVD method. Of course, the first interlayer insulating film **5101** is not limited to the silicon oxynitride film, and therefore another insulating film containing silicon may be used as a single layer or a laminate structure.

[0577] Next, as shown in **FIG. 15**B, heat treatment (thermal processing) is performed for the recovery of crystallinity of the semiconductor layers and the activation of the impurity element added to the semiconductor layers. This heat treatment is performed by a thermal anneal method using a furnace anneal furnace. The thermal anneal method is preferably conducted in a nitrogen atmosphere in which an oxygen concentration is 1 ppm or less, preferably, 0.1 ppm or less at 400° C to 700° C. In this embodiment, the heat treatment at 410° C. for 1 hour is performed for the activation processing. However, if a laser anneal method or a rapid thermal anneal method (RTA method) can be applied in addition to the thermal anneal method.

[0578] Also, the heat treatment may be performed before the formation of the first interlayer insulating film **5101**. Note that, the first conductive layers **5015***a* to **5019***a* and the second conductive layers **5015***b* to **5019***b* are sensitive to heat, it is preferable that heat treatment is performed after the first interlayer insulating film **5101** (insulating film containing mainly silicon, for example, silicon nitride film) for protecting a wiring and the like is formed as in this embodiment.

[0579] As described above, when the heat treatment is performed after the formation of the first interlayer insulating film **5101** (insulating film containing mainly silicon, for example, silicon nitride film), the hydrogenation of the semiconductor layer can be also conducted simultaneously with the activation processing. In the hydrogenation step, a dangling bond of the semiconductor layer is terminated by hydrogen contained in the first interlayer insulating film **5101**.

[0580] Note that heat treatment for hydrogenation other than the heat treatment for activation processing may be performed.

[0581] Here, the semiconductor layer can be hydrogenated regardless of the presence or absence of the first interlayer insulating film **5101**. As another means for hydrogenation, means for using hydrogen excited by plasma (plasma hydrogenation) or means for performing heat treatment in an atmosphere containing hydrogen of 3% to 100% at 300° C. to 450° C. for 1 hour to 12 hours may be used.

[0582] By the above steps, the driver circuit portion including the CMOS circuit composed of the N-channel TFT and the P-channel TFT and the pixel part including the switching TFT and the drive TFT can be formed on the same substrate.

[0583] Next, a second interlayer insulating film **5102** is formed on the first interlayer insulating film **5101**. An inorganic insulating film can be used as the second interlayer insulating film **5102**. For example, a silicon oxide film formed by a CVD method, a silicon oxide film applied by an SOG (spin on glass) method, or the like can be used. In addition, an organic insulating film can be used as the second interlayer insulating film **5102**. For example, a film made of polyimide, polyamide, BCB (benzocyclobutene), acrylic, or the like can be used. Further, a laminate structure of an acrylic film and a silicon oxide film may be used. Still further, a laminate structure of an acrylic film and a silicon oxynitride film formed by a sputtering method may be used.

[0584] Next, using dry etching or wet etching, the first interlayer insulating film **5101**, the second interlayer insulating film **5102**, and the gate insulating film **5006** are etched to form contact holes which reach impurity regions (third impurity regions (N+ regions) and fourth impurity regions (P+ regions)) of respective TFTs which compose the driver circuit portion and the pixel part.

[0585] Next, wirings **5103** to **5109** electrically connected with the respective impurity regions are formed. Note that, in this embodiment, a Ti film having a film thickness of 100 nm, an Al film having a film thickness of 350 nm, and a Ti film having a film thickness of 100 nm are formed in succession by a sputtering method and a resultant laminate film is patterned in a predetermined shape so that the wirings **5103** to **5109** are formed.

[0586] Of course, they are not limited to a three-layer structure. A single layer structure, a two-layer structure, or a laminate structure composed of four layers or more may be used. Materials of the wirings are not limited to Al and Ti, and therefore other conductive films may be used. For example, it is preferable that an Al film or a Cu film is formed on a TaN film, a Ti film is formed thereon, and then a resultant laminate film is patterned to form the wirings.

[0587] One of the source region and the drain region of a switching TFT in a pixel part is electrically connected with a source signal line (laminate of **5019***a* and **5019***b*) through the wiring **5106** and the other is electrically connected with the gate electrode of a drive TFT in the pixel part through the wiring **5107**.

[0588] Next, as shown in **FIG. 15C, a** third interlayer insulating film **5110** is formed. An inorganic insulating film or an organic insulating film can be used as the third interlayer insulating film **5110**. A silicon oxide film formed by a CVD method, a silicon oxide film applied by an SOG (spin on glass) method, or the like can be used as the inorganic insulating film. In addition, as the organic insulating film, used may be an acrylic resin film or the like, and, may be a laminate structure of an acrylic film and a silicon oxynitride film formed by a sputtering method.

[0589] When the third interlayer insulating film **5110** is formed, unevenness caused by TFTs formed on the substrate **5000** is reduced and the surface can be leveled. In particular, the third interlayer insulating film **5110** is for leveling. Thus, a film having superior evenness is preferable.

[0590] Next, using dry etching or wet etching, the third interlayer insulating film **5110** is etched to form contact holes which reach the wiring **5108**.

[0591] Next, a conductive film is patterned to form a pixel electrode **5111**. In the case of this embodiment, an alloy film

of aluminum and lithium is used as the conductive film. Of course, a known MgAg film (alloy film of magnesium and silver) may be used. The pixel electrode **5111** corresponds to the cathode of the EL device. A conductive film made of an element which belongs to Group 1 or Group 2 of the periodic table or a conductive film to which those elements are added can be freely used as a cathode material.

[**0592**] The pixel electrode **5111** is electrically connected with the wiring **5108** through a contact hole formed in the third interlayer insulating film **5110**. Thus, the pixel electrode **5111** is electrically connected with one of the source region and the drain region of the drive TFT.

[**0593**] Next, as shown in **FIG. 15**D, banks **5112** are formed such that EL layers of respective pixels are separated from each other. The banks **5112** are formed from an inorganic insulating film or an organic insulating film. A silicon oxynitride film formed by a sputtering method, a silicon oxide film formed by a CVD method, or a silicon oxide film applied by an SOG method, and the like can be used as the inorganic insulating film. In addition, an acrylic resin film or the like can be used as the organic insulating film.

[**0594**] Here, when a wet etching method is used at the formation of the banks **5112**, they can be easily formed as side walls having taper shapes. If the side walls of the banks **5112** are not sufficiently gentle, the deterioration of an EL layer caused by a step becomes a marked problem. Thus, attention is required.

[**0595**] Note that, when the pixel electrode **5111** and the wiring **5108** are electrically connected with each other, the banks **5112** are formed in portions of the contact holes formed in the third interlayer insulating film **5110**. Thus, unevenness of the pixel electrode caused by unevenness of the contact hole portions is leveled by the banks **5112** so that the deterioration of the EL layer caused by the step is prevented.

[**0596**] Examples of a combination of the third interlayer insulating film **5110** and the banks **5112** will be described below.

[**0597**] There is a combination in which a laminate film stacked by an acrylic and a silicon oxynitride film formed by a sputtering method is used as the third interlayer insulating film **5110** and a silicon oxynitride film formed by a sputtering method is used as the banks **5112**. In addition, there is a combination in which a silicon oxide film formed by an SOG method is used as the third interlayer insulating film **5110** and a silicon oxide film formed by an SOG method is used as the banks **5112**. In addition, there is a combination in which a laminate film of a silicon oxide film formed by an SOG method and a silicon oxide film formed by a plasma CVD method is used as the third interlayer insulating film **5110** and a silicon oxide film formed by a plasma CVD method is used as the banks **5112**. In addition, there is a combination in which acrylic is used for the third interlayer insulating film **5110** and acrylic is used for the banks **5112**. In addition, there is a combination in which a laminate film of an acrylic film and a silicon oxide film formed by a plasma CVD method is used as the third interlayer insulating film **5110** and a silicon oxide film formed by a plasma CVD method is used as the banks **5112**. In addition, there is a combination in which a silicon oxide film formed by a plasma CVD method is used as the third interlayer insulating film **5110** and acrylic is used for the banks **5112**.

[**0598**] A carbon particle or a metallic particle may be added into the banks **5112** to reduce resistivity, thereby suppressing the generation of static electricity. At this time, the amount of carbon particle or metallic particle to be added is preferably adjusted such that the resistivity becomes 1×106 Ωm to 1×1012 Ωm (preferably, 1×108 Ωm to 1×1010 Ωm).

[**0599**] Next, an EL layer **5113** is formed on the pixel electrode **5111** which is surrounded by the banks **5112** and exposed.

[**0600**] An organic light emitting material or an inorganic light emitting material, which is known, can be used as the EL layer **5113**.

[**0601**] A low molecular weight based organic light emitting material, a high molecular weight based organic light emitting material, or a medium molecular weight based organic light emitting material can be freely used as the organic light emitting material. Note that in this specification, a medium molecular weight based organic light emitting material indicates an organic light emitting material which has no sublimation property and in which the number of molecules is 20 or less or a length of chained molecules is 10 μm or less.

[**0602**] The EL layer **5113** has generally a laminate structure. Typically, there is a laminate structure of "a hole transporting layer, a light emitting layer, and an electron transporting layer". In addition to this, a structure in which "an electron transporting layer, a light emitting layer, a hole transporting layer, and an hole injection layer" or "an electron injection layer, a light emitting layer, an hole transporting layer, and a hole injection layer" are laminated on an cathode in this order may be used. A light emitting layer may be doped with fluorescent pigment or the like.

[**0603**] In this embodiment, the EL layer **5113** is formed by an evaporation method using a low molecular weight based organic light emitting material. Specifically, a laminate structure in which a tris-8-quinolinolato aluminum complex (Alq3) film having a thickness of 70 nm is provided as the light emitting layer and a copper phthalocyanine (CuPc) film having a thickness of 20 nm is provided thereon as the light emitting layer is used. A light emission color can be controlled by adding fluorescent pigment such as quinacridon, perylene, or DCM1 to Alq3.

[**0604**] Note that only one pixel is shown in **FIG. 15D**. However, a structure in which the EL layers **5113** corresponding to respective colors of, plural colors, for example, R (red), G (green), and B (blue) are separately formed can be used.

[**0605**] Also, as an example using the high molecular weight based organic light emitting material, the EL layer **5113** may be constructed by a laminate structure in which a polythiophene (PEDOT) film having a thickness of 20 nm is provided as the hole injection layer by a spin coating method and a paraphenylenevinylene (PPV) film having a thickness of about 100 nm is provided thereon as the light emitting layer. When π conjugated system polymer of PPV is used, a light emission wavelength from red to blue can be selected.

In addition, an inorganic material such as silicon carbide can be used for the electron transporting layer and the electron injection layer.

[0606] Note that the EL layer **5113** is not limited to a layer having a laminate structure in which the hole injection layer, the hole transporting layer, the light emitting layer, the electron transporting layer, the electron injection layer, and the like are distinct. In other words, the EL layer **5113** may have a laminate structure with a layer in which materials composing the hole injection layer, the hole transporting layer, the light emitting layer, the electron transporting layer, the electron injection layer, and the like are mixed.

[0607] For example, the EL layer **5113** may have a structure in which a mixed layer composed of a material composing the electron transporting layer (hereinafter referred to as an electron transporting material) and a material composing the light emitting layer (hereinafter referred to as a light emitting material) is located between the electron transporting layer and the light emitting layer.

[0608] Next, a pixel electrode **5114** made from a transparent conductive film is formed on the EL layer **5113**. A compound of indium oxide and tin oxide (ITO), a compound of indium oxide and zinc oxide, zinc oxide, tin oxide, indium oxide, or the like can be used for the transparent conductive film. In addition, the transparent conductive film to which gallium is added may be used. The pixel electrode **5114** corresponds to the anode of the EL device.

[0609] When the pixel electrode **5114** is formed, the EL device is completed. Note that the EL device indicates a diode composed of the pixel electrode (cathode) **5111**, the EL layer **5113**, and the pixel electrode (anode) **5114**.

[0610] In this embodiment, the pixel electrode **5114** is made from the transparent conductive film. Thus, light emitted from the EL device is radiated to an opposite side to the substrate **5000**. In addition, through the third interlayer insulating film **5110**, the pixel electrode **5111** is formed in the layer different from the layer in which the wirings **5106** to **5109** are formed. Thus, an aperture ratio can be increased as compared with the structure described in Embodiment 4

[0611] It is effective that a protective film (passivation film) **5115** is provided to completely cover the EL device. A single layer of an insulating film such as a carbon film, a silicon nitride film, or a silicon oxynitride film, or a laminate layer of a combination thereof can be used as the protective film **5115**.

[0612] Note that, when light emitted from the EL device is radiated from the pixel electrode **5114** side as in this embodiment, it is necessary to use a film which transmits light as a protective film **5115**.

[0613] Note that it is effective that steps up to the formation of the protective film **5115** after the formation of the banks **5112** are conducted in succession using a multi-chamber type (or in-line type) film formation apparatus without being exposed to air.

[0614] Note that, actually, when it is completed up to the state shown in **FIG. 15**D, in order not to be exposed to air, it is preferable that packaging (sealing) is conducted using a protective film (laminate film, ultraviolet curable resin film, or the like) or a sealing member which has a high airtight property and low degassing. At the same time, when an inner portion surrounded by the sealing member is made to an inert atmosphere or a hygroscopic material (for example, barium oxide) is located in the inner portion, the reliability of the EL device is improved.

[0615] Also, after an airtightness level is improved by processing such as packaging, a connector (flexible printed circuit: FPC) for connecting terminals led from devices or circuits which are formed on the substrate **5000** with external signal terminals is attached so that it is completed as a product.

[0616] Embodiment 6

[0617] In this embodiment, an example in which a light emitting device is manufactured according to the present invention will be described using **FIGS. 30A** to **30**C.

[0618] **FIG. 30A** is a top view of a light emitting device produced by sealing a device substrate in which TFTs are formed with a sealing member. **FIG. 30B** is a cross sectional view along a line A-A' in **FIG. 30A**. **FIG. 30C** is a cross sectional view along a line B-B' in **FIG. 30A**.

[0619] A seal member **4009** is provided to surround a pixel part **4002**, a source signal line driver circuit **4003**, and first and second gate signal line driver circuits **4004***a* and **4004***b* which are provided on a substrate **4001**. In addition, a sealing member **4008** is provided over the pixel part **4002**, the source signal line driver circuit **4003**, and the first and second gate signal line driver circuits **4004***a* and **4004***b*. Thus, the pixel part **4002**, the source signal line driver circuit **4003**, and the first and second gate signal line driver circuits **4004***a* and **4004***b* are sealed with the substrate **4001**, the seal member **4009** and the sealing member **4008** and filled with a filling agent **4210**.

[0620] Also, the pixel part **4002**, the source signal line driver circuit **4003**, and the first and second gate signal line driver circuits **4004***a* and **4004***b* which are provided on the substrate **4001** each have a plurality of TFTs. In **FIG. 30**B, TFTs (note that an N-channel TFT and a P-channel TFT are shown here) **4201** included in the source signal line driver circuit **4003** and a TFT **4202** included in the pixel part **4002**, which are formed on a base film **4010** are typically shown.

[0621] An interlayer insulating film (planarization film) **4301** is formed on the TFTs **4201** and **4202**, and a pixel electrode (anode) **4203** electrically connected with the drain of the TFT **4202** is formed thereon. A transparent conductive film having a large work function is used as the pixel electrode **4203**. A compound of indium oxide and tin oxide, a compound of indium oxide and zinc oxide, zinc oxide, tin oxide, or indium oxide can be used for the transparent conductive film. In addition, the transparent conductive film to which gallium is added may be used.

[0622] An insulating film **4302** is formed on the pixel electrode **4203**. An opening portion is formed in the insulating film **4302** on the pixel electrode **4203**. In the opening portion, an organic light emitting layer **4204** is formed on the pixel electrode **4203**. An organic light emitting material or an inorganic light emitting material which are known can be used as the organic light emitting layer **4204**. In addition, the organic light emitting material includes a low molecular weight based (monomer system) material and a high molecular weight based (polymer system) material, and any material may be used.

[0623] An evaporation technique or an applying method technique which are known is preferably used as a method of forming the organic light emitting layer **4204**. In addition, a laminate structure or a single layer structure which is obtained by freely combining a hole injection layer, a hole transporting layer, a light emitting layer, an electron transporting layer, and an electron injection layer.

[0624] A cathode **4205** made from a conductive film having a light shielding property (typically, a conductive film containing mainly aluminum, copper, or silver, or a laminate film of the conductive film and another conductive film) is formed on the organic light emitting layer **4204**. In addition, it is desirable that moisture and oxygen which exist in an interface between the cathode **4205** and the organic light emitting layer **4204** are minimized. Thus, a devise is required in which the organic light emitting layer **4204** is formed in a nitrogen atmosphere or a noble gas atmosphere and the cathode **4205** without being exposed to oxygen and moisture is formed. In this embodiment, the above film formation is possible by using a multi-chamber type (cluster tool type) film formation apparatus. A predetermined voltage is supplied to the cathode **4205**.

[0625] By the above steps, a light emitting device **4303** composed of the pixel electrode (anode) **4203**, the organic light emitting layer **4204**, and the cathode **4205** is formed. A protective film **4209** is formed on the insulating film **4302** so as to cover the light emitting device **4303**. The protective film **4209** is effective to prevent oxygen, moisture, and the like from penetrating the light emitting device **4303**.

[0626] Reference numeral **4005***a* denotes a lead wiring connected with a power source, which is connected with a first electrode of the TFT **4202**. The lead wiring **4005***a* is passed between the seal member **4009** and the substrate **4001** and electrically connected with an FPC wiring **4301** of an FPC **4006** through an anisotropic conductive film **4300**.

[0627] A glass material, a metallic member (typically, a stainless member), a ceramic member, a plastic member (including a plastic film) can be used as the sealing member **4008**. An FRP (fiberglass reinforced plastic) plate, a PVF (polyvinyl fluoride) film, a Mylar film, a polyester film, or an acrylic resin film can be used as the plastic member. In addition, a sheet having a structure in which aluminum foil is sandwiched by a PVF film and a Mylar film can be used.

[0628] Note that, when a radiation direction of light from the light emitting device is toward a cover member side, it is required that the cover member is transparent. In this case, a transparent material such as a glass plate, a plastic plate, a polyester film, or acrylic film is used.

[0629] Also, in addition to an inert gas such as nitrogen or argon, ultraviolet curable resin or thermal curable resin can be used for the filling agent **4210**. PVC (polyvinyl chloride), acrylic, polyimide, epoxy resin, silicon resin, PVB (polyvinyl butyral), or EVA (ethylene vinyl acetate) can be used. In this embodiment, nitrogen is used for the filling agent.

[0630] Also, in order to expose the filling agent **4210** to a hygroscopic material (preferably barium oxide) or a material capable of absorbing oxygen, a concave portion **4007** is provided to the surface of the sealing member **4008** in the substrate **4001** side, and the hygroscopic material or the material capable of absorbing oxygen which is indicated by **4207** is located. In order to prevent the material **4207** having a hygroscopic property or being capable of absorbing oxygen from flying off, the material **4207** having a hygroscopic property or being capable of absorbing oxygen is held in the concave portion **4007** by a concave cover member **4208**. Note that concave cover member **4208** is formed in a fine meshed shape and constructed such that it transmits air and moisture but does not transmit the material **4207** having a hygroscopic property or being capable of absorbing oxygen. When the material **4207** having a hygroscopic property or being capable of absorbing oxygen is provided, the deterioration of the light emitting device **4303** can be suppressed.

[0631] As shown in **FIG. 30C, a** conductive film **4203***a* is formed on the lead wiring **4005***a* such that it is in contact with the lead wiring **4005***a* simultaneously with the formation of the pixel electrode **4203**.

[0632] Also, the anisotropic conductive film **4300** has a conductive filler **4300***a*. When the substrate **4001** and the FPC **4006** are bonded to each other by thermal compression, the conductive film **4203***a* located over the substrate **4001** and the FPC wiring **4301** located on the FPC **4006** are electrically connected with each other through the conductive filler **4300***a*.

[0633] Embodiment 7

[0634] In this embodiment, an external light emitting quantum efficiency can be remarkably improved by using an EL material by which phosphorescence from a triplet exciton can be employed for emitting a light. As a result, the power consumption of the EL device can be reduced, the lifetime of the EL device can be elongated and the weight of the EL device can be lightened.

[0635] The following is a report where the external light emitting quantum efficiency is improved by using the triplet exciton (T. Tsutsui, C. Adachi, S. Saito, Photochemical processes in Organized Molecular Systems, ed. K. Honda, (Elsevier Sci. Pub., Tokyo, 1991) p. 437).

[0636] The molecular formula of an EL material (coumarin pigment) reported by the above article is represented as follows.

(Chemical formula 1)

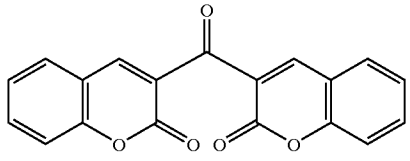

[0637] (M. A. Baldo, D. F. O□ Brien, Y. You, A. Shoustikov, S. Sibley, M. E. Thompson, S. R. Forrest, Nature 395 (1998) p.151)

[0638] The molecular formula of an EL material (Pt complex) reported by the above article is represented as follows.

(Chemical formula 2)

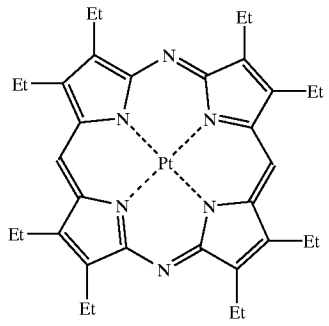

[0639] (M. A. Baldo, S. Lamansky, P. E. Burrows, M. E. Thompson, S. R. Forrest, Appl. Phys. Lett., 75 (1999) p.4.)

[0640] (T. Tsutsui, M.-J. Yang, M. Yahiro, K. Nakamura, T. Watanabe, T. Tsuji, Y. Fukuda, T. Wakimoto, S. Mayaguchi, Jpn, Appl. Phys., 38 (12B) (1999) L1502)

[0641] The molecular formula of an EL material (Ir complex) reported by the above article is represented as follows.

(Chemical formula 3)

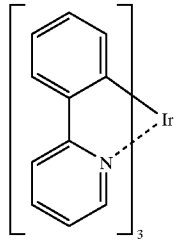

[0642] As described above, if phosphorescence from a triplet exciton can be put to practical use, it can realize the external light emitting quantum efficiency three to four times as high as that in the case of using fluorescence from a singlet exciton in principle.

[0643] Embodiment 8

[0644] Although p-channel TFTs are used in the driver TFTs for the structures disclosed up to this point in this specification, it is also possible to apply the present invention to a structure in which n-channel TFTs are used in the driver TFTs. The structure is shown in **FIG. 32A**.

[0645] A driver TFT **3209** is an n-channel TFT. In this case, a source region is a side connected to an anode of an EL device **3212**, and a drain region is a side connected to an electric current supply line **3211**. A capacitive means **3210** is formed at a node at which the voltage between the gate and the source of the driver TFT **3209** can be stored. The capacitive means **3210** may therefore also be formed between a gate electrode of the driver TFT **3209** and a source region of the driver TFT **3209**, in addition to the node shown in **FIG. 32A**.

[0646] Operation is explained. First, a TFT **3207** is turned on, and the electric potential of a drain region of a TFT **3206** is set high, as shown in **FIG. 32B**. The TFT **3205** then turns on as shown in **FIG. 32C**, and input of an image signal is performed. The TFT **3206** turns off at the point when the voltage between its source and drain becomes equal to the threshold value of the TFT **3206**, resulting in a state as shown in **FIG. 32D**. The electric potential of a source region of the TFT **3206** is VData, and therefore the electric potential of the drain region of the TFT **3206**, that is the electric potential of the gate electrode of the driver TFT **3209**, is VData+Vth.

[0647] If a TFT **3208** then turns off, electric current flowing from the electric current supply line through the driver TFT **3209** flows into the EL device **3212**, which then emits light. Even if there is dispersion in the threshold voltages of the driver TFTs **3209** between adjacent pixels, the voltage between the source and the drain of the TFT **3206**, namely the threshold voltage of the TFT **3206**, is added to the image signal regardless of such dispersion, and therefore dispersion in the voltages between the gate and the source of the driver TFTs **3209** does not occur between adjacent pixels.

[0648] In addition, the voltage between an anode and a cathode increases when there is degradation of the EL device **3212** due to light emission with the structure shown in **FIG. 32**. Normally, this would cause a problem in which the electric potential of the source region of the TFT **3209** rises, thus making the voltage between the gate and the source during light emission smaller as a result. In accordance with the structure disclosed in Embodiment 8, however, the electric potential of the source region of the driver TFT **3209** is fixed at the electric potential of an electric power source line **3214** by turning the TFT **3208** on during input of the image signal in **FIGS. 32C and 32D**. The capacitive means **3210** therefore stores the voltage between the gate and the source of the driver TFT **3209** as discussed above, and the voltage between the gate and the source does not become smaller even if the electric potential of the source region of the driver TFT **3209** changes. Reduction in brightness over time can therefore be suppressed.

[0649] Note that the TFT **3206**, which is diode connected, and the driver TFT **3209** are n-channel TFTs in Embodiment 8. All other TFTs are only used as switching devices for performing only on and off control, and therefore may be of any polarity.

[0650] Further, the wirings may also be shared as in the case where the driver TFT is a p-channel TFT. For example, a gate signal line **3203** for controlling the TFT **3207** may also be used as a gate signal line of the previous stage. Furthermore, it is also possible for the electric power source line **3214** to be shared with a gate signal line of any row except for the one currently being selected, provided that the gate signal line has a fixed electric potential, during a period for performing the operations of **FIGS. 32C and 32D**. An electric power source line **3213** and the electric power source line **3214** may also be shared.

[0651] Further, the addition of TFTs and other steps may be taken if an erasure period is provided, similar to the case in which the driver TFT is a p-channel TFT, and a means for cutting off electric current supplied to the EL device **3212** during an arbitrary period may also be formed.

[0652] Embodiment 9

[0653] An example of a different circuit structure utilizing a voltage effect caused by a diode connection is explained in Embodiment 9.

[0654] An example structure is shown in **FIG. 33A**. A TFT **3309** is formed between a gate electrode and a drain electrode of a TFT **3309**, and the TFT **3308** exhibits the behavior as a diode connected TFT when the TFT **3309** is on. The TFT **3309** behaves as a driver TFT for performing control of electric current supplied to an EL device **3313** when the TFT **3309** is off.

[0655] Operation is explained. First, the TFT **3306** turns on, and an image signal VData is input as shown in **FIG. 33B**. In addition, the TFT **3309** and a TFT **3310** turn on, and the TFT **3308** thus behaves as a diode connected TFT. When the TFT **3310** then turns off electric charge moves as shown in **FIG. 33C**. The voltage between the source and the drain of the TFT **3308**, in other words the voltage between the gate and the source of the TFT **3308**, eventually becomes equal to the threshold voltage, at which point the TFT **3308** turns off as shown in **FIG. 33D**.

[0656] The TFTs **3307** and **3310** then turn on. The electric potential of a source region of the TFT **3308** increases from VData to VDD as the TFT **3307** turns on. The voltage between the gate and the source of the TFT **3308** therefore exceeds the threshold voltage to cause it to turn on, so that electric current flows in the EL device **3313** to cause it to emit light, as shown in **FIG. 33E**.

[0657] Thus, an electric potential difference equal to the threshold value can be produced between the gate and the source of the driver TFT **3308** in advance in accordance with the above processes, so that even if there is dispersion in the threshold voltages of the TFTs **3308** between adjacent pixels, there is no dispersion in the voltages between the gate and the source of the driver TFTs **3308** of adjacent pixels. In addition, correction of dispersions in the threshold values is performed in the foregoing embodiments by a method in which the threshold voltage of a diode connected TFT is added to the image signal, and then input to the gate electrode of another driver TFT. However, satisfactory correction cannot be performed by this method for cases in which there is dispersion in the threshold voltages between the diode connected TFT and the driver TFT. In contrast, the same TFT is used for the TFT that acquires the threshold value by a diode connection and the driver TFT in accordance with the structure of Embodiment 9 shown in **FIG. 33A**. Therefore, even if dispersion occurs in the threshold values between adjacent TFTs, the threshold value of the above TFT itself is used as it is for the correction, and therefore threshold value correction is performed correctly in all cases.

[0658] Further, the TFT **3310** can also be used as an erasure TFT when applying a driving method that uses a digital time gray scale method. In addition, the erasure TFT can be placed in any location, provided that it is a location at which electric current supplied to the EL device can be cut off at an arbitrary timing.

[0659] Furthermore, a gate signal line for controlling a TFT can be shared among a plurality of TFTs, as shown in **FIGS. 34A and 34B**. For example, the TFT **3306** and the TFT **3307** are controlled so as to turn on and off at mutually opposite timings, and therefore the polarity of one of the TFTs may be made opposite to the polarity of the other TFT, and both of the TFTs can thus be controlled by the same gate signal line **3402**, as shown in **FIG. 34A**. Similarly, the TFT **3306** and the TFT **3309** in **FIG. 33A** are controlled to turn on and off at the same timing. They can therefore be controlled by using the same gate signal line **3452**, as shown in **FIG. 34B**. The structures shown in **FIGS. 34A and 34B** may also be combined, of course.

[0660] TFTs **3409** and **3459** can also be used as erasure TFTs here.

[0661] Embodiment 10

[0662] Threshold voltage acquisition can be performed at high speed by adding TFTs **3511** and **3512**, as shown in **FIG. 35A**, to the structure shown in **FIG. 33A**. Two TFTs, a TFT **3508** and a TFT **3512**, are used in a period for performing threshold voltage acquisition, as shown in **FIGS. 35B and 35C**, and only one TFT, the TFT **3508**, is used in a period for supplying electric current to an EL device **3515** for during light emission, as shown in **FIG. 35E**. Threshold voltage acquisition can be performed at very high speed by making a channel length L and a channel width W of the TFT **3512** such that W/L becomes larger.

[0663] It is also possible to use a TFT **3510** as an erasure TFT in this case.

[0664] Embodiment 11

[0665] In the structures shown FIGS. **33** to **35**, there are cases in which electric current flows in the EL device to cause light emission, before or after threshold voltage acquisition, that is during a period that is not the normal light emitting period. In these cases the value of the electric current flowing in the EL device is not necessarily equal to the image signal plus the correct threshold value, and this therefore causes errors to develop between the actual brightness and the target brightness.

[0666] A TFT **3612** is therefore added as shown in **FIG. 36A**. Electric current flowing in the TFT **3609** during input of the image signal flows through the TFT **3612** and to an electric power source line **3617**. An electric current path to the EL device **3615** is cut off by a TFT **3611**, and therefore the EL device **3615** does not emit light. Light emission by the EL device during unnecessary periods can thus be prevented by using this type of structure.

[0667] It is also possible to use the TFT **3611** as an erasure TFT in this case.

[0668] Further, the electric power source line **3617** may also be shared with a gate signal line of another row, similar to other embodiments. In addition, it is possible for a gate signal line **3604** and a gate signal line **3606** to be shared with each other. However, it is necessary to adjust the electric potentials of an electric power source line **3616** and the electric power source line **3617** so that electric current does not flow to the EL device **3615** when the TFT **3612** is on.

[0669] Embodiment 12

[0670] The structure shown in **FIG. 37A** can be given as an additional structure for performing the threshold voltage acquisition at higher speed. TFTs **3708** and **3709**, which have the same polarity, are connected in series as driver TFTs. P-channel TFTs are used here. Further, a TFT **3709**,

which connects a gate electrode and a drain region of the driver TFT **3708**, is also structured to connect a gate electrode and a source region of the driver TFT **3710** at the same time.

[**0671**] As shown in **FIGS. 37B and 37C**, the driver TFT **3708** behaves as a diode connected TFT by turning the TFT **3709** on in a period for acquiring the threshold voltage from an image signal input, and the threshold voltage can be acquired between the source and the drain. The TFT **3708** is made to perform high speed acquisition of the threshold voltage by making W/L larger at this time. On the other hand, if one looks at the TFT **3710**, which is connected in series with the driver TFT **3708**, there is obtained a connection between the gate electrode and the source region of the TFT **3710** when the TFT **3709** turns on. That is, the voltage between the gate and the source of the driver TFT **3710** becomes zero when the TFT **3709** turns on in this period, so that the TFT **3710** turns off. Electric current therefore does not flow in the EL device **3714**, but rather flows through the TFT **3711** to the electric power source line **3716**.

[**0672**] The TFT **3709** is turned off in the subsequent light emitting period, and the connection between the gate electrode and the source region of the driver TFT **3710** is cut off. A part of an electric charge storing the threshold voltage of the driver TFT **3708** therefore moves to the gate electrode of the driver TFT **3710**, and the TFT **3710** automatically turns on. The driver TFTs **3708** and **3710** have a connection between their gate electrodes at this point, and therefore operate as a multi-gate TFT. L therefore becomes larger during light emission than during threshold voltage acquisition. The electric current flowing through the driver TFTs **3708** and **3710** thus becomes very small. In other words, the electric current flowing in the EL device can be made small even if W/L is made large for the driver TFT **3708**. Electric current consequently flows through both of the driver TFTs **3708** and **3710** into the EL device **3714**, which then emits light, as shown in **FIG. 37E**. Light emission by the EL device during unnecessary periods can therefore be suppressed, similar to the case of **FIG. 36**.

[**0673**] Note that the voltage between the gate and the source of the driver TFT **3710** can be forcibly set to zero, to turn the driver TFT **3710** off, by turning the TFT **3709** on for cases in which an erasure period is formed, and therefore EL light emission can be stopped.

[**0674**] Further, the electric power source line **3716** can also be shared with a gate signal line of another row, similar to other embodiments. Furthermore, the gate signal lines may also be shared as shown in **FIGS. 34A and 34B**.

[**0675**] Embodiment 13

[**0676**] A structure differing from that of Embodiment 8 for a case of using an n-channel TFT in a driver TFT is explained in Embodiment 13.

[**0677**] **FIG. 38A** shows an example structure. The basic structural principle is similar to those of other embodiments, and a TFT **3809** is formed in a position for connecting a gate electrode and a drain electrode of a driver TFT **3810**.

[**0678**] Operation is explained. An image signal VData is input, and movement of electric charge is caused as shown in **FIG. 38B**. By turning a TFT **3811** off at this point, an EL device **3815** is made not to emit light. Acquisition of the threshold voltage of the TFT **3810** is then performed as shown in **FIG. 38**C, and the TFT **3810** turns off when the voltage between the source and the drain of the TFT **3810** eventually becomes equal to its threshold voltage. Acquisition of the threshold voltage is thus complete, as shown in **FIG. 38D**.

[**0679**] A TFT **3808** and the TFT **3811** are then turned on, electric current flows as shown in **FIG. 38**E, and the EL device **3815** emits light. Note that a capacitive means **3813** may be formed at a location for storing the voltage between the gate and the source of the TFT **3810** during light emission. Even if the electric potential of an anode of the EL device **3815** increases due to degradation of the EL device **3815** over time, the voltage between the gate and the source of the TFT **3810** is thus prevented from becoming smaller. This can contribute to deterring drops in brightness caused by degradation of the EL device **3815**.

[**0680**] It is also possible to use the TFT **3811** as an erasure TFT in this case.

[**0681**] Further, the electric power source line **3817** can also be shared with a gate signal line of another row, similar to other embodiments. Furthermore, the gate signal lines may also be shared as shown in **FIGS. 34A and 34B**.

[**0682**] Embodiment 14

[**0683**] An additional example of a structure using an n-channel TFT in a driver TFT is shown in **FIG. 39A**. TFTs **3908** and **3911** are connected in series as driver TFTs, and a gate electrode and a drain region of the TFT **3911** are connected by a TFT **3911**. The TFT **3910** also connects a gate electrode and a source region of the TFT **3908** at the same time.

[**0684**] Movement of electric charge occurs as shown in **FIG. 39B** during image signal input. The gate electrode and the drain region of the TFT **3911** are connected by turning the TFT **3910** on at this point, and the TFT **3911** behaves as a diode connected TFT. On the other hand, the gate electrode and the source region of the TFT **3908** are similarly connected by turning the TFT **3910** on, that is, the voltage between the gate and the source of the TFT **3908** becomes zero, and therefore electric current does not flow.

[**0685**] Electric charge then moves as shown in **FIG. 39C** if the TFT **3909** is turned off, and acquisition of the threshold voltage of the TFT **3911** is performed. The TFT **3911** turns off at the point when the voltage between the source and the drain of the TFT **3911** becomes equal to the threshold voltage. Acquisition of the threshold voltage is thus complete, as shown in **FIG. 39D**.

[**0686**] Electric current then flows in an EL device **3916** as shown in **FIG. 39**E, and the EL device **3916** emits light. Note that a capacitive means **3914** may be formed at a location for storing the voltage between the gate and the source of the TFT **3911** during light emission. Even if the electric potential of an anode of the EL device **3916** increases due to degradation of the EL device **3916** over time, the voltage between the gate and the source of the TFT **3911** is thus prevented from becoming smaller. This can contribute to deterring drops in brightness caused by degradation of the EL device **3916**.

[0687] The gate electrodes of the driver TFTs **3908** and **3911** are also connected here, similar to the structure shown in **FIG. 37**, and therefore the driver TFTs **3908** and **3911** each function as a multi-gate TFT. The electric current flowing in the EL device **3916** can therefore be made small, even if W/L of the driver TFT **3911** is increased in order to perform threshold voltage acquisition at higher speed.

[0688] It is also possible to use a TFT **3912**, or the TFT **3910**, as an erasure TFT here. An electric current path to the EL device **3916** can be cut off by turning the TFT **3912** off. Further, the voltage between the gate and the source of the driver TFT **3908** is forcibly set to zero, to turn the TFT **3908** off, by turning the TFT **3910** on, and therefore light emission by the EL device **3916** can be stopped.

[0689] Embodiment 15

[0690] The method disclosed in Embodiment 10 can also be applied to a structure using an n-channel TFT in a driver TFT. An example structure is shown in **FIG. 40A**.

[0691] The structure shown in **FIG. 40A** is one in which TFTs **4009** and **4010** are added to the structure shown in **FIG. 38A**. The TFTs **4010** and **4012** are disposed in parallel, and both of the TFTs **4010** and **4012**, connected in parallel as shown in **FIG. 40**C, are used in a period for threshold voltage acquisition. The TFT **4009** is turned off during a light emitting period, and electric current is supplied to an EL device **4017** only through the TFT **4012**. Acquisition of the threshold voltage can be performed at higher speed by making W/L of the TFT **4010**, which is not used as an electric current path during the light emitting period, larger.

[0692] It is also possible to use a TFT **4013** as an erasure TFT in this case.

[0693] Embodiment 16

[0694] A phenomenon in which current flows between the source and the drain of a transistor used for making corrections, while causing short circuit between the gate and the drain thereof to turn the transistor into a diode, whereby there is a, and the voltage between the source and the drain of the transistor becomes equal to the threshold value of the transistor, is utilized as a method of correcting the threshold value of the transistor in the present invention, but it is also possible to apply this method to a driver circuit, not only to a pixel portion as introduced by the present invention.

[0695] A current source circuit in a driver circuit for outputting current to pixels and the like can be given as an example. The current source circuit is a circuit for outputting a desired current from an input voltage signal. The voltage signal is input to a gate electrode of a current source transistor within the current source circuit, and a current corresponding to the voltage between the gate and the source of the current source transistor is output through the current source transistor. That is, the threshold value correction method of the present invention is used in correcting the threshold value of the current source transistor.

[0696] An example of an application of the current source circuit is shown in **FIG. 41A**. Sampling pulses are output one after another from a shift register circuit, the sampling pulses are each input to a current source circuit **9001**, and sampling of a video signal is performed in accordance with the timing at which the sampling pulses are input to the current source circuit **9001**. Sampling operations are performed in a dot sequential manner in this case.

[0697] A simple operation timing is shown in **FIG. 41B**. A period during which an i-th gate signal line is selected is divided into a period for outputting the sampling pulses from the shift register and performing sampling of the video signal, and a fly-back period. The threshold value correction operations of the present invention, that is, a series of operations including the initialization of the electric potential of each portion, the acquisition of transistor threshold value voltages, or the like is performed during this fly-back period. That is, the threshold value acquisition operations can be performed per single horizontal period.

[0698] The structure of a driver circuit, which differs from that of **FIG. 41**, for outputting current to pixels and the like is shown in **FIG. 42A**. Points of difference with the case of **FIG. 41** are that the current source circuit **9001**, which is controlled by one stage of sampling pulses, becomes two current source circuits **9001**A and **9001**B, and operations of both circuits are selected by a current source control signal.

[0699] The current source control signal is switched per single horizontal period, for example, as shown in **FIG. 42B**. The operations of the current source circuits **9001** A and **9001**B are thus performed such that one performs current output to the pixels and the like, while the other performs video signal input and the like. This is switched every row. Sampling operations are thus performed in a line sequential manner in this case.

[0700] The driver circuit of another different structure is shown in **FIG. 43A**. It doesn't matter whether the video signal is digital or analog in **FIG. 41** and **FIG. 42**, but a digital video signal is input with the structure of **FIG. 43A**. The input digital video signal is taken in by a first latch circuit in accordance with output sampling pulses, is transferred to a second latch circuit after the video signals corresponding to one row have been taken in, and then output to each of the current source circuits **9001**A to **9001**C. The values of the currents output by each of the current source circuits **9001**A to **9001**C differ from each other. For example, the ratio of the current values may become 1:2:4. That is, the output current value can be changed linearly by disposing n current source circuits in parallel, setting the ratio of their current values to 1:2:4: . . . :2(n−1), and adding the currents output from each of the current source circuits.

[0701] Operation timing is nearly similar to that shown in **FIG. 41**, and threshold value correction operations in the current source circuit **9001** are performed within a fly-back period during which sampling operations are not performed. Data stored in the latch circuit is then transferred, V-I conversion is performed in the current source circuit **9001**, and current is output to pixels. The sampling operations are performed in a line sequential manner, similar to the structure shown in **FIG. 42**.

[0702] The driver circuit of another different structure for outputting current to pixels and the like is shown in **FIG. 44A**. With this structure, a digital video signal taken in by a latch circuit is transferred to a D/A converter circuit in accordance with input of a latch signal, the digital video signal is converted to an analog video signal, the analog video signal is input to each current source circuit **9001**, and current is output.

[0703] Further, this type of D/A converter circuit may also be given a gamma correction function, for example.

[0704] Threshold value correction and latch data transfer are performed within a fly-back period as shown in **FIG. 44**B, and during a period for performing sampling operations of a certain row, V-I conversion of the video signal of the previous row, and output of current to the pixels and the like are performed. The sampling operations are performed in a line sequential manner, similar to the structure shown in **FIG. 42**.

[0705] The present invention is not limited to the structures shown above, and it is possible to apply the threshold value correction means of the present invention to cases in which V-I conversion is performed by a current source circuit. Further, a structure in which a plurality of current source circuits are disposed in parallel and switchingly used, as shown in **FIG. 42**, may be used in combination with the structures of **FIG. 43**, **FIG. 44**, and the like.

[0706] Embodiment 17

[0707] As light emitting devices using light emitting devices are self-luminous, they are superior in visibility in bright places and have wider angle of view compared with a liquid crystal display device. Therefore, they can be used in display portions of various electronic equipment.

[0708] Examples of electronic equipment using the light emitting device of the present invention include, video cameras, digital cameras, goggle type displays (head mounted displays), navigation systems, audio playback devices (car audios, audio components, etc.), notebook type personal computers, game machines, portable information terminals (mobile computers, mobile telephones, mobile type game machines, electronic books, etc.), image reproduction devices equipped with a recording medium (specifically, devices equipped with a display capable of reproducing the recording medium such as a digital versatile disk (DVD) and displaying the image thereof), and the like. In particular, as to the portable information terminals, in which there are a lot of opportunities to look at the screen from a diagonal direction, since the extent of angle of view is regarded as important, the light emitting device is desirably used. Concrete examples of these electronic equipment are shown in **FIG. 31**.

[0709] **FIG. 31A** is a light emitting device display device, which is composed of a frame **3001**, a support base **3002**, a display portion **3003**, a speaker portion **3004**, a video input terminal **3005**, and the like. The light emitting device of the present invention can be used in the display portion **3003**. Since the light emitting device is self-luminous, there is no need for a backlight, whereby it is possible to obtain a thinner display portion than that of a liquid crystal display device. Note that the term light emitting device display device includes all display devices for displaying information, such as personal computer monitors, display devices for receiving TV broadcasting, and display devices for advertising.

[0710] **FIG. 31B** is a digital still camera, which is composed of a main body **3101**, a display portion **3102**, an image-receiving portion **3103**, operation keys **3104**, an external connection port **3105**, a shutter **3106**, and the like. The light emitting device of the present invention can be used in the display portion **3102**.

[0711] **FIG. 31 C** is a notebook type personal computer, which is composed of a main body **3201**, a frame **3202**, a display portion **3203**, a keyboard **3204**, an external connection port **3205**, a pointing mouse **3206**, and the like. The light emitting device of the present invention can be used in the display portion **3203**.

[0712] **FIG. 31D** is a mobile computer, which is composed of a main body **3301**, a display portion **3302**, a switch **3303**, operation keys **3304**, an infrared port **3305**, and the like. The light emitting device of the present invention can be used in the display portion **3302**.

[0713] **FIG. 31E** is a portable image reproduction device provided with a recording medium (specifically, a DVD playback device), which is composed of a main body **3401**, a frame **3402**, a display portion A **3403**, a display portion B **3404**, a recording medium (such as a DVD) read-in portion **3405**, operation keys **3406**, a speaker portion **3407**, and the like. The display portion A **3403** mainly displays image information, and the display portion B **3404** mainly displays character information, and the light emitting device of the present invention can be used in the display portion A **3403** and in the display portion B **3404**. Note that image reproduction device provided with a recording medium includes game machines for domestic use and the like.

[0714] **FIG. 31F** is a goggle type display (head mounted display), which is composed of a main body **3501**, a display portion **3502**, an arm portion **3503**, and the like. The light emitting device of the present invention can be used in the display portion **3502**.

[0715] **FIG. 13G** is a video camera, which is composed of a main body **3601**, a display portion **3602**, a frame **3603**, an external connection port **3604**, a remote control receiving portion **3605**, an image receiving portion **3606**, a battery **3607**, an audio input portion **3608**, operation keys **3609**, and the like. The light emitting device of the present invention can be used in the display portion **3602**.

[0716] **FIG. 31H** is a mobile telephone, which is composed of a main body **3701**, a frame **3702**, a display portion **3703**, an audio input portion **3704**, an audio output portion **3705**, operation keys **3706**, an external connection port **3707**, an antenna **3708**, and the like. The light emitting device of the present invention can be used in the display portion **3703**. Note that by displaying white characters on a black background, the display portion **3703** can suppress the power consumption of the mobile telephone.

[0717] Note that if the emission luminance of the organic material becomes higher in the future, light including the outputted image information is magnified-projected with a lens or the like, whereby it will be possible to use the projected light in front type projectors or rear type projectors.

[0718] Further, the above-described electronic equipment often displays information transmitted through electronic transmission circuits such as the Internet and CATV (cable television), and in particular, opportunities for displaying dynamic information are increasing. The response speed of organic light emitting materials are extremely high, and therefore it is preferable to use light emitting devices for dynamic display.

[0719] Further, light emitting devices consume electric power in their light emitting portions, and therefore it is

preferable that information is displayed such that the light emitting portions can be made as small as possible. It is therefore preferable to perform driving such that non-light emitting portions form a background, and character information is formed by the light emitting portions, for cases in which the light emitting device is used in a display portion of a portable information terminal, in particular that of a portable telephone or an audio playback device which mainly uses character information.

[0720] The applicable range of the present invention is thus extremely wide, and it is possible to use the present invention in electronic equipment of all fields. Further, the electronic equipment of Embodiment 16 may use a light emitting device having the structure of any of Embodiments 1 to 15.

[0721] Effect of the Invention

[0722] Dispersions in the threshold values of TFTs can be corrected to be rendered normal irrespective of influence of dispersions and the like in the capacitance values of capacitive means, in accordance with the present invention. In addition, when applying the present invention to a light emitting device as shown in **FIG. 22**, and **FIG. 23**, although there are many operations to be performed within one horizontal period in the conventional example, it becomes possible to achieve high speed circuit operation based on the simplified operational principle of the present invention and therefore simple operation timing is also simple. In particular, it becomes possible to display a high quality image using an image signal having a very large number of bits when performing display by a method in which a digital gray scale method and a time gray scale method are combined.

What is claimed is:

1. A semiconductor device comprising:

a switching device; and

a rectifying device,

characterized in that:

a first signal V_1 is input to a first electrode of the rectifying device;

a second electrode of the rectifying device is electrically connected to a first electrode of the switching device;

a certain electric potential V is imparted to a second electrode of the switching device; and

an offset signal V_2 equal to the signal V_1 offset by a threshold value V_{th} is obtained from the second electrode of the rectifying device.

2. A semiconductor device comprising:

first and second switching devices; and

a rectifying device,

characterized in that:

a first signal V_1 is input to a first electrode of the first switching device;

a second electrode of the first switching device is electrically connected to a first electrode of the rectifying device;

a second electrode of the rectifying device is electrically connected to a first electrode of the second switching device;

a certain electric potential V is imparted to a second electrode of the second switching device; and

an offset signal V_2 equal to the signal V_1 offset by a threshold value V_{th} is obtained from the second electrode of the rectifying device.

3. A semiconductor device comprising first and second rectifying devices, characterized in that:

a first signal V_1 is input to a first electrode of the first rectifying device;

a second electrode of the first rectifying device is electrically connected to a first electrode of the second rectifying device;

a certain electric potential V is imparted to a second electrode of the second rectifying device; and

an offset signal V_2 equal to the signal V_1 offset by a threshold value V_{th} is obtained from the second electrode of the first rectifying device.

4. A semiconductor device as claimed in any one of claims 1 to 3, characterized in that:

the rectifying device uses a transistor having a connection between its gate and its drain;

$V_1+V_{th}<V$, and $V_2=V_1+V_{th}$ are satisfied when the polarity of the transistor is n-channel and its threshold value is V_{th}; and

$V_1>V+|V_{th}|$, and $V_2=V_1-|V_{th}|$ are satisfied when the polarity of the transistor is p-channel and its threshold value is V_{th}.

5. A semiconductor device as claimed in any one of claims 1 to 3, characterized in that:

the rectifying device uses a diode; and

$V_1>V+V_{th}$, and $V_2=V_1+V_{th}$, or $V_1<V-|V_{th}|$, and $V_2=V_1-|V_{th}|$ are satisfied when the threshold value of the diode is V_{th}.

6. A semiconductor device comprising pixels providing a light emitting device, characterized in that:

the pixel has:

a source signal line;

first and second gate signal lines;

an electric current supply line;

first to fourth transistors; and

the light emitting device;

a gate electrode of the first transistor is electrically connected to the first gate signal line;

a first electrode of the first transistor is electrically connected to the source signal line;

a second electrode of the first transistor is electrically connected to a first electrode of the second transistor;

a gate electrode of the second transistor is electrically connected to a second electrode of the second transistor, a first electrode of the third transistor, and a gate electrode of the fourth transistor;

a gate electrode of the third transistor is electrically connected to the second gate signal line;

a first electrode of the fourth transistor is electrically connected to the electric current supply line; and

a second electrode of the fourth transistor is electrically connected to a first electrode of the light emitting device.

7. A semiconductor device comprising pixels providing a light emitting device, characterized in that:

the pixel has:

a source signal line;

a gate signal line;

an electric current supply line;

first to fourth transistors; and

the light emitting device;

a gate electrode of the first transistor is electrically connected to the gate signal line;

a first electrode of the first transistor is electrically connected to the source signal line;

a second electrode of the first transistor is electrically connected to a first electrode of the second transistor;

a gate electrode of the second transistor is electrically connected to a second electrode of the second transistor, a first electrode of the third transistor, and a gate electrode of the fourth transistor;

a gate electrode of the third transistor is electrically connected to the gate signal line of said pixel in a row scanned at least one row previously;

a first electrode of the fourth transistor is electrically connected to the electric current supply line; and

a second electrode of the fourth transistor is electrically connected to a first electrode of the light emitting device.

8. A semiconductor device comprising pixels providing a light emitting device, characterized in that:

the pixel has:

a source signal line;

first and second gate signal lines;

an electric current supply line;

first to fourth transistors; and

the light emitting device;

a gate electrode of the first transistor is electrically connected to the first gate signal line;

a first electrode of the first transistor is electrically connected to a gate electrode and a first electrode of the second transistor;

a second electrode of the first transistor is electrically connected to a first electrode of the third transistor and a gate electrode of the fourth transistor;

a second electrode of the second transistor is electrically connected to the source signal line;

a gate electrode of the third transistor is electrically connected to the second gate signal line;

a first electrode of the fourth transistor is electrically connected to the electric current supply line; and

a second electrode of the fourth transistor is electrically connected to a first electrode of the light emitting device.

9. A semiconductor device comprising pixels providing a light emitting device, characterized in that:

the pixel has:

a source signal line;

first and second gate signal lines;

an electric current supply line;

first to fourth transistors; and

the light emitting device;

a gate electrode of the first transistor is electrically connected to the first gate signal line;

a first electrode of the first transistor is electrically connected to a gate electrode of the second transistor, a first electrode of the second transistor, and a first electrode of the third transistor;

a second electrode of the first transistor is electrically connected to a gate electrode of the fourth transistor;

a gate electrode of the third transistor is electrically connected to the second gate signal line;

a first electrode of the fourth transistor is electrically connected to the electric current supply line; and

a second electrode of the fourth transistor is electrically connected a first electrode of the light emitting device.

10. A semiconductor device comprising pixels providing a light emitting device, characterized in that:

the pixel has:

a source signal line;

a gate signal line;

an electric current supply line;

first to fourth transistors; and

the light emitting device;

a gate electrode of the first transistor is electrically connected to the first gate signal line;

a first electrode of the first transistor is electrically connected to a gate electrode of the second transistor, a first electrode of the second transistor, and a first electrode of the third transistor;

a second electrode of the first transistor is electrically connected to a gate electrode of the fourth transistor;

a gate electrode of the third transistor is electrically connected to the gate signal line of said pixel in a row scanned at least one row previously;

a first electrode of the fourth transistor is electrically connected to the electric current supply line; and

a second electrode of the fourth transistor is electrically connected a first electrode of the light emitting device.

11. A semiconductor device as claimed in any one of claims 6 to 10, characterized in that the second electrode of the third transistor of one pixel is electrically connected to a reset electric power source line.

12. A semiconductor device as claimed in any one of claims 6 to 10, characterized in that the second electrode of the third transistor of one pixel is electrically connected to any one of the gate signal lines included in any of the pixels scanned in a row different from the row including the one pixel.

13. A semiconductor device comprising pixels providing a light emitting device, characterized in that:

the pixel has:

a source signal line;

first and second gate signal lines;

an electric current supply line;

first to fourth transistors; and

the light emitting device;

a gate electrode of the first transistor is electrically connected to the first gate signal line;

a first electrode of the first transistor is electrically connected to the source signal line;

a second electrode of the first transistor is electrically connected to a first electrode of the second transistor and a first electrode of the third transistor;

a gate electrode of the second transistor is electrically connected to a second electrode of the second transistor, a second electrode of the third transistor, and a gate electrode of the fourth transistor;

a first electrode of the fourth transistor is electrically connected to the electric current supply line; and

a second electrode of the fourth transistor is electrically connected a first electrode of the light emitting device.

14. A semiconductor device comprising pixels providing a light emitting device, characterized in that:

the pixel has:

a source signal line;

first and second gate signal lines;

an electric current supply line;

first to third transistors;

capacitive means; and

the light emitting device;

a gate electrode of the first transistor is electrically connected to the first gate signal line;

a first electrode of the first transistor is electrically connected to the source signal line;

a second electrode of the first transistor is electrically connected to a first electrode of the second transistor;

a gate electrode of the second transistor is electrically connected to a second electrode of the second transistor and a gate electrode of the third transistor;

a first electrode of the third transistor is electrically connected to the electric current supply line;

a second electrode of the third transistor is electrically connected to a first electrode of the light emitting device;

a first electrode of the capacitive means is electrically connected to a gate electrode of the third transistor; and

a second electrode of the capacitive means is electrically connected to the second gate signal line.

15. A semiconductor device comprising pixels providing a light emitting device, characterized in that:

the pixel has:

a source signal line;

first and second gate signal lines;

an electric current supply line;

first to third transistors;

a diode; and

the light emitting device;

a gate electrode of the first transistor is electrically connected to the first gate signal line;

a first electrode of the first transistor is electrically connected to the source signal line;

a second electrode of the first transistor is electrically connected to a first electrode of the second transistor;

a gate electrode of the second transistor is electrically connected to a second electrode of the second transistor and a gate electrode of the third transistor;

a first electrode of the third transistor is electrically connected to the electric current supply line;

a second electrode of the third transistor is electrically connected to a first electrode of the light emitting device;

a first electrode of the diode is electrically connected to a gate electrode of the third transistor;

a second electrode of the diode is electrically connected to the second gate signal line; and

electric current develops in only one direction when the electric potential of the second gate signal line is changed, either from the first electrode of the diode to the second electrode of the diode, or from the second electrode of the diode to the first electrode of the diode.

16. A semiconductor device comprising pixels providing a light emitting device, characterized in that:

the pixel has:

a source signal line;

first to third gate signal lines;

an electric current supply line;

first to fifth transistors; and

the light emitting device;

a gate electrode of the first transistor is electrically connected to the first gate signal line;

a first electrode of the first transistor is electrically connected to the source signal line;

a second electrode of the first transistor is electrically connected to a first electrode of the second transistor;

a gate electrode of the second transistor is electrically connected to a second electrode of the second transistor, a first electrode of the third transistor, and a gate electrode of the fourth transistor;

a gate electrode of the third transistor is electrically connected to the second gate signal line;

a first electrode of the fourth transistor is electrically connected to the electric current supply line;

a second electrode of the fourth transistor is electrically connected to a first electrode of the light emitting device;

a gate electrode of the fifth transistor is electrically connected to the third gate signal line;

a first electrode of the fifth transistor is electrically connected to the electric current supply line;

a second electrode of the fifth transistor is electrically connected the gate electrode of the fourth transistor; and

the voltage between the gate and the source of the fourth transistor is set to zero by the fifth transistor becoming conductive.

17. A semiconductor device comprising pixels providing a light emitting device, characterized in that:

the pixel has:

a source signal line;

first and second gate signal lines;

an electric current supply line;

first to fifth transistors; and

the light emitting device;

a gate electrode of the first transistor is electrically connected to the first gate signal line;

a first electrode of the first transistor is electrically connected to the source signal line;

a second electrode of the first transistor is electrically connected to a first electrode of the second transistor;

a gate electrode of the second transistor is electrically connected to a second electrode of the second transistor, a first electrode of the third transistor, and a gate electrode of the fourth transistor;

a gate electrode of the third transistor is electrically connected to the gate signal line included in said pixel in a row scanned at least one row previously;

a first electrode of the fourth transistor is electrically connected to the electric current supply line;

a second electrode of the fourth transistor is electrically connected to a first electrode of the light emitting device;

a gate electrode of the fifth transistor is electrically connected to the second gate signal line;

a first electrode of the fifth transistor is electrically connected to the electric current supply line;

a second electrode of the fifth transistor is electrically connected the gate electrode of the fourth transistor; and

the voltage between the gate and the source of the fourth transistor is set to zero by the fifth transistor becoming conductive.

18. A semiconductor device comprising pixels providing a light emitting device, characterized in that:

the pixel has:

a source signal line;

first to third gate signal lines;

an electric current supply line;

first to fifth transistors; and

the light emitting device;

a gate electrode of the first transistor is electrically connected to the first gate signal line;

a first electrode of the first transistor is electrically connected to the source signal line;

a second electrode of the first transistor is electrically connected to a first electrode of the second transistor;

a gate electrode of the second transistor is electrically connected to a second electrode of the second transistor, a first electrode of the third transistor, and a gate electrode of the fourth transistor;

a gate electrode of the third transistor is electrically connected to the second gate signal line;

a first electrode of the fourth transistor is electrically connected to the electric current supply line;

a second electrode of the fourth transistor is electrically connected to a first electrode of the fifth transistor;

a gate electrode of the fifth transistor is electrically connected to the third gate signal line;

a second electrode of the fifth transistor is electrically connected to a second electrode of the light emitting device; and

electric current supplied to the light emitting device from the electric current supply line is cut off by the fifth transistor becoming non-conductive.

19. A semiconductor device comprising pixels providing a light emitting device, characterized in that:

the pixel has:

a source signal line;

first to third gate signal lines;

an electric current supply line;

first to fifth transistors; and

the light emitting device;

a gate electrode of the first transistor is electrically connected to the first gate signal line;

a first electrode of the first transistor is electrically connected to the source signal line;

a second electrode of the first transistor is electrically connected to a first electrode of the second transistor;

a gate electrode of the second transistor is electrically connected to a second electrode of the second transistor, a first electrode of the third transistor, and a gate electrode of the fourth transistor;

a gate electrode of the third transistor is electrically connected to said first gate signal line included in said pixel in a row scanned at least one row previously;

a first electrode of the fourth transistor is electrically connected to the electric current supply line;

a second electrode of the fourth transistor is electrically connected to a first electrode of the fifth transistor;

a gate electrode of the fifth transistor is electrically connected to the third gate signal line;

a second electrode of the fifth transistor is electrically connected to a second electrode of the light emitting device; and

electric current supplied to the light emitting device from the electric current supply line is cut off by the fifth transistor becoming non-conductive.

20. A semiconductor device as claimed in any one of claims 16 to 19, characterized in that the second electrode of the third transistor of one pixel is electrically connected to a reset electric power source line.

21. A semiconductor device as claimed in any one of claims 16 to 19, characterized in that the second electrode of the third transistor of one pixel is electrically connected to any one of the gate signal lines included in any pixel of any row that does not include the one pixel.

22. A semiconductor device comprising pixels providing a light emitting device, characterized in that:

the pixel has:

a source signal line;

first and second gate signal lines;

an electric current supply line;

first to fifth transistors; and

the light emitting device;

a gate electrode of the first transistor is electrically connected to the first gate signal line;

a first electrode of the first transistor is electrically connected to the source signal line;

a second electrode of the first transistor is electrically connected to a first electrode of the second transistor;

a gate electrode of the second transistor is electrically connected to a second electrode of the second transistor, a first electrode of the third transistor, and a gate electrode of the fourth transistor;

a gate electrode of the third transistor is electrically connected to said first gate signal line included in said pixel in a row scanned at least one row previously;

a second electrode of the third transistor is electrically connected to the second gate signal line;

a first electrode of the fourth transistor is electrically connected to the electric current supply line;

a second electrode of the fourth transistor is electrically connected to a first electrode of the fifth transistor;

a gate electrode of the fifth transistor is electrically connected to the second gate signal line;

a second electrode of the fifth transistor is electrically connected to a first electrode of the light emitting device; and

electric current supplied to the light emitting device from the electric current supply line is cut off by the fifth transistor becoming non-conductive.

23. A semiconductor device comprising pixels providing a light emitting device, characterized in that:

the pixel has:

a source signal line;

first and second gate signal lines;

an electric current supply line;

first to fifth transistors; and

the light emitting device;

a gate electrode of the first transistor is electrically connected to the first gate signal line;

a first electrode of the first transistor is electrically connected to the source signal line;

a second electrode of the first transistor is electrically connected to a first electrode of the second transistor;

a gate electrode of the second transistor is electrically connected to a second electrode of the second transistor, a first electrode of the third transistor, and a gate electrode of the fourth transistor;

a gate electrode of the third transistor is electrically connected to said first gate signal line included in said pixel in a row scanned at least one row previously;

a second electrode of the third transistor is electrically connected to the first gate signal line;

a first electrode of the fourth transistor is electrically connected to the electric current supply line;

a second electrode of the fourth transistor is electrically connected to a first electrode of the fifth transistor;

a gate electrode of the fifth transistor is electrically connected to the second gate signal line;

a second electrode of the fifth transistor is electrically connected to a first electrode of the light emitting device; and

electric current supplied to the light emitting device from the electric current supply line is cut off by the fifth transistor becoming non-conductive.

24. A semiconductor device as claimed in any one of claims 6 to 10, **13** to **19** and **23**, characterized in that:

the semiconductor device includes storage capacitive means;

a first electrode of the storage capacitive means is electrically connected to the second electrode of the first transistor;

a fixed electric potential is imparted to a second electrode of the storage capacitive means; and

the electric potential of the second electrode of the first transistor is stored.

25. A semiconductor device as claimed in any one of claims 6 to 10, **13** to **19** and **23**, characterized in that:

the semiconductor device includes storage capacitive means;

a first electrode of the storage capacitive means is electrically connected to a gate electrode of the fourth transistor;

a fixed electric potential is imparted to a second electrode of the storage capacitive means; and

the electric potential applied to the gate electrode of the fourth transistor is stored.

26. A method of driving a semiconductor device, the semiconductor device comprising:

a switching device; and

a rectifying device,

the semiconductor device being characterized in that:

a first signal V_1 is input to a first electrode of the rectifying device;

a second electrode of the rectifying device is electrically connected to a first electrode of the switching device;

a certain electric potential V is imparted to a second electrode of the switching device,

the method of driving the semiconductor device being characterized by comprising:

a first step of making the switching device conductive, thus setting the electric potential of the second electrode of the rectifying device to V;

a second step of making the switching device non-conductive, thus making the voltage between both the electrodes of the rectifying device converge to a threshold value V_{th} from the state of the first step; and

a third step of storing the threshold value V_{th} and obtaining an offset signal V_2, which is equal to the signal V_1 offset by the threshold value V_{th}, from the second electrode of the rectifying device.

27. A method of driving a semiconductor device, the semiconductor device comprising:

first and second switching devices; and

a rectifying device,

the semiconductor device being characterized in that:

a first signal V_1 is input to a first electrode of the first switching device;

a second electrode of the first switching device is electrically connected to a first electrode of the rectifying device;

a second electrode of the rectifying device is electrically connected to a first electrode of the second switching device; and

a certain electric potential V is imparted to a second electrode of the second switching device,

the method of driving the semiconductor device being characterized by comprising:

a first step of making the second switching device conductive, thus setting the electric potential of the second electrode of the rectifying device to V;

a second step of further making the first switching device conductive, thus setting the electric potential of the first electrode of the rectifying device to V_1 from the state of the first step;

a third step of making the second switching device non-conductive, thus making the voltage between both the electrodes of the rectifying device converge to a threshold value V_{th} from the state of the second step;

a fourth step of further making the first switching device non-conductive, thus storing the threshold value V_{th} and obtaining an offset signal V_2, which is equal to the signal V_1 offset by the threshold value V_{th}, from the second electrode of the rectifying device, from the state of the third step.

28. A method of driving a semiconductor device, the semiconductor device comprising first and second rectifying devices, the semiconductor device being characterized in that:

a first signal V_1 is input to a first electrode of the rectifying device;

a second electrode of the first rectifying device is electrically connected to a first electrode of the second rectifying device; and

a certain electric potential V is imparted to a second electrode of the second rectifying device,

the method of driving the semiconductor device being characterized by comprising:

a first step of making the electric potential of the second electrode of the second rectifying device go from V to V_0 (where $V_0>V$) when $V_1>(V-|V_{th}|)$, thus cutting off electric current flowing in the second rectifying device; and

a second step of obtaining an offset signal V_2, which is equal to the signal V_0 offset by the threshold value V_{th}, from the second electrode of the first rectifying device.

29. A method of driving a semiconductor device according to any one of claims 26 to 28, characterized in that:

the rectifying device uses a transistor having a connection between its gate and its drain;

$V_1+V_{th}<V$, and $V_2=V_1+V_{th}$ are satisfied when the polarity of the transistor is n-channel and its threshold value is V_{th}; and

$V_1>V+|V_{th}|$, and $V_2=V_1-|V_{th}|$ are satisfied when the polarity of the transistor is p-channel and its threshold value is V_{th}.

30. A method of driving a semiconductor device according to any one of claims 26 to 28, characterized in that:

the rectifying device uses a diode; and

$V_1>V+V_{th}$, and $V_2=V_1+V_{th}$, or $V_1<V-|V_{th}|$, and $V_2=V_1-|V_{th}|$ are satisfied when the threshold value of the diode is V_{th}.

31. An electronic equipment characterized by using the semiconductor device as claimed in any one of **1** to **10**, **13** to **19**, **23** and **26**, or the method of driving a semiconductor device according to claim 22.

* * * * *