UNITED STATES INTERNATIONAL TRADE COMMISSION

Washington, D.C.

In the Matter of **CERTAIN ACTIVE MATRIX ORGANIC LIGHT-EMITTING DIODE DISPLAY PANELS AND MODULES FOR MOBILE DEVICES, AND COMPONENTS THEREOF**	**Inv. No. 337-TA-1351**

ORDER NO. 28: CONSTRUING CERTAIN CLAIM TERMS

(September 11, 2023)

I. INTRODUCTION 1
II. IN GENERAL 3
III. RELEVANT LAW 3
IV. THE ASSERTED PATENTS 6
A. The ’593 Patent 6
B. The ’599 Patent 7
C. The ’578 Patent 9
V. LEVEL OF ORDINARY SKILL IN THE ART 12
A. The ’593 Patent 12
B. The ’599 Patent 12
C. The ’578 Patent 13
VI. CLAIM CONSTRUCTION 13
A. Construction of Agreed-Upon Claim Terms 13
B. Construction of the Disputed Claim Terms 15
1. “node” 15
2. “an outputting unit have a first node and a second node, the outputting unit to supply a voltage of a first power supply to the output terminal according to a voltage applied to the first node and a signal of the third input terminal to the output terminal according to a voltage applied to the second node” 18
3. “a first driver to control the voltage of the second node in accordance with signals of the first input terminal, the second input terminal, and the third input terminal” 25
4. “a second driver to control the voltage of the first node in accordance with the signal of the second input terminal and the voltage of the second node” 33
5. “fifth transistor” and “sixth transistor” 37
6. “grounded” 43
7. “virtual quadrangle” 48
8. “wherein a shortest distance between any two of the group of four neighboring ones of the plurality of first pixels is greater than a shortest distance between the only one of the second pixels and the third pixels included in the virtual quadrangle and a nearest one of the second pixels or the third pixels in a direction perpendicular to any side of the virtual quadrangle” 54

I. INTRODUCTION

This Investigation was instituted by the Commission on February 3, 2023 to determine whether the importation, sale for importation, or sale within the United States after importation of certain active matrix organic light-emitting diode display panels and modules for mobile devices, and components thereof violates section 337 of the Tariff Act of 1930, as amended, due to infringement of U.S. Patent Nos. 9,818,803, 10,854,683, 7,414,599 ("the '599 Patent"), and 9,330,593 ("the '593 patent"). *See* 88 Fed. Reg. 7,463 (Feb. 3, 2023). Samsung Display Co., Ltd. ("SDC") is the complainant. The Notice of Institution named the following entities as respondents: Apt-Ability, LLC d/b/a MobileSentrix; Mobile Defenders, LLC; Injured Gadgets, LLC; Group Vertical, LLC; Electronics Universe, Inc. d/b/a Fixez.com and Repairs Universe, LLC; LCTech International Inc. d/b/a SEGMobile.com; Sourcely Plus, LLC; eTech Parts Plus, LLC; Parts4Cells Inc.; Wholesale Gadget Parts, Inc.; Captain Mobile Parts, Inc.; DFW Imports LLC d/b/a DFW Cellphone and Parts; Phone LCD Parts LLC; Parts4LCD; Mengtor Inc.; and Gadgetfix Corp. *Id.* at 7,464. The Commission Investigative Staff ("Staff") is also a party to this Investigation.

On March 13, 2023, I granted Mianyang BOE Optoelectronics Technology Co., Ltd.'s ("Mianyang BOE") motion to intervene as a respondent. Order No. 7; *not reviewed*, Comm'n Notice (Mar. 22, 2023).

On March 28, 2023, I granted SDC's motion to amend the complaint and investigation to add allegations of infringement related to U.S. Patent No. 11,595,578 ("the '578 patent) (collectively with the other patents, "the Asserted Patents"). Order No. 8, *not reviewed,* Comm'n Notice (Apr. 20, 2023).

I have also issued a series of initial determinations finding certain respondents in default. Specifically, on May 10, 2023, I issued an Initial Determination finding Respondent Captain Mobile Parts in default. Order No. 16, *not reviewed*, Comm'n Notice (June 7, 2023). On June 27,

2023, I issued an Initial Determination finding Respondents Group Vertical, LLC, Sourcely Plus, LLC, and Mengtor, Inc. in default. Order No. 23, *not reviewed*, Comm'n Notice (July 20, 2023). On July 19, 2023, I issued an Initial Determination finding Electronics Universe d/b/a Fixex.com and Repairs Universe, Inc. and LCTech International Inc. d/b/a SEGMobile.com in default. Order No. 25, *not reviewed*, Comm'n Notice (Aug. 18, 2023). Finally, on August 8, 2023, I issued an Initial Determination finding Respondents Parts4Cells Inc., DFW Imports LLC d/b/a DFW Cellphone and Parts and Gadgetfix Corp., and eTech Parts Plus, LLC in default. Order No. 27, *not reviewed*, Comm'n Notice (Aug. 30, 2023).

The parties have proposed terms from three of the Asserted Patents for construction. A *Markman* hearing was held on June 30, 2023. [1] After the hearing and pursuant to the Ground Rules, the parties submitted an updated Joint Claim Construction Chart.[2] The parties also filed a document indicating that they have agreed to constructions for nineteen terms and that there are an additional eleven terms that they dispute but are not presenting for construction during the

[1] Only three respondents participated in the *Markman* phase of this Investigation: (1) Mianyang BOE; (2) Apt-Ability, LLC d/b/a MobileSentrix; and (3) Mobile Defenders LLC. For purposes of this order, these entities are collectively referred to as "Respondents." I also note that only Mianyang BOE identified terms for construction and submitted an expert report on claim construction. The remaining two respondents joined Minayang BOE's position a few days before opening claim construction briefs were due.

[2] For convenience, the briefs and chart submitted by the parties are referred to hereafter as:

CMIB	SDC'S Initial *Markman* Brief
CMRB	SDC's Reply *Markman* Brief
RMIB	Respondents' Initial *Markman* Brief
RMRB	Respondents' Reply *Markman* Brief
SMIB	Staff's Initial *Markman* Brief
SMRB	Staff's Reply *Markman* Brief
JC	Updated Joint Proposed Claim Construction Chart

Markman phase of the Investigation. *See* The Parties' Joint Submission Regarding Agreed Upon and Remaining Disputed Claim Terms ("Joint Submission").

II. IN GENERAL

The claim terms construed in this Order are done so for the purposes of this section 337 Investigation. Those terms not in dispute need not be construed. *See Vanderlande Indus. Nederland BV v. Int'l Trade Comm'n*, 366 F.3d 1311, 1323 (Fed. Cir. 2004) (noting that the administrative law judge need only construe disputed claim terms).

III. RELEVANT LAW

"An infringement analysis entails two steps. The first step is determining the meaning and scope of the patent claims asserted to be infringed. The second step is comparing the properly construed claims to the device accused of infringing." *Markman v. Westview Instruments, Inc.*, 52 F.3d 967, 976 (Fed. Cir. 1995) (*en banc*) (internal citations omitted), *aff'd*, 517 U.S. 370 (1996). Claim construction is a "matter of law exclusively for the court." *Id.* at 970-71. "The construction of claims is simply a way of elaborating the normally terse claim language in order to understand and explain, but not to change, the scope of the claims." *Embrex, Inc. v. Serv. Eng'g Corp.*, 216 F.3d 1343, 1347 (Fed. Cir. 2000).

Claim construction focuses on the intrinsic evidence, which consists of the claims themselves, the specification, and the prosecution history. *See Phillips v. AWH Corp.*, 415 F.3d 1303, 1314 (Fed. Cir. 2005) (*en banc*); *see also Markman*, 52 F.3d at 979. As the Federal Circuit in *Phillips* explained, courts must analyze each of these components to determine the "ordinary and customary meaning of a claim term" as understood by a person of ordinary skill in the art at the time of the invention. 415 F.3d at 1313. "Such intrinsic evidence is the most significant source of the legally operative meaning of disputed claim language." *Bell Atl. Network Servs., Inc. v. Covad Commc'ns Grp., Inc.*, 262 F.3d 1258, 1267 (Fed. Cir. 2001).

"It is a 'bedrock principle' of patent law that 'the claims of a patent define the invention to which the patentee is entitled the right to exclude.'" *Phillips*, 415 F.3d at 1312 (quoting *Innova/Pure Water, Inc. v. Safari Water Filtration Sys., Inc.*, 381 F.3d 1111, 1115 (Fed. Cir. 2004)). "Quite apart from the written description and the prosecution history, the claims themselves provide substantial guidance as to the meaning of particular claims terms." *Id*. at 1314; *see also Interactive Gift Express, Inc. v. Compuserve Inc.*, 256 F.3d 1323, 1331 (Fed. Cir. 2001) ("In construing claims, the analytical focus must begin and remain centered on the language of the claims themselves, for it is that language that the patentee chose to use to 'particularly point[ ] out and distinctly claim[ ] the subject matter which the patentee regards as his invention.'"). The context in which a term is used in an asserted claim can be "highly instructive." *Phillips*, 415 F.3d at 1314. Additionally, other claims in the same patent, asserted or unasserted, may also provide guidance as to the meaning of a claim term. *Id.*

The specification "is always highly relevant to the claim construction analysis. Usually, it is dispositive; it is the single best guide to the meaning of a disputed term." *Id.* at 1315 (quoting *Vitronics Corp. v. Conceptronic, Inc.*, 90 F.3d 1576, 1582 (Fed. Cir. 1996)). "[T]he specification may reveal a special definition given to a claim term by the patentee that differs from the meaning it would otherwise possess. In such cases, the inventor's lexicography governs." *Id.* at 1316. "In other cases, the specification may reveal an intentional disclaimer, or disavowal, of claim scope by the inventor." *Id.* As a general rule, however, the particular examples or embodiments discussed in the specification are not to be read into the claims as limitations. *Id.* at 1323. In the end, "[t]he construction that stays true to the claim language and most naturally aligns with the patent's description of the invention will be . . . the correct construction." *Id.* at 1316 (quoting *Renishaw PLC v. Marposs Societa´ per Azioni*, 158 F.3d 1243, 1250 (Fed. Cir. 1998)).

In addition to the claims and the specification, the prosecution history should be examined, if in evidence. *Id.* at 1317; *see also Liebel-Flarsheim Co. v. Medrad, Inc.,* 358 F.3d 898, 913 (Fed. Cir. 2004). The prosecution history can "often inform the meaning of the claim language by demonstrating how the inventor understood the invention and whether the inventor limited the invention in the course of prosecution, making the claim scope narrower than it would otherwise be." *Phillips*, 415 F.3d at 1317; *see also Chimie v. PPG Indus. Inc*., 402 F.3d 1371, 1384 (Fed. Cir. 2005) ("The purpose of consulting the prosecution history in construing a claim is to 'exclude any interpretation that was disclaimed during prosecution.'").

When the intrinsic evidence does not establish the meaning of a claim, then extrinsic evidence (*i.e.*, all evidence external to the patent and the prosecution history, including dictionaries, inventor testimony, expert testimony, and learned treatises) may be considered. *Phillips*, 415 F.3d at 1317. Extrinsic evidence is generally viewed as less reliable than the patent itself and its prosecution history in determining how to define claim terms. *Id.* at 1317. "The court may receive extrinsic evidence to educate itself about the invention and the relevant technology, but the court may not use extrinsic evidence to arrive at a claim construction that is clearly at odds with the construction mandated by the intrinsic evidence." *Elkay Mfg. Co. v. Ebco Mfg. Co.*, 192 F.3d 973, 977 (Fed. Cir. 1999).

If, after a review of the intrinsic and extrinsic evidence, a claim term remains ambiguous, the claim should be construed so as to maintain its validity. *Phillips*, 415 F.3d at 1327. Claims, however, cannot be judicially rewritten in order to fulfill the axiom of preserving their validity. *See Rhine v. Casio, Inc.*, 183 F.3d 1342, 1345 (Fed. Cir. 1999). Thus, "if the only claim construction that is consistent with the claim's language and the written description renders the claim invalid, then the axiom does not apply and the claim is simply invalid." *Id.*

A claim must also be definite. Pursuant to 35 U.S.C. § 112, second paragraph: "The specification shall conclude with one or more claims particularly pointing out and distinctly claiming the subject matter which the applicant regards as his invention." 35 U.S.C. § 112, ¶ 2. In Nautilus*, Inc. v. Biosig Instruments, Inc.*, 134 S. Ct. 2120 (2014), the Supreme Court held that § 112, ¶ 2 requires "that a patent's claims, viewed in light of the specification and prosecution history inform those skilled in the art about the scope of the invention with reasonable certainty." (*Id.* at 2129.) A claim is required to "provide objective boundaries for those of skill in the art," and a claim term is indefinite if it "might mean several different things and no informed and confident choice is among the contending definitions." *Interval Licensing LLC v. AOL, Inc.*, 766 F.3d 1364, 1371 (Fed. Cir. 2014). A patent claim that is indefinite is invalid. 35 U.S.C. § 282(b)(3)(A).

IV. THE ASSERTED PATENTS

A. The '593 Patent

The '593 patent, entitled "Stage Circuit and Organic Light Emitting Display Using the Same" issued on May 3, 2016 to Hwan-Soo Jang. The '593 patent is assigned to SDC. The '593 patent generally relates to "stage circuit structures that . . . have a reduced number of transistors and can output scan signals based on first and second clock signals and the output signal of a previous stage circuit." Am. Comp. at ¶ 83.

The '593 patent has 27 claims. Claims 1-3, 6-8, and 14-22 have been asserted in this Investigation. The claims which include disputed terms read as follows (with the first instance of the disputed terms highlighted in **bold**):

1. A stage circuit having a first input terminal, a second input terminal, a third input terminal, and an output terminal, the stage circuit comprising:

   an outputting unit having a first node and a second node, the outputting unit to supply a voltage of a first power supply to the output terminal according to a voltage applied to the first node and a signal of the third input terminal to the output terminal according to a voltage applied to the second node;

a first driver to control the voltage of the second node in accordance with signals of the first input terminal, the second input terminal, and the third input terminal; and

a second driver to control the voltage of the first node in accordance with the signal of the second input terminal and the voltage of the second node, wherein

the signal of the third input terminal directly controls an on/off operation of a transistor, the transistor included in the first driver.

15. An organic light emitting display, comprising:

pixels positioned in regions partitioned by scan lines and data lines;

a data driver for supplying data signals to the pixels through the data lines; and

a scan driver for supplying scan signals to the pixels through the scan lines, the scan driver including stage circuits coupled to the scan lines, each of the stage circuits generating a corresponding scan signal of the scan signals and having a first input terminal a second input terminal, a third input terminal, and an output terminal,

wherein each of the stage circuits includes:

an outputting unit having a first node and a second node, the outputting unit to supply a voltage of a first power supply to the output terminal according to a voltage applied to the first node and a signal of the third input terminal to the output terminal according to a voltage applied to the second node,

a first driver to control the voltage of the second node in accordance with signals of the first input terminal, the second input terminal, and the third input terminal, and

a second driver to control the voltage of the first node in accordance with the signal of the second input terminal and the voltage of the second node, wherein

the signal of the third input terminal directly controls an on/off operation of a transistor, the transistor included in the first driver.

B. The ’599 Patent

The ’599 patent, entitled “Organic Light Emitting Device Pixel Circuit and Driving Method Therefor,” issued on August 19, 2008 to Ho-Kyoon Chung, Yang-Wan Kim, Choon-Yul Oh, Oh-Kyong Kwon, and Sang-Moo Choi. The ’599 patent is assigned to SDC. Am. Comp. at ¶ 71. The ’599 patent generally relates to “pixel circuits for an organic light emitting device such as a mobile

phone that detect and self-compensate for these variations, allowing the device display to realize high gradation representation and improving the overall image quality." *Id.* at ¶ 75.

The '599 patent has 18 claims. Claims 1-18 have been asserted in this Investigation. The claims which include disputed terms read as follows (with the first instance of the disputed terms highlighted in **bold**):

1. A pixel circuit in an organic light emitting device, comprising:

   a first transistor for delivering a data signal voltage in response to a current scan line signal;

   a second transistor for generating a driving current depending on the data signal voltage delivered through the first transistor;

   a third transistor for detecting and self-compensating threshold voltage deviation in the second transistor;

   a fifth transistor for providing a power supply voltage for the second transistor in response to a current light-emitting signal;

   a sixth transistor which is coupled in series between the second transistor and an electroluminescent element and for providing the driving current for the electroluminescent element through the second transistor in response to the current light-emitting signal; and

   a capacitor for storing the data signal voltage delivered to the second transistor,

   wherein the electroluminescent element emits light corresponding to the driving current generated through the second transistor.

15. A pixel circuit in an organic light emitting device, comprising:

   a first transistor including a gate to which a current scan signal is applied, and a source to which a data signal voltage is applied;

   a second transistor whose source is coupled to a drain of the first transistor;

   a third transistor whose drain and source are connected between a gate and a drain of the second transistor;

   a fourth transistor including a gate to which a current light-emitting signal is applied, a source to which a power supply voltage is applied, and a drain coupled to the source of the second transistor;

a fifth transistor including a gate to which the current light-emitting signal is applied, a source coupled to the drain of the second transistor, and a drain coupled to one terminal of an electroluminescent element;

the electroluminescent element having the one terminal coupled to the drain of the fifth transistor and the other terminal **grounded**; and

a capacitor in which one terminal of the capacitor is coupled to the gate of the second transistor and a power supply voltage is applied to the other terminal of the capacitor.

17. A pixel circuit in an organic light emitting device having a plurality of data lines, a plurality of scan lines, a plurality of power lines, and a plurality of pixels each connected to one associated data line, scan line and power line of the plurality of data lines, scan lines and power lines, each pixel comprising:

a first transistor including a gate to which a current scan signal to be applied to the associated scan line is applied, and a source to which a data signal voltage from the data line is applied;

a second transistor whose source is coupled to a drain of the first transistor;

a third transistor whose drain and source are connected between a gate and a drain of the second transistor, respectively;

a fourth emitting transistor including a gate to which a current light-emitting signal is applied, a source to which a power supply voltage from the power line is applied, and a drain coupled to the source of the second transistor;

a fifth transistor including a gate to which the current light-emitting signal is applied, and a source coupled to the drain of the second transistor;

an electroluminescent element including one terminal coupled to the drain of the fifth transistor and the other terminal grounded; and

a capacitor including one terminal coupled to the gate of the second transistor, and the other terminal to which the power supply voltage from the power line is applied.

C. The ’578 Patent

The ’578 patent, entitled “Pixel Arrangement Structure for Organic Light Emitting Display Device” issued on February 28, 2023 to Sang-Shin Lee. The ’578 patent is assigned to SDC. The ’578 patent generally relates to “an organic light emitting diode (OLED) display such as that used in mobile devices.” Am. Comp. at ¶ 88. Specifically, the ’578 patent teaches “pixel arrangement

structures for an OLED display where the pixels are arranged according to . . . patterns and layouts in which the pixels are formed in specified locations, formed to have differing surface areas, separated from each other by defined lengths, and/or formed to have particular shapes." *Id.* at ¶ 91.

The '578 patent has 92 claims. Claims 1-6, 10, 12, 17, 19, 21-23, 40-47, and 51-52 have been asserted in this Investigation. The claims which include disputed terms read as follows (with the first instance of the disputed terms highlighted in **bold**):

23. The pixel arrangement structure of claim 1, wherein: the plurality of second pixels comprises a first second pixel, a second second pixel, and a third second pixel;

each of the second pixels is configured to produce light having a second color;

the plurality of third pixels comprises a first third pixel, a 10 second third pixel, and a third third pixel;

each of the third pixels is configured to produce light having a third color that is different from the second color;

the first second pixel, the first third pixel, the second second pixel, and the second third pixel form a first **virtual quadrangle**,

the second second pixel, the second third pixel, the third second pixel, and the third third pixel form a second 20 virtual quadrangle;

the plurality of first pixels comprises a first first pixel in the first virtual quadrangle and a second first pixel in the second virtual quadrangle;

the first and second virtual quadrangles share a common side having endpoints at a common first vertex and a common second vertex of the first and second virtual quadrangles.

the second second pixel is arranged at the common first vertex, and the second third pixel is arranged at the common second vertex;

the plurality of first pixels further comprises a third first pixel;

the first first pixel and the third first pixel are located at opposite sides of the second second pixel;

each of the first pixels is configured to produce light having a first color that is different from the second color and the third color; and

the second pixels are larger in area than the first pixels and 40 the third pixels.

45. A pixel arrangement structure of an organic light emitting diode (OLED) display, the pixel arrangement structure comprising:

a plurality of first pixels, wherein the first pixels have a shape comprising edges;

a plurality of second pixels; and

a plurality of third pixels,

wherein the OLED display comprises a pixel defining layer defining areas of the first pixels, the second pixels, and the third pixels,

wherein the first pixels, the second pixels, and the third pixels are configured to emit different color lights,

wherein only one of the second pixels and the third pixels is included in a virtual quadrangle containing outer edges comprising some of the edges of a group of four neighboring ones of the plurality of first pixels, all portions of all others of the second pixels and the third pixels being outside of the virtual quadrangle, and

wherein a shortest distance between any two of the group of four neighboring ones of the plurality of first pixels is greater than a shortest distance between the only one of the second pixels and the third pixels included in the virtual quadrangle and a nearest one of the second pixels or the third pixels in a direction perpendicular to any side of the virtual quadrangle.

47. The pixel arrangement structure of claim 45, wherein the virtual quadrangle does not cross any other of the first pixels, the second pixels, or the third pixels.

52. The pixel arrangement structure of claim 45, wherein a shortest distance between two parallel edges that are elongated in a first direction or a second direction crossing the first direction from among the edges of one of the group of four neighboring ones of the plurality of first pixels is less than a shortest distance between the one of the group of four neighboring ones of the plurality of first pixels and the only one of the second pixels and the third pixels included in the virtual quadrangle.

V. LEVEL OF ORDINARY SKILL IN THE ART

A. The ’593 Patent

SDC asserts that “a person of ordinary skill in the art of the ’593 patent ‘would have had a relevant technical degree in Electrical Engineering, Computer Engineering, Materials Science, Physics, or the like, and experience in active matrix display design and electroluminescence.’” CMIB at 8 (quoting CMIB Ex. A at ¶ 19).

Respondents did not propose a level of ordinary skill in the art in their briefs. Mianyang BOE’s expert, Dr. Daniel Foty, did opine on the issue in his expert report. According to Dr. Foty, a person of ordinary skill in the art “would have had a Bachelor’s degree in electrical engineering or similar discipline, along with 2-3 years of circuit design experience.” RMIB Ex. 1 at ¶ 11.

I find that SDC’s proposal best reflects the level of skill in the art at the time of the ’593 patent. As SDC’s expert, Dr. Miltiadis Hatalis, explained: “The ’599 and ’593 Patents are directed to active matrix display technologies for organic light-emitting diode displays.” CMIB Ex. A at ¶ 20. It is therefore reasonable to expect one of skill to have specific experience with active matrix display circuitry and electroluminescence. Accordingly, I find that a person of ordinary skill in the art would have had a relevant degree in Electrical Engineering, Computer Engineering, Materials Science, Physics, or the like, and experience in active matrix display design and electroluminescence.

B. The ’599 Patent

SDC asserts that a person of ordinary skill in the art “would have had a relevant technical degree in Electrical Engineering, Computer Engineering, Materials Science, Physics, or the like, and experience in active matrix display design and electroluminescence.’” CMIB at 31 (quoting CMIB Ex. A at ¶ 18).

Respondents did not propose a level of ordinary skill in the art in their briefs. Dr. Foty did, however, opine on the issue in his expert report. According to Dr. Foty, a person of ordinary skill in the art "would have had a Bachelor's degree in electrical engineering or similar discipline, along with 2-3 years of circuit design experience" RMIB Ex. 1 at ¶ 11.

I find that SDC's proposal best reflects the level of skill in the art at the time of the '599 patent for the same reasons as set forth above with respect to the '593 patent. Accordingly, I find that a person of ordinary skill in the art would have had a relevant degree in Electrical Engineering, Computer Engineering, Materials Science, Physics, or the like, and experience in active matrix display design and electroluminescence.

C. The '578 Patent

SDC asserts that a person of ordinary skill in the art "would have had a relevant technical degree in Electrical Engineering, Computer Engineering, Materials Science, Physics, or the like, and experience in electroluminescence and the design of active matrix displays or pixel arrangements for such displays." CMIB at 40. Respondents did not set forth a position with respect to the level of skill in the art for this patent.

I find that SDC's proposal reflects the level of skill in the art at the time of the '578 patent. Accordingly, I find that a person of ordinary skill in the art would have had a relevant degree in Electrical Engineering, Computer Engineering, Materials Science, Physics, or the like, and experience in electroluminescence and the design of active matrix displays or pixel arrangements for such displays.

VI. CLAIM CONSTRUCTION

A. Construction of Agreed-Upon Claim Terms

The parties have agreed to the following constructions:

CLAIM TERM	RELEVANT CLAIMS	PARTIES' AGREED CONSTRUCTION
"current scan line signal"/ "current scan signal"	'599 patent, cls. 1, 7, 14	Plain and ordinary meaning, i.e., "scan signal of the current scan line (i.e., SCAN[n])"
"current light-emitting signal"	'599 patent, cls. 1, 14, 15, 17	Plain and ordinary meaning, i.e., "light emitting signal of the current emission line (i.e., EMI[n])"
"fourth initialization transistor" / "sixth initialization transistor"	'599 patent, cls, 2, 8	Fourth transistor, which is an initialization transistor Sixth transistor, which is an initialization transistor
"scan signal just before the current scan signal" / "scan line just before the associated scan line"	'599 patent, cls. 2, 8, 16, 18	Plain and ordinary meaning, i.e., "scan signal of the immediately previous scan line (i.e., SCAN[n-1])" "the immediately previous scan line (i.e., the (n-1)th scan line)"
"self-compensating threshold voltage deviation in the second transistor" (claim 1) / "the second transistor detects and compensates its threshold voltage deviation in itself" (claim 7) / "self-compensate a threshold voltage of the second transistor" (claim 14)	'599 patent, cls. 1, 7, 14	Plain and ordinary meaning, i.e., "eliminating or nearly eliminating the effect of a threshold voltage deviation of the particular second transistor"
"directly controls"	'593 patent, cls. 1, 15	Plain and ordinary meaning, i.e., "controls with no intervening circuit elements"
"wherein the transistor controls the voltage of the second node according to the on/off operation thereof"	'593 patent, cl. 14	Plain and ordinary meaning, i.e., "wherein the transistor controls the voltage of the second node based on the on/off operation of the transistor"
"each of the stage circuits generating a corresponding scan signal of the scan signals"	'593 patent, cl. 15	Plain and ordinary meaning, i.e., "each stage circuit generates a scan signal and provides it to a corresponding scan line"
"a data driver for supplying data signals to the pixels through the data lines"	'593 patent, cl. 15	Plain and ordinary meaning

CLAIM TERM	RELEVANT CLAIMS	PARTIES' AGREED CONSTRUCTION
"a scan driver for supplying scan signals to the pixels through the scan lines"	'593 patent, cl. 15	Plain and ordinary meaning
"coinciding with"	'803 patent, cl. 1	"occupying the same place in space"
"a third pixel separate from the first pixel" / "another third pixel separated from the first pixel" / "another third pixel separated from the first pixel" / "separated from each other by the first pixel" / "the second pixels and the third pixels enclose the first pixel in the virtual square"	'803 patent, cls. 1-5	The first pixel" refers to the claim 1's "a first pixel" and does not refer to the claim 1's "another first pixel"/"the other first pixel."
"line" / "lines"	'803 patent, cl. 1; '683 patent, cls. 1, 8, 9, 13, 14; '578 patent, cls. 1, 2, 3, 4, 42	"straight line" / "straight lines"
"center"/ "centers"	'803 patent, cls. 1-3; '683 patent, cls. 1, 8, 9, 13, 14; '578 patent, cls. 1, 42	center point(s), wherein there is only one center point per pixel
"entirely offset"	'578 patent, cl. 1	Plain and ordinary meaning
"arranged along"	'578 patent, cls. 1, 42	located on or near the length of a line extending in
"larger area"	'578 patent, cls. 10, 42	Plain and ordinary meaning
"smaller area"	'578 patent, cl. 17	Plain and ordinary meaning
"different in size"	'578 patent, cl. 21	Plain and ordinary meaning, wherein "size" refers to "area."

Joint Submission 1-2. I hereby adopt the parties' proposed constructions and shall construe the terms set forth above according to their agreed-to definitions.

B. Construction of the Disputed Claim Terms

1. "node"

The term "node" appears in claims 1 and 15 of the '593 patent. The parties disagree on the claim construction of this term and have proposed the following constructions:

SDC	RESPONDENTS	STAFF
a point or area of interconnection between two or more components	a point or area directly between two or more elements, with no intervening elements	a point[3] of interconnection between two or more components

JC at 5.

SDC argues that "[t]he term 'node' is common in electronics and had a well-understood meaning to a POSITA." CMIB at 29. SDC explains that "the parties appear to agree that a 'node' is the region in a circuit where two or more components are connected." *Id.* It further explains that the experts agree that "a node need not be a single point in the geometric sense" and instead can "constitute the area where the components are connected." *Id.* According to SDC, the inclusion of an additional requirement that a node must have "no intervening elements" "is unwarranted and inappropriate." *Id.* at 30. SDC explains: "Such a requirement is not part of the IEEE definition, nor of any other dictionary definition that has been identified." *Id.* SDC also notes that "[t]here is nothing in the claims, the specification, or the prosecution history that states a node must have 'no intervening elements.'" *Id.*

Respondents assert that "[t]he key dispute is whether a node is a point or area ***between*** circuit elements, or whether a node can ***encompass circuit elements themselves***." RMIB at 8 (emphasis in original). Respondents argue that one of skill would understand that a node "is a point or area that does not encompass circuit elements." *Id.* Respondents also note that "circuit elements have multiple nodes, with a different node on each side of the element." *Id.*

Staff does not believe there is a claim construction dispute regarding this term. SMIB at 41. Rather, Staff contends that "there appears to be a concern that the widely accepted definition

[3] While Staff omits "or area" from its definition, Staff "understands its construction to encompass 'point or area' of interconnection." SMIB at 42 n. 12.

of "node" will be misapplied." *Id.* Staff notes that "'node' has a well-known meaning in the field of electronics" and that Staff's construction reflects that meaning. *Id.* at 42.

Claim terms are normally given "the meaning that the term would have to a person of ordinary skill in the art in question at the time of the invention." *Continental Circuits LLC v. Intel Corp.*, 915 F.3d 788, 796 (Fed. Cir. 2019) (quoting *Phillips*, 415 F.3d at 1312-13).) The parties do not dispute that the patent uses the term "node" in accordance with its plain and ordinary meaning. *See* CMRB at 12; RMIB at 8; SMIB at 42. Further, the parties each favorably cite to the definition of "node" as set forth in the IEEE Dictionary: "Within a circuit, a point of interconnection between two or more components such as input and output terminals." CMIB at 29; RMIB at 13; SMIB at 42); *see also* Tr. at 20:6-9 (stating that the dispute is not whether the IEEE definition applies, but "what does the IEEE definition mean to a person of skill in the art in the context of these patents"). SDC and Staff's proposed construction is consistent with this definition.

Respondents' construction, in turn, seeks to narrow the generally understood plain and ordinary meaning of the term based on a belief that the construction may be overbroad when applied. As Staff notes, however, a "dispute regarding the application of an accepted definition of a widely used term [is] better addressed in the context in which it arises, e.g., infringement, not in the abstract." SMIB at 43; *see Biotec Biologische Naturvepackungen GmbH & Co. KG v. Biocorp, Inc.*, 249 F.3d 1341, 1349 (Fed. Cir. 2001) "([T]he meaning of 'melting' does not appear to have required 'construction,' or to depart from its ordinary meaning. The issue in dispute was the application of the melting step in the accused process, a factual question of infringement."); *see also Certain Electronic Candle Prods. & Components Thereof*, Inv. No. 337-TA-1195, Order No. 24, at 62 (Sept. 14, 2020) ("I find that no claim construction with respect to these terms is required at this time. Disputes regarding the application of these terms may be addressed in the context of

infringement or invalidity."). Accordingly, I decline to address Respondents' arguments at this phase of the investigation.

For the above reasons, in this Investigation, the term "node" will be construed as having its plain and ordinary meaning, which is "a point or area of interconnection between two or more components."

2. "an outputting unit have a first node and a second node, the outputting unit to supply a voltage of a first power supply to the output terminal according to a voltage applied to the first node and a signal of the third input terminal to the output terminal according to a voltage applied to the second node"

The term "an outputting unit having a first node and a second node, the outputting unit to supply a voltage of a first power supply to the output terminal according to a voltage applied to the first node and a signal of the third input terminal to the output terminal according to a voltage applied to the second node" appears in claims 1 and 15 of the '593 patent. The parties disagree on the claim construction of this term and have proposed the following constructions:

SDC	RESPONDENTS	STAFF
Plain and ordinary meaning	This is a § 112(6) limitation **Function**: supplying a voltage of a first power supply to the output terminal according to a voltage applied to the first node and a signal of the third input terminal to the output terminal according to a voltage applied to the second node **Structure**: '593 patent at Figs. 3, 6, and 7 (Outputting Unit 230, including its input and output connections); 5:37-62, 8:28-31, and 8:43-46 Regardless of whether this limitation is determined to be a § 112(6) limitation or not, the claimed function must: supply a voltage of a first power supply to the output terminal solely based on a voltage applied to the first node; and supply a signal of the third input terminal to the output terminal solely based on a voltage applied to the second node.	Plain and ordinary meaning

JC at 2-3.

There are two disputes between the parties related to this term. First, the parties dispute whether the term invokes §112(6). Second, the parties dispute whether the outputting unit must supply a first power supply to the output terminal **solely based on** a voltage applied to the first node or supply a signal of the third input terminal **solely based on** a voltage applied to the second node.

i. Means Plus Function

SDC asserts that "[c]laims 1 and 15 of the '593 Patent recite a type of circuit, stage circuits, and particular structures that are included in the stage circuits" and "[t]he claims make clear that the 'outputting unit' is part of the stage circuit." CMIB at 9. SDC further notes that claim 15 "explains that the stage circuit is itself part of a scan driver," which are "a known class of circuits." *Id.* Thus, "[a]n 'outputting unit' is a known type of structure, and is defined in the claims not only as being part of the stage circuit but also as containing particular structural elements, 'a first node and a second node.'" *Id*. SDC also argues that "the claims recite specific structure *within* the outputting unit" and further "describe how the outputting unit interacts with the other components of the invention." *Id.* at 11. SDC notes that the "dependent claims specify particular structure for the output unit, including transistors and capacitors, further informing a POSITA of the outputting unit's structure." *Id.* at 12.

Respondents argue that "the 'outputting unit' limitation fails to recite sufficiently definite structure." RMIB at 15. Respondents assert that the term is written "in a format consistent with traditional means-plus-function claim limitations," and "replaces the word 'means' with the word 'unit,' alongside the non-structural prefix 'outputting.'" *Id.* According to Respondents, "unit" "is a well-known nonce word" and "[t]he fact that the '593 patent claims recite the prefix 'outputting' does not impart any structure onto the nonce term 'unit.'" *Id.* at 15, 16. Respondents further assert that there is "no generally understood meaning of what an 'outputting unit' is in the art." *Id.* at 16.

Staff argues that this term should be given its plain and ordinary meaning. SMIB at 39. Staff explains that the term "is not drafted 'in a format consistent with transitional means-plus-function claim limitations'" and that "the limitation describes the outputting unit's structure, not its function." *Id.* (quoting *Williamson v. Citrix Online, LLC*, 792 F.3d 1339, 1350 (Fed. Cir. 2015).

Staff further asserts that "claims 1 and 15 and their dependents describe the structure of the outputting unit in sufficient detail to place the 'outputting unit' outside the confines of § 112(6)." *Id.*

A means-plus-function term is one that invokes 35 U.S.C. § 112, ¶ 6, which states:

> An element in a claim for a combination may be expressed as a means or step for performing a specified function without the recital of structure, material, or acts in support thereof, and such claim shall be construed to cover the corresponding structure, material, or acts described in the specification or equivalents thereof.

35 U.S.S. § 112, ¶ 6. "To determine whether § 112, para. 6 applies to a claim limitation, our precedent has long recognized the importance of the presence or absence of the word 'means.'" *Williamson v. Citrix Online, LLC*, 792 F.3d 1339, 1348 (Fed. Cir. 2015). When a claim term does not include the word "means," courts presume that § 112, ¶ 6 does not apply. *Id.* at 1349. This "presumption can be overcome and § 112 para. 6 will apply if the challenger demonstrates that the claim term fails to 'recite sufficiently definite structure' or else recites 'function without reciting sufficient structure for performing that function." *Id*. The burden to present evidence rests on the party challenging the presumption. *Dyfan, LLC v. Target Corp.*, 28 F.4th 1360, 1367 (Fed. Cir. 2002).

The term "an outputting unit . . ." does not include the word "means." Thus, I must begin with the presumption that § 112, ¶ 6 does not apply. I find that Respondents have not rebutted this presumption.[4] The claim language shows that an "outputting unit" is part of a scan driver, which is a known class of structures.[5] '593 patent at cl. 15 (reciting a "scan driver including stage circuits coupled to the scan lines" and "each of the stage circuits includes: an outputting unit . . ..."). Claims

[4] I note that Respondents' expert did not provide an opinion with respect to this term.
[5] Complainants' expert, Dr. Hatalis explains that "[a] person of ordinary skill in the art would have been familiar with scan drivers, which are structures that control scan lines for selecting rows of pixels in a display." CMIB Ex. A at ¶ 70.

1 and 15 further provide that an "outputting unit" contains structural elements such as a first node and a second node. '593 patent at cls. 1, 15. The claims also describe how the "outputting unit" interacts with other recited structures of the stage circuit. Specifically, claims 1 and 15 state that the outputting unit supplies "a voltage of a first power supply to the [stage circuit's] output terminal according to a voltage applied to the first node" and supplies "a signal of the third input terminal to the output terminal according to a voltage applied to the second node." *Id.* at cls. 1, 15.

The dependent claims provide further support for a finding that "an outputting unit" connotes structure. [6] The dependent claims specify particular structures for the outputting unit, including transistors and capacitors. For example, claim 7 recites that the outputting unit includes:

> a fourth transistor between the first power supply and the output terminal, the fourth transistor having a gate electrode coupled to the first node;
>
> a fifth transistor between the output terminal and the third input terminal, the fifth transistor having a gate electrode coupled to the second node;
>
> a first capacitor between the second node and the output terminal; and
>
> a second capacitor between the first node and the first power supply.

'593 patent at cl. 7. Claim 21 is similar but is dependent on claim 15, instead of claim 1. *Id.* at cl. 21.

---

[6] Respondents disagree that the dependent claims weigh against a finding that "an outputting unit" is not a means-plus-function term. Respondents assert that "[u]nder 'Federal Circuit precedence, if the dependent claims merely characterize examples from the specification (as here) it does not alter the fact that the term may be construed as a means-plus-function claim." RMRB at 5 (quoting *Malibu Boats, LLC v. Skier's Choice, Inc.*, No. 3:18-CV-15-JPM, 2020 WL 5026852, at * 7 (E.D. Tenn. Aug. 25, 2020)). The case cited in Respondents' brief is a district court case which, in turn cites an unpublished 2001 Federal Circuit case. *See Malibu Boats*, 2020 WL 5026852 at *7 (citing *Mollhagen v. Witte*, 18 Fed. App'x 846, 849 (Fed. Cir. 2001)). More recently, in *TEK Global, S.R.L. v. Sealant Sys. Int'l, Inc.*, the Federal Circuit considered dependent claims in evaluating whether a term invoked §112(6). The court stated: "[T]he dependent claims suggest that § 112, ¶ 6 does not govern. Indeed, they add limitations that either describe particular structural features or flesh out whether the term has a particular structural meaning." 920 F.3d 777, 786 (Fed. Cir. 2019) (internal quotations and citations omitted).

As such, I find that Respondents have not overcome the presumption that "outputting unit…" is not subject to § 112(6).

ii. "Solely Based On"

Respondents argue that "[r]egardless of whether this limitation is determined to be a § 112 (6) limitation or not, the claimed function . . . must be interpreted to require supplying a voltage of a first power supply to the output terminal solely based on a voltage applied to the first node, and supply a signal of the third input terminal to the output terminal solely based on a voltage applied to the second node." RMIB at 19. Respondents argue that "[i]t is readily apparent . . . that the phrases 'according to a voltage applied to the first node' and 'second node' in this claim term mean 'solely based on.'" *Id*.

SDC argues that "the claim language requires only that the outputting unit supply a voltage to the output terminal 'according to' the voltage applied to the first and second nodes." CMIB at 14. SDC notes: "Nothing in the claims or the specification requires that the voltage be supplied 'solely' based on the voltage applied to the first node or 'solely' based on the voltage applied to the second node." *Id.* at 14-15. SDC further asserts that Respondents' proposal "would read out the preferred embodiment." *Id.* at 14.

Staff argues that "[t]he plain and ordinary meaning of 'according to' is 'in conformity with.'" SMIB at 41. Staff explains that "[t]he intrinsic record does not provide any basis for departing from the term's plain and ordinary meaning." *Id.*

"[T]he words of a claim are generally given their ordinary and customary meaning.". *Phillips*, 415 F.3d at 1312-1313. There are two exceptions to this rule: "1) when a patentee sets out a definition and acts as his own lexicographer, or 2) when the patentee disavows the full scope of a claim term either in the specification or during prosecution." *Thorner v. Sony Comput. Ent.*

Am. LLC, 669 F.3d 1362, 1365 (Fed. Cir. 2012). Respondents have not provided evidence that either of these exceptions applies here.

In support of their position, Respondents point to figure 3 and note that it "is the only example of an outputting unit in each of the three specification embodiments." RMIB at 19. Figure 3 appears as follows:

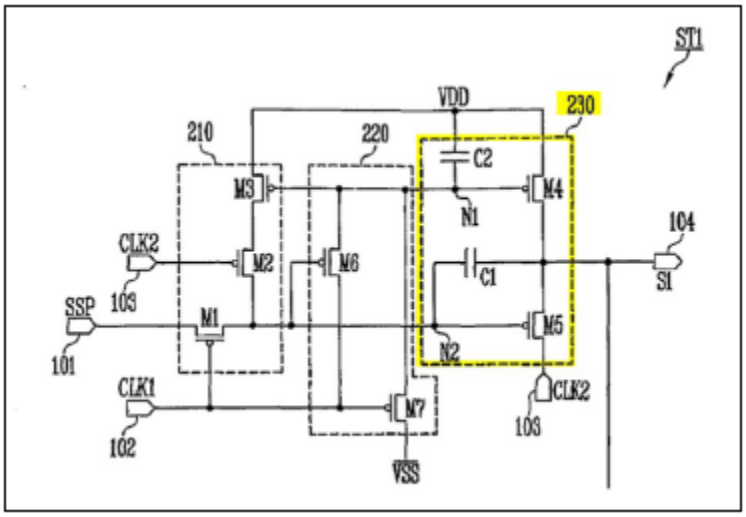

'593 patent at Fig. 3 (cropped version of Figure 3; highlighting added by SDC). The specification explains that "[t]he fourth transistor M4 controls coupling between the first power supply VDD and the output terminal 104 in accordance with the voltage applied to the first node N1." *Id.* at 5:45-47. Similarly, "[t]he fifth transistor M5 controls coupling between the output terminal 104 and the third input terminal 103 in accordance with the voltage applied to the second node N2." *Id.* at 5:53-55. This language does not indicate a clear intent that "according to" should be read as "solely based on." Additionally, the Federal Circuit has "expressly rejected the contention that if a patent describes only a single embodiment, the claims of the patent must be construed as being limited to that embodiment." *Phillips*, 415 F.3d at 1323.

For the above reasons, in this Investigation, the term "an outputting unit having a first node and a second node, the outputting unit to supply a voltage of a first power supply to the output

terminal according to a voltage applied to the first node and a signal of the third input terminal to the output terminal according to a voltage applied to the second node" will be given its plain and ordinary meaning.

3. "a first driver to control the voltage of the second node in accordance with signals of the first input terminal, the second input terminal, and the third input terminal"

The term "a first driver to control the voltage of the second node in accordance with signals of the first input terminal, the second input terminal, and the third input terminal" appears in claims 1 and 15 of the '593 patent. The parties disagree on the claim construction of this term and have proposed the following constructions:

SDC	RESPONDENTS	STAFF
Plain and ordinary meaning, wherein a "driver" is "an electronic circuit used to power or control something"	This is a § 112(6) limitation **Function**: controlling the voltage of the second node in accordance with signals of the first input terminal, the second input terminal, and the third input terminal. **Structure 1**: '593 patent at Fig. 3 (First Driver 210, including its input and output connections); 5:63-6:21 **Structure 2**: '593 patent at Fig. 6 (First Driver 210, including its input and output connections); 5:63-6:21, 8:28-31 **Structure 3**: '593 patent at Fig. 7 (First Driver 210, including its input and output connections); 5:63-6:21, 8:43-46. Regardless of whether this limitation is determined to be a § 112(6) limitation or not, the claimed function requires that: the voltage of the second node is the voltage of the output of the first driver based on the signals of the first input terminal, the second input terminal, and the third input terminal, which are input to the first driver.	Plain and ordinary meaning, wherein a "driver" is "an electronic circuit used to power of control something"

JC at 3-4.

There are two disputes between the parties related to this term. First, the parties dispute whether the term invokes §112(6). Second, the parties dispute whether the claimed function requires that "the voltage of the second node is the voltage of the output of the first driver based on the signals of the first input terminal, the second input terminal, and the third input terminal, which are input to the first driver."

i. Means Plus Function

SDC asserts that "[t]he claims make clear that the 'first driver' is part of the stage circuit." CMIB at 17. SDC notes that claim 15 "explains that the stage circuit is itself part of a scan driver," which are "a known class of circuits." *Id.* Additionally, the claims "describe how the 'first driver' interacts with the other recited structures of the stage circuit, and dependent claims specify particular structural elements (e.g., transistors) included within the 'first driver.'" *Id.*

Respondents argue that "[t]he 'first driver' limitation invokes 35 U.S.C. § 112(6) because it is expressed as a means for performing a specified function without reciting structure for performing that function." RMIB at 20. Respondents assert that the term "is written in the traditional means-plus-function claim format, replacing the term 'means' with the nonce word 'driver,' and reciting the function performed by the first driver as 'to control the voltage of' the second node in accordance with certain signals." *Id.* Respondents further assert that "it would be contrary to the intrinsic evidence of the '593 patent to conclude that 'first driver' conveys sufficient structure," as the patent "criticizes prior art stage circuits that include what it considers to be too many transistors." *Id.* at 22.

Staff argues that this term should be given its plain and ordinary meaning. SMIB at 25. Staff explains that the term does not use the word "means" and is thus "presumed not to be a means-plus-function term." *Id.* (citing *Williamson*, 792 F.3d at 1350). Staff notes that "'[d]river'

is not a term that has been recognized as a nonce term" and instead "connotes a particular class of structures, which is reflected by dictionary definitions" cited by Dr. Foty. *Id.* at 26. Staff further explains that "even if 'driver' were found not to connote a class of structures to persons skilled in the art, claims 1 and 15 and their dependents recite sufficient structure to keep 'first driver' out of the ambit of § 112(6)." *Id.* at 27.

The term "a first driver . . ." does not include the word "means." Thus, I must begin with the presumption that § 112, ¶ 6 does not apply. I find that Respondents have not rebutted this presumption. The claim language shows that "a first driver" is part of a stage circuit, which in turn is part of a scan driver.[7] '593 patent at cl. 15 (reciting "[a]n organic light emitting display, comprising . . . [a] scan driver including stage circuits coupled to the scan lines . . wherein each of the stage circuits includes . . . a first driver to control the voltage of the second node in accordance with signals of the first input terminal, the second input terminal, and the third input terminal"). The claims further indicate that "a first driver" contains a transistor, the on/off operation of which is controlled by the signal of the stage circuit's third input terminal. *Id.*; *see also id.* at cl. 1 ("the signal of the third input terminal directly controls an on/off operation of a transistor, the transistor included in the first driver"). The claims also describe how "a first driver" interacts with other recited structures of the stage circuit. Specifically, claims 1 and 15 state that the first driver "control[s] the voltage of the second node in accordance with signals of the first input terminal, the second input terminal, and the third input terminal." *Id.* at cls. 1, 15; *see also* CMIB Ex. A at ¶ 93 (explaining that "[a] skilled artisan would understand from this claim language that the 'first driver' is part of a stage circuit included in the scan driver circuitry, and itself includes circuit

[7] As noted above, Dr. Hatalis explains that "[a] person of ordinary skill in the art would have been familiar with scan drivers, which are structures that control scan lines for selecting rows of pixels in a display." CMIB Ex. A at ¶ 70.

elements capable of receiving input signals and providing different output signals to control the voltage of the second node.”).

The dependent claims further specify particular structures for the first driver, including three transistors. For example, claim 6 recites that the first driver includes:

> a first transistor between the first input terminal and the second node, the first transistor having a gate electrode coupled to the second input terminal; and
>
> a second transistor and a third transistor serially positioned between the second node and the first power supply,
>
> wherein a gate electrode of the second transistor is coupled to the third input terminal; and
>
> wherein a gate electrode of the third transistor is coupled to the first node.

’593 patent at cl. 6. Claim 20 is similar but is dependent on claim 15, instead of claim 1. *Id.* at cl. 20.

The extrinsic evidence provides further support that “driver” connotes a class of structures. For example, the IEEE Dictionary defines driver as “[a] program, circuit, or device used to power or control other programs, circuits, or devices.” CMIB Ex. A at ¶ 90; *see also id.* (“An electronic circuit, often available in the form of a logic gate, that is capable of providing large currents or voltages to other circuits connected to the driver’s output”). As Dr. Hatalis notes: “A person or ordinary skill in the art would have recognized that a ‘driver’ is a widely used type of circuit for this purpose.” CMIB Ex. A at ¶ 92. Respondents have not introduced any evidence to contradict this definition. Thus, the evidence that “driver” has a well-known definition as a class of structures remains unrebutted.

Respondents instead assert that the definition of “driver” is purely functional and, as such, supports a finding that the term is a means-plus-function term. RMIB at 23. The Federal Circuit has explained, however, that “it is sufficient if the claim term is used in common parlance or by

persons of skill in the pertinent art to designate structure, even if the term covers a broad class of structure and even if the term identifies the structures by their function." *Skky, Inc. v. Mindgeek, S.A.R.I.*, 859 F.3d 1014, 1019 (Fed. Cir. 2017 (emphasis added); *see also Dyfan*, 28 F.4th at 1366; *Skky, Inc.*, 859 F.3d at 1019 (stating that "[c]laim terms 'need not connote a single, specific structure,' [to avoid 112, ¶ 6 treatment] and may instead 'describe a class of structures").

As such, I find that Respondents have not overcome the presumption that "a first driver …" is not subject to § 112(6).

ii. Construction

Respondents argue that "[r]egardless of whether this limitation is determined to be a § 112 (6) limitation or not, the claimed function must be interpreted to require that the voltage of the second node is the output of the first driver, based on the signals of the inputs to the driver." RMIB at 26. Respondents explain that "'controlling the voltage" of a node 'in accordance' with input signals requires two things: 1) that the input signals cause the driver to produce an output of the driver 'in accordance' with those signals; and 2) that the driver's output 'controls' its node by dictating its voltage.'" *Id.* Respondents contend that "[a] POSITA would not understand the driver to 'control' the voltage of a node if something other than the driver's output is able to override that output and change the node's voltage in spite of the driver's output." *Id.*

SDC argues that Respondents' proposal "improperly attempts to read additional limitations into the claim that are not called for by the claim language." CMIB at 22. According to SDC, "[t]he claim recites only that the first driver 'controls' the voltage of the second node, not that the voltage of the first driver 'is' the voltage of the second node." *Id.* Thus, SDC concludes: "Controlling a voltage is conceptually different from *being* that voltage." *Id.*

Staff agrees that Respondents proposal "unduly limits the claim." SMIB at 29. Staff explains that "[t]he preambles of claims 1 and 15 use the transitional term 'comprising.'" *Id.* "As open-ended claims, claim 1 and 15 do not require that the 'first driver' 'control' the second node's voltage by itself." *Id.* Staff further explains that "the specification describes the 'second driver' as 'control[ling]' the voltage on the second node, even though it does so in conjunction with the outputting unit." *Id.* Staff also asserts that the plain and ordinary meaning of the phrase "in accordance with" "does not suggest, much less require, that the signals on the input terminals pass through the elements of the first driver." *Id.* at 31. Staff notes that Respondents' "interpretation of 'in accordance with' is inconsistent with the specification's description of the preferred embodiment." *Id.*

I first find that "[c]ontrol[ling] the voltage of the second node" does not require that the voltage of the second node be determined by the first driver alone. Neither the claim language nor the specification clearly supports limiting the claim in this manner. Additionally, in other contexts, the patent uses the words "direct control" when it intends the control to be direct. *See* '593 patent at cl. 1 ("the signal of the third input terminal directly controls…"). As to the use of the word "direct" generally, the patent explains:

> It will also be understood that when an element is referred to as being 'between,' 'connected to,' or 'coupled to' another element, it can be directly between, connected or coupled to the other element or intervening elements may be present. In contrast, when an element is referred to as being 'directly between,' 'directly connected to,' or 'directly coupled to' another element, there are no intervening elements present.

'593 patent at 4:19-26. While this portion of the specification does not pertain to "control," it provides further evidence that one cannot simply assume that "control" means "directly control."

Other portions of the specification likewise support SDC and Staff's understanding. In the context of the second driver (for which Respondents make a similar argument), the specification

provides that the second driver "controls the voltage on the first node" and further provides that the "second capacitor C2 [of the outputting unit] charges the voltage applied to the first node N1." '593 patent at cls.1, 15; 5:60-62. Dr. Hatalis explains that "[c]apacitor C2 helps to 'maintains a turn on state' for the fourth transistor M4 and the third transistor M3 . . . based on the charge stored thereon." CMIB Ex. A at ¶ 99. Thus, the second driver controls the voltage of the second node in conjunction with the outputting unit. *Id.*

I further find that "in accordance with" does not require that the input signals pass through elements of the first driver. There is no clear support for such a limitation in the intrinsic evidence. Additionally, the preferred embodiment contradicts this position. Figure 3 appear as follows:

FIG. 3

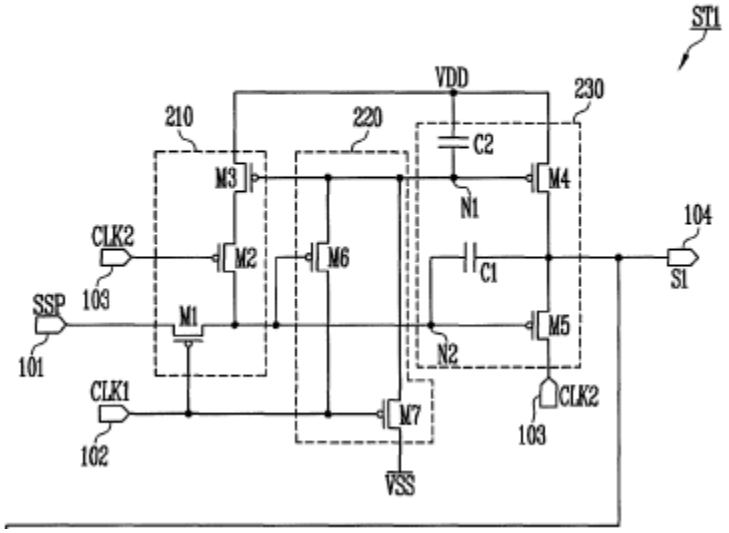

'593 patent at Fig. 3 (cropped to show only the top portion of the figure). In describing Figure 3, the specification states: "The first driver 210 controls the voltage of the second node N2 in accordance with signals supplied to the first input terminal 101 to the third input terminal 103. For this purpose, the first driver includes a first transistor M1, a second transistor M2, and a third transistor M3." *Id.* at 5:63-67. The specification further explains that transistors M1, M2, and M3

receive signals supplied on the three input terminals 101, 102, and 103. *Id.* at 6:1-21. The specification then provides that the first clock signal CLK1 on the second input terminal turns on the first transistor M1 which results in "the first input terminal 101 and the second node N2 [being] electrically coupled to each other," so that "the second node N2 is set to be at a low voltage by the start signal SSP supplied to the first input terminal 101." *Id.* at 6:55-59. Likewise, the second clock signal CLK2 on the third input terminal turns on the second transistor M2, which, if transistor M3 is also turned on, electrically couples second node N2 to first power supply VDD such that voltage VDD is supplied to the second node N2. *Id.* at 5:47-49, 6:7-21, 7:11-18, 8:4-7. Thus, neither the first clock signal CLK1 nor the second clock signal CLK2 are output from the first driver to the second node N2. Instead, as Dr. Hatalis notes: CLK1 and CLK2 "are applied to the gate electrodes of transistors in the first driver." CMIB Ex. A at ¶ 98. Thus, in the preferred embodiment, the clock signals supplied on the second and third input terminals do not pass through the first driver.

For the above reasons, in this Investigation, the term "a first driver to control the voltage of the second node in accordance with signals of the first input terminal, the second input terminal, and the third input terminal" will be given its plain and ordinary meaning, wherein "driver" is 'an electronic circuit used to power or control something."

4. "a second driver to control the voltage of the first node in accordance with the signal of the second input terminal and the voltage of the second node"

The term "a second driver to control the voltage of the first node in accordance with the signal of the second input terminal and the voltage of the second node" appears in claims 1 and 15 of the '593 patent. The parties disagree on the claim construction of this term and have proposed the following constructions:

SDC	RESPONDENTS	STAFF
Plain and ordinary meaning, wherein a "driver" is "an electronic circuit used to power or control something"	This is a § 112(6) limitation **Function**: controlling the voltage of the first node in accordance with the signal of the second input terminal and the voltage of the second node **Structure 1**: '593 patent at Figs. 3 (Second Driver 220, including its input and output connections); 6:22-40 **Structure 2**: '593 patent at Fig. 6 (Second Driver 220a, including its input and output connections), 8:32-42. Regardless of whether this limitation is determined to be a § 112(6) limitation or not, the claimed function requires that: the voltage of the first node is the voltage of the output of the second driver based on the signal of the second input terminal and the voltage of the second node, which are input to the second driver.	Plain and ordinary meaning, wherein a "driver" is "an electronic circuit used to power or control something"

JC at 4-5.

SDC asserts that "[c]laims 1 and 15 of the '593 Patent relate to stage circuits" and that "[t]he claims make clear that the 'second driver' is part of the stage circuit." CMIB at 24. SDC states that "[t]he claims also describe how the 'second driver' interacts with the other structures of the claimed stage circuit, and dependent claims further specify particular structural elements (e.g., transistors) included within the 'second driver.'" *Id.* at 24-25. SDC explains that the "extrinsic evidence also shows that a 'driver' had a well understood meaning to a POSITA, referring to a

class of structures." *Id.* at 27. Finally, SDC argues that Respondents' proposal "attempts to read additional limitations into the claim that have no support in either the claims or the specification" and that "would exclude a preferred embodiment." *Id.* at 28.

Respondents assert that the "second driver" limitation is a means-plus-function term "[f]or the same reasons discussed . . . for the 'first driver' limitation." RMIB at 29. Respondents again argue that "'driver' is a nonce word . . and the remaining language of the limitation merely recites [that] the function performed by the second driver [is] 'to control the voltage of the first node in accordance with certain signals." *Id.* As with "first driver," Respondents assert that "[r]egardless of whether the 'second driver' limitation is determined to be a § 112(6) limitation or not, its claimed function must be interpreted to require that the voltage of the first node is the output of the second driver, based on the signals of the inputs to the driver." *Id.* Respondents note that the support for their argument is the same as that discussed with respect to the "first driver" limitation. *Id.* at 32.

Staff argues that this term should be given its plain and ordinary meaning. SMIB at 34. Staff explains that the term does not use the word "means" and is thus "presumed not to be a meals-plus-function term." *Id.* at 35 (citing *Williamson*, 792 F.3d at 1350). Staff asserts "driver" connotes sufficient structure, particularly when viewed "in combination with the claims' descriptions of the 'second driver.'" *Id*. Staff further explains that even if "driver" were found not to connote a class of structures to person skill in the art, claims 1 and 15 and their dependent recite sufficient structure "to keep 'second driver' out of the ambit of § 112(6)." *Id.* at 35. Staff disagrees with Respondents' interpretation of the claim term and argues that it should be rejected for the same reasons as with "a first driver." *Id.* at 36-37.

The term "a second driver . . ." does not include the word "means." Thus, I must begin with the presumption that § 112, ¶ 6 does not apply. I find that Respondents have not rebutted this presumption. The claim language shows that "a second driver" is part of a stage circuit, which in turn is part of a scan driver. '593 patent at cl. 15 (reciting "[a]n organic light emitting display, comprising . . . [a] scan driver including stage circuits coupled to the scan lines . . wherein each of the stage circuits includes . . . a second driver to control the voltage of the first node in accordance with the signal of the second input terminal and the voltage of the second node"). The claims also describe how "a second driver" interacts with other recited structures of the stage circuit. Specifically, claims 1 and 15 state that the second driver "control[s] the voltage of the first node in accordance with signals of the second input terminal and the voltage of the second node." *Id.* at cls. 1, 15; *see also* CMIB Ex. A at ¶ 103 (explaining that "[a] skilled artisan would understand from this claim language that the 'second driver' is part of a stage circuit included in the scan driver circuitry, and itself includes circuit elements capable of receiving input signals and providing different output signals to control the voltage of the first node.").

The dependent claims further specify particular structures for the second driver, including several transistors. For example, claim 8 recites that the second driver includes:

> a sixth transistor between the first node and the second input terminal, the sixth transistor having a gate electrode coupled to the second node; and
>
> a seventh transistor between the first node and a second power supply, the second power supply having a lower voltage than the first power supply, the seventh transistor having a gate electrode coupled to the second input terminal.

'593 patent at cl. 8; *see also id.* at cl. 9. Claims 22 and 23 are similar but dependent on claim 15, instead of claim 1. *Id.* at cl. 22-23.

As noted above with respect to "a first driver," the extrinsic evidence also supports a finding that "driver" connotes a class of structures. Respondents have not introduced any evidence

to contradict this definition. Thus, the evidence that "driver" has a well-known definition as a class of structures remains unrebutted.

I also reject Respondent's proposed requirement that the claim function requires that "the voltage of the first node is the voltage of the output of the second driver based on the signal of the second input terminal and the voltage of the second node, which are input to the second driver." The rationale for this finding is the same as that discussed above with respect to "a first driver."

For the above reasons, in this Investigation, the term "a second driver to control the voltage of the first node in accordance with the signal of the second input terminal and the voltage of the second node" will be given its plain and ordinary meaning, wherein "driver" is 'an electronic circuit used to power or control something."

5. "fifth transistor" and "sixth transistor"

The term "fifth transistor" and "sixth transistor" appears in claim 1 of the '599 patent. The parties disagree on the claim construction of this term and have proposed the following constructions:

SDC	RESPONDENTS	STAFF
Plain and ordinary meaning, i.e., "fifth transistor" means a transistor that is not a first, second, third, or sixth transistor as defined in claim 1 "sixth transistor" means a transistor that is not a first, second, third, or fifth transistor as defined in claim 1	Respondents take no position on this term.	Indefinite for lack of an antecedent basis, *viz.*, a "fourth transistor"

JC at 5-6.

Staff notes that "[i]ndependent claim 1 recites a 'first transistor,' 'second transistor,' 'third transistor,' 'fifth transistor,' and 'sixth transistor' but does not recite a 'fourth transistor.'" SMIB at 12. Staff argues that, because of the presence of the unrecited transistor, "the claim fails to provide reasonable certainty as to what functions (if any) the unrecited transistor would perform in the circuit or how the unrecited transistor would be connected to the recited transistors." *Id.*

SDC argues that claim 1 is not indefinite because "there is no requirement that numbering of elements in a patent claim be consecutive." CMIB at 32. SDC explains that "[t]he Federal Circuit has recognized that numbering of elements in patent claims is a claim-drafting tool to label elements so as to distinguish them from one another." *Id.* According to SDC, "[t]he ordinal labels applied to the transistors of claim 1 simply convey to a POSITA that each of the recited transistors is distinct from the others." *Id.* at 33. SDC also asserts that "[t]he surrounding claim language, specification, and prosecution history bolster the conclusion that claim 1 is not indefinite." *Id.* at 34.

Staff does not disagree with SDC that ordinals are used "to distinguish between repeated instances of an element or limitation," but asserts that the use of ordinals must have some significance, such that "'second" presupposes the existence of a "first," "third" presupposes the existence of a "first" and a "second," etc." SMIB at 12-13. Staff contends that ordinal terms used here should be given their plain and ordinary meaning, as there is no clear evidence of lexicography *Id.* at 14.

To find a claim term indefinite, there must be clear and convincing evidence the claim "read in light of the specification delineating the patent, and the prosecution history, fail to inform, with reasonable certainty, those skilled in the art about the scope of the invention." *Nautilus*, 134

S. Ct. at 2124. I find that there is not sufficient evidence to conclude that the terms "fifth transistor" and "sixth transistor" are indefinite.

The Federal Circuit has explained that "the use of the terms "first" and "second" is a common patent-law convention to distinguish between repeated instances of an element or limitation." *3M Innovative Properties Co. v. Avery Dennison Corp.,* 350 F.3d 1365, 1371 (Fed. Cir. 2003); *see also Gillette Co. v. Energizer Holdings, Inc.*, 405 F.3d 1367, 1373 (Fed. Cir. 2005) (finding that the claim was "clearly not using the ordinals – first, second, third – to show a consecutive numerical limit but only to distinguish or identify the various members of the group").[8] This does not, however, mean that the use of ordinals to label components is devoid of any meaning whatsoever.

The Federal Circuit has not squarely addressed the precise issue presented here. In *3M Innovative Properties*, the court noted that "the use of the terms 'first . . . pattern' and 'second . . . pattern' is equivalent to a reference to 'pattern A' and 'pattern B,' and should not in and of itself impose a serial or temporal limitation onto claim 1." 350 F.3d at 1371. The court did not address how to read a claim that recites, for example, patterns 1, 2, 3, and 5 (or A, B, C, and E), yet omits any reference to pattern 4 (or D). Thus, this case does not offer precise guidance as to how to resolve the issue here.

Similarly, in *Gillette Co. v. Energizer Holdings, Inc.*, the court considered whether the term "group of first, second, and third blades" was met by a razor with four blades. 405 F.3d at 1371-73. The court explained that the terms "first, second, and third" are "not a serial or numerical limitation [because] the claim does not follow a consecutive order. . . . The claim is thus clearly not using the ordinals – first, second, third – to show a consecutive numerical limit but only to

[8] *See also Free Motion Fitness, Inc. v. Cybex Intern., Inc.*, 423 F.3d 1343, 1348 (Fed. Cir. 2005) (finding ordinal terms do not denote spatial location).

distinguish or identify the various members of the group." *Id.* at 1373. As such, the court found that the claim was not restricted to razors with only three blades. *Id.* Once again, the court did not address the scenario in which a claim recited, for example, a first and third blade, but omitted the second.

Both parties cite to *Seiko Epson Corp. v. Coretronic Corp.*, No. 06-06946, 2008 WL 2095505 (N.D. Cal. May 16, 2008) as a comparable case. In *Seiko Epson*, the claim recited a "second exhaust fan," but did not recite a "first exhaust fan." In construing the term, the district court concluded that a "first exhaust fan" was implicit in the claim. *See id.* at * 4 ("The use of a 'second exhaust fan' inherently teaches the use of more than one fan in the projector"); *see also id.* at * 5 (finding that "the second exhaust fan here must refer to a fan in addition to another fan"). The Federal Circuit affirmed the district court's judgment with respect to this term. 376 Fed. App'x 23 (Fed. Cir. 2010) (per curiam). In *Seiko Epson*, however, the issue of indefiniteness was not before the court.

Finally, in *Comcast Cable Communications, LLC v. Sprint Communications Co.*, where a claim recited a "second communication system" but not a "first communication system," a district court specifically rejected an argument that the claim was indefinite for lacking explicit discussion of every consecutive ordinal. *See* 38 F. Supp. 3d 589, 616 (E.D. Pa. 2014). The court held that a claim reciting a "second communication system" but not a "first communication system" was not indefinite. *Id.*

Although, there is no caselaw directly controlling the issue presented here, the *Seiko* and *Comcast* cases are instructive.[9] I therefore must review the intrinsic record and apply what

[9] In a different - but instructive - issue, recent Federal Circuit precedent provides that no additional language is necessary to find that a plural use of a claim term refers to multiple of the described items. *See Apple Inc. v. MPH Techs. Oy*, 28 F.4th 254, 261-62 (Fed. Cir. 2022) ("On claim

guidance has been provided to determine if there is clear and convincing evidence that the claim "read in light of the specification delineating the patent, and the prosecution history, fail[s] to inform, with reasonable certainty, those skilled in the art about the scope of the invention." *Nautilus*, 134 S. Ct. at 2124. For the reasons set forth below, I find that there is not sufficient evidence to establish indefiniteness.

Turning first to the claims, claim 1 recites five transistors, while claim 2 recites an additional transistor. Under the doctrine of claim differentiation, "the presence of a dependent claim that adds a particular limitation gives rise to a presumption that the limitation in question is not present in the independent claim." *Phillips*, 415 F.3d at 1315. This presumption is "especially strong when the limitation in dispute is the only meaningful difference between an independent and dependent claim, and one party is urging that the limitation in the dependent claim should be read into the independent claim." *SunRace Roots Enter. Co., Ltd. v. SRAM Corp.*, 336 F.3d 1298, 1303 (Fed. Cir. 2003). The Staff suggests that the presumption applies in this case and that adding the fourth transistor of claim 2 to claim 1 "would render claim 2 superfluous, a disfavored result." SMIB at 16. Nevertheless, although claim 2 requires an additional transistor, it requires a particular transistor that is "a fourth initialization transistor for discharging the data signal voltage stored in the capacitor in response to a scan signal just before the current scan signal." Thus, one of skill would understand that claim 1 does not require the particular transistor recited claim 2, but would require generically that a fourth transistor is present. I therefore find that an additional generic transistor with those limitations is implicit in claim 1.

---

construction, Apple claims there is a presumption that a plural term covers one or more items. It suggests that patentees can overcome that presumption by using a word, like plurality, that clearly requires more than one item. Apple misstates the law. In accordance with common English usage, we presume a plural term refers to two or more items."). Here, the listing of five ordinal numbers, with one in the sequence missing, suggests that a total of six things were contemplated by the claim.

The prosecution history provides one of skill with additional context to understand the meaning of claim 1. Claims 1 and 2 issued from applications claims 1-3. SMIB Ex. D at SDC-1351-00000078-79. Application claim 1 recited the elements of issued claim 1 but omitted a "fifth transistor" and "sixth transistor." The fifth and sixth transistors were instead part of application claim 3, while application claim 2 added a fourth transistor. *Id.* The examiner rejected application claims 1 and 2 but stated that application claim 3 would be allowable if written in independent form. SMIB Ex. E at 3-5. The applicant therefore cancelled application claim 3 and amended application claim 1 to incorporate the "fifth transistor" and "sixth transistor." SMIB Ex. F at 2-3, 14. The Examiner thereafter allowed application claims 1 and 2. Given this history, although it is clear that claim 1 refers explicitly to five transistors while claim 2 refers explicitly to a sixth transistor (albeit referred to as the "fourth" transistor), it is less clear whether the odd listing of ordinal numbers created by the amendment was purposeful or an oversight. Thus, there is no prosecution history estoppel here. It is improper to limit the plain language based on unclear statements in the specification and prosecution history. *Thorner v. Sony Computer Ent. Am. L.L.C.*, 669 F.3d 1362, 1367 (Fed. Cir. 2012) (emphasizing that "[t]he patentee is free to choose a broad term and expect to obtain the full scope of its plain and ordinary meaning, unless the patentee explicitly redefines the term or disavows its full scope").

Nevertheless, as a result of the amendment, the five transistors of claim 1 are out of order (first, second, third, fifth, and sixth). The Federal Circuit has previously affirmed a construction that infers the missing element in a list is present in a claim. *See Seiko Epson*, 376 Fed. App'x 23

(Fed. Cir. 2010) (per curiam). One of skill, with the knowledge of this history, would understand what is meant by claims 1 and 2.[10]

For the above reasons, in this Investigation, the term "fifth transistor" and "sixth transistor" will be given their plain and ordinary meaning, i.e., "fifth transistor" means a transistor that is not a first, second, third, or sixth transistor as defined in claim 1 and "sixth transistor" means a transistor that is not a first, second, third, or fifth transistor as defined in claim 1. I also find that an additional generic transistor is implicit in claim 1.

6. "grounded"

The term "grounded" appears in claims 15 and 17 of the '599 patent. The parties disagree on the claim construction of this term and have proposed the following constructions:

SDC	RESPONDENTS	STAFF
Plain and ordinary meaning, i.e., "coupled to a reference voltage"	connected to a 0V source	connected to the voltage reference point in a circuit

JC at 6.

SDC argues that "[t]he term 'grounded' and its root 'ground' have a well-accepted meaning to a POSITA." CMIB at 35. Specifically, "[g]round is a reference voltage in a circuit." *Id.* Thus, "[t]o say that a terminal is 'grounded' means that the terminal is coupled to a reference voltage." *Id.* at 36. According to SDC, "[t]he '599 Patent uses the terms 'ground' and 'grounded' consistent with this plain and ordinary meaning." *Id.*

[10] I recognize that the Federal Circuit has admonished against judicial rewriting of claims to preserve validity or suit a particular party's litigation needs. *See Becton Dickinson & Co. v. C.R. Bard, Inc.*, 922 F.2d 792, 799 & n. 6, (Fed. Cir. 1990); *Nike Inc. v. Wolverine World Wide, Inc.*, 43 F.3d 644, 647 (Fed. Cir. 1994) (rejecting the patentee's proposed claim construction that would, "in effect, rewrite its patent claims to suit its needs in this litigation"). That is not what I do here. Here, I determine what one of skill, with the knowledge of the history and context of the claim, would understand what is meant by claims 1 and 2 – i.e. whether those claims "particularly point [ ] out and distinctly claim [ ]" what the inventor regards as his invention." 35 U.S.C. § 112, ¶ 2.

Respondents argue that "[t]he term 'grounded' is a well-known term of art in circuit design, which refers to a connection to a defined voltage of 0V." RMIB at 33. According to Respondents, Complainant's and Staff's construction "miss[es] the mark" by defining "grounded" as an arbitrary reference voltage without "any indication as to what voltage level the 'reference' voltage is set to." *Id.* at 34. Respondents explain that "circuits can and often do have different 'reference' voltages, such as V_{DD}, V_{CC}, V_{SS}, etc., which each can and typically do have different voltage levels." *Id*. Respondents state: "A 'grounded' voltage, however, is a specific type of reference voltage, typically understood by a POSTIA to have a specific fixed voltage defined as the Earth voltage of 0V." *Id.*

Staff's construction is consistent with SDC's construction.[11] Staff notes that its construction is based on the plain and ordinary meaning of the term "grounded," which "encompasses connections with non-zero voltage sources, such as VSS, as well as zero sources." SMIB at 19. Staff notes that "[t]he understanding of 'ground' as referring to a voltage reference point is reflected in various technical dictionaries and treatises." *Id.* Staff argues that the intrinsic evidence likewise supports its construction. *Id.* at 19-22.

All parties assert that the plain and ordinary meaning of the term applies but have a different opinion as to what that is. CMIB at 35; RMIB at 33; SMIB at 19. The evidence shows that the plain and ordinary meaning of "grounded" is one that is not limited to zero voltage sources. As explained in "Introduction to Circuit Analysis": "Ground is an often misunderstood subject in electronics. Ground is a reference point in a circuit that provides a common return point to the

[11] According to SDC, "[t]he difference is that Staff's construction refers to 'the' voltage reference point, as opposed to 'a' reference point." CMIB at 37. Staff subsequently clarified that "Staff neither intended nor interprets its construction as limiting a circuit to a single voltage reference point." SMRB at 8 n.4. Thus, "[w]ith this clarification, Staff believes its proposed construction is fully aligned with that of [SDC]." *Id.*

voltage source." SMIB Ex. H. While the treatise explains that "[a] true ground reference . . . is one where the common return is the earth, which is a conductive medium," it also explains:

> Earth ground is not the only reference used in electronic systems. A chassis ground is one in which the common return point is now the chassis, or metal box, on which the circuit components are mounted. It may also be a large piece of copper foil on a printed circuit board, which is known as a trace. Any point of common return to the voltage source is then connected to this ground point.

Id. Similarly, a treatise entitled "Principles and Applications of Electrical Engineering" explains that "[t]he concept of a reference voltage finds a practical use in the ground voltage of a circuit. Ground represents a specific reference voltage that is usually a clearly identified point in a circuit." SMIB Ex. I; *see also* CMIB Ex. A at ¶ 47. Other treatises and technical dictionaries confirm that "ground" is not limited to earth ground. *See, e.g.*, SMIB Ex. J at 279 (defining "ground" to include "[t]he (usually negative) return point in a circuit"). Thus, while "ground" may include "earth ground," it is not so limited.

The specification uses the term "grounded" in a manner consistent with this plain and ordinary meaning. It includes the term "grounded" three times and the term "ground" once. '599 patent at 2:30, 5:14, 5:39, 7:1-2. In each instance, the term refers to the connection from the electroluminescent ("EL") element to ground. The accompanying figures show that the element is grounded through its connection to V_{SS}. First, Figure 1 of the patent shows a prior art circuit in which electroluminescent "element EL11 is connected between fifth transistor T15 and ground voltage VSS." '599 patent at 2:29-31.

FIG. 1
(PRIOR ART)

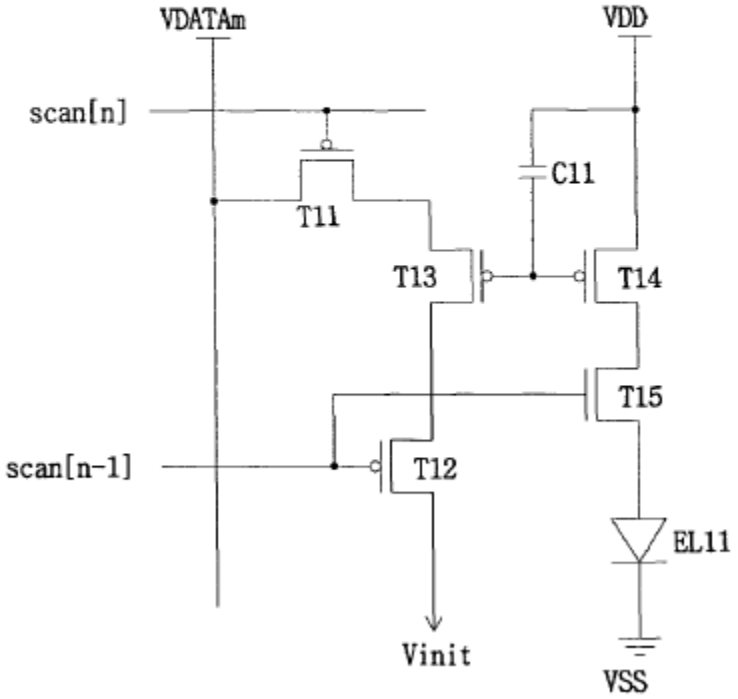

Id. at Fig. 1. Similarly, in the preferred embodiment, the specification notes that "the drain of transistor T36 is coupled to one terminal of EL element EL31," while "[t]he other terminal of EL element EL31 is grounded." *Id.* at 6:62-7:2:

FIG. 3

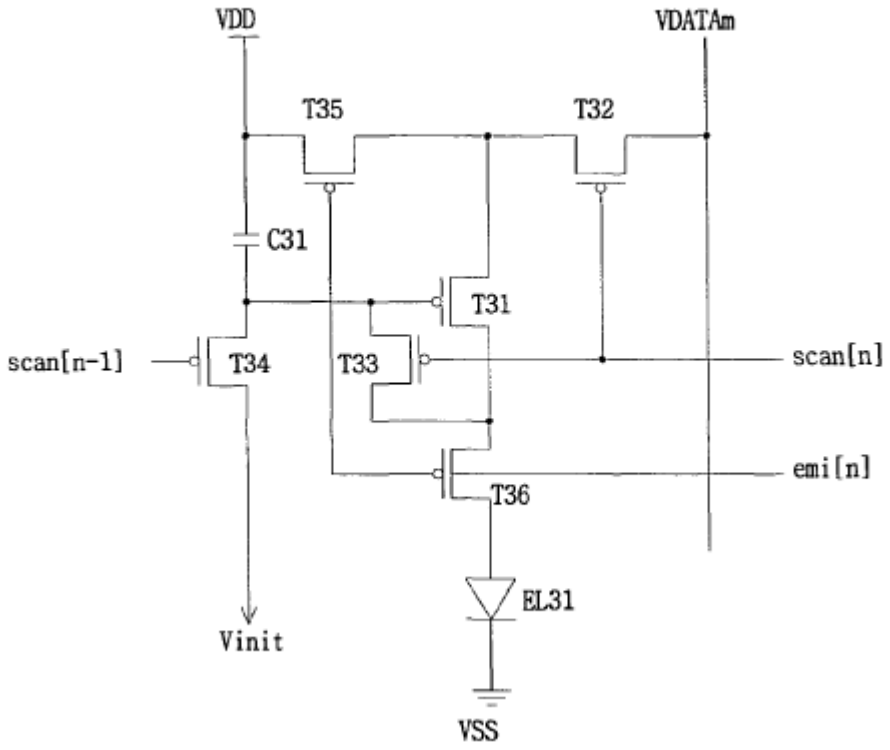

Id. at Fig. 3. The experts agree that V_{SS} is a reference voltage. CMIB Ex. A at ¶ 50("VSS is commonly understood to be a reference voltage."); RMIB Ex. A at ¶ 71 (explaining that "a circuit can have many different 'reference' voltages, such as. . . V_{SS}.") Further, as Respondents' expert acknowledges, while V_{SS} can have a voltage of zero, it does not typically have a voltage of zero. *See, e.g.*, *id.* at ¶ 58 ("[T]he V_{SS} voltage. . . will commonly differ from 0V.").

In both figures, V_{SS} appears with the symbol that has been used for Earth ground. *See, e.g.*, SMIB Ex. H at Fig. 4-32. Respondents argue that "[t]he fact that the specification labels this symbol with the Vss label further confirms that in this circuit, the voltage Vss (representing the low side of the logic circuit) is set to the Earth ground voltage of 0V." RMRB at 16. Even if one

of skill would interpret the figure to mean that Vss is set at 0V,[12] the Federal Circuit has cautioned that "it is improper to read limitations from a preferred embodiment described in the specification – even if it is the only embodiment – into the claims absent a clear indication in the intrinsic record that the patentee intended the claims to be so limited." *GE Lighting Sols., Inc. v. AgiLight, Inc.*, 750 F.3d 1304, 1309 (Fed. Cir. 2014). Respondents have not identified any other support in the specification to limit "grounded" to Earth ground.[13]

For the above reasons, in this Investigation, the term "grounded" will be given its plain and ordinary meaning, i.e., "coupled to a reference voltage."

7. "virtual quadrangle"

The term "virtual quadrangle" appears in claims 23, 45, 47, and 52 of the '578 patent. The parties disagree on the claim construction of this term and have proposed the following construction:

SDC	RESPONDENTS	STAFF
quadrangle formed by imaginary lines that can be superimposed to describe relationships among pixels	Indefinite	quadrangle formed by imaginary lines that can be superimposed to describe relationships among pixels

[12] As SDC's counsel noted: "[O]ver the years there has been inconsistent or precise ways that people have denoted ground." Tr. at 150:10-12. Likewise, Staff notes that the symbol is "clearly being used . . . as a different thing in this patent." *Id.* at 164:15-16. Notably, Respondents' expert did not cite to this symbol as evidence that "grounded" means Earth ground. I therefore decline to find that the use of this symbol in the '599 patent indicates that the patentee intended Vss to denote Earth ground without other evidence to support this understanding.

[13] Respondents argue that the use of the words "present invention" indicates that the patentee intended to limit the scope of the invention. RMIB at 34-35 (citing *Verizon Services Corp. v. Vonage Holding Corp.*, 503 F.3d 1295, 1308 (Fed. Cir. 2007)). In *Verizon Services*, the court held that "[w]hen a patent . . . describes the features of the 'present invention' as a whole, this description limits the scope of the invention." *Id.* The Earth ground symbol appears only in Figure 3 and is not discussed in the specification. The patent explains that Figure 3 illustrates "an embodiment of the present invention." '599 patent at 5:65-67. Thus, the patent does not discuss the "present invention" as a whole.

JC at 6.

Respondents argue that this term is indefinite "because a quadrangle could be drawn in multiple ways to connect four vertices." RMIB at 41. Respondents note that "the intrinsic record contains no guidance as to what constitutes a virtual quadrangle." *Id.* Respondents explain that "the Penguin Dictionary of Mathematics defines a 'quadrangle' as '[a] plane figure consisting of four points joined by lines' where '[n]o three of the points are collinear' (i.e., only two of the four points are on the same line)." *Id.* at 43. Thus, according to Respondents, a quadrangle can be either simple or complex, providing "multiple ways to draw a 'virtual quadrangle' between four vertices." *Id.* at 43-44. Respondents assert that the numerous meanings for the term mean that "a POSITA would not be able to discern whether an accused instrumentality does or does not infringe." RMRB at 20.

SDC argues that the '578 patent describes pixel arrangements using a number of terms familiar from geometry, such as quadrangle. CMIB at 40-41. SDC notes that "[t]hese are all common, well-understood words whose meaning would be understood by a POSITA." *Id.* at 41. According to SDC, "[a] quadrangle refers to a quadrilateral, i.e., a four-sided shape such as a square, rectangle, or parallelogram." CMRB at 19. SDC further asserts that a POSITA "would understand that a 'virtual quadrangle' refers to a quadrangle formed by imaginary lines that can be superimposed onto a display to describe relationships among pixels." CMIB at 41. SDC notes that "in an effort to conjure an indefiniteness argument, [Respondents] leave[] the field of invention and reach[] for an inapposite definition of 'quadrangle' from the Penguin Dictionary of Mathematics, for the mathematical concept of a 'complete' (or, as Mianyang BOE calls it, 'complex') quadrangle." CMRB at 19. SDC argues, however, that "[t]he claim language does not

refer to 'complete' quadrangles" and "there is no evidence or reason to suggest that a POSITA would think that a shape having six sides and seven points is a quadrangle." *Id.* at 20.

Staff notes that "Respondents' argument depends on construing 'virtual quadrangle' to encompass 'complex quadrangles,' as well as "simple quadrangles.'" SMRB at 19.[14] Staff asserts that "the term 'virtual quadrangle' refers to the typical, simple quadrangle as depicted in the specification, not a complex quadrangle." *Id.* at 21. Staff explains that "[t]here is no evidence that one of ordinary skill in the relevant art would have even been aware of quadrangles other than simple quadrangles, much less interpreted 'quadrangle,' to encompass 'complex' quadrangles." *Id.* According to Staff, "[t]he specification confirms that 'quadrangle' was intended to mean a simple quadrangle." *Id.* Staff also believes that the prosecution history confirms this understanding. *Id.* at 21-22.

As explained by Staff, "[a] 'simple' quadrangle is a quadrangle with no self-intersecting sides," such as the example below:

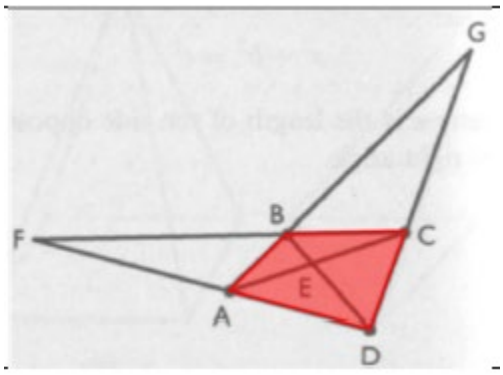

[14] Staff notes that the Penguin Dictionary of Mathematics uses the term "complete' quadrangles, as opposed to "complex" quadrangles. SMRB at 20. Staff states that "Staff understands Respondents' arguments to be based on 'complex' quadrangles, not 'complete' quadrangles." *Id.* I will also apply this understanding and will use the words "complete" and "complex" interchangeably.

SMIB at 20 (annotated figure from RMIB Ex. 12 at 3). In contrast, a "complex" quadrangle is a quadrangle with intersecting sides, as shown in the following two examples:

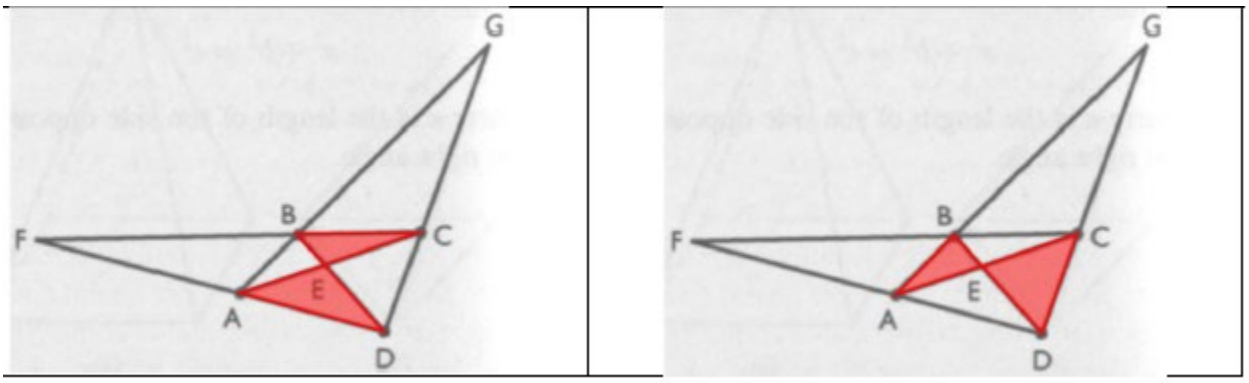

Id.

Respondents' argument hinges on the premise that a person of ordinary skill in the art would understand that a quadrangle can be either simple or complex and that it is unclear what definition is being used in the '578 patent. For Respondents view to be correct, there must be evidence that one of skill would ignore the commonly understood definition of the term and instead apply a more specialized definition from the field of mathematics. Respondents do not introduce sufficient evidence to support such a finding.

As explained above, a person of ordinary skill in the art would not be a mathematician, but would instead have a degree in Electrical Engineering, Computer Engineering, Materials Science, Physics, or the like, and experience in electroluminescence and the design of active matrix displays or pixel arrangements for such displays. Respondents have not introduced evidence to show that a person with this background would apply a specialized mathematical understanding to an otherwise commonly understood term. They do not, for example, introduce any evidence from their expert showing that he would have such an understanding. Without evidence that one of skill would view "quadrangle" through a specialized lens, I decline to find "quadrangle" as used in the '578 patent, refers to a "complete" quadrangle.

The intrinsic evidence provides support that the ’578 patent uses the word “quadrangle” consistent with its plain and ordinary meaning as a simple quadrangle. First, while the specification does not use the term “quadrangle,” it does define the synonym “quadrilateral.”[15] Specifically, it explains that a quadrilateral shape is a “four-sided” shape and indicates that squares, parallelograms, and rhombuses are examples of quadrilaterals. ’578 patent at 4:14-17 (referring to pixels having “a quadrilateral (i.e., four-sided) shape”); *see also id.* 4:17-19 (“For example, in the pixel arrangement of FIG. 1, each of the first pixels 100 has the same quadrilateral shape (e.g., a square or rhombus”); *id.* at 6:10-11 (“The plurality of first pixels 100 have the same quadrilateral shape (e.g., a parallelogram)”); 8:34-36 (“The second pixels 200 and third pixels 300 may have quadrilateral shapes (e.g., rhombus)”).

Further, during prosecution, the patentee annotated figures showing a “virtual quadrangle” in various pixel arrangements. First, in the January 27, 2020 Amendment, the patentee annotated Figures 1 and 5 of the Kim reference:

Applicant-annotated version of FIG. 5 of the present application	Applicant-annotated version of FIG. 1 of Kim
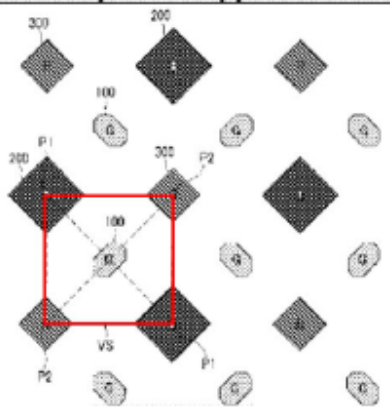	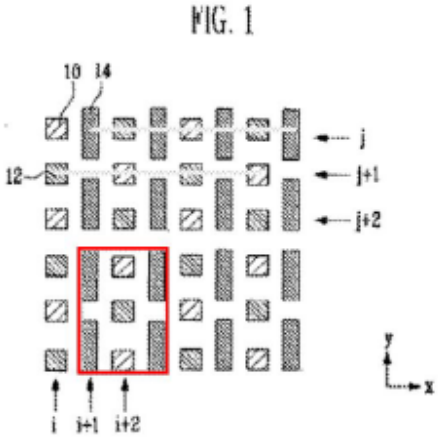

[15]SDC and Staff assert that “quadrangle” and “quadrilateral” are synonyms. *See* CMIB at 41; SMIB at 46; *see also* SMIB Ex. M (defining “quadrangle” as “quadrilateral”).

CMRB at 21 (annotated version of CMRB Ex. J at SDC-1351-0013328). The patentee noted that these figures did not teach "wherein only one of the second pixels and the third pixels is included in a virtual quadrangle . . .." CMRB Ex. J at SDC-1351-0013328. Instead, the applicant explained that, in Figure 1 "there are three of the alleged second and third pixels included in a virtual quadrangle formed by four neighboring ones of the alleged first pixels." *Id.* at SDC-1351-0013328-29. In both of these illustrations, the quadrangle is simple and not complex.

Next, in a July 25, 2020 amendment, the applicant annotated Figures 5 and 8A of the Credelle reference:

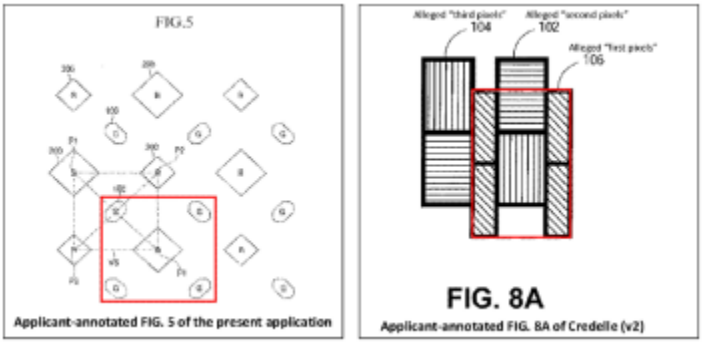

CMRB at 21 (annotated version of CMRB Ex. J at SDC-1333351). The applicant explained that Figure 8A discloses a virtual quadrangle but did not meet the other limitations. It contrasted that to the virtual quadrangle of Figure 5. CMRB Ex. J at SDC-001333350. Once again, the applicant's examples were simple quadrangles.

Finally, the applicant made similar statements in remarks accompanying May 3, 2021 and August 25, 2021 amendments. CMRB Ex. J at SDC-1351-00133607, 3859. These examples likewise depict a quadrangle in a manner that is consistent with its plain and ordinary meaning and not a "complex" or "complicated" quadrangle.

For the above reasons, in this Investigation, the term "virtual quadrangle" will be construed as "quadrangle formed by imaginary lines that can be superimposed to describe relationships among pixels."

8. "wherein a shortest distance between any two of the group of four neighboring ones of the plurality of first pixels is greater than a shortest distance between the only one of the second pixels and the third pixels included in the virtual quadrangle and a nearest one of the second pixels or the third pixels in a direction perpendicular to any side of the virtual quadrangle"

The term "wherein a shortest distance between any two of the group of four neighboring ones of the plurality of first pixels is greater than a shortest distance between the only one of the second pixels and the third pixels included in the virtual quadrangle and a nearest one of the second pixels or the third pixels in a direction perpendicular to any side of the virtual quadrangle" appears in claim 45 of the '578 patent. The parties disagree on the claim construction of this term and have proposed the following constructions:

SDC	RESPONDENTS	STAFF
wherein a shortest distance between any two of the four neighboring first pixels (as defined previously in the claim) is greater than a shortest distance between the second or third pixel included in the virtual quadrangle and a nearest one of the second or third pixels in a direction perpendicular to any side of the virtual quadrangle	Indefinite	wherein a shortest distance between any two of the four neighboring first pixels (as defined previously in the claim) is greater than a shortest distance between the second or third pixel included in the virtual quadrangle and a nearest one of the second or third pixels in a direction perpendicular to any side of the virtual quadrangle

JC at 6-7.

Respondents assert that this term is indefinite because a POSITA would not understand which pixel to use as a reference point to measure each claimed "shortest distance." RMIB at 46. Respondents note, for example, that there are three different methods of measuring the "shortest

distance between any two of the group of four neighboring ones of the plurality of first pixels," depending on which two of the "group of four neighboring" pixels are selected. *Id.* Respondents depict each of these three methods as green, blue, and red lines in the image below:

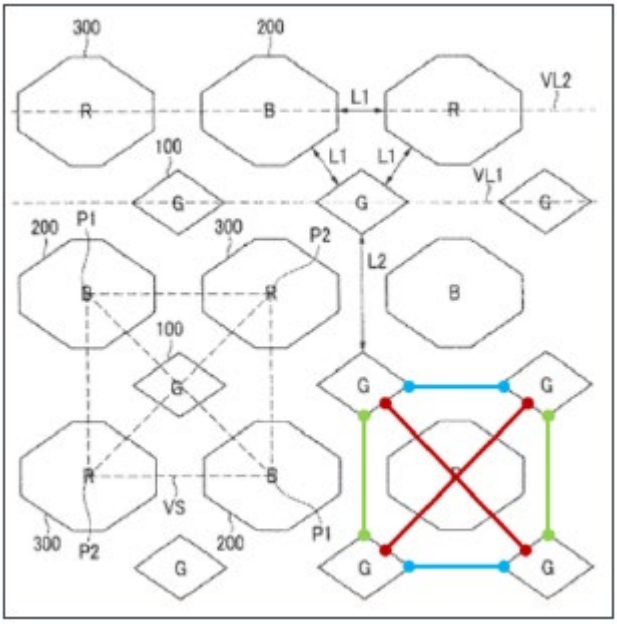

RMIB at 47. Likewise, Respondents assert that there are different ways to measure the "shortest distance between the only one of the second pixels and the third pixels included in the virtual quadrangle and a nearest one of the second pixels or the third pixels in a direction perpendicular to any side of the virtual quadrangle." *Id.* Respondents explain that, while there is only one starting point, "there are multiple ending points since this 'shortest distance' ends at "a nearest . . . [blue] pixel[] ***or*** . . . [red] pixel[] ***in a direction perpendicular to any side*** of the virtual quadrangle." *Id.* (quoting '548 patent cl. 45). Respondents note that "there are four sides to a 'virtual quadrangle' and thus at least four directions 'perpendicular to any side of the virtual quadrangle.'" *Id.* As one example, Respondents point to an image of a virtual square drawn by the applicant with arrows depicting the shortest distance to the nearest blue pixel in each direction (left image) and the nearest red pixel in each direction (right image):

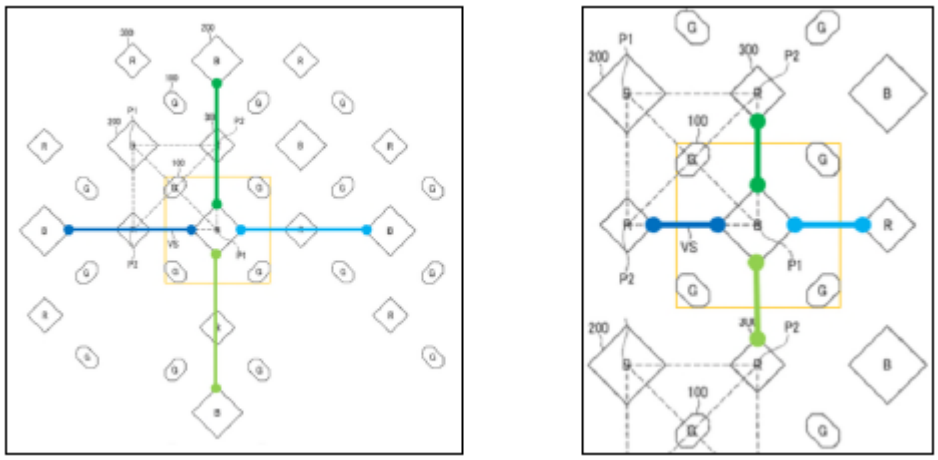

RMIB at 48 (annotated versions of the images shown in RMIB Ex. 13 at 8).

SDC asserts that a POSITA would understand what distances to use in the compairison. First, SDC asserts that one of skill would know to select the shortest distance "between any two of the group of four neighboring pixels." CMRB at 24. SDC also explains that a POSITA would understand that they must select the "nearest" of the second or third pixels outside of the virtual quadrangle. *Id.* at 25. Specifically, "a POSITA would know to measure all four distances and use the one that is the shortest." *Id.*

Staff asserts that "Respondents over-complicate what is needed to determine whether the 'a shortest distance …' limitation is satisfied." SMRB at 24. According to Staff, "[t]here is only one distance that satisfies the second claimed "shortest distance'": whichever of the second or third pixels is the "nearest." *Id.* Staff explains that "[a]t most, the limitation requires a compairison between the maximum value of one range and the minimum value of a second range." *Id.* Staff notes that "the full ranges do not need to be determined." *Id.* Instead, one of skill need only determine "the maximum value of the first range and the minimum value of the second range." *Id.* "The limtiation is met if (1) the maximum value of the first range is greater than (2) the minimum

value of the second range." *Id.* at 25. In constrast, "[t]he limitation is not met if (1) the maximum value of the first range is equal to or less than (2) the minimum value of the second range." *Id.*

As Respondents note, the determination of whether or not an accused product infringes depends on how the distance is measured. For example, in the left-hand image, the second distance is the distance to the nearest blue pixel. In the right-hand image, the second distance is the distance to the nearest red pixel:

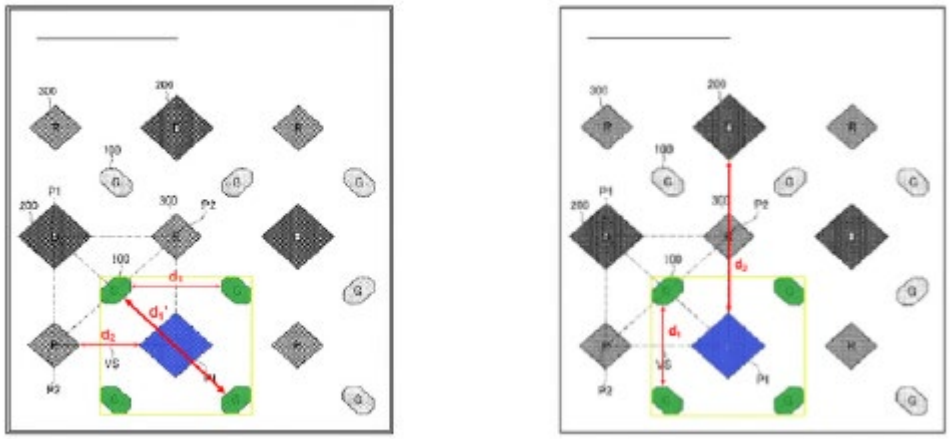

RMRB at 25 (annoted versions of Fig. 5 of the '548 patent). In the left-hand image, the first distance (d_1) is greater than the second distance (represented by d_2) and thus the accused product would meet the claim limitation. In the right-hand image, the first distance (d_1) is shorter than the second distance (represented by d_2) and thus the accused product would <u>not</u> infringe. The claim langauge, however, informs a person of ordinary skill in the art which distance (d_2) they should select. Specifically, the claim langauge states: "a shortest distance between the only one of the second pixels and the third pixels included in the virtual quadrangle ***and a nearest one*** of the second pixels or the third pixels in a direction perpendicular to any side of the virtual quadrangle." '578 patent at cl. 45 (emphasis added). Thus, one of skill would understand that they should select whichever distance is shorter. In the above example, they would select the distance represented by the left-hand image.

Likewise, for distance d_1, the claim language clarifies that a person of skill in the art should select the "shortest distance between any two of the group of four neighboring ones of the plurality of first pixels." Thus, even where there is, for example, three different measurements, one of skill would understand to select the shortest of the three. Because the claim language provides guidance on which measurements to use, I do not agree with Respondents that this claim term is indefinite.

During the *Markman* hearing, Respondents point to comments made by Staff to assert that one would not understand the words "any" or "nearest" to provide guidance to selecting the distance to be measured. According to Respondents, Staff asserts that the claim term requires calculating the shortest distance between the two neighboring first pixels that are furthest apart. Tr. at 209:16-21. Respondents also assert that Staff "leaves open . . . the possibility that a nearest one could be interpreted to modify both the second pixels or the third pixels such that the second claimed shortest distance refers to two distances – the shortest distance to the nearest second pixel and the shortest distance to the nearest third pixel." Tr. at 210:25-211:6. To the extent that Staff's interpretation of the claim term differs from SDC, however, the record still lacks evidence as to whether a person of ordinary skill in the art would fail to understand which distances to select. Respondents have not introduced any testimony from one of skill as to this term. Nor have they introduced other evidence to show that the plain language of the claim term is unclear. Without such evidence, Respondents cannot meet their burden to show that this term is indefinite.

For the above reasons, in this Investigation, the term "wherein a shortest distance between any two of the group of four neighboring ones of the plurality of first pixels is greater than a shortest distance between the only one of the second pixels and the third pixels included in the virtual quadrangle and a nearest one of the second pixels or the third pixels in a direction perpendicular to any side of the virtual quadrangle" will be construed as "wherein a shortest

distance between any two of the four neighboring first pixels (as defined previously in the claim) is greater than a shortest distance between the second or third pixel included in the virtual quadrangle and a nearest one of the second or third pixels in a direction perpendicular to any side of the virtual quadrangle."

SO ORDERED.

Bryan F. Moore
Administrative Law Judge