US 20130034158A1

(19) United States

(12) Patent Application Publication

KIRCHHOFFER et al.

(10) Pub. No.: US 2013/0034158 A1

(43) Pub. Date: Feb. 7, 2013

(54) **APPARATUS FOR INTRA PREDICTING A BLOCK, APPARATUS FOR RECONSTRUCTING A BLOCK OF A PICTURE, APPARATUS FOR RECONSTRUCTING A BLOCK OF A PICTURE BY INTRA PREDICTION**

(71) Applicant: **Fraunhofer-Gesellschaft zur Foerderung der angew**, Munich (DE)

(72) Inventors: **Heiner KIRCHHOFFER**, Berlin (DE); **Detlev MARPE**, Berlin (DE)

(73) Assignee: **Fraunhofer-Gesellschaft zur Foerderung der angewandten Forschung e.V.**, Munich (DE)

(21) Appl. No.: **13/649,258**

(22) Filed: **Oct. 11, 2012**

Related U.S. Application Data

(63) Continuation of application No. PCT/EP2010/054836, filed on Apr. 13, 2010.

Publication Classification

(51) **Int. Cl.**
H04N 7/32 (2006.01)

(52) **U.S. Cl.** **375/240.12**; 375/E07.243; 375/E07.211

(57) **ABSTRACT**

An apparatus for intra predicting a block to be predicted of a picture from neighboring image samples sequentially extending along two rays starting at a common intersection point and pointing into different directions, the neighboring image samples including edge neighboring samples bordering the block to be predicted, includes a smoothing filter and a determiner. The smoothing filter is configured to one-dimensionally filter the neighboring image samples, which are sequentially arranged into a sequence by anti-parallelly traveling along a first one of the two rays and parallelly traveling along a second one of the two rays to obtain a filtered image sample sequence. The determiner is configured to determine a prediction value for a predetermined image sample of the block to be predicted by using the filtered image sample sequence.

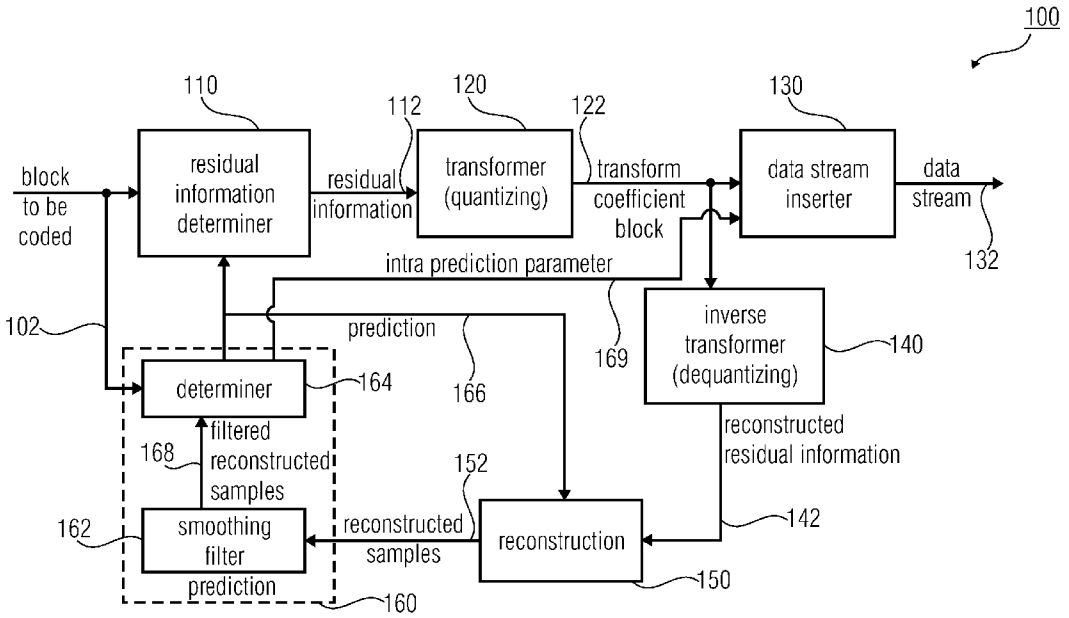

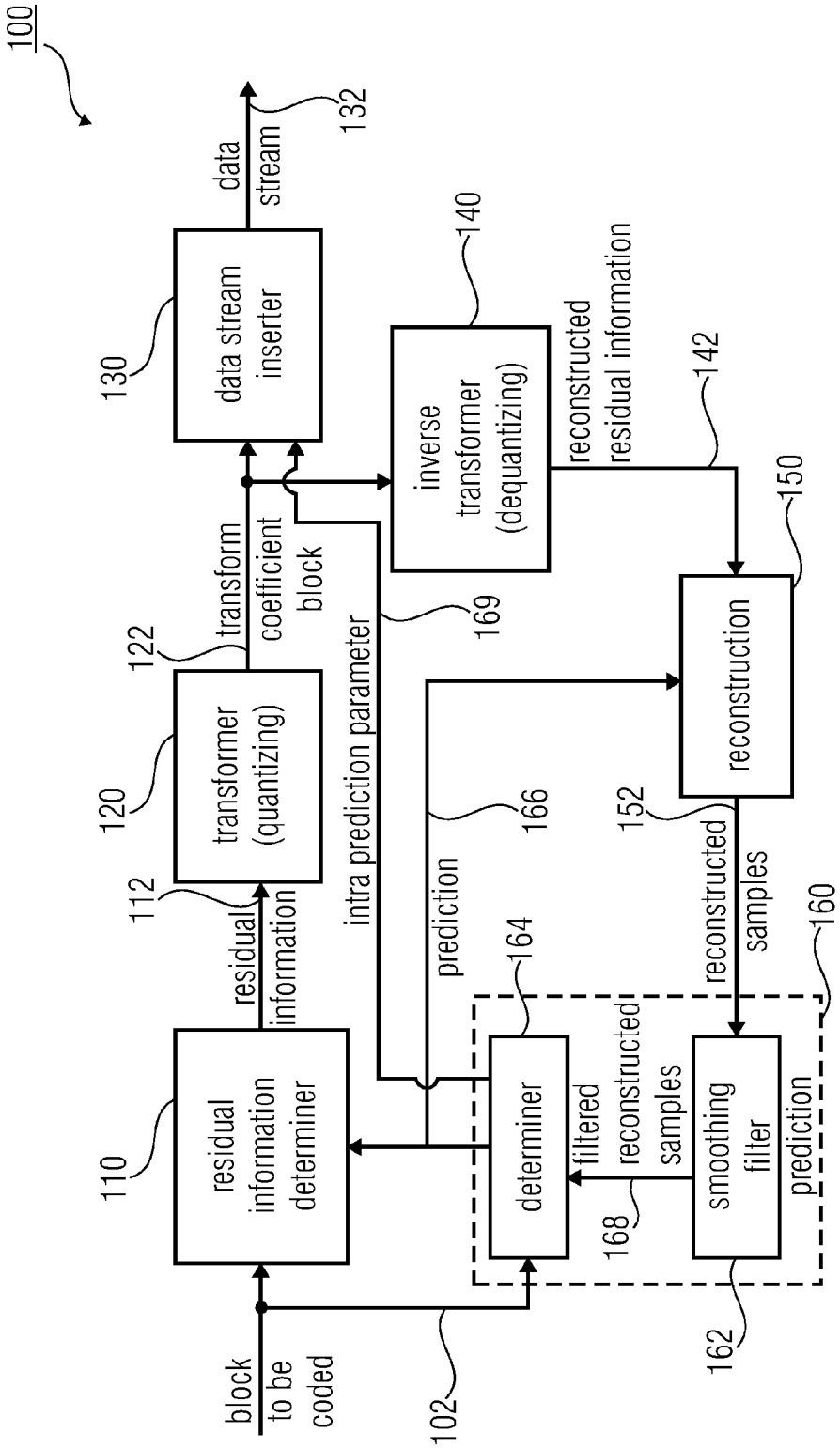
100
data stream
132
data stream inserter
130
transform coefficient block
122
transformer (quantizing)
120
residual information
112
residual information determiner
110
block to be coded
102
intra prediction parameter
169
prediction
166
determiner
164
filtered reconstructed samples
168
smoothing filter
162
prediction
160
inverse transformer (dequantizing)
140
reconstructed residual information
142
reconstruction
150
reconstructed samples
152

FIG 1

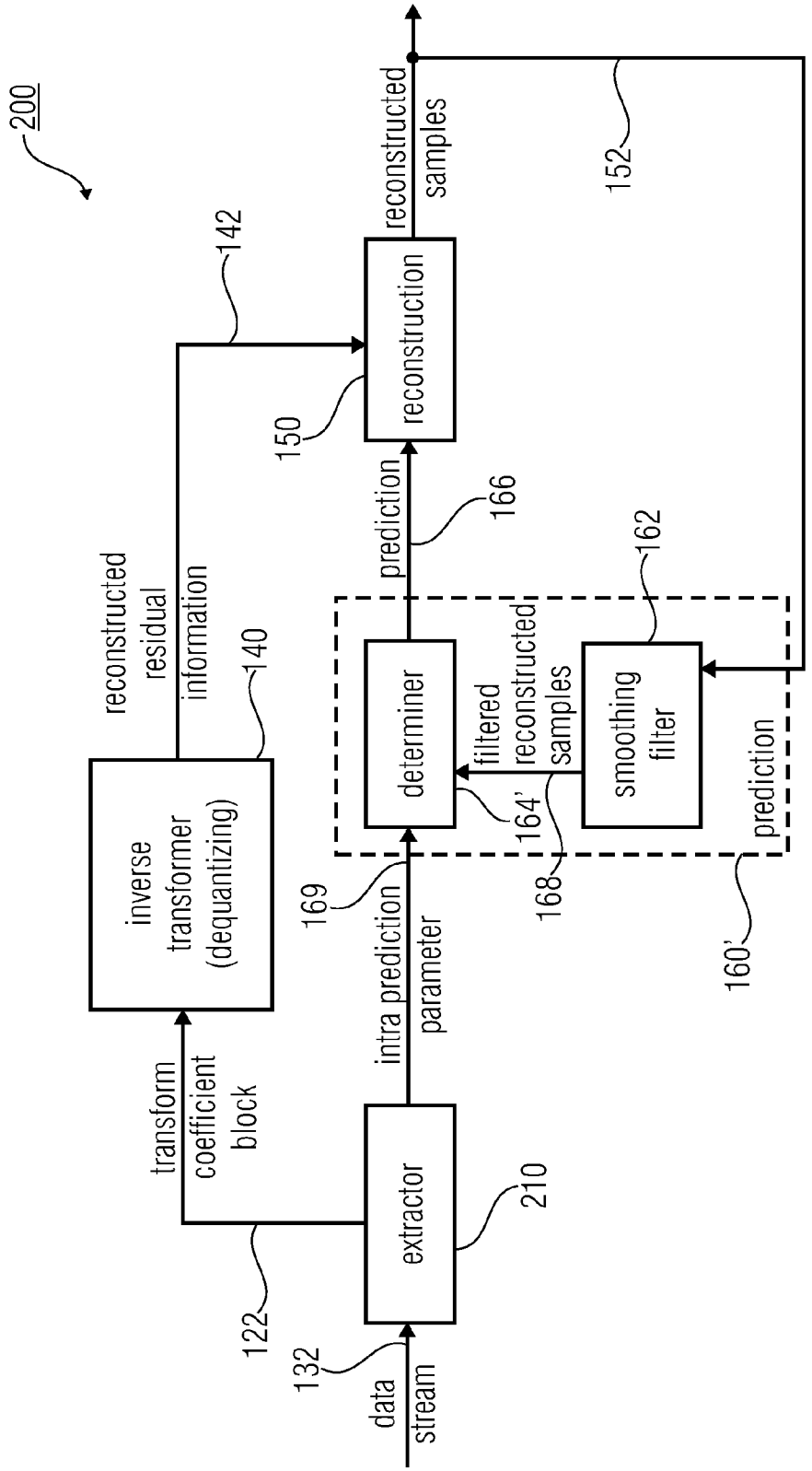
200
data stream
132
122
transform coefficient block
extractor
210
intra prediction parameter
169
inverse transformer (dequantizing)
140
reconstructed residual information
142
determiner
164'
filtered reconstructed samples
168
smoothing filter
162
prediction
160'
prediction
166
reconstruction
150
reconstructed samples
152

FIG 2

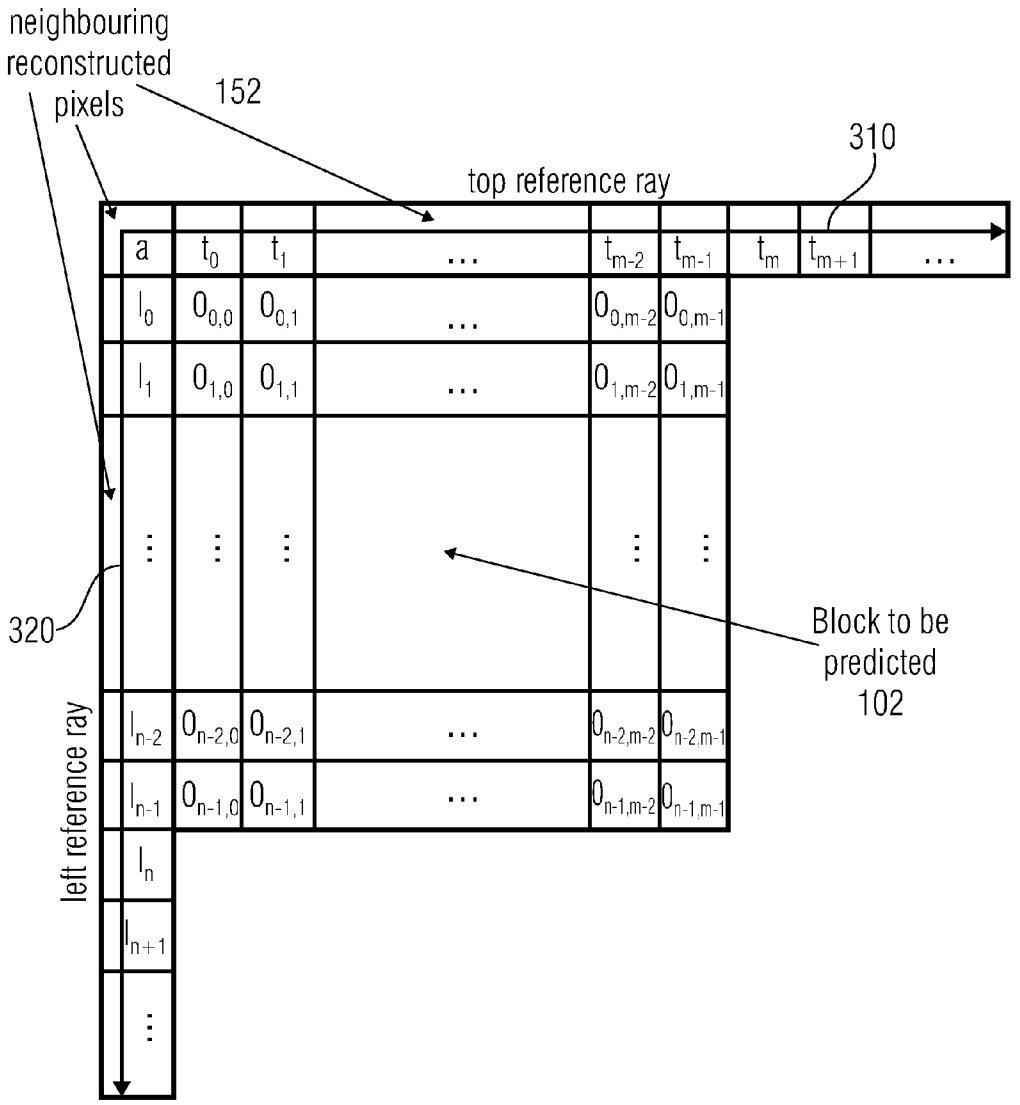
neighbouring reconstructed pixels
152
310
top reference ray
a
t_0
t_1
...
t_{m-2}
t_{m-1}
t_m
t_{m+1}
...
l_0
$0_{0,0}$
$0_{0,1}$
$0_{0,m-2}$
$0_{0,m-1}$
l_1
$0_{1,0}$
$0_{1,1}$
$0_{1,m-2}$
$0_{1,m-1}$
320
Block to be predicted 102
left reference ray
l_{n-2}
$0_{n-2,0}$
$0_{n-2,1}$
$0_{n-2,m-2}$
$0_{n-2,m-1}$
l_{n-1}
$0_{n-1,0}$
$0_{n-1,1}$
$0_{n-1,m-2}$
$0_{n-1,m-1}$
l_n
l_{n+1}

FIG 3

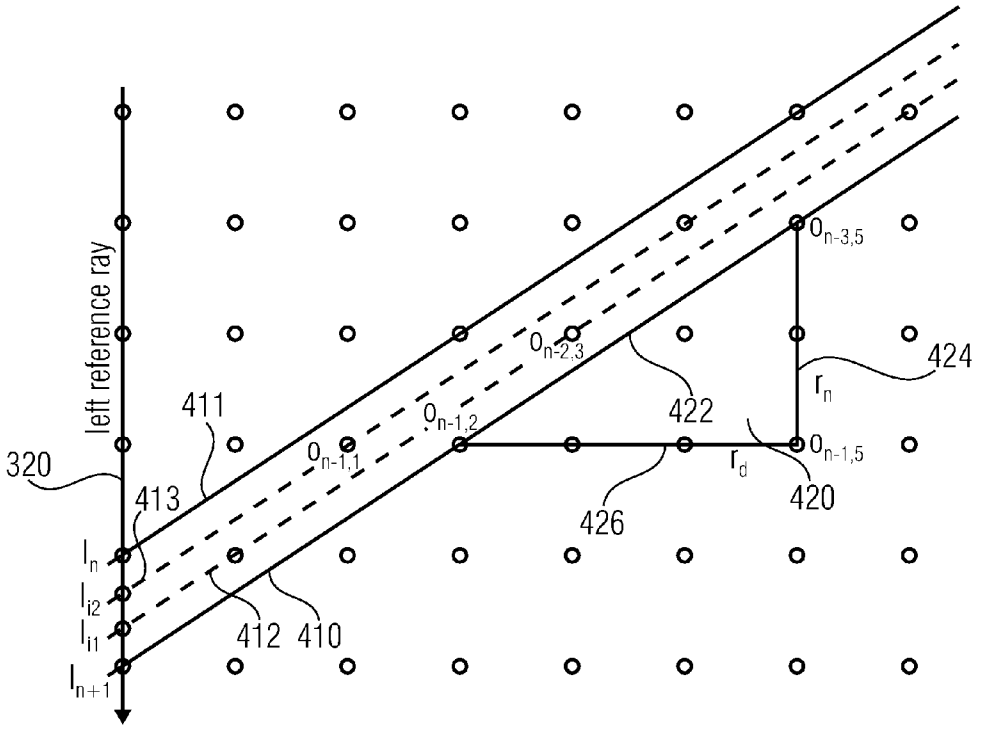

$$r = \frac{r_n}{r_d}$$

FIG 4

FIG 5

mode index	mode name	type	slope r	interpolation filter	reference ray to predict from
0	North	Directional	∞	FP: [1] HP: -	-
1	West	Directional	0	FP: [1] HP: -	-
2	DC	DC	-	-	-
3	Northeast	Directional	1	FP: [1/4 1/2 1/4]	Top ray
4	Northwest	Directional	-1	FP: [1/4 1/2 1/4]	-
5	North-northwest	Directional	-2	FP: [1/4 1/2 1/4] HP: [1/2 1/2]	-
6	West-northwest	Directional	-1/2	FP: [1/4 1/2 1/4] HP: [1/2 1/2]	-
7	North-northeast	Directional	2	FP: [1/4 1/2 1/4] HP: [1/2 1/2]	Top ray
8	West-southwest	Directional	1/2	FP: [1/4 1/2 1/4] HP: [1/2 1/2]	Left ray

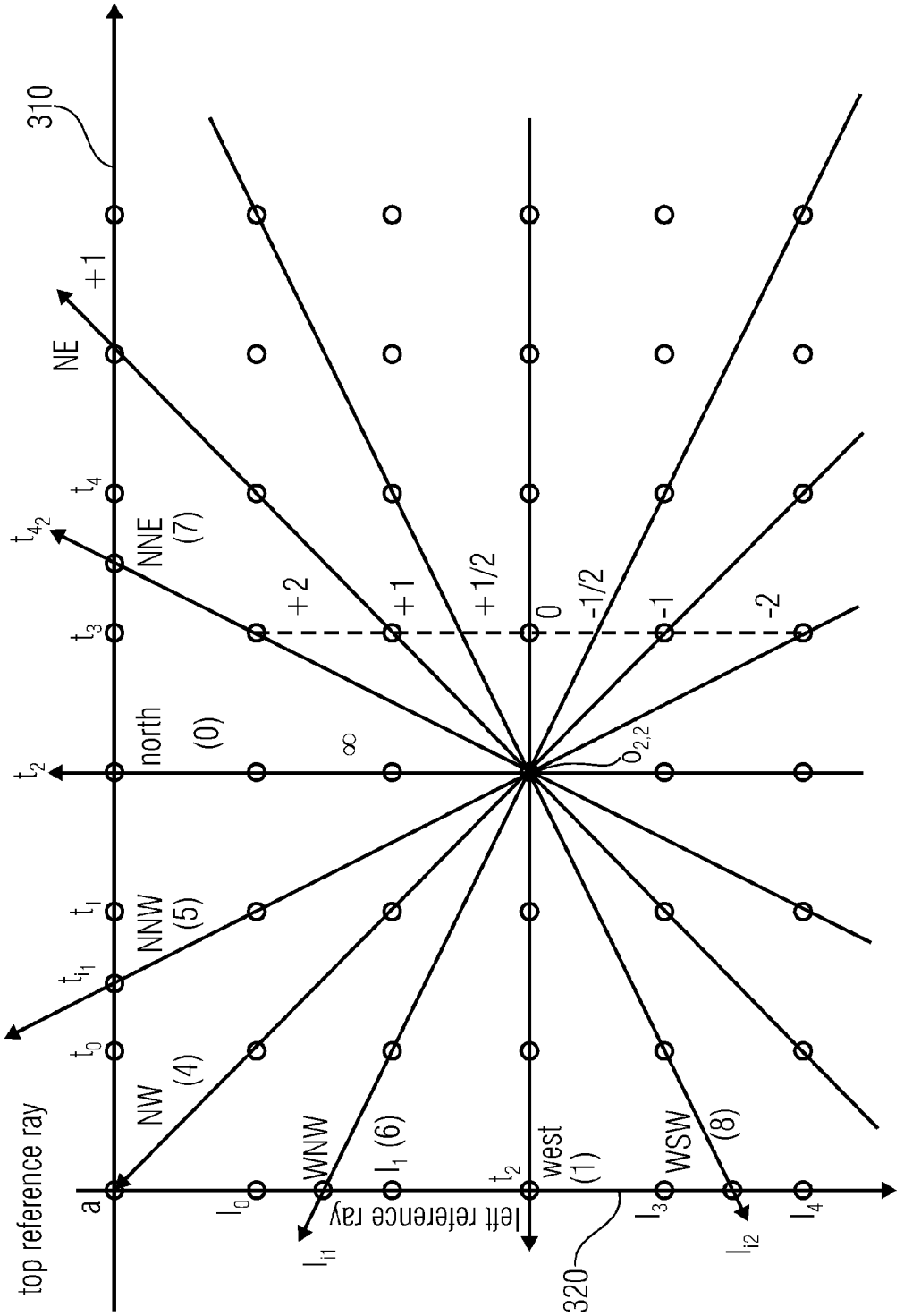
310
NE
+1
t_4
t_{4_2}
NNE
(7)
t_3
+2
+1
+1/2
0
-1/2
-1
-2
t_2
north
(0)
∞
$o_{2,2}$
t_1
t_{1_1}
NNW
(5)
t_0
NW
(4)
top reference ray
a
l_0
WNW
l_1 (6)
t_2
west
(1)
l_3
WSW
(8)
l_4
l_{11}
left reference ray
320
l_{12}

FIG 6

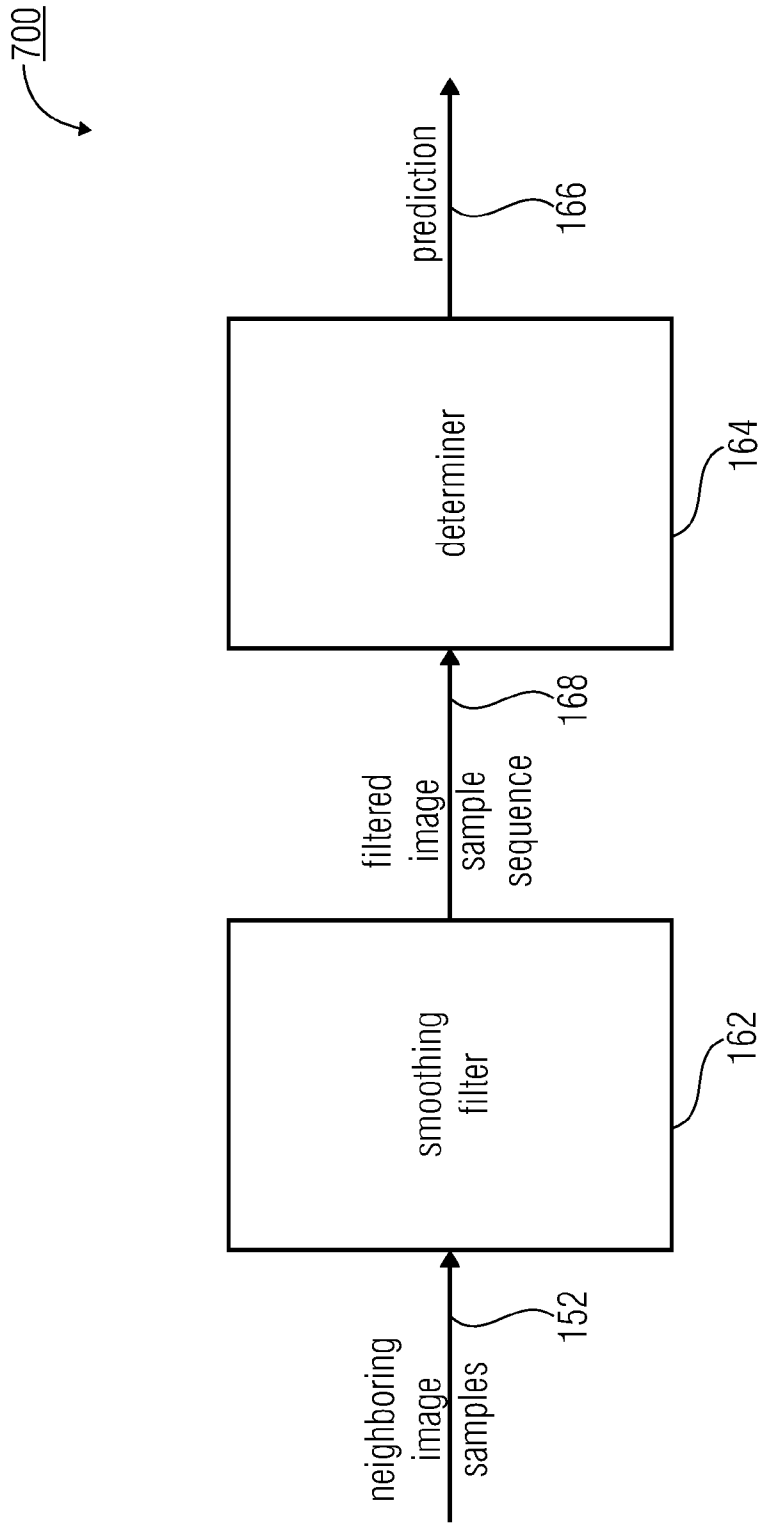
700
neighboring image samples
152
smoothing filter
162
filtered image sample sequence
168
determiner
164
prediction
166

FIG 7

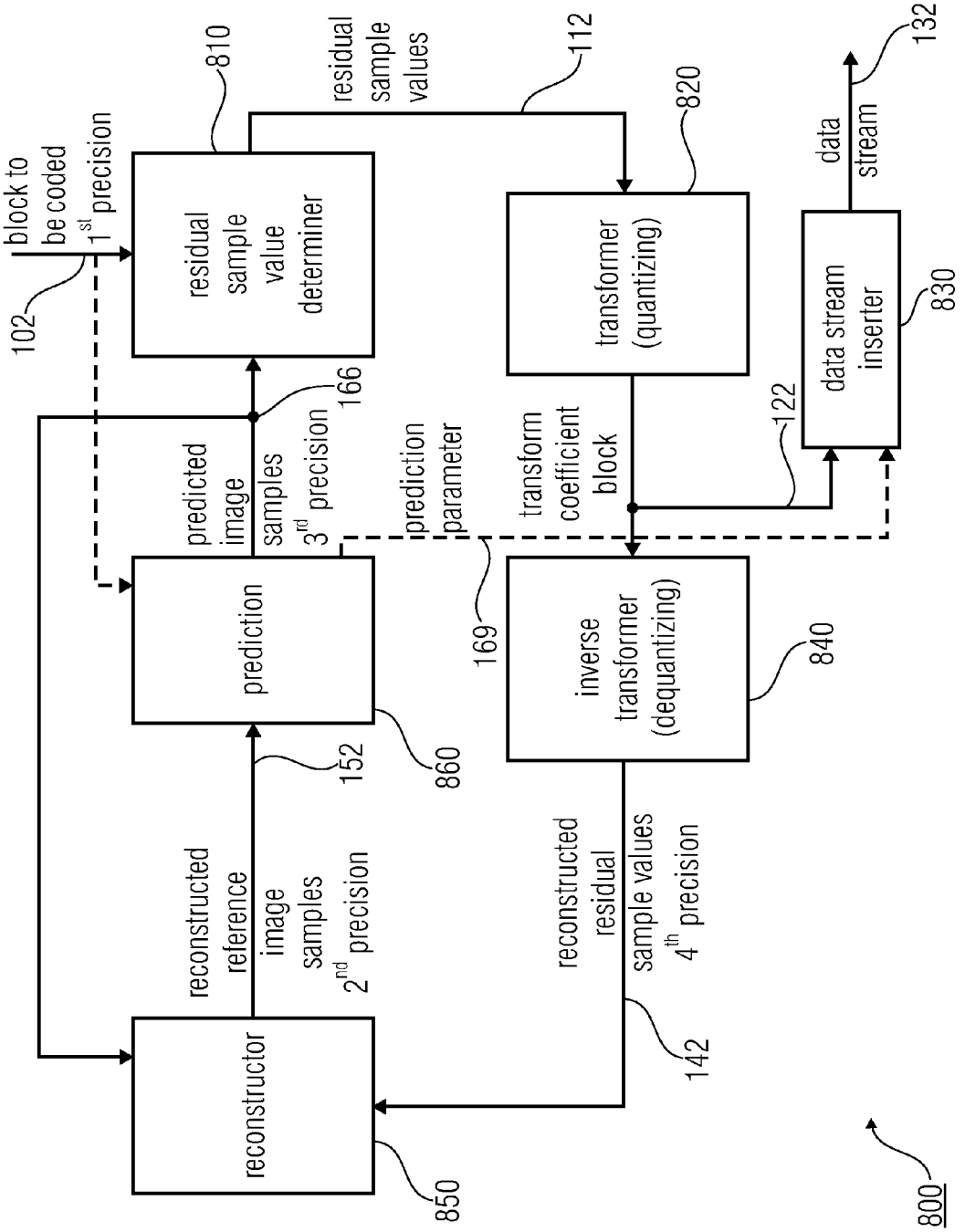
block to be coded 1st precision
102
residual sample value determiner
810
residual sample values
112
transformer (quantizing)
820
data stream
132
data stream inserter
830
122
transform coefficient block
prediction parameter
169
inverse transformer (dequantizing)
840
predicted image samples 3rd precision
166
prediction
860
152
reconstructed reference image samples 2nd precision
reconstructed residual sample values 4th precision
142
reconstructor
850
800

FIG 8

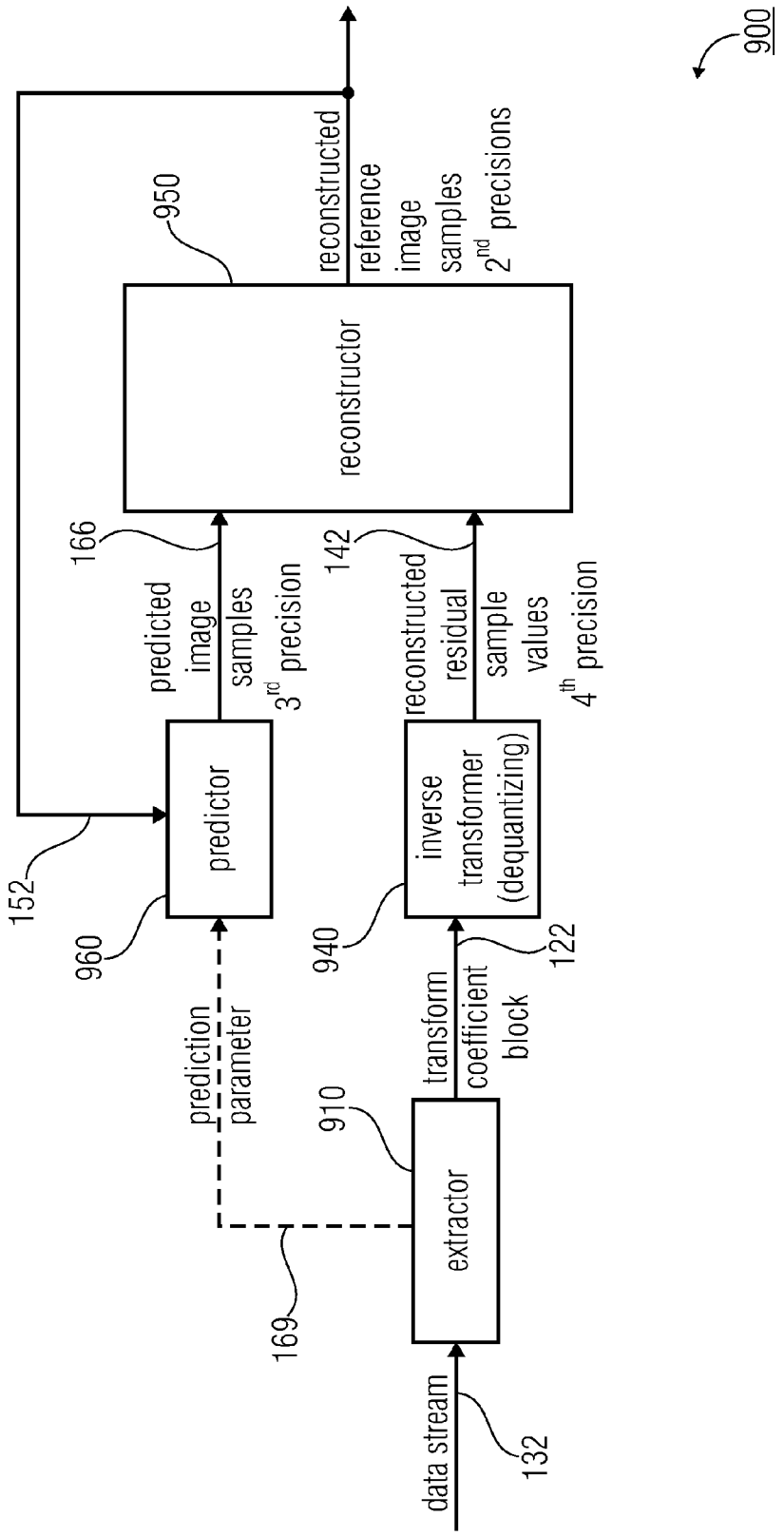
900
reconstructed reference image samples 2nd precisions
950
reconstructor
166
predicted image samples 3rd precision
142
reconstructed residual sample values 4th precision
152
predictor
960
inverse transformer (dequantizing)
940
122
prediction parameter
transform coefficient block
910
extractor
169
data stream
132

FIG 9

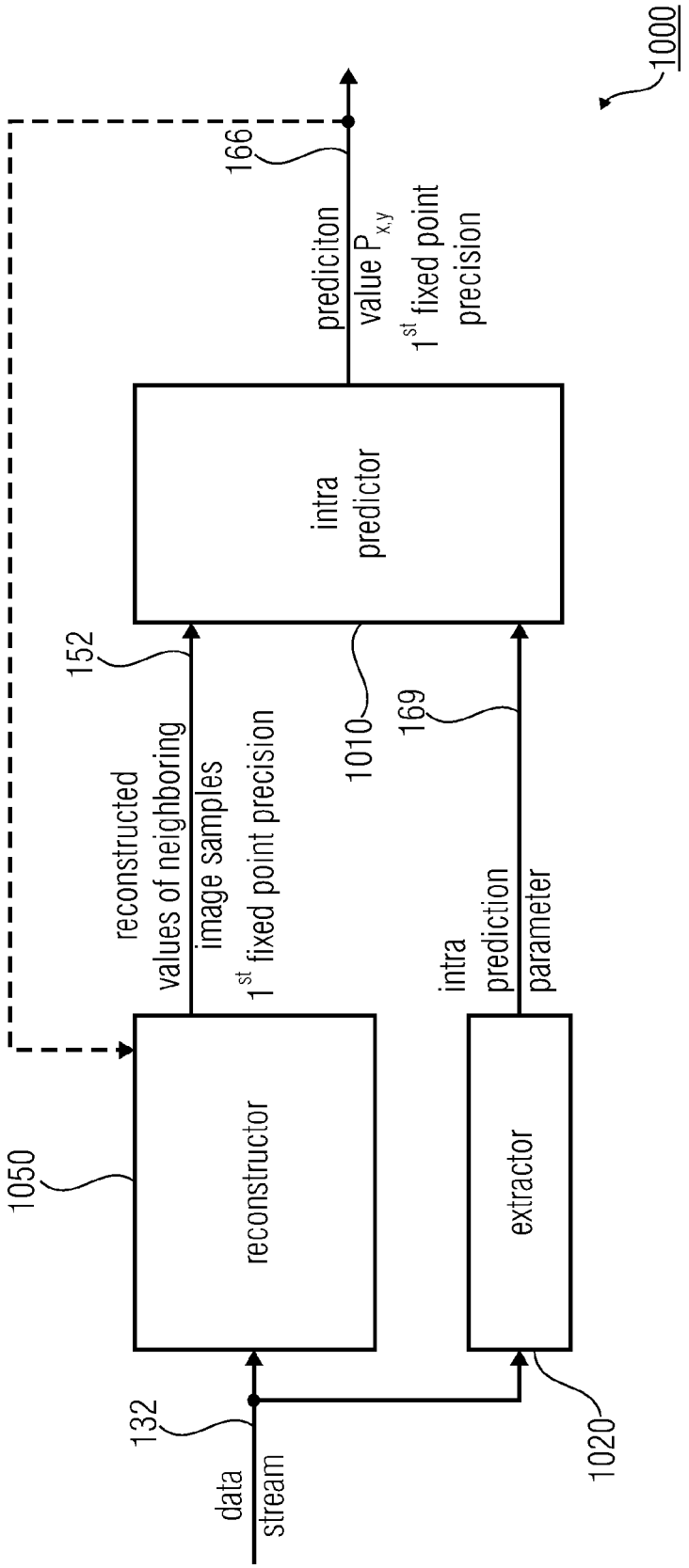
1000
166
prediciton value $P_{x,y}$
1st fixed point precision
intra predictor
152
reconstructed values of neighboring image samples
1st fixed point precision
1010
169
intra prediction parameter
1050
reconstructor
extractor
132
data stream
1020

FIG 10

APPARATUS FOR INTRA PREDICTING A BLOCK, APPARATUS FOR RECONSTRUCTING A BLOCK OF A PICTURE, APPARATUS FOR RECONSTRUCTING A BLOCK OF A PICTURE BY INTRA PREDICTION

CROSS-REFERENCE TO RELATED APPLICATIONS

[0001] This application is a continuation of copending International Application No. PCT/EP2010/054836, filed Apr. 13, 2010, which is incorporated herein by reference in its entirety.

[0002] Embodiments of the present invention relate to an apparatus for intra predicting a block of a picture. Further embodiments of the present invention relate to an apparatus for reconstructing a block of a picture by prediction. Further embodiments of the present invention relate to an apparatus for reconstructing a block of a picture by intra prediction. Embodiments of the present invention my be applicable in decoders and/or encoders, which are used in video coding.

BACKGROUND OF THE INVENTION

[0003] In the video coding of conventional-technology, the components of a video frame are predicted either by motion compensated prediction, using the reconstructed color components of previous pictures, or by intra prediction, using previously reconstructed blocks of the same picture (see, for example, Thomas Wiegand, Gary J. Sullivan, Gisle Bjontegaard, and Ajay Luthra: Overview of the H.264/AVC Video Coding Standard, IEEE Tran. on Circuits and Systems for Video Technology, Vol. 13, No. 7, pp. 560-576, July 2003). The residual signal, i.e. the difference between the original color components and the corresponding prediction signals, is usually coded using transform coding (a combination of a decorrelating transform, quantization of transform coefficients, and entropy coding of the resulting quantization symbols). When the picture is comprised of multiple color components (planes), the prediction can either be done separately or can be grouped by sharing the prediction information (plane grouping). Motion compensated prediction can be done for some sub-regions of a picture (see, for example, Thomas Wiegand, Markus Flierl, and Bernd Girod: Entropy-Constrained Design of Quadtree Video Coding Schemes, Proc. 6th IEE Intern. Conf. on Image Processing and its Applications, Dublin, Ireland, July 1997.2). Usually, the sub-regions are rectangular blocks of samples. But it is also conceptually possible to use the same motion parameters for an arbitrary set of samples. The motion parameters are included in the bitstream and transmitted to the decoder. It is possible to use arbitrary motion models. Commonly, the motion is modeled using a translational motion model, in which case a motion vector (2 parameters) specifying a displacement is transmitted for each region. Other common motion models include the affine motion model (6 parameters), 3-, 4-, and 8-parameter models. The motion parameters can be transmitted with arbitrary accuracy. For example, for the translational motion model, the motion vectors could be coded using full-sample accuracy or sub-sample accuracy (e.g. quarter-sample accuracy). In the first case, the prediction samples can be directly copied from the reconstructed pictures. In the case of sub-sample accurate motion vectors (or general motion parameters), the prediction samples are interpolated using the reconstructed samples. The state-of-the-art interpolation methods use FIR filtering. Recently, adaptive FIR filters (see, for example, Thomas Wedi, Adaptive Interpolation Filter for Motion Compensated Hybrid Video Coding, Proc. Picture Coding Symposium (PSC 2001), Seoul, Korea, April 2001) were proposed for improved motion compensated prediction. Any of the previously transmitted pictures can be used for motion compensation (see, for example, Thomas Wiegand, Xiaozheng Zhang, and Bernd Girod: Long-Term Memory Motion-Compensated Prediction, IEEE Transactions on Circuits and Systems for Video Technology, Vol. 9, No. 1, pp. 70-84, February 1999). If the reference picture is not fixed by high-level parameters, reference indices can be transmitted to identify the used reference pictures. It is also possible to modify the prediction signal using a weighting factor and an offset (often referred to as weighted prediction), or any other weighting function to obtain the final prediction signal. Furthermore, several prediction signals can be combined to obtain the final prediction signal. This is often referred to as multi-hypothesis prediction (see, for example, Sullivan, G.; Multi-hypothesis motion compensation for low bit-rate video coding, IEEE International Conference on Acoustics, Speech and Signal Proc. Vol. 5, 1993). The combined prediction signal can, for example, be obtained by a weighted sum of different prediction signals. The individual prediction signals can stem from same or different upsampled reference pictures. If two prediction signals are combined, the multi-hypotheses prediction is also referred to as bi-prediction (as supported in B-slices of modern video coding standards). It is, however, also possible to use more than two hypotheses. The entropy coding of the quantized transform coefficients can be done, for example, by variable-length coding or (adaptive) arithmetic coding (see, for example, Detlev Marpe, Heiko Schwarz, and Thomas Wiegand: Context-Based Adaptive Binary Arithmetic Coding in the H264/AVC Video Compression Standard, IEEE Tran. on Circuits and Systems for Video Technology, Vol. 13, No. 7, pp. 620-636, July 2003).

[0004] However, in video coding, there is a desire to improve a compression efficiency of the transmitted information and to reduce a computational load in video coding.

SUMMARY

[0005] According to an embodiment, an apparatus for intra predicting a block to be predicted of a picture from neighboring image samples sequentially extending along two rays starting at a common intersection point and pointing into different directions, the neighboring image samples having edge neighboring samples bordering the block to be predicted, may have: a smoothing filter configured to one-dimensionally filter the neighboring image samples sequentially arranged into a sequence by anti-parallelly traveling along a first one of the two rays and parallelly traveling along a second one of the two rays to achieve a filtered image sample sequence; and a determiner configured to determine a prediction value for a predetermined image sample of the block to be predicted by using the filtered image sample sequence.

[0006] According to another embodiment, an apparatus for reconstructing a block of a picture defined in a first precision by prediction may have: a reconstructor configured to reconstruct reference image samples from a data stream at a second precision being equal to or greater than the first precision to achieve reconstructed reference image samples; an extractor configured to extract a transform coefficient block from the data stream; a predictor configured to determine predicted

image samples for the block from the reconstructed reference image samples at a third precision higher than the second precision; an inverse transformer configured to apply an inverse spectral decomposition transform to the transform coefficient block to achieve reconstructed residual sample values for the block at a fourth precision greater than the first precision; and wherein the reconstructor is further configured to reconstruct the block by summation of the predicted image samples and the reconstructed residual sample values at an increased precision equal to or greater than at least one of the third and fourth precisions and reducing a result of the summation having the increased precision down to the second precision.

[0007] According to another embodiment, an apparatus for encoding a block of a picture defined in a first precision may have: a reconstructor configured to reconstruct reference image samples at a second precision being equal to or greater than the first precision to achieve reconstructed reference image samples; a predictor configured to determine predicted image samples for the block from the reconstructed reference image samples at a third precision higher than the second precision; a residual sample value determiner configured to compare the predicted image samples and original image samples of the block of the picture defined in the first precision to determine residual sample values for the block; a transformer configured to apply a spectral decomposition transform to the achieved residual sample values and use a quantization to achieve a transform coefficient block; an inverse transformer configured to apply an inverse spectral decomposition transform to the transform coefficient block to achieve reconstructed residual sample values for the block at a fourth precision greater than the first precision; wherein the reconstructor is further configured to achieve reconstructed image samples of the block by summation of the predicted image samples and the reconstructed residual sample values at an increased precision equal to or greater than at least one of the third and fourth precisions and reducing a result of the summation having the increased precision down to the second precision; and a data stream inserter configured to insert the transform coefficient block into a data stream.

[0008] According to another embodiment, an apparatus for reconstructing a block of a picture by intra prediction may have: a reconstructor configured to determine reconstructed values of neighboring image samples of the picture, neighboring the block from a data stream, at a first fixed point precision; an extractor configured to extract an intra-prediction parameter from the data stream; and an intra predictor configured to determine a prediction value for a predetermined image sample of the block from the reconstructed values of the neighboring image samples by performing an interpolation between the reconstructed values of the neighboring image samples at an intersection between a line crossing the predetermined image sample and extending in a predetermined direction selected from a set of possible directions in dependence of the intra-prediction parameter and a line along which the reconstructed neighboring image samples serially extend, with, for a subset of the possible directions, provisionally performing the interpolation at a second fixed point precision increased relative to the first fixed point precision by an amount depending on the predetermined direction and then rounding the prediction value to the first prediction.

[0009] According to another embodiment, a method for intra predicting a block to be predicted of a picture from neighboring image samples sequentially extending along two rays, starting at a common intersection point and pointing into a different direction, the neighboring image samples having edge neighboring samples bordering the block to be predicted, may have the steps of: one-dimensionally filtering the neighboring image samples sequentially arranged into a sequence by anti-parallelly traveling along a first one of the two rays and parallelly traveling along a second one of the two rays to achieve a filtered image sample sequence; and determining a prediction value for a predetermined image sample of the block to be predicted by using the filtered image sample sequence.

[0010] According to another embodiment, a method for reconstructing a block of a picture defined in a first precision by prediction may have the steps of: reconstructing a reference image sample from a data stream at a second precision being equal to or greater than the first precision; extracting a transform coefficient block for the block from the data stream; determining predicted image samples for the block from the reconstructed reference image samples at a third precision higher than the second precision; applying an inverse spectral decomposition transform to the transform coefficient block to achieve reconstructed residual sample values for the block at a fourth precision greater than the first precision; and reconstructing the block by summation of the predicted image samples and the reconstructed residual sample values at an increased precision equal to or greater than at least one of the third and fourth precisions and reducing a result of the summation having the increased precision down to the second precision.

[0011] According to another embodiment, a method for encoding a block of a picture defined in a first precision may have the steps of: reconstructing reference image samples at a second precision being equal or greater than the first precision; determining predicted image samples for the block from the reconstructed reference image samples at a third precision higher than the second precision; comparing the predicted image samples and original image samples of the block of the picture defined in the first precision to determine residual sample values for the block; applying a spectral decomposition transform to the achieved residual sample values and using a quantization to achieve a transform coefficient block; applying an inverse spectral decomposition transform to the transform coefficient block to achieve the reconstructed residual sample values for the block at a fourth precision greater than the first precision; achieving reconstructed image samples of the block by summation of the predicted image samples and the reconstructed residual sample values at an increased precision equal to or greater than at least one of the third and fourth precisions and reducing a result of the summation having the increased precision down to the second precision; and inserting the transform coefficient block into a data stream.

[0012] According to another embodiment, a method for reconstructing a block of a picture by intra prediction may have the steps of: determining reconstructed values of neighboring image samples of the picture, neighboring the block from a data stream at a first fixed point precision; extracting an intra-prediction parameter from the data stream; and determining a prediction value for a predetermined image sample of the block from the reconstructed values of the neighboring image samples by performing an interpolation between the reconstructed values of the neighboring image samples at an intersection between a line crossing the predetermined image

sample and extending in a predetermined direction selected from a set of possible directions in dependence of the intra-prediction parameter and a line along which the reconstructed neighboring image samples serially extend, with, for a subset of the possible directions, provisionally performing the interpolation at a second fixed point precision increased relative to the first fixed point precision by an amount depending on the predetermined direction and then rounding the prediction value to the first precision.

[0013] Another embodiment may have a computer readable digital storage medium having stored thereon a computer program having a program code for performing, when running on a computer, a method for intra predicting a block to be predicted of a picture from neighboring image samples sequentially extending along two rays, starting at a common intersection point and pointing into a different direction, the neighboring image samples having edge neighboring samples bordering the block to be predicted, which method may have the steps of: one-dimensionally filtering the neighboring image samples sequentially arranged into a sequence by anti-parallelly traveling along a first one of the two rays and parallelly traveling along a second one of the two rays to achieve a filtered image sample sequence; and determining a prediction value for a predetermined image sample of the block to be predicted by using the filtered image sample sequence.

[0014] Another embodiment may have a computer readable digital storage medium having stored thereon a computer program having a program code for performing, when running on a computer, a method for reconstructing a block of a picture defined in a first precision by prediction, which method may have the steps of: reconstructing a reference image sample from a data stream at a second precision being equal to or greater than the first precision; extracting a transform coefficient block for the block from the data stream; determining predicted image samples for the block from the reconstructed reference image samples at a third precision higher than the second precision; applying an inverse spectral decomposition transform to the transform coefficient block to achieve reconstructed residual sample values for the block at a fourth precision greater than the first precision; and reconstructing the block by summation of the predicted image samples and the reconstructed residual sample values at an increased precision equal to or greater than at least one of the third and fourth precisions and reducing a result of the summation having the increased precision down to the second precision.

[0015] Another embodiment may have a computer readable digital storage medium having stored thereon a computer program having a program code for performing, when running on a computer, a method for encoding a block of a picture defined in a first precision, which method may have the steps of reconstructing reference image samples at a second precision being equal or greater than the first precision; determining predicted image samples for the block from the reconstructed reference image samples at a third precision higher than the second precision; comparing the predicted image samples and original image samples of the block of the picture defined in the first precision to determine residual sample values for the block; applying a spectral decomposition transform to the achieved residual sample values and using a quantization to achieve a transform coefficient block; applying an inverse spectral decomposition transform to the transform coefficient block to achieve the reconstructed residual sample values for the block at a fourth precision greater than the first precision; achieving reconstructed image samples of the block by summation of the predicted image samples and the reconstructed residual sample values at an increased precision equal to or greater than at least one of the third and fourth precisions and reducing a result of the summation having the increased precision down to the second precision; and inserting the transform coefficient block into a data stream.

[0016] Another embodiment may have a computer readable digital storage medium having stored thereon a computer program having a program code for performing, when running on a computer, a method for reconstructing a block of a picture by intra prediction, which method may have the steps of: determining reconstructed values of neighboring image samples of the picture, neighboring the block from a data stream at a first fixed point precision; extracting an intra-prediction parameter from the data stream; and determining a prediction value for a predetermined image sample of the block from the reconstructed values of the neighboring image samples by performing an interpolation between the reconstructed values of the neighboring image samples at an intersection between a line crossing the predetermined image sample and extending in a predetermined direction selected from a set of possible directions in dependence of the intra-prediction parameter and a line along which the reconstructed neighboring image samples serially extend, with, for a subset of the possible directions, provisionally performing the interpolation at a second fixed point precision increased relative to the first fixed point precision by an amount depending on the predetermined direction and then rounding the prediction value to the first precision.

[0017] Embodiments according to a first aspect of the present invention provide an apparatus for intra predicting a block to be predicted of a picture from neighboring image samples. The image samples extend sequentially along two rays starting from a common intersection point and pointing into different directions, the neighboring image samples comprise edge neighboring samples, which border the block to be predicted. The apparatus comprises a smoothing filter and a determiner. The smoothing filter is configured to one-dimensionally filter the neighboring image samples sequentially arranged into a sequence by anti-parallelly traveling along a first one of the two rays and travelling antiparallely along a second one of the two rays, to obtain a filtered image sample sequence. The determiner is configured to determine the prediction value for a predetermined image sample of the block to be predicted by using the filtered image sample sequence.

[0018] It is an idea of embodiments according to the first aspect of the present invention, that a compression efficiency in video coding can be improved if a smoothing filter is used for filtering reference image samples (the neighboring image samples). It has been found, that an influence of outliers within the reference image sample can be reduced by using the smoothing filter. An advantage of embodiments according to the first aspect of the present invention, is therefore that by using the smoothing filter, outliers within the reference image samples do not negatively effect an intra prediction result. A resulting residual signal can therefore be reduced and represented with less bits than without the smoothing filter. Furthermore, by one-dimensionally filtering the reference image samples, a computational overhead is kept reasonable.

[0019] Embodiments according to a second aspect of the present invention provide an apparatus for reconstructing a

block of a picture defined in a first precision by prediction. The apparatus comprises a reconstructor, an extractor, a predictor and an inverse transformer. The reconstructor is configured to reconstruct reference image samples from a data stream at a second precision being equal to or greater than the first precision. The extractor is configured to extract a transform coefficient block for the block of the picture from the data stream. The predictor is configured to determine predicted image samples for the block of the picture from the reconstructed reference image samples at a third precision, which is higher than the second precision. The inverse transformer is configured to apply an inverse spectral decomposition transform to the transform coefficient block to obtain residual sample values for the block at a further precision, which is greater than the first precision. The reconstructor is further configured to reconstruct the block of the picture by summation of the predicted image samples and the residual sample values at an increased precision equal to or greater than at least one of the third and fourth precisions, and reducing a result of the summation having the increased precision down to the second precision.

[0020] A precision may, for example, be a fixed point precision.

[0021] It is an idea of embodiments according to the second aspect of the present invention, that a compression efficiency in video coding can be improved, if a prediction and a reconstruction for a block of a picture to be predicted is performed in a higher precision, then the picture is defined. It has been found that by using a higher precision in the determination of predicted image samples for the block and in the reconstruction of the block, than using a precision in which the picture is defined residual sample values for the block can be reduced and, therefore, represented with less bits in a transmission. An advantage of embodiments according to the second aspect of the present invention is that by predicting and reconstructing in a higher precision than the picture is defined, a more precise prediction and reconstruction can be obtained, leading to a smaller residual information for the block.

[0022] Embodiments according to a third aspect of the present invention provide an apparatus for reconstructing a block of a picture by intra prediction. The apparatus comprises a reconstructor, an extractor and an intra predictor. The reconstructor is configured to determine reconstructed values of neighboring samples of the picture, which neighbor the block from a data stream, at a first fixed point precision. The extractor is configured to extract an intra prediction parameter from the data stream. The intra predictor is configured to determine a prediction value for a predetermined image sample of the block from the reconstructed values of the neighboring image. The intra predictor is configured to determine the prediction value by performing an interpolation between the reconstructed values of the neighboring image samples at an intersection between a line crossing the predetermined image samples and extending in a predetermined direction selected from a set of possible directions in dependence of the intra prediction parameter, and a line along which the reconstructed neighboring image samples serially extend. The intra predictor is further configured to, for a subset of the possible directions, perform the interpolation at a second fixed point precision increased relative to the first fixed point precision by an amount depending on the predetermined direction and then rounding the prediction value to the first prediction.

[0023] It is an idea of embodiments according to the third aspect of the present invention, that a computational load in video coding can be reduced, if an interpolation used to determine a prediction value for an image sample of a block to be predicted by intra prediction is performed at a fixed point precision, depending on a predetermined direction, which is dependent from an intra prediction parameter for the block. It has been found, that by performing an interpolation of each block, which has to be predicted by intra prediction dependent on an intra prediction parameter of the block instead of performing the interpolation for each block the same, a computational load for performing the interpolation can be reduced. An advantage of embodiments according to the third aspect of the present invention is that a computational load for determining an intra prediction of a block of a picture is reduced by performing an interpolation at a precision determined by an intra prediction parameter of the block.

BRIEF DESCRIPTION OF THE DRAWINGS

[0024] Embodiments of the present invention will be detailed subsequently referring to the appended drawings, in which:

[0025] FIG. **1** shows a block diagram of a video encoder according to an embodiment of the present invention;

[0026] FIG. **2** shows a block diagram of a video decoder according to a further embodiment of the present invention;

[0027] FIG. **3** shows a block to be predicted with neighboring reference samples;

[0028] FIG. **4** shows an example, which illustrates how to determine interpolation points;

[0029] FIG. **5** shows a table with different parameters used for intra prediction performed by the video encoder from FIG. **1** and the video decoder from FIG. **2**;

[0030] FIG. **6** shows an example on how to predict an image sample using the table from FIG. **5**;

[0031] FIG. **7** shows a block diagram of an apparatus according to an embodiment according to the first aspect of the present invention;

[0032] FIG. **8** shows an apparatus according to an embodiment according to the second aspect of the present invention;

[0033] FIG. **9** shows a block diagram of an apparatus according to a further embodiment according to the second aspect of the present invention; and

[0034] FIG. **10** shows a block diagram of an apparatus according to the third aspect of the present invention.

DETAILED DESCRIPTION OF THE INVENTION

[0035] Before embodiments of the present invention will be explained in greater detail in the following on the basis of the Figs., it is to be pointed out that the same or functionally equal elements are provided with the same reference numerals in the figures and that a repeated description of these elements shall be omitted. Hence, the description of the elements provided with the same reference numerals is mutually interchangeable and/or applicable in the various embodiments.

[0036] FIG. **1** shows a block diagram of a video encoder **100** according to an embodiment of the present invention. The video encoder **100** comprises a residual information determiner **110**, a transformer **120**, a data stream inserter **130**, an inverse transformer **140**, a reconstructor **150** and a predictor **160**. The predictor **160** comprises a smoothing filter **162** and a determiner **164**.

[0037] As mentioned in the introductory of this application, a block of a picture, may be predicted using intra prediction or inter prediction. In the following, the main focus is lying on intra prediction, but embodiments of the present invention may be also configured to perform in inter prediction. The predictor **160** of the video encoder **100** is configured to determine a prediction **166** for a block **102** which has to be coded of the current picture of a video. The predictor **160** determines the prediction **166** for the block **102** based on reconstructed samples **152**, which have been encoded before the current block. In the case of intra prediction, the reconstructed samples **152** are neighboring samples bordering the block **102** to be coded of the same picture like the block **102**. In the predictor **160** the reconstructed samples **152** are filtered using the smoothing filter **162** to suppress outliers within the reconstructed samples **152**, such that these outliers do not negatively affect (or only insignificantly negatively affect) the prediction **166** for the block **102**. The smoothing filter **162** may, for example, be an FIR filter. The FIR filter may, for example, be a three tap FIR filter. The smoothing filter **162** determines filter reconstructed samples **168** of the reconstructed samples **152**. A precision of the filtered reconstructed sample **168** may be higher than a precision of the reconstructed samples **152**. The filtered reconstructed samples **168** may then be used by the determiner **164** of the predictor **160** to determine the prediction **166** for the block **102**. The determiner **164** may compare original image samples of the block **102** with the filtered reconstructed samples **168** (which are bordering the block **102**, and therefore neighboring edge image samples of the block **102**) and determine an intra prediction parameter **169**, which may define a prediction direction out of a set of possible prediction directions. A value of an image sample of the block **102** may be a value of one of the filtered reconstructed samples **168** or an interpolation of multiple values of the filtered reconstructed samples **168**. Image samples of the block **102**, lying on a common prediction line (pointing to the defined prediction direction) may have equal values. The determiner **164** determines then by combining the intra prediction parameter **169** with the filtered reconstructed samples **168**, the prediction **166** for the block **102**. A precision of the prediction **166** may be increased compared to the precision of the filtered reconstructed samples **168**. This concept of intra predicting is explained in this application later on in more detail by using the FIGS. **3** to **6**.

[0038] The residual information determiner **110** is configured to compare the prediction **166** for the block **102** with the (original) block **102** to determine a residual information **112** for the block **102**. The residual information **112** determines the difference of the (original) block **102** and its prediction **166**. As described before by using the smoothing filter **162** to filter the reconstructed samples **152** and by having an increased precision of the prediction **166** compared to the reconstructed samples **152** the residual information **112** can be kept smaller, than without using the smoothing filter **162** and with using the same precision of the prediction **166** compared to the reconstructed samples **152**. The residual information **112** can, therefore, be represented by fewer bits. The transformer **120** may transform the residual information **112** and quantize the resulting transform coefficients to obtain a transform coefficient block **122**. A quality loss (if any) in the video encoder **100** occurs in the quantization of the transform coefficients. The transform coefficient block **122** may then together with the intra prediction parameter **169** be inserted into a data stream **132** by the data stream inserter **130**. The data stream **132** may be transmitted to a video decoder in which the block **102** may be reconstructed. The transform coefficient block **122** comprising the quantized transform coefficients representing the residual information **112** may be inverse transformed by the inverse transformer **140** to obtain reconstructed residual information **142** for the block **102**. The reconstructed residual information **142** may show a loss compared to the residual information **112** because of the quantization of the transform coefficients in the transformer **120**. The reconstructed residual information **142** are also available in a video decoder decoding the data stream **132**. The reconstructed residual information **142** may be used by the reconstructor **150** in conjunction with the prediction **166** for the block **102** to obtain reconstructed samples **152** of the block **102**, which then may be used as reference samples for a following block, which has to be predicted.

[0039] The video encoder **100** may further be configured to perform inter prediction. The predictor **160** may therefore, for example, be configured to determine if the block **102** should be interpredicted or intrapredicted. If the predictor **160** decides that the block **102** has to be interpredicted, the reconstructed samples **152** used to determine the prediction **166** of the block would be samples of previously encoded pictures. Furthermore, the predictor **160** would be configured to obtain an inter prediction parameter (for example a motion information for the block **102**), which then would be inserted into the data stream **132** by the data stream inserter **130**.

[0040] FIG. **2** shows a video decoder **200** according to a further embodiment of the present invention. The video decoder **200** comprises an extractor **210**, an inverse transformer **140**, a reconstructor **150** and a predictor **160'**. The video decoder **200** may be configured to decode the block **102**, which may have been encoded with the video encoder **100** according to FIG. **1**. The same reference numerals used in FIG. **2** like in FIG. **1**, determine equal or similar elements in the video decoder **200** as in the video encoder **100**. The extractor **210** is configured to extract the transform coefficient block **122** for the block **102** and the intra prediction parameter **169** for the block **102** from the data stream **132** (which, for example, is provided by the video encoder **100**). The inverse transformer **140** obtains (like the inverse transformer **140** of the video encoder **100**) the reconstructed residual information **142** for the block **102**. The predictor **160'** is configured to determine the prediction **166** for the block **102** by using the reconstructed samples **152** (which, for example, are previously decoded neighboring image samples, neighboring the block **102**). The reconstructed samples **152** are filtered by using a smoothing filter **162** of the predictor **160'** to obtain the filtered reconstructed samples **168**. A determiner **164'** of the predictor **160'** may then obtain the prediction **166** for the block **102** based on the intra prediction parameter **169** for the block **102** and the filtered reconstructed samples **168**. The determiner **164'** may determine the prediction **166** for the block **102** on the same way like the determiner **164** of the video encoder **100**. The determiner **164'** may therefore be a reduced version of the determiner **164** of the video encoder **100**. The determiner **164** of the video encoder **100** is, as mentioned before, further configured to obtain the intra prediction parameter **169** for the block **102**.

[0041] The prediction **166** for the block **102** may then together with the reconstructed residual information **142** for the block **102** be combined by the reconstructor **150** to obtain a reconstructed version of the block **102** or reconstructed

samples of the block **102**. This reconstructed samples of the block **102**, may be used again as reference samples for following blocks, which have to be decoded. Furthermore, the reconstructed samples of the block may be sent to a video output device, like a display. A precision of the reconstructed samples **152** obtained by the reconstructor **150** may be higher than the precision in which the block **102** is defined and, therefore, a rounding of the reconstructed samples **152** may be applied before sending the reconstructed samples **152** to the output device. Furthermore, as mentioned before, a precision of the filtered reconstructed samples **168** may be higher as the precision of the reconstructed samples **152** and a precision of the prediction **166** may be higher than a precision of the filtered reconstructed samples **168**. A precision of the reconstructed residual information **142** may be higher than the precision in which the block **102** is defined.

[0042] Like the video encoder **100**, the video decoder **200** may also be configured to perform inter prediction. The video encoder **100** may configured be to signal, within the data stream **132** if the block **102** is interpredicted or intrapredicted. The extractor **210** may extract this information out of the data stream **132** and the predictor **160'** may depending on this information perform intra prediction or inter prediction to obtain the prediction **166** for the block **102**.

[0043] The extractor **210** may be further configured to extract an inter prediction parameter for the block **102** (for example a motion information), which then may be used by the determiner **164'** to obtain the prediction **166** for the block **102**. The reconstructed samples **152**, which are used in the predictor **160'** to obtain the prediction **166** for the block **102** may in the inter prediction case be reconstructed samples of previously decoded pictures.

[0044] In the following, a concept for directional inter prediction with increased precision for arbitrary size blocks of images of video data, which may be employed in the video encoder **100** and in the video decoder **200** is explained in more detail by using the FIGS. **3** to **6**. As mentioned before, as reference sample for the intra prediction scheme already coded and reconstructed samples **152** of the same picture are used. FIG. **3** shows a block O of size n×m to be predicted together with its neighboring reconstructed samples **152**. The original block O to be predicted consists of the n×m array of samples:

$$O = \begin{bmatrix} o_{0,0} & \cdots & o_{0,m-1} \\ \vdots & \ddots & \vdots \\ o_{n-1,0} & \cdots & o_{n-1,m-1} \end{bmatrix}.$$

[0045] The block O corresponds to block **102** which has been used in the description of the video encoder **100** and the video decoder **200**.

[0046] A block P of samples that forms the prediction of the original block O is denoted as an n×m array:

$$P = \begin{bmatrix} p_{0,0} & \cdots & p_{0,m-1} \\ \vdots & \ddots & \vdots \\ p_{n-1,0} & \cdots & p_{n-1,m-1} \end{bmatrix}.$$

[0047] The block P corresponds to the prediction **166** which has been used in the description of the video encoder **100** and the video decoder **200**.

[0048] The reconstructed sample values **152** of preceding blocks (in encoding and decoding order) relative to the current block O will be used as reference samples **152** for the prediction block P.

[0049] The preceding blocks are blocks of the same picture like the current block O. FIG. **3** shows the reconstructed sample values **152** that are potentially available for referencing. In particular, these are the left neighboring reconstructed sample values consisting of the vector $l=[l_0 \ldots l_{n-1} \ldots]^T$, the top neighboring reconstructed sample values consisting of the vector $t=[t_0 \ldots t_{m-1} \ldots]^T$, and the top-left neighboring reconstructed sample value a.

[0050] For the derivation process of the elements (of the image samples) $p_{x,y}$ of the prediction array P (the prediction block P), all samples are assumed to be sample values that recite on a square grid with constant distance d between horizontally and vertically neighboring samples. Furthermore, two rays are defined that both start at the grid point of the neighboring value a. The first ray is denoted as a top reference ray **310** and it crosses all grid points of the top neighbors (vector t), the second ray is denoted as a left reference ray **320** and it crosses all grid points of the left neighbors (vector l). The elements of the vectors t and I together with the value a define a new reference vector $q=[\ldots l_{n-1} \ldots l_0\ a\ t_0 \ldots t_{m-1} \ldots]^T$ where neighboring values on the square grid are also neighboring elements in q. This reference vector q forms the reconstructed samples **152**, used for determining the prediction **166** of the block **102** which have been used in the description of the video encoder **100** and the video decoder **200**. In other words, the reconstructed samples **152** are neighboring samples, which are sequentially arranged into a sequence (the reference vector q). The first element of the new reference vector q is the last element of the vector l and the last element of the reference vector q is the last element of the vector t or vice versa.

[0051] For deriving the prediction **166** for the block **102**, three or four parameters may be chosen. The first parameter is the number of bits k by which the bit depth (of the reconstructed samples **152**) is increased for calculating the prediction **166** for the block **102**. The second parameter is a rational valued slope r for determining the dominant prediction direction and the third parameter is an interpolation filter. The slope r may also be equal to plus infinity in which case it is assumed that its related prediction direction line is parallel to the left reference ray **320**. The slope r may also be equal to zero in which case it is assumed that its related prediction direction line is parallel to the top reference ray **310**. If the slope r is positive, a fourth (binary) parameter needs to be specified, which determines from which of the two reference rays the prediction **166** for the block **102** is to be predicted, which will be described in more detail later.

[0052] According to some embodiments, given the neighboring reconstructed reference sample values **152** as elements of the vector q, a new reference vector **4** is formed by multiplying each element (each image sample) of q with 2^k or equivalently, by shifting left each element of q by k bits to get an increased bit-depth representation of the reference samples (of the reconstructed samples **152**).

[0053] As it can be seen from FIG. **3**, elements of the vector l and elements of the vector t may be not available, for obtaining the prediction **166** for the block **102**, because these elements may not have been coded yet. For example, the elements t_n, and t_{m+1} of the vector t may not be available and/or the elements l_n and l_{n+1} of the vector l may not be available.

Therefore, elements of $\hat{q}$ that stem from preceding blocks that are coded (encoded or decoded) before block **102** are marked as available. All other elements of $\hat{q}$ are marked as not available (for example the elements t_m, t_{m+1} and/or l_n, l_{m+1}). Additionally, rules may be defined to change the marking for certain elements of $\hat{q}$ from available to not available. This can be beneficial in order to limit the complexity of deriving $\hat{q}$ or to improve the error resilience. Elements of $\hat{q}$ that are marked as not available are interpolated or extrapolated based on values in $\hat{q}$ that are marked as available. Such that for every element of $\hat{q}$ exists a value.

[0054] For each point of the top reference ray **310** and the left reference ray **320** an interpolated value (which may be between grid points of the elements of the vectors l and t) can be calculated by applying a chosen interpolation filter to $\hat{q}$. For calculating an individual value $p_{x,y}$ of the prediction array P, a prediction line **410** (which is shown in FIG. **4**) with the slope r is drawn through the grid point of the corresponding original sample $o_{x,y}$ (in the example in FIG. **4** through $o_{n-1,2}$). If the slope r is negative, the corresponding prediction line **410** crosses only one of both reference rays (or goes through the point a). In this case, the value of $p_{x,y}$ is the interpolated value at the crossing point of the corresponding reference ray (the left reference ray **320** or the top reference ray **310**) and the prediction line **410** crosses. If the slope r is positive (like in the example shown in FIG. **4**), the prediction line **410** crosses both reference rays (the left reference ray **320** and the top reference ray **310**). In this case, as mentioned before, a further binary parameter needs to be specified that decides whether to use the left reference ray **320** or the top reference ray **310** for prediction, i.e. for the prediction of the value $p_{x,y}$. Then, the value of $p_{x,y}$ is the interpolated value at the crossing point of the prediction line **410** with the specified reference ray. The crossing point may lie between grid points of the vector t or vector l. This crossing point has therefore be interpolated (by using values of the elements of the vector l and/or the vector t). In the specific case where the slope r equals to infinity, the corresponding prediction line **410** is parallel to the left reference ray **320**. In the specific case where the slope r equals to zero, the corresponding prediction line **410** is parallel to the top reference ray **310**. The prediction line **410** crosses in these two specific cases the left reference ray **320** or the top reference ray **310** in grid points of elements of the vector l or of elements of the vector t. The corresponding prediction value $p_{x,y}$ may therefore be a value of the corresponding element of the vector l or of the vector t or an interpolated version thereof.

[0055] Since a rational valued slope r is used, only a small number of interpolation positions (l_{i1} and l_{i2} in the example shown in FIG. **4**) between two neighboring horizontal or vertical values (of the vector l or the vector t, for example, the values l_n and l_{n+1} in the example shown in FIG. **4**) have to be calculated. These interpolated values (for example l_{i1}, l_{i2}) need to be calculated only once, which reduces the complexity of the approach. The number of interpolation points between two horizontally or vertically neighboring points on the dot raster grid equals the number of possible lines of the slope r that cross an imaginary line segment between these two horizontally or vertically neighboring points and that cross other points (grid points of elements of the original block O) of the dot raster grid. In FIG. **4** an example of this is shown, wherein two lines (the prediction line **410** and a second prediction line **411**) of slope r cross two vertically neighboring points (l_{n+1}, l_n) of the left reference ray **320**. The first prediction direction line **410** crosses the point l_{n+1} and the second prediction direction line **411** crosses the point l_n of the left reference ray **320**. The points l_n and l_{n+1} equal dot raster points of the corresponding elements l_n and l_{n+1} of the vector l. From the irreducible form of slope r with r_n being the nominator and r_d being the denominator, a right triangle **420** can be constructed, such that its hypotenuse **422** lies on the lower line **410** and a vertical cathetus **424** of length r_n and a horizontal cathetus **426** of length are r_d exists. Since r_n and r_d are natural numbers, a cathetus that starts on a dot raster point also ends on a dot raster point. For example, the vertical cathetus **424** starts at the dot raster point, which equals a dot raster point of an element $o_{n-1,5}$ of the original block O and ends at a dot raster point, which equals a dot raster point of an element $o_{n-3,5}$ of the original block O. The horizontal cathetus **426** starts at the dot raster point being equal to the dot raster point of the element $o_{n-1,5}$ and ends at a dot raster point equal to a dot raster point of the element $o_{n-1,2}$ of the original block O. Therefore, in the example shown in FIG. **4**, r_n equals 2 and r_d equals 3 and the slope r of the first prediction direction line **410** and the second prediction direction line **411**, which is parallel to the first prediction direction line **410** equals ⅔. From this follows that when the hypotenuse **422** starts on a dot raster point (in the example shown in FIG. **4** the point $o_{n-1,2}$) of the dot raster grid, it also ends on a point (in the example shown in FIG. **4**, the point $o_{n-3,5}$) of the dot raster grid. Thus, a line of slope r that crosses one point of the dot raster grid, needs to cross points of the dot raster grid in steps of the length of the hypotenuse (in the example shown in FIG. **4** the first prediction direction line **410** crosses the point $o_{n-1,2}$ and the point $o_{n-3,5}$). Therefore, all interpolation points can be found by parallel shifting the hypotenuse from the lower prediction direction line **410** to the upper prediction direction line **411**. In FIG. **4** parallel shifted versions of the first prediction line **410** are shown with dashed lines. A first parallel shifted prediction direction line **412** crosses, for example, a dot raster point which is equal to a dot raster point of an element $o_{n-2,3}$ of the original block O. This first parallel shifted prediction direction line **412** crosses the left reference ray **320** in a first interpolated point l_n between the two neighboring points l_n and l_{n+1}. A second parallel shifted prediction direction line **413** crosses a dot raster point, which equals a dot raster point of an element $o_{n-1,1}$ of the original block O and crosses the left reference ray **320** in a second interpolation point l_{i2} between the two neighboring points l_n and l_{n+1}. The dot raster points lying on the line, which coincides with the parallel-shifted hypotenuse are those grid points for which one and the same crossing point value on the reference ray (on the left reference ray **320**) needs to be interpolated. For example, for the points $o_{n-1,2}$ and $o_{n-3,5}$ the point l_{n+1} would have to be interpolated. This means that a value of a prediction $p_{n-1,2}$ and of a prediction $p_{n-3,5}$ would be equal to an interpolated value of the point l_n. An interpolation value for the point l_n may, for example, be determined by adding a quarter of the value of the element l_n of the reference vector q or the new reference vector $\hat{q}$, and a half of a value of the element $l_{n+}1$ of the reference vector q or the new reference vector $\hat{q}$, and a quarter of a value of an element l_{n+2} of the reference vector q or the new reference vector $\hat{q}$.

[0056] In case, where the directional prediction modes are not suitable it may be important to have a fallback prediction mode. For this purpose, a so-called DC prediction mode provides a constant prediction value $p_{x,y}$ given as the average (DC or expected value) of all elements of $\hat{q}$ that are marked as

available and subsequent rounding of this average values to the nearest integer value in the increased bit-depth domain. For the DC prediction modes no additional parameters need to be specified.

[0057] In the following, an example is shown, for an efficient signaling of the prediction mode for the block **102**. According to some embodiments of the present invention, the parameter k is a fixed value, or signaled only once per frame (for example of a picture) or sequence. An efficient signaling for the remaining prediction parameter through each block of a picture is according to some embodiments of the present invention achieved by using nine sets of parameters (modes). They consist of eight directional prediction modes and the DC fallback mode. FIG. **5** shows a table with the nine possible parameter sets (modes) that may be used to predict a given block (the block **102**). To signal a chosen intra prediction mode for a given block, only its mode index needs to be signaled (for example as the intra prediction parameter **169**). This may be done in two steps. First, a so-called most probable mode may be derived depending on the modes of already coded neighboring blocks. The most probable mode may, for example, be the mode, which has been used for deriving predictions for the most of the neighboring blocks. Then, one flag is signaled, which has the value of one (or binary "TRUE") if the mode for the current block equals the most probable mode and a value of zero (or binary "FALSE") otherwise. This flag may be called most-probable-ipred-mode-flag. For encoding and decoding this flags, one of three probability models (one of three contexts, for example, in an entropy decoder) are used, depending on the corresponding values of the same flag for the left and top neighboring block. If this flag has a value of one, signaling of the mode for the current block is finished. A prediction for the current block is, therefore, carried out using the most probable mode. If the flag has the value zero, an index called intra-pred-mode is derived that equals to the mode index if the mode index for the prediction of the current block is smaller than the mode index of the most probable mode and mode index −1, otherwise. Thus, the value intra-pred-mode is in the interval (0 . . . 7) and its binary representation fits into three bits. These three bits may be written from LSB to MSB and a separate probability model for each bit may be used.

[0058] The table shown in FIG. **5** shows the nine different indexes, which may be used for predicting a current block **102** the first column displays the mode index for the used prediction mode (for the used prediction direction). The mode index, may, as mentioned before, be transmitted as an intra prediction parameter **169** within the data stream **132** from the video encoder **100** to the video decoder **200** and may be extracted by the extractor **210** of the video decoder **200**.

[0059] The second column shows a name, which corresponds to a direction of the prediction for each prediction mode.

[0060] The third column determines the type of each prediction mode.

[0061] The fourth column determines a slope r of a prediction direction line corresponding to each mode index. As mentioned before, a prediction direction line with a slope infinity may be parallel to the left reference ray **320** (mode index 0) and a prediction direction line with a slope zero may be parallel to the top reference ray **310** (mode index 1). For the DC fallback mode (mode index 2) no prediction direction line exists.

[0062] The fifth column specifies an interpolation filter for each mode index, wherein FP designate full pel resolution and HP designates half pel resolution. As can be seen from the table, for the mode indices 0, 1, 3, 4 only full pel resolutions are available. This means, a prediction direction line corresponding to one of these mode indices, which crosses a dot raster point of an element of the block B also crosses a dot raster point of the top reference ray **310** or the left reference ray **320**. Therefore, in these cases no intermediate positions between neighboring dot raster points of the left reference ray **310** and top reference ray **320** need to be calculated. In the case of the mode indices 0 and 1, no interpolation at all has to be performed, because the element of the block **102** would obtain the value of the corresponding element of the reference vector $\hat{q}$

[0063] In the case of the mode indices 3 and 4 an interpolated value may be obtained by summing a half of the value of the element of the reference vector $\hat{q}$ through the grid point of which the prediction line crosses and a quarter of each of the two neighboring elements in the reference vector $\hat{q}$ of the element, through the grid point of which the prediction line crosses. In the case of the mode indices 5, 6, 7 and 8 half pel positions are also possible. This means, the prediction direction line crossing a grid point of an element of the block **102** may cross the top reference ray **310** or the left reference ray **320** between two neighboring grid points of the top reference ray **310** or the left reference ray **320**. Therefore a value of this intermediate element may be calculated. The value of this intermediate element may be obtained by summing a half of a value of an element corresponding to the grid point before the interpolation element and a half of a value of an element corresponding to the grid point behind the intermediate element.

[0064] The fifth column defines from which reference ray of the two reference rays a prediction has to be done. This is only useful in the case, where the slope is greater than zero, as mentioned before, in this case a prediction direction line crosses the left reference ray **320** and the top reference ray **310**.

[0065] FIG. **6** shows an example for the possible modes of predicting a value for an element $o_{2,2}$ of the original block B. For each prediction direction line its mode name is shown next to the prediction direction line and its corresponding mode index is shown in brackets next to the prediction direction line. It can be seen that prediction direction lines with a slope a>0 cross the top reference ray **310** and the left reference ray **320**. This applies for the mode indices 3, 7 and 8. The value for the element $o_{2,2}$ would be obtained in the mode indices 4 and 7 by interpolated values from the top reference ray **310** and in the case of the mode index 8 by an interpolated value from the left reference ray **320**. As an example for a half pel position, an intermediate point l_{i1} has to be calculated between the grid point l_0 and l_1 which corresponds to grid points of the elements l_0 and l_1 of the new reference vector $\hat{q}$.

[0066] As described before for the video encoder **100** and the video decoder **200**, the reconstructed samples **152** may be filtered with a smoothing filter **162** to obtain filtered reconstructed sample **168**. In other words, a further filtering step can be applied to the new reference vector $\hat{q}$, before calculating the prediction P. According to some embodiments, this further (smooth) filtering may be applied adaptive, that means for each block, an encoder may decide whether to apply this additional filtering step or not. This decision may be signaled as a so-called most_probable_ipred_mode_flag. This flag

may be encoded and decoded after the intra_pred_mode syntax element and may use one separate probability model. A specific smoothing filter that may be applied to q (or to the reconstructed samples **152**, and higher precision version of the reconstructed sample **152**) is given by the array of filter taps (¼, ½, ¼). Therefore, the smoothing filter **162** may, for example, be an FIR filter and in this special case a 3-tap FIR filter.

[0067] An alternative method for increasing the bit depth of the prediction is to modify the interpolation filters (used for the prediction) and the smoothing filter **162** (instead of computing the new reference vector $\hat{q}$ out of q). In this way, it may be possible to obtain a prediction **166** that has an increased bit depth without the need for additional computation steps. All filter coefficients of a particular interpolation or smoothing filter **162** are multiplied with a power of 2 which corresponds to a binary left shift. Frequently, filters are used whose coefficients consist of fractions that all have the same power of 2 as denominator. The filtering operation for filters of this type can be carried out by multiplying the samples (the reconstructed samples **152** or the reference vector q) with the numerators of the filter coefficients only, and then applying a binary right-shift to the sum of the product. When filtering like this, the final right-shift (in the filters) can be merged with a left-shift (the left-shift by k) that may be used for increasing the bit-depth. According to some embodiments, this can even lead to not shifting at all, which corresponds to a reduction of the complexity. The bit-depth of a particular prediction block depends on the bit-depth increase that is incorporated into the smoothing filter **162** and interpolation filters that are used. This can lead to a prediction **166** of different bit depths for differing blocks of the picture, which needs to be considered in the residual reconstruction process (in the reconstructor **150**). If, for example, a block is predicted, using mode index 0 or 1 from the above mentioned example, no interpolation is necessary and therefore a bit depth increase is not necessary, either. In other words, a bit depth increase, may depend on the used mode index, and therefore on the intra prediction parameter **169**, which may determine a prediction direction out of a set of possible prediction directions. These differing bit depths are considered in the residual reconstruction process by deriving the reconstructed residual signals (the reconstructed residual information **142**) with an increased bit depth such that it matches the bit depth of the corresponding prediction signal **166**. Then, prediction and residual signal are added (in the reconstructor **150**), followed by a step that reduces the intermediate bit depth to the bit depth of the original signal. In other words, a precision of the reconstructed residual information **142** and of the prediction **166** may be higher than a precision, at which the block **102** is coded.

[0068] Depending on the type of residual processing used, a higher bit-depth representation may be intrinsically available (without increasing computational complexity much), for instance integer implementations of a DCT like inverse transform (in the inverse transformer **140**) usually use a binary right shift as final step to complete the computation of a particular residual sample value (of the reconstructed residual information **142**). This means, for this final step, a higher bit depth is intrinsically available which can be used. The inverse transformer **140**, may therefore omit this final step of rounding and the higher bit-depth version of the reconstructed residual information **142** may be used in the reconstructor **150** to obtain the reconstructed samples **152**.

[0069] An advantage of carrying out the prediction and residual reconstruction step (in the reconstructor **150**) in a higher bit-depth is that a rounding only occurs once. Therefore, in embodiments of the present invention, a computational load is decreased, compared to systems in which a rounding of the prediction and a rounding of the residual information occurs before the reconstruction step. Furthermore, a higher bit-depth prediction **166** and a higher bit-depth reconstruction residual information **142** may lead to higher precise reconstructed samples **152** of the block **102**, and therefore to a smaller needed residual information, as in systems, wherein a rounding of prediction samples and of reconstructed residual samples occurs before the prediction and residual reconstruction process. Furthermore, the prediction process as described here tends to produce smooth predictions. This is also true for DCT-like inverse transform (in the inverse transformer **142**) in the residual reconstruction step, especially when a strong quantization of the transform coefficients (in the transformer **120**) is involved. By adding a smooth prediction to a smooth residual in a higher bit-depth contouring artifacts may be avoided (or at least significantly reduced). Embodiments of the present invention, enable therefore, a higher quality of the reconstructed samples **152** than, in where a bit-depth of the prediction and the reconstructed residual information is the same, like the bit-depth, in which the block **102** and reconstructed samples **152** are defined.

[0070] According to some embodiments of the present invention, any interpolation filters and smoothing filters of a video encoder or a video decoder comprise filtering coefficients, which are multiple of ¼. In this case, each filter coefficient of this filters may be multiplied with four, which turns each coefficient into an integer and increases the bit-depth by two bits for each filtering operation. Furthermore, when the block-adaptive smoothing is not used (for example if the smooth_ref_samples_flag is false), a modified version of the utilized interpolation filter may be used, with each filter coefficient multiplied by 4 once more to achieve a bit-depth increase by 4 bit, when this filter is used. In this way, it is insured that after the interpolation step, the bit-depth of the prediction **166** is increased by 4 bits, regardless whether the smoothing filter **162** was used or not. Furthermore, for both, the smoothing filter **162** and the interpolation filter, a final bit-shift may not be necessary, since all filter coefficients are integers. With this concept, it is possible to calculate a prediction **166** of a bit-depth increased by 4 bit only, while avoiding rounding operations for any combination of smoothing and interpolation filters with filter coefficients that are multiples of ¼ (see table 5, wherein all filter coefficients of the interpolation filter are multiples of ¼). According to further embodiments of the present invention, the smoothing filter **162** and the interpolation filter may have arbitrary filtering coefficients. According to these embodiments, each filter coefficient of the smoothing filter **162** and interpolation filters is multiplied by 4, which increases the bit-depth by 2 for each filtering operation. Furthermore, when block-adaptive smoothing filtering is not used (for example, if the smooth_ref_samples_flag is zero), a modified version of the utilized interpolation filter is used, with each coefficient multiplied by 4 once more to achieve a bit-depth increase by 4 bit, when this filter is used. In this way, it is insured that after the interpolation step, the bit-depth of the prediction **166** is increased by 4 bits, regardless whether the smoothing filter **162** was used or not. With this method, it is possible to

calculate a prediction **166** with a bit-depth increased by 4 bit for any combination of smoothing filter **162** and interpolation filters with arbitrary filter coefficients.

[0071] According to further embodiments of the present invention, a predictor **160** may also be configured to increase the bit-depth of the prediction **166** depending on the block **102** to be coded. This increase in bit-depth may, for example, be signaled in the data stream **132**, for example, within the intra prediction parameter **169**.

[0072] In the following, more generalized descriptions for the aspects of the present invention, which have been described above using the precise example will be given.

[0073] FIG. **7** shows a block diagram of an apparatus **700** according to an embodiment according to the first aspect of the present invention. The apparatus **700** for intra predicting a block **102** to be predicted of a picture from neighboring image samples **152**, sequentially extending along two rays (the top reference ray **310** and the left reference ray **320**) starting at a common intersection point (a) and pointing into different directions, the neighboring image samples **152** comprising edge neighboring samples bordering the block **102** to be predicted, comprises a smoothing filter **162** and a determiner **164**. The smoothing filter **162** is configured to one-dimensionally filter the neighboring image samples **152**, which are sequentially arranged into a sequence (the reference vector q or the new reference vector $\hat{q}$) by anti-parallelly traveling along a first one (for example along the left reference ray **320**) of the two rays and parallelly traveling along a second one (for example, along the top reference ray **310**) of the two rays, to obtain a filtered image sample sequence **168**. The apparatus **700** further comprises a determiner **164** configured to determine a prediction value ($p_{x,y}$) for a predetermined image sample ($o_{x,y}$) of the block **102** to be predicted by using the filtered image sample sequence **168**. The apparatus **700** may be employed in the hybrid video decoder **100** and in the hybrid video decoder **200**. As it can be seen from the reference numerals, the neighboring image samples **152** may correspond to the reconstructed samples **152** of the video encoder **100** and the video decoder **200**. The smoothing filter **162** is configured to filter these neighboring image samples **152** to obtain the filtered image sample sequence **168**, which corresponds to the filtered reconstructed samples **168** in the video encoder **100** and the video decoder **200**. The determiner **164** of the apparatus **700** may be the determiner **164** of the video encoder **100** or the determiner **164'** of the video decoder **200**. The determiner **164** obtains, based on the filtered image sample sequence **168** a prediction **166** for the block **102**. In other words, the determiner obtains a prediction value for a predetermined image sample of the block **102**. The determiner **164** determines therefore a prediction value for every image sample of the block **102**, which then forms the prediction **166** or the block P, like it has been called above, too. An advantage of using a smoothing filter to filter the neighboring image samples **152** or the reconstructed samples **152** is that outliers within the neighboring image samples **152** do not negatively affect the intra prediction result (the prediction **166**). The computational overhead may be kept reasonable.

[0074] As mentioned before, a bit-depth representation of the filtered image sample sequence **168** may be higher than a bit-depth representation of the neighboring image samples **152**. In other words, a precision of the filtered image sample sequence **168** may be higher than a precision of the neighboring image samples **152**. A precision of the prediction **166** may be even higher than the precision of the filtered image sample sequence **168**.

[0075] According some embodiment of the present invention, the determiner **164** may be configured to determine a prediction value $p_{x,y}$ for the block **102** to be predicted by interpolating the filtered image sample sequence **168** at an intersection between a line (prediction direction line) crossing a predetermined image sample $o_{x,y}$ in a predetermined direction associated with the block **102** to be predicted, and the first (for example, the top reference ray **310** and/or the second ray (for example, the left reference ray **320**).

[0076] As mentioned before, during interpolating the filtered image sample sequence **168** (in the determiner **164**) the precision of the filtered image sample sequence **168** may be increased, such that the precision of the prediction **166** (of the prediction value $p_{x,y}$) is higher than the precision of the filtered image sample sequence **168**.

[0077] According to some embodiments of the present invention, the apparatus **700** may be configured to selectively deactivate the smoothing filter **162**, dependent on a filter information (for example, within the intra prediction parameter **169**) for the block. The determiner **164** may be further configured to selectively determine the prediction value $p_{x,y}$ for the predetermined image sample $o_{x,y}$ of the block **102** by using the filtered image sample sequence **168** or by using the neighboring image samples **152**, dependent on the filter information for the block. In the encoder **100** this filter information may be determined by the determiner **164**, and included in the intra prediction parameter **169**. In the video decoder **200** the determiner **164'** may decide, based on the filter information within the intra prediction parameter **169** if the reconstructed samples **152** have to be filtered using the smoothing filter **162** before determining the prediction **166**. In other words, embodiments of the present invention may be configured to make a decision, if the smoothing filter **162** should be applied to the reconstructed samples **152** or not.

[0078] According to some embodiments of the present invention, the smoothing filter **162** may be an FIR filter. The FIR filter may for example be a 3-tap FIR filter.

[0079] According to further embodiments of the present invention, the coefficients of the smoothing filter **162** may be a multiple of ¼.

[0080] According to further embodiments of the present invention, the smoothing filter is determined by an array of filter taps proportional to: (¼, ½, ¼).

[0081] An advantage of using a one-dimensionally smoothing filter, instead of using a two-dimensional smoothing filter is a reduced complexity. Referring to the above-mentioned example, the smoothing filter would be applied starting from the last value of the vector l and ending in the last value of the vector t. Therefore, the smoothing filter is traveling along the reference image samples **152**, bordering the block **102** to be predicted. Hence, the smoothing filter is travelling in a first direction (a vertical direction) along the elements of the vector l and in a second direction (a horizontal direction) along elements of the vector t. The smoothing filter **162** changes the direction at the element a of the reference vector q or the new reference vector $\hat{q}$.

[0082] FIG. **8** shows a block diagram of an apparatus **800** according to an embodiment according to the second aspect of the present invention. The apparatus **800** for encoding a picture, which is defined in a first precision comprises a reconstructor **850**, a predictor **860**, a residual sample value

determiner **810**, a transformer **820**, an inverse transformer **840** and a data stream inserter **830**.

[0083] The reconstructor **850** is configured to reconstruct reference image samples at a second precision being equal to or greater than the first precision in which the block **102** to be coded is defined. The predictor **860** is configured to determine predicted image samples **166** for the block **102** from the reconstructed reference image samples **152** at a third precision, which is higher than the second precision. The residual sample value determiner **810** is configured to compare said predicted image samples **166** and original image samples of the block **102** of the picture defined in the first precision to determine residual sample values **112** for the block **102**. The transformer **820** is configured to apply a spectral decomposition transform (for example a discrete cosine transform) to the obtained residual sample values **112** and to use a quantization to obtain a transform coefficient block **122**. The inverse transformer **840** is configured to apply an inverse spectral decomposition transform (for example, an inverse discrete cosine transform) to the transform coefficient block **122** to obtain reconstructed residual sample values **142** for the block **102** at a fourth precision, which is greater than the first precision. The reconstructor **850** is further configured to obtain reconstructed image samples for the block **102** by summation of the predicted image samples **166** and the reconstructed residual image samples **142** at an increased precision equal to or greater than the at least one of the third and fourth precisions, and reducing a result of the summation having the increased precision down to the second precision. The data stream inserter **830** is configured to insert the transform coefficient block **122** into a data stream **132**.

[0084] The apparatus **800** may, for example, be the video encoder **100** according to FIG. **1**, without the smoothing filter **162**. The reconstructor **850** of the apparatus **800** corresponds to the reconstructor **150** of the video encoder **100**, the predictor **860** corresponds to the predictor **160** of the video encoder **100** (with the difference, that the predictor **860** of the apparatus **800** does not necessarily need to have the smoothing filter **162**). The residual value determiner **810** corresponds to the residual information determiner **110** of the video encoder **100**. The transformer **820**, the inverse transformer **840** and the data stream inserter **830** correspond each to its equivalent in the video encoder **100**. As explained above, the block **102** to be decoded may be defined in a first precision. A precision may also be called a bit-depth representation, wherein a higher precision corresponds to a higher bit-depth representation. A bit-depth representation of a value may be increased by left-shifting the value with a predetermined number of bits. A left-shift corresponds to a multiplication with 2.

[0085] As explained before, an increase in the precision of the reconstructed reference image samples **152** may be obtained by left-shifting each value of these reconstructed reference image samples **152** as it has been explained with the reference vector q to obtain the new reference vector $\hat{q}$. The predictor **860** may use reconstructed reference image samples **152** with a second precision to determine predicted image samples in the third precision forming the prediction **166** (or the block P for the block **102**). The increase in precision from the reconstructed reference image samples **152** in the second precision to the predicted image samples or to the prediction **166** in the third precision may be employed by omitting a binary right-shift determined by filter coefficients of an interpolation filter used in the predictor **860**, as it has been described before. An increase of the precision of the reconstructed residual sample value to the inverse transformer **840** may be employed by omitting a binary right-shift, for example, used in an inverse discrete cosine transformation. The increased precision prediction **166** may then in the reconstructor **850** together with increased precision reconstructed residual sample values **142** combined in the reconstructor **850** to determine reconstructed image samples of the block **102** at an increased precision, which afterwards is rounded down to the second precision. These reconstructed image samples of the block **102** may then be used as reconstructed reference image samples **152** for blocks following (in encoding or decoding order) the block **102**. As mentioned before, by using an increased precision prediction **166** and an increased precision reconstructed residual information **142** a better reconstructed version of the block may be obtained, than in the case, wherein a prediction with the same precision like the block **102** is defined is used and a residual information with the same prediction like the block **102** is used. Therefore a resulting reconstructed residual information **142** for the block **102** may in embodiments of the present invention be smaller and may therefore be represented by less bit in the data stream **132**.

[0086] The predictor **860** may be further configured to obtain the predicted image samples (the prediction **166**) by using the block **102** to be coded together with the reconstructed reference image samples **152**. Furthermore, the predictor **860** may be configured to determine the prediction parameter **169**, which may be inserted from the data stream inserter **130** into the data stream **132**.

[0087] According to some embodiments of the present invention, the apparatus **800** may be configured to reconstruct the block **102** using intra prediction or inter-prediction. In the intra prediction case, the reconstructed reference image samples **152** may contain neighboring image samples, bordering image samples of the block **102**. The prediction parameter **169** may for example be an intra prediction parameter, determining a prediction direction, from a set of possible prediction directions, for example like the index mode explained according to FIG. **5**. In the inter-prediction case the reconstructed reference image samples **152** may be reconstructed reference image samples from previously encoded pictures. The prediction parameter **169** may for example contain motion information and reference index numbers, determining an inter-motion-prediction for the block **102**.

[0088] FIG. **9** shows an apparatus **900** according to a further embodiment according to the second aspect of the present invention. The apparatus **900** for reconstructing a block **102** of a picture defined in a first precision by prediction comprises a reconstructor **950**, an extractor **910**, a predictor **960** and an inverse transformer **940**. The reconstructor **950** is configured to reconstruct reference image samples from a data stream **132** at a second precision being equal to or greater than the first precision, in which the block **102** is defined, to obtain reconstructed reference image samples **152** in the second precision. The extractor **910** is configured to extract a transform coefficient block **122** for the block **102** from the data stream **132**. The predictor **960** is configured to determine predicted image samples **166** for the block **102** or a prediction **166** for the block **102** from the reconstructed reference image samples **152** at a third precision, which is higher than the second precision. The inverse transformer **940** is configured to apply an inverse spectral decomposition transform (for example an inverse discrete cosine transform) to the transform coefficient block **122** to obtain reconstructed residual

sample values **142** for the block **102** at a fourth precision greater than the first precision. The reconstructor **950** is further configured to reconstruct the block **102** by summation of the predicted image samples **166** and the reconstructed residual sample values **142** at an increased precision equal to or greater than at least one of the third and fourth precision, and reducing the result of the summation having the increased precision down to the second precision. The result of the summation may be reconstructed image samples of the block **102**, which may be used as reconstructed reference image samples **152** for (for in decoding order) following blocks, which have to be decoded.

[0089] The apparatus **900** may correspond to the video decoder **200** according to FIG. **2**, with the difference, that the predictor **960** does not necessarily need to comprise a smoothing filter **162**. The increase in the precision from the reconstructed reference image samples **152** in the second precision to the predicted image samples **166** in the third precision may, as in the apparatus **800**, be employed by bit-shifting the reconstructed reference image samples **152** before determining the predicted image samples **166** within the predictor **960** or by bit-shifting filter coefficients, which may be used in the predictor **960** for interpolating the reconstructed reference image samples **152** to obtain the predicted image samples **166**. The precision increase of the reconstructed residual sample values to the fourth precision within the inverse transformer **940** may be performed as described with the video encoder **800** according to FIG. **8**, by omitting a bit-shift in the inverse discrete cosine transformation, which may be employed in the inverse transformer **940**. The reconstructed reference image samples may be rounded down to the first precision, and then be provided to a display output device, like a display. According to some embodiments, the extractor **910** may be configured to extract a prediction parameter **169** out of the data stream **132**. The predictor **160** may be configured to determine the predicted image samples **166** for the block **102** by using the prediction parameter **169** for the block **102** and the reconstructed reference image samples **152**.

[0090] According to some embodiments of the present invention, the reconstructor **950** may be configured such that the reconstructed reference image samples **152** are neighboring image samples, the neighboring image samples comprising edge neighboring samples bordering the block **102** or image samples of the block **102** to be reconstructed. In other words, the apparatus **900** may be configured to perform an intra prediction.

[0091] According to further embodiments of the present invention, the apparatus **900** may also be configured to perform inter-prediction, in this case, the reconstructed reference samples **152** may be image samples of previously decoded pictures, and the prediction parameter **169** may, for example, be a motion information or in general an inter-prediction parameter.

[0092] According to some embodiments, as mentioned before, the predictor **960** may be configured such that the prediction values for the predicted image samples **166** for the block **102** are determined by interpolating the reconstructed reference image samples **152**. The predictor **960** may be configured to increase the precision of the reconstructed reference image samples **152** before interpolating. As an example, which has been described above, the new reference vector $\hat{q}$, which is used for the interpolation is obtained by increasing the precision (binary left-shifting) the reference vector q.

[0093] According to some further embodiments, the predictor **960** may be configured to interpolate the reconstructed reference image samples **152** by using an FIR filter (like the above-mentioned interpolation filter), wherein coefficients of the FIR filter are adapted such that denominators of the coefficients are equal, and wherein the third precision of the predicted image samples is dependent on the denominators of the coefficients. In the above-mentioned examples, filter coefficients of the FIR filters may all be a multiple of ¼, in which the precision of the reconstructed reference image samples **152** is increased by only multiplying with numerators of the coefficients of the FIR filter and by omitting the division (binary right shift) with the denominators (which are 4 for all coefficients) which may be equal to a multiplication with 4 or a binary left-shift by 2.

[0094] In the above-mentioned examples, therefore, the third precision is by a number of bits equal to log 2 of the denominator of the coefficients of the FIR filter higher than the second precision.

[0095] As mentioned before, the reconstructor **950** may be configured to provide the reconstructed block of the picture to a display output device, for this the apparatus **900** may further comprise a reproduction output, which is configured to provide the reconstructed block of the picture in the first precision.

[0096] FIG. **10** shows a block diagram of an apparatus **1000** according to the third aspect of the present invention. The apparatus **1000** for reconstructing a block **102** of a picture by intra prediction comprises a reconstructor **1050**, an extractor **1020** and an intra predictor **1010**. the reconstructor **1050** is configured to determine reconstructed values **152** of neighboring image samples of the picture, neighboring the block **102** from a data stream **132**, in a first fixed point precision. The extractor **1020** is configured to extract an inter-prediction parameter **169** from the data stream **132**. The intra predictor **1010** is configured to determine a prediction value $p_{x,y}$ for a pre-determined image sample $o_{x,y}$ of the block **102** from the reconstructed values **152** of the neighboring image samples by performing an interpolation between the reconstructed values **152** of the neighboring image samples at an intersection between a line (a prediction direction line) crossing the predetermined image sample $o_{x,y}$ and extending in a predetermined direction selected from a set of possible directions in dependence of the intra prediction parameter **169**, and a line (for example, the top reference ray **310** or the left reference ray **320**) along which the reconstructed neighboring image samples **152** serially extend, with, for a subset of that possible directions, provisionally performing the interpolation at a second fixed point precision increased relative to the first fixed point precision by an amount k, depending on the predetermined direction and then rounding the prediction value to the first fixed point precision.

[0097] The apparatus **1000** corresponds to the video decoder **200**. The reconstructor **1050** of the apparatus **1000** corresponds to the reconstructor **150** of the video decoder **200**, with the difference that the reconstructor **1050** may be configured to obtain the reconstructed residual information **142** for the block **102** from the data stream **132**. The extractor **1020** corresponds to the extractor **210** of the video decoder **200**. The intra predictor **1010** corresponds to the predictor

160' of the video decoder **200**. The intra predictor **1010** differs from the predictor **160'** in that it does not necessarily need a smoothing filter **162**.

[0098] Although the video decoder **200** according to FIG. **2** may be suited for use in applications using intra prediction and inter-prediction, the apparatus **1000** may be used for performing intra predictions only. Therefore the reconstructed samples **152** of the video decoder **200** correspond to the reconstructed values **152** of neighboring image samples (bordering the block **102**) of the apparatus **1000**. The prediction parameter **169** of the video decoder **200** corresponds to the intra prediction parameter **169** of the apparatus **1000**. The prediction value $p_{x,y}$, determined by the intra predictor **1010** corresponds to the prediction **166** for the block **102** in the video decoder **200**, because the prediction **166** for the block **102** comprises a plurality of prediction values $p_{x,y}$ which form the prediction **116**.

[0099] As it has been seen from the table according to FIG. **5**, for different prediction directions, a different increase in precision of the reconstructed reference values or the reconstructed values **152** of neighboring image samples may be useful, because of different interpolation filters, which may be applied to the reconstructed values **152** of neighboring image samples. Therefore, embodiments according to the third aspect of the present invention may increase the bit-depth of the reconstructed values **152** of neighboring image samples based on the prediction direction for the block **102**. Referring to the above-described example, the table of FIG. **5** may further comprise a sixth column, which determines by which factor k a precision of the reconstructed values **152** of neighboring image samples have to be increased. This may lead to a reduction in computational load, especially in cases, in which no bit-depth increase is needed (for example, in the cases of index mode 0, 1 and 2).

[0100] According to some embodiments of the present invention, the intra predictor **1010** may be configured such that the interpolation is performed using an FIR filter (the above described interpolation filter) wherein a filter tap number of the FIR filter is dependent on the predetermined direction and on a position of the predetermined sample $o_{x,y}$ within the block **102**. In other words, as can be seen from FIG. **5**, an interpolation filter may be dependent on the prediction direction (the index mode) and on the position of the predetermined sample $o_{x,y}$, for example, if a half pel position needs to be interpolated or a full pel position needs to be interpolated.

[0101] Furthermore, the intra predictor **1010** may be configured such that the precision of the coefficients of the FIR filter is increased to the second precision before interpolating.

[0102] This been shown, in the case, in where coefficients of the FIR filter are multiplied with a value (in the above-mentioned example with the value **4**) before the interpolation is applied to the reconstructed values **152** of the neighboring image samples.

[0103] According to further embodiments, the intra predictor **1010** may be configured such that the precision of the reconstructed values **152** of the neighboring image samples is increased to the second fixed point precision before performing the interpolation. This has been explained, in the above-mentioned examples by obtaining the new reference vector $\hat{q}$ from the reference vector q by left-shifting the values of the reference vector q (by left-shifting the reconstructed values **152** of the neighboring image samples).

[0104] Although some aspects have been described in the context of an apparatus, it is clear that these aspects also represent a description of the corresponding method, where a block or device corresponds to a method step or a feature of a method step. Analogously, aspects described in the context of a method step also represent a description of a corresponding block or item or feature of a corresponding apparatus. Some or all of the method steps may be executed by (or using) a hardware apparatus, like for example, a microprocessor, a programmable computer or an electronic circuit. In some embodiments, some one or more of the most important method steps may be executed by such an apparatus.

[0105] Depending on certain implementation requirements, embodiments of the invention can be implemented in hardware or in software. The implementation can be performed using a digital storage medium, for example a floppy disk, a DVD, a Blue-Ray, a CD, a ROM, a PROM, an EPROM, an EEPROM or a FLASH memory, having electronically readable control signals stored thereon, which cooperate (or are capable of cooperating) with a programmable computer system such that the respective method is performed. Therefore, the digital storage medium may be computer readable.

[0106] Some embodiments according to the invention comprise a data carrier having electronically readable control signals, which are capable of cooperating with a programmable computer system, such that one of the methods described herein is performed.

[0107] Generally, embodiments of the present invention can be implemented as a computer program product with a program code, the program code being operative for performing one of the methods when the computer program product runs on a computer. The program code may for example be stored on a machine readable carrier.

[0108] Other embodiments comprise the computer program for performing one of the methods described herein, stored on a machine readable carrier.

[0109] In other words, an embodiment of the inventive method is, therefore, a computer program having a program code for performing one of the methods described herein, when the computer program runs on a computer.

[0110] A further embodiment of the inventive methods is, therefore, a data carrier (or a digital storage medium, or a computer-readable medium) comprising, recorded thereon, the computer program for performing one of the methods described herein.

[0111] A further embodiment of the inventive method is, therefore, a data stream or a sequence of signals representing the computer program for performing one of the methods described herein. The data stream or the sequence of signals may for example be configured to be transferred via a data communication connection, for example via the Internet.

[0112] A further embodiment comprises a processing means, for example a computer, or a programmable logic device, configured to or adapted to perform one of the methods described herein.

[0113] A further embodiment comprises a computer having installed thereon the computer program for performing one of the methods described herein.

[0114] In some embodiments, a programmable logic device (for example a field programmable gate array) may be used to perform some or all of the functionalities of the methods described herein. In some embodiments, a field programmable gate array may cooperate with a microprocessor

in order to perform one of the methods described herein. Generally, the methods are advantageously performed by any hardware apparatus.

[0115] While this invention has been described in terms of several embodiments, there are alterations, permutations, and equivalents which fall within the scope of this invention. It should also be noted that there are many alternative ways of implementing the methods and compositions of the present invention. It is therefore intended that the following appended claims be interpreted as including all such alterations, permutations and equivalents as fall within the true spirit and scope of the present invention.

1. An apparatus for intra predicting a block to be predicted of a picture from neighboring image samples sequentially extending along two rays starting at a common intersection point and pointing into different directions, the neighboring image samples comprising edge neighboring samples bordering the block to be predicted, comprising:

a smoothing filter configured to one-dimensionally filter the neighboring image samples sequentially arranged into a sequence by anti-parallelly traveling along a first one of the two rays and parallelly traveling along a second one of the two rays to achieve a filtered image sample sequence; and

a determiner configured to determine a prediction value for a predetermined image sample of the block to be predicted by using the filtered image sample sequence.

2. The apparatus according to claim **1**,

wherein the determiner is configured to determine the prediction value for the block to be predicted by interpolating the filtered image sample sequence at an intersection between a line crossing the predetermined image sample in a predetermined direction associated with the block to be predicted and the first ray and/or the second ray.

3. The apparatus according to claim **1**,

wherein the apparatus is configured to selectively deactivate the smoothing filter dependent on a filter information for the block from a data stream; and

wherein the determiner is further configured to selectively determine the prediction value for the predetermined image sample of the block by using the filtered image sample sequence or by using the neighboring image samples dependent on the filter information for the block.

4. The apparatus according to claim **1**,

wherein the smoothing filter is an FIR filter.

5. The apparatus according to claim **4**,

wherein the smoothing filter is configured such that filter tap coefficients of the smoothing filter are a multiple of ¼.

6. The apparatus according to claim **5**,

wherein the smoothing filter is determined by an array of filter taps proportional to:

(¼, ½, ¼).

7. The apparatus according to claim **1**,

wherein the smoothing filter is configured such that a precision of the filtered image sample sequence is higher than a precision of the neighboring image samples.

8. An apparatus for reconstructing a block of a picture defined in a first precision by prediction, comprising:

a reconstructor configured to reconstruct reference image samples from a data stream at a second precision being equal to or greater than the first precision to achieve reconstructed reference image samples;

an extractor configured to extract a transform coefficient block from the data stream;

a predictor configured to determine predicted image samples for the block from the reconstructed reference image samples at a third precision higher than the second precision;

an inverse transformer configured to apply an inverse spectral decomposition transform to the transform coefficient block to achieve reconstructed residual sample values for the block at a fourth precision greater than the first precision; and

wherein the reconstructor is further configured to reconstruct the block by summation of the predicted image samples and the reconstructed residual sample values at an increased precision equal to or greater than at least one of the third and fourth precisions and reducing a result of the summation comprising the increased precision down to the second precision.

9. The apparatus according to claim **8**,

wherein the reconstructor is further configured such that the reconstructed reference image samples are neighboring image samples, the neighboring image samples comprising edge-neighboring samples bordering the block to be reconstructed.

10. The apparatus according to claim **8**,

wherein the predictor is further configured such that prediction values for the predicted image samples for the block are determined by interpolating the reconstructed reference image samples.

11. The apparatus according to claim **10**,

wherein the predictor is further configured to increase the precision of the reconstructed reference image samples before interpolating.

12. The apparatus according to claim **10**,

wherein the predictor is further configured to interpolate the reconstructed reference image samples by using an FIR filter; and

wherein coefficients of the FIR filter are adapted such that denominators of the coefficients are equal and wherein the third precision of the predicted image samples is dependent on the denominators of the coefficients.

13. The apparatus according to claim **12**,

wherein the predictor is further configured such that the third precision is by, a number of bits, equal to log 2 of the denominators of the coefficients higher than the second precision.

14. The apparatus according to claim **8**,

further comprising a reproduction output, the reproduction output configured to provide a reconstruction of the block of the picture in the first precision.

15. An apparatus for encoding a block of a picture defined in a first precision, comprising:

a reconstructor configured to reconstruct reference image samples at a second precision being equal to or greater than the first precision to achieve reconstructed reference image samples;

a predictor configured to determine predicted image samples for the block from the reconstructed reference image samples at a third precision higher than the second precision;

a residual sample value determiner configured to compare the predicted image samples and original image samples of the block of the picture defined in the first precision to determine residual sample values for the block;

a transformer configured to apply a spectral decomposition transform to the achieved residual sample values and use a quantization to achieve a transform coefficient block;

an inverse transformer configured to apply an inverse spectral decomposition transform to the transform coefficient block to achieve reconstructed residual sample values for the block at a fourth precision greater than the first precision;

wherein the reconstructor is further configured to achieve reconstructed image samples of the block by summation of the predicted image samples and the reconstructed residual sample values at an increased precision equal to or greater than at least one of the third and fourth precisions and reducing a result of the summation comprising the increased precision down to the second precision; and

a data stream inserter configured to insert the transform coefficient block into a data stream.

16. An apparatus for reconstructing a block of a picture by intra prediction, comprising:

a reconstructor configured to determine reconstructed values of neighboring image samples of the picture, neighboring the block from a data stream, at a first fixed point precision;

an extractor configured to extract an intra-prediction parameter from the data stream; and

an intra predictor configured to determine a prediction value for a predetermined image sample of the block from the reconstructed values of the neighboring image samples by performing an interpolation between the reconstructed values of the neighboring image samples at an intersection between a line crossing the predetermined image sample and extending in a predetermined direction selected from a set of possible directions in dependence of the intra-prediction parameter and a line along which the reconstructed neighboring image samples serially extend, with, for a subset of the possible directions, provisionally performing the interpolation at a second fixed point precision increased relative to the first fixed point precision by an amount depending on the predetermined direction and then rounding the prediction value to the first prediction.

17. The apparatus according to claim **16**,

wherein the intra predictor is further configured such that the interpolation is performed using an FIR filter, wherein a filter tap number of the FIR filter is dependent on the predetermined direction and on a position of the predetermined image sample within the block.

18. The apparatus according to claim **17**,

wherein the intra predictor is configured such that a precision of coefficients of the FIR filter is increased to the second precision before interpolating.

19. The apparatus according to claim **16**,

wherein the intra predictor is configured such that the precision of the reconstructed values of the neighboring image samples is increased to the second fixed point precision before performing the interpolation.

20. A method for intra predicting a block to be predicted of a picture from neighboring image samples sequentially extending along two rays, starting at a common intersection point and pointing into a different direction, the neighboring image samples comprising edge neighboring samples bordering the block to be predicted, comprising:

one-dimensionally filtering the neighboring image samples sequentially arranged into a sequence by anti-parallelly traveling along a first one of the two rays and parallelly traveling along a second one of the two rays to achieve a filtered image sample sequence; and

determining a prediction value for a predetermined image sample of the block to be predicted by using the filtered image sample sequence.

21. A method for reconstructing a block of a picture defined in a first precision by prediction, comprising:

reconstructing a reference image sample from a data stream at a second precision being equal to or greater than the first precision;

extracting a transform coefficient block for the block from the data stream;

determining predicted image samples for the block from the reconstructed reference image samples at a third precision higher than the second precision;

applying an inverse spectral decomposition transform to the transform coefficient block to achieve reconstructed residual sample values for the block at a fourth precision greater than the first precision; and

reconstructing the block by summation of the predicted image samples and the reconstructed residual sample values at an increased precision equal to or greater than at least one of the third and fourth precisions and reducing a result of the summation comprising the increased precision down to the second precision.

22. A method for encoding a block of a picture defined in a first precision, comprising:

reconstructing reference image samples at a second precision being equal or greater than the first precision;

determining predicted image samples for the block from the reconstructed reference image samples at a third precision higher than the second precision;

comparing the predicted image samples and original image samples of the block of the picture defined in the first precision to determine residual sample values for the block;

applying a spectral decomposition transform to the achieved residual sample values and using a quantization to achieve a transform coefficient block;

applying an inverse spectral decomposition transform to the transform coefficient block to achieve the reconstructed residual sample values for the block at a fourth precision greater than the first precision;

achieving reconstructed image samples of the block by summation of the predicted image samples and the reconstructed residual sample values at an increased precision equal to or greater than at least one of the third and fourth precisions and reducing a result of the summation comprising the increased precision down to the second precision; and

inserting the transform coefficient block into a data stream.

23. A method for reconstructing a block of a picture by intra prediction, comprising:

determining reconstructed values of neighboring image samples of the picture, neighboring the block from a data stream at a first fixed point precision;

extracting an intra-prediction parameter from the data stream; and

determining a prediction value for a predetermined image sample of the block from the reconstructed values of the neighboring image samples by performing an interpola-

tion between the reconstructed values of the neighboring image samples at an intersection between a line crossing the predetermined image sample and extending in a predetermined direction selected from a set of possible directions in dependence of the intra-prediction parameter and a line along which the reconstructed neighboring image samples serially extend, with, for a subset of the possible directions, provisionally performing the interpolation at a second fixed point precision increased relative to the first fixed point precision by an amount depending on the predetermined direction and then rounding the prediction value to the first precision.

24. A computer readable digital storage medium having stored thereon a computer program comprising a program code for performing, when running on a computer, a method for intra predicting a block to be predicted of a picture from neighboring image samples sequentially extending along two rays, starting at a common intersection point and pointing into a different direction, the neighboring image samples comprising edge neighboring samples bordering the block to be predicted, said method comprising:

one-dimensionally filtering the neighboring image samples sequentially arranged into a sequence by antiparallelly traveling along a first one of the two rays and parallelly traveling along a second one of the two rays to achieve a filtered image sample sequence; and

determining a prediction value for a predetermined image sample of the block to be predicted by using the filtered image sample sequence.

25. A computer readable digital storage medium having stored thereon a computer program comprising a program code for performing, when running on a computer, a method for reconstructing a block of a picture defined in a first precision by prediction, said method comprising:

reconstructing a reference image sample from a data stream at a second precision being equal to or greater than the first precision;

extracting a transform coefficient block for the block from the data stream;

determining predicted image samples for the block from the reconstructed reference image samples at a third precision higher than the second precision;

applying an inverse spectral decomposition transform to the transform coefficient block to achieve reconstructed residual sample values for the block at a fourth precision greater than the first precision; and

reconstructing the block by summation of the predicted image samples and the reconstructed residual sample values at an increased precision equal to or greater than at least one of the third and fourth precisions and reducing a result of the summation comprising the increased precision down to the second precision.

26. A computer readable digital storage medium having stored thereon a computer program comprising a program code for performing, when running on a computer, a method for encoding a block of a picture defined in a first precision, said method comprising:

reconstructing reference image samples at a second precision being equal or greater than the first precision;

determining predicted image samples for the block from the reconstructed reference image samples at a third precision higher than the second precision;

comparing the predicted image samples and original image samples of the block of the picture defined in the first precision to determine residual sample values for the block;

applying a spectral decomposition transform to the achieved residual sample values and using a quantization to achieve a transform coefficient block;

applying an inverse spectral decomposition transform to the transform coefficient block to achieve the reconstructed residual sample values for the block at a fourth precision greater than the first precision;

achieving reconstructed image samples of the block by summation of the predicted image samples and the reconstructed residual sample values at an increased precision equal to or greater than at least one of the third and fourth precisions and reducing a result of the summation comprising the increased precision down to the second precision; and

inserting the transform coefficient block into a data stream.

27. A computer readable digital storage medium having stored thereon a computer program comprising a program code for performing, when running on a computer, a method for reconstructing a block of a picture by intra prediction, said method comprising:

determining reconstructed values of neighboring image samples of the picture, neighboring the block from a data stream at a first fixed point precision;

extracting an intra-prediction parameter from the data stream; and

determining a prediction value for a predetermined image sample of the block from the reconstructed values of the neighboring image samples by performing an interpolation between the reconstructed values of the neighboring image samples at an intersection between a line crossing the predetermined image sample and extending in a predetermined direction selected from a set of possible directions in dependence of the intra-prediction parameter and a line along which the reconstructed neighboring image samples serially extend, with, for a subset of the possible directions, provisionally performing the interpolation at a second fixed point precision increased relative to the first fixed point precision by an amount depending on the predetermined direction and then rounding the prediction value to the first precision.

* * * * *