(12) Official Gazette of Unexamined Patent Applications (A)

(19) Japanese Patent Office (JP)

(11) Patent Application Disclosure No.: **2003-276472**
(P2003-276472A)
(43) Disclosure Date: **September 30, 2003**

(51) Int. Cl.[7]	Domestic Classification Symbol	F1	Theme Code (Reference)	
B60K 31/00		B60K 31/00	Z	3D044
F02D 29/02	301	F02D 29/02	301C	3G093
	311		311B	5H180
//G08G 1/00		G08G 1/00	J	

Examination Request: Not Yet Requested Number of Claims: 6 OL (Total of 12 pages)

(21) Application Number.: Patent Application 2002-86197 (P2002-86197)
(22) Filing Date: March 26, 2002

(71) Applicant 000003609
Toyota Central R&D Labs., Inc.
41-1 Yokomichi, Nagakute, Aichi-gun, Aichi-ken
(72) Inventor Takeo Hongo
c/o Toyota Central R&D Labs., Inc.; 41-1 Yokomichi, Nagakute, Aichi-gun, Aichi-ken
(72) Inventor Shinichi Kojima
c/o Toyota Central R&D Labs., Inc.; 41-1 Yokomichi, Nagakute, Aichi-gun, Aichi-ken
(74) Agent 100087723
Patent Attorney Osamu Fujitani

Continued to the last page

(54) [Title of the Invention] Target vehicle speed determination device

(57) [Abstract]

[Problem] To automatically output a suitable target vehicle speed according to weather, sunlight conditions, and the like.

[Solution Means] The trace mode is a dedicated mode for constructing a driving history DB 10 consisting of driving history data. The road environment parameter Y is derived based on the road environment real-time information X. In the playback mode, the block number BKN and road environment parameter Y are specified from the current position coordinate r and the road environment real-time information X, and using the driving history search means 130, driving history data to which these keys (BKN, Y) match are searched from a driving history DB 10. If both keys match, the average value u of the vehicle speed raw data can be used as is as the target vehicle speed V0. Furthermore, as a means to eliminate the trade-off between maintaining the hit rate for the road environment parameter Y and segmenting the definition of the road environment parameter Y, the suitability estimation process based on the road environment real-time information X by the suitability value estimation means 150 is effective.

TESLA 1060
Tesla, Inc. v. iQAR Inc.
IPR2024-00630

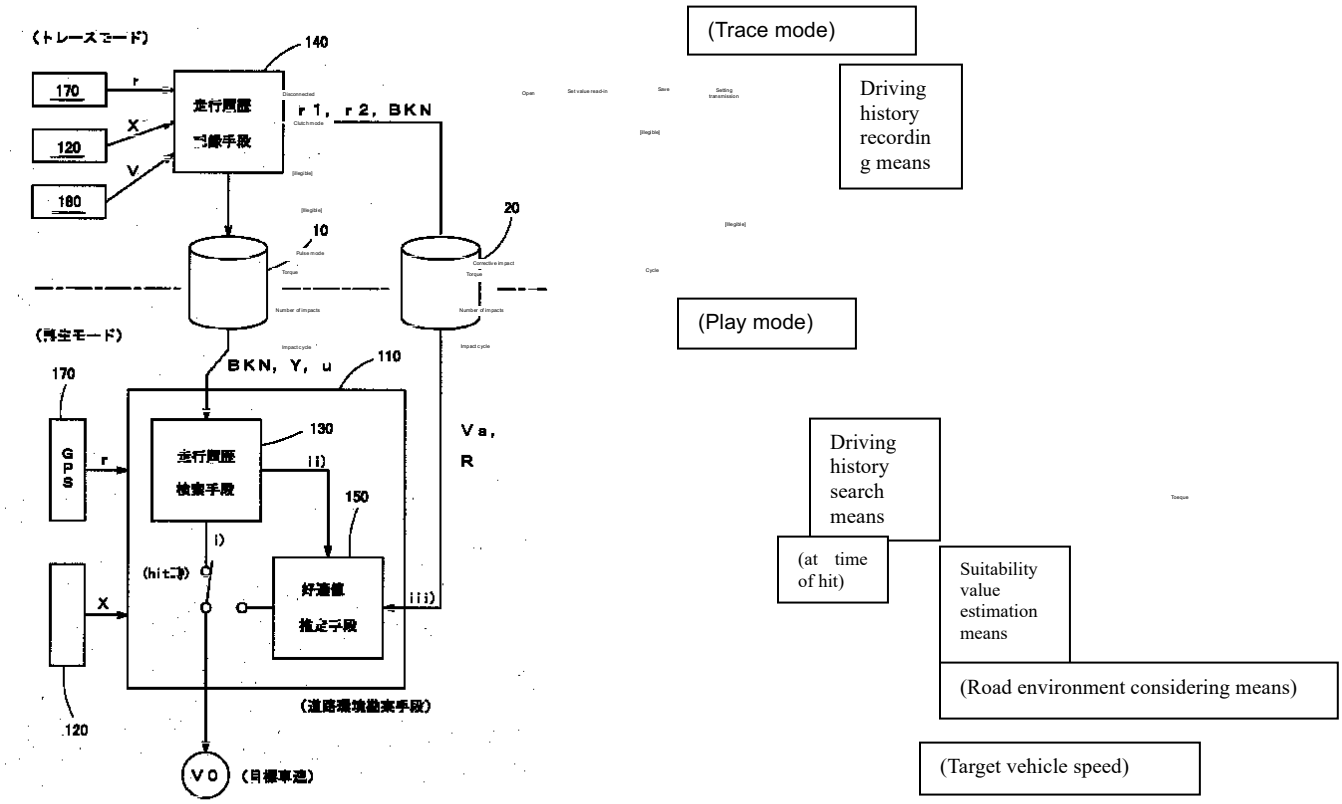

[Claims]

[Claim 1]
An in-vehicle target vehicle speed determining device that determines a target speed of a vehicle based on the current position of the vehicle while it is driving, having an environmental information acquiring means that acquires real-time road environment information related to weather and sunlight conditions that can change naturally over time, and a road environment considering means for determining a target speed of the vehicle based on the current position and the real-time road environment information.
[Claim 2]
The target vehicle speed determining device according to claim 1, wherein the environmental information acquiring means is a means of acquiring, as the road environment real-time information, a wiper operation signal, raindrop detection signal, an outside temperature signal, a road surface temperature signal, headlight activation signal, an optical sensor output signal, a current date and time signal, an ABS operation signal, a wheel rotation speed signal, an on-vehicle camera signal or a wireless device reception signal.
[Claim 3]
The target vehicle speed determining device according to claim 1 or claim 2, having a driving history search means for searching for corresponding data where the current position of the vehicle currently driving and the road environment real-time information approximately match from the driving history data in which the position of the vehicle while driving, the road environment real-time information, and the vehicle speed V are recorded in association with each other; wherein the road environment considering means determines a target speed of the vehicle currently driving based on the vehicle speed V recorded in the relevant data searched by the driving history search means.
[Claim 4]
The target vehicle speed determining device according to any one of claims 1 to 3, having a driving history recording means for creating driving history data by correlating and recording the current road environment real-time information, position, and vehicle speed V of the vehicle.
[Claim 5]
The target vehicle speed determining device according to any one of claims 1 to 4, wherein the road environment considering means has a preferred value estimating means for theoretically or deterministically estimating a preferred value of the target speed of the vehicle based on the real-time road environment information.
[Claim 6]
The target vehicle speed determining device according to claim 5, wherein the preferred value estimating means has a deceleration factor analysis means for calculating a deceleration coefficient α that depends on the detected or estimated road surface condition or a deceleration coefficient β that depends on the detected or estimated visibility condition, and a deceleration factor reflecting means for calculating the preferred value based on the deceleration coefficient α or the deceleration coefficient β.
[0001]
[Technical Field of the Invention] The present

invention relates to an on-vehicle target vehicle speed determining device that determines a target speed of a moving vehicle based on its current location. Accordingly, the target vehicle speed determining device of the present invention is useful for a vehicle speed control device such as an adaptive cruise control system that automatically controls the speed of a vehicle, or an overspeed warning device.

[0002]

[Prior Art] As prior art related to an in-vehicle target vehicle speed determining device that determines the target speed of a running vehicle based on its current position, for example, what is described in "United States Patent 6161072: AUTOMATIC CRUISE CONTROL" (hereinafter referred to as Known Example 1), and alternatively, the method described in the Japanese unexamined patent application publication H8-290728: Auto cruise control method' (hereinafter referred to as Known Example 2). are widely known.

[0003] FIG. 9 illustrates a system configuration diagram of a conventional target vehicle speed determining device 300 and a well-known general ACC system 200, as represented by the above-mentioned known Known Example 1, for example. The user DB in the figure stores driving history (trace data) from when the user drove in the past. As data constituting this driving history, the driving position r1 of the vehicle and the vehicle speed v1 when passing that point are stored in association with each other, and when the vehicle passes a driving position r that substantially matches the driving position r1 while using the target vehicle speed determining device 300, the driving position r at that time becomes a search key, the vehicle speed v1 when the vehicle passed the position r1 in the past is read out, and that value is output to the adaptive cruise control system (ACC system 200) as the current target vehicle speed V0.

[0004] If the corresponding trace data does not exist (that is, there is no hit) in the target speed determining means (FIG. 9) while performing the above search operation, the legal speed limit Vs at the relevant point while driving is read from the speed limit DB in the figure, and the value is output to the ACC system 200 as the current target vehicle speed V0. Further, for example, in the above-mentioned Known Example 2, even when using the legal speed limit Vs, a method has been disclosed in which a more desirable target vehicle speed V0 is calculated by taking into account the radius of curvature R on a road map, without directly outputting the legal speed limit Vs as the target vehicle speed V0.

[0005]

[Problem to be solved by the invention] Due to the weather and sunlight conditions, which can change naturally over time, the road environment, such as road surface conditions and driver visibility, also changes dynamically. However, in the prior art as described above, no special consideration has been taken from this point of view, and therefore, the following problems may occur with the conventional device.

[0006] (Problem 1) If a constant vehicle speed that is sufficiently safe for all situations is always adopted as the target vehicle speed, on a dry road with a good view during the daytime and clear weather, the target vehicle speed tends to be relatively slow compared to the desired value.

(Problem 2) Therefore, it is desirable to change the target vehicle speed from time to time in response to weather

(sunny/rainy/snow, etc.) and sunshine conditions that can change naturally over time. These changes must be made at any time by manual settings or the like. For this reason, it is not always possible to ensure sufficient convenience when using the ACC system.

[0007] The present invention has been made to solve the above problems; the object thereof is to realize a means for automatically outputting an optimized or optimized target vehicle speed according to weather, sunlight conditions, etc., which can change naturally and over time, in a target vehicle speed determining device.

[0008]

[Means for Solving the Problem, and Effects of the Invention] In order to solve the above problems, the following means are effective. That is, the first means, in an in-vehicle target vehicle speed determining device that determines a target speed of a vehicle based on the current position of the vehicle while it is driving, has an environmental information acquiring means that acquires real-time road environment information related to weather and sunlight conditions that can change naturally over time, and a road environment considering means for determining a target speed of the vehicle based on the current position and the real-time road environment information.

[0009] The target speed of a vehicle to be set in an automatic vehicle speed control system such as an adaptive cruise control system is preferably determined based on the driving performance of each vehicle, ease of steering operation, and the like. Furthermore, the driving performance of a vehicle largely depends on the surface condition (friction coefficient) of the road on which the vehicle is driving, and furthermore, the ease of steering wheel operation greatly depends on the visibility condition (visibility) of the road on which the vehicle is driving. However, if the above-mentioned real-time road environment information is used accurately, it is possible to measure or estimate these road surface conditions and visibility conditions, which are useful for determining the optimal or preferred target vehicle speed, so that based on the measurement results or estimation results, the target speed of the vehicle can be optimized or optimized. Therefore, according to the present invention, it is possible to more easily (automatically) adapt the target vehicle speed to the road environment than before.

[0010] In addition, the second means composes the environmental information acquiring means of the first means from a "means for acquiring a wiper operation signal, raindrop detection signal, an outside temperature signal, a road surface temperature signal, headlight activation signal, an optical sensor output signal, a current date and time signal, an ABS operation signal, a wheel rotation speed signal, an on-vehicle camera signal or a wireless device reception signal, as the real-time road environment information."

[0011] The various signals described above are very useful for observing or estimating weather, sunlight conditions, etc., and road surface conditions and visibility conditions can be determined from at least some of these signals. For example, it is possible to estimate the current amount of precipitation based on the output signals of wipers and raindrop sensing devices, and it is also possible to estimate whether the precipitation is due to rain or snow based on the outside temperature and road surface temperature. In addition, since it is possible to determine whether it is day or night or sunlight conditions based on the operational state of the headlights, it is possible to determine whether the visibility is good or bad (that is, the ease of operating the steering wheel).

[0012] Furthermore, since the optical sensor can be used to determine the brightness of the environment outside the vehicle, for example, this output signal is useful for estimating sunlight conditions and visibility conditions. For example, if the current date and time are known, the standard outdoor brightness can be estimated, and by comparing the estimated value with the optical sensor output signal, the current sunshine state and weather can be estimated. For example, if it is darker than usual and the wipers are operating, it can be estimated that it is raining, snowing, or foggy, and if it is darker than usual and the wipers are not operating, it can be estimated that it is cloudy.

[0013] Furthermore, the road surface temperature can be measured or estimated by photographing the road surface using, for example, an infrared camera, and based on an image analysis result of the photographed image. Thereby, it is possible to estimate the frozen state of the road surface, the snowy state, and the like. Further, if the ABS operates relatively frequently or if there is a large variation in the rotational speed of each wheel, it may be possible to estimate that the vehicle is driving on a snowy road surface. Further, it is possible to estimate the road surface condition (friction coefficient, etc.) according to the ABS operation signal (ABS operation frequency) etc. for each vehicle speed of the host vehicle.

[0014] In addition, if commonly known image analysis technology is used, based on the images taken by the vehicle-mounted camera, it is possible to detect the sunlight, rain, snow, snow cover, etc. at a detection level sufficiently useful for vehicle speed control.

[0015] Moreover, the third means provides, in the road environment considering means of the first or second means, a driving history search means to search for relevant data where the current position of the vehicle currently driving and the real-time road environment information approximately match, from the driving history data in which the position of the vehicle while driving, real-time road environment information, and vehicle speed V are recorded in association with each other, and the target speed of the currently running vehicle is determined based on the vehicle speed V recorded in the relevant data searched by this driving history search means.

[0016] However, there may be a plurality of vehicle speeds V that can be recorded for a certain passing point, depending on the number of times the vehicle has traveled at the same point. The above-mentioned vehicle speed V may be obtained by recording multiple pieces of raw data (vehicle speed V) as they are, by recording only their average value, or alternatively, statistical values such as average value and variance, raw data, and the like may all be recorded. Furthermore, when calculating any of the above statistical values, the timing for calculating individual statistical values for the measured vehicle speed may be arbitrary, for example, at the time of data recording or at the time of data retrieval. The vehicle speed V to be recorded in the above-mentioned corresponding data is not free from the arbitrary nature of these statistical operations. That is, at least one vehicle speed or vehicle speed-related value is recorded in the above-mentioned corresponding data.

[0017] According to the above means, the target speed can be determined based on the past driving history in which both the position and the real-time road environment information match. The target speed can be set to the most realistic vehicle speed for the driver when past driving history was recorded, with similar road environment conditions. In addition, even when the driver at the

time of recording driving history data is different from the driver when trying to reproduce the target vehicle speed based on the driving history data and the driving skills regarding steering wheel operation etc. differ between the two parties, by adding a means for quantitatively considering the difference in skill level, it becomes possible to set (reproduce) an ideal target speed even for the latter driver. As a means of quantifying (converting) such a difference in skill level, for example, the method described in the published patent publication Japanese Unexamined Patent Application Publication No. 7-306998: Vehicle safe driving control system and vehicle safe driving control method, and the like are publicly known.

[0018] Further, the fourth means, in any one of the first to third means described above, provides a driving history recording means for creating driving history data by correlating and recording current road environment real-time information, position, and vehicle speed V of the vehicle. If such means are used, it becomes possible to create (trace) the driving history data by oneself, in addition to entrusting the functions and effects of each of the above means. Therefore, by creating driving history data yourself, the above-mentioned "means to quantify (convert) differences in skill levels" is no longer necessary. Moreover, it becomes possible to set (reproduce) a target speed that best suits one's skill and preference.

[0019] Further, a fifth means, in the road environment considering means of any one of the first to fourth means, is equipped with a suitable value estimating means for theoretically or deterministically estimating a suitable value of a target speed of a vehicle based on real-time road environment information. However, "estimate theoretically or deterministically" as used herein refers to calculating the desired target speed by adding and converting the current road environment (variation) to the precondition (road environment) of the value based on a predetermined formula or procedure and a predetermined value that serves as the basis for calculating vehicle speed. In addition, the "predetermined value that serves as a calculation standard for vehicle speed" herein may be the vehicle speed in the driving history data, the legal speed limit at the relevant point, or some other reference value.

[0020] According to this means, if the convertible reference value (a predetermined value that is a calculation standard for vehicle speed) and the conditions related to the road environment on which the reference value is premised are known, even if driving history data that substantially matches the current road environment is not available, a suitable value for the target speed of the vehicle at the relevant point can be estimated.

[0021] Moreover, the sixth means, in the preferred value estimating means of the fifth means, is provided with a deceleration factor analysis means for calculating a deceleration coefficient α that depends on the detected or estimated road surface condition or a deceleration coefficient β that depends on the detected or estimated visibility condition, and a deceleration factor reflection means for calculating a suitable value based on the deceleration coefficient α or the deceleration coefficient β. The action and effect of this means will be specifically or partially illustrated in the examples shown below. By means of the present invention described above, the above-mentioned problems can be effectively or rationally solved.

[0022]

[Embodiments of the Invention] The present invention will be described below based on specific embodiments. However, the present invention is not limited to the embodiments shown below.

[Embodiment] FIG. 1 is a system configuration diagram of a target vehicle speed determining device 100 according to an embodiment of the present invention. The DVD 105 stores data such as map information and legal speed limits, as well as programs. A computer located at the center of the target vehicle speed determining device 100 is composed of a CPU 101, a RAM 102, a ROM 103, a memory card 104, an input/output interface (not shown), and the like. For example, the memory card 104 is configured so that it can be easily prepared, carried, replaced, etc. separately for each user; this is effective as a means for resolving individual differences such as individual skill in steering wheel operation and preferences regarding the degree of stability related to lateral G and the like.

[0023] GPS device 170 provides current vehicle position information sent from satellites. Environmental information acquisition means120 is composed of a wiper changeover switch, control wiring, or drive wiring (hereinafter simply referred to as "wiper 121"); a headlight changeover switch, control wiring, or drive wiring (hereinafter simply referred to as "headlight 122"), and a temperature sensor 123. As the temperature sensor 123, it is desirable to provide an infrared sensor that measures the road surface temperature, but it is also possible to use a commonly used outside temperature sensor or the like instead. That is, the environmental information acquiring means 120 provides a wiper activation signal, a headlight activation signal, and a road surface temperature (or outside temperature). Reference numeral 180 is a vehicle speed sensor that outputs a vehicle speed signal.

[0024] The target vehicle speed determining device 100 is connected to the ACC system 200; it outputs the target vehicle speed V0 to the ACC system 200 and receives various control signals from the ACC system 200. However, FIG. 1 shows a logical functional configuration, and of course, it is also possible to configure the target vehicle speed determining device 100 and the ACC system 200 from one physically identical computer.

[0025] FIG. 2 is a data flow related diagram illustrating an overview of the operation of the target vehicle speed determining device 100 described above. It is also fully possible to configure a target vehicle speed determining device that does not have the trace mode shown in the figure, which is mainly realized by the driving history recording means 140, and the like. Even in such a target vehicle speed determining device, the functions and effects of the present invention can be largely entrusted by the means of the present invention described above. In the following embodiments, an implementation scheme having both a "trace mode" and a "playback mode" is disclosed.

[0026] The driving history recording means 140 and the road environment considering means 110 are each realized by software running on the above-mentioned computer. The road environment considering means 110 includes driving history search means 130, and preferred value estimating means 150. The trace mode is a dedicated mode for constructing the driving history DB 10 consisting of driving history data; while this trace mode is being implemented, the target vehicle speed V0 is not output, and the above-mentioned ACC system is not used. However, in this embodiment, as will be mentioned later, even in playback mode, driving history data may be added or updated depending on the situation.

[0027]

[Trace mode] In the trace mode, the driving history recording means 140 acquires position information (current position coordinates r) from the GPS 170, and the position of a driving block (block number) that is defined by dividing it into sections approximately every 20m in the driving direction on the road being driven on is identified. The driving block DB20 is a database used to specify the block number BKN of this driving block; here, the block range coordinates (r1, r2) of each driving block, the legal speed limit Vs of the driving block, the minimum radius of curvature R of the driving block, and the like are stored in association with the block number BKN.

[0028] In addition, driving history recording means140 randomly enters road environment real-time information X (wiper operation signal, headlight operation signal, road surface temperature) obtained from the environmental information acquisition means 120 and the current vehicle speed V obtained from the vehicle speed sensor 180.

[0029] FIG. 3 is a table illustrating the record format of the driving history data 11 recorded in the driving history DB 10. The second item from the top, "Direction or Lane Classification", is for classifying the current direction of travel (up/down, etc.) on the road being driven on. This is not necessary when the block number BKN of the driving block is defined separately for each direction of travel. In such cases, lane classifications, etc. may be stored here. However, lane classification is not necessary when passing lanes and driving lanes cannot be distinguished due to GPS accuracy. Further, it is not necessarily necessary to set the target speed differently between the passing lane and the driving lane.

[0030] The road environment parameter Y in FIG. 2 is derived by the driving history recording means 140 based on the above road environment real-time information X; "Weather code y1 and sunshine code y2" of driving history data 11 in FIG. 3 correspond to this parameter Y. Examples of definitions of the weather code y1 and the sunshine code y2 are as follows:

[Definition Example 1]

(weather code y1)

"Sunny": When it's sunny

"Rain": When it rains

"Snow": When it snows

(sunshine code y2)

"Daytime": When it's bright

"Nighttime": when it's dark

[0031] In addition, the natural number n of the driving history data 11 in FIG. 3 represents the number of valid vehicle speed data, and multiple valid raw vehicle speed data can be recorded (in FIG. 3, 5 v1 to v5).). u is the average value of valid vehicle speed data, and if this value is calculated in advance in this mode, the average value u can be used as is, as the target vehicle speed V0 in the later reproduction mode. Further, σ2 is the variance of n pieces of vehicle speed data, and can be used when performing various well-known statistical operations such as evaluating the reliability of vehicle speed data. In addition, a natural number n etc. can be similarly used to evaluate the reliability of vehicle speed data. Of course, other evaluation methods that do not use variance or the like (with relatively small CPU overhead) may also be used.

[0032]

[Playback mode] In the playback mode, the block number BKN and the road environment parameter Y are specified from the current position coordinate r and the road environment real-time information X by a method equivalent to the above-mentioned driving history recording means 140; using the driving history search means 130, the driving history DB 10 is searched for driving history data 11 with matching keys (BKN, Y). However, instead of using BKN, it is also possible to search directly using r (coordinates) as a key.

[0033]

i) If two keys are hit

If there are driving history data 11 in which both keys (BKN, Y) match, the average value u can be used as is as the target vehicle speed.

However, if the reliability of the data is low, such as when the variance σ2 above is large, after performing processing such as excluding raw data (any of v1 to v5) that are far from the average value u, statistical operations such as recalculating the average value u may be performed.

[0034] In order to maintain the hit rate for the road environment parameter Y at a certain value, it is better not to subdivide the weather code y1 and the sunshine code y2 excessively; however, by subdividing these, it is possible to respond in detail to the actual road environment. As a means for resolving these trade-offs, for example, processing corresponding to the preferred value estimating means 150 in FIG. 2 illustrated below is effective.

[0035]

ii) If only block number BKN is hit

For example, the target vehicle speed V0 is calculated using the following equation (1).

[Formula 1]

$$V0=u\times(\alpha2/\alpha1)\times(\beta2/\beta1)\ldots(1)$$

However, α and β are the deceleration coefficients illustrated in FIG. 4; as illustrated in FIG. 4, α is a coefficient that depends on the detected or estimated weather (i.e., road surface condition ⇒ vehicle performance), and β is a coefficient that depends on the detected or estimated sunlight condition (i.e. visibility condition ⇒ driver's visibility). In addition, the subscript 1 refers to the coefficient value calculated from the searched record (driving history data 11) based

on the above road environment parameter Y (weather code y1 and sunshine code y2), and the subscript 2 indicates the coefficient value of each deceleration coefficient obtained from the road environment real-time information X observed in the reproduction mode. According to the definition in FIG. 4, there are six possible road environment parameters Y, so when the BKNs match and the Ys do not match, there can be a maximum of five entries with matching BKNs. Therefore, when formula (1) is used, the target vehicle speed V0 to be finally output may be selectively determined or recalculated based on the five target vehicle speeds V0.

[0036]

iii) If block number BKN misses

For example, the target vehicle speed V0 is calculated using the following equation (2).

[Formula 2]

$V0=(Vs\times\gamma)\times\alpha2\times\beta2,$

$\gamma=f(R,Vs)$...(2)

However, here, Vs is the legal speed limit, and α2 and β2 refer to the values of each deceleration coefficient (FIG. 4) obtained from the road environment real-time information X observed in the reproduction mode.

[0037] Further, the value of γ is given by a predetermined function f based on (the minimum value of) the radius of curvature R of the corresponding driving block. For example, when R≒∞ (when the road is straight), γ=1, and the value of γ monotonically increases and decreases with R. Of course, when R→0, γ→0. It is possible to determine an appropriate function for this function f empirically based on the degree of skidding of the vehicle caused by centrifugal force during cornering, or the degree of stability expected by the driver and passengers regarding lateral G (lateral acceleration). When defining this function, for example, the methods described in Japanese Unexamined Patent Application Publication Numbers H5-141979: Overspeed prediction device, H8-290728: Auto Cruise Control Method' or H8-263729: Vehicle Control Device' may be of helpful reference.

[0038] Further, the value of γ or (Vs×γ) may be stored in advance in the driving block DB 20 or in the driving history data 11 of the driving history DB 10. For example, by using such a technique, CPU overhead in real-time control in playback mode can be reduced.

[0039] Furthermore, α and β are unlikely to change suddenly due to the driving block unless in a special environment such as a tunnel, but the radius of curvature R is a parameter that can change suddenly as the vehicle advances, so it is desirable to look ahead at the required number of cases and determine the argument (independent variable R) of the function f by aiming at the smallest value among them. In addition, as a method for determining the number of read-ahead items at this time, it is effective to make the number of read-ahead items approximately proportional to the reciprocal of the block length of the driving block or the current vehicle speed V, or the like.

[0040] FIG. 5 is a sensing level determination standard table for estimating the amount of precipitation, brightness of visibility, and the like from the operating states of wipers and headlamps. For example, based on such a determination criteria table, the above-mentioned Definition Example 1 of the weather code y1 and the sunshine code y2 can be specifically rewritten as the following Definition Example 2.

[Definition Example 2]

(weather code y1)

"Sunny": when x1=0

"Rain": when x1=0, and the road surface temperature is higher than 0°C

"Snow": when x1=0, and the road surface temperature is 0°C or below

(sunshine code y2)

"Daytime": When x2≤1

"Nighttime": When x2>1

Therefore, for example, the value of the deceleration coefficient α, which depends on the road surface condition, is set to α=0.5 when x1>0 and the road surface temperature is 0°C or lower (FIG. 4B).

[0041] Of course, the definition and determination of these road environment parameters Y such as y1 and y2 may be further subdivided according to each sensing level shown in FIG. 5, for example. Additionally, various other sensors may also be used. For example, if a light sensor is used instead of a headlamp, more accurate determination can be made. That is, the definition of the road environment parameter Y (combination of sensing levels) and the various sensors to be introduced as the environmental information acquiring means 120 may be determined depending on the desired determination accuracy, expected cost, and the like.

[0042] Examples of useful sensors for these various types include, for example, a "means for acquiring a wiper operation signal, raindrop detection signal, an outside temperature signal, a road surface temperature signal, headlight activation signal, an optical sensor output signal, a current date and time signal, an ABS operation signal, a wheel rotation speed signal, an on-vehicle camera signal or a wireless device reception signal, as the real-time road environment information."

[0043] FIG. 6 is a flowchart mainly illustrating a procedure (processing execution procedure 400) when realizing when realizing the road environment considering means 110 of FIG. 2 based on software using the computer system of FIG. 1. In this process execution procedure 400, first, in step 410, the current position r is input from the GPS 170.

[0044] Next, in step 415, the block on which the vehicle is running is specified based on the input current position r. The block range coordinates (r1, r2) for specifying the block may be read directly from the above-mentioned driving block DB 20; however, basically, it is often desirable in terms of access

performance to first read from the driving history DB 10, and if there is no hit there, to read from the driving block DB 20 next.

[0045] Next, in step 420, it is determined whether the current position r is on a road designated (defined) as a target of automatic speed control.

That is, if there is no entry of the driving block having the corresponding range coordinates (r1, r2) in the driving block DB 20, the process (process execution procedure 400) is terminated. In this case, for example, a predetermined termination process may be executed to shift the operating ACC system to an off state.

[0046] When the current position r is on a road designated (defined) as a target for automatic speed control, the process moves to step 425. In step 425, the block numbers BKN of the current driving block and the previous driving block are compared; if the block number BKN has changed (if it has moved forward), the process moves to step 430; otherwise, the process moves to step 410.

[0047] In step 430, the current vehicle speed V and real-time road environment information X are input from the vehicle speed sensor 180 and the environmental information acquiring means 120. However, the actual physical input operation may be executed asynchronously with this process (process execution procedure 400). Further, the information input cycle of the environmental information acquisition means 120 may be longer than the information input cycle of the GPS 170 and the vehicle speed sensor 180. For example, such a sensor input cycle setting is effective as a measure to reduce input processing overhead when the road environment real-time information X consists of physical quantities that are unlikely to change suddenly.

[0048] In step 440, the operating status of the ACC system 200 in FIG. 1 is determined; if it is on (in operation), the process moves to step 450, and if not, the process moves to step 600. This step 600 is a process that roughly corresponds to the driving history recording means 140 that implements the above-mentioned trace mode, and this process is executed by the subroutine "RECORD2" (FIG. 8), which will be described later.

[0049] In step 450, the operating status of the ACC system 200 is further determined, and if follow-up control (automatic control of the inter-vehicle distance to the vehicle in front) is being executed, the process proceeds to step 410; otherwise, the process proceeds to step 460.

[0050] In step 460, the driving history data 11 recorded in the driving history DB 10 is searched using the driving history search means 130 shown in FIG. 2. The search key may be the aforementioned (BKN, Y). Depending on the search results, the following processes are selectively executed.

[0051] (a) If there is a hit

If there is a hit, in step 470, the process i) of the above-mentioned [playback mode] is executed.

[0052] (b) When only block number BKN is hit

In this case, in step 480, the process ii) of the above-mentioned [playback mode] is executed using the preferred value estimating means 150 of FIG. That is, the target speed V0 is calculated using equation (1).

[0053] (c) When block number BKN misses

In this case, in step 480, the process iii) of the above-mentioned [playback mode] is executed using the preferred value estimating means 150 of FIG. That is, the target speed V0 is calculated using equation (2).

[0054]

In step 490, the target speed V0 calculated in (b) or (c) above is output to the ACC system 200. In step 500, the subroutine "RECORD1" shown in FIG. 7 is called and executed. FIG. 7 is a flowchart illustrating the process execution procedure of the subroutine "RECORD1" which is called and executed from the process execution procedure 400 (step 500) of FIG. 6.

[0055] In this flowchart, first, in step 520, it is determined whether the current vehicle speed V is greater than the lower limit value Vmin of the vehicle speed to be recorded. For example, when driving on an expressway where the legal speed limit is 100 km/h, the lower limit value Vmin may be approximately 40 km/h. This is because if the vehicle is driving below this value, it is considered to be a special case such as near a toll gate, and the current vehicle speed V is not suitable as the vehicle speed to be recorded (v1 in FIG. 3).

[0056] In step 540, according to the record format shown in FIG. 3, driving history data 11 are newly created in the following manner (a) or (b) and recorded in the driving history DB 10.

(a) If BKN misses

First, the corresponding record on the driving block DB 20 is read using the current position r as a key, and six data items from BKN to R in FIG. 3 are obtained. Next, road environment parameters Y (y1, y2) are obtained from the road environment real-time information X input from the environmental information acquisition means 120. Finally, each data item is determined so as to satisfy the following equation (3).

[Formula 3]

$u=V,$

$n=1,$

$\sigma^2=0,$

$v1=V,$

$vj=0\ (j=2,3,4,5)$...(3)

However, here, V is the current vehicle speed. Through the above processing, driving history data 11 are newly created.

[0057] (b) If only BKN is hit

First, six data items from BKN to R in FIG. 3 are obtained based on the hit driving history data 11.

However, it is necessary and sufficient for this part (six data items) to exist once for each BKN, so it not necessarily required to create it for each driving history data 11, and for example, it may be made common for each entry (driving history data 11) having the same BKN in the driving history DB 10. Next, road environment parameters Y (y1, y2) are obtained from the road environment real-time information X input from the environmental information acquisition means 120. Finally, each data item is determined so as to satisfy the above equation (3). Through the above processing, driving history data 11 are newly created.

[0058] On the other hand, when executing the trace mode, the subroutine "RECORD2" in FIG. 8 is called and executed. FIG. 8 is a flowchart illustrating the process execution procedure of the subroutine "RECORD2" which is called and executed from the process execution procedure 400 (step 600) in FIG. 6.

[0059] In this flowchart, first, in step 620, the driving history DB 10 is searched using the current position r as a key; then it is checked whether there are driving history data 11 in which both the driving block (block definition range or BKN) and the road environment parameters Y (y1, y2) obtained from the road environment real-time information X input from the environmental information acquiring means 120 match. At this time, if there is no hit, the aforementioned subroutine "RECORD1" is called and executed in step 500 of FIG. 8.

[0060] On the other hand, if both (BKN, Y) are hits, step 640 is executed in the same manner as step 520 described above. In step 660, each applicable data item other than v1 among the data items in equation (3) above is updated. For example, if the third valid vehicle speed v3 to be recorded in the same driving history data 11 is obtained, n=3, v3=V, and the average value u and variance σ2 are updated.

[0061] However, if the area for storing the vehicle speed is already full, either of the following (a) or (b) may be executed.

(a) If the vehicle speed with the lowest reliability is deleted from the six vehicle speeds (v1 to v5 and the current vehicle speed V) and the current vehicle speed V remains, the same vehicle speed addition registration process as above is performed. However, if the current vehicle speed V is to be deleted, no update processing is performed. As a method for evaluating reliability, for example, an average value or a deviation from a default value that can be obtained by the above-mentioned equation (2) may be used as an index. If such update processing is performed, the reliability of recorded vehicle speed data can be increased.

[0062]

(b) Delete the oldest vehicle speed data and perform the same vehicle speed addition registration process as above. By performing such update processing, it is possible to respond to changes in the driver's driving skills, changes in preferences regarding lateral acceleration, etc., as needed.

[0063] For example, the above-described data flow in FIG. 2 can be realized by the processing execution procedure described above. Therefore, according to the target vehicle speed determining device 100 of the present embodiment, it is possible to more easily (automatically) adapt the target vehicle speed to the road environment than before.

[0064] [Other Modifications] The following information is very useful when determining default values, that is, when determining the coefficients α, β, γ, etc. described above.

(1) Tunnel information

This tunnel information relates to whether or not the vehicle is currently running in a tunnel, and it is preferable to record it on a CD, DVD, etc. in the same way as map information. Alternatively, the information may be acquired in real time from a radio, beacon, etc. Such tunnel information is very useful for calculating the coefficients α and β because the inside of the tunnel is under special environmental conditions, such as there is no risk of precipitation or snow accumulation, and it is darker than the outdoors during the daytime on a clear day.

(2) Tire information

This tire information is related to the tires of the vehicle in motion, and it is desirable to adopt a method in which it is set by simple manual operation. Since the type of tires installed (summer/winter, etc.) and the presence or absence of chains have a strong influence on braking force, cornering power, etc., this tire information is very useful in calculating the coefficients α and γ.

(3) Information received from radio

This received information relates to road conditions, traffic jams, traffic regulations, etc. during driving.

In the embodiment described above, a method was exemplified in which the legal speed limit Vs is determined by searching a predetermined recording medium such as a CD or DVD at any time. However, for example, the legal speed limit Vs is often changed temporarily due to various circumstances such as traffic congestion and traffic regulations. Usually, natural traffic jams, traffic accidents, road construction, construction around roads, large events, long holidays, etc. are factors that cause these changes. Therefore, real-time received information from the radio is useful in appropriately addressing these real-time changes.

[0067] It is also possible that snowfall may remain even after snowfall has stopped, or conversely, there may be no snowfall even though it has snowed. However, even if a method is adopted that estimates road surface conditions based on snowfall conditions (outside temperature, wiper operation, etc.), furthermore, by receiving and utilizing snowfall information distributed in real time, it is possible to appropriately deal with slightly unusual road surface conditions at any time. That is, such information is very useful in calculating the coefficients α and γ.

[0068] For example, it is quite possible to use the above information (1), (2), (3), etc. for optimizing the default values, and by utilizing this information, even more accurate speed control can be achieved.

[0069] It is also effective to configure a shared recording medium or a sharing system that allows the above-mentioned driving history DB to be made public, shared, or integrated (sharing) with others (or other vehicles). According to this configuration, people with substantially the same level of skill can lend, borrow, or share trace data (observation information).

Therefore, such a method is effective even before the DB is complete. In other words, according to such a method, people with approximately the same level of skill can perform a special conversion process related to individual differences in driving skill (mainly operating skill related to steering wheel operation). It is also possible to cooperate with each other to build the above-mentioned driving history DB. However, by performing conversion and standardization processing regarding individual differences in skills such as steering wheel operation, it is also possible for people with different driving skills to gather and cooperate with each other to construct the above-mentioned driving history DB.

[0070] Furthermore, by performing integration/editing/statistical processing on the driving history DB created as described above, it is also possible to construct a standardized standard DB that can be shared among a plurality of drivers. When constructing such a standard DB, there are no restrictions on the number of drivers (people with approximately the same level of skill as described above) who collect observation information, and the number of drivers may be at least one. If the standard DB constructed in this way is combined with a means of quantifying and taking individual skills into account, this standard DB can also be used by any other person whose individual skill level is known, based on the skill level of the above-mentioned "persons having approximately the same level of skill."

[0071] As techniques for measuring such individual skills (individual skill evaluation means), for example, those described in Japanese unexamined patent application publication “H7-306998: Vehicle safe driving control system and vehicle safe driving control method" are known. That is, by appropriately combining these technologies, it is possible to provide high added value to the above-mentioned shared recording medium and to provide high utility value to the above-mentioned sharing system.

[0072] Moreover, if such technology is used, the above-mentioned shared recording medium and sharing system need only be prepared by the automobile manufacturer or its related companies. As a result, the end user can always obtain the optimum or preferred target vehicle speed simply by registering his or her personal skill level in the ACC system or the like.

[0073] Moreover, as is clear from the above operations and effects, the target vehicle speed determining device of the present invention is of course useful as an overspeed warning device that automatically warns of overspeeding that is inappropriate for the road environment in which the vehicle is driving. For example, if the vehicle is driving at a speed that is 30% or more higher than the target speed V0 determined by the above equation (2), it is effective to issue a warning. In addition, regarding overspeed that violates such regulations (predetermined judgment using formula (2) etc.), even in the driving history recording means 140 that executes the trace mode described above, safety measures such as excluding vehicle speeds (v1 to v5) from being recorded are effective in realizing safe ACC.

[Description of Reference Numerals]

10... Driving history DB
11... Driving history data
20... Driving block DB
100...Target vehicle speed determining device
101...CPU (Central Processing Unit)
102...RAM (memory that can be randomly written)
103...ROM (read-only memory)
104...Memory card
105...DVD reading device
110...Road environment considering means
120...Environmental information acquiring means
121...Wiper
122...Headlight
123...Temperature sensor
130…Driving history search means
140... Driving history recording means
150... Preferred value estimating means
170...GPS (current position confirming means)
180...Vehicle speed sensor
200...ACC system
r. ... Current position coordinate
r1, r2 ...Driving block range coordinates
BKN…Driving block block number
Vs… Legal speed limit for driving block
R... Minimum radius of curvature of driving block
X… Real-time road environment information
Y... Road environment parameters obtained from real-time road environment information

V0… Target vehicle speed
V... Current vehicle speed
n... Number of recorded vehicle speeds
vj... Recorded vehicle speed (j is a natural number)
u... Average value of vehicle speed data
σ2 … Variance of recorded vehicle speed vj

[Figure 1]

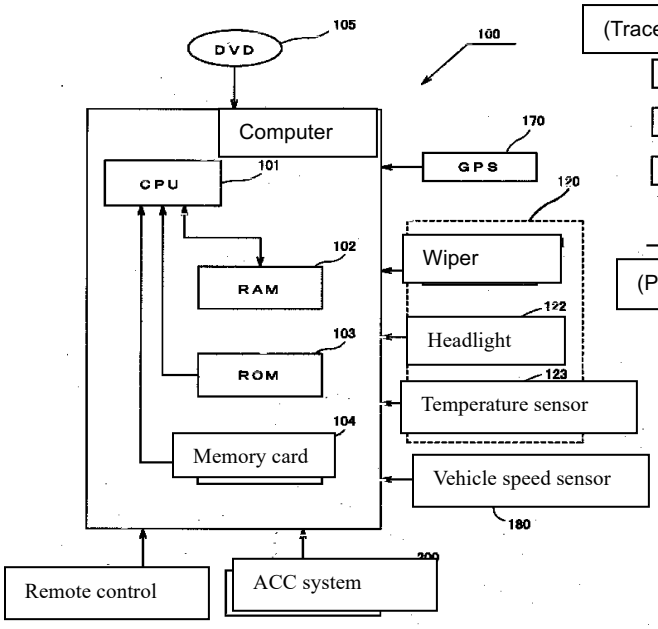

[Figure 2]

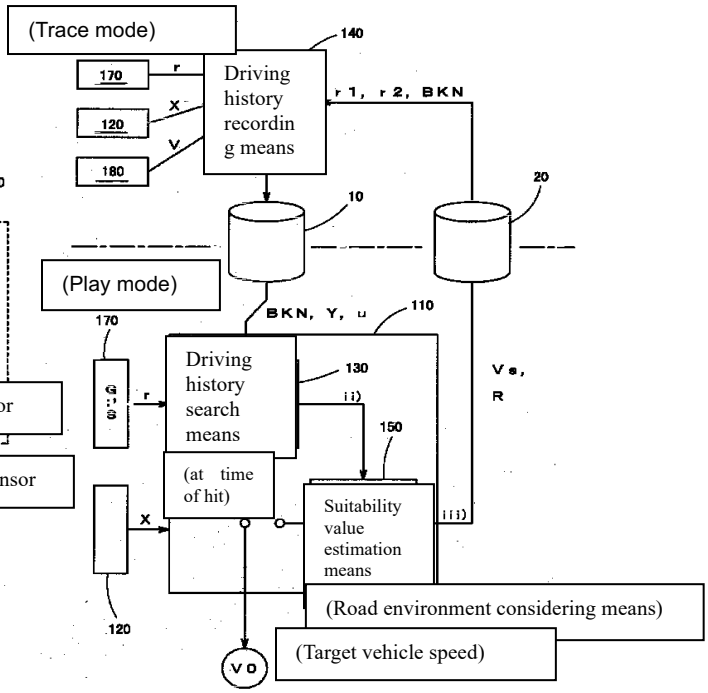

[Figure 4]

(a)

Sunlight	Daytme	Nighttime
β	1.0	0.9

(b)

Weather	Clear	Rain	Snow
α	1.0	0.8	0.5

[Figure 7]

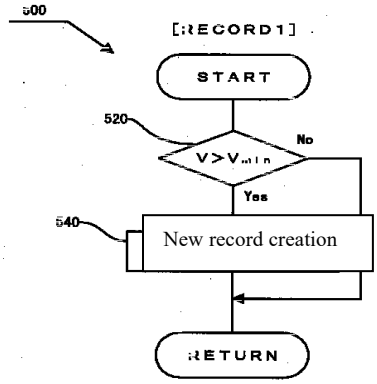

[Figure 3]

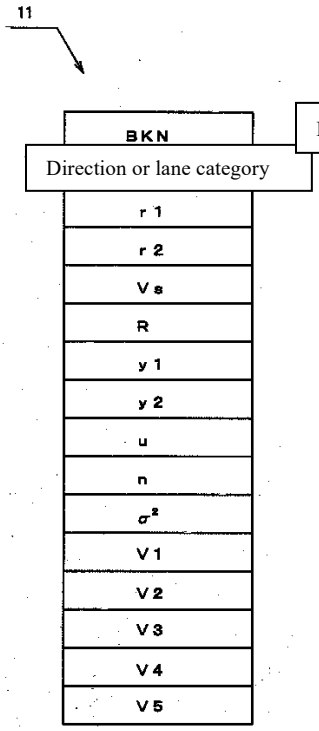

[Figure 5]

(a) Wiper

Operating speed	止	弱	中	強
Detection level x 1	0	1	2	3

(b) Headlights

Main light	×				○	
Side light	×		○		–	–
Fog lamp	×	○	×	○	×	○
Detection level x2	0	1	1	2	3	4

× … OFF ○ … ON

[Figure 8]

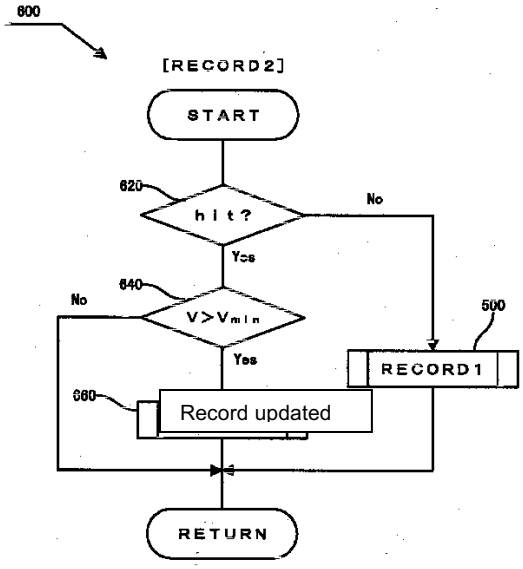

[Figure 9]

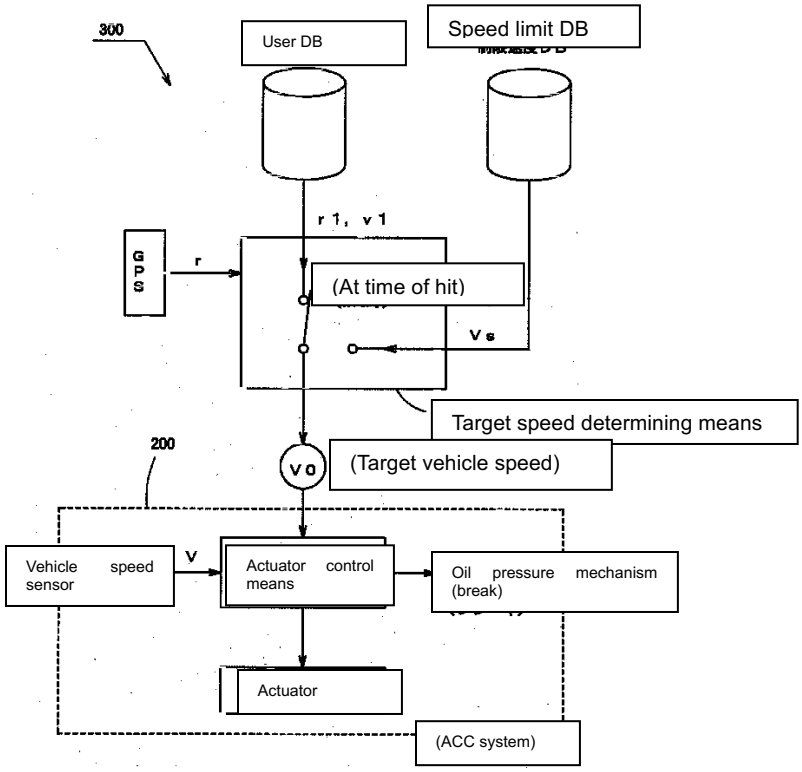

[Figure 6]

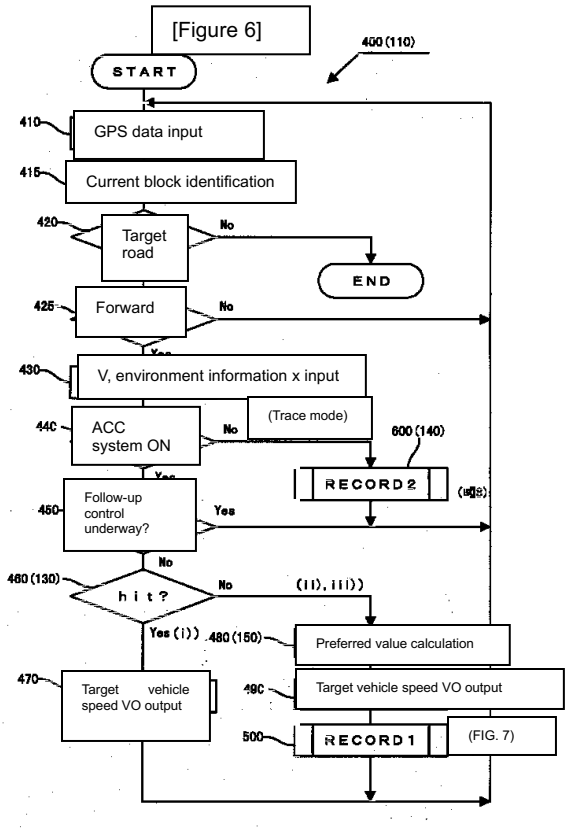

Continued from the front page

(72) Inventor Yuji Uchiyama
c/o Toyota Central R&D Labs., Inc.; 41-1
Yokomichi, Nagakute, Aichi-gun, Aichi-ken

(72) Inventor Nobuyuki Shiraki
c/o Toyota Central R&D Labs., Inc.; 41-1
Yokomichi, Nagakute, Aichi-gun, Aichi-ken

[F-term (reference)] 3D044 AA01 AA21 AA24 AA35 AA36
AB01 AC26 AC56 AC59 AC61
AC62 AD02 AD21 AE04 AE21
3G093 AA01 BA07 BA23 BA27 DB05
DB09 DB16 EA01 EB04 FA04
5H180 AA01 CC04 CC12 EE13 FF05
LL01 LL02 LL09 LL15 LL16