Eric G. Maurer (GA Bar # 478199)
(pro hac vice forthcoming)
Email: e.maurer@thip.law
Cynthia J. Lee (GA Bar # 442999)
(pro hac vice forthcoming)
Email: c.lee@thip.law
THOMAS | HORSTEMEYER, LLP
3200 Windy Hill Road, Suite 1600E
Atlanta, Georgia 30339
Telephone: 770-933-9500
Fax: 770-951-0933

J. Mark Holland (CA Bar No. 140453)
Email: mholland@jmhlaw.com
J. MARK HOLLAND & ASSOCIATES
a Professional Law Corporation
19800 MacArthur Boulevard, Suite 300
Irvine, CA 92612
Telephone: (949) 718-6750
Facsimile: (949) 718-6756

Counsel for Plaintiff Danco, Inc.

IN THE UNITED STATES DISTRICT COURT
CENTRAL DISTRICT OF CALIFORNIA
SOUTHERN DIVISION

DANCO, INC. a Delaware corporation, Plaintiff, v. FLUIDMASTER, INC., a California corporation; and DOES 1 THROUGH 5, inclusive, Defendants.	Civil Action No. _____ **COMPLAINT FOR PATENT INFRINGEMENT** **JURY TRIAL DEMANDED**

Plaintiff Danco, Inc. ("Danco"), by and through its undersigned attorneys, files this Complaint for Patent Infringement against Defendant Fluidmaster, Inc. ("Fluidmaster"), and in support thereof alleges as follows:

NATURE AND BASIS OF THE ACTION

1. This is an action for patent infringement under the patent laws of the United States, 35 U.S.C. § 1 *et seq.* Danco seeks damages and recovery of its

reasonable costs and attorneys' fees.

1. Plaintiff Danco is one of the largest plumbing repair, replacement, and remodel suppliers in the home improvement industry. Danco offers for sale its innovative plumbing solutions through various nationwide retailers, such as Home Depot, Lowe's, and Menards.

2. Danco's history of innovation in the plumbing industry and innovative plumbing solutions have resulted in the issuance of dozens of patents on its industry-leading, consumer-driven patented solutions, including, but not limited to, the toilet fill valves disclosed in U.S. Patent Nos. 9,103,105 ("the '105 Patent"), 9,139,993 ("the '993 Patent"), and 10,934,698 ("the '698 Patent"), collectively the Danco Fill Valve Patents. True and correct copies of the Danco Fill Valve Patents are attached hereto as Exhibits A, B, and C, respectively.

3. Fluidmaster is a manufacturer, supplier, seller, and/or distributor of plumbing and repair products.

4. Fluidmaster has made and continues to make, has used and continues to use, has offered for sale and continues to offer, and has sold and continues to sell various toilet fill valves under its own brand, such as, for example, at least the Fluidmaster PRO45U, PRO45HR, 400H, 400AH, and 400H-002 ("the Accused Products"), as discussed in more detail below.

5. The Accused Products have been and continue to be offered for sale and sold in the United States through various retailors and/or distributors, including nationwide retailors such as Home Depot and Ferguson.

6. By making, using, offering for sale, selling, and/or importing the Accused Products, Fluidmaster has infringed and continues to infringe one or more claims of the Danco Fill Valve Patents. As a consequence of Fluidmaster's infringement, Danco seeks a preliminary injunction, a permanent injunction, and monetary damages with respect to sales of the Accused Products. Moreover, Danco respectfully submits that, upon information and belief, the present case is exceptional and Danco is entitled to enhanced damages against Fluidmaster and an award of its reasonable attorneys' fees and costs.

THE PARTIES

7. Plaintiff Danco, Inc. is a Delaware corporation having its principal place of business at 2727 Chemsearch Boulevard, Irving, Texas 75062.

8. Upon information and belief, Defendant Fluidmaster, Inc., is a California corporation having a regular and established place of business at 30800 Rancho Viejo Road, San Juan Capistrano, California 92675. Upon further information and belief, Fluidmaster may be served by serving its Registered Agent Robert Adolf Andersonschoepe at its registered address of 30800 Rancho Viejo Road, San Juan Capistrano, California 92675.

JURISDICTION AND VENUE

9. This Court has jurisdiction over the subject matter of this action pursuant to 28 U.S.C. § 1331 and 1338(a) because this Complaint includes a cause of action for patent infringement under the patent laws of the United States, including, but not limited to, 35 U.S.C. §§ 271, 281, 283-285, and 287.

10. This Court has personal jurisdiction over Fluidmaster by virtue of the fact that Fluidmaster resides in this District, has transacted business in this District, has derived substantial revenue from goods offered for sale and/or sold in this District, and/or has established sufficient minimum contacts with the State of California such that it is subject to the personal jurisdiction of this Court. Personal jurisdiction in California over Fluidmaster is also consistent with the requirements of due process.

11. Venue is proper in this district under 28 U.S.C. §§ 1391 and 1400(b) because Fluidmaster resides in this District, has a regular and established place of business in this District located at 30800 Rancho Viejo Road, San Juan Capistrano, California 92675, has committed acts of infringement in this District, and a substantial part of the events or omissions giving rise to the claims occurred in this District.

DANCO AND ITS PATENT RIGHTS

12. Danco has invested a substantial amount of time and resources designing, developing, and bringing new and innovative products in the plumbing industry.

13. Danco has designed and developed a wide range of new and innovative plumbing connector products, including a number of innovative toilet fill valves. Specifically, Danco research and development staff designed and developed a number of innovative toilet fill valves that allow for the installation or replacement of toilet fill valves without tools and saving of water.

14. As a result of these efforts, Danco has been granted a number of U.S. patents on its innovative fill valves, including the Danco Fill Valve Patents.

15. The application for the '105 Patent, entitled "Toilet Fill Valve," was filed on August 12, 2014, and was duly and legally issued as U.S. patent by the United States Patent and Trademark Office ("USPTO") on August 11, 2015. *See* Exhibit A.

16. The application for the '993 Patent, entitled "Toilet Fill Valve," was filed on January 27, 2014, and was duly and legally issued as U.S. patent by the United States Patent and Trademark Office ("USPTO") on September 22, 2015. *See* Exhibit B.

17. The application for the ’968 Patent, entitled “Toilet Valve,” was filed on November 18, 2019, and was duly and legally issued as U.S. patent by the United States Patent and Trademark Office (“USPTO”) on March 2, 2021. *See* Exhibit C.

18. Danco is the owner by assignment of all rights, title, and interest in and to the Danco Fill Valve Patents, including the right to make, use, offer for sale, sell, or import patented products and to enforce the Danco Fill Valve Patents.

FLUIDMASTER’S INFRINGING CONDUCT

19. Fluidmaster has made and continues to make, has used and continues to use, has offered for sale and continues to offer for sale, and has sold and continues to sell various toilet fill valves under its own brand, such as, for example, at least the Fluidmaster PRO45U, PRO45HR, 400H, 400AH, and 400H-002 products.

20. The Fluidmaster Accused Products have been made available for retail sale by Fluidmaster and/or through various nationwide retailers, such as, for example, Home Depot, Lowe’s, Menards and/or Ace Hardware, as well as through wholesalers/distributors such as Ferguson.

21. Upon information and belief, Fluidmaster has known of and has had actual knowledge of the Danco Fill Valve Patents.

22. As discussed in more detail below, the Fluidmaster Accused Products have infringed and continue to infringe, directly and indirectly, at least:

a. Claims 1, 9, 15, and 24 of the '105 Patent;

b. Claims 1, 8, and 14 of the '993 Patent;

and

c. Claims 1, 12, 17, and 22 of the '698 Patent

by Fluidmaster's making, using, importing, selling, and/or offering to sell the Accused Products within the United States and without authority in violation of 35 U.S.C. §§ 271(a)-(c).

23. Fluidmaster has directly infringed and continues to directly infringe, literally or under the doctrine of equivalents, at least the above-identified claims of the Danco Fill Valve Patents by, without authority, making, using, importing, selling, or offering to sell the Accused Products within the United States in violation of 35 U.S.C. § 271(a).

24. Fluidmaster has indirectly infringed and continues to indirectly infringe at least the above-identified claims of the Danco Fill Valve Patents within the United States by inducement under 35 U.S.C. § 271(b). For example, Fluidmaster has knowingly and intentionally induced users of the Accused Products to directly infringe at least the above-identified claims of the Danco Fill Valve Patents, *inter alia*, by i) providing installation instructions on how to install and use the Accused Products in an infringing manner, and ii) directing and

encouraging the actions of employees, distributors, and customers to directly infringe.

25. Fluidmaster has indirectly infringed and continues to infringe at least the above-identified claims of the Danco Fill Valve Patents by contributing to the direct infringement of end users under 35 U.S.C. § 271(c) by providing the Accused Products, which were especially made for and used in a manner that infringed at least the above-identified claims of the Danco Fill Valve Patents, and that had no substantial non-infringing use.

26. By such acts, Fluidmaster has injured Danco and is thus liable to Danco for infringement of the above-identified claims of the Danco Fill Valve Patents pursuant to 35 U.S.C. § 271.

COUNT I – DIRECT INFRINGEMENT OF THE DANCO FILL VALVE PATENTS BY FLUIDMASTER

27. Danco incorporates and re-alleges the allegations contained in Paragraphs 1 through 31 above as if fully set forth herein.

28. Fluidmaster has directly infringed and continues to infringe, literally or under the doctrine of equivalents, at least the above-identified claims of the Danco Fill Valve Patents by, without authority, making, using, importing, selling, or offering to sell the Accused Products within the United States in violation of 35 U.S.C. § 271(a).

29. As an example, a summary of Fluidmaster's infringement of claim 1 of the '105 Patent is provided as follows:

a. Limitation 1: The Accused Products include a toilet fill valve;

b. Limitation 2: The body of the valve has an extended portion, wherein the extended portion is integrally molded with the body, wherein the extended portion forms a bowl fill outlet port;

c. Limitation 3: The valve has a water inlet configured to receive water from a water source; and

d. Limitation 4: The valve has a tank water outlet configured to provide a first portion of the water to a toilet tank during at least a portion of a flush cycle.

e. Limitation 5: The valve includes diverter inserts (water flow regulators) that are configured to attach directly to the extended portion of the valve body, wherein a portion of the diverter insert is configured to insert into, and come into contact with, the extended portion of the valve body, wherein the diverter insert is configured to receive a second portion of the water from the bowl fill outlet port during at least a portion of the flush cycle, wherein the diverter insert is configured to constrict

a flow rate of the second portion of the water that flows through the diverter insert.

f. Limitation 6: The valve includes a tube that is configured to attach directly to the diverter inserts, wherein the tube is configured to direct the second portion of the water from the bowl fill restriction directly to a toilet tank overflow tube

Accordingly, Fluidmaster's Accused Products directly infringe at least claim 1 of the '105 Patent in violation of 35 U.S.C. § 271(a).

34. As a result of Fluidmaster's infringement of the Danco Fill Valve Patents, Danco has been damaged by Fluidmaster's unlawful conduct. Danco is entitled to recover damages pursuant to 28 U.S.C. § 284 adequate to compensate it for Fluidmaster's infringing activities in an amount to be determined at trial, but in no event less than a reasonable royalty.

35. Fluidmaster's infringement of the Danco Fill Valve Patents has injured and continues to injure Danco and will cause irreparable harm unless Fluidmaster is enjoined from infringing the claims of the Danco Fill Valve Patents. Accordingly, Danco is entitled to temporary, preliminary, and/or permanent injunctive relief against Fluidmaster from further infringement pursuant to 35 U.S.C. § 283.

36. Upon information and belief, Fluidmaster's infringement of the Danco Fill Valve Patents has been deliberate, willful, which warrants an award of treble damages and attorneys' fees to Danco pursuant to 28 U.S.C. §§ 284 & 285.

COUNT II – INDUCED INFRINGEMENT OF THE DANCO FILL VALVE PATENTS

37. Danco incorporates and re-alleges the allegations contained in Paragraphs 1 through 36 above as if fully set forth herein.

38. Upon information and belief, since at least as early as 2012 Fluidmaster has known of and has had actual knowledge one or more of the applications that issued as one or more of the Danco Fill Valve Patents, and since at least as early as 2015 Fluidmaster has known of and has had actual knowledge of one or more of the Danco Fill Valve Patents.

39. Fluidmaster directed, instructed, and encouraged its employees, distributors, and/or customers to make, install and/or use the Accused Products in an infringing manner in its product packaging and product advertising, by providing support and technical assistance, and by providing installation instructions or instructional materials, among other acts.

40. When the Accused Products were used by Fluidmaster's employees, distributors, and customers in the manner instructed and directed by Fluidmaster,

Fluidmaster's employees, distributors, and customers directly infringed at least the above-referenced claims of the Danco Fill Valve Patents, as set forth above.

41. Accordingly, Fluidmaster indirectly infringed the Danco Fill Valve Patents by inducing infringement of the Danco Fill Valve Patents, pursuant to 35 U.S.C. § 271(b).

42. As a result of Fluidmaster's infringement of the Danco Fill Valve Patents, Danco has been damaged by Fluidmaster's unlawful conduct. Danco is entitled to recover damages pursuant to 28 U.S.C. § 284 adequate to compensate it for Fluidmaster's infringing activities in an amount to be determined at trial, but in no event less than a reasonable royalty.

43. Fluidmaster's infringement of the Danco Fill Valve Patents has injured and continues to injure Danco and will cause irreparable harm unless Fluidmaster is enjoined from infringing the claims of the Danco Fill Valve Patents. Accordingly, Danco is entitled to temporary, preliminary, and/or permanent injunctive relief against Fluidmaster from further infringement pursuant to 35 U.S.C. § 283.

44. Upon information and belief, Fluidmaster's past and continued infringement of the Danco Fill Valve Patents has been deliberate, willful, which warrants an award of treble damages and attorneys' fees to Danco pursuant to 28 U.S.C. §§ 284 & 285.

COUNT III – CONTRIBUTORY INFRINGEMENT OF THE DANCO FILL VALVE PATENTS

45. Danco incorporates and re-alleges the allegations contained in Paragraphs l through 44 above as if fully set forth herein.

46. Upon information and belief, since at least as early as 2012 Fluidmaster has known of and has had actual knowledge one or more of the applications that issued as one or more of the Danco Fill Valve Patents, and since at least as early as 2015 Fluidmaster has known of and has had actual knowledge of one or more of the Danco Fill Valve Patents.

47. Fluidmaster has provided its distributors and customers with the Accused Products, which are essential to practice the inventions of the Danco Fill Valve Patents.

48. Fluidmaster was aware that the Accused Products were especially made for or adapted for use in a manner that infringed at least the above-referenced claims of the Danco Fill Valve Patents.

49. Fluidmaster was aware that the Accused Products were not a staple article or commodity of commerce suitable for substantial non-infringing use, and had no substantial non-infringing use, in that the Accused Products could only be used in a manner that infringed the Danco Fill Valve Patents.

50. When the Accused Products are used by Fluidmaster's distributors and customers, the Accused Products directly infringe at least the above-referenced claims of the Danco Fill Valve Patents, as set forth above.

51. Accordingly, Fluidmaster has indirectly infringed the Danco Fill Valve Patents by contributing to infringement of the Danco Fill Valve Patents, pursuant to 35 U.S.C. § 27l(c).

52. As a result of Fluidmaster's infringement of the Danco Fill Valve Patents, Danco has been damaged by Fluidmaster's unlawful conduct. Danco is entitled to recover damages pursuant to 28 U.S.C. § 284 adequate to compensate it for Fluidmaster's infringing activities in an amount to be determined at trial, but in no event less than a reasonable royalty.

53. Fluidmaster's infringement of the Danco Fill Valve Patents has injured and continues to injure Danco and will cause irreparable harm unless Fluidmaster is enjoined from infringing the claims of the Danco Fill Valve Patents. Accordingly, Danco is entitled to temporary, preliminary, and/or permanent injunctive relief against Fluidmaster from further infringement pursuant to 35 U.S.C. § 283.

54. Upon information and belief, Fluidmaster's past and continued infringement of the Danco Fill Valve Patents has been deliberate, willful, which

warrants an award of treble damages and attorneys' fees to Danco pursuant to 28 U.S.C. §§ 284 & 285.

PRAYER FOR RELIEF

WHEREFORE, Danco prays that this Court enter judgment in favor of Danco and against Fluidmaster as follows:

A. Entry of judgment that Fluidmaster has directly and indirectly infringed the Danco Fill Valve Patents pursuant to 35 U.S.C. § 271 (a), (b), and/or (c);

B. An order that Fluidmaster provide an accounting and pay to Danco damages in an amount adequate to compensate Danco for Fluidmaster's infringement of the Danco Fill Valve Patents, including damages for lost profits, but in no event less than a reasonable royalty, including up to treble damages for willful infringement pursuant to 35 U.S.C. § 284;

C. An order preliminarily and permanently enjoining Fluidmaster and its respective agents, servants, officers, directors, employees, attorneys, affiliated companies, successors-in-interest, and all those in active concert or participation with it, and all other parties properly enjoined by law, from infringing directly or indirectly, inducing others to directly infringe, and/or

Fluidmaster, Inc. - EX1003, Page 015
IPR2024-00633 (Fluidmaster Inc v. Danco Inc)

contributing to the infringement of the claims of the Danco Fill Valve Patents;

D. An order that this is an exceptional case under 35 U.S.C. § 285 meriting that Danco be awarded its costs, including its reasonable attorneys' fees and other expenses incurred in connection with this action; and,

E. Any other relief that the Court finds legal, just and equitable, as may be available under law or equity, and which the Court finds proper.

DEMAND FOR TRIAL BY JURY

Danco demands trial by jury of all issues so triable, pursuant to Rule 38 of the Federal Rules of Civil Procedure.

Respectfully submitted,

Dated: June 28, 2023

/s/ J. Mark Holland .
Eric G. Maurer (GA Bar # 478199)
(pro hac vice forthcoming)
Cynthia J. Lee (GA Bar # 442999)
(pro hac vice forthcoming)
THOMAS | HORSTEMEYER, LLP

J. Mark Holland
J. MARK HOLLAND & ASSOCIATES
Counsel for Plaintiff Danco, Inc.

\\BIG19\z\Winword\DANCO\L4110\PLEADING\Complaint - Related\2023-06-28-As_Filed\2023-06-28_Complaint_THrev5_Final.docx

EXHIBIT A

Danco's '993 Patent

Fluidmaster, Inc. - EX1003, Page 017
IPR2024-00633 (Fluidmaster Inc v. Danco Inc)

US009139993B1

(12) **United States Patent**
Schuster et al.

(10) **Patent No.: US 9,139,993 B1**
(45) **Date of Patent: *Sep. 22, 2015**

(54) **TOILET FILL VALVE**

(71) Applicant: **Danco, Inc.**, Irving, TX (US)

(72) Inventors: **Michael J. Schuster**, Shorewood, IL (US); **Larry Schneider**, Wadsworth, IL (US)

(73) Assignee: **Danco, Inc.**, Irving, TX (US)

(*) Notice: Subject to any disclaimer, the term of this patent is extended or adjusted under 35 U.S.C. 154(b) by 0 days.

This patent is subject to a terminal disclaimer.

(21) Appl. No.: **14/164,424**

(22) Filed: **Jan. 27, 2014**

Related U.S. Application Data

(63) Continuation of application No. 13/346,355, filed on Jan. 9, 2012, now Pat. No. 8,650,671, which is a continuation of application No. 12/786,904, filed on May 25, 2010, now Pat. No. 8,104,105, which is a continuation of application No. 10/958,797, filed on Oct. 5, 2004, now Pat. No. 7,743,436, which is a continuation-in-part of application No. 10/798,606, filed on Mar. 11, 2004, now Pat. No. 6,823,889.

(51) **Int. Cl.**
E03D 1/00 (2006.01)
E03D 1/32 (2006.01)

(52) **U.S. Cl.**
CPC ***E03D 1/32*** (2013.01)

(58) **Field of Classification Search**
CPC E03D 1/32
USPC 4/331, 324, 366, 415, 675; 285/91; 137/15.26, 432, 434, 436, 437, 137/441–444
See application file for complete search history.

(56) **References Cited**

U.S. PATENT DOCUMENTS

136,128	A	2/1873	Bralley
994,746	A	6/1911	Dwyer
996,743	A	7/1911	Yancey
1,113,057	A	10/1914	Schumann
1,787,601	A	1/1931	Swanberg
2,087,503	A	7/1937	Clemmons
2,465,866	A	3/1949	Gaines
2,512,176	A	6/1950	Shaffer
2,736,037	A	2/1956	Hardie
2,791,235	A	5/1957	Smith
2,799,865	A	7/1957	Schuster
3,040,769	A	6/1962	Lamb
3,086,546	A	4/1963	Brown

(Continued)

OTHER PUBLICATIONS

US Patent 6,823,889, File History, 2004-2005 Great-Great-Grandparent Patent to this Application (copy not attached).

(Continued)

Primary Examiner — Tuan N Nguyen
(74) *Attorney, Agent, or Firm* — Thomas | Horstemeyer, LLP

(57) **ABSTRACT**

In various embodiments, a water inlet of a toilet fill valve receives water from a water supply. A tank water outlet of the toilet fill valve provides a first portion of the water to a toilet tank. A bowl fill outlet port of the toilet fill valve provides a second portion of the water to a bowl fill restriction that is in direct contact with an extended portion of the toilet fill valve. The bowl fill restriction restricts the flow of the second portion of the water. The bowl fill restriction provides the second portion of the water to a tube that is in direct contact with the bowl fill restriction. The tube provides the second portion of the water to a toilet tank overfill tube.

20 Claims, 9 Drawing Sheets

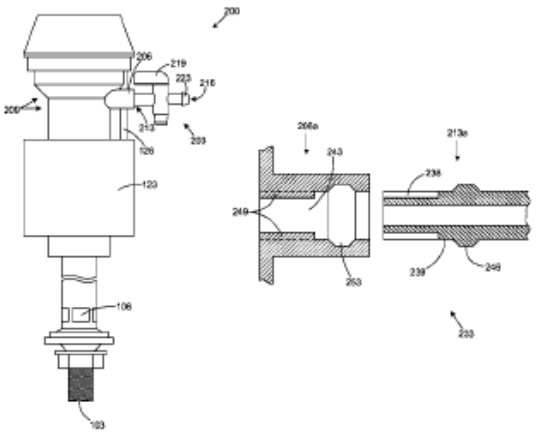

(56) **References Cited**

U.S. PATENT DOCUMENTS

3,172,128	A	3/1965	Ducey
3,321,972	A	5/1967	Goldtrap
3,457,947	A	7/1969	Fitzgerald
3,744,064	A	7/1973	Preston
3,762,395	A	10/1973	Taylor
3,986,216	A	10/1976	Davis et al.
3,994,628	A	11/1976	Kemper
4,007,498	A	2/1977	Pearson
4,017,916	A	4/1977	Pearson
4,032,822	A	6/1977	Un
4,090,532	A	5/1978	Story, Jr.
4,134,164	A	1/1979	Sanmartin Rial
4,145,775	A	3/1979	Butler
4,351,071	A	9/1982	Clar
4,392,260	A	7/1983	Bensen
4,420,845	A	12/1983	Antunez
4,505,231	A	3/1985	Syler
4,527,295	A	7/1985	Lacore
4,700,413	A	10/1987	Lopez
4,707,867	A	11/1987	Kawabe et al.
4,764,996	A	8/1988	Pino
4,770,388	A	9/1988	Carman
4,793,588	A	12/1988	Laverty, Jr.
4,898,124	A	2/1990	Granberg et al.
4,918,764	A	4/1990	Haselswerdt et al.
4,980,932	A	1/1991	Stemples
5,007,452	A	4/1991	Antunez
5,036,553	A	8/1991	Sanderson
5,052,060	A	10/1991	Makita et al.
5,083,323	A	1/1992	Cannan
5,134,729	A	8/1992	Shaw
5,228,152	A	7/1993	Fraley
5,232,011	A	8/1993	Royalty
5,245,710	A	9/1993	Haselswerdt et al.
5,327,931	A	7/1994	Royalty
5,362,026	A	11/1994	Kobayashi et al.
5,432,959	A	7/1995	Ellsworth et al.
5,442,820	A	8/1995	Becker
5,469,586	A	11/1995	Tsutsui et al.
5,542,448	A	8/1996	Campbell et al.
5,624,073	A	4/1997	Mueller et al.
5,708,991	A	1/1998	DeMarco
5,715,860	A	2/1998	Horad
5,742,951	A	4/1998	Wright et al.
5,775,366	A	7/1998	Ray
5,794,279	A	8/1998	Schwartz
5,862,537	A	1/1999	Osmond
5,926,868	A	7/1999	Bjerke
6,047,725	A	4/2000	Gish et al.
6,202,227	B1	3/2001	Gurowitz
6,209,576	B1	4/2001	Davis
6,219,856	B1	4/2001	Alles
6,263,519	B1	7/2001	Parsons et al.
6,295,660	B1	10/2001	Schuster
6,385,788	B1	5/2002	Wasielewski
6,409,221	B1	6/2002	Robinson et al.
6,560,790	B2	5/2003	Saar et al.
6,823,889	B1	11/2004	Schuster
2002/0092090	A1	7/2002	Johnson
2002/0162166	A1	11/2002	Saar et al.
2004/0199989	A1*	10/2004	Trolio 4/427

OTHER PUBLICATIONS

US Patent 7,743,436, File History, 2004-2010 Great-Grandparent Patent to this Application (copy not attached).
US Patent 8,104,105, File History, (2010-2012) Grandparent to this Application (copy not attached).
U.S. Appl. No. 13/346,355 File History (2012-2014) Parent to this Application (copy not attached).

* cited by examiner

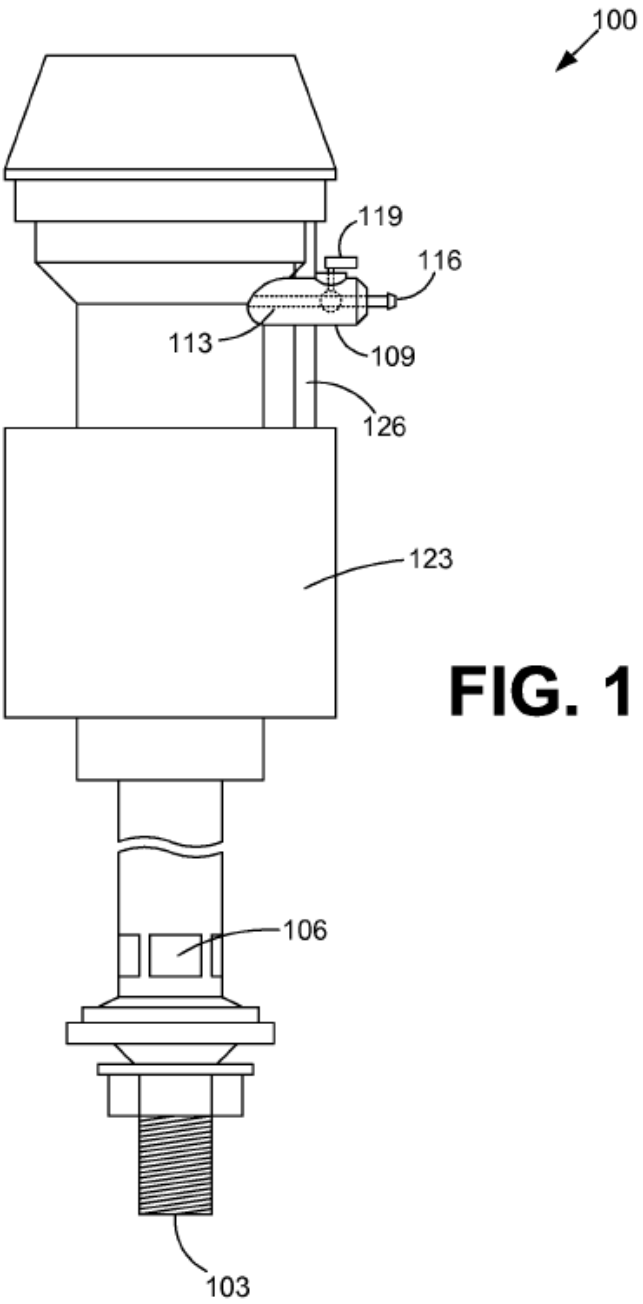

FIG. 1

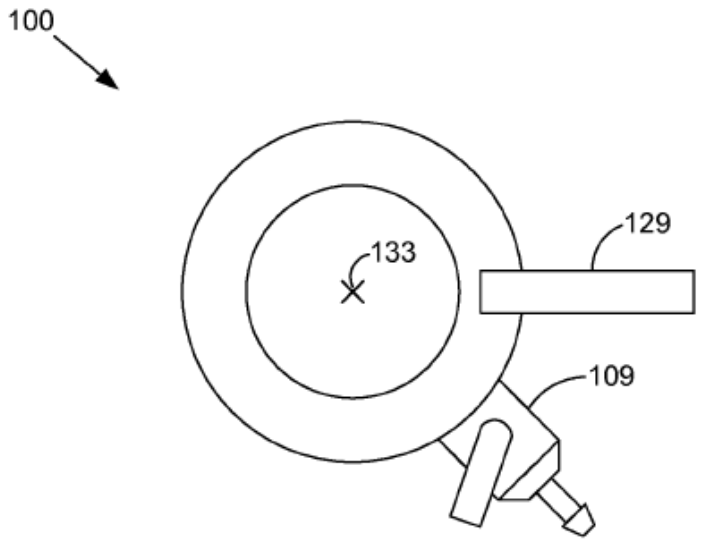

FIG. 2

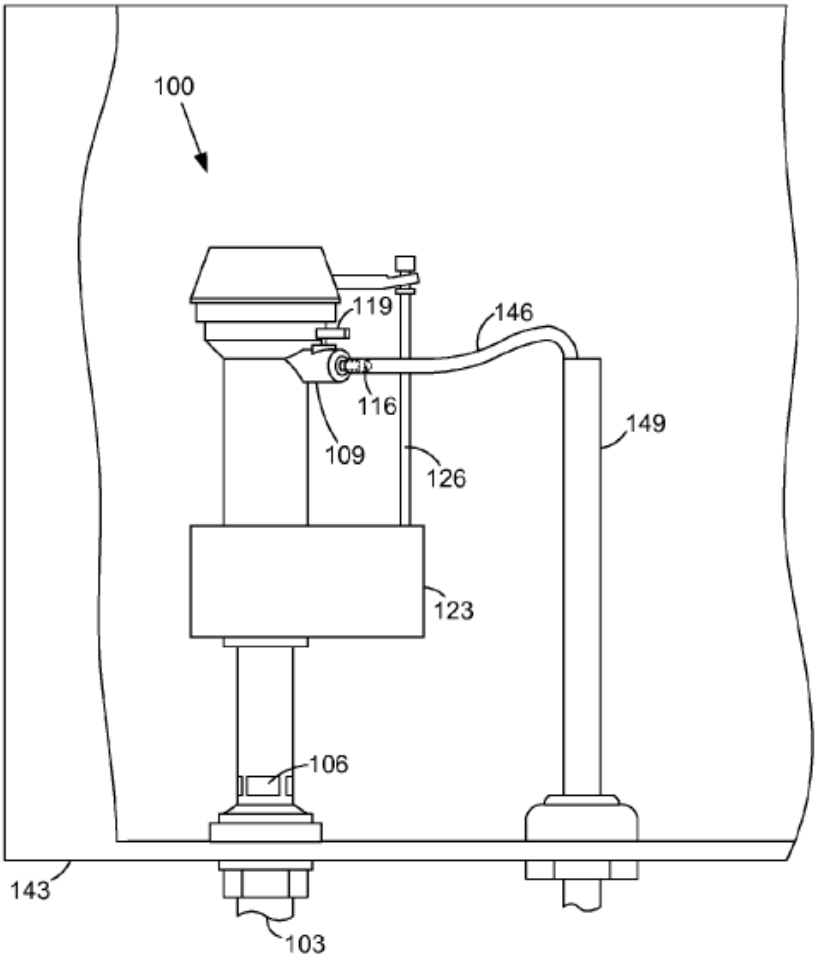

FIG. 3

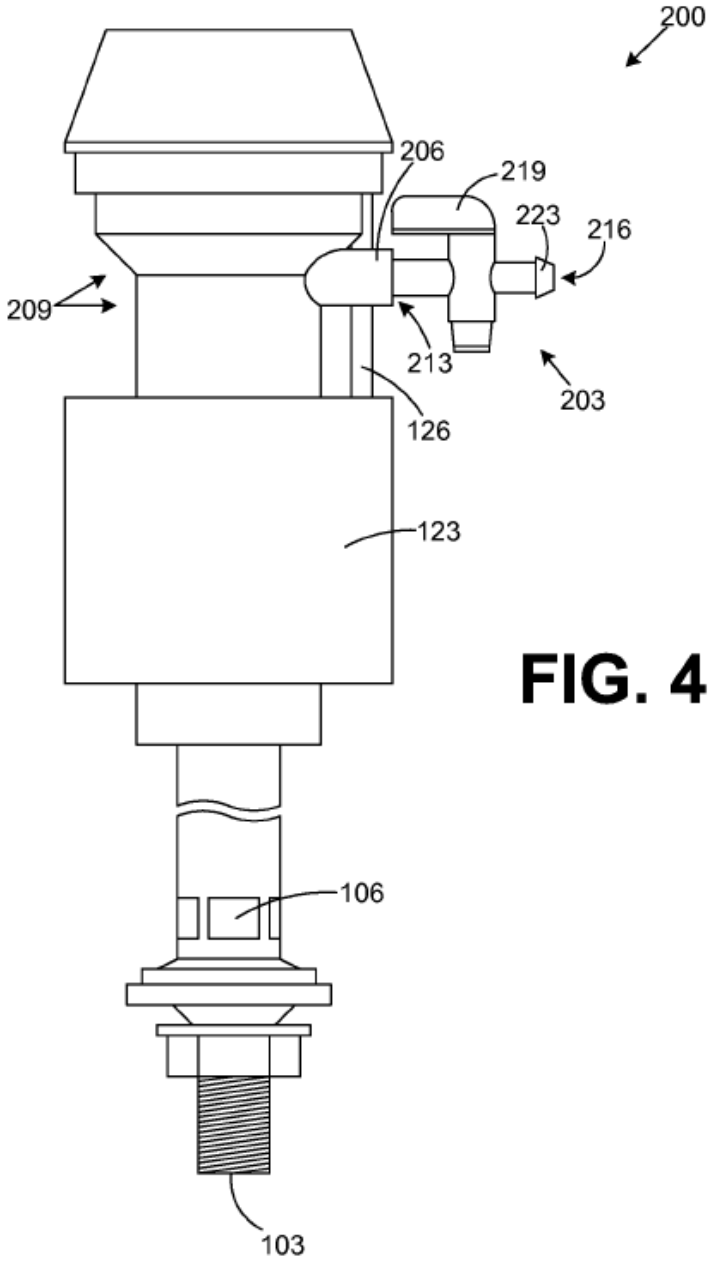

FIG. 4

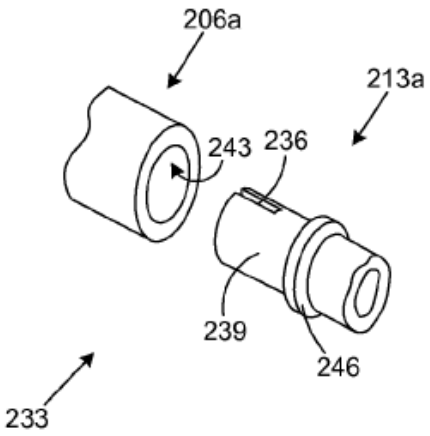

FIG. 5A

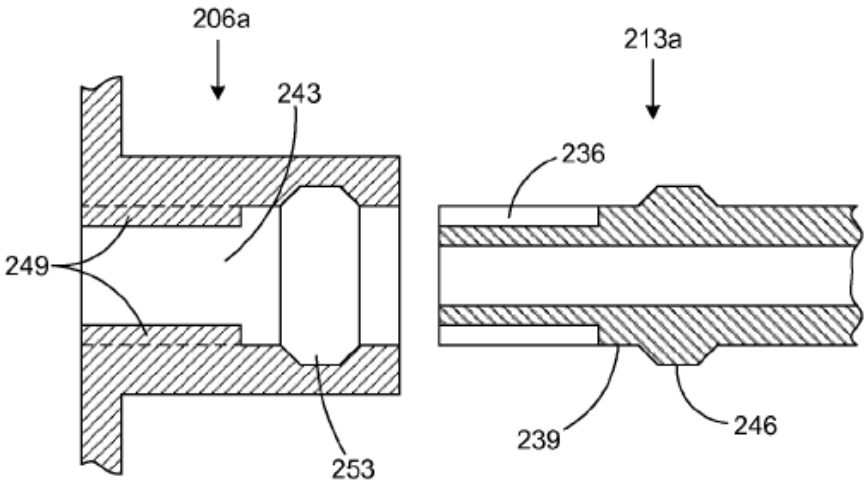

FIG. 5B

233

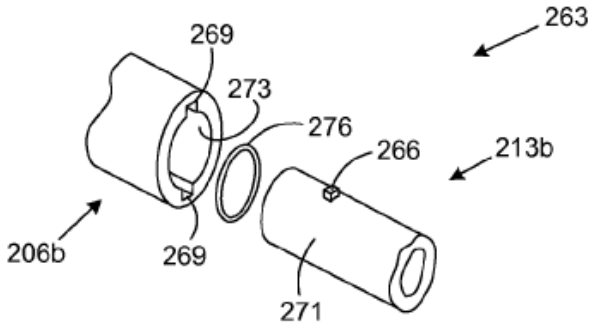

FIG. 6A

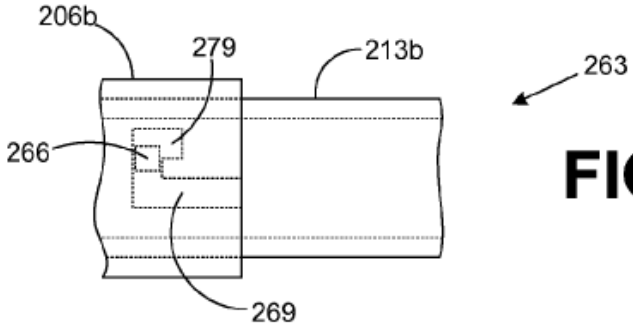

FIG. 6B

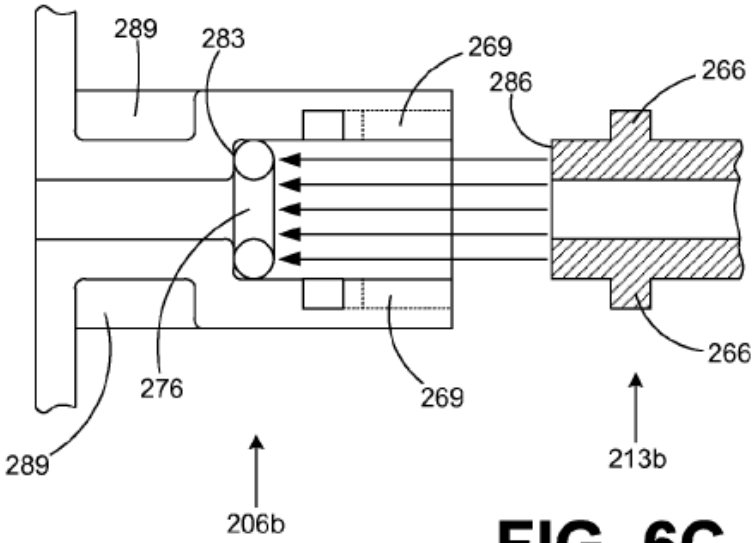

FIG. 6C

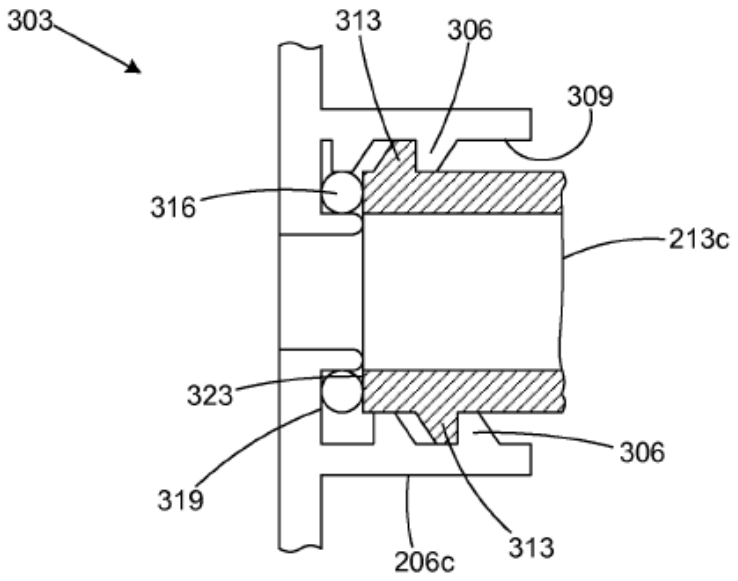

FIG. 7

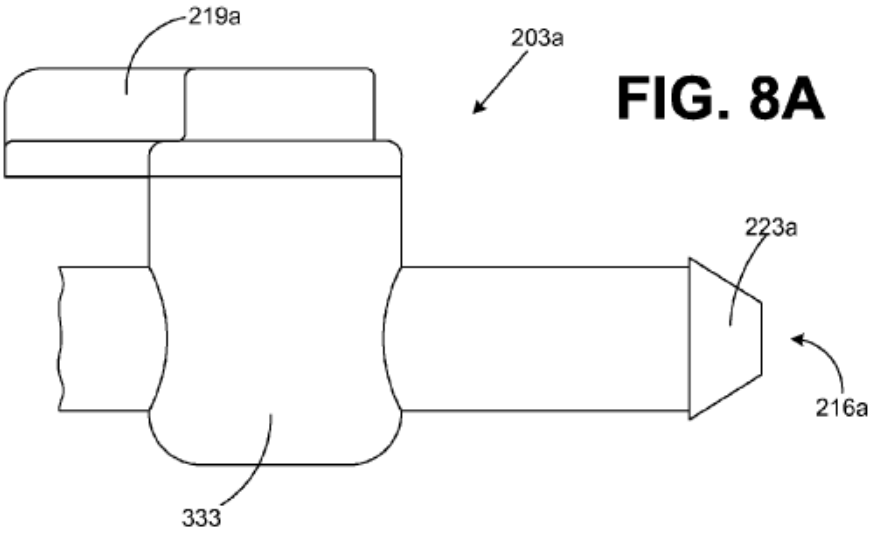

FIG. 8A

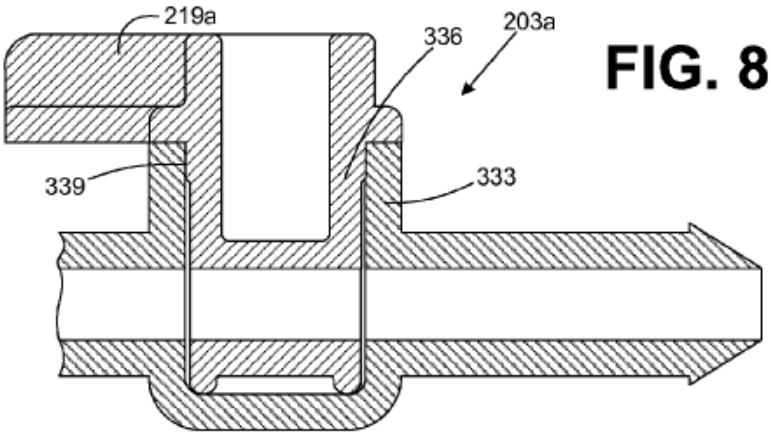

FIG. 8B

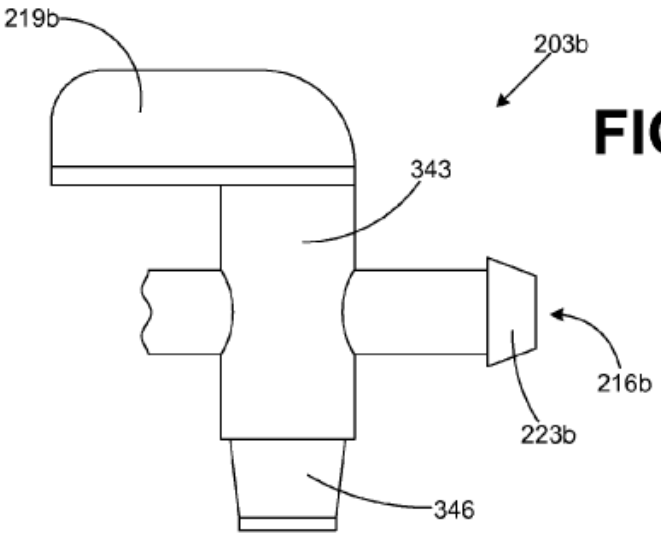

FIG. 9A

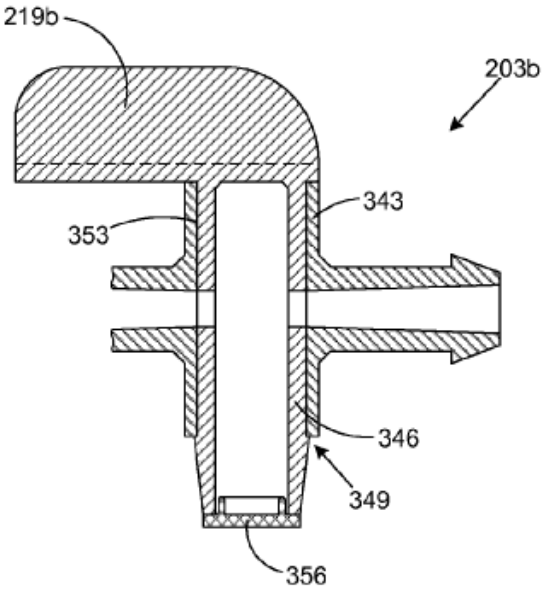

FIG. 9B

TOILET FILL VALVE

CROSS REFERENCE TO RELATED APPLICATIONS

The present patent application is a Continuation Application of, and claims priority to, U.S. patent application entitled "Toilet Fill Valve with Adjustable Bowl Fill Flow" filed on Jan. 9, 2012 and assigned Ser. No. 13/346,355, which is a Continuation Application of, and claims priority to, U.S. patent application entitled "Toilet Fill Valve with Adjustable Bowl Fill Flow" filed on May 25, 2010 and assigned Ser. No. 12/786,904, which is a Continuation Application of, and claims priority to, U.S. Pat. No. 7,743,436 entitled "Toilet Fill Valve with Adjustable Bowl Fill Flow" filed on Oct. 5, 2004, which is a Continuation-in-Part Application of, and claims priority to, U.S. Pat. No. 6,823,889 entitled "Toilet Fill Valve with Adjustable Bowl Fill Flow" filed on Mar. 11, 2004.

BACKGROUND

A toilet fill valve in a toilet typically includes a water outlet that provides water for refilling a toilet bowl during a flush cycle. Unfortunately, the water flowing out of such conventional water outlets to fill a toilet bowl provide much more water than is necessary to fill the average toilet bowl. Consequently, much of the water that flows into a toilet bowl during the average flush cycle is lost down the drain. This translates into a loss of millions of gallons of water each year.

BRIEF DESCRIPTION OF THE SEVERAL VIEWS OF THE DRAWINGS

The invention can be understood with reference to the following drawings. The components in the drawings are not necessarily to scale. Also, in the drawings, like reference numerals designate corresponding parts throughout the several views.

FIG. **1** is a drawing of a side view of a toilet fill valve according to an embodiment of the present invention;

FIG. **2** is a drawing of a top view of the toilet fill valve of FIG. **1**;

FIG. **3** is a drawing of a cutaway view of a toilet tank within which the toilet fill valve of FIG. **1** is installed;

FIG. **4** is a drawing of a side view of a toilet fill valve according to an embodiment of the present invention;

FIGS. **5**A and **5**B are drawings that illustrate one example of a coupling of a bowl fill valve to the toilet fill valve of FIG. **4** according to an embodiment of the present invention;

FIGS. **6**A, **6**B, and **6**C are drawings that illustrate another example of a coupling of a bowl fill valve to the toilet fill valve of FIG. **4** according to an embodiment of the present invention;

FIG. **7** is a drawing that illustrates still another example of a coupling of a bowl fill valve to the toilet fill valve of FIG. **4** according to an embodiment of the present invention;

FIGS. **8**A and **8**B are drawings that illustrate an example of a bowl fill valve that is coupled to the toilet fill valve of FIG. **4** according to an embodiment of the present invention; and

FIGS. **9**A and **9**B are drawings that illustrate another example of a bowl fill valve that is coupled to the toilet fill valve of FIG. **4** according to an embodiment of the present invention.

DETAILED DESCRIPTION

With reference to FIG. **1**, shown is a toilet fill valve **100** according to an embodiment of the present invention. The

toilet fill valve **100** includes a water inlet **103** at the bottom of the toilet fill valve **100** that is configured to be coupled to a water source outside of a toilet tank within which the toilet fill valve **100** is installed. The toilet fill valve **100** includes one or more water outlets **106** that are configured to supply water into a toilet tank within which the toilet fill valve **100** is installed. The toilet fill valve **100** may be, for example, a pilot style fill valve. However, it is understood that the toilet fill valve **100** may be any style of fill valve such as, for example, a ballcock valve, etc. The toilet fill valve **100** also includes a bowl fill valve **109** according to an embodiment of the present invention. The bowl fill valve **109** includes a bowl fill valve inlet **113** and a bowl fill valve outlet **116**. In addition, the bowl fill valve **109** includes a handle **119** that facilitates a manual adjustment of the bowl fill valve **109**.

The bowl fill valve **109** is integral with the toilet fill valve **100**. In this respect, the term "integral" refers to the fact that the bowl fill valve **109** and the toilet fill valve **100** comprise a single structure. In this respect, the bowl fill valve **109** may be included within the body of the toilet fill valve **100** as a portion of the toilet fill valve **100** in a single piece construction. Specifically, the bowl fill valve **109** may be molded as a portion of the toilet fill valve **100** or it may be snapped or clamped into place, or it may be attached to the toilet fill valve **100** in some other manner, etc.

Within the toilet fill valve **100**, the bowl fill valve inlet **113** is operatively coupled to the water inlet **103**. In this respect, when the toilet fill valve **100** is open and water flows from the water inlet **103** to the water outlets **106** and into a toilet tank, an amount of water is also supplied to the bowl fill valve inlet **113** that flows through the bowl fill valve **109** and out the bowl fill valve outlet **116**. By virtue of the manual setting of the handle **119** of the bowl fill valve **109**, the flow of water through the bowl fill valve **109** is regulated. In this manner, the flow of water is regulated so that enough water flows out of the bowl fill valve **109** to fill a toilet bowl without wasting any water down a drain.

Thus, the bowl fill valve **109** is configured to supply an adjustable flow of water out of the bowl fill outlet **116** that is directed to a toilet bowl during a flush cycle of a toilet to fill the toilet bowl. The flow of water is adjusted so that just enough flows out of bowl fill valve **109** so as to fill the toilet bowl without wasting any water.

The toilet fill valve **100** includes a float **123** that is operatively coupled to an actuating arm (not shown) by a translating stem **126**. The float **123** floats on the water within a toilet tank and, depending on the location of the float **123** along the toilet fill valve **100**, the toilet fill valve **100** is open or closed as can be appreciated by those with ordinary skill in the art. The bowl fill valve **109** and the actuating arm (not shown) are each located on the toilet fill valve **100** so as to prevent any interference between the bowl fill valve **109** and the translational stem **126** or the actuating arm as will be discussed.

According to an embodiment of the present invention, the bowl fill valve **109** may include a number of biased positions. In this respect, the movement of the handle **119** may cause the bowl fill valve **109** to move from one predefined biased position to other predefined biased positions. In this respect, various mechanisms such as tabs, snaps, or other position biasing structures may be employed. The biased positions of the bowl fill valve **109** help ensure that the bowl fill valve **109** remains in a given setting selected by a user by a manual manipulation of the handle **119** during the normal course of operation of the toilet fill valve **100**. Thus, by virtue of the biased positions, the bowl fill valve **109** is prevented from moving out of a desired

position set by a user over a long period of use due to vibration and other factors as can be appreciated by those with ordinary skill in the art.

The bowl fill valve **109** may be, for example, a ball valve, a gate valve, a globe valve, a plug valve, a diaphragm valve, a butterfly valve, a needle valve, a sliding gate, a quick turn valve, a knife valve or any other appropriate type of valve as can be appreciated by those with ordinary skill in the art.

To operate the toilet fill valve **100**, the toilet fill valve **100** is first installed within a toilet tank. When a toilet is flushed and the tank is drained, the float **123** moves downward along the toilet fill valve **100** and, consequently, the toilet fill valve **100** opens to allow water to flow from the water inlet **103** and out the water outlets **106** into a toilet tank. At the same time, water flows into the bowl fill valve inlet **113** and out the bowl fill valve outlet **116** through the bowl fill valve **109**. Based on the setting of the handle **119**, the bowl fill valve **109** determines the precise flow rate of the water that flows out the bowl fill valve outlet **116**. A tube is typically employed to direct the water flowing out the bowl fill valve outlet **116** to an overflow tube in the toilet tank. In this respect, the water flowing out the bowl fill valve outlet **116** refills the toilet bowl of the respective toilet.

Referring next to FIG. **2**, shown is a top view of the toilet fill valve **100** according to an embodiment of the present invention. In this respect, the actuating arm **129** of the bowl fill valve **100** is seen with respect to the bowl fill valve **109**. The actuating arm **129** is coupled to the float by way of the translational stem **126** (FIG. **1**). In this respect, the actuating arm **129** extends in an orthogonal direction relative to a longitudinal axis **133** of the toilet fill valve **100**. The longitudinal axis **133** is centered in the toilet fill valve **100** along the length of the toilet fill valve **100**. Also, the bowl fill valve **109** extends in an orthogonal direction relative to the longitudinal axis **133** of the toilet fill valve **100**. In order to prevent interference between the bowl fill valve **109** and the translational stem **126** or the actuating arm **129**, the actuating arm **129** is angularly offset relative to the bowl fill valve **109** as shown. In this respect, the translational stem **126** is coupled to the free end of the actuating arm **129**. By virtue of the angular offset between the bowl fill valve **109** and the actuating arm **129**, the operation of the bowl fill valve **109** does not interfere with the operation of the toilet fill valve **100** itself by virtue of the fact that the float **123** (FIG. **1**) can move freely with the movement of the translational stem **126** in order for proper operation of the toilet fill valve **100**.

With reference to FIG. **3**, shown is the toilet fill valve **100** as installed within a toilet tank **143** according to an embodiment of the present invention. In this respect, the toilet fill valve **100** includes the water inlet **103** that is coupled to a water source outside of the toilet tank **143**. The toilet fill valve **100** also includes one or more water outlets **106** that direct a flow of water into the toilet tank **143** during the operation of a flush cycle. The bowl fill valve **109** includes the bowl fill valve inlet (not shown) and the bowl fill valve outlet **116**, where the bowl fill valve inlet is operatively coupled to the water inlet **103** as described above. Also, the bowl fill valve **109** is integrated with the body of the toilet fill valve **100** as described above.

A tube **146** is coupled to the bowl fill valve outlet **116** and is directed into the overflow tube **149** of the toilet tank **143**. The tube **146** directs water that flows out of the bowl fill valve outlet **116** into the overflow tube **149** and refills the toilet bowl associated with the toilet tank **143** as can be appreciated by those with ordinary skill in the art. The bowl fill valve **109** is configured to supply the adjustable flow of water out the bowl fill valve outlet through the tube **146** and into the overflow tube **149** for filling the toilet bowl during the flush cycle of the toilet. In this respect, no pressure is seen within the tube **146**. Specifically, the fact that the bowl fill valve **109** is integral with the toilet fill valve **100** prevents the creation of a pressure head in the tube **146** as would be the case if the bowl fill valve **109** were included in the middle of the tube **146**. The fact that a pressure head is not created in any portion of the tube **146** prevents the tube **146** from working its way off of the bowl fill valve outlet **116** over time.

When installed, the bowl fill valve **109** is calibrated for the particular flush cycle of the toilet within which the toilet fill valve **100** is installed. To calibrate the bowl fill valve **109**, a user first determines the water level in the toilet bowl when the toilet bowl is full of water. This gives the user a starting and an ending point for determining when the toilet bowl of the respective toilet is full. Next, the bowl fill valve handle **109** is adjusted so that the bowl fill valve **109** is placed in a predefined position that allows a predefined flow of water to refill the toilet bowl. In this manner, one adjusts the actual flow of water that refills the toilet bowl. Thereafter, the user flushes the toilet itself. Next, the user determines if the flow of water into the toilet bowl by virtue of the adjustments made to the bowl fill valve **109** is adequate to refill the toilet bowl during the flush cycle. This may be determined, by identifying whether the level of the water in the toilet bowl reaches the full level determined at the beginning of the bowl fill valve calibration above.

The flow of water from the bowl fill valve **109** should be set so as to ensure that the water level in the toilet bowl reaches the full level at about the same time that the flush cycle ends. In other words, the level of water in the toilet bowl should reach its highest level at the same time that the flush cycle ends. This prevents any water from being lost down the drain associated with the toilet.

If the amount of water that flows into the toilet bowl is inadequate to refill the toilet bowl during the flush cycle as described above, then one should repeat the steps of adjusting the bowl fill valve, flushing the toilet, and then once again determining if the flow of water into the toilet bowl is adequate to refill the toilet bowl during a flush cycle.

Ultimately, during use of the toilet that includes the toilet fill valve **100** and the toilet tank **143**, a user flushes the toilet and a predetermined flow of water exits the bowl fill valve outlet **116** and is directed into the toilet bowl. After the toilet tank has drained during the flush cycle, a flapper closes in the toilet tank and the toilet tank refills. During the refilling of the tank, the water supplied by the bowl fill valve **109** fills the toilet bowl itself. The amount of water supplied by the bowl fill valve in the time it takes to refill the toilet tank should be approximately equal to the amount of water needed to fill the toilet bowl. By virtue of the fact that the bowl fill valve **100** is integrated within the toilet fill valve **100**, a pressure head is prevented from being created due to any potential pinching of the tube **146** or other similar adjustment mechanism.

With reference to FIG. **4**, shown is a toilet fill valve **200** according to another embodiment of the present invention. The toilet fill valve **200** includes the same water inlet **103** and the water outlets **106** as the toilet fill valve **100** (FIG. **1**). The toilet fill valve **200** also includes the float **123** and the translational stem **126** as was described with reference to the toilet fill valve **100**. In addition, the toilet fill valve **200** includes a bowl fill valve **203** that is integral with the toilet fill valve **200** as will be described. As stated above, the term "integral" refers to the fact that the bowl fill valve **200** and the toilet fill valve **100** comprise a single structure. In this embodiment, the

bowl fill valve **200** is a separate component that is attached the body of the toilet fill valve **100**, thereby forming the integral, single structure.

The toilet fill valve **200** also includes a bowl fill outlet port **206** that radially extends from a portion of a body **209** of the toilet fill valve **200**. In this respect, the bowl fill outlet port is operatively coupled to the water inlet **103**. In particular, when the toilet fill valve **200** is in an "on" state, water that flows in the water inlet **103** flows out of both the water outlets **106** and the bowl fill outlet port **206**. The water flowing out of the bowl fill outlet port **206** flows through the bowl fill valve **203** as will be described.

The bowl fill valve **203** includes a bowl fill valve inlet port **213** and a bowl fill valve outlet port **216**. The bowl fill valve inlet port **213** is compatible with the bowl fill outlet port **206**, where the bowl fill valve inlet port **213** is coupled to the bowl fill outlet port **206** when the bowl fill valve **203** is coupled or affixed to the toilet fill valve **200**. The bowl fill valve inlet port **213** is compatible with the bowl fill outlet port **206** in the sense that both the bowl fill valve inlet port **213** and the bowl fill outlet port **206** comprise various structures that couple together when the bowl fill valve **203** is connected to the bowl fill outlet port **206** as will be described. In particular, various embodiments of the coupling between the bowl fill valve inlet port **213** and the bowl fill outlet port **206** are described herein.

The bowl fill valve **203** also includes a handle that may be adjusted by hand to adjust a flow of water through the bowl fill valve **203** during a flush operation of a toilet in which the toilet fill valve **200** is installed. Typically, the handle **219** is initially adjusted to a desired position when the toilet fill valve **200** is installed and generally remains in such position for the continued operation of the toilet fill valve **200**. During the life cycle of the bowl fill valve **203**, it may be possible that the bowl fill valve **203** is adjusted to take into account various changes in the operation of the toilet fill valve **200** such as, for example, changes in pressure or other operational changes.

The bowl fill valve **203** also includes a nipple **223**. The nipple **223** is adapted to mate with a tube that extends from the bowl fill valve outlet port **216** to the overfill tube **149** (FIG. **3**) in a manner similar to that as shown in FIG. **3** with respect to the tube **146** (FIG. **3**) that extends from the nipple **116** (FIG. **3**) to the overflow tube **149** (FIG. **3**). The bowl fill valve **203** extends beyond the bowl fill outlet port **206** in a radial direction with respect to the portion of the body **209** of the toilet fill valve **200**.

In some embodiments, the bowl fill outlet port **206** may comprise a female receptacle and, correspondingly, the bowl fill valve inlet port **213** may comprise a male end compatible with the female receptacle. Alternatively, the bowl fill valve inlet port **213** may comprise a female receptacle and the bowl fill outlet port **206** may comprise a male end compatible with such female receptacle.

The toilet fill valve **200** further includes an actuating arm (not shown) that extends in a radial direction that is orthogonal relative to a longitudinal axis of the toilet fill valve **200** in a manner similar as that described with reference to the toilet fill valve **100** (FIG. **1**). The longitudinal axis is defined as an axis that runs from the water inlet **103** through the body **209** of the toilet fill valve **200** and out the top of the toilet fill valve **200**. In one embodiment, the bowl fill valve **203** extends radially in an orthogonal direction relative to such longitudinal axis of the toilet fill valve **200**. Also, in one embodiment, the actuating arm is angularly offset relative to the bowl fill valve **203** to prevent interference between the bowl fill valve **203** and the translational stem **126** that extends from the float **123** to a free end of the actuating arm. This allows the float **123** to move up and down and to engage the actuating arm during the normal operation of the toilet fill valve **200** during various flush cycles.

In addition, the bowl fill valve **203** may be constructed with a number of biased positions that help prevent the bowl fill valve **203** from moving out of adjustment over time when the force of pressure develops therein. Also, the biased positions aid a user in actual adjustment of the bowl fill valve **203** as can be appreciated.

The toilet fill valve **200** provides an advantage in that the body **209** of the toilet fill valve **200** may be constructed with the bowl fill outlet port **206** using a molding process that is much less complex than attempting to mold the entire bowl fill valve **203** within the structure of the body **209** as a single molded construction as was described with reference to one embodiment of the toilet fill valve **100**. In this regard, the bowl fill valve **203** may be constructed as a separate component to the body **209** of the toilet fill valve **200** and assembled for distribution to end users.

Due to the fact that the bowl fill valve **203** is affixed to the toilet fill valve **200** through the coupling of the bowl fill outlet port **206** with the bowl fill valve inlet port **213**, then a pressure head that develops within the bowl fill valve **203** due to the adjustment of the handle **219** during operation of the toilet fill valve **200** will not cause the bowl fill valve **203** to fall off of the toilet fill valve **200**. Thus, when the toilet fill valve **200** is installed in a toilet tank **143**, a user may adjust the opening of the bowl fill valve **203** by adjusting the handle **219** until a desired flow of water flows out of the bowl fill valve outlet port **216** into a tube and into the overflow tube **149** of a toilet. This flow of water is typically established to refill a toilet bowl of a toilet. In this regard, the flow of the water into the overflow tube **149** that refills the toilet bowl during a toilet flush operation may be regulated or adjusted so as to minimize or eliminate the amount of water that is lost down the drain of a toilet due to over filling of the toilet bowl during a flush cycle of a toilet. In one embodiment, the bowl fill valve **203** is adjusted until the filling of the toilet bowl of the toilet coincides with the end of the flush cycle, thereby resulting in little or no loss of water.

Referring next to FIG. **5**A, shown is a coupling **233** between one embodiment of the bowl fill outlet port **206**, denoted herein as bowl fill outlet port **206***a*, and an embodiment of the bowl fill valve inlet port **213**, denote herein as bowl fill valve inlet port **213***a*. The bowl fill valve inlet port **213***a* includes a slot **236** in a side wall **239**. The bowl fill outlet port **206***a* comprises a rib (not shown) that extends from a side wall **243** that is inserted into the slot **236** when the bowl fill inlet port **213***a* is inserted into the bowl fill outlet port **206***a*. The mating of the slot **236** with the rib prevents the rotation of the bowl fill valve **213***a* with respect to the bowl fill outlet port **206***a* when the bowl fill valve inlet port **213***a* is inserted into the bowl fill outlet port **206***a*. Alternatively, there may be a number of slots **236** in the side wall **239** of the bowl fill valve inlet port **213***a* and a corresponding number of ribs extending from the side wall **243** of the bowl fill outlet port **206***a*.

The bowl fill valve inlet port **213***a* also includes an annular protrusion **246** that extends from the side wall **239** of the bowl fill valve inlet port **213***a*. Correspondingly, an annular groove (not shown) in the side wall **243** of the bowl fill valve outlet port **206***a* is provided that mates up with the annular protrusion **246** when the bowl fill valve inlet port **213** is inserted into the bowl fill outlet port **206***a*. In this respect, the annular protrusion **246** is snap fit into the annular groove (not shown), thereby affixing the bowl fill valve **203***a* to the bowl fill valve outlet port **206***a*.

Turning then to FIG. **5**B, shown is a cutaway view of the coupling **233** between the bowl fill outlet port **206***a* and the bowl fill valve inlet port **213***a* according to an embodiment of the present invention. In this respect, the bowl fill outlet port **206***a* is depicted with two ribs **249** extending from the side wall **243** within the bowl fill outlet port **206***a*. Also, the bowl fill outlet port **206***a* includes the annular groove **253** into which the annular protrusion **246** snaps when the bowl fill valve inlet port **213***a* is inserted into the bowl fill outlet port **206***a*. In this respect, the mating of the annular protrusion **246** with the annular groove **253** fixes the bowl fill valve **203** to the bowl fill outlet port **206***a*. In this respect, the bowl fill valve **203** becomes an integral portion of the toilet fill valve **200**.

Also, the fit between the annular protrusion **246** is a snug fit that forms a seal between the bowl fill outlet port **206***a* and the bowl fill valve inlet port **213***a* that prevents the leakage of water from the coupling **233** during a flush cycle. Alternatively, a snug fit may occur between other mating surfaces of the bowl fill outlet port **206***a* and the bowl fill valve inlet port **213***a* that prevents leakage of water from the coupling **233**.

With reference to FIGS. **5**A and **5**B, even though the slots **236** are depicted as being formed within the side wall **239** of the bowl fill valve inlet port **213** and the ribs **249** extend from the side wall **243** within the bowl fill outlet port **206**, it is possible that this arrangement may be reversed where the slots **236** are formed in the side wall **243** of the bowl fill outlet port **206***a* and the ribs **249** extend from the side wall **239** of the bowl fill valve inlet port **213***a*. In addition, the annular groove **253** may be created in the side wall **239** of the bowl fill valve inlet port **213** and the annular projection **246** may extend inward from the side wall **243** within the bowl fill outlet port **206** in a reverse arrangement than that shown with reference to FIG. **5**B.

Referring next to FIGS. **6**A, **6**B, and **6**C, shown is a coupling **263** between another embodiment of the bowl fill outlet port **206**, denoted herein as bowl fill outlet port **206***b*, and another embodiment of the bowl fill valve inlet port **213**, denoted herein as bowl fill valve inlet port **213***b*. The bowl fill valve inlet port **213***b* includes at least two locking ears **266** that mate with corresponding locking grooves **269** in the bowl fill outlet port **206***b*. In particular, the locking ears **266** extend from a side wall **271** of the bowl fill valve inlet port **213***b*. The locking grooves **269** are disposed in the side wall **273** of the bowl fill outlet port **206***b*. When the bowl fill valve **203** is inserted and twisted into the bowl fill outlet port **206***b*, each of the locking ears **266** is situated in a locking position of one of the locking grooves **269** as will be described. The coupling **263** further comprises a sealing ring **276** that may be, for example, a rubber O-ring or other type of sealing ring. The sealing ring **276** is compressed between an end of the bowl fill valve inlet port **213***b* and a seat within the bowl fill outlet port **206***b* as we described. While at least two locking ears **266** and corresponding locking grooves **269** are shown, it is possible that a design may be employed that comprises a single locking ear **266** and a single corresponding locking groove **269**.

With reference to FIG. **6**B, shown is a portion of the bowl fill valve inlet port **213***b* and the bowl fill outlet port **206***b* as the bowl fill valve inlet port **213***b* is inserted into the bowl fill outlet port **206***b* and is partially rotated such that the locking ears **266** are almost located in the locking positions **279**. In this respect, each of the locking grooves **269** is a "J" formation. The J formation of the locking grooves **269** allows the locking ears **266** to slide down and around the partial loop of the J and seat in the locking position **279** such that the sealing ring **276** exerts a force against the end of the bowl fill valve inlet port **213***b*, thereby pushing the locking ears **266** into the locking positions **279** of the locking grooves **269** and holding the locking ears **266** in place. This ensures that the bowl fill valve **203** remains coupled to the bowl fill outlet port **206***b*.

With reference to FIG. **6**C, shown is a cutaway view of the coupling **263** between the bowl fill outlet port **206***b* and the bowl fill valve inlet port **213***b*. In this respect, the bowl fill valve inlet port **213***b* is inserted into the bowl fill outlet port **206***b* in a manner such that the locking ears **266** mate with the locking grooves **269**. When the locking ears **266** reach the bottom of the "J" of the locking grooves **269**, then the bowl fill valve **203** is rotated so that the locking ears **266** may be seated in the locking positions **279**.

The sealing ring **276** is seated against a portion of the bowl fill outlet port **206***b*. In one embodiment, this portion is a seating face **283** of the bowl fill outlet port **206***b*. Also, a portion of the bowl fill valve inlet port **213***b* is mated against the sealing ring **276**. In one embodiment, this portion of the bowl fill valve inlet port **213***b* is an end face **286** such that the sealing ring is clamped between the seating face **283** and the end face **286** when the bowl fill valve inlet port **213***b* is inserted fully into the bowl fill outlet port **206***b*. The clamping or compression of the sealing ring **276** pushes the locking ears **266** into the locking position **279** of the locking grooves **269** once the bowl fill valve **203** is rotated accordingly. In this respect, the compressive force of the sealing ring **276** helps keep the bowl fill valve inlet port **213***b* of the bowl fill valve **203** mated with the bowl fill outlet port **206***b*. Also, the sealing ring **276** forms a seal between the bowl fill outlet port **206***b* and the bowl fill valve inlet port **213***b* that prevents leakage of water from the coupling **263** between the bowl fill outlet port **206***b* and the bowl fill valve inlet port **213***b*.

The locking positions **279** of the locking grooves and the locking ears **266** are located such that when the bowl fill valve **203** is rotated thereby positioning the locking ears **266** in the locking positions **279**, the bowl fill valve **203** is substantially upright. In addition, the bowl fill outlet port **206***b* includes structural ribs **289** that provide greater structural stability for the bowl fill outlet port **206***b* and its attachment to the portion of the body **209** of the toilet fill valve **200** (FIG. **4**). Alternatively, the bowl fill outlet port **206***b* may be attached without the structural ribs **289**. In addition, it may be the case that the locking ears **266** extend inward from the side wall **273** of the bowl fill outlet port **206***b* and that the locking grooves **269** be situated within the side wall **271** of the bowl fill valve inlet port **213***b*.

Referring next to FIG. **7**, shown is a cutaway view of a coupling **303** between a third embodiment of the bowl fill outlet port **206**, denoted herein as bowl fill outlet port **206***c* and the bowl fill valve inlet port **213** denoted herein as bowl fill valve inlet port **213***c*. In this respect, the bowl fill outlet port **206***c* includes a first thread **306** disposed on a side wall **309** of the bowl fill outlet port **206***c*. A second thread **313** is disposed on a side wall of the bowl fill valve inlet port **213***c* that engages the first thread **306** disposed in the side wall of the bowl fill outlet port **206***c*. The bowl fill valve inlet port **213***c* is coupled to the bowl fill outlet port **206***c* by way of the first and second threads **306** and **313**. Specifically, the bowl fill valve **203** may be screwed onto the bowl fill outlet port **206***c* by virtue of the threads **306** and **313**. When the bowl fill valve inlet port **213***c* is screwed into the bowl fill valve outlet port **206***c*, a sealing ring **316** is clamped between portions of the bowl fill valve inlet port **213***c* and the bowl fill outlet port **206***c* such as a seating face **319** of the bowl fill outlet port **206***c* and an end face **323** of the bowl fill valve inlet port **213***c*. In this respect, a seal is formed between the bowl fill outlet port **206***c* and the bowl fill valve inlet port **213***c*. Alternatively, the threads **306** and **313** may be specified so as to form an adequate seal between the bowl fill valve outlet port **206***c* and

the bowl fill valve inlet port **213***c* for purposes of preventing leakage. As an additional alternative, the seating face **319** and the end face **323** or other portions of the bowl fill valve inlet port **213***c* and the bowl fill outlet port **206***c* may be compressed together to form a seal to prevent leakage. Alternatively, the bowl fill outlet port **206***c* and the bowl fill valve inlet port **213***c* may be designed to include mating surfaces that perform a friction seal as can be appreciated.

Referring next to FIG. **8***a*, shown is one embodiment of the bowl fill valve **203**, denoted herein as bowl fill valve **203***a* according to an embodiment of the present invention. The bowl fill valve **203***a* includes a handle **219***a* and a valve body **333**. The bowl fill valve **203***a* includes the bowl fill valve outlet port **216***a* and the bowl fill valve inlet port (not shown) the bowl fill outlet port **216***a* includes a nipple **223***a*.

Referring then to FIG. **8***b*, shown is a cutaway view of the bowl fill valve **203***a* according to an embodiment of the present invention. In this respect, the valve body **333** forms a cavity within which a valve **336** is inserted as shown. A line contact **339** is formed between surfaces of the valve body **333** and the valve **336** so as to both hold the valve **336** within the cavity that is formed by the valve body **333** and to form a seal between the valve body **333** and the valve **336** to prevent water leakage. As seen, the valve **336** is integrated with the handle **219***a* in a single piece construction, although multiple piece construction may be employed.

With reference to FIGS. **9***a* and **9***b*, shown is a second embodiment of the bowl fill valve **203**, denoted herein as bowl fill valve **203***b* according to an embodiment of the present invention. The bowl fill valve **203***b* includes a valve body **343** within which is inserted a valve **346**. The bowl fill valve **203***b* further comprises the bowl fill valve outlet port **216***b* and a bowl fill valve inlet port (not shown). The bowl fill valve outlet port **216***b* includes a nipple **223***b*. The bowl fill valve **203***b* further includes a handle **209***b* for manual adjustment of the bowl fill valve **203***b*.

Referring next to FIG. **9***b*, shown is a cutaway view of the bowl fill valve **203***b* according to an embodiment of the present invention. As shown, the valve **346** is inserted into the valve body **343**. A snap fit **349** affixes the valve **346** within the valve body **343**. A seal is formed by virtue of an interference fit **353** between a surface of the valve **346** and an inner surface of the valve body **343**. The bottom of the cavity within the valve **346** is closed by a cap **356** that may be spin welded onto the valve **346** after the valve is inserted into the valve body **343**.

In addition, referring back to FIG. **4**, other types of couplings may be employed between the bowl fill outlet port **206** the bowl fill valve inlet port **213**. For example, the bowl fill outlet port **206** the bowl fill valve inlet port **213** may be configured to facilitate a compression fitting there between. Also, other snap fit and sealing configurations may be employed beyond those specifically described herein.

Although the invention is shown and described with respect to certain embodiments, it is obvious that equivalents and modifications will occur to others skilled in the art upon the reading and understanding of the specification. The present invention includes all such equivalents and modifications, and is limited only by the scope of the claims.

What is claimed is:

1. A system, comprising:

a toilet fill valve that comprises:

a body comprising an extended portion, wherein the extended portion is integrally molded with the body, wherein the extended portion forms a bowl fill outlet port;

a water inlet configured to receive water from a water source; and

a tank water outlet configured to provide a first portion of the water to a toilet tank during at least a portion of a flush cycle;

a water flow regulator configured to attach directly to the extended portion of the body, wherein a portion of the water flow regulator is configured to insert into, and come into contact with, the extended portion of the body, wherein the water flow regulator is configured to receive a second portion of the water from the bowl fill outlet port during at least a portion of the flush cycle, wherein the water flow regulator is configured to constrict a flow rate of the second portion of the water that flows through the water flow regulator; and

a tube that is configured to attach directly to the water flow regulator, wherein the tube is configured to direct the second portion of the water from the water flow regulator directly to a toilet tank overflow tube.

2. The system of claim **1**, wherein the extended portion of the body extends radially from a longitudinal axis of the toilet fill valve.

3. The system of claim **1**, wherein the water flow regulator is configured to be clamped to the toilet fill valve.

4. The system of claim **1**, wherein the water flow regulator is configured to be snapped onto the toilet fill valve.

5. The system of claim **1**, wherein the toilet fill valve further comprises:

a float; and

an actuating arm coupled to the float, wherein the actuating arm extends radially relative to a longitudinal axis of the toilet fill valve, wherein the actuating arm is angularly offset relative to the bowl fill valve, thereby preventing an interference with the water flow regulator and a translational stem that extends from the float to a free end of the actuating arm.

6. The system of claim **1**, wherein the water flow regulator further comprises a nipple that is configured to insert into the tube.

7. The system of claim **1**, wherein the water flow regulator prevents a pressure head from being formed in the tube.

8. A method, comprising:

receiving, via a water inlet of a toilet fill valve, water from a water supply;

providing, via a tank water outlet of the toilet fill valve, a first portion of the water to a toilet tank;

providing, via a bowl fill outlet port of the toilet fill valve, a second portion of the water to a water flow regulator, wherein an extended portion of the toilet fill valve forms the bowl fill outlet port, wherein the extended portion is integrally molded with the toilet fill valve, wherein the water flow regulator is in contact with the extended portion of the toilet fill valve, wherein a portion of the water flow regulator inserts into the extended portion of the toilet fill valve and comes into contact with the extended portion of the toilet fill valve;

restricting, using the water flow regulator, a flow of the second portion of the water;

providing, via the water flow regulator, the second portion of the water to a tube that is in contact with the water flow regulator; and

providing, via the tube, the second portion of the water to a toilet tank overfill tube.

9. The method of claim **8**, wherein the water flow regulator prevents a pressure head from being formed in the tube.

10. The method of claim **8**, further comprising terminating, using the toilet fill valve, the flow of the second portion of the water so that a water level in a toilet bowl is at a predefined level.

11. The method of claim **10**, wherein the water level is determined at least in part by the water flow regulator.

12. The method of claim **8**, wherein the extended portion of the toilet fill valve is a portion of a body of the toilet fill valve.

13. The method of claim **8**, wherein the extended portion of the toilet fill valve extends radially from a longitudinal axis of the toilet fill valve.

14. A method, comprising:

inserting a portion of a water flow regulator into an extended portion of a body of a toilet fill valve, the portion of the water flow regulator coming into contact with the extended portion of the body of the toilet fill valve, wherein the extended portion is integrally molded with the body, wherein the extended portion forms a bowl fill outlet port, wherein the water flow regulator is configured to constrict a flow rate of water that flows out of the bowl fill outlet port; and

attaching a tube directly to the water flow regulator, wherein the tube is configured to direct the water from the water flow regulator directly to a toilet tank overflow tube.

15. The method of claim **14**, further comprising preventing the water flow regulator from detaching from the extended portion of the body.

16. The method of claim **15**, wherein preventing the water flow regulator from detaching from the extended portion further comprises clamping the water flow regulator to the extended portion.

17. The method of claim **15**, wherein preventing the water flow regulator from detaching from the extended portion further comprises snapping the bowl fill restriction to the extended portion.

18. The method of claim **15**, wherein preventing the water flow regulator from detaching from the extended portion further comprises rotating the water flow regulator relative to the extended portion.

19. The system of claim **1**, wherein the water flow regulator comprises an adjustable water flow regulator that is configured to adjust the flow rate of the second portion of the water based at least in part on a setting of the adjustable water flow regulator.

20. The method of claim **14**, wherein the water flow regulator comprises an adjustable water flow regulator that is configured to adjust the flow rate of the water based at least in part on a setting of the adjustable water flow regulator.

* * * * *

EXHIBIT B

Danco's '105 Patent

Fluidmaster, Inc. - EX1003, Page 035
IPR2024-00633 (Fluidmaster Inc v. Danco Inc)

US009103105B1

(12) **United States Patent**
Schuster et al.

(10) **Patent No.: US 9,103,105 B1**
(45) **Date of Patent: *Aug. 11, 2015**

(54) **TOILET FILL VALVE**

(71) Applicant: **Danco, Inc.**, Irving, TX (US)

(72) Inventors: **Michael J. Schuster**, Shorewood, IL (US); **Larry Schneider**, Wadsworth, IL (US)

(73) Assignee: **Danco, Inc.**, Irving, TX (US)

(*) Notice: Subject to any disclaimer, the term of this patent is extended or adjusted under 35 U.S.C. 154(b) by 0 days.

This patent is subject to a terminal disclaimer.

(21) Appl. No.: **14/457,697**

(22) Filed: **Aug. 12, 2014**

Related U.S. Application Data

(63) Continuation of application No. 14/164,424, filed on Jan. 27, 2014, which is a continuation of application No. 13/346,355, filed on Jan. 9, 2012, now Pat. No. 8,650,671, which is a continuation of application No. 12/786,904, filed on May 25, 2010, now Pat. No. 8,104,105, which is a continuation of application No. 10/958,797, filed on Oct. 5, 2004, now Pat. No. 7,743,436, which is a continuation-in-part of application No. 10/798,606, filed on Mar. 11, 2004, now Pat. No. 6,823,889.

(51) **Int. Cl.**
E03D 1/00 (2006.01)
E03D 1/32 (2006.01)
E03D 1/14 (2006.01)

(52) **U.S. Cl.**
CPC . ***E03D 1/32*** (2013.01); ***E03D 1/141*** (2013.01)

(58) **Field of Classification Search**
CPC E03D 1/32
USPC 4/331, 324, 366, 415, 675; 285/91; 137/15.26, 432, 434, 436, 437, 137/441–444
See application file for complete search history.

(56) **References Cited**

U.S. PATENT DOCUMENTS

136,128	A	2/1873	Bralley
994,746	A	6/1911	Dwyer et al.
996,743	A	7/1911	Yancey
1,113,057	A	10/1914	Schumann
1,787,601	A	1/1931	Swanberg
2,087,503	A	7/1937	Clemmons
2,465,866	A	3/1949	Gaines
2,512,176	A	6/1950	Shaffer
2,736,037	A	2/1956	Hardie
2,791,235	A	5/1957	Smith

(Continued)

OTHER PUBLICATIONS

US Patent 6,823,889, File History, 2004-2005 Great-Great-Grandparent Patent to this Application.

(Continued)

Primary Examiner — Tuan N Nguyen
(74) *Attorney, Agent, or Firm* — Thomas I Horstemeyer, LLP.

(57) **ABSTRACT**

In various embodiments, a water inlet of a toilet fill valve receives water from a water supply. A tank water outlet of the toilet fill valve provides a first portion of the water to a toilet tank. A bowl fill outlet port of the toilet fill valve provides a second portion of the water to a bowl fill restriction that is in direct contact with an extended portion of the toilet fill valve. The bowl fill restriction restricts the flow of the second portion of the water. The bowl fill restriction provides the second portion of the water to a tube that is in direct contact with the bowl fill restriction. The tube provides the second portion of the water to a toilet tank overfill tube.

24 Claims, 9 Drawing Sheets

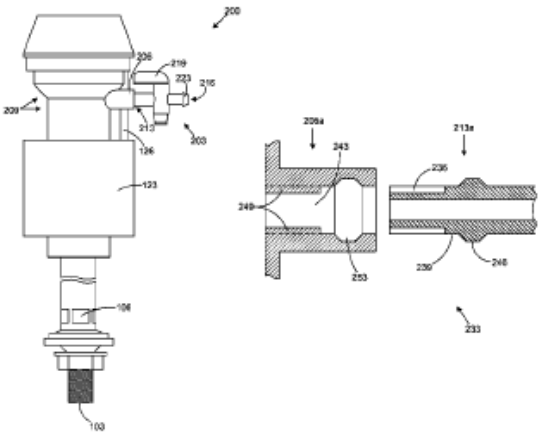

(56) **References Cited**

U.S. PATENT DOCUMENTS

2,799,865	A	7/1957	Schuster
3,040,769	A	6/1962	Lamb
3,086,546	A	4/1963	Brown
3,172,128	A	3/1965	Ducey
3,321,972	A	5/1967	Goldtrap
3,457,947	A	7/1969	Fitzgerald
3,744,064	A	7/1973	Preston
3,762,395	A	10/1973	Taylor
3,986,216	A	10/1976	Davis et al.
3,994,628	A	11/1976	Kemper
4,007,498	A	2/1977	Pearson
4,017,916	A	4/1977	Pearson
4,032,822	A	6/1977	Un
4,090,532	A	5/1978	Story, Jr.
4,134,164	A	1/1979	Sanmartin Rial
4,145,775	A	3/1979	Butler
4,351,071	A	9/1982	Clar
4,392,260	A	7/1983	Bensen
4,420,845	A	12/1983	Antunez
4,505,231	A	3/1985	Syler
4,527,295	A	7/1985	Lacore
4,700,413	A	10/1987	Lopez
4,707,867	A	11/1987	Kawabe et al.
4,764,996	A	8/1988	Pino
4,770,388	A	9/1988	Carman
4,793,588	A	12/1988	Laverty, Jr.
4,898,124	A	2/1990	Granberg et al.
4,918,764	A	4/1990	Haselswerdt et al.
4,980,932	A	1/1991	Stemples
5,007,452	A	4/1991	Antunez
5,036,553	A	8/1991	Sanderson
5,052,060	A	10/1991	Makita et al.
5,083,323	A	1/1992	Cannan
5,134,729	A	8/1992	Shaw
5,228,152	A	7/1993	Fraley
5,232,011	A	8/1993	Royalty
5,245,710	A	9/1993	Haselswerdt et al.
5,327,931	A	7/1994	Royalty
5,362,026	A	11/1994	Kobayashi et al.
5,432,959	A	7/1995	Ellsworth et al.
5,442,820	A	8/1995	Becker
5,469,586	A	11/1995	Tsutsui et al.
5,542,448	A	8/1996	Campbell et al.
5,624,073	A	4/1997	Mueller et al.
5,708,991	A	1/1998	DeMarco
5,715,860	A	2/1998	Horad
5,742,951	A	4/1998	Wright et al.
5,775,366	A	7/1998	Ray
5,794,279	A	8/1998	Schwartz
5,862,537	A	1/1999	Osmond
5,926,868	A	7/1999	Bjerke
6,047,725	A	4/2000	Gish et al.
6,202,227	B1	3/2001	Gurowitz
6,209,576	B1	4/2001	Davis
6,219,856	B1	4/2001	Alles
6,263,519	B1	7/2001	Parsons et al.
6,295,660	B1	10/2001	Schuster
6,385,788	B1	5/2002	Wasielewski
6,409,221	B1	6/2002	Robinson et al.
6,560,790	B2	5/2003	Saar et al.
6,823,889	B1	11/2004	Schuster
2002/0092090	A1	7/2002	Johnson
2002/0162166	A1	11/2002	Saar et al.
2004/0199989	A1 *	10/2004	Trolio 4/427

OTHER PUBLICATIONS

US Patent 7,743,436, File History, 2004-2010 Great-Grandparent Patent to this Application.

US Patent 8,104,105, File History, (2010-2012) Grandparent to this Application.

U.S. Appl. No. 13/346,355 File History (2012-2014) Parent to this Application.

* cited by examiner

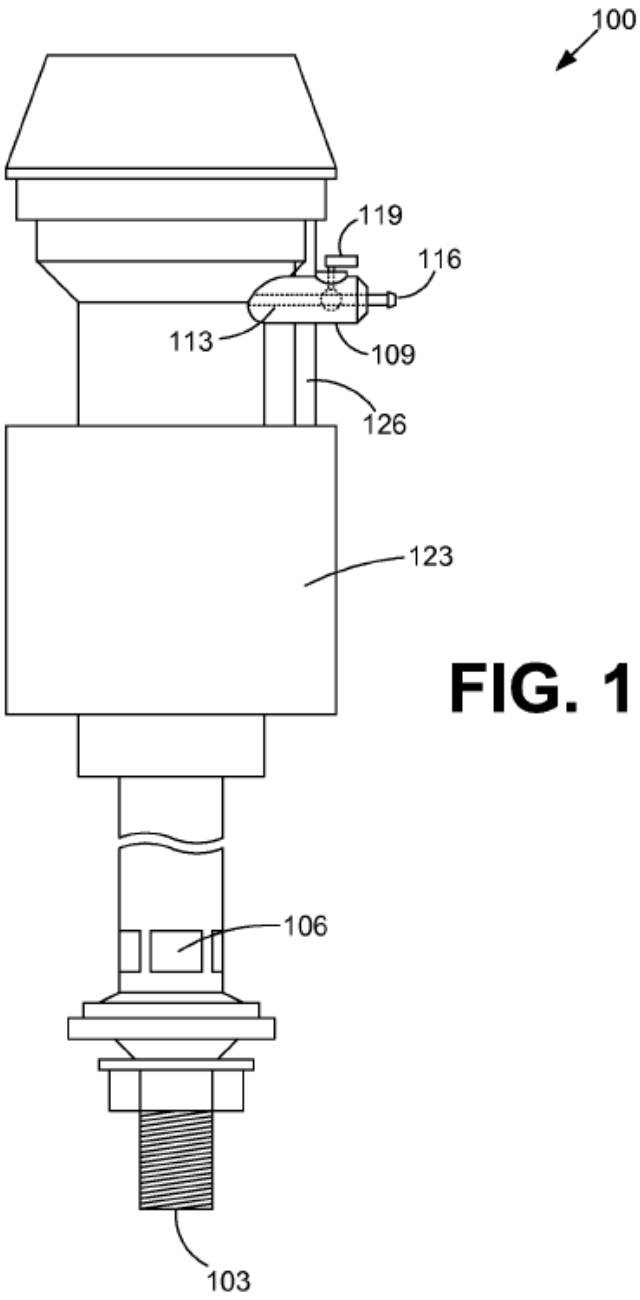

FIG. 1

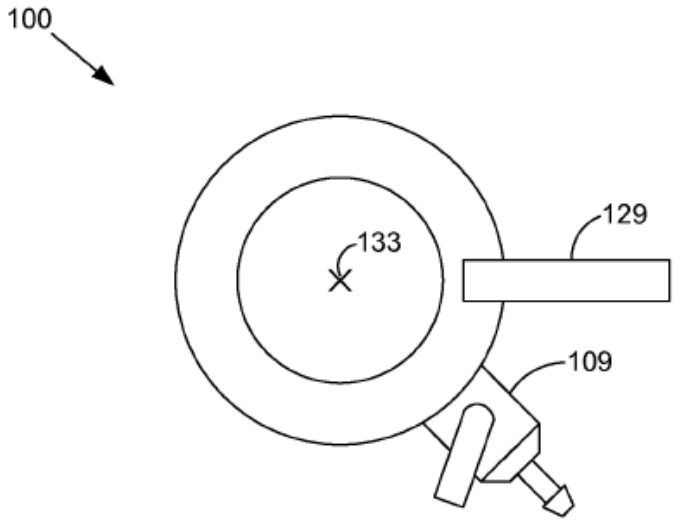

FIG. 2

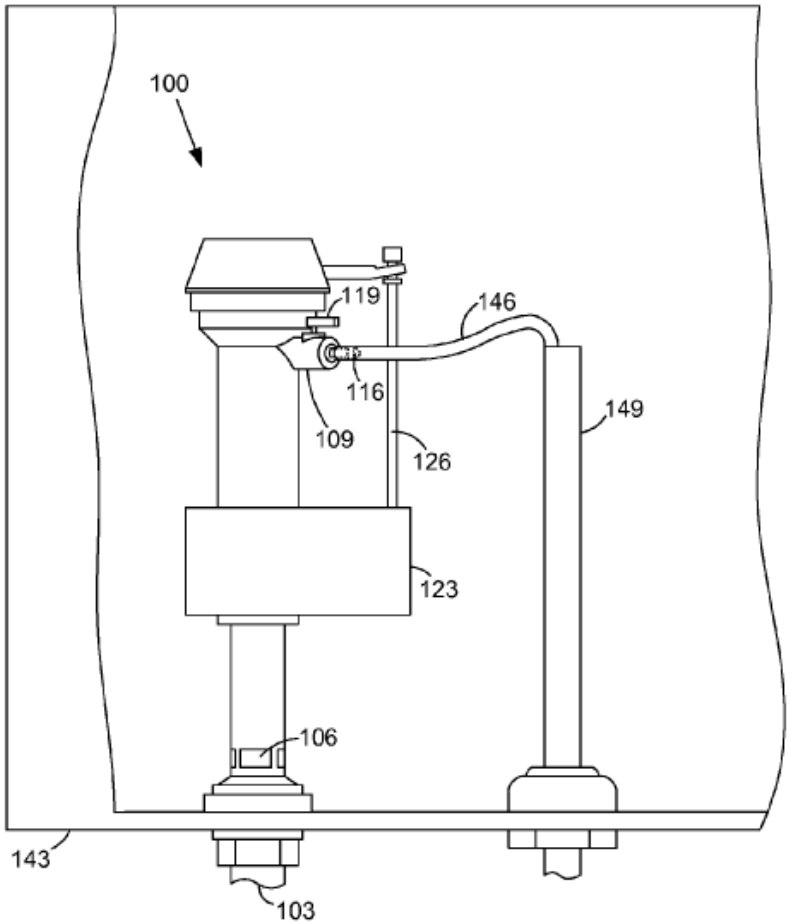

FIG. 3

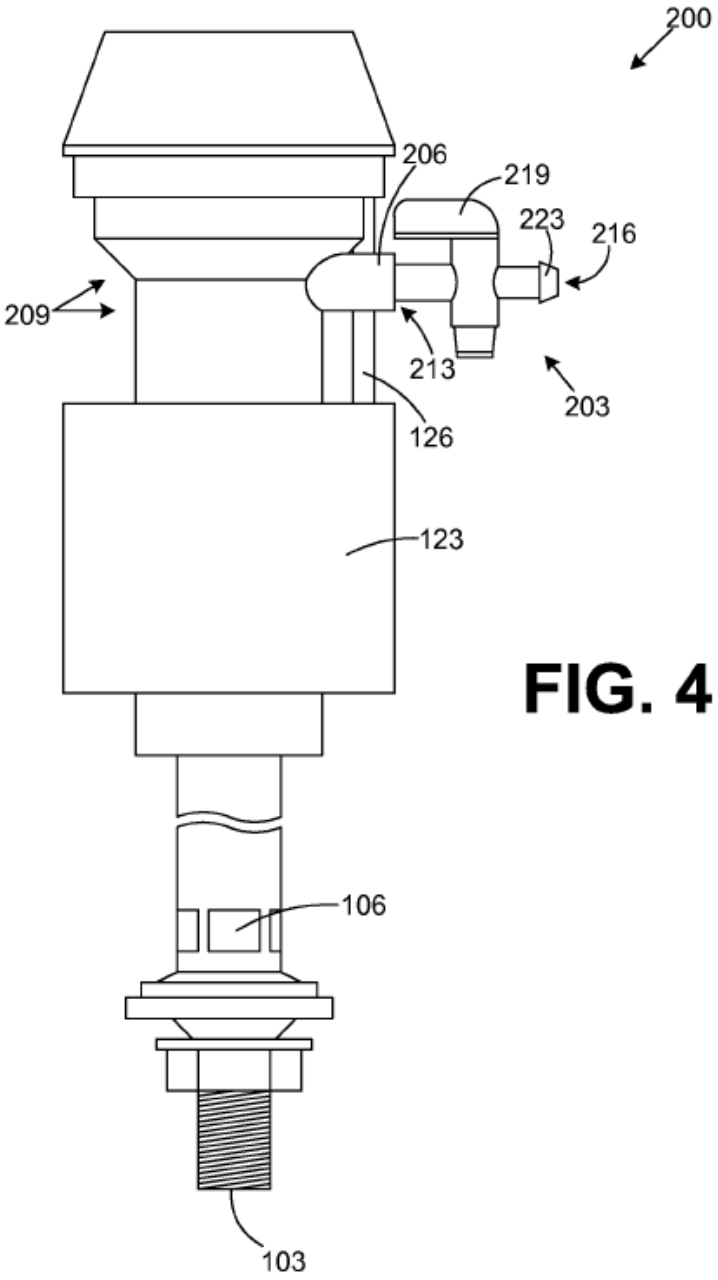

FIG. 4

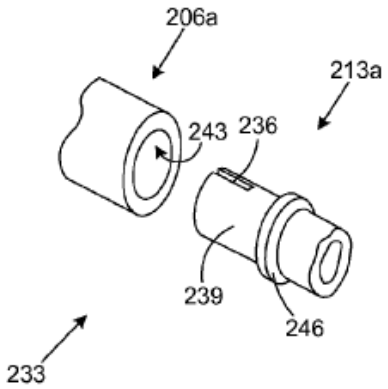
206a
213a
243
236
239
246
233

FIG. 5A

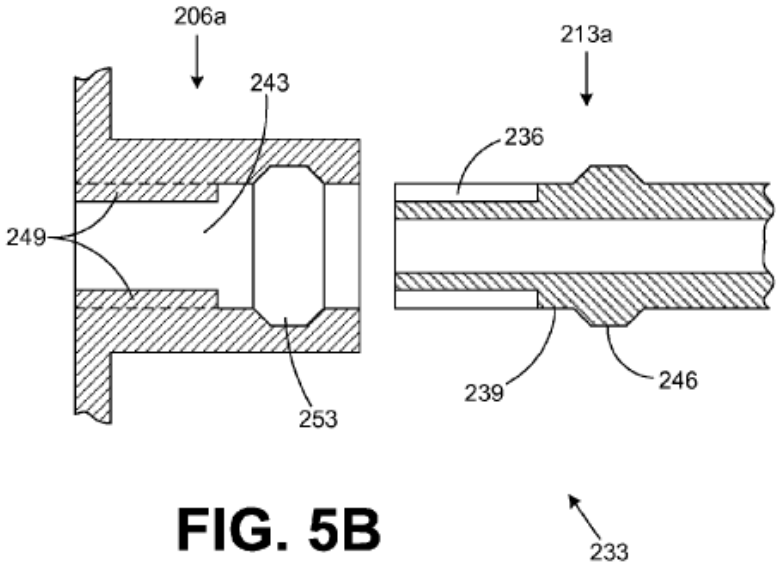
206a
243
213a
236
249
239
246
253
233

FIG. 5B

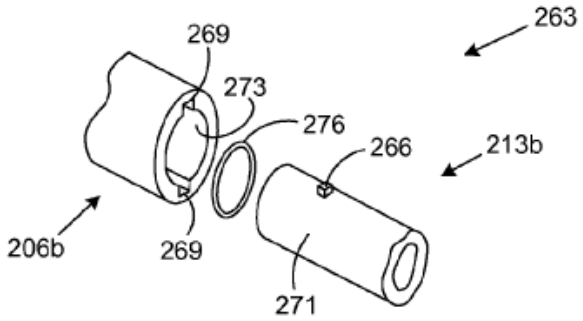

FIG. 6A

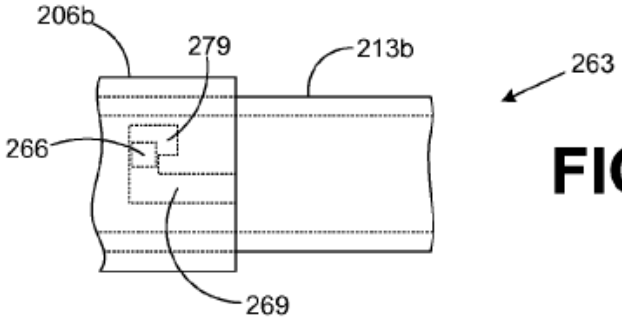

FIG. 6B

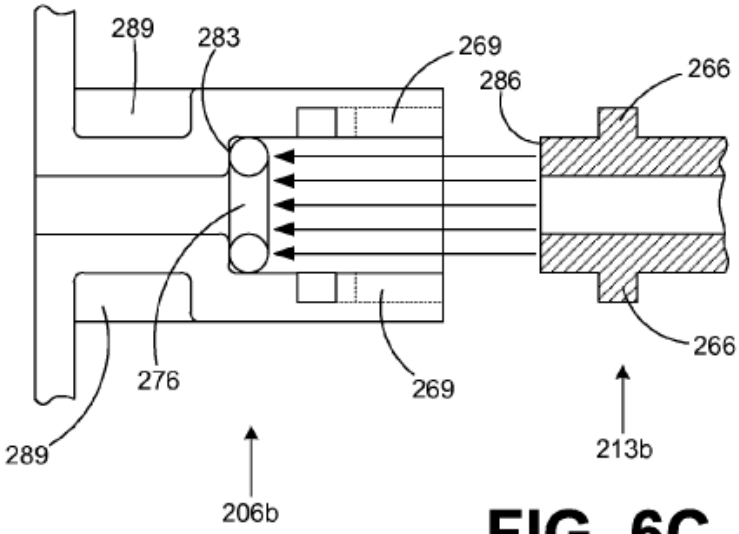

FIG. 6C

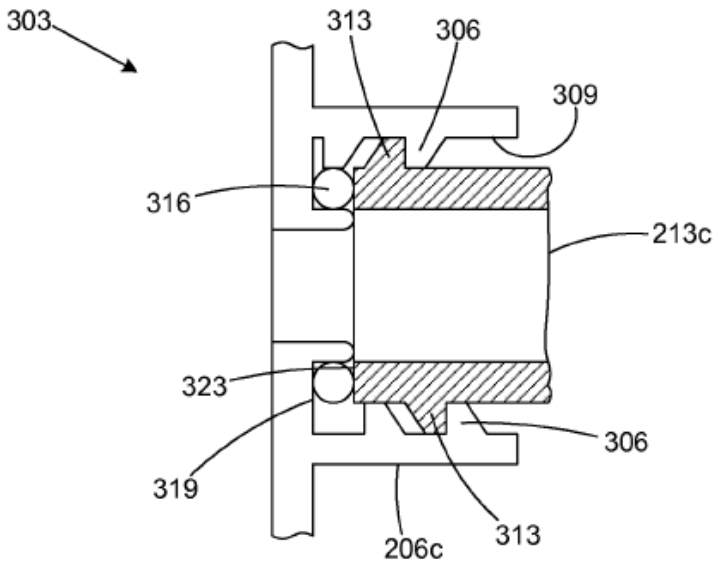

FIG. 7

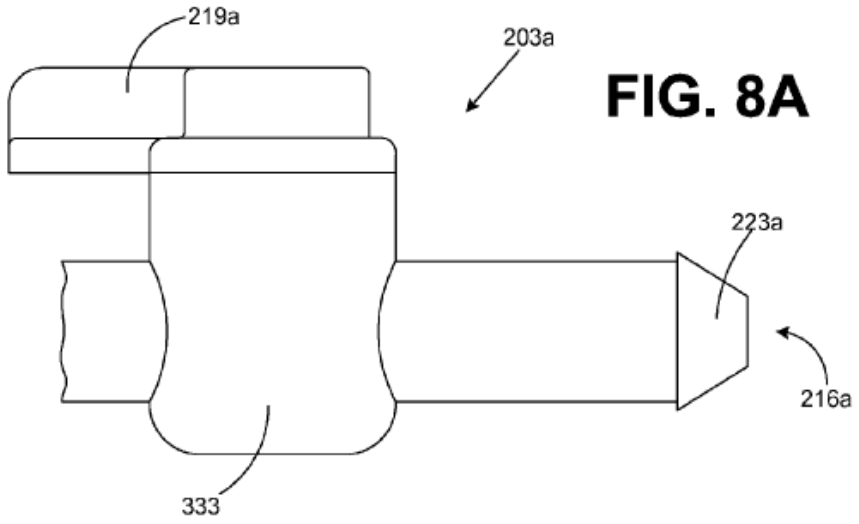

FIG. 8A

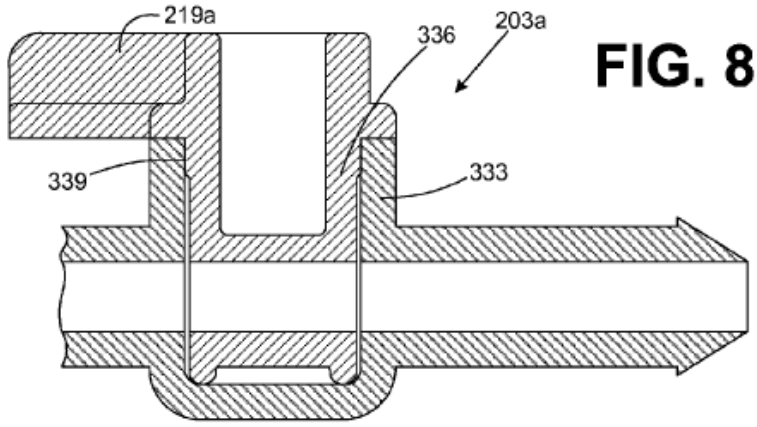

FIG. 8B

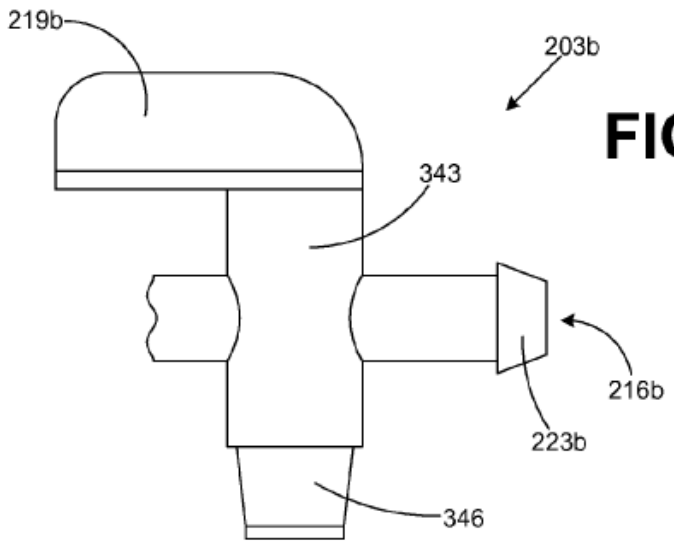

FIG. 9A

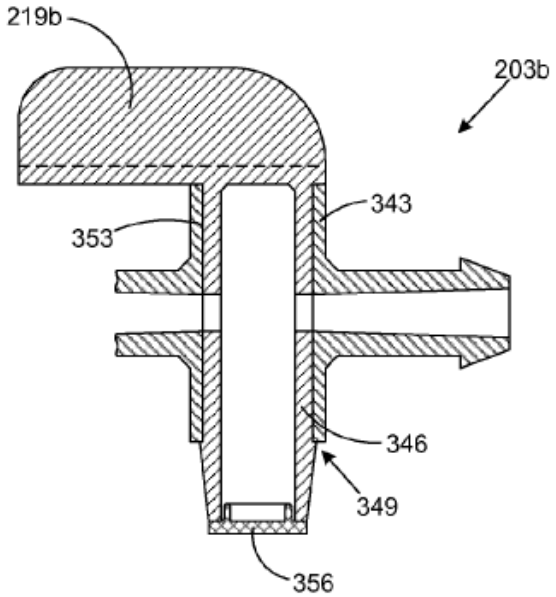

FIG. 9B

TOILET FILL VALVE

CROSS REFERENCE TO RELATED APPLICATIONS

The present patent application is a Continuation Application of, and claims priority to, U.S. Patent Application entitled "Toilet Fill Valve" filed on Jan. 27, 2014 and assigned Ser. No. 14/164,424, which is a Continuation Application of, and claims priority to, U.S. Pat. No. 8,650,671 entitled "Toilet Fill Valve with Adjustable Bowl Fill Flow" filed on Jan. 9, 2012, which is a Continuation Application of, and claims priority to, U.S. Pat. No. 8,104,105 entitled "Toilet Fill Valve with Adjustable Bowl Fill Flow" filed on May 25, 2010, which is a Continuation Application of, and claims priority to, U.S. Pat. No. 7,743,436 entitled "Toilet Fill Valve with Adjustable Bowl Fill Flow" filed on Oct. 5, 2004, which is a Continuation-in-Part Application of, and claims priority to, U.S. Pat. No. 6,823,889 entitled "Toilet Fill Valve with Adjustable Bowl Fill Flow" filed on Mar. 11, 2004.

BACKGROUND

A toilet fill valve in a toilet typically includes a water outlet that provides water for refilling a toilet bowl during a flush cycle. Unfortunately, the water flowing out of such conventional water outlets to fill a toilet bowl provide much more water than is necessary to fill the average toilet bowl. Consequently, much of the water that flows into a toilet bowl during the average flush cycle is lost down the drain. This translates into a loss of millions of gallons of water each year.

BRIEF DESCRIPTION OF THE SEVERAL VIEWS OF THE DRAWINGS

The invention can be understood with reference to the following drawings. The components in the drawings are not necessarily to scale. Also, in the drawings, like reference numerals designate corresponding parts throughout the several views.

FIG. **1** is a drawing of a side view of a toilet fill valve according to an embodiment of the present invention;

FIG. **2** is a drawing of a top view of the toilet fill valve of FIG. **1**;

FIG. **3** is a drawing of a cutaway view of a toilet tank within which the toilet fill valve of FIG. **1** is installed;

FIG. **4** is a drawing of a side view of a toilet fill valve according to an embodiment of the present invention;

FIGS. **5**A and **5**B are drawings that illustrate one example of a coupling of a bowl fill valve to the toilet fill valve of FIG. **4** according to an embodiment of the present invention;

FIGS. **6**A, **6**B, and **6**C are drawings that illustrate another example of a coupling of a bowl fill valve to the toilet fill valve of FIG. **4** according to an embodiment of the present invention;

FIG. **7** is a drawing that illustrates still another example of a coupling of a bowl fill valve to the toilet fill valve of FIG. **4** according to an embodiment of the present invention;

FIGS. **8**A and **8**B are drawings that illustrate an example of a bowl fill valve that is coupled to the toilet fill valve of FIG. **4** according to an embodiment of the present invention; and

FIGS. **9**A and **9**B are drawings that illustrate another example of a bowl fill valve that is coupled to the toilet fill valve of FIG. **4** according to an embodiment of the present invention.

DETAILED DESCRIPTION

With reference to FIG. **1**, shown is a toilet fill valve **100** according to an embodiment of the present invention. The

toilet fill valve **100** includes a water inlet **103** at the bottom of the toilet fill valve **100** that is configured to be coupled to a water source outside of a toilet tank within which the toilet fill valve **100** is installed. The toilet fill valve **100** includes one or more water outlets **106** that are configured to supply water into a toilet tank within which the toilet fill valve **100** is installed. The toilet fill valve **100** may be, for example, a pilot style fill valve. However, it is understood that the toilet fill valve **100** may be any style of fill valve such as, for example, a ballcock valve, etc. The toilet fill valve **100** also includes a bowl fill valve **109** according to an embodiment of the present invention. The bowl fill valve **109** includes a bowl fill valve inlet **113** and a bowl fill valve outlet **116**. In addition, the bowl fill valve **109** includes a handle **119** that facilitates a manual adjustment of the bowl fill valve **109**.

The bowl fill valve **109** is integral with the toilet fill valve **100**. In this respect, the term "integral" refers to the fact that the bowl fill valve **109** and the toilet fill valve **100** comprise a single structure. In this respect, the bowl fill valve **109** may be included within the body of the toilet fill valve **100** as a portion of the toilet fill valve **100** in a single piece construction. Specifically, the bowl fill valve **109** may be molded as a portion of the toilet fill valve **100** or it may be snapped or clamped into place, or it may be attached to the toilet fill valve **100** in some other manner, etc.

Within the toilet fill valve **100**, the bowl fill valve inlet **113** is operatively coupled to the water inlet **103**. In this respect, when the toilet fill valve **100** is open and water flows from the water inlet **103** to the water outlets **106** and into a toilet tank, an amount of water is also supplied to the bowl fill valve inlet **113** that flows through the bowl fill valve **109** and out the bowl fill valve outlet **116**. By virtue of the manual setting of the handle **119** of the bowl fill valve **109**, the flow of water through the bowl fill valve **109** is regulated. In this manner, the flow of water is regulated so that enough water flows out of the bowl fill valve **109** to fill a toilet bowl without wasting any water down a drain.

Thus, the bowl fill valve **109** is configured to supply an adjustable flow of water out of the bowl fill outlet **116** that is directed to a toilet bowl during a flush cycle of a toilet to fill the toilet bowl. The flow of water is adjusted so that just enough flows out of bowl fill valve **109** so as to fill the toilet bowl without wasting any water.

The toilet fill valve **100** includes a float **123** that is operatively coupled to an actuating arm (not shown) by a translating stem **126**. The float **123** floats on the water within a toilet tank and, depending on the location of the float **123** along the toilet fill valve **100**, the toilet fill valve **100** is open or closed as can be appreciated by those with ordinary skill in the art. The bowl fill valve **109** and the actuating arm (not shown) are each located on the toilet fill valve **100** so as to prevent any interference between the bowl fill valve **109** and the translational stem **126** or the actuating arm as will be discussed.

According to an embodiment of the present invention, the bowl fill valve **109** may include a number of biased positions. In this respect, the movement of the handle **119** may cause the bowl fill valve **109** to move from one predefined biased position to other predefined biased positions. In this respect, various mechanisms such as tabs, snaps, or other position biasing structures may be employed. The biased positions of the bowl fill valve **109** help ensure that the bowl fill valve **109** remains in a given setting selected by a user by a manual manipulation of the handle **119** during the normal course of operation of the toilet fill valve **100**. Thus, by virtue of the biased positions, the bowl fill valve **109** is prevented from moving out of a desired

position set by a user over a long period of use due to vibration and other factors as can be appreciated by those with ordinary skill in the art.

The bowl fill valve **109** may be, for example, a ball valve, a gate valve, a globe valve, a plug valve, a diaphragm valve, a butterfly valve, a needle valve, a sliding gate, a quick turn valve, a knife valve or any other appropriate type of valve as can be appreciated by those with ordinary skill in the art.

To operate the toilet fill valve **100**, the toilet fill valve **100** is first installed within a toilet tank. When a toilet is flushed and the tank is drained, the float **123** moves downward along the toilet fill valve **100** and, consequently, the toilet fill valve **100** opens to allow water to flow from the water inlet **103** and out the water outlets **106** into a toilet tank. At the same time, water flows into the bowl fill valve inlet **113** and out the bowl fill valve outlet **116** through the bowl fill valve **109**. Based on the setting of the handle **119**, the bowl fill valve **109** determines the precise flow rate of the water that flows out the bowl fill valve outlet **116**. A tube is typically employed to direct the water flowing out the bowl fill valve outlet **116** to an overflow tube in the toilet tank. In this respect, the water flowing out the bowl fill valve outlet **116** refills the toilet bowl of the respective toilet.

Referring next to FIG. **2**, shown is a top view of the toilet fill valve **100** according to an embodiment of the present invention. In this respect, the actuating arm **129** of the bowl fill valve **100** is seen with respect to the bowl fill valve **109**. The actuating arm **129** is coupled to the float by way of the translational stem **126** (FIG. **1**). In this respect, the actuating arm **129** extends in an orthogonal direction relative to a longitudinal axis **133** of the toilet fill valve **100**. The longitudinal axis **133** is centered in the toilet fill valve **100** along the length of the toilet fill valve **100**. Also, the bowl fill valve **109** extends in an orthogonal direction relative to the longitudinal axis **133** of the toilet fill valve **100**. In order to prevent interference between the bowl fill valve **109** and the translational stem **126** or the actuating arm **129**, the actuating arm **129** is angularly offset relative to the bowl fill valve **109** as shown. In this respect, the translational stem **126** is coupled to the free end of the actuating arm **129**. By virtue of the angular offset between the bowl fill valve **109** and the actuating arm **129**, the operation of the bowl fill valve **109** does not interfere with the operation of the toilet fill valve **100** itself by virtue of the fact that the float **123** (FIG. **1**) can move freely with the movement of the translational stem **126** in order for proper operation of the toilet fill valve **100**.

With reference to FIG. **3**, shown is the toilet fill valve **100** as installed within a toilet tank **143** according to an embodiment of the present invention. In this respect, the toilet fill valve **100** includes the water inlet **103** that is coupled to a water source outside of the toilet tank **143**. The toilet fill valve **100** also includes one or more water outlets **106** that direct a flow of water into the toilet tank **143** during the operation of a flush cycle. The bowl fill valve **109** includes the bowl fill valve inlet (not shown) and the bowl fill valve outlet **116**, where the bowl fill valve inlet is operatively coupled to the water inlet **103** as described above. Also, the bowl fill valve **109** is integrated with the body of the toilet fill valve **100** as described above.

A tube **146** is coupled to the bowl fill valve outlet **116** and is directed into the overflow tube **149** of the toilet tank **143**. The tube **146** directs water that flows out of the bowl fill valve outlet **116** into the overflow tube **149** and refills the toilet bowl associated with the toilet tank **143** as can be appreciated by those with ordinary skill in the art. The bowl fill valve **109** is configured to supply the adjustable flow of water out the bowl fill valve outlet through the tube **146** and into the overflow tube **149** for filling the toilet bowl during the flush cycle of the toilet. In this respect, no pressure is seen within the tube **146**. Specifically, the fact that the bowl fill valve **109** is integral with the toilet fill valve **100** prevents the creation of a pressure head in the tube **146** as would be the case if the bowl fill valve **109** were included in the middle of the tube **146**. The fact that a pressure head is not created in any portion of the tube **146** prevents the tube **146** from working its way off of the bowl fill valve outlet **116** over time.

When installed, the bowl fill valve **109** is calibrated for the particular flush cycle of the toilet within which the toilet fill valve **100** is installed. To calibrate the bowl fill valve **109**, a user first determines the water level in the toilet bowl when the toilet bowl is full of water. This gives the user a starting and an ending point for determining when the toilet bowl of the respective toilet is full. Next, the bowl fill valve handle **109** is adjusted so that the bowl fill valve **109** is placed in a predefined position that allows a predefined flow of water to refill the toilet bowl. In this manner, one adjusts the actual flow of water that refills the toilet bowl. Thereafter, the user flushes the toilet itself. Next, the user determines if the flow of water into the toilet bowl by virtue of the adjustments made to the bowl fill valve **109** is adequate to refill the toilet bowl during the flush cycle. This may be determined, by identifying whether the level of the water in the toilet bowl reaches the full level determined at the beginning of the bowl fill valve calibration above.

The flow of water from the bowl fill valve **109** should be set so as to ensure that the water level in the toilet bowl reaches the full level at about the same time that the flush cycle ends. In other words, the level of water in the toilet bowl should reach its highest level at the same time that the flush cycle ends. This prevents any water from being lost down the drain associated with the toilet.

If the amount of water that flows into the toilet bowl is inadequate to refill the toilet bowl during the flush cycle as described above, then one should repeat the steps of adjusting the bowl fill valve, flushing the toilet, and then once again determining if the flow of water into the toilet bowl is adequate to refill the toilet bowl during a flush cycle.

Ultimately, during use of the toilet that includes the toilet fill valve **100** and the toilet tank **143**, a user flushes the toilet and a predetermined flow of water exits the bowl fill valve outlet **116** and is directed into the toilet bowl. After the toilet tank has drained during the flush cycle, a flapper closes in the toilet tank and the toilet tank refills. During the refilling of the tank, the water supplied by the bowl fill valve **109** fills the toilet bowl itself. The amount of water supplied by the bowl fill valve in the time it takes to refill the toilet tank should be approximately equal to the amount of water needed to fill the toilet bowl. By virtue of the fact that the bowl fill valve **100** is integrated within the toilet fill valve **100**, a pressure head is prevented from being created due to any potential pinching of the tube **146** or other similar adjustment mechanism.

With reference to FIG. **4**, shown is a toilet fill valve **200** according to another embodiment of the present invention. The toilet fill valve **200** includes the same water inlet **103** and the water outlets **106** as the toilet fill valve **100** (FIG. **1**). The toilet fill valve **200** also includes the float **123** and the translational stem **126** as was described with reference to the toilet fill valve **100**. In addition, the toilet fill valve **200** includes a bowl fill valve **203** that is integral with the toilet fill valve **200** as will be described. As stated above, the term "integral" refers to the fact that the bowl fill valve **200** and the toilet fill valve **100** comprise a single structure. In this embodiment, the

bowl fill valve **200** is a separate component that is attached the body of the toilet fill valve **100**, thereby forming the integral, single structure.

The toilet fill valve **200** also includes a bowl fill outlet port **206** that radially extends from a portion of a body **209** of the toilet fill valve **200**. In this respect, the bowl fill outlet port is operatively coupled to the water inlet **103**. In particular, when the toilet fill valve **200** is in an "on" state, water that flows in the water inlet **103** flows out of both the water outlets **106** and the bowl fill outlet port **206**. The water flowing out of the bowl fill outlet port **206** flows through the bowl fill valve **203** as will be described.

The bowl fill valve **203** includes a bowl fill valve inlet port **213** and a bowl fill valve outlet port **216**. The bowl fill valve inlet port **213** is compatible with the bowl fill outlet port **206**, where the bowl fill valve inlet port **213** is coupled to the bowl fill outlet port **206** when the bowl fill valve **203** is coupled or affixed to the toilet fill valve **200**. The bowl fill valve inlet port **213** is compatible with the bowl fill outlet port **206** in the sense that both the bowl fill valve inlet port **213** and the bowl fill outlet port **206** comprise various structures that couple together when the bowl fill valve **203** is connected to the bowl fill outlet port **206** as will be described. In particular, various embodiments of the coupling between the bowl fill valve inlet port **213** and the bowl fill outlet port **206** are described herein.

The bowl fill valve **203** also includes a handle that may be adjusted by hand to adjust a flow of water through the bowl fill valve **203** during a flush operation of a toilet in which the toilet fill valve **200** is installed. Typically, the handle **219** is initially adjusted to a desired position when the toilet fill valve **200** is installed and generally remains in such position for the continued operation of the toilet fill valve **200**. During the life cycle of the bowl fill valve **203**, it may be possible that the bowl fill valve **203** is adjusted to take into account various changes in the operation of the toilet fill valve **200** such as, for example, changes in pressure or other operational changes.

The bowl fill valve **203** also includes a nipple **223**. The nipple **223** is adapted to mate with a tube that extends from the bowl fill valve outlet port **216** to the overfill tube **149** (FIG. **3**) in a manner similar to that as shown in FIG. **3** with respect to the tube **146** (FIG. **3**) that extends from the nipple **116** (FIG. **3**) to the overflow tube **149** (FIG. **3**). The bowl fill valve **203** extends beyond the bowl fill outlet port **206** in a radial direction with respect to the portion of the body **209** of the toilet fill valve **200**.

In some embodiments, the bowl fill outlet port **206** may comprise a female receptacle and, correspondingly, the bowl fill valve inlet port **213** may comprise a male end compatible with the female receptacle. Alternatively, the bowl fill valve inlet port **213** may comprise a female receptacle and the bowl fill outlet port **206** may comprise a male end compatible with such female receptacle.

The toilet fill valve **200** further includes an actuating arm (not shown) that extends in a radial direction that is orthogonal relative to a longitudinal axis of the toilet fill valve **200** in a manner similar as that described with reference to the toilet fill valve **100** (FIG. **1**). The longitudinal axis is defined as an axis that runs from the water inlet **103** through the body **209** of the toilet fill valve **200** and out the top of the toilet fill valve **200**. In one embodiment, the bowl fill valve **203** extends radially in an orthogonal direction relative to such longitudinal axis of the toilet fill valve **200**. Also, in one embodiment, the actuating arm is angularly offset relative to the bowl fill valve **203** to prevent interference between the bowl fill valve **203** and the translational stem **126** that extends from the float **123** to a free end of the actuating arm. This allows the float **123** to move up and down and to engage the actuating arm during the normal operation of the toilet fill valve **200** during various flush cycles.

In addition, the bowl fill valve **203** may be constructed with a number of biased positions that help prevent the bowl fill valve **203** from moving out of adjustment over time when the force of pressure develops therein. Also, the biased positions aid a user in actual adjustment of the bowl fill valve **203** as can be appreciated.

The toilet fill valve **200** provides an advantage in that the body **209** of the toilet fill valve **200** may be constructed with the bowl fill outlet port **206** using a molding process that is much less complex than attempting to mold the entire bowl fill valve **203** within the structure of the body **209** as a single molded construction as was described with reference to one embodiment of the toilet fill valve **100**. In this regard, the bowl fill valve **203** may be constructed as a separate component to the body **209** of the toilet fill valve **200** and assembled for distribution to end users.

Due to the fact that the bowl fill valve **203** is affixed to the toilet fill valve **200** through the coupling of the bowl fill outlet port **206** with the bowl fill valve inlet port **213**, then a pressure head that develops within the bowl fill valve **203** due to the adjustment of the handle **219** during operation of the toilet fill valve **200** will not cause the bowl fill valve **203** to fall off of the toilet fill valve **200**. Thus, when the toilet fill valve **200** is installed in a toilet tank **143**, a user may adjust the opening of the bowl fill valve **203** by adjusting the handle **219** until a desired flow of water flows out of the bowl fill valve outlet port **216** into a tube and into the overflow tube **149** of a toilet. This flow of water is typically established to refill a toilet bowl of a toilet. In this regard, the flow of the water into the overflow tube **149** that refills the toilet bowl during a toilet flush operation may be regulated or adjusted so as to minimize or eliminate the amount of water that is lost down the drain of a toilet due to over filling of the toilet bowl during a flush cycle of a toilet. In one embodiment, the bowl fill valve **203** is adjusted until the filling of the toilet bowl of the toilet coincides with the end of the flush cycle, thereby resulting in little or no loss of water.

Referring next to FIG. **5**A, shown is a coupling **233** between one embodiment of the bowl fill outlet port **206**, denoted herein as bowl fill outlet port **206***a*, and an embodiment of the bowl fill valve inlet port **213**, denote herein as bowl fill valve inlet port **213***a*. The bowl fill valve inlet port **213***a* includes a slot **236** in a side wall **239**. The bowl fill outlet port **206***a* comprises a rib (not shown) that extends from a side wall **243** that is inserted into the slot **236** when the bowl fill inlet port **213***a* is inserted into the bowl fill outlet port **206***a*. The mating of the slot **236** with the rib prevents the rotation of the bowl fill valve **213***a* with respect to the bowl fill outlet port **206***a* when the bowl fill valve inlet port **213***a* is inserted into the bowl fill outlet port **206***a*. Alternatively, there may be a number of slots **236** in the side wall **239** of the bowl fill valve inlet port **213***a* and a corresponding number of ribs extending from the side wall **243** of the bowl fill outlet port **206***a*.

The bowl fill valve inlet port **213***a* also includes an annular protrusion **246** that extends from the side wall **239** of the bowl fill valve inlet port **213***a*. Correspondingly, an annular groove (not shown) in the side wall **243** of the bowl fill valve outlet port **206***a* is provided that mates up with the annular protrusion **246** when the bowl fill valve inlet port **213** is inserted into the bowl fill outlet port **206***a*. In this respect, the annular protrusion **246** is snap fit into the annular groove (not shown), thereby affixing the bowl fill valve **203***a* to the bowl fill valve outlet port **206***a*.

Turning then to FIG. **5**B, shown is a cutaway view of the coupling **233** between the bowl fill outlet port **206***a* and the bowl fill valve inlet port **213***a* according to an embodiment of the present invention. In this respect, the bowl fill outlet port **206***a* is depicted with two ribs **249** extending from the side wall **243** within the bowl fill outlet port **206***a*. Also, the bowl fill outlet port **206***a* includes the annular groove **253** into which the annular protrusion **246** snaps when the bowl fill valve inlet port **213***a* is inserted into the bowl fill outlet port **206***a*. In this respect, the mating of the annular protrusion **246** with the annular groove **253** fixes the bowl fill valve **203** to the bowl fill outlet port **206***a*. In this respect, the bowl fill valve **203** becomes an integral portion of the toilet fill valve **200**.

Also, the fit between the annular protrusion **246** is a snug fit that forms a seal between the bowl fill outlet port **206***a* and the bowl fill valve inlet port **213***a* that prevents the leakage of water from the coupling **233** during a flush cycle. Alternatively, a snug fit may occur between other mating surfaces of the bowl fill outlet port **206***a* and the bowl fill valve inlet port **213***a* that prevents leakage of water from the coupling **233**.

With reference to FIGS. **5**A and **5**B, even though the slots **236** are depicted as being formed within the side wall **239** of the bowl fill valve inlet port **213** and the ribs **249** extend from the side wall **243** within the bowl fill outlet port **206**, it is possible that this arrangement may be reversed where the slots **236** are formed in the side wall **243** of the bowl fill outlet port **206***a* and the ribs **249** extend from the side wall **239** of the bowl fill valve inlet port **213***a*. In addition, the annular groove **253** may be created in the side wall **239** of the bowl fill valve inlet port **213** and the annular projection **246** may extend inward from the side wall **243** within the bowl fill outlet port **206** in a reverse arrangement than that shown with reference to FIG. **5**B.

Referring next to FIGS. **6**A, **6**B, and **6**C, shown is a coupling **263** between another embodiment of the bowl fill outlet port **206**, denoted herein as bowl fill outlet port **206***b*, and another embodiment of the bowl fill valve inlet port **213**, denoted herein as bowl fill valve inlet port **213***b*. The bowl fill valve inlet port **213***b* includes at least two locking ears **266** that mate with corresponding locking grooves **269** in the bowl fill outlet port **206***b*. In particular, the locking ears **266** extend from a side wall **271** of the bowl fill valve inlet port **213***b*. The locking grooves **269** are disposed in the side wall **273** of the bowl fill outlet port **206***b*. When the bowl fill valve **203** is inserted and twisted into the bowl fill outlet port **206***b*, each of the locking ears **266** is situated in a locking position of one of the locking grooves **269** as will be described. The coupling **263** further comprises a sealing ring **276** that may be, for example, a rubber O-ring or other type of sealing ring. The sealing ring **276** is compressed between an end of the bowl fill valve inlet port **213***b* and a seat within the bowl fill outlet port **206***b* as we described. While at least two locking ears **266** and corresponding locking grooves **269** are shown, it is possible that a design may be employed that comprises a single locking ear **266** and a single corresponding locking groove **269**.

With reference to FIG. **6**B, shown is a portion of the bowl fill valve inlet port **213***b* and the bowl fill outlet port **206***b* as the bowl fill valve inlet port **213***b* is inserted into the bowl fill outlet port **206***b* and is partially rotated such that the locking ears **266** are almost located in the locking positions **279**. In this respect, each of the locking grooves **269** is a "J" formation. The J formation of the locking grooves **269** allows the locking ears **266** to slide down and around the partial loop of the J and seat in the locking position **279** such that the sealing ring **276** exerts a force against the end of the bowl fill valve inlet port **213***b*, thereby pushing the locking ears **266** into the locking positions **279** of the locking grooves **269** and holding the locking ears **266** in place. This ensures that the bowl fill valve **203** remains coupled to the bowl fill outlet port **206***b*.

With reference to FIG. **6**C, shown is a cutaway view of the coupling **263** between the bowl fill outlet port **206***b* and the bowl fill valve inlet port **213***b*. In this respect, the bowl fill valve inlet port **213***b* is inserted into the bowl fill outlet port **206***b* in a manner such that the locking ears **266** mate with the locking grooves **269**. When the locking ears **266** reach the bottom of the "J" of the locking grooves **269**, then the bowl fill valve **203** is rotated so that the locking ears **266** may be seated in the locking positions **279**.

The sealing ring **276** is seated against a portion of the bowl fill outlet port **206***b*. In one embodiment, this portion is a seating face **283** of the bowl fill outlet port **206***b*. Also, a portion of the bowl fill valve inlet port **213***b* is mated against the sealing ring **276**. In one embodiment, this portion of the bowl fill valve inlet port **213***b* is an end face **286** such that the sealing ring is clamped between the seating face **283** and the end face **286** when the bowl fill valve inlet port **213***b* is inserted fully into the bowl fill outlet port **206***b*. The clamping or compression of the sealing ring **276** pushes the locking ears **266** into the locking position **279** of the locking grooves **269** once the bowl fill valve **203** is rotated accordingly. In this respect, the compressive force of the sealing ring **276** helps keep the bowl fill valve inlet port **213***b* of the bowl fill valve **203** mated with the bowl fill outlet port **206***b*. Also, the sealing ring **276** forms a seal between the bowl fill outlet port **206***b* and the bowl fill valve inlet port **213***b* that prevents leakage of water from the coupling **263** between the bowl fill outlet port **206***b* and the bowl fill valve inlet port **213***b*.

The locking positions **279** of the locking grooves and the locking ears **266** are located such that when the bowl fill valve **203** is rotated thereby positioning the locking ears **266** in the locking positions **279**, the bowl fill valve **203** is substantially upright. In addition, the bowl fill outlet port **206***b* includes structural ribs **289** that provide greater structural stability for the bowl fill outlet port **206***b* and its attachment to the portion of the body **209** of the toilet fill valve **200** (FIG. **4**). Alternatively, the bowl fill outlet port **206***b* may be attached without the structural ribs **289**. In addition, it may be the case that the locking ears **266** extend inward from the side wall **273** of the bowl fill outlet port **206***b* and that the locking grooves **269** be situated within the side wall **271** of the bowl fill valve inlet port **213***b*.

Referring next to FIG. **7**, shown is a cutaway view of a coupling **303** between a third embodiment of the bowl fill outlet port **206**, denoted herein as bowl fill outlet port **206***c* and the bowl fill valve inlet port **213** denoted herein as bowl fill valve inlet port **213***c*. In this respect, the bowl fill outlet port **206***c* includes a first thread **306** disposed on a side wall **309** of the bowl fill outlet port **206***c*. A second thread **313** is disposed on a side wall of the bowl fill valve inlet port **213***c* that engages the first thread **306** disposed in the side wall of the bowl fill outlet port **206***c*. The bowl fill valve inlet port **213***c* is coupled to the bowl fill outlet port **206***c* by way of the first and second threads **306** and **313**. Specifically, the bowl fill valve **203** may be screwed onto the bowl fill outlet port **206***c* by virtue of the threads **306** and **313**. When the bowl fill valve inlet port **213***c* is screwed into the bowl fill valve outlet port **206***c*, a sealing ring **316** is clamped between portions of the bowl fill valve inlet port **213***c* and the bowl fill outlet port **206***c* such as a seating face **319** of the bowl fill outlet port **206***c* and an end face **323** of the bowl fill valve inlet port **213***c*. In this respect, a seal is formed between the bowl fill outlet port **206***c* and the bowl fill valve inlet port **213***c*. Alternatively, the threads **306** and **313** may be specified so as to form an adequate seal between the bowl fill valve outlet port **206***c* and

the bowl fill valve inlet port **213***c* for purposes of preventing leakage. As an additional alternative, the seating face **319** and the end face **323** or other portions of the bowl fill valve inlet port **213***c* and the bowl fill outlet port **206***c* may be compressed together to form a seal to prevent leakage. Alternatively, the bowl fill outlet port **206***c* and the bowl fill valve inlet port **213***c* may be designed to include mating surfaces that perform a friction seal as can be appreciated.

Referring next to FIG. **8***a*, shown is one embodiment of the bowl fill valve **203**, denoted herein as bowl fill valve **203***a* according to an embodiment of the present invention. The bowl fill valve **203***a* includes a handle **219***a* and a valve body **333**. The bowl fill valve **203***a* includes the bowl fill valve outlet port **216***a* and the bowl fill valve inlet port (not shown) the bowl fill outlet port **216***a* includes a nipple **223***a*.

Referring then to FIG. **8***b*, shown is a cutaway view of the bowl fill valve **203***a* according to an embodiment of the present invention. In this respect, the valve body **333** forms a cavity within which a valve **336** is inserted as shown. A line contact **339** is formed between surfaces of the valve body **333** and the valve **336** so as to both hold the valve **336** within the cavity that is formed by the valve body **333** and to form a seal between the valve body **333** and the valve **336** to prevent water leakage. As seen, the valve **336** is integrated with the handle **219***a* in a single piece construction, although multiple piece construction may be employed.

With reference to FIGS. **9***a* and **9***b*, shown is a second embodiment of the bowl fill valve **203**, denoted herein as bowl fill valve **203***b* according to an embodiment of the present invention. The bowl fill valve **203***b* includes a valve body **343** within which is inserted a valve **346**. The bowl fill valve **203***b* further comprises the bowl fill valve outlet port **216***b* and a bowl fill valve inlet port (not shown). The bowl fill valve outlet port **216***b* includes a nipple **223***b*. The bowl fill valve **203***b* further includes a handle **209***b* for manual adjustment of the bowl fill valve **203***b*.

Referring next to FIG. **9***b*, shown is a cutaway view of the bowl fill valve **203***b* according to an embodiment of the present invention. As shown, the valve **346** is inserted into the valve body **343**. A snap fit **349** affixes the valve **346** within the valve body **343**. A seal is formed by virtue of an interference fit **353** between a surface of the valve **346** and an inner surface of the valve body **343**. The bottom of the cavity within the valve **346** is closed by a cap **356** that may be spin welded onto the valve **346** after the valve is inserted into the valve body **343**.

In addition, referring back to FIG. **4**, other types of couplings may be employed between the bowl fill outlet port **206** the bowl fill valve inlet port **213**. For example, the bowl fill outlet port **206** the bowl fill valve inlet port **213** may be configured to facilitate a compression fitting there between. Also, other snap fit and sealing configurations may be employed beyond those specifically described herein.

Although the invention is shown and described with respect to certain embodiments, it is obvious that equivalents and modifications will occur to others skilled in the art upon the reading and understanding of the specification. The present invention includes all such equivalents and modifications, and is limited only by the scope of the claims.

What is claimed is:

1. A system, comprising:

a toilet fill valve that comprises:

a body comprising an extended portion, wherein the extended portion is integrally molded with the body, wherein the extended portion forms a bowl fill outlet port;

a water inlet configured to receive water from a water source; and

a tank water outlet configured to provide a first portion of the water to a toilet tank during at least a portion of a flush cycle;

a bowl fill restriction configured to attach directly to the extended portion of the body, wherein the bowl fill restriction comprises a protrusion that is configured to insert into a recess in the toilet fill valve to lock the bowl fill restriction to the extended portion of the body, wherein the bowl fill restriction is configured to receive a second portion of the water from the bowl fill outlet port during at least a portion of the flush cycle, wherein the restriction is configured to constrict a flow rate of the second portion of the water that flows through the bowl fill restriction; and

a tube that is configured to attach directly to the bowl fill restriction, wherein the tube is configured to direct the second portion of the water from the bowl fill restriction directly to a toilet tank overflow tube.

2. The system of claim **1**, wherein the extended portion of the body extends radially from a longitudinal axis of the toilet fill valve.

3. The system of claim **1**, wherein a portion of the bowl fill restriction is configured to insert into the extended portion of the body.

4. The system of claim **1**, wherein the bowl fill restriction is configured to be clamped to the extended portion of the body.

5. The system of claim **1**, wherein the bowl fill restriction is configured to be snapped onto the extended portion of the body.

6. The system of claim **1**, wherein the toilet fill valve further comprises:

a float; and

an actuating arm coupled to the float, wherein the actuating arm extends radially relative to a longitudinal axis of the toilet fill valve, wherein the actuating arm is angularly offset relative to the bowl fill valve, thereby preventing an interference with the bowl fill restriction and a translational stem that extends from the float to a free end of the actuating arm.

7. The system of claim **1**, wherein the bowl fill restriction further comprises a nipple that is configured to insert into the tube.

8. The system of claim **1**, wherein the bowl fill restriction being attached directly to the extended portion of the body prevents a pressure head from being formed in the tube.

9. A method, comprising:

receiving, via a water inlet of a toilet fill valve, water from a water supply;

providing, via a tank water outlet of the toilet fill valve, a first portion of the water to a toilet tank;

providing, via a bowl fill outlet port of the toilet fill valve, a second portion of the water to a bowl fill restriction, wherein an extended portion of the toilet fill valve forms the bowl fill outlet port, wherein the extended portion is integrally molded with the toilet fill valve, wherein the bowl fill restriction is in direct contact with the extended portion of the toilet fill valve, wherein the bowl fill restriction is constructed as a single piece, wherein the bowl fill restriction causes a flow of the second portion of the water to be constricted;

providing, via the bowl fill restriction, the second portion of the water to a tube that is in direct contact with the bowl fill restriction; and

providing, via the tube, the second portion of the water to a toilet tank overfill tube.

10. The method of claim **9**, wherein the bowl fill restriction being in direct contact with the extended portion of the toilet fill valve prevents a pressure head from being formed in the tube.

11. The method of claim **9**, further comprising terminating, using the toilet fill valve, the flow of the second portion of the water so that a water level in a toilet bowl is at a predefined level.

12. The method of claim **11**, wherein the water level is determined at least in part by the bowl fill restriction.

13. The method of claim **9**, wherein the extended portion of the toilet fill valve is a portion of a body of the toilet fill valve.

14. The method of claim **9**, wherein the extended portion of the toilet fill valve extends radially from a longitudinal axis of the toilet fill valve.

15. A method, comprising:

attaching a bowl fill restriction directly to an extended portion of a body of a toilet fill valve, wherein the extended portion is integrally molded with the body, wherein the extended portion forms a bowl fill outlet port, wherein the bowl fill restriction is configured to constrict a flow rate of water that flows out of the bowl fill outlet port;

inserting a protrusion of the bowl fill restriction into a recess in the toilet fill valve to lock the bowl fill restriction to the extended portion of the body; and

attaching a tube directly to the bowl fill restriction, wherein the tube is configured to direct the water from the bowl fill restriction directly to a toilet tank overflow tube.

16. The method of claim **15**, further comprising preventing the bowl fill restriction from detaching from the extended portion of the body.

17. The method of claim **16**, wherein preventing the bowl fill restriction from detaching from the extended portion further comprises clamping the bowl fill restriction to the extended portion.

18. The method of claim **16**, wherein preventing the bowl fill restriction from detaching from the extended portion further comprises snapping the bowl fill restriction to the extended portion.

19. The method of claim **16**, wherein preventing the bowl fill restriction from detaching from the extended portion further comprises rotating the bowl fill restriction with respect to the extended portion.

20. The method of claim **15**, wherein attaching a bowl fill restriction directly to the extended portion of the body of the toilet fill valve further comprises inserting a portion of the bowl fill restriction into the extended portion of the body.

21. The system of claim **1**, wherein the bowl fill restriction is constructed of a single piece.

22. The method of claim **9**, wherein the bowl fill restriction comprises a protrusion that is configured to insert into a recess in the toilet fill valve to lock the bowl fill restriction to the extended portion of the toilet fill valve.

23. The method of claim **15**, wherein the bowl fill restriction is constructed of a single piece.

24. A system, comprising:

a toilet fill valve that comprises:

a body comprising an extended portion that forms a bowl fill outlet port, wherein the extended portion is integrally molded with the body;

a water inlet configured to receive water from a water source; and

a tank water outlet configured to provide a first portion of the water to a toilet tank during at least a portion of a flush cycle;

a bowl fill restriction configured to attach directly to the extended portion of the body of the toilet fill valve, wherein the bowl fill restriction comprises means for locking the bowl fill restriction to the extended portion of the body of the toilet fill valve, wherein the bowl fill restriction is configured to receive a second portion of the water from the bowl fill outlet port during at least a portion of the flush cycle, wherein the restriction is configured to constrict a flow rate of the second portion of the water that flows through the bowl fill restriction; and

a tube configured to attach directly to the bowl fill restriction, wherein the tube is configured to direct the second portion of the water from the bowl fill restriction to a toilet tank overflow tube.

* * * * *

EXHIBIT C

Danco's '698 Patent

Fluidmaster, Inc. - EX1003, Page 053
IPR2024-00633 (Fluidmaster Inc v. Danco Inc)

US010934698B1

(12) **United States Patent**
Schuster et al.

(10) **Patent No.: US 10,934,698 B1**
(45) **Date of Patent: *Mar. 2, 2021**

(54) **TOILET VALVE**

(71) Applicant: **Danco, Inc.**, Irving, TX (US)

(72) Inventors: **Michael J. Schuster**, Shorewood, IL (US); **Larry Schneider**, Wadsworth, IL (US)

(73) Assignee: **Danco, Inc.**, Irving, TX (US)

(*) Notice: Subject to any disclaimer, the term of this patent is extended or adjusted under 35 U.S.C. 154(b) by 0 days.

This patent is subject to a terminal disclaimer.

(21) Appl. No.: **16/686,328**

(22) Filed: **Nov. 18, 2019**

Related U.S. Application Data

(63) Continuation of application No. 14/856,901, filed on Sep. 17, 2015, now Pat. No. 10,519,639, which is a continuation of application No. 14/164,424, filed on Jan. 27, 2014, now Pat. No. 9,139,993, which is a continuation of application No. 13/346,355, filed on Jan. 9, 2012, now Pat. No. 8,650,671, which is a continuation of application No. 12/786,904, filed on May 25, 2010, now Pat. No. 8,104,105, which is a continuation of application No. 10/958,797, filed on Oct. 5, 2004, now Pat. No. 7,743,436, which is a continuation-in-part of application No. 10/798,606, filed on Mar. 11, 2004, now Pat. No. 6,823,889.

(51) **Int. Cl.**

E03D 1/00	(2006.01)
E03D 1/34	(2006.01)
B23P 15/00	(2006.01)

(52) **U.S. Cl.**
CPC ***E03D 1/34*** (2013.01); ***B23P 15/001*** (2013.01)

(58) **Field of Classification Search**
CPC E03D 1/34; B23P 15/001
USPC 4/383, 418
See application file for complete search history.

(56) **References Cited**

U.S. PATENT DOCUMENTS

136,128	A	2/1873	Bralley
994,746	A	6/1911	Haynes
996,743	A	7/1911	Yancey
1,113,057	A	10/1914	Schumann
1,787,601	A	1/1931	Swanberg
2,087,503	A	7/1937	Clemmons

(Continued)

OTHER PUBLICATIONS

U.S. Pat. No. 6,823,889, File History (2004-2005) Great-Great-Great-Great Grandparent Patent to this Application.

(Continued)

Primary Examiner — Tuan N Nguyen
(74) *Attorney, Agent, or Firm* — Thomas Horstemeyer, LLP

(57) **ABSTRACT**

According to various embodiments, a toilet system includes a toilet fill valve and a bowl fill valve that is configured to attach directly to the toilet fill valve. The toilet fill valve can include a body having an extended portion that forms a bowl fill outlet port, a water inlet configured to couple to a water source, and a tank water outlet configured to output water to a toilet tank. The bowl fill valve can include a bowl fill valve inlet port that is configured to mate directly to the bowl fill outlet port of the body of the toilet fill valve, a bowl fill valve outlet port, a protrusion configured to insert into a recess of the toilet fill valve and retain the bowl fill valve to the toilet fill valve, a slot that is configured to receive an extension of the toilet fill valve, and a water flow adjustment handle.

14 Claims, 9 Drawing Sheets

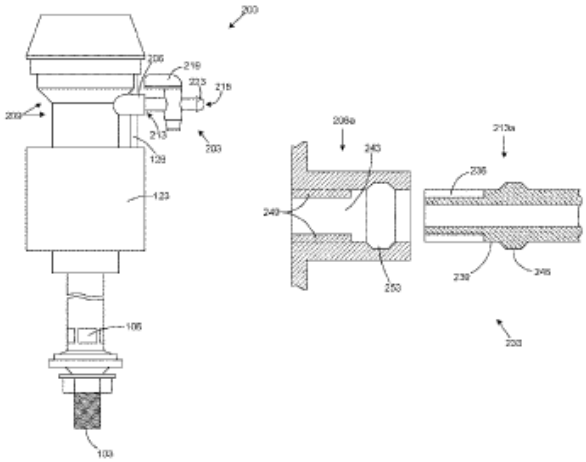

(56) **References Cited**

U.S. PATENT DOCUMENTS

2,465,866	A	3/1949	Gaines	
2,512,176	A	6/1950	Shaffer	
2,736,037	A	2/1956	Hardie	
2,791,235	A	5/1957	Smith	
2,799,865	A	7/1957	Dufault	
3,040,769	A	6/1962	Lamb	
3,086,217	A *	4/1963	Barlow	E03D 1/286 4/367
3,086,546	A	4/1963	Brown	
3,172,128	A	3/1965	Ducey	
3,321,972	A	5/1967	Goldtrap	
3,457,947	A	7/1969	Fitzgerald	
3,744,064	A	7/1973	Preston	
3,762,395	A	10/1973	Taylor	
3,782,686	A	1/1974	Cowie	
3,986,216	A	10/1976	Davis et al.	
3,994,628	A	11/1976	Kemper	
4,007,498	A	2/1977	Pearson	
4,017,916	A	4/1977	Pearson	
4,032,822	A	6/1977	Un	
4,090,532	A	5/1978	Story, Jr.	
4,100,928	A *	7/1978	Schoepe	F16K 31/34 137/15.18
4,134,164	A	1/1979	Sanmartin Rial	
4,145,775	A	3/1979	Butler	
4,351,071	A	9/1982	Clar	
4,392,260	A	7/1983	Bensen	
4,420,845	A	12/1983	Antunez	
4,505,231	A	3/1985	Syler	
4,527,295	A	7/1985	Lacore	
4,700,413	A	10/1987	Lopez	
4,707,567	A	11/1987	Kawabe et al.	
4,764,996	A	8/1988	Pino	
4,770,388	A	9/1988	Carman	
4,793,588	A	12/1988	Laverty, Jr.	
4,898,124	A	2/1990	Granberg et al.	
4,918,764	A	4/1990	Haselswerdt et al.	
4,980,932	A	1/1991	Stemples	
5,007,452	A	4/1991	Antunez	
5,036,553	A	8/1991	Sanderson	
5,052,060	A	10/1991	Makita et al.	
5,083,323	A	1/1992	Cannan	
5,123,628	A	6/1992	Yu	
5,134,729	A	8/1992	Shaw	
5,228,152	A	7/1993	Fraley	
5,232,011	A	8/1993	Royalty	
5,245,710	A	9/1993	Haselswerdt et al.	
5,327,931	A	7/1994	Royalty et al.	
5,362,026	A	11/1994	Kobayashi et al.	
5,432,959	A	7/1995	Ellsworth et al.	
5,442,820	A	8/1995	Becker	
5,469,586	A	11/1995	Tsutsui et al.	
5,542,448	A	8/1996	Campbell et al.	
5,624,073	A	4/1997	Mueller et al.	
5,708,991	A	1/1998	DeMarco	
5,715,860	A	2/1998	Horad	
5,742,951	A	4/1998	Wright et al.	
5,775,366	A	7/1998	Ray et al.	
5,794,279	A	8/1998	Schwartz	
5,862,637	A	1/1999	Osmond	
5,926,868	A	7/1999	Bjerke	
6,047,725	A	4/2000	Gish et al.	
6,202,227	B1	3/2001	Gurowitz	
6,209,576	B1	4/2001	Davis	
6,263,519	B1	7/2001	Parsons et al.	
6,295,660	B1	10/2001	Schuster	
6,219,856	B1	11/2001	Alles	
6,385,788	B1	5/2002	Wasielewski	
6,409,221	B1	6/2002	Robinson et al.	
6,560,790	B2	5/2003	Saar et al.	
6,823,889	B1	11/2004	Schuster	
7,743,436	B1	6/2010	Schuster et al.	
8,104,105	B1	1/2012	Schuster et al.	
8,650,671	B1	2/2014	Schuster et al.	
9,103,105	B1	8/2015	Schuster et al.	
9,139,993	B1	9/2015	Schuster et al.	
10,519,639	B1 *	12/2019	Schuster	E03D 1/34
2002/0092090	A1	7/2002	Johnson	
2002/0162166	A1	11/2002	Saar et al.	
2004/0199989	A1	10/2004	Trolio	

OTHER PUBLICATIONS

U.S. Pat. No. 7,743,436, File History (2004-2010) Great-Great-Great-Grandparent Patent to this Application.
U.S. Pat. No. 8,104,105, File History (2010-2012) Great-Great-Grandparent to this Application.
U.S. Pat. No. 8,650,671 File History (2012-2014) Great-Grandparent to this Application.
U.S. Pat. No. 9,139,993 File History (2014-2015) Grandparent to this Application.
U.S. Pat. No. 9,103,105 File History (2014-2015) Sibling of the Grandparent to this Application.
U.S. Appl. No. 14/856,901 File History (2015-2019) Parent to this Application.

* cited by examiner

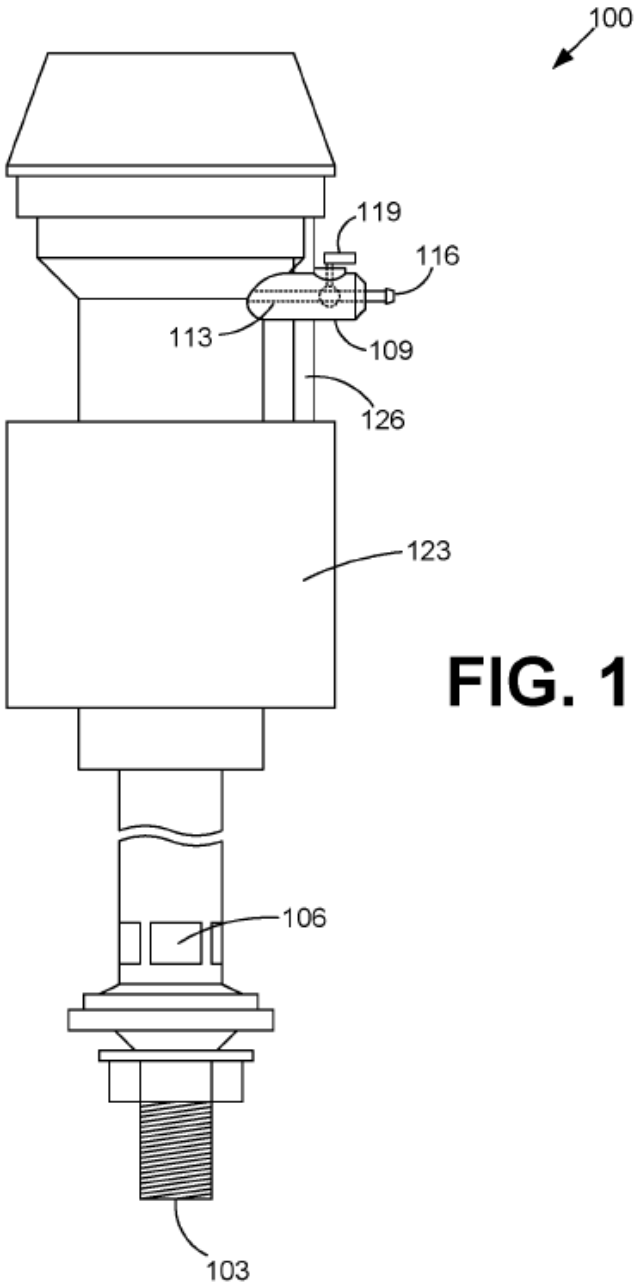

FIG. 1

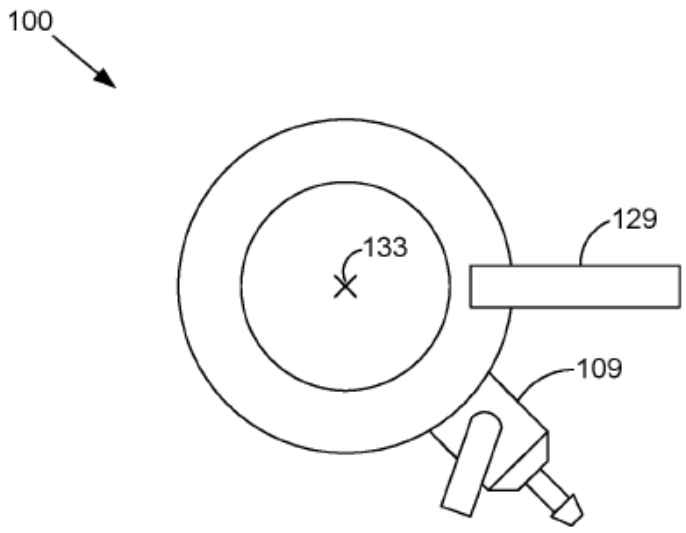

FIG. 2

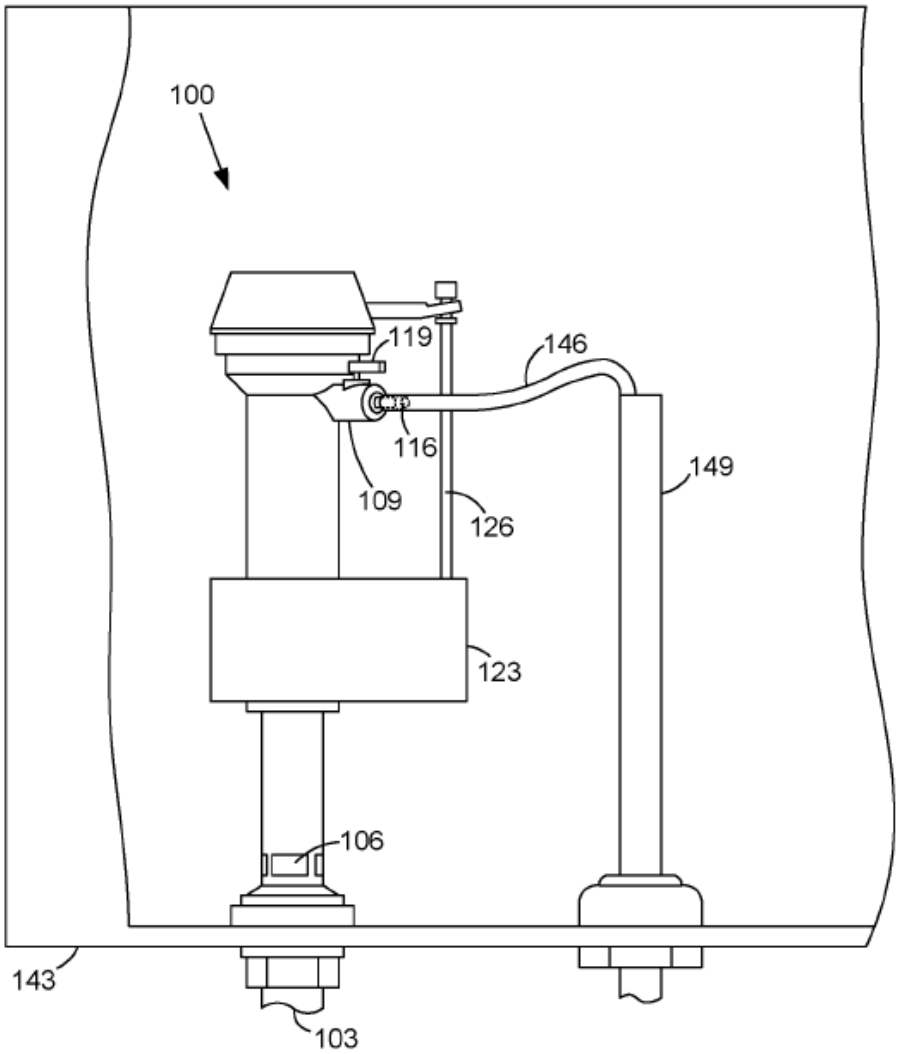

FIG. 3

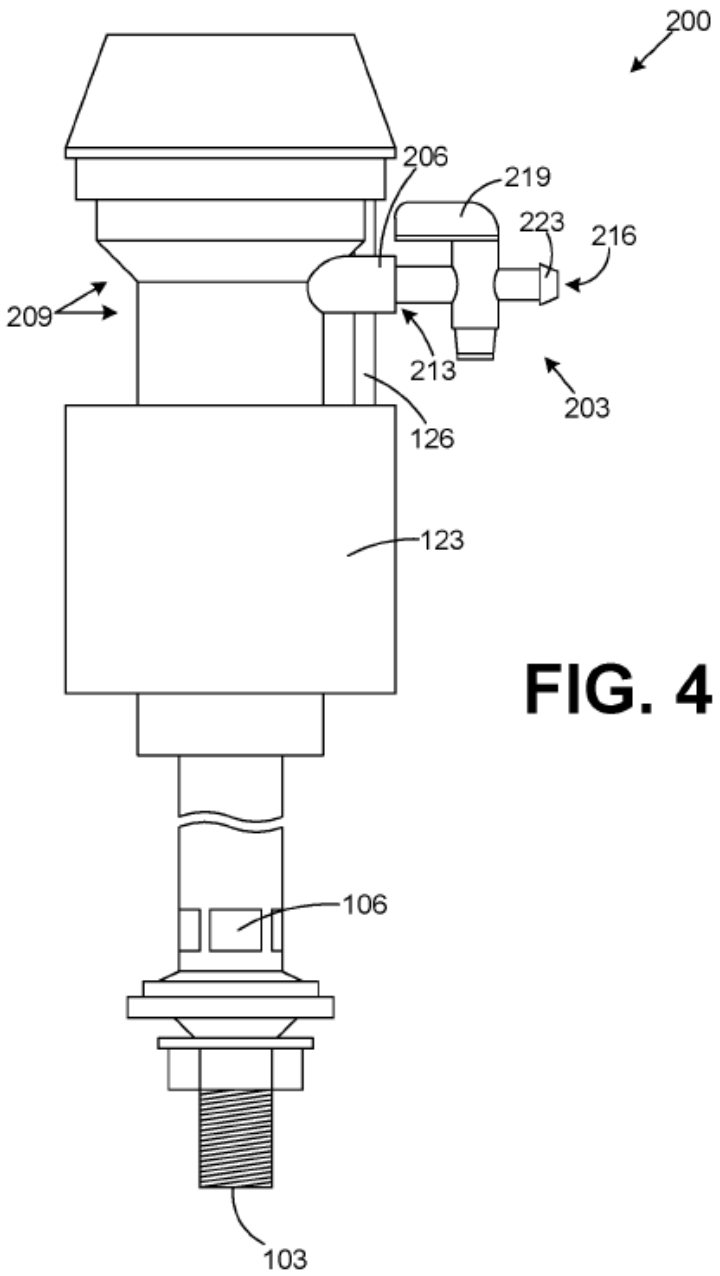

FIG. 4

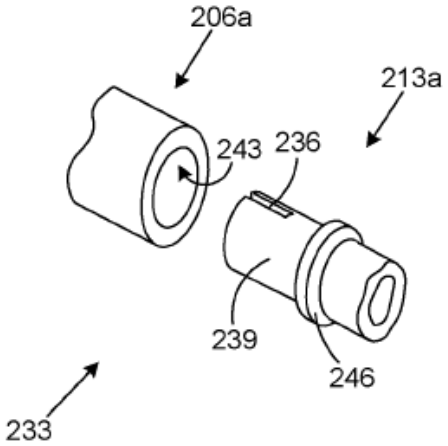
206a
213a
243
236
239
246
233

FIG. 5A

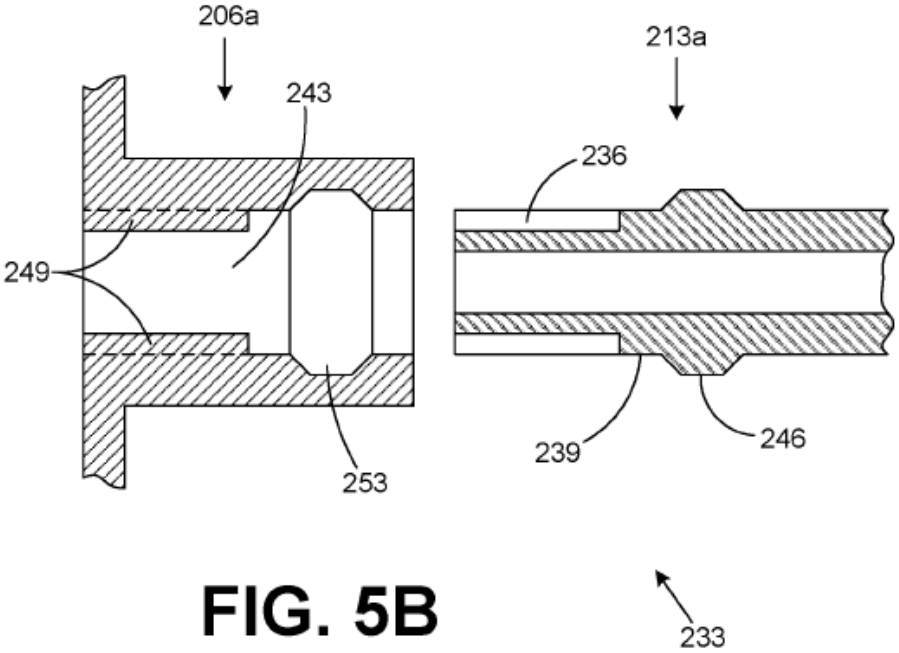
206a
243
213a
236
249
239
246
253
233

FIG. 5B

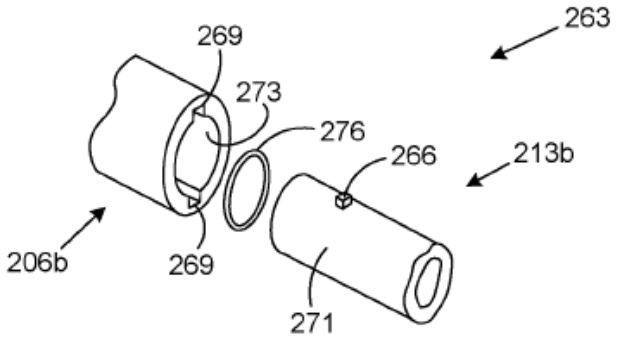

FIG. 6A

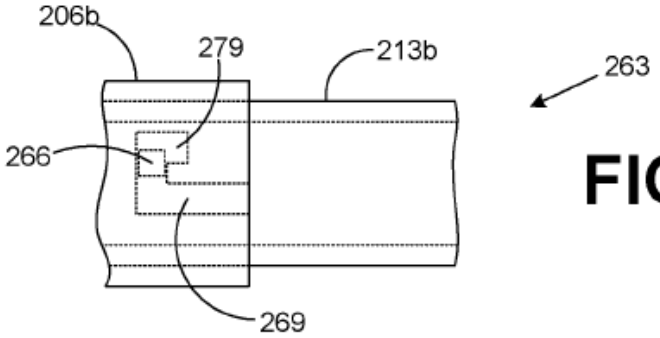

FIG. 6B

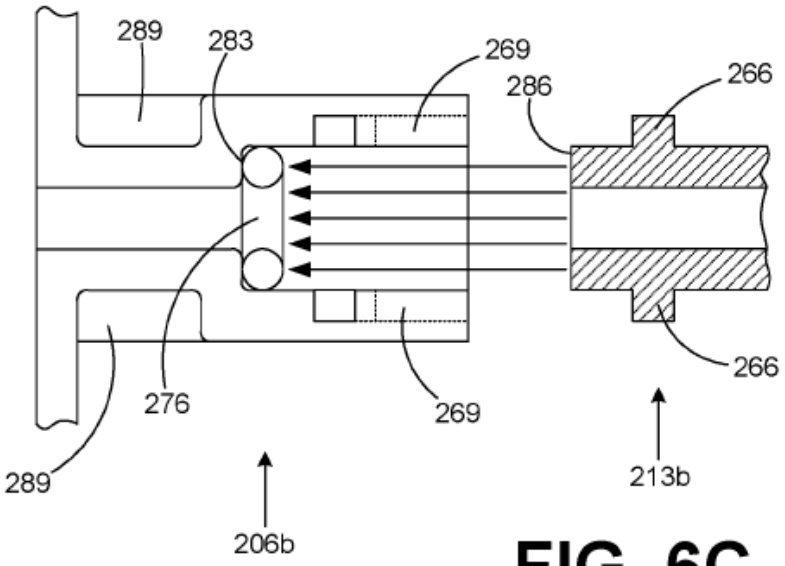

FIG. 6C

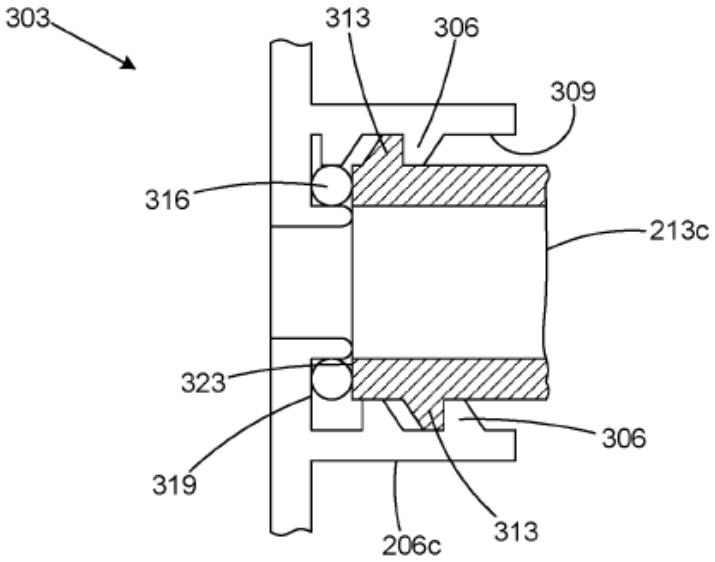

FIG. 7

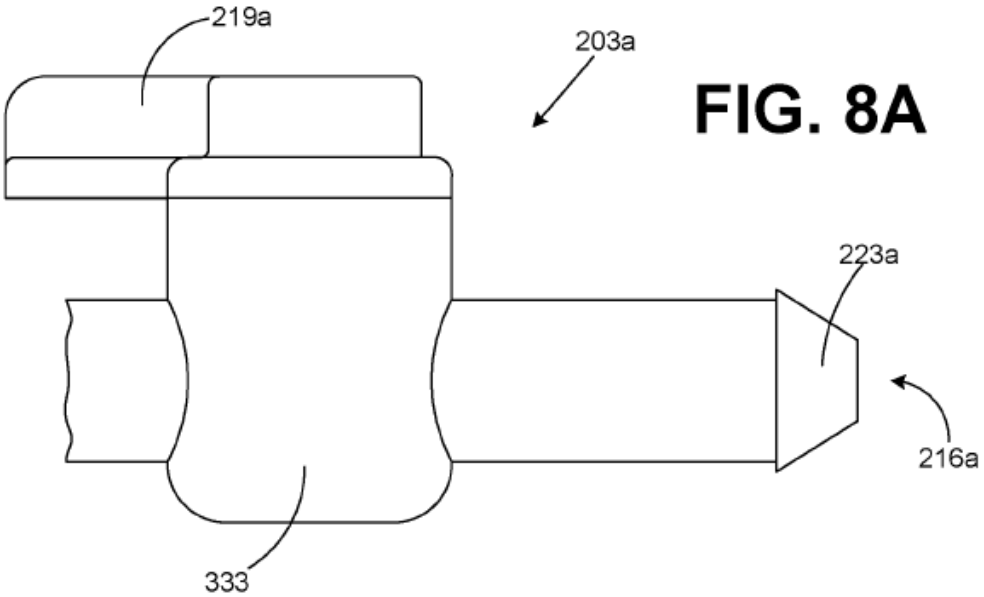

FIG. 8A

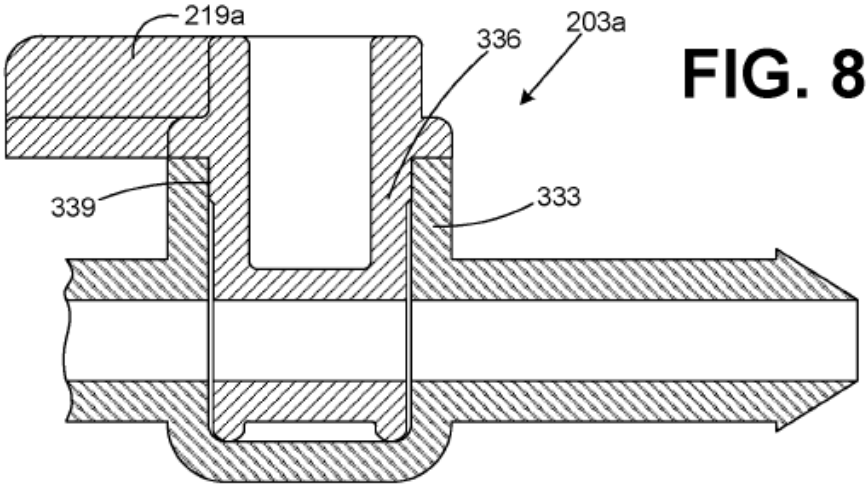

FIG. 8B

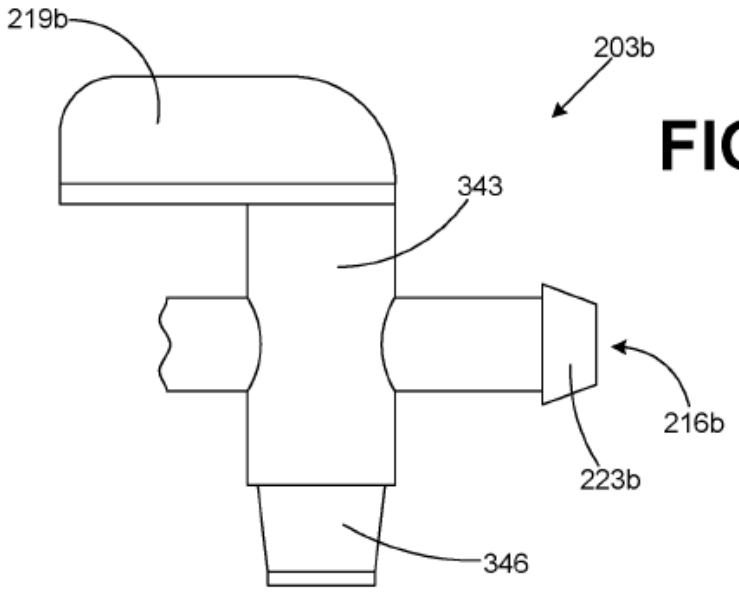

FIG. 9A

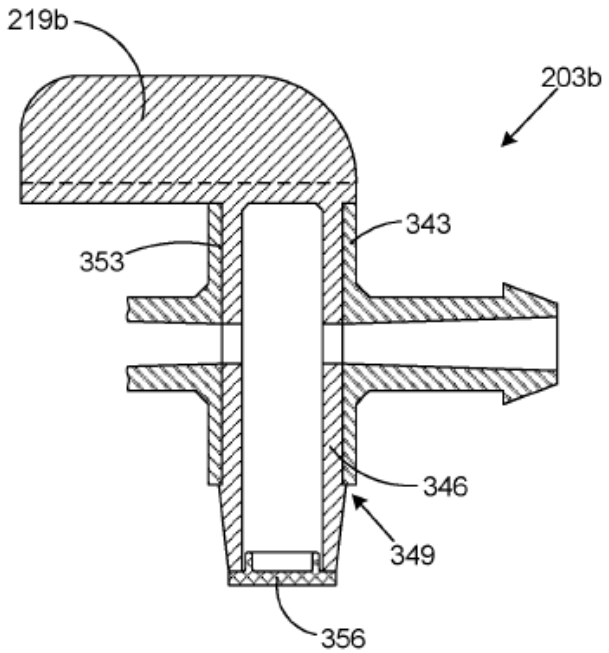

FIG. 9B

TOILET VALVE

CROSS-REFERENCE TO RELATED APPLICATIONS

The present patent application is a continuation application of, and claims priority to, U.S. patent application Ser. No. 14/856,901 filed on Sep. 17, 2015 and titled "TOILET VALVE," which is a continuation application of, and claims priority to U.S. patent application Ser. No. 14/164,424 filed on Jan. 27, 2014 and titled "TOILET FILL VALVE," which is a continuation application of, and claims priority to U.S. patent application Ser. No. 13/346,355 filed on Jan. 9, 2012 and titled "TOILET FILL VALVE WITH ADJUSTABLE BOWL FILL FLOW," which is a continuation application of, and claims priority to, U.S. patent application Ser. No. 12/786,904 filed on May 25, 2010 and titled "TOILET FILL VALVE WITH ADJUSTABLE BOWL FILL FLOW," which is a continuation application of, and claims priority to, U.S. application Ser. No. 10/958,797 filed on Oct. 5, 2004 and titled "TOILET FILL VALVE WITH ADJUSTABLE BOWL FILL FLOW," which is a continuation-in-part application of, and claims priority to, U.S. patent application Ser. No. 10/798,606 filed on Mar. 11, 2004 and titled "TOILET FILL VALVE WITH ADJUSTABLE BOWL FILL FLOW."

BACKGROUND

A toilet fill valve in a toilet typically includes a water outlet that provides water for refilling a toilet bowl during a flush cycle. Unfortunately, the water flowing out of such conventional water outlets to fill a toilet bowl provide much more water than is necessary to fill the average toilet bowl. Consequently, much of the water that flows into a toilet bowl during the average flush cycle is lost down the drain. This translates into a loss of millions of gallons of water each year.

BRIEF DESCRIPTION OF THE SEVERAL VIEWS OF THE DRAWINGS

The invention can be understood with reference to the following drawings. The components in the drawings are not necessarily to scale. Also, in the drawings, like reference numerals designate corresponding parts throughout the several views.

FIG. **1** is a drawing of a side view of a toilet fill valve according to an embodiment of the present invention;

FIG. **2** is a drawing of a top view of the toilet fill valve of FIG. **1**;

FIG. **3** is a drawing of a cutaway view of a toilet tank within which the toilet fill valve of FIG. **1** is installed;

FIG. **4** is a drawing of a side view of a toilet fill valve according to an embodiment of the present invention;

FIGS. **5**A and **5**B are drawings that illustrate one example of a coupling of a bowl fill valve to the toilet fill valve of FIG. **4** according to an embodiment of the present invention;

FIGS. **6**A, **6**B, and **6**C are drawings that illustrate another example of a coupling of a bowl fill valve to the toilet fill valve of FIG. **4** according to an embodiment of the present invention;

FIG. **7** is a drawing that illustrates still another example of a coupling of a bowl fill valve to the toilet fill valve of FIG. **4** according to an embodiment of the present invention;

FIGS. **8**A and **8**B are drawings that illustrate an example of a bowl fill valve that is coupled to the toilet fill valve of FIG. **4** according to an embodiment of the present invention; and

FIGS. **9**A and **9**B are drawings that illustrate another example of a bowl fill valve that is coupled to the toilet fill valve of FIG. **4** according to an embodiment of the present invention.

DETAILED DESCRIPTION

With reference to FIG. **1**, shown is a toilet fill valve **100** according to an embodiment of the present invention. The toilet fill valve **100** includes a water inlet **103** at the bottom of the toilet fill valve **100** that is configured to be coupled to a water source outside of a toilet tank within which the toilet fill valve **100** is installed. The toilet fill valve **100** includes one or more water outlets **106** that are configured to supply water into a toilet tank within which the toilet fill valve **100** is installed. The toilet fill valve **100** may be, for example, a pilot style fill valve. However, it is understood that the toilet fill valve **100** may be any style of fill valve such as, for example, a ballcock valve, etc. The toilet fill valve **100** also includes a bowl fill valve **109** according to an embodiment of the present invention. The bowl fill valve **109** includes a bowl fill valve inlet **113** and a bowl fill valve outlet **116**. In addition, the bowl fill valve **109** includes a handle **119** that facilitates a manual adjustment of the bowl fill valve **109**.

The bowl fill valve **109** is integral with the toilet fill valve **100**. In this respect, the term "integral" refers to the fact that the bowl fill valve **109** and the toilet fill valve **100** comprise a single structure. In this respect, the bowl fill valve **109** may be included within the body of the toilet fill valve **100** as a portion of the toilet fill valve **100** in a single piece construction. Specifically, the bowl fill valve **109** may be molded as a portion of the toilet fill valve **100** or it may be snapped or clamped into place, or it may be attached to the toilet fill valve **100** in some other manner, etc.

Within the toilet fill valve **100**, the bowl fill valve inlet **113** is operatively coupled to the water inlet **103**. In this respect, when the toilet fill valve **100** is open and water flows from the water inlet **103** to the water outlets **106** and into a toilet tank, an amount of water is also supplied to the bowl fill valve inlet **113** that flows through the bowl fill valve **109** and out the bowl fill valve outlet **116**. By virtue of the manual setting of the handle **119** of the bowl fill valve **109**, the flow of water through the bowl fill valve **109** is regulated. In this manner, the flow of water is regulated so that enough water flows out of the bowl fill valve **109** to fill a toilet bowl without wasting any water down a drain.

Thus, the bowl fill valve **109** is configured to supply an adjustable flow of water out of the bowl fill outlet **116** that is directed to a toilet bowl during a flush cycle of a toilet to fill the toilet bowl. The flow of water is adjusted so that just enough flows out of bowl fill valve **109** so as to fill the toilet bowl without wasting any water.

The toilet fill valve **100** includes a float **123** that is operatively coupled to an actuating arm (not shown) by a translating stem **126**. The float **123** floats on the water within a toilet tank and, depending on the location of the float **123** along the toilet fill valve **100**, the toilet fill valve **100** is open or closed as can be appreciated by those with ordinary skill in the art. The bowl fill valve **109** and the actuating arm (not shown) are each located on the toilet fill valve **100** so as to prevent any interference between the bowl fill valve **109** and the translational stem **126** or the actuating arm as will be discussed.

According to an embodiment of the present invention, the bowl fill valve **109** may include a number of biased positions. In this respect, the movement of the handle **119** may cause the bowl fill valve **109** to move from one predefined

biased position to other predefined biased positions. In this respect, various mechanisms such as tabs, snaps, or other position biasing structures may be employed. The biased positions of the bowl fill valve **109** help ensure that the bowl fill valve **109** remains in a given setting selected by a user by a manual manipulation of the handle **119** during the normal course of operation of the toilet fill valve **100**. Thus, by virtue of the biased positions, the bowl fill valve **109** is prevented from moving out of a desired position set by a user over a long period of use due to vibration and other factors as can be appreciated by those with ordinary skill in the art.

The bowl fill valve **109** may be, for example, a ball valve, a gate valve, a globe valve, a plug valve, a diaphragm valve, a butterfly valve, a needle valve, a sliding gate, a quick turn valve, a knife valve or any other appropriate type of valve as can be appreciated by those with ordinary skill in the art.

To operate the toilet fill valve **100**, the toilet fill valve **100** is first installed within a toilet tank. When a toilet is flushed and the tank is drained, the float **123** moves downward along the toilet fill valve **100** and, consequently, the toilet fill valve **100** opens to allow water to flow from the water inlet **103** and out the water outlets **106** into a toilet tank. At the same time, water flows into the bowl fill valve inlet **113** and out the bowl fill valve outlet **116** through the bowl fill valve **109**. Based on the setting of the handle **119**, the bowl fill valve **109** determines the precise flow rate of the water that flows out the bowl fill valve outlet **116**. A tube is typically employed to direct the water flowing out the bowl fill valve outlet **116** to an overflow tube in the toilet tank. In this respect, the water flowing out the bowl fill valve outlet **116** refills the toilet bowl of the respective toilet.

Referring next to FIG. **2**, shown is a top view of the toilet fill valve **100** according to an embodiment of the present invention. In this respect, the actuating arm **129** of the toilet fill valve **100** is seen with respect to the bowl fill valve **109**. The actuating arm **129** is coupled to the float by way of the translational stem **126** (FIG. **1**). In this respect, the actuating arm **129** extends in an orthogonal direction relative to a longitudinal axis **133** of the toilet fill valve **100**. The longitudinal axis **133** is centered in the toilet fill valve **100** along the length of the toilet fill valve **100**. Also, the bowl fill valve **109** extends in an orthogonal direction relative to the longitudinal axis **133** of the toilet fill valve **100**. In order to prevent interference between the bowl fill valve **109** and the translational stem **126** or the actuating arm **129**, the actuating arm **129** is angularly offset relative to the bowl fill valve **109** as shown. In this respect, the translational stem **126** is coupled to the free end of the actuating arm **129**. By virtue of the angular offset between the bowl fill valve **109** and the actuating arm **129**, the operation of the bowl fill valve **109** does not interfere with the operation of the toilet fill valve **100** itself by virtue of the fact that the float **123** (FIG. **1**) can move freely with the movement of the translational stem **126** in order for proper operation of the toilet fill valve **100**.

With reference to FIG. **3**, shown is the toilet fill valve **100** as installed within a toilet tank **143** according to an embodiment of the present invention. In this respect, the toilet fill valve **100** includes the water inlet **103** that is coupled to a water source outside of the toilet tank **143**. The toilet fill valve **100** also includes one or more water outlets **106** that direct a flow of water into the toilet tank **143** during the operation of a flush cycle. The bowl fill valve **109** includes the bowl fill valve inlet (not shown) and the bowl fill valve outlet **116**, where the bowl fill valve inlet is operatively coupled to the water inlet **103** as described above. Also, the bowl fill valve **109** is integrated with the body of the toilet fill valve **100** as described above.

A tube **146** is coupled to the bowl fill valve outlet **116** and is directed into the overflow tube **149** of the toilet tank **143**. The tube **146** directs water that flows out of the bowl fill valve outlet **116** into the overflow tube **149** and refills the toilet bowl associated with the toilet tank **143** as can be appreciated by those with ordinary skill in the art. The bowl fill valve **109** is configured to supply the adjustable flow of water out the bowl fill valve outlet through the tube **146** and into the overflow tube **149** for filling the toilet bowl during the flush cycle of the toilet. In this respect, no pressure is seen within the tube **146**. Specifically, the fact that the bowl fill valve **109** is integral with the toilet fill valve **100** prevents the creation of a pressure head in the tube **146** as would be the case if the bowl fill valve **109** were included in the middle of the tube **146**. The fact that a pressure head is not created in any portion of the tube **146** prevents the tube **146** from working its way off of the bowl fill valve outlet **116** over time.

When installed, the bowl fill valve **109** is calibrated for the particular flush cycle of the toilet within which the toilet fill valve **100** is installed. To calibrate the bowl fill valve **109**, a user first determines the water level in the toilet bowl when the toilet bowl is full of water. This gives the user a starting and an ending point for determining when the toilet bowl of the respective toilet is full. Next, the bowl fill valve handle **119** is adjusted so that the bowl fill valve **109** is placed in a predefined position that allows a predefined flow of water to refill the toilet bowl. In this manner, one adjusts the actual flow of water that refills the toilet bowl. Thereafter, the user flushes the toilet itself. Next, the user determines if the flow of water into the toilet bowl by virtue of the adjustments made to the bowl fill valve **109** is adequate to refill the toilet bowl during the flush cycle. This may be determined, by identifying whether the level of the water in the toilet bowl reaches the full level determined at the beginning of the bowl fill valve calibration above.

The flow of water from the bowl fill valve **109** should be set so as to ensure that the water level in the toilet bowl reaches the full level at about the same time that the flush cycle ends. In other words, the level of water in the toilet bowl should reach its highest level at the same time that the flush cycle ends. This prevents any water from being lost down the drain associated with the toilet.

If the amount of water that flows into the toilet bowl is inadequate to refill the toilet bowl during the flush cycle as described above, then one should repeat the steps of adjusting the bowl fill valve, flushing the toilet, and then once again determining if the flow of water into the toilet bowl is adequate to refill the toilet bowl during a flush cycle.

Ultimately, during use of the toilet that includes the toilet fill valve **100** and the toilet tank **143**, a user flushes the toilet and a predetermined flow of water exits the bowl fill valve outlet **116** and is directed into the toilet bowl. After the toilet tank has drained during the flush cycle, a flapper closes in the toilet tank and the toilet tank refills. During the refilling of the tank, the water supplied by the bowl fill valve **109** fills the toilet bowl itself. The amount of water supplied by the bowl fill valve in the time it takes to refill the toilet tank should be approximately equal to the amount of water needed to fill the toilet bowl. By virtue of the fact that the bowl fill valve **109** is integrated within the toilet fill valve **100**, a pressure head is prevented from being created due to any potential pinching of the tube **146** or other similar adjustment mechanism.

With reference to FIG. **4**, shown is a toilet fill valve **200** according to another embodiment of the present invention. The toilet fill valve **200** includes the same water inlet **103** and the water outlets **106** as the toilet fill valve **100** (FIG. **1**). The toilet fill valve **200** also includes the float **123** and the translational stem **126** as was described with reference to the toilet fill valve **100**. In addition, the toilet fill valve **200** includes a bowl fill valve **203** that is integral with the toilet fill valve **200** as will be described. As stated above, the term "integral" refers to the fact that the bowl fill valve **203** and the toilet fill valve **200** comprise a single structure. In this embodiment, the bowl fill valve **203** is a separate component that is attached the body of the toilet fill valve **200**, thereby forming the integral, single structure.

The toilet fill valve **200** also includes a bowl fill outlet port **206** that radially extends from a portion of a body **209** of the toilet fill valve **200**. In this respect, the bowl fill outlet port is operatively coupled to the water inlet **103**. In particular, when the toilet fill valve **200** is in an "on" state, water that flows in the water inlet **103** flows out of both the water outlets **106** and the bowl fill outlet port **206**. The water flowing out of the bowl fill outlet port **206** flows through the bowl fill valve **203** as will be described.

The bowl fill valve **203** includes a bowl fill valve inlet port **213** and a bowl fill valve outlet port **216**. The bowl fill valve inlet port **213** is compatible with the bowl fill outlet port **206**, where the bowl fill valve inlet port **213** is coupled to the bowl fill outlet port **206** when the bowl fill valve **203** is coupled or affixed to the toilet fill valve **200**. The bowl fill valve inlet port **213** is compatible with the bowl fill outlet port **206** in the sense that both the bowl fill valve inlet port **213** and the bowl fill outlet port **206** comprise various structures that couple together when the bowl fill valve **203** is connected to the bowl fill outlet port **206** as will be described. In particular, various embodiments of the coupling between the bowl fill valve inlet port **213** and the bowl fill outlet port **206** are described herein.

The bowl fill valve **203** also includes a handle that may be adjusted by hand to adjust a flow of water through the bowl fill valve **203** during a flush operation of a toilet in which the toilet fill valve **200** is installed. Typically, the handle **219** is initially adjusted to a desired position when the toilet fill valve **200** is installed and generally remains in such position for the continued operation of the toilet fill valve **200**. During the life cycle of the bowl fill valve **203**, it may be possible that the bowl fill valve **203** is adjusted to take into account various changes in the operation of the toilet fill valve **200** such as, for example, changes in pressure or other operational changes.

The bowl fill valve **203** also includes a nipple **223**. The nipple **223** is adapted to mate with a tube that extends from the bowl fill valve outlet port **216** to the overfill tube **149** (FIG. **3**) in a manner similar to that as shown in FIG. **3** with respect to the tube **146** (FIG. **3**) that extends from the nipple **116** (FIG. **3**) to the overflow tube **149** (FIG. **3**). The bowl fill valve **203** extends beyond the bowl fill outlet port **206** in a radial direction with respect to the portion of the body **209** of the toilet fill valve **200**.

In some embodiments, the bowl fill outlet port **206** may comprise a female receptacle and, correspondingly, the bowl fill valve inlet port **213** may comprise a male end compatible with the female receptacle. Alternatively, the bowl fill valve inlet port **213** may comprise a female receptacle and the bowl fill outlet port **206** may comprise a male end compatible with such female receptacle.

The toilet fill valve **200** further includes an actuating arm (not shown) that extends in a radial direction that is orthogonal relative to a longitudinal axis of the toilet fill valve **200** in a manner similar as that described with reference to the toilet fill valve **100** (FIG. **1**). The longitudinal axis is defined as an axis that runs from the water inlet **103** through the body **209** of the toilet fill valve **200** and out the top of the toilet fill valve **200**. In one embodiment, the bowl fill valve **203** extends radially in an orthogonal direction relative to such longitudinal axis of the toilet fill valve **200**. Also, in one embodiment, the actuating arm is angularly offset relative to the bowl fill valve **203** to prevent interference between the bowl fill valve **203** and the translational stem **126** that extends from the float **123** to a free end of the actuating arm. This allows the float **123** to move up and down and to engage the actuating arm during the normal operation of the toilet fill valve **200** during various flush cycles.

In addition, the bowl fill valve **203** may be constructed with a number of biased positions that help prevent the bowl fill valve **203** from moving out of adjustment over time when the force of pressure develops therein. Also, the biased positions aid a user in actual adjustment of the bowl fill valve **203** as can be appreciated.

The toilet fill valve **200** provides an advantage in that the body **209** of the toilet fill valve **200** may be constructed with the bowl fill outlet port **206** using a molding process that is much less complex than attempting to mold the entire bowl fill valve **203** within the structure of the body **209** as a single molded construction as was described with reference to one embodiment of the toilet fill valve **100**. In this regard, the bowl fill valve **203** may be constructed as a separate component to the body **209** of the toilet fill valve **200** and assembled for distribution to end users.

Due to the fact that the bowl fill valve **203** is affixed to the toilet fill valve **200** through the coupling of the bowl fill outlet port **206** with the bowl fill valve inlet port **213**, then a pressure head that develops within the bowl fill valve **203** due to the adjustment of the handle **219** during operation of the toilet fill valve **200** will not cause the bowl fill valve **203** to fall off of the toilet fill valve **200**. Thus, when the toilet fill valve **200** is installed in a toilet tank **143**, a user may adjust the opening of the bowl fill valve **203** by adjusting the handle **219** until a desired flow of water flows out of the bowl fill valve outlet port **216** into a tube and into the overflow tube **149** of a toilet. This flow of water is typically established to refill a toilet bowl of a toilet. In this regard, the flow of the water into the overflow tube **149** that refills the toilet bowl during a toilet flush operation may be regulated or adjusted so as to minimize or eliminate the amount of water that is lost down the drain of a toilet due to over filling of the toilet bowl during a flush cycle of a toilet. In one embodiment, the bowl fill valve **203** is adjusted until the filling of the toilet bowl of the toilet coincides with the end of the flush cycle, thereby resulting in little or no loss of water.

Referring next to FIG. **5A**, shown is a coupling **233** between one embodiment of the bowl fill outlet port **206**, denoted herein as bowl fill outlet port **206*a***, and an embodiment of the bowl fill valve inlet port **213**, denote herein as bowl fill valve inlet port **213*a***. The bowl fill valve inlet port **213*a*** includes a slot **236** in a side wall **239**. The bowl fill outlet port **206*a*** comprises a rib (not shown) that extends from a side wall **243** that is inserted into the slot **236** when the bowl fill valve inlet port **213*a*** is inserted into the bowl fill outlet port **206*a***. The mating of the slot **236** with the rib prevents the rotation of the bowl fill valve **203** with respect to the bowl fill outlet port **206*a*** when the bowl fill valve inlet port **213*a*** is inserted into the bowl fill outlet port **206*a***. Alternatively, there may be a number of slots **236** in the side

wall **239** of the bowl fill valve inlet port **213***a* and a corresponding number of ribs extending from the side wall **243** of the bowl fill outlet port **206***a*.

The bowl fill valve inlet port **213***a* also includes an annular protrusion **246** that extends from the side wall **239** of the bowl fill valve inlet port **213***a*. Correspondingly, an annular groove (not shown) in the side wall **243** of the bowl fill outlet port **206***a* is provided that mates up with the annular protrusion **246** when the bowl fill valve inlet port **213***a* is inserted into the bowl fill outlet port **206***a*. In this respect, the annular protrusion **246** is snap fit into the annular groove (not shown), thereby affixing the bowl fill valve **203** to the bowl fill outlet port **206***a*.

Turning then to FIG. **5**B, shown is a cutaway view of the coupling **233** between the bowl fill outlet port **206***a* and the bowl fill valve inlet port **213***a* according to an embodiment of the present invention. In this respect, the bowl fill outlet port **206***a* is depicted with two ribs **249** extending from the side wall **243** within the bowl fill outlet port **206***a*. Also, the bowl fill outlet port **206***a* includes the annular groove **253** into which the annular protrusion **246** snaps when the bowl fill valve inlet port **213***a* is inserted into the bowl fill outlet port **206***a*. In this respect, the mating of the annular protrusion **246** with the annular groove **253** fixes the bowl fill valve **203** to the bowl fill outlet port **206***a*. In this respect, the bowl fill valve **203** becomes an integral portion of the toilet fill valve **200**.

Also, the fit between the annular protrusion **246** is a snug fit that forms a seal between the bowl fill outlet port **206***a* and the bowl fill valve inlet port **213***a* that prevents the leakage of water from the coupling **233** during a flush cycle. Alternatively, a snug fit may occur between other mating surfaces of the bowl fill outlet port **206***a* and the bowl fill valve inlet port **213***a* that prevents leakage of water from the coupling **233**.

With reference to FIGS. **5**A and **5**B, even though the slots **236** are depicted as being formed within the side wall **239** of the bowl fill valve inlet port **213** and the ribs **249** extend from the side wall **243** within the bowl fill outlet port **206**, it is possible that this arrangement may be reversed where the slots **236** are formed in the side wall **243** of the bowl fill outlet port **206***a* and the ribs **249** extend from the side wall **239** of the bowl fill valve inlet port **213***a*. In addition, the annular groove **253** may be created in the side wall **239** of the bowl fill valve inlet port **213** and the annular projection **246** may extend inward from the side wall **243** within the bowl fill outlet port **206** in a reverse arrangement than that shown with reference to FIG. **5**B.

Referring next to FIGS. **6**A, **6**B, and **6**C, shown is a coupling **263** between another embodiment of the bowl fill outlet port **206**, denoted herein as bowl fill outlet port **206***b*, and another embodiment of the bowl fill valve inlet port **213**, denoted herein as bowl fill valve inlet port **213***b*. The bowl fill valve inlet port **213***b* includes at least two locking ears **266** that mate with corresponding locking grooves **269** in the bowl fill outlet port **206***b*. In particular, the locking ears **266** extend from a side wall **271** of the bowl fill valve inlet port **213***b*. The locking grooves **269** are disposed in the side wall **273** of the bowl fill outlet port **206***b*. When the bowl fill valve **203** is inserted and twisted into the bowl fill outlet port **206***b*, each of the locking ears **266** is situated in a locking position of one of the locking grooves **269** as will be described. The coupling **263** further comprises a sealing ring **276** that may be, for example, a rubber O-ring or other type of sealing ring. The sealing ring **276** is compressed between an end of the bowl fill valve inlet port **213***b* and a seat within the bowl fill outlet port **206***b* as we described. While at least two locking ears **266** and corresponding locking grooves **269** are shown, it is possible that a design may be employed that comprises a single locking ear **266** and a single corresponding locking groove **269**.

With reference to FIG. **6**B, shown is a portion of the bowl fill valve inlet port **213***b* and the bowl fill outlet port **206***b* as the bowl fill valve inlet port **213***b* is inserted into the bowl fill outlet port **206***b* and is partially rotated such that the locking ears **266** are almost located in the locking positions **279**. In this respect, each of the locking grooves **269** is a "J" formation. The J formation of the locking grooves **269** allows the locking ears **266** to slide down and around the partial loop of the J and seat in the locking position **279** such that the sealing ring **276** exerts a force against the end of the bowl fill valve inlet port **213***b*, thereby pushing the locking ears **266** into the locking positions **279** of the locking grooves **269** and holding the locking ears **266** in place. This ensures that the bowl fill valve **203** remains coupled to the bowl fill outlet port **206***b*.

With reference to FIG. **6**C, shown is a cutaway view of the coupling **263** between the bowl fill outlet port **206***b* and the bowl fill valve inlet port **213***b*. In this respect, the bowl fill valve inlet port **213***b* is inserted into the bowl fill outlet port **206***b* in a manner such that the locking ears **266** mate with the locking grooves **269**. When the locking ears **266** reach the bottom of the "J" of the locking grooves **269**, then the bowl fill valve **203** is rotated so that the locking ears **266** may be seated in the locking positions **279**.

The sealing ring **276** is seated against a portion of the bowl fill outlet port **206***b*. In one embodiment, this portion is a seating face **283** of the bowl fill outlet port **206***b*. Also, a portion of the bowl fill valve inlet port **213***b* is mated against the sealing ring **276**. In one embodiment, this portion of the bowl fill valve inlet port **213***b* is an end face **286** such that the sealing ring is clamped between the seating face **283** and the end face **286** when the bowl fill valve inlet port **213***b* is inserted fully into the bowl fill outlet port **206***b*. The clamping or compression of the sealing ring **276** pushes the locking ears **266** into the locking position **279** of the locking grooves **269** once the bowl fill valve **203** is rotated accordingly. In this respect, the compressive force of the sealing ring **276** helps keep the bowl fill valve inlet port **213***b* of the bowl fill valve **203** mated with the bowl fill outlet port **206***b*. Also, the sealing ring **276** forms a seal between the bowl fill outlet port **206***b* and the bowl fill valve inlet port **213***b* that prevents leakage of water from the coupling **263** between the bowl fill outlet port **206***b* and the bowl fill valve inlet port **213***b*.

The locking positions **279** of the locking grooves and the locking ears **266** are located such that when the bowl fill valve **203** is rotated thereby positioning the locking ears **266** in the locking positions **279**, the bowl fill valve **203** is substantially upright. In addition, the bowl fill outlet port **206***b* includes structural ribs **289** that provide greater structural stability for the bowl fill outlet port **206***b* and its attachment to the portion of the body **209** of the toilet fill valve **200** (FIG. **4**). Alternatively, the bowl fill outlet port **206***b* may be attached without the structural ribs **289**. In addition, it may be the case that the locking ears **266** extend inward from the side wall **273** of the bowl fill outlet port **206***b* and that the locking grooves **269** be situated within the side wall **271** of the bowl fill valve inlet port **213***b*.

Referring next to FIG. **7**, shown is a cutaway view of a coupling **303** between a third embodiment of the bowl fill outlet port **206**, denoted herein as bowl fill outlet port **206***c* and the bowl fill valve inlet port **213** denoted herein as bowl fill valve inlet port **213***c*. In this respect, the bowl fill outlet

port **206***c* includes a first thread **306** disposed on a side wall **309** of the bowl fill outlet port **206***c*. A second thread **313** is disposed on a side wall of the bowl fill valve inlet port **213***c* that engages the first thread **306** disposed in the side wall of the bowl fill outlet port **206***c*. The bowl fill valve inlet port **213***c* is coupled to the bowl fill outlet port **206***c* by way of the first and second threads **306** and **313**. Specifically, the bowl fill valve **203** may be screwed onto the bowl fill outlet port **206***c* by virtue of the threads **306** and **313**. When the bowl fill valve inlet port **213***c* is screwed into the bowl fill valve outlet port **206***c*, a sealing ring **316** is clamped between portions of the bowl fill valve inlet port **213***c* and the bowl fill outlet port **206***c* such as a seating face **319** of the bowl fill outlet port **206***c* and an end face **323** of the bowl fill valve inlet port **213***c*. In this respect, a seal is formed between the bowl fill outlet port **206***c* and the bowl fill valve inlet port **213***c*. Alternatively, the threads **306** and **313** may be specified so as to form an adequate seal between the bowl fill valve outlet port **206***c* and the bowl fill valve inlet port **213***c* for purposes of preventing leakage. As an additional alternative, the seating face **319** and the end face **323** or other portions of the bowl fill valve inlet port **213***c* and the bowl fill outlet port **206***c* may be compressed together to form a seal to prevent leakage. Alternatively, the bowl fill outlet port **206***c* and the bowl fill valve inlet port **213***c* may be designed to include mating surfaces that perform a friction seal as can be appreciated.

Referring next to FIG. **8***a*, shown is one embodiment of the bowl fill valve **203**, denoted herein as bowl fill valve **203***a* according to an embodiment of the present invention. The bowl fill valve **203***a* includes a handle **219***a* and a valve body **333**. The bowl fill valve **203***a* includes the bowl fill valve outlet port **216***a* and the bowl fill valve inlet port (not shown) the bowl fill valve outlet port **216***a* includes a nipple **223***a*.

Referring then to FIG. **8***b*, shown is a cutaway view of the bowl fill valve **203***a* according to an embodiment of the present invention. In this respect, the valve body **333** forms a cavity within which a valve **336** is inserted as shown. A line contact **339** is formed between surfaces of the valve body **333** and the valve **336** so as to both hold the valve **336** within the cavity that is formed by the valve body **333** and to form a seal between the valve body **333** and the valve **336** to prevent water leakage. As seen, the valve **336** is integrated with the handle **219***a* in a single piece construction, although multiple piece construction may be employed.

With reference to FIGS. **9***a* and **9***b*, shown is a second embodiment of the bowl fill valve **203**, denoted herein as bowl fill valve **203***b* according to an embodiment of the present invention. The bowl fill valve **203***b* includes a valve body **343** within which is inserted a valve **346**. The bowl fill valve **203***b* further comprises the bowl fill valve outlet port **216***b* and a bowl fill valve inlet port (not shown). The bowl fill valve outlet port **216***b* includes a nipple **223***b*. The bowl fill valve **203***b* further includes a handle **219***b* for manual adjustment of the bowl fill valve **203***b*.

Referring next to FIG. **9***b*, shown is a cutaway view of the bowl fill valve **203***b* according to an embodiment of the present invention. As shown, the valve **346** is inserted into the valve body **343**. A snap fit **349** affixes the valve **346** within the valve body **343**. A seal is formed by virtue of an interference fit **353** between a surface of the valve **346** and an inner surface of the valve body **343**. The bottom of the cavity within the valve **346** is closed by a cap **356** that may be spin welded onto the valve **346** after the valve is inserted into the valve body **343**.

In addition, referring back to FIG. **4**, other types of couplings may be employed between the bowl fill outlet port **206** the bowl fill valve inlet port **213**. For example, the bowl fill outlet port **206** the bowl fill valve inlet port **213** may be configured to facilitate a compression fitting there between. Also, other snap fit and sealing configurations may be employed beyond those specifically described herein.

Although the invention is shown and described with respect to certain embodiments, it is obvious that equivalents and modifications will occur to others skilled in the art upon the reading and understanding of the specification. The present invention includes all such equivalents and modifications, and is limited only by the scope of the claims.

What is claimed is:

1. A toilet system, comprising:

a toilet fill valve that comprises:

a body comprising an extended portion that forms a bowl fill outlet port;

a water inlet configured to couple to a water source; and

a tank water outlet configured to output water to a toilet tank;

a bowl fill valve configured to attach directly to the body of the toilet fill valve, the bowl fill valve comprising:

a bowl fill valve inlet port configured to mate directly to the bowl fill outlet port of the body of the toilet fill valve;

a bowl fill valve outlet port;

a protrusion configured to insert into a recess of the toilet fill valve and retain the bowl fill valve to the toilet fill valve, the protrusion being configured to snap fit into the recess;

a water flow adjustment handle; and

a slot configured to receive an extension of the toilet fill valve and prevent rotation of the bowl fill valve relative to the toilet fill valve; and

a tube configured to attach directly to the bowl fill valve outlet port of the bowl fill valve.

2. The toilet system of claim **1**, wherein the bowl fill outlet port comprises a male end, and wherein the bowl fill valve inlet port comprises a female receptacle for the male end of the bowl fill outlet port.

3. The toilet system of claim **1**, wherein the protrusion of the bowl fill valve is an annular protrusion located on a bowl fill valve side wall of the bowl fill valve, wherein the recess of the toilet fill valve is an annular recess located on a bowl fill outlet port side wall of the bowl fill outlet port, wherein the slot of the bowl fill valve is located on the bowl fill valve side wall, and wherein the extension of the toilet fill valve is a rib on the bowl fill outlet port side wall.

4. The toilet system of claim **1**, wherein the bowl fill outlet port extends radially from a longitudinal axis of the body of the toilet fill valve.

5. The toilet system of claim **4**, wherein the toilet fill valve further comprises an actuation arm that extends radially from the longitudinal axis of the body of the toilet fill valve, and wherein the actuation arm is angularly offset relative to the bowl fill outlet port.

6. The toilet system of claim **1**, wherein the toilet fill valve further comprises a float configured to move along at least a portion of the body of the toilet fill valve.

7. The toilet system of claim **6**, wherein the at least a portion of the body of the toilet fill valve extends through the float.

8. A bowl fill valve, comprising:

a bowl fill valve inlet port configured to mate directly to a bowl fill outlet port of a body of a toilet fill valve;

a bowl fill valve outlet port configured to attach directly to a tube that provides water from the bowl fill valve outlet port to an overflow tube;

a protrusion configured to insert into a recess of the toilet fill valve and retain the bowl fill valve to the toilet fill valve, the protrusion being configured to snap fit into the recess;

a slot configured to receive an extension of the toilet fill valve and prevent rotation of the bowl fill valve relative to the toilet fill valve; and

a water flow adjustment handle being configured to adjust water flow from the bowl fill valve inlet port to the bowl fill valve outlet port.

9. The bowl fill valve of claim **8**, wherein the bowl fill valve inlet port comprises a female receptacle for a male end of the bowl fill outlet port.

10. A method, comprising:

coupling a water inlet of a toilet fill valve to a water source;

attaching a bowl fill valve directly to a body of the toilet fill valve by at least:

mating a bowl fill valve inlet port of the bowl fill valve directly to a bowl fill outlet port that extends from the body of the toilet fill valve;

snap fitting a protrusion of the bowl fill valve into a recess of the toilet fill valve; and

inserting an extension of the toilet fill valve into a slot of the bowl fill valve, wherein the slot is configured to prevent rotation of the bowl fill valve relative to the toilet fill valve; and

attaching a tube directly to a bowl fill valve outlet port of the bowl fill valve.

11. The method of claim **10**, further comprising adjusting a flow of water out of the bowl fill valve.

12. A bowl fill valve, comprising:

a bowl fill valve inlet port configured to mate directly to a bowl fill outlet port of a body of a toilet fill valve;

a bowl fill valve outlet port configured to attach directly to a tube that provides water from the bowl fill valve outlet port to an overflow tube;

a protrusion on the bowl fill valve configured to snap fit into a recess of the toilet fill valve and retain the bowl fill valve to the toilet fill valve;

a slot configured to receive an extension of the toilet fill valve and prevent rotation of the bowl fill valve relative to the toilet fill valve; and

means for adjusting water flow out of the bowl fill valve outlet port.

13. The bowl fill valve of claim **12**, wherein the means for adjusting water flow out of the bowl fill valve outlet port comprises an adjustment handle.

14. The toilet system of claim **1**, wherein the bowl fill valve inlet port is configured to be inserted within a portion of the bowl fill outlet port.

* * * * *

EXHIBIT D

Fluidmaster, Inc. - EX1003, Page 071
IPR2024-00633 (Fluidmaster Inc v. Danco Inc)

EXHIBIT E

Fluidmaster, Inc. - EX1003, Page 072
IPR2024-00633 (Fluidmaster Inc v. Danco Inc)

General Information

Case Name	Danco Inc. v. Fluidmaster Inc. et al
Court	U.S. District Court for the Central District of California
Date Filed	Wed Jun 28 00:00:00 EDT 2023
Federal Nature of Suit	Property Rights: Patent [830]
Docket Number	8:23-cv-01156
Parties	Fluidmaster Inc.; Danco Inc.; Does 1-5, Inclusive

Bloomberg Law®

© 2023 Bloomberg Industry Group, Inc. All Rights Reserved. Terms of Service