UNITED STATES PATENT AND TRADEMARK OFFICE

UNITED STATES DEPARTMENT OF COMMERCE
United States Patent and Trademark Office
Address: COMMISSIONER FOR PATENTS
P.O. Box 1450
Alexandria, Virginia 22313-1450
www.uspto.gov

APPLICATION NO.	ISSUE DATE	PATENT NO.	ATTORNEY DOCKET NO.	CONFIRMATION NO.
16/686,328	03/02/2021	10934698	171401-1037	6118

24504 7590 02/10/2021
THOMAS | HORSTEMEYER, LLP
3200 WINDY HILL ROAD, SE
SUITE 1600E
ATLANTA, GA 30339

ISSUE NOTIFICATION

The projected patent number and issue date are specified above.

Determination of Patent Term Adjustment under 35 U.S.C. 154 (b)
(application filed on or after May 29, 2000)

The Patent Term Adjustment is 0 day(s). Any patent to issue from the above-identified application will include an indication of the adjustment on the front page.

If a Continued Prosecution Application (CPA) was filed in the above-identified application, the filing date that determines Patent Term Adjustment is the filing date of the most recent CPA.

Applicant will be able to obtain more detailed information by accessing the Patent Application Information Retrieval (PAIR) WEB site (http://pair.uspto.gov).

Any questions regarding the Patent Term Extension or Adjustment determination should be directed to the Office of Patent Legal Administration at (571)-272-7702. Questions relating to issue and publication fee payments should be directed to the Application Assistance Unit (AAU) of the Office of Data Management (ODM) at (571)-272-4200.

APPLICANT(s) (Please see PAIR WEB site http://pair.uspto.gov for additional applicants):

Danco, Inc., Irving, TX
Michael J. Schuster, Shorewood, IL;
Larry Schneider, Wadsworth, IL;

The United States represents the largest, most dynamic marketplace in the world and is an unparalleled location for business investment, innovation, and commercialization of new technologies. The USA offers tremendous resources and advantages for those who invest and manufacture goods here. Through SelectUSA, our nation works to encourage and facilitate business investment. To learn more about why the USA is the best country in the world to develop technology, manufacture products, and grow your business, visit SelectUSA.gov.

IR103 (Rev. 10/09)

INFORMATION DISCLOSURE STATEMENT BY APPLICANT (Not for submission under 37 CFR 1.99)		
	Application Number	
	Filing Date	
	First Named Inventor	Michael J. Schuster
	Art Unit	
	Examiner Name	
	Attorney Docket Number	171401-1037

	64	6219856	B1	2001-11-24	Alles	
	65	6263519	B1	2001-07-04	Parsons et al.	
	66	6295660	B1	2001-10-02	Schuster	
	67	6385788	B1	2002-05-14	Wasielewski	
	68	6409221	B1	2002-06-25	Robinson et al.	
	69	6560790	B2	2003-05-12	Saar et al.	
	70	6823889	B1	2004-11-30	Schuster	
	71	7743436	B1	2010-06-29	Schuster et al	
	72	8104105	B1	01/2012 ~~2010-06-29~~	Schuster et al.	
	73	8650671	B1	2014-02-18	Schuster et al.	
	74	9103105	B1	2015-08-11	Schuster et al.	

Change(s) applied to document. /C.L./ 12/3/2020

EFS Web 2.1.18

ALL REFERENCES CONSIDERED EXCEPT WHERE LINED THROUGH. /T.N.N/

PATENT

IN THE UNITED STATES PATENT AND TRADEMARK OFFICE

In re the application of:	Confirmation: 6118
Michael J. Schuster *et al.*	Art Unit: 3754
Application Number: 16/686,328	Examiner: NGUYEN, TUAN N.
Filing Date: November 18, 2019	Docket No.: 171401-1037

Title: **TOILET VALVE**

COMMENTS ON STATEMENT OF REASONS FOR ALLOWANCE

Mail Stop Issue Fee
Commissioner for Patents
P.O. Box 1450
Alexandria, VA 22313-1450

Sir:

The Statement of Reasons for Allowance includes some statements that may be viewed as an oversimplification of the examination issues, and if taken out of context, could give rise to an improper interpretation of the claims as well as the file history. For these reasons, Applicant respectfully provides the following comments.

First, Applicant asserts that there may be multiple grounds supporting allowance of the presently pending claims, including grounds in addition to those stated in the Statement of Reasons for Allowance.

Second, in accordance with 35 U.S.C. Section 282: "Each claim of a patent (whether in independent, dependent, or multiple dependent form) shall be presumed valid independently of the validity of other claims; dependent or multiple dependent claims shall be presumed valid even though dependent upon an invalid claim." Thus, the validity of any dependent claims that are not addressed by the Statement of Reasons for Allowance should not rise or fall with their respective independent claims, but instead should be presumed valid independently of their respective independent claims.

Third, Applicant respectfully disagrees with a statement in the Interview Summary appended to the Notice of Allowance, which states that "[i]t was agreed that the remaining double patenting rejections required the filing of a terminal disclaimer." While Applicant agreed to file the terminal disclaimer, Applicant does not necessarily agree that the double patenting rejections were appropriate or that the filing of a terminal disclaimer was necessary. Instead, Applicant has filed the terminal disclaimer solely to advance prosecution of the present application.

Respectfully submitted,

/Robert D. Pointer/

Attorney Robert D. Pointer
Registration No: 73,654

THOMAS | HORSTEMEYER, LLP
3200 WINDY HILL ROAD, SE
SUITE 1600E
Atlanta, Georgia 30339
Telephone: (770) 933-9500

Electronic Patent Application Fee Transmittal

Application Number:	16686328
Filing Date:	18-Nov-2019
Title of Invention:	TOILET VALVE
First Named Inventor/Applicant Name:	Michael J. Schuster
Filer:	Robert David Pointer/Christine Vieira
Attorney Docket Number:	171401-1037

Filed as Large Entity

Filing Fees for Utility under 35 USC 111(a)

Description	Fee Code	Quantity	Amount	Sub-Total in USD($)
Basic Filing:				
Pages:				
Claims:				
Miscellaneous-Filing:				
Petition:				
Patent-Appeals-and-Interference:				
Post-Allowance-and-Post-Issuance:				
UTILITY APPL ISSUE FEE	1501	1	1200	1200

Description	Fee Code	Quantity	Amount	Sub-Total in USD($)
Extension-of-Time:				
Miscellaneous:				
		Total in USD ($)		**1200**

Electronic Acknowledgement Receipt

EFS ID:	41795894
Application Number:	16686328
International Application Number:	
Confirmation Number:	6118
Title of Invention:	TOILET VALVE
First Named Inventor/Applicant Name:	Michael J. Schuster
Customer Number:	24504
Filer:	Robert David Pointer/Christine Vieira
Filer Authorized By:	Robert David Pointer
Attorney Docket Number:	171401-1037
Receipt Date:	01-FEB-2021
Filing Date:	18-NOV-2019
Time Stamp:	12:02:11
Application Type:	Utility under 35 USC 111(a)

Payment information:

Submitted with Payment	yes
Payment Type	CARD
Payment was successfully received in RAM	$1200
RAM confirmation Number	E202121C02396697
Deposit Account	200778
Authorized User	Christine Vieira

The Director of the USPTO is hereby authorized to charge indicated fees and credit any overpayment as follows:

37 CFR 1.20 (Post Issuance fees)

File Listing:

Document Number	Document Description	File Name	File Size(Bytes)/ Message Digest	Multi Part /.zip	Pages (if appl.)
1	Issue Fee Payment (PTO-85B)	171401-1037_Issue_Fee_Transmittal.pdf	133705 6be30ea18bc7bdf58291f66d7ba70b34293d2f90	no	1
Warnings:					
Information:					
2	Miscellaneous Incoming Letter	171401-1037__Comments_on_Reasons_for_Allowance.pdf	83361 89c11cabd2e60470e441fdf63c7b43e059e66921	no	2
Warnings:					
Information:					
3	Fee Worksheet (SB06)	fee-info.pdf	30348 d4eaafd05517d67b3b1b231c16e5c9d4cf145d96	no	2
Warnings:					
Information:					
		Total Files Size (in bytes):	247414		

This Acknowledgement Receipt evidences receipt on the noted date by the USPTO of the indicated documents, characterized by the applicant, and including page counts, where applicable. It serves as evidence of receipt similar to a Post Card, as described in MPEP 503.

<u>New Applications Under 35 U.S.C. 111</u>
If a new application is being filed and the application includes the necessary components for a filing date (see 37 CFR 1.53(b)-(d) and MPEP 506), a Filing Receipt (37 CFR 1.54) will be issued in due course and the date shown on this Acknowledgement Receipt will establish the filing date of the application.
<u>National Stage of an International Application under 35 U.S.C. 371</u>
If a timely submission to enter the national stage of an international application is compliant with the conditions of 35 U.S.C. 371 and other applicable requirements a Form PCT/DO/EO/903 indicating acceptance of the application as a national stage submission under 35 U.S.C. 371 will be issued in addition to the Filing Receipt, in due course.
<u>New International Application Filed with the USPTO as a Receiving Office</u>
If a new international application is being filed and the international application includes the necessary components for an international filing date (see PCT Article 11 and MPEP 1810), a Notification of the International Application Number and of the International Filing Date (Form PCT/RO/105) will be issued in due course, subject to prescriptions concerning national security, and the date shown on this Acknowledgement Receipt will establish the international filing date of the application.

PART B - FEE(S) TRANSMITTAL

Complete and send this form, together with applicable fee(s), by mail or fax, or via EFS-Web.

By mail, send to: Mail Stop ISSUE FEE
Commissioner for Patents
P.O. Box 1450
Alexandria, Virginia 22313-1450

By fax, send to: (571)-273-2885

INSTRUCTIONS: This form should be used for transmitting the ISSUE FEE and PUBLICATION FEE (if required). Blocks 1 through 5 should be completed where appropriate. All further correspondence including the Patent, advance orders and notification of maintenance fees will be mailed to the current correspondence address as indicated unless corrected below or directed otherwise in Block 1, by (a) specifying a new correspondence address; and/or (b) indicating a separate "FEE ADDRESS" for maintenance fee notifications.

CURRENT CORRESPONDENCE ADDRESS (Note: Use Block 1 for any change of address)

24504 7590 11/03/2020
THOMAS | HORSTEMEYER, LLP
3200 WINDY HILL ROAD, SE
SUITE 1600E
ATLANTA, GA 30339

Note: A certificate of mailing can only be used for domestic mailings of the Fee(s) Transmittal. This certificate cannot be used for any other accompanying papers. Each additional paper, such as an assignment or formal drawing, must have its own certificate of mailing or transmission.

Certificate of Mailing or Transmission

I hereby certify that this Fee(s) Transmittal is being deposited with the United States Postal Service with sufficient postage for first class mail in an envelope addressed to the Mail Stop ISSUE FEE address above, or being transmitted to the USPTO via EFS-Web or by facsimile to (571) 273-2885, on the date below.

(Typed or printed name)

(Signature)

(Date)

APPLICATION NO.	FILING DATE	FIRST NAMED INVENTOR	ATTORNEY DOCKET NO.	CONFIRMATION NO.
16/686,328	11/18/2019	Michael J. Schuster	171401-1037	6118

TITLE OF INVENTION: TOILET VALVE

APPLN. TYPE	ENTITY STATUS	ISSUE FEE DUE	PUBLICATION FEE DUE	PREV. PAID ISSUE FEE	TOTAL FEE(S) DUE	DATE DUE
nonprovisional	UNDISCOUNTED	$1200	$0.00	$0.00	$1200	02/03/2021

EXAMINER	ART UNIT	CLASS-SUBCLASS
NGUYEN, TUAN N	3754	004-418000

1. Change of correspondence address or indication of "Fee Address" (37 CFR 1.363).

❑ Change of correspondence address (or Change of Correspondence Address form PTO/SB/122) attached.

❑ "Fee Address" indication (or "Fee Address" Indication form PTO/SB/47; Rev 03-09 or more recent) attached. **Use of a Customer Number is required.**

2. For printing on the patent front page, list
(1) The names of up to 3 registered patent attorneys or agents OR, alternatively,
(2) The name of a single firm (having as a member a registered attorney or agent) and the names of up to 2 registered patent attorneys or agents. If no name is listed, no name will be printed.

1 Thomas Horstemeyer, LLP
2
3

3. ASSIGNEE NAME AND RESIDENCE DATA TO BE PRINTED ON THE PATENT (print or type)

PLEASE NOTE: Unless an assignee is identified below, no assignee data will appear on the patent. If an assignee is identified below, the document must have been previously recorded, or filed for recordation, as set forth in 37 CFR 3.11 and 37 CFR 3.81(a). Completion of this form is NOT a substitute for filing an assignment.

(A) NAME OF ASSIGNEE: Danco, Inc.

(B) RESIDENCE: (CITY and STATE OR COUNTRY): Irving, TX

Please check the appropriate assignee category or categories (will not be printed on the patent) : ❑ Individual ☒ Corporation or other private group entity ❑ Government

4a. Fees submitted: ☒ Issue Fee ❑ Publication Fee (if required) ❑ Advance Order - # of Copies _____

4b. Method of Payment: *(Please first reapply any previously paid fee shown above)*

☒ Electronic Payment via EFS-Web ❑ Enclosed check ❑ Non-electronic payment by credit card (Attach form PTO-2038)

☒ The Director is hereby authorized to ~~charge the required fee(s), any deficiency, or~~ credit any overpayment to Deposit Account No. 20-0778

5. **Change in Entity Status** (from status indicated above)

❑ Applicant certifying micro entity status. See 37 CFR 1.29

❑ Applicant asserting small entity status. See 37 CFR 1.27

❑ Applicant changing to regular undiscounted fee status.

NOTE: Absent a valid certification of Micro Entity Status (see forms PTO/SB/15A and 15B), issue fee payment in the micro entity amount will not be accepted at the risk of application abandonment.
NOTE: If the application was previously under micro entity status, checking this box will be taken to be a notification of loss of entitlement to micro entity status.
NOTE: Checking this box will be taken to be a notification of loss of entitlement to small or micro entity status, as applicable.

NOTE: This form must be signed in accordance with 37 CFR 1.31 and 1.33. See 37 CFR 1.4 for signature requirements and certifications.

Authorized Signature /Robert D. Pointer/ Date 2021-02-01

Typed or printed name Robert D. Pointer Registration No. 73,654

PTOL-85 Part B (08-18) Approved for use through 01/31/2020 OMB 0651-0033 U.S. Patent and Trademark Office; U.S. DEPARTMENT OF COMMERCE

Fluidmaster, Inc. - EX1006, Page 009
IPR2024-00633 (Fluidmaster Inc v. Danco Inc)

UNITED STATES PATENT AND TRADEMARK OFFICE

UNITED STATES DEPARTMENT OF COMMERCE
United States Patent and Trademark Office
Address: COMMISSIONER FOR PATENTS
P.O. Box 1450
Alexandria, Virginia 22313-1450
www.uspto.gov

NOTICE OF ALLOWANCE AND FEE(S) DUE

24504 7590 11/03/2020
THOMAS | HORSTEMEYER, LLP
3200 WINDY HILL ROAD, SE
SUITE 1600E
ATLANTA, GA 30339

EXAMINER
NGUYEN, TUAN N

ART UNIT	PAPER NUMBER
3754	

DATE MAILED: 11/03/2020

APPLICATION NO.	FILING DATE	FIRST NAMED INVENTOR	ATTORNEY DOCKET NO.	CONFIRMATION NO.
16/686,328	11/18/2019	Michael J. Schuster	171401-1037	6118

TITLE OF INVENTION: TOILET VALVE

APPLN. TYPE	ENTITY STATUS	ISSUE FEE DUE	PUBLICATION FEE DUE	PREV. PAID ISSUE FEE	TOTAL FEE(S) DUE	DATE DUE
nonprovisional	UNDISCOUNTED	$1200	$0.00	$0.00	$1200	02/03/2021

THE APPLICATION IDENTIFIED ABOVE HAS BEEN EXAMINED AND IS ALLOWED FOR ISSUANCE AS A PATENT. PROSECUTION ON THE MERITS IS CLOSED. THIS NOTICE OF ALLOWANCE IS NOT A GRANT OF PATENT RIGHTS. THIS APPLICATION IS SUBJECT TO WITHDRAWAL FROM ISSUE AT THE INITIATIVE OF THE OFFICE OR UPON PETITION BY THE APPLICANT. SEE 37 CFR 1.313 AND MPEP 1308.

THE ISSUE FEE AND PUBLICATION FEE (IF REQUIRED) MUST BE PAID WITHIN THREE MONTHS FROM THE MAILING DATE OF THIS NOTICE OR THIS APPLICATION SHALL BE REGARDED AS ABANDONED. THIS STATUTORY PERIOD CANNOT BE EXTENDED. SEE 35 U.S.C. 151. THE ISSUE FEE DUE INDICATED ABOVE DOES NOT REFLECT A CREDIT FOR ANY PREVIOUSLY PAID ISSUE FEE IN THIS APPLICATION. IF AN ISSUE FEE HAS PREVIOUSLY BEEN PAID IN THIS APPLICATION (AS SHOWN ABOVE), THE RETURN OF PART B OF THIS FORM WILL BE CONSIDERED A REQUEST TO REAPPLY THE PREVIOUSLY PAID ISSUE FEE TOWARD THE ISSUE FEE NOW DUE.

HOW TO REPLY TO THIS NOTICE:

I. Review the ENTITY STATUS shown above. If the ENTITY STATUS is shown as SMALL or MICRO, verify whether entitlement to that entity status still applies.

If the ENTITY STATUS is the same as shown above, pay the TOTAL FEE(S) DUE shown above.

If the ENTITY STATUS is changed from that shown above, on PART B - FEE(S) TRANSMITTAL, complete section number 5 titled "Change in Entity Status (from status indicated above)".

For purposes of this notice, small entity fees are 1/2 the amount of undiscounted fees, and micro entity fees are 1/2 the amount of small entity fees.

II. PART B - FEE(S) TRANSMITTAL, or its equivalent, must be completed and returned to the United States Patent and Trademark Office (USPTO) with your ISSUE FEE and PUBLICATION FEE (if required). If you are charging the fee(s) to your deposit account, section "4b" of Part B - Fee(s) Transmittal should be completed and an extra copy of the form should be submitted. If an equivalent of Part B is filed, a request to reapply a previously paid issue fee must be clearly made, and delays in processing may occur due to the difficulty in recognizing the paper as an equivalent of Part B.

III. All communications regarding this application must give the application number. Please direct all communications prior to issuance to Mail Stop ISSUE FEE unless advised to the contrary.

IMPORTANT REMINDER: Maintenance fees are due in utility patents issuing on applications filed on or after Dec. 12, 1980. It is patentee's responsibility to ensure timely payment of maintenance fees when due. More information is available at www.uspto.gov/PatentMaintenanceFees.

PTOL-85 (Rev. 02/11)

Fluidmaster, Inc. - EX1006, Page 010
IPR2024-00633 (Fluidmaster Inc v. Danco Inc)

PART B - FEE(S) TRANSMITTAL

Complete and send this form, together with applicable fee(s), by mail or fax, or via EFS-Web.

By mail, send to: Mail Stop ISSUE FEE
Commissioner for Patents
P.O. Box 1450
Alexandria, Virginia 22313-1450

By fax, send to: (571)-273-2885

INSTRUCTIONS: This form should be used for transmitting the ISSUE FEE and PUBLICATION FEE (if required). Blocks 1 through 5 should be completed where appropriate. All further correspondence including the Patent, advance orders and notification of maintenance fees will be mailed to the current correspondence address as indicated unless corrected below or directed otherwise in Block 1, by (a) specifying a new correspondence address; and/or (b) indicating a separate "FEE ADDRESS" for maintenance fee notifications.

CURRENT CORRESPONDENCE ADDRESS (Note: Use Block 1 for any change of address)

24504 7590 11/03/2020
THOMAS | HORSTEMEYER, LLP
3200 WINDY HILL ROAD, SE
SUITE 1600E
ATLANTA, GA 30339

Note: A certificate of mailing can only be used for domestic mailings of the Fee(s) Transmittal. This certificate cannot be used for any other accompanying papers. Each additional paper, such as an assignment or formal drawing, must have its own certificate of mailing or transmission.

Certificate of Mailing or Transmission

I hereby certify that this Fee(s) Transmittal is being deposited with the United States Postal Service with sufficient postage for first class mail in an envelope addressed to the Mail Stop ISSUE FEE address above, or being transmitted to the USPTO via EFS-Web or by facsimile to (571) 273-2885, on the date below.

(Typed or printed name)

(Signature)

(Date)

APPLICATION NO.	FILING DATE	FIRST NAMED INVENTOR	ATTORNEY DOCKET NO.	CONFIRMATION NO.
16/686,328	11/18/2019	Michael J. Schuster	171401-1037	6118

TITLE OF INVENTION: TOILET VALVE

APPLN. TYPE	ENTITY STATUS	ISSUE FEE DUE	PUBLICATION FEE DUE	PREV. PAID ISSUE FEE	TOTAL FEE(S) DUE	DATE DUE
nonprovisional	UNDISCOUNTED	$1200	$0.00	$0.00	$1200	02/03/2021

EXAMINER	ART UNIT	CLASS-SUBCLASS
NGUYEN, TUAN N	3754	004-418000

1. Change of correspondence address or indication of "Fee Address" (37 CFR 1.363).

❑ Change of correspondence address (or Change of Correspondence Address form PTO/SB/122) attached.

❑ "Fee Address" indication (or "Fee Address" Indication form PTO/SB/47; Rev 03-09 or more recent) attached. **Use of a Customer Number is required.**

2. For printing on the patent front page, list
(1) The names of up to 3 registered patent attorneys or agents OR, alternatively,
(2) The name of a single firm (having as a member a registered attorney or agent) and the names of up to 2 registered patent attorneys or agents. If no name is listed, no name will be printed.

1_____
2_____
3_____

3. ASSIGNEE NAME AND RESIDENCE DATA TO BE PRINTED ON THE PATENT (print or type)

PLEASE NOTE: Unless an assignee is identified below, no assignee data will appear on the patent. If an assignee is identified below, the document must have been previously recorded, or filed for recordation, as set forth in 37 CFR 3.11 and 37 CFR 3.81(a). Completion of this form is NOT a substitute for filing an assignment.

(A) NAME OF ASSIGNEE (B) RESIDENCE: (CITY and STATE OR COUNTRY)

Please check the appropriate assignee category or categories (will not be printed on the patent) : ❑ Individual ❑ Corporation or other private group entity ❑ Government

4a. Fees submitted: ❑Issue Fee ❑Publication Fee (if required) ❑Advance Order - # of Copies _____

4b. Method of Payment: *(Please first reapply any previously paid fee shown above)*

❑ Electronic Payment via EFS-Web ❑ Enclosed check ❑ Non-electronic payment by credit card (Attach form PTO-2038)

❑ The Director is hereby authorized to charge the required fee(s), any deficiency, or credit any overpayment to Deposit Account No. _____

5. **Change in Entity Status** (from status indicated above)

❑ Applicant certifying micro entity status. See 37 CFR 1.29

❑ Applicant asserting small entity status. See 37 CFR 1.27

❑ Applicant changing to regular undiscounted fee status.

NOTE: Absent a valid certification of Micro Entity Status (see forms PTO/SB/15A and 15B), issue fee payment in the micro entity amount will not be accepted at the risk of application abandonment.
NOTE: If the application was previously under micro entity status, checking this box will be taken to be a notification of loss of entitlement to micro entity status.
NOTE: Checking this box will be taken to be a notification of loss of entitlement to small or micro entity status, as applicable.

NOTE: This form must be signed in accordance with 37 CFR 1.31 and 1.33. See 37 CFR 1.4 for signature requirements and certifications.

Authorized Signature _____ Date _____

Typed or printed name _____ Registration No. _____

Fluidmaster, Inc. - EX1006, Page 011
IPR2024-00633 (Fluidmaster Inc v. Danco Inc)

UNITED STATES PATENT AND TRADEMARK OFFICE

UNITED STATES DEPARTMENT OF COMMERCE
United States Patent and Trademark Office
Address: COMMISSIONER FOR PATENTS
P.O. Box 1450
Alexandria, Virginia 22313-1450
www.uspto.gov

APPLICATION NO.	FILING DATE	FIRST NAMED INVENTOR	ATTORNEY DOCKET NO.	CONFIRMATION NO.
16/686,328	11/18/2019	Michael J. Schuster	171401-1037	6118

24504 7590 11/03/2020
THOMAS | HORSTEMEYER, LLP
3200 WINDY HILL ROAD, SE
SUITE 1600E
ATLANTA, GA 30339

EXAMINER
NGUYEN, TUAN N

ART UNIT	PAPER NUMBER
3754	

DATE MAILED: 11/03/2020

Determination of Patent Term Adjustment under 35 U.S.C. 154 (b)
(Applications filed on or after May 29, 2000)

The Office has discontinued providing a Patent Term Adjustment (PTA) calculation with the Notice of Allowance.

Section 1(h)(2) of the AIA Technical Corrections Act amended 35 U.S.C. 154(b)(3)(B)(i) to eliminate the requirement that the Office provide a patent term adjustment determination with the notice of allowance. See Revisions to Patent Term Adjustment, 78 Fed. Reg. 19416, 19417 (Apr. 1, 2013). Therefore, the Office is no longer providing an initial patent term adjustment determination with the notice of allowance. The Office will continue to provide a patent term adjustment determination with the Issue Notification Letter that is mailed to applicant approximately three weeks prior to the issue date of the patent, and will include the patent term adjustment on the patent. Any request for reconsideration of the patent term adjustment determination (or reinstatement of patent term adjustment) should follow the process outlined in 37 CFR 1.705.

Any questions regarding the Patent Term Extension or Adjustment determination should be directed to the Office of Patent Legal Administration at (571)-272-7702. Questions relating to issue and publication fee payments should be directed to the Customer Service Center of the Office of Patent Publication at 1-(888)-786-0101 or (571)-272-4200.

PTOL-85 (Rev. 02/11)

Fluidmaster, Inc. - EX1006, Page 012
IPR2024-00633 (Fluidmaster Inc v. Danco Inc)

OMB Clearance and PRA Burden Statement for PTOL-85 Part B

The Paperwork Reduction Act (PRA) of 1995 requires Federal agencies to obtain Office of Management and Budget approval before requesting most types of information from the public. When OMB approves an agency request to collect information from the public, OMB (i) provides a valid OMB Control Number and expiration date for the agency to display on the instrument that will be used to collect the information and (ii) requires the agency to inform the public about the OMB Control Number's legal significance in accordance with 5 CFR 1320.5(b).

The information collected by PTOL-85 Part B is required by 37 CFR 1.311. The information is required to obtain or retain a benefit by the public which is to file (and by the USPTO to process) an application. Confidentiality is governed by 35 U.S.C. 122 and 37 CFR 1.14. This collection is estimated to take 30 minutes to complete, including gathering, preparing, and submitting the completed application form to the USPTO. Time will vary depending upon the individual case. Any comments on the amount of time you require to complete this form and/or suggestions for reducing this burden, should be sent to the Chief Information Officer, U.S. Patent and Trademark Office, U.S. Department of Commerce, P.O. Box 1450, Alexandria, Virginia 22313-1450. DO NOT SEND FEES OR COMPLETED FORMS TO THIS ADDRESS. SEND TO: Commissioner for Patents, P.O. Box 1450, Alexandria, Virginia 22313-1450. Under the Paperwork Reduction Act of 1995, no persons are required to respond to a collection of information unless it displays a valid OMB control number.

Privacy Act Statement

The Privacy Act of 1974 (P.L. 93-579) requires that you be given certain information in connection with your submission of the attached form related to a patent application or patent. Accordingly, pursuant to the requirements of the Act, please be advised that: (1) the general authority for the collection of this information is 35 U.S.C. 2(b)(2); (2) furnishing of the information solicited is voluntary; and (3) the principal purpose for which the information is used by the U.S. Patent and Trademark Office is to process and/or examine your submission related to a patent application or patent. If you do not furnish the requested information, the U.S. Patent and Trademark Office may not be able to process and/or examine your submission, which may result in termination of proceedings or abandonment of the application or expiration of the patent.

The information provided by you in this form will be subject to the following routine uses:

1. The information on this form will be treated confidentially to the extent allowed under the Freedom of Information Act (5 U.S.C. 552) and the Privacy Act (5 U.S.C 552a). Records from this system of records may be disclosed to the Department of Justice to determine whether disclosure of these records is required by the Freedom of Information Act.
2. A record from this system of records may be disclosed, as a routine use, in the course of presenting evidence to a court, magistrate, or administrative tribunal, including disclosures to opposing counsel in the course of settlement negotiations.
3. A record in this system of records may be disclosed, as a routine use, to a Member of Congress submitting a request involving an individual, to whom the record pertains, when the individual has requested assistance from the Member with respect to the subject matter of the record.
4. A record in this system of records may be disclosed, as a routine use, to a contractor of the Agency having need for the information in order to perform a contract. Recipients of information shall be required to comply with the requirements of the Privacy Act of 1974, as amended, pursuant to 5 U.S.C. 552a(m).
5. A record related to an International Application filed under the Patent Cooperation Treaty in this system of records may be disclosed, as a routine use, to the International Bureau of the World Intellectual Property Organization, pursuant to the Patent Cooperation Treaty.
6. A record in this system of records may be disclosed, as a routine use, to another federal agency for purposes of National Security review (35 U.S.C. 181) and for review pursuant to the Atomic Energy Act (42 U.S.C. 218(c)).
7. A record from this system of records may be disclosed, as a routine use, to the Administrator, General Services, or his/her designee, during an inspection of records conducted by GSA as part of that agency's responsibility to recommend improvements in records management practices and programs, under authority of 44 U.S.C. 2904 and 2906. Such disclosure shall be made in accordance with the GSA regulations governing inspection of records for this purpose, and any other relevant (i.e., GSA or Commerce) directive. Such disclosure shall not be used to make determinations about individuals.
8. A record from this system of records may be disclosed, as a routine use, to the public after either publication of the application pursuant to 35 U.S.C. 122(b) or issuance of a patent pursuant to 35 U.S.C. 151. Further, a record may be disclosed, subject to the limitations of 37 CFR 1.14, as a routine use, to the public if the record was filed in an application which became abandoned or in which the proceedings were terminated and which application is referenced by either a published application, an application open to public inspection or an issued patent.
9. A record from this system of records may be disclosed, as a routine use, to a Federal, State, or local law enforcement agency, if the USPTO becomes aware of a violation or potential violation of law or regulation.

Notice of Allowability	Application No. 16/686,328	Applicant(s) Schuster et al.	
	Examiner TUAN N NGUYEN	Art Unit 3754	AIA (FITF) Status No

-- The MAILING DATE of this communication appears on the cover sheet with the correspondence address--

All claims being allowable, PROSECUTION ON THE MERITS IS (OR REMAINS) CLOSED in this application. If not included herewith (or previously mailed), a Notice of Allowance (PTOL-85) or other appropriate communication will be mailed in due course. **THIS NOTICE OF ALLOWABILITY IS NOT A GRANT OF PATENT RIGHTS.** This application is subject to withdrawal from issue at the initiative of the Office or upon petition by the applicant. See 37 CFR 1.313 and MPEP 1308.

1. ☑ This communication is responsive to the amendment filed 10/08/2020.
   ☐ A declaration(s)/affidavit(s) under **37 CFR 1.130(b)** was/were filed on _____.

2. ☐ An election was made by the applicant in response to a restriction requirement set forth during the interview on _____; the restriction requirement and election have been incorporated into this action.

3. ☑ The allowed claim(s) is/are 1,3-8,12,14,17,19,22 and 25-26 . As a result of the allowed claim(s), you may be eligible to benefit from the **Patent Prosecution Highway** program at a participating intellectual property office for the corresponding application. For more information, please see **http://www.uspto.gov/patents/init_events/pph/index.jsp** or send an inquiry to **PPHfeedback@uspto.gov.**

4. ☐ Acknowledgment is made of a claim for foreign priority under 35 U.S.C. § 119(a)-(d) or (f).

   Certified copies:

   a) ☐All b) ☐ Some *c) ☐ None of the:

   1. ☐ Certified copies of the priority documents have been received.
   2. ☐ Certified copies of the priority documents have been received in Application No. _____ .
   3. ☐ Copies of the certified copies of the priority documents have been received in this national stage application from the International Bureau (PCT Rule 17.2(a)).

   * Certified copies not received: _____ .

Applicant has THREE MONTHS FROM THE "MAILING DATE" of this communication to file a reply complying with the requirements noted below. Failure to timely comply will result in ABANDONMENT of this application.
THIS THREE-MONTH PERIOD IS NOT EXTENDABLE.

5. ☐ CORRECTED DRAWINGS (as "replacement sheets") must be submitted.
   ☐ including changes required by the attached Examiner's Amendment / Comment or in the Office action of Paper No./Mail Date _____ .

   Identifying indicia such as the application number (see 37 CFR 1.84(c)) should be written on the drawings in the front (not the back) of each sheet. Replacement sheet(s) should be labeled as such in the header according to 37 CFR 1.121(d).

6. ☐ DEPOSIT OF and/or INFORMATION about the deposit of BIOLOGICAL MATERIAL must be submitted. Note the attached Examiner's comment regarding REQUIREMENT FOR THE DEPOSIT OF BIOLOGICAL MATERIAL.

Attachment(s)

1. ☐ Notice of References Cited (PTO-892)
2. ☐ Information Disclosure Statements (PTO/SB/08), Paper No./Mail Date _____.
3. ☐ Examiner's Comment Regarding Requirement for Deposit of Biological Material _____.
4. ☑ Interview Summary (PTO-413), Paper No./Mail Date. _____.
5. ☐ Examiner's Amendment/Comment
6. ☑ Examiner's Statement of Reasons for Allowance
7. ☐ Other _____.

/TUAN N NGUYEN/
Primary Examiner, Art Unit 3754

Reasons for Allowance

The following is an examiner's statement of reasons for allowance: Applicant's amendments and arguments are persuasive and have overcome all prior rejections.

Any comments considered necessary by applicant must be submitted no later than the payment of the issue fee and, to avoid processing delays, should preferably accompany the issue fee. Such submissions should be clearly labeled "Comments on Statement of Reasons for Allowance."

Conclusion

Any inquiry concerning this communication or earlier communications from the examiner should be directed to TUAN N NGUYEN whose telephone number is (571)272-4892. The examiner can normally be reached on Mon-Fri 8-4.

Examiner interviews are available via telephone, in-person, and video conferencing using a USPTO supplied web-based collaboration tool. To schedule an interview, applicant is encouraged to use the USPTO Automated Interview Request (AIR) at http://www.uspto.gov/interviewpractice.

If attempts to reach the examiner by telephone are unsuccessful, the examiner's supervisor, David Angwin can be reached on (571) 270-3735. The fax phone number for the organization where this application or proceeding is assigned is 571-273-8300.

Information regarding the status of an application may be obtained from the Patent Application Information Retrieval (PAIR) system. Status information for published applications may be obtained from either Private PAIR or Public PAIR. Status information for unpublished applications is available through Private PAIR only.

For more information about the PAIR system, see https://ppair-my.uspto.gov/pair/PrivatePair. Should you have questions on access to the Private PAIR system, contact the Electronic Business Center (EBC) at 866-217-9197 (toll-free). If you would like assistance from a USPTO Customer Service Representative or access to the automated information system, call 800-786-9199 (IN USA OR CANADA) or 571-272-1000.

/TUAN N NGUYEN/
Primary Examiner, Art Unit 3754

Examiner-Initiated Interview Summary	Application No. 16/686,328	Applicant(s) Schuster et al.	
	Examiner TUAN N NGUYEN	Art Unit 3754	AIA (FITF) Status No

All participants (applicant, applicant's representative, PTO personnel):

(1) TUAN N. NGUYEN. (3) _____.

(2) DAVID POINTER. (4) _____.

Date of Interview: 14 October 2020.

Type: ☑ Telephonic ☐ Video Conference
☐ Personal [copy given to: ☐ applicant ☐ applicant's representative]

Exhibit shown or demonstration conducted: ☐ Yes ☐ No.
If Yes, brief description: _____.

Issues Discussed ☐ 101 ☐ 112 ☐ 102 ☐ 103 ☑ Others
(For each of the checked box(es) above, please describe below the issue and detailed description of the discussion)

Claim(s) discussed: 1,3-8,12,14,17,19,22 and 25-26.

Identification of prior art discussed: None.

Substance of Interview
(For each issue discussed, provide a detailed description and indicate if agreement was reached. Some topics may include: identification or clarification of a reference or a portion thereof, claim interpretation, proposed amendments, arguments of any applied references etc...)

It was agreed that the remaining double patenting rejections required the filing of a terminal disclaimer.

Applicant recordation instructions: It is not necessary for applicant to provide a separate record of the substance of interview.

Examiner recordation instructions: Examiners must summarize the substance of any interview of record. A complete and proper recordation of the substance of an interview should include the items listed in MPEP 713.04 for complete and proper recordation including the identification of the general thrust of each argument or issue discussed, a general indication of any other pertinent matters discussed regarding patentability and the general results or outcome of the interview, to include an indication as to whether or not agreement was reached on the issues raised.

☐ Attachment

/TUAN N NGUYEN/ Primary Examiner, Art Unit 3754	

Fluidmaster, Inc. - EX1006, Page 017
IPR2024-00633 (Fluidmaster Inc v. Danco Inc)

Search Notes	Application/Control No.	Applicant(s)/Patent Under Reexamination
	16/686,328	Schuster et al.
	Examiner	**Art Unit**
	TUAN N NGUYEN	3754

CPC - Searched*		
Symbol	**Date**	**Examiner**
E03D 1/34	01/08/2020	TN
B23P 15/001	01/08/2020	TN

CPC Combination Sets - Searched*		
Symbol	**Date**	**Examiner**

US Classification - Searched*			
Class	**Subclass**	**Date**	**Examiner**
4	383, 418	01/08/2020	TN

* See search history printout included with this form or the SEARCH NOTES box below to determine the scope of the search.

Search Notes		
Search Notes	**Date**	**Examiner**
INVENTOR SEARCHED	01/08/2020	TN
ABOVE CPC AND US UPDATED WITH TEXT SEARCH ATTACHED	10/28/2020	TN
EAST BRS TEXT SEARCH ATTACHED	10/28/2020	TN

Interference Search			
US Class/CPC Symbol	**US Subclass/CPC Group**	**Date**	**Examiner**
USPGPUB	INTERFERENCE TEXT SEARCH ATTACHED	10/28/2020	TN

Fluidmaster, Inc. - EX1006, Page 018
IPR2024-00633 (Fluidmaster Inc v. Danco Inc)

Issue Classification	Application/Control No.	Applicant(s)/Patent Under Reexamination
	16/686,328	Schuster et al.
	Examiner	**Art Unit**
	TUAN N NGUYEN	3754

CPC						
Symbol					**Type**	**Version**
E03D	/	1	/	34	F	2013-01-01
B23P	/	15	/	001	I	2013-01-01

CPC Combination Sets								
Symbol					**Type**	**Set**	**Ranking**	**Version**
	/		/					

NONE (Assistant Examiner)	(Date)	**Total Claims Allowed:** 14	
/TUAN N NGUYEN/ Primary Examiner, Art Unit 3754 (Primary Examiner)	28 October 2020 (Date)	O.G. Print Claim(s) 1	O.G. Print Figure 4 & 5B

U.S. Patent and Trademark Office

Part of Paper No.: 20201028

Fluidmaster, Inc. - EX1006, Page 019
IPR2024-00633 (Fluidmaster Inc v. Danco Inc)

Issue Classification	Application/Control No.	Applicant(s)/Patent Under Reexamination
	16/686,328	Schuster et al.
	Examiner	**Art Unit**
	TUAN N NGUYEN	3754

INTERNATIONAL CLASSIFICATION				
CLAIMED				
E03D	/	1	/	00
E03D1/34	/	1	/	34
B23P15/00	/	15	/	00

NON-CLAIMED				
	/		/	

US ORIGINAL CLASSIFICATION	
CLASS	**SUBCLASS**
4	383

CROSS REFERENCES(S)						
CLASS	**SUBCLASS (ONE SUBCLASS PER BLOCK)**					

NONE (Assistant Examiner)	(Date)	**Total Claims Allowed:** 14	
/TUAN N NGUYEN/ Primary Examiner, Art Unit 3754 (Primary Examiner)	28 October 2020 (Date)	O.G. Print Claim(s) 1	O.G. Print Figure 4 & 5B

U.S. Patent and Trademark Office

Part of Paper No.: 20201028

Fluidmaster, Inc. - EX1006, Page 020
IPR2024-00633 (Fluidmaster Inc v. Danco Inc)

Issue Classification	Application/Control No.	Applicant(s)/Patent Under Reexamination
	16/686,328	Schuster et al.
	Examiner	**Art Unit**
	TUAN N NGUYEN	3754

☑ Claims renumbered in the same order as presented by applicant ☐ CPA ☑ T.D. ☐ R.1.47

CLAIMS

Final	Original	Final	Original	Final	Original	Final	Original	Final	Original	Final	Original	Final	Original	Final	Original

NONE		Total Claims Allowed:	
(Assistant Examiner)	(Date)	14	
/TUAN N NGUYEN/ Primary Examiner, Art Unit 3754	28 October 2020	O.G. Print Claim(s)	O.G. Print Figure
(Primary Examiner)	(Date)	1	4 & 5B

U.S. Patent and Trademark Office Part of Paper No.: 20201028

Fluidmaster, Inc. - EX1006, Page 021
IPR2024-00633 (Fluidmaster Inc v. Danco Inc)

Bibliographic Data

Application No: 16/686,328

Foreign Priority claimed: ○ Yes ◉ No

35 USC 119 (a-d) conditions met: ☐ Yes ☑ No | ☐ Met After Allowance

Verified and Acknowledged: /TUAN N NGUYEN/ (Examiner's Signature) | Initials

Title: TOILET VALVE

FILING or 371(c) DATE	CLASS	GROUP ART UNIT	ATTORNEY DOCKET NO.
11/18/2019 **RULE**	004	3754	171401-1037

APPLICANTS

Danco, Inc., Irving, TX, UNITED STATES

INVENTORS

Michael J. Schuster, Shorewood, IL, UNITED STATES

Larry Schneider, Wadsworth, IL, UNITED STATES

CONTINUING DATA

This application is a CON of 14856901 09/17/2015 PAT 10519639

14856901 is a CON of 14164424 01/27/2014 PAT 9139993

14164424 is a CON of 13346355 01/09/2012 PAT 8650671

13346355 is a CON of 12786904 05/25/2010 PAT 8104105

12786904 is a CON of 10958797 10/05/2004 PAT 7743436

10958797 is a CIP of 10798606 03/11/2004 PAT 6823889

FOREIGN APPLICATIONS

IF REQUIRED, FOREIGN LICENSE GRANTED**

12/04/2019

STATE OR COUNTRY

UNITED STATES

ADDRESS

THOMAS | HORSTEMEYER, LLP
3200 WINDY HILL ROAD, SE
SUITE 1600E
ATLANTA, GA 30339
UNITED STATES

FILING FEE RECEIVED

$6,820

EAST Search History

EAST Search History (Interference)

Ref #	Hits	Search Query	DBs	Default Operator	Plurals	Time Stamp
L10	103	toilet and bowl and fill and valve and snap and (recess slot)	US-PGPUB	OR	OFF	2020/10/28 11:13

10/28/2020 11:16:04 AM
C:\Users\tnguyen25\Documents\EAST\Workspaces\16686328.wsp

EAST Search History

EAST Search History (Prior Art)

Ref #	Hits	Search Query	DBs	Default Operator	Plurals	Time Stamp
L1	2,696	e03d1/34.cpc.	US-PGPUB; USPAT; USOCR; FPRS; EPO; JPO; DERWENT	OR	OFF	2020/10/28 11:09
L2	2,083	b23p15/001.cpc.	US-PGPUB; USPAT; USOCR; FPRS; EPO; JPO; DERWENT	OR	OFF	2020/10/28 11:09
L3	84	(4/383).CCLS.	US-PGPUB; USPAT; USOCR	OR	OFF	2020/10/28 11:09
L4	4,855	L1 L2 L3	US-PGPUB; USPAT; USOCR; FPRS; EPO; JPO; DERWENT	OR	OFF	2020/10/28 11:09
L5	31	L4 and valve and snap and recess	US-PGPUB; USPAT; USOCR; FPRS; EPO; JPO; DERWENT	OR	OFF	2020/10/28 11:09
L6	39	(4/418).CCLS.	US-PGPUB; USPAT; USOCR	OR	OFF	2020/10/28 11:11
L7	4,894	L4 L6	US-PGPUB; USPAT; USOCR; FPRS; EPO; JPO; DERWENT	OR	OFF	2020/10/28 11:11
L8	31	L7 and valve and snap and recess	US-PGPUB; USPAT; USOCR; FPRS; EPO; JPO; DERWENT	OR	OFF	2020/10/28 11:11
L9	221	toilet and bowl and fill and valve and snap and (recess slot)	US-PGPUB; USPAT; USOCR; FPRS; EPO; JPO; DERWENT	OR	OFF	2020/10/28 11:13

10/28/2020 11:15:55 AM
C:\Users\tnguyen25\Documents\EAST\Workspaces\16686328.wsp

IN THE UNITED STATES PATENT AND TRADEMARK OFFICE

In re the Application of:	Confirmation: 6118
Michael J. Schuster *et al.*	Art Unit: 3754
Application Number: 16/686,328	Examiner: NGUYEN, TUAN N.
Filing Date: November 18, 2019	Docket No.: 171401-1037

For: **TOILET VALVE**

INTERVIEW SUMMARY
AND COMMENTS REGARDING TERMINAL DISCLAIMER

I. SUMMARY OF EXAMINER-INITIATED INTERVIEW

On October 14, 2020, Examiner Nguyen and Applicant's Representative, David Pointer (Reg. No. 73,654), conducted an Examiner-initiated telephonic interview. During the interview, Examiner Nguyen indicated that the only outstanding rejections for the present application are the double patenting rejections asserted on page 8 of the Office Action dated July 1, 2020 ("the Office Action"). Examiner Nguyen further indicated that he would allow the present application upon the filing of a terminal disclaimer addressing the patents identified in the Office Action. Applicant indicated that it would submit such a terminal disclaimer.

Applicant thanks Examiner Nguyen for his time and consideration.

II. APPLICANT HAS FILED A TERMINAL DISCLAIMER

Page 8 of the Office Action indicates that claims 1-8, 12-14, 17, 19, 22, and 25 have been rejected on the ground of non-statutory obviousness-type double patenting in view of claim 1 of U.S. Patent No. 7,743,436; claims 1-10 of U.S. Patent No. 8,104,105; claims 1-20 of U.S. Patent No. 8,650,671; claims 1-24 of U.S. Patent No. 9,103,105; claims 1-20 of U.S. Patent No.

9,139,993; and claims 1-18 of U.S. Patent No. 10,519,639. Applicant notes that claims 2, 13, 18, and 23 have been canceled, thereby rendering the rejections of claims 2, 13, 18, and 23 moot.

Applicant has submitted a terminal disclaimer pursuant to 37 C.F.R. §1.321(c) in order to overcome these rejections. Applicant has submitted the terminal disclaimer solely to advance prosecution of the application, without conceding that any of the double patenting rejections is properly based. In filing the terminal disclaimer, Applicant relies upon the rulings of the Federal Circuit that the filing of such a terminal disclaimer does not act as an admission, acquiescence or estoppel on the merits of the obviousness issue. *See, e.g.*, *Quad Environmental Tech v. Union Sanitary Dist.*, 946 F.2d 870, 874-875 (Fed. Cir. 1991); and *Ortho Pharmaceutical Corp. v. Smith*, 959 F.2d 936, 941-942 (Fed. Cir. 1992).

Accordingly, Applicant respectfully requests that the double-patenting rejections be withdrawn and that the present application be allowed to issue.

If the Examiner has any questions, the Examiner is encouraged to telephone the undersigned attorney of Applicant.

Respectfully submitted,

/Robert D. Pointer/

Robert D. Pointer
Registration Number: 73,654

THOMAS | HORSTEMEYER, LLP
Customer Number 24504
(770) 933-9500

Electronic Acknowledgement Receipt

EFS ID:	40887557
Application Number:	16686328
International Application Number:	
Confirmation Number:	6118
Title of Invention:	TOILET VALVE
First Named Inventor/Applicant Name:	Michael J. Schuster
Customer Number:	24504
Filer:	Robert David Pointer/Sofia Miller
Filer Authorized By:	Robert David Pointer
Attorney Docket Number:	171401-1037
Receipt Date:	20-OCT-2020
Filing Date:	18-NOV-2019
Time Stamp:	12:27:49
Application Type:	Utility under 35 USC 111(a)

Payment information:

Submitted with Payment	no

File Listing:

Document Number	Document Description	File Name	File Size(Bytes)/ Message Digest	Multi Part /.zip	Pages (if appl.)
1	Applicant summary of interview with examiner	171401-1037__Interview_Summary_Oct_2020.pdf	116919 21c442d7536c68c0129e8e75b0c769567909bda3	no	2

Warnings:

Information:	
Total Files Size (in bytes):	116919

This Acknowledgement Receipt evidences receipt on the noted date by the USPTO of the indicated documents, characterized by the applicant, and including page counts, where applicable. It serves as evidence of receipt similar to a Post Card, as described in MPEP 503.

New Applications Under 35 U.S.C. 111
If a new application is being filed and the application includes the necessary components for a filing date (see 37 CFR 1.53(b)-(d) and MPEP 506), a Filing Receipt (37 CFR 1.54) will be issued in due course and the date shown on this Acknowledgement Receipt will establish the filing date of the application.
National Stage of an International Application under 35 U.S.C. 371
If a timely submission to enter the national stage of an international application is compliant with the conditions of 35 U.S.C. 371 and other applicable requirements a Form PCT/DO/EO/903 indicating acceptance of the application as a national stage submission under 35 U.S.C. 371 will be issued in addition to the Filing Receipt, in due course.
New International Application Filed with the USPTO as a Receiving Office
If a new international application is being filed and the international application includes the necessary components for an international filing date (see PCT Article 11 and MPEP 1810), a Notification of the International Application Number and of the International Filing Date (Form PCT/RO/105) will be issued in due course, subject to prescriptions concerning national security, and the date shown on this Acknowledgement Receipt will establish the international filing date of the application.

Doc Code: DIST.E.FILE **Document Description: Electronic Terminal Disclaimer - Filed**	PTO/SB/26 U.S. Patent and Trademark Office Department of Commerce

Electronic Petition Request	**TERMINAL DISCLAIMER TO OBVIATE A DOUBLE PATENTING REJECTION OVER A "PRIOR" PATENT**
Application Number	16686328
Filing Date	18-Nov-2019
First Named Inventor	Michael Schuster
Attorney Docket Number	171401-1037
Title of Invention	TOILET VALVE

☒ Filing of terminal disclaimer does not obviate requirement for response under 37 CFR 1.111 to outstanding Office Action

☒ This electronic Terminal Disclaimer is not being used for a Joint Research Agreement.

Owner	Percent Interest
Danco, Inc.	100%

The owner(s) with percent interest listed above in the instant application hereby disclaims, except as provided below, the terminal part of the statutory term of any patent granted on the instant application which would extend beyond the expiration date of the full statutory term of prior patent number(s)

7743436

8104105

8650671

9103105

9139993

10519639

as the term of said prior patent is presently shortened by any terminal disclaimer. The owner hereby agrees that any patent so granted on the instant application shall be enforceable only for and during such period that it and the prior patent are commonly owned. This agreement runs with any patent granted on the instant application and is binding upon the grantee, its successors or assigns.

In making the above disclaimer, the owner does not disclaim the terminal part of the term of any patent granted on the instant application that would extend to the expiration date of the full statutory term of the prior patent, "as the term of said prior patent is presently shortened by any terminal disclaimer," in the event that said prior patent later:
- expires for failure to pay a maintenance fee;
- is held unenforceable;
- is found invalid by a court of competent jurisdiction;
- is statutorily disclaimed in whole or terminally disclaimed under 37 CFR 1.321;
- has all claims canceled by a reexamination certificate;
- is reissued; or
- is in any manner terminated prior to the expiration of its full statutory term as presently shortened by any terminal disclaimer.

(●) Terminal disclaimer fee under 37 CFR 1.20(d) is included with Electronic Terminal Disclaimer request.

( ) I certify, in accordance with 37 CFR 1.4(d)(4), that the terminal disclaimer fee under 37 CFR 1.20(d) required for this terminal disclaimer has already been paid in the above-identified application.

Applicant claims the following fee status:

( ) Small Entity

( ) Micro Entity

(●) Regular Undiscounted

I hereby declare that all statements made herein of my own knowledge are true and that all statements made on information and belief are believed to be true; and further that these statements were made with the knowledge that willful false statements and the like so made are punishable by fine or imprisonment, or both, under Section 1001 of Title 18 of the United States Code and that such willful false statements may jeopardize the validity of the application or any patent issued thereon.

THIS PORTION MUST BE COMPLETED BY THE SIGNATORY OR SIGNATORIES

I certify, in accordance with 37 CFR 1.4(d)(4) that I am:

(●) An attorney or agent registered to practice before the Patent and Trademark Office who is of record in this application

Registration Number 73654

( ) A sole inventor

( ) A joint inventor; I certify that I am authorized to sign this submission on behalf of all of the inventors as evidenced by the power of attorney in the application

( ) A joint inventor; all of whom are signing this request

Signature	/Robert D. Pointer/
Name	Robert David Pointer

*Statement under 37 CFR 3.73(b) is required if terminal disclaimer is signed by the assignee (owner).
Form PTO/SB/96 may be used for making this certification. See MPEP § 324.

Electronic Patent Application Fee Transmittal

Application Number:	16686328
Filing Date:	18-Nov-2019
Title of Invention:	TOILET VALVE
First Named Inventor/Applicant Name:	Michael J. Schuster
Filer:	Robert David Pointer/Sofia Miller
Attorney Docket Number:	171401-1037

Filed as Large Entity

Filing Fees for Utility under 35 USC 111(a)

Description	Fee Code	Quantity	Amount	Sub-Total in USD($)
Basic Filing:				
STATUTORY OR TERMINAL DISCLAIMER	1814	1	170	170
Pages:				
Claims:				
Miscellaneous-Filing:				
Petition:				
Patent-Appeals-and-Interference:				
Post-Allowance-and-Post-Issuance:				

Description	Fee Code	Quantity	Amount	Sub-Total in USD($)
Extension-of-Time:				
Miscellaneous:				
		Total in USD ($)		**170**

Doc Code: DISQ.E.FILE
Document Description: Electronic Terminal Disclaimer – Approved

Application No.: 16686328

Filing Date: 18-Nov-2019

Applicant/Patent under Reexamination: Schuster

Electronic Terminal Disclaimer filed on October 20, 2020

☒ APPROVED

This patent is subject to a terminal disclaimer

☐ DISAPPROVED

Approved/Disapproved by: Electronic Terminal Disclaimer automatically approved by EFS-Web

U.S. Patent and Trademark Office

Electronic Acknowledgement Receipt

EFS ID:	40887511
Application Number:	16686328
International Application Number:	
Confirmation Number:	6118
Title of Invention:	TOILET VALVE
First Named Inventor/Applicant Name:	Michael J. Schuster
Customer Number:	24504
Filer:	Robert David Pointer/Sofia Miller
Filer Authorized By:	Robert David Pointer
Attorney Docket Number:	171401-1037
Receipt Date:	20-OCT-2020
Filing Date:	18-NOV-2019
Time Stamp:	11:05:32
Application Type:	Utility under 35 USC 111(a)

Payment information:

Submitted with Payment	yes
Payment Type	CARD
Payment was successfully received in RAM	$170
RAM confirmation Number	E20200JB05291573
Deposit Account	200778
Authorized User	Sofia Miller

The Director of the USPTO is hereby authorized to charge indicated fees and credit any overpayment as follows:

37 CFR 1.21 (Miscellaneous fees and charges)

File Listing:

Document Number	Document Description	File Name	File Size(Bytes)/ Message Digest	Multi Part /.zip	Pages (if appl.)
1	Terminal Disclaimer-Filed (Electronic)	eTerminal-Disclaimer.pdf	35504 37069177eed11b66f62b0973d98c30d331cfc971	no	3
Warnings:					
Information:					
2	Fee Worksheet (SB06)	fee-info.pdf	30309 3c97cef5ca8c8701a752260c7d627a3fd019ae27	no	2
Warnings:					
Information:					
		Total Files Size (in bytes):	65813		

This Acknowledgement Receipt evidences receipt on the noted date by the USPTO of the indicated documents, characterized by the applicant, and including page counts, where applicable. It serves as evidence of receipt similar to a Post Card, as described in MPEP 503.

New Applications Under 35 U.S.C. 111
If a new application is being filed and the application includes the necessary components for a filing date (see 37 CFR 1.53(b)-(d) and MPEP 506), a Filing Receipt (37 CFR 1.54) will be issued in due course and the date shown on this Acknowledgement Receipt will establish the filing date of the application.
National Stage of an International Application under 35 U.S.C. 371
If a timely submission to enter the national stage of an international application is compliant with the conditions of 35 U.S.C. 371 and other applicable requirements a Form PCT/DO/EO/903 indicating acceptance of the application as a national stage submission under 35 U.S.C. 371 will be issued in addition to the Filing Receipt, in due course.
New International Application Filed with the USPTO as a Receiving Office
If a new international application is being filed and the international application includes the necessary components for an international filing date (see PCT Article 11 and MPEP 1810), a Notification of the International Application Number and of the International Filing Date (Form PCT/RO/105) will be issued in due course, subject to prescriptions concerning national security, and the date shown on this Acknowledgement Receipt will establish the international filing date of the application.

United States Patent and Trademark Office

Office of the Chief Financial Officer

Document Code:WFEE

User :76537

Sale Accounting Date:10/13/2020

Sale Item Reference Number	Effective Date
16686328	10/08/2020

Document Number	Fee Code	Fee Code Description	Amount Paid	Payment Method
I20200CC52196733	1251	EXTENSION FOR RESPONSE WITHIN 1ST MONTH	$220.00	Deposit Account

PTO/SB/30EFS (02-18)
Approved for use through 11/30/2020. OMB 0651-0031
U.S. Patent and Trademark Office; U.S. DEPARTMENT OF COMMERCE
Under the Paperwork Reduction Act of 1995, no persons are required to respond to a collection of information unless it contains a valid OMB control number.

REQUEST FOR CONTINUED EXAMINATION(RCE)TRANSMITTAL
(Submitted Only via EFS-Web)

Application Number	16/686,328	Filing Date	2019-11-18	Docket Number (if applicable)	171401-1037	Art Unit	3754
First Named Inventor	Michael J. Schuster			Examiner Name	NGUYEN, TUAN N.		

This is a Request for Continued Examination (RCE) under 37 CFR 1.114 of the above-identified application.
Request for Continued Examination (RCE) practice under 37 CFR 1.114 does not apply to any utility or plant application filed prior to June 8, 1995, or to any design application. The Instruction Sheet for this form is located at WWW.USPTO.GOV

SUBMISSION REQUIRED UNDER 37 CFR 1.114

Note: If the RCE is proper, any previously filed unentered amendments and amendments enclosed with the RCE will be entered in the order in which they were filed unless applicant instructs otherwise. If applicant does not wish to have any previously filed unentered amendment(s) entered, applicant must request non-entry of such amendment(s).

☐ Previously submitted. If a final Office action is outstanding, any amendments filed after the final Office action may be considered as a submission even if this box is not checked.

- ☐ Consider the arguments in the Appeal Brief or Reply Brief previously filed on _____
- ☐ Other _____

☒ Enclosed

- ☒ Amendment/Reply
- ☐ Information Disclosure Statement (IDS)
- ☐ Affidavit(s)/ Declaration(s)
- ☐ Other _____

MISCELLANEOUS

☐ Suspension of action on the above-identified application is requested under 37 CFR 1.103(c) for a period of months _____
(Period of suspension shall not exceed 3 months; Fee under 37 CFR 1.17(i) required)

☐ Other _____

FEES

☒ **The RCE fee under 37 CFR 1.17(e) is required by 37 CFR 1.114 when the RCE is filed.**
The Director is hereby authorized to charge any underpayment of fees, or credit any overpayments, to
Deposit Account No 200778

SIGNATURE OF APPLICANT, ATTORNEY, OR AGENT REQUIRED

X Patent Practitioner Signature
Applicant Signature

PTO/SB/30EFS (02-18)
Approved for use through 11/30/2020. OMB 0651-0031
U.S. Patent and Trademark Office; U.S. DEPARTMENT OF COMMERCE
Under the Paperwork Reduction Act of 1995, no persons are required to respond to a collection of information unless it contains a valid OMB control number.

Signature of Registered U.S. Patent Practitioner			
Signature	/RDP/	Date (YYYY-MM-DD)	2020-10-08
Name	R. David Pointer	Registration Number	73654

This collection of information is required by 37 CFR 1.114. The information is required to obtain or retain a benefit by the public which is to file (and by the USPTO to process) an application. Confidentiality is governed by 35 U.S.C. 122 and 37 CFR 1.11 and 1.14. This collection is estimated to take 12 minutes to complete, including gathering, preparing, and submitting the completed application form to the USPTO. Time will vary depending upon the individual case. Any comments on the amount of time you require to complete this form and/or suggestions for reducing this burden, should be sent to the Chief Information Officer, U.S. Patent and Trademark Office, U.S. Department of Commerce, P.O. Box 1450, Alexandria, VA 22313-1450.

If you need assistance in completing the form, call 1-800-PTO-9199 and select option 2.

Privacy Act Statement

The Privacy Act of 1974 (P.L. 93-579) requires that you be given certain information in connection with your submission of the attached form related to a patent application or patent. Accordingly, pursuant to the requirements of the Act, please be advised that: (1) the general authority for the collection of this information is 35 U.S.C. 2(b)(2); (2) furnishing of the information solicited is voluntary; and (3) the principal purpose for which the information is used by the U.S. Patent and Trademark Office is to process and/or examine your submission related to a patent application or patent. If you do not furnish the requested information, the U.S. Patent and Trademark Office may not be able to process and/or examine your submission, which may result in termination of proceedings or abandonment of the application or expiration of the patent.

The information provided by you in this form will be subject to the following routine uses:

1. The information on this form will be treated confidentially to the extent allowed under the Freedom of Information Act (5 U.S.C. 552) and the Privacy Act (5 U.S.C. 552a). Records from this system of records may be disclosed to the Department of Justice to determine whether the Freedom of Information Act requires disclosure of these records.

2. A record from this system of records may be disclosed, as a routine use, in the course of presenting evidence to a court, magistrate, or administrative tribunal, including disclosures to opposing counsel in the course of settlement negotiations.

3. A record in this system of records may be disclosed, as a routine use, to a Member of Congress submitting a request involving an individual, to whom the record pertains, when the individual has requested assistance from the Member with respect to the subject matter of the record.

4. A record in this system of records may be disclosed, as a routine use, to a contractor of the Agency having need for the information in order to perform a contract. Recipients of information shall be required to comply with the requirements of the Privacy Act of 1974, as amended, pursuant to 5 U.S.C. 552a(m).

5. A record related to an International Application filed under the Patent Cooperation Treaty in this system of records may be disclosed, as a routine use, to the International Bureau of the World Intellectual Property Organization, pursuant to the Patent Cooperation Treaty.

6. A record in this system of records may be disclosed, as a routine use, to another federal agency for purposes of National Security review (35 U.S.C. 181) and for review pursuant to the Atomic Energy Act (42 U.S.C. 218(c)).

7. A record from this system of records may be disclosed, as a routine use, to the Administrator, General Services, or his/her designee, during an inspection of records conducted by GSA as part of that agency's responsibility to recommend improvements in records management practices and programs, under authority of 44 U.S.C. 2904 and 2906. Such disclosure shall be made in accordance with the GSA regulations governing inspection of records for this purpose, and any other relevant (i.e., GSA or Commerce) directive. Such disclosure shall not be used to make determinations about individuals.

8. A record from this system of records may be disclosed, as a routine use, to the public after either publication of the application pursuant to 35 U.S.C. 122(b) or issuance of a patent pursuant to 35 U.S.C. 151. Further, a record may be disclosed, subject to the limitations of 37 CFR 1.14, as a routine use, to the public if the record was filed in an application which became abandoned or in which the proceedings were terminated and which application is referenced by either a published application, an application open to public inspections or an issued patent.

9. A record from this system of records may be disclosed, as a routine use, to a Federal, State, or local law enforcement agency, if the USPTO becomes aware of a violation or potential violation of law or regulation.

Electronic Patent Application Fee Transmittal

Application Number:	16686328
Filing Date:	18-Nov-2019
Title of Invention:	TOILET VALVE
First Named Inventor/Applicant Name:	Michael J. Schuster
Filer:	Robert David Pointer/Sofia Miller
Attorney Docket Number:	171401-1037

Filed as Large Entity

Filing Fees for Utility under 35 USC 111(a)

Description	Fee Code	Quantity	Amount	Sub-Total in USD($)
Basic Filing:				
Pages:				
Claims:				
Miscellaneous-Filing:				
Petition:				
Patent-Appeals-and-Interference:				
Post-Allowance-and-Post-Issuance:				
Extension-of-Time:				

Description	Fee Code	Quantity	Amount	Sub-Total in USD($)
Miscellaneous:				
RCE- 1ST REQUEST	1801	1	1360	1360
		Total in USD ($)		**1360**

Electronic Acknowledgement Receipt

EFS ID:	40793037
Application Number:	16686328
International Application Number:	
Confirmation Number:	6118
Title of Invention:	TOILET VALVE
First Named Inventor/Applicant Name:	Michael J. Schuster
Customer Number:	24504
Filer:	Robert David Pointer/Sofia Miller
Filer Authorized By:	Robert David Pointer
Attorney Docket Number:	171401-1037
Receipt Date:	08-OCT-2020
Filing Date:	18-NOV-2019
Time Stamp:	22:08:29
Application Type:	Utility under 35 USC 111(a)

Payment information:

Submitted with Payment	yes
Payment Type	CARD
Payment was successfully received in RAM	$1360
RAM confirmation Number	E202008M09409467
Deposit Account	200778
Authorized User	Sofia Miller

The Director of the USPTO is hereby authorized to charge indicated fees and credit any overpayment as follows:

37 CFR 1.21 (Miscellaneous fees and charges)

File Listing:

Document Number	Document Description	File Name	File Size(Bytes)/ Message Digest	Multi Part /.zip	Pages (if appl.)
1	Response After Final Action	171401-1037__Response_to_Final_Office_Action.pdf	198989 50bfaee7f92ebcc4ab33dba2c6b50d41971d0e2c	no	14
Warnings:					
Information:					
2	Request for Continued Examination (RCE)	171401-1037__RCE_Transmittal.pdf	1350172 79447a312174493dec2b1173b878d1fea5cd711c	no	3
Warnings:					
Information:					
3	Fee Worksheet (SB06)	fee-info.pdf	30388 4de838c669ed0c546db00970b28f206fef7ae857	no	2
Warnings:					
Information:					
		Total Files Size (in bytes):	1579549		

This Acknowledgement Receipt evidences receipt on the noted date by the USPTO of the indicated documents, characterized by the applicant, and including page counts, where applicable. It serves as evidence of receipt similar to a Post Card, as described in MPEP 503.

<u>New Applications Under 35 U.S.C. 111</u>
If a new application is being filed and the application includes the necessary components for a filing date (see 37 CFR 1.53(b)-(d) and MPEP 506), a Filing Receipt (37 CFR 1.54) will be issued in due course and the date shown on this Acknowledgement Receipt will establish the filing date of the application.
<u>National Stage of an International Application under 35 U.S.C. 371</u>
If a timely submission to enter the national stage of an international application is compliant with the conditions of 35 U.S.C. 371 and other applicable requirements a Form PCT/DO/EO/903 indicating acceptance of the application as a national stage submission under 35 U.S.C. 371 will be issued in addition to the Filing Receipt, in due course.
<u>New International Application Filed with the USPTO as a Receiving Office</u>
If a new international application is being filed and the international application includes the necessary components for an international filing date (see PCT Article 11 and MPEP 1810), a Notification of the International Application Number and of the International Filing Date (Form PCT/RO/105) will be issued in due course, subject to prescriptions concerning national security, and the date shown on this Acknowledgement Receipt will establish the international filing date of the application.

IN THE UNITED STATES PATENT AND TRADEMARK OFFICE

In re the Application of:	Confirmation: 6118
Michael J. Schuster *et al.*	Art Unit: 3754
Application Number: 16/686,328	Examiner: NGUYEN, TUAN N.
Filing Date: November 18, 2019	Docket No.: 171401-1037

For: **TOILET VALVE**

RESPONSE TO FINAL OFFICE ACTION DATED JULY 1, 2020

Mail Stop: RCE
Commissioner for Patents
P.O. Box 1450
Alexandria, VA 22313-1450

Sir/Madam:

With respect to the outstanding final Office Action dated July 1, 2020 ("the Office Action"), the following Response is submitted along with a Request for Continued Examination.

It is believed that no extensions of time or fees for net addition of claims are required beyond those that may otherwise be provided for in documents accompanying this paper. However, if additional extensions of time are necessary to prevent abandonment of this application, then such extensions of time are hereby petitioned under 37 C.F.R. § 1.136(a), and any fees required therefor (including, but not limited to, fees for net addition of claims) are hereby authorized to be charged to Deposit Account No. 20-0778.

AMENDMENTS

IN THE CLAIMS:

Please amend the claims as indicated below. The language being added is underlined ("__"), and the language being deleted contains strikethrough ("—") or is enclosed by double brackets ("[[ ]]").

1. (Currently Amended) A toilet system, comprising:

a toilet fill valve that comprises:

a body comprising an extended portion that forms a bowl fill outlet port;

a water inlet configured to couple to a water source; and

a tank water outlet configured to output water to a toilet tank;

a bowl fill valve configured to attach directly to the body of the toilet fill valve, the bowl fill valve comprising:

a bowl fill valve inlet port configured to mate directly to the bowl fill outlet port of the body of the toilet fill valve;

a bowl fill valve outlet port;

a protrusion configured to insert into a recess of the toilet fill valve and retain the bowl fill valve to the toilet fill valve, the protrusion being configured to snap fit into the recess; [[and]]

a water flow adjustment handle; <u>and</u>

<u>a slot configured to receive an extension of the toilet fill valve and prevent rotation of the bowl fill valve relative to the toilet fill valve;</u> and

a tube configured to attach directly to the bowl fill valve outlet port of the bowl fill valve.

2. (Canceled)

3. (Original) The toilet system of claim 1, wherein the bowl fill outlet port comprises a male end, and wherein the bowl fill valve inlet port comprises a female receptacle for the male end of the bowl fill outlet port.

4. (Currently Amended) The toilet system of claim [[2]] 1, wherein the protrusion of the bowl fill valve is an annular protrusion located on a bowl fill valve side wall of the bowl fill valve, wherein the recess of the toilet fill valve is an annular recess located on a bowl fill outlet port side wall of the bowl fill outlet port, wherein the slot of the bowl fill valve is located on the bowl fill valve side wall, and wherein the extension of the toilet fill valve is a rib on the bowl fill outlet port side wall.

5. (Original) The toilet system of claim 1, wherein the bowl fill outlet port extends radially from a longitudinal axis of the body of the toilet fill valve.

6. (Original) The toilet system of claim 5, wherein the toilet fill valve further comprises an actuation arm that extends radially from the longitudinal axis of the body of the toilet fill valve, and wherein the actuation arm is angularly offset relative to the bowl fill outlet port.

7. (Original) The toilet system of claim 1, wherein the toilet fill valve further comprises a float configured to move along at least a portion of the body of the toilet fill valve.

8. (Previously Presented) The toilet system of claim 7, wherein the at least a portion of the body of the toilet fill valve extends through the float.

9. (Canceled)

10. (Canceled)

11. (Canceled)

12. (Currently Amended) A bowl fill valve, comprising:

a bowl fill valve inlet port configured to mate directly to a bowl fill outlet port of a body of a toilet fill valve;

a bowl fill valve outlet port configured to attach directly to a tube that provides water from the bowl fill valve outlet port to an overflow tube;

a protrusion configured to insert into a recess of the toilet fill valve and retain the bowl fill valve to the toilet fill valve, the protrusion being configured to snap fit into the recess;

a slot configured to receive an extension of the toilet fill valve and prevent rotation of the bowl fill valve relative to the toilet fill valve; and

a water flow adjustment handle being configured to adjust water flow from the bowl fill valve inlet port to the bowl fill valve outlet port.

13. (Canceled)

14. (Original) The bowl fill valve of claim 12, wherein the bowl fill valve inlet port comprises a female receptacle for a male end of the bowl fill outlet port.

15. (Canceled)

16. (Canceled)

17. (Currently Amended) A method, comprising:

coupling a water inlet of a toilet fill valve to a water source;

attaching a bowl fill valve directly to a body of the toilet fill valve by at least:

mating a bowl fill valve inlet port of the bowl fill valve directly to a bowl fill outlet port that extends from the body of the toilet fill valve; [[and]]

snap fitting a protrusion of the bowl fill valve into a recess of the toilet fill valve; and

inserting an extension of the toilet fill valve into a slot of the bowl fill valve, wherein the slot is configured to prevent rotation of the bowl fill valve relative to the toilet fill valve; and

attaching a tube directly to a bowl fill valve outlet port of the bowl fill valve.

18. (Canceled)

19. (Original) The method of claim 17, further comprising adjusting a flow of water out of the bowl fill valve.

20. (Canceled)

21. (Canceled)

22. (Currently Amended) A bowl fill valve, comprising:

a bowl fill valve inlet port configured to mate directly to a bowl fill outlet port of a body of a toilet fill valve;

a bowl fill valve outlet port configured to attach directly to a tube that provides water from the bowl fill valve outlet port to an overflow tube;

a protrusion on the bowl fill valve configured to snap fit into a recess of the toilet fill valve and retain the bowl fill valve to the toilet fill valve;

a slot configured to receive an extension of the toilet fill valve and prevent rotation of the bowl fill valve relative to the toilet fill valve; and

means for adjusting water flow out of the bowl fill valve outlet port.

23. (Canceled)

24. (Canceled)

25. (Original) The bowl fill valve of claim 22, wherein the means for adjusting water flow out of the bowl fill valve outlet port comprises an adjustment handle.

26. (New) The toilet system of claim 1, wherein the bowl fill valve inlet port is configured to be inserted within a portion of the bowl fill outlet port.

REMARKS

As of entry of this Response, claims 1, 3-8, 12, 14, 17, 19, 22, 25, and 26 remain pending in the present application. Claims 1, 4, 12, 17, and 22 are currently amended, and claim 26 is newly added. Claims 2, 13, 18, and 23 are canceled without prejudice, disclaimer, or waiver. Applicant reserves the right to present these claims, or variants thereof, in continuing applications.

I. DOUBLE PATENTING REJECTIONS FOR CLAIMS 1, 3-8, 12, 14, 17, 19, 22, AND 25

Page 8 of the Office Action indicates that claims 1-8, 12-14, 17, 19, 22, and 25 are rejected on the ground of nonstatutory obviousness-type double patenting as allegedly being unpatentable over claim 1 of U.S. Patent No. 7,743,436; claims 1-10 of U.S. Patent No. 8,104,105; claims 1-20 of U.S. Patent No. 8,650,671; claims 1-24 of U.S. Patent No. 9,103,105; claims 1-20 of U.S. Patent No. 9,139,993; and claims 1-18 of U.S. Patent No. 10,519,639. Applicant notes that claims 2, 13, 18, and 23 have been canceled, thereby rendering this rejections moot with respect to such claims. With respect to the rejection of currently pending claims 1, 3-8, 12, 14, 17, 19, 22, and 25 under the doctrine of non-statutory obviousness-type double patenting, Applicant respectfully requests that the rejections be held in abeyance until it is the only rejection outstanding in accordance with MPEP § 714.02 and 37 C.F.R. § 1.111(b), as the claims may be further examined notwithstanding the rejection.

II. CLAIM 1, 3-7, 12, 14, 17, 19, 22, AND 25 ARE PATENTABLE OVER *DEMARCO* AND *BJERKE*

Page 2 of the Office Action indicates that claims 1-7, 12-14, 17-19, 22, 23, and 25 have been rejected under 35 U.S.C. § 103(a) as allegedly being obvious in view of U.S. Patent No. 5,708,991, issued to DeMarco (hereinafter "*DeMarco*") and U.S. Patent No. 5,926,868, issued to Bjerke (hereinafter "*Bjerke*"). Applicant notes that claims 2, 13, 18, and 23 have been canceled, thereby rendering this rejection moot with respect to such claims. In order to establish a *prima facie* case of obviousness under 35 U.S.C. § 103, the Examiner must show that each and every element of the claim is described or suggested by the prior art or would have been obvious in view of the prior art. *See In re Fine*, 837 F.2d 1071, 1073-1074 (Fed. Cir. 1988); *Ex Parte Wada and Murphy*, Appeal 2007-3733 (BPAI 2008); *See also, KSR Int'l v. Teleflex, Inc.*, 550 U.S. 398, 411 (2007) (claim deemed obvious to one of ordinary skill where all claim elements were disclosed in the cited prior art references). In addition, "[r]ejections on obviousness grounds cannot be sustained by mere conclusory statements; instead, there must be some articulated reasoning with some rational underpinning to support the legal conclusion of obviousness." *KSR Int'l*, 550 U.S. at 418 (quoting *In re Kahn*, 441 F.3d 977, 988 (Fed. Cir. 2006)). Applicant respectfully requests that the rejections of claims 1, 3-7, 12, 14, 17, 19, 22, and 25 be withdrawn for at least the following reasons.

A. Claims 1 and 3-7

Applicant respectfully submits that the above-cited references, either alone or in combination, fail to show or suggest at least the following emphasized element of claim 1:

> A toilet system, comprising:
> a toilet fill valve that comprises:
> a body comprising an extended portion that forms a bowl fill outlet port;
> a water inlet configured to couple to a water source; and
> a tank water outlet configured to output water to a toilet tank;
> a bowl fill valve configured to attach directly to the body of the toilet fill valve, the bowl fill valve comprising:
> a bowl fill valve inlet port configured to mate directly to the bowl fill outlet port of the body of the toilet fill valve;
> a bowl fill valve outlet port;
> a protrusion configured to insert into a recess of the toilet fill valve and retain the bowl fill valve to the toilet fill valve, the protrusion being configured to snap fit into the recess;
> a water flow adjustment handle; and
> ***a slot configured to receive an extension of the toilet fill valve and prevent rotation of the bowl fill valve relative to the toilet fill valve***; and
> a tube configured to attach directly to the bowl fill valve outlet port of the bowl fill valve.

Applicant notes that claim 1 has been amended to include subject matter similar to claim 2.

In rejecting claim 2, the Office Action (p. 3) alleges:

> Regarding claim 2, the above combination would provide the bowl fill valve with a slot (the slot between 34 and 16 in Fig. 2 of Bjerke) configured to receive an extension (the rectangular broken lines within 24 in Fig. 3 of Bjerke) of the toilet fill valve.

As outlined in the Abstract, *Bjerke* relates to "a fitting for screwthreaded connection to the bathtub faucet." As quoted above, the Office Action alleges that the slot of amended claim 1 corresponds to an alleged slot between the annular shoulder 34 and the fitting 16 of *Bjerke*. FIG. 2 of *Bjerke* is reproduced below:

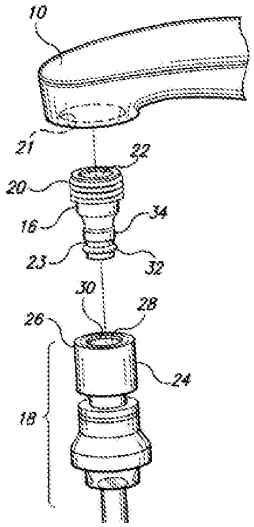

First, Applicant notes that the cited portions of *Bjerke* fail to show or suggest a slot configured to "receive an extension of the toilet fill valve," as recited in amended claim 1. Particularly, Applicant points out that the second portion 24 of the backflow prevent assembly 18 does not correspond to the "toilet fill valve" of claim 1 because the backflow prevent assembly 18 of *Bjerke* does not serve as a substitute for the toilet fill valve of claim 1. As such, *Bjerke* fails to show or suggest a slot that "receive[s] an extension of the toilet fill valve," as recited in amended claim 1.

Second, Applicant asserts that the cited portions of *Bjerke* fail to show or suggest "a slot configured to ... prevent rotation of the bowl fill valve relative to the toilet fill valve," as recited in amended claim 1. *Bjerke* appears to be silent with regard to the area between the annular shoulder 34 and the fitting 16 of *Bjerke*, and it does not disclose or suggest it being configured to "prevent rotation of the bowl fill valve relative to the toilet fill valve," as recited in amended claim 1. Therefore, *Bjerke* does not disclose or suggest at least these elements of claim 1.

Additionally, *DeMarco* does not show or suggest these claim elements, nor does the Office Action rely on *DeMarco* to allege that these claim elements are shown or suggested. Since *DeMarco* and *Bjerke* fail to disclose the above-recited elements individually, it follows that the combination of the cited references fails to disclose or suggest all of the elements of claim 1.

For at least these reasons, Applicant respectfully requests that the rejection of claim 1 be withdrawn. In addition, Applicant respectfully requests that the rejection of claims 3-7 be withdrawn as depending from claim 1. Applicant notes that claims 3-7 may also be patentable for the additional elements that each recites.

B. Claims 12, 14, 17, 19, 22, and 25

Insofar as independent claims 12, 17, and 22 recite features similar to those set forth in independent claim 1, Applicant respectfully requests that the rejections of claims 12, 17, and 22 be withdrawn for at least similar reasons, to the extent applicable. Applicant respectfully requests that the rejections of claims 14 19, 22, and 25 be withdrawn as depending from claims 12, 17, and 22. Applicant notes that claims 14 19, 22, and 25 may be patentable for at least the additional elements that they recite.

III. NEWLY ADDED CLAIM

Claim 26 is newly added herein to claim additional embodiments. Applicant respectfully submits that no new subject matter has been added and that claim 26 is patentable for at least the same reasons as the independent claim from which it depends. In addition, claim 26 is believed to be patentable for the additional elements that it recites.

IV. NO WAIVER

Applicant's arguments and amendments are without prejudice or disclaimer. Applicant has not addressed each specific element of the independent claims, or each rejection of the dependent claims, because Applicant submits that the independent claims are allowable over the documents of record for at least the reasons discussed above. Applicant has not acquiesced to any rejections or assertions in the Office Action and reserves the right to address the patentability of any additional claim features in the future.

CONCLUSION

It is requested that all outstanding objections and rejections be withdrawn and that this application and all presently pending claims be allowed to issue. If the Examiner has any questions or comments regarding this Response, the Examiner is encouraged to telephone the undersigned attorney of Applicant.

Respectfully submitted,

/Robert D. Pointer/

Robert D. Pointer
Registration Number: 73,654

THOMAS | HORSTEMEYER, LLP
Customer Number 24504
(770) 933-9500

PTO/SB/06 (09-11)
Approved for use through 1/31/2014. OMB 0651-0032
U.S. Patent and Trademark Office; U.S. DEPARTMENT OF COMMERCE
Under the Paperwork Reduction Act of 1995, no persons are required to respond to a collection of information unless it displays a valid OMB control number.

PATENT APPLICATION FEE DETERMINATION RECORD Substitute for Form PTO-875	Application or Docket Number 16/686,328	Filing Date 11/18/2019	☐ To be Mailed

ENTITY: ☑ LARGE ☐ SMALL ☐ MICRO

APPLICATION AS FILED - PART I

FOR	(Column 1) NUMBER FILED	(Column 2) NUMBER EXTRA		RATE ($)	FEE ($)
☐ BASIC FEE (37 CFR 1.16(a), (b), or (c))	N/A	N/A		N/A	
☐ SEARCH FEE (37 CFR 1.16(k), (i), or (m))	N/A	N/A		N/A	
☐ EXAMINATION FEE (37 CFR 1.16(o), (p), or (q))	N/A	N/A		N/A	
TOTAL CLAIMS (37 CFR 1.16(i))	minus 20 =	*		x $100 =	
INDEPENDENT CLAIMS (37 CFR 1.16(h))	minus 3 =	*		x $460 =	
☐ APPLICATION SIZE FEE (37 CFR 1.16(s))	If the specification and drawings exceed 100 sheets of paper, the application size fee due is $310 ($155 for small entity) for each additional 50 sheets or fraction thereof. See 35 U.S.C. 41(a)(1)(G) and 37 CFR 1.16(s).				
☐ MULTIPLE DEPENDENT CLAIM PRESENT (37 CFR 1.16(j))					
* If the difference in column 1 is less than zero, enter "0" in column 2.				TOTAL	

APPLICATION AS AMENDED - PART II

AMENDMENT	10/08/2020	(Column 1) CLAIMS REMAINING AFTER AMENDMENT		(Column 2) HIGHEST NUMBER PREVIOUSLY PAID FOR	(Column 3) PRESENT EXTRA		RATE ($)	ADDITIONAL FEE ($)
	Total (37 CFR 1.16(i))	* 14	Minus	** 25	= 0		x $100 =	0
	Independent (37 CFR 1.16(h))	* 4	Minus	*** 4	= 0		x $480 =	0
	☐ Application Size Fee (37 CFR 1.16(s))							
	☐ FIRST PRESENTATION OF MULTIPLE DEPENDENT CLAIM (37 CFR 1.16(j))							
							TOTAL ADD'L FEE	0

AMENDMENT		(Column 1) CLAIMS REMAINING AFTER AMENDMENT		(Column 2) HIGHEST NUMBER PREVIOUSLY PAID FOR	(Column 3) PRESENT EXTRA		RATE ($)	ADDITIONAL FEE ($)
	Total (37 CFR 1.16(i))	*	Minus	**	=		x $0 =	
	Independent (37 CFR 1.16(h))	*	Minus	***	=		x $0 =	
	☐ Application Size Fee (37 CFR 1.16(s))							
	☐ FIRST PRESENTATION OF MULTIPLE DEPENDENT CLAIM (37 CFR 1.16(j))							
							TOTAL ADD'L FEE	

* If the entry in column 1 is less than the entry in column 2, write "0" in column 3.	LIE
** If the "Highest Number Previously Paid For" IN THIS SPACE is less than 20, enter "20".	/THUY T TA/
*** If the "Highest Number Previously Paid For" IN THIS SPACE is less than 3, enter "3".	
The "Highest Number Previously Paid For" (Total or Independent) is the highest number found in the appropriate box in column 1.	

This collection of information is required by 37 CFR 1.16. The information is required to obtain or retain a benefit by the public which is to file (and by the USPTO to process) an application. Confidentiality is governed by 35 U.S.C. 122 and 37 CFR 1.14. This collection is estimated to take 12 minutes to complete, including gathering, preparing, and submitting the completed application form to the USPTO. Time will vary depending upon the individual case. Any comments on the amount of time you require to complete this form and/or suggestions for reducing this burden, should be sent to the Chief Information Officer, U.S. Patent and Trademark Office, U.S. Department of Commerce, P.O. Box 1450, Alexandria, VA 22313-1450. DO NOT SEND FEES OR COMPLETED FORMS TO THIS ADDRESS. **SEND TO: Commissioner for Patents, P.O. Box 1450, Alexandria, VA 22313-1450.**

If you need assistance in completing the form, call 1-800-PTO-9199 and select option 2.

UNITED STATES PATENT AND TRADEMARK OFFICE

UNITED STATES DEPARTMENT OF COMMERCE
United States Patent and Trademark Office
Address: COMMISSIONER FOR PATENTS
P.O. Box 1450
Alexandria, Virginia 22313-1450
www.uspto.gov

APPLICATION NO.	FILING DATE	FIRST NAMED INVENTOR	ATTORNEY DOCKET NO.	CONFIRMATION NO.
16/686,328	11/18/2019	Michael J. Schuster	171401-1037	6118

24504 7590 07/01/2020
THOMAS | HORSTEMEYER, LLP
3200 WINDY HILL ROAD, SE
SUITE 1600E
ATLANTA, GA 30339

EXAMINER
NGUYEN, TUAN N

ART UNIT	PAPER NUMBER
3754	

NOTIFICATION DATE	DELIVERY MODE
07/01/2020	ELECTRONIC

Please find below and/or attached an Office communication concerning this application or proceeding.

The time period for reply, if any, is set in the attached communication.

Notice of the Office communication was sent electronically on above-indicated "Notification Date" to the following e-mail address(es):

docketing@thomashorstemeyer.com
ozzie.liggins@tkhr.com
uspatents@tkhr.com

PTOL-90A (Rev. 04/07)

Office Action Summary	Application No. 16/686,328	Applicant(s) Schuster et al.	
	Examiner TUAN N NGUYEN	Art Unit 3754	AIA (FITF) Status No

-- The MAILING DATE of this communication appears on the cover sheet with the correspondence address --

Period for Reply

A SHORTENED STATUTORY PERIOD FOR REPLY IS SET TO EXPIRE 3 MONTHS FROM THE MAILING DATE OF THIS COMMUNICATION.

- Extensions of time may be available under the provisions of 37 CFR 1.136(a). In no event, however, may a reply be timely filed after SIX (6) MONTHS from the mailing date of this communication.
- If NO period for reply is specified above, the maximum statutory period will apply and will expire SIX (6) MONTHS from the mailing date of this communication.
- Failure to reply within the set or extended period for reply will, by statute, cause the application to become ABANDONED (35 U.S.C. § 133). Any reply received by the Office later than three months after the mailing date of this communication, even if timely filed, may reduce any earned patent term adjustment. See 37 CFR 1.704(b).

Status

1)☑ Responsive to communication(s) filed on 15 April 2020.

☐ A declaration(s)/affidavit(s) under **37 CFR 1.130(b)** was/were filed on _____.

2a)☑ This action is **FINAL.** 2b) ☐ This action is non-final.

3)☐ An election was made by the applicant in response to a restriction requirement set forth during the interview on _____; the restriction requirement and election have been incorporated into this action.

4)☐ Since this application is in condition for allowance except for formal matters, prosecution as to the merits is closed in accordance with the practice under *Ex parte Quayle*, 1935 C.D. 11, 453 O.G. 213.

Disposition of Claims*

5) ☑ Claim(s) 1-8,12-14,17-19,22-23 and 25 is/are pending in the application.

5a) Of the above claim(s) _____ is/are withdrawn from consideration.

6) ☐ Claim(s) _____ is/are allowed.

7) ☑ Claim(s) 1-8,12-14,17-19,22-23 and 25 is/are rejected.

8) ☐ Claim(s) _____ is/are objected to.

9) ☐ Claim(s) _____ are subject to restriction and/or election requirement

* If any claims have been determined allowable, you may be eligible to benefit from the **Patent Prosecution Highway** program at a participating intellectual property office for the corresponding application. For more information, please see http://www.uspto.gov/patents/init_events/pph/index.jsp or send an inquiry to **PPHfeedback@uspto.gov.**

Application Papers

10)☐ The specification is objected to by the Examiner.

11)☐ The drawing(s) filed on _____ is/are: a)☐ accepted or b)☐ objected to by the Examiner.

Applicant may not request that any objection to the drawing(s) be held in abeyance. See 37 CFR 1.85(a).

Replacement drawing sheet(s) including the correction is required if the drawing(s) is objected to. See 37 CFR 1.121(d).

Priority under 35 U.S.C. § 119

12)☐ Acknowledgment is made of a claim for foreign priority under 35 U.S.C. § 119(a)-(d) or (f).

Certified copies:

a)☐ All b)☐ Some** c)☐ None of the:

1.☐ Certified copies of the priority documents have been received.

2.☐ Certified copies of the priority documents have been received in Application No. _____.

3.☐ Copies of the certified copies of the priority documents have been received in this National Stage application from the International Bureau (PCT Rule 17.2(a)).

** See the attached detailed Office action for a list of the certified copies not received.

Attachment(s)

1) ☐ Notice of References Cited (PTO-892)

2) ☐ Information Disclosure Statement(s) (PTO/SB/08a and/or PTO/SB/08b) Paper No(s)/Mail Date _____.

3) ☐ Interview Summary (PTO-413) Paper No(s)/Mail Date _____.

4) ☐ Other: _____.

DETAILED ACTION

The present application is being examined under the pre-AIA first to invent provisions.

Response to Arguments

Applicant's arguments with respect to the claims have been considered but are moot because the arguments do not apply to the combination of the references being used in the current rejection.

Claim Rejections - 35 USC § 103

The following is a quotation of 35 U.S.C. 103(a) which forms the basis for all obviousness rejections set forth in this Office action:

> (a) A patent may not be obtained though the invention is not identically disclosed or described as set forth in section 102 of this title, if the differences between the subject matter sought to be patented and the prior art are such that the subject matter as a whole would have been obvious at the time the invention was made to a person having ordinary skill in the art to which said subject matter pertains. Patentability shall not be negatived by the manner in which the invention was made.

Claims 1-7, 12-14, 17-19, 22, 23, and 25 are rejected under 35 U.S.C. 103(a) as being unpatentable over DeMarco in view US 5,926,868 (hereinafter Bjerke).

Regarding claim 1, DeMarco discloses a toilet system, comprising a toilet fill valve (16, 18 and 22 attached thereto) that comprises a body (18 and 22 attached thereto) comprising an extended portion (22 attached to 18) that forms a bowl fill outlet port (port attached to 44), a water inlet (12) configured to couple to a water source, and a tank water outlet (20) configured to output water to a toilet tank (10); a bowl fill valve (36) configured to attach directly to the body (18 and 22 attached thereto) of the toilet fill valve, the bowl fill valve (see Fig. 2) comprising a bowl fill valve inlet port (44) configured to mate directly to the bowl fill outlet port of the body of the toilet fill valve

(see Fig. 1), a bowl fill valve outlet port (46); a protrusion (where 44 is pointing to in Fig. 2) configured to insert into a recess (the expanded part of 22 that received 44 as shown in Fig. 1) of the toilet fill valve and retain the bowl fill valve to the toilet fill valve; and a water flow adjustment handle (40); and a tube (22 that attached to 46) configured to attach directly to the bowl fill valve outlet port (46) of the bowl fill valve (see Fig. 1). Although DeMarco the connection between the protrusion and recess being snap fitting type as claimed. Attention is directed to the Bjerke reference which teaches a quick connection type (see figures) between a conduit and a water controller faucet, wherein the quick connection type having a protrusion (16) snap fit into a recess (28). It would be obvious to one of ordinary skill in the art at the time the invention was made to substitute the connection between conduit (22 adjacent member 18) and the valve (36) of DeMarco with a quick connection as taught by Bjerke as a matter of substituting one alternative equivalent connection for anther for coupling between conduit and water controller.

Regarding claim 2, the above combination would provide the bowl fill valve with a slot (the slot between 34 and 16 in Fig. 2 of Bjerke) configured to receive an extension (the rectangular broken lines within 24 in Fig. 3 of Bjerke) of the toilet fill valve.

Regarding claim 3, the above combination would provide the reversal of male and female ends as claimed which is taught by Bjerke.

Regarding claim 4, the above combination would include the protrusion of the bowl fill valve is an annular protrusion (similar to 34 of Bjerke) located on a bowl fill valve side wall of the bowl fill valve, wherein the recess of the toilet fill valve is an annular recess (defined by sleeve 28 of Bjerke) located on a bowl fill outlet port side

wall of the bowl fill outlet port, wherein the slot of the bowl fill valve would obviously be located on the bowl fill valve side wall, and wherein the extension of the toilet fill valve is obviously a rib (one of the rectangular broken lines within 24 of Bjerke) on the bowl fill outlet port side wall.

Regarding claim 5, the bowl fill outlet port (see Fig. 1 of DeMarco) extends radially from a longitudinal axis of the body of the toilet fill valve.

Regarding claim 6, the toilet fill valve of DeMarco further comprises an actuation arm (32) that extends radially from the longitudinal axis of the body of the toilet fill valve, and wherein the actuation arm is angularly offset relative to the bowl fill outlet port (see Fig. 1).

Regarding claim 7, the toilet fill valve of DeMarco further comprises a float (34) configured to move along at least a portion of the body of the toilet fill valve in the vertical direction.

Regarding claim 12, DeMarco discloses a bowl fill valve (see Fig. 2) comprising a bowl fill valve inlet port (44) configured to mate directly to a bowl fill outlet port (port of 22 attached to 44) of a body of a toilet fill valve (16, 18 and 22 attached thereto); a bowl fill valve outlet port (46) configured to attach directly to a tube (22) that provides water from the bowl fill valve outlet port to an overflow tube (24); a protrusion (where 44 is pointing to in Fig. 2) configured to insert into a recess (the expanded part of 22 that received 44 as shown in Fig. 1) of the toilet fill valve and retain the bowl fill valve to the toilet fill valve; and a water flow adjustment handle (40) being configured to adjust water flow from the bowl fill valve inlet port to the bowl fill valve outlet port. Although DeMarco the connection between the protrusion and recess being snap fitting type as claimed.

Attention is directed to the Bjerke reference which teaches a quick connection type (see figures) between a conduit and a water controller faucet, wherein the quick connection type having a protrusion (16) snap fit into a recess (28). It would be obvious to one of ordinary skill in the art at the time the invention was made to substitute the connection between conduit (22 adjacent member 18) and the valve (36) of DeMarco with a quick connection as taught by Bjerke as a matter of substituting one alternative equivalent connection for anther for coupling between conduit and water controller.

Regarding claim 13, the above combination would provide the bowl fill valve with a slot (the slot between 34 and 16 in Fig. 2 of Bjerke) configured to receive an extension (the rectangular broken lines within 24 in Fig. 3 of Bjerke) of the toilet fill valve.

Regarding claim 14, the above combination would provide the reversal of male and female ends as claimed which is taught by Bjerke.

Regarding claims 17-19, the method as claimed are obvious during the installation of the combination of DeMarco and Bjerke toilet system as discussed above.

Regarding claim 22, DeMarco discloses a bowl fill valve (see Fig. 2) comprising a bowl fill valve inlet port (44) configured to mate directly to a bowl fill outlet port (port of 22 attached to 44) of a body of a toilet fill valve (16, 18 and 22 attached thereto); a bowl fill valve outlet port (46) configured to attach directly to a tube (22) that provides water from the bowl fill valve outlet port to an overflow tube (24); and means (40) for adjusting water flow out of the bowl fill valve outlet port. Although DeMarco the connection between the protrusion and recess being snap fitting type as claimed. Attention is directed to the Bjerke reference which teaches a quick connection type (see figures) between a conduit and a water controller faucet, wherein the quick connection type

having a protrusion (16) snap fit into a recess (28). It would be obvious to one of ordinary skill in the art at the time the invention was made to substitute the connection between conduit (22 adjacent member 18) and the valve (36) of DeMarco with a quick connection as taught by Bjerke as a matter of substituting one alternative equivalent connection for anther for coupling between conduit and water controller.

Regarding claim 23, the above combination would provide the bowl fill valve with a slot (the slot between 34 and 16 in Fig. 2 of Bjerke) configured to receive an extension (the rectangular broken lines within 24 in Fig. 3 of Bjerke) of the toilet fill valve.

Regarding claim 25, the DeMarco bowl fill valve includes the means (40) for adjusting water flow out of the bowl fill valve outlet port comprises an adjustment handle.

Claim 8 is rejected under 35 U.S.C. 103(a) as being unpatentable over DeMarco in view Bjerke, as applied in claim 7 above, and further in view of Schoepe.

DeMarco and Bjerke teaches all of the claimed limitations as discussed above regarding claim 7 except for at least a portion of the body of the toilet fill valve extends through the float. Attention is directed to the Schoepe reference which teaches an analogous toilet system having a toilet fill valve (see Fig. 1) having a portion of a body (44) extends through a float (38). It would be obvious to one of ordinary skill in the art at the time the invention was made to substitute the float system of DeMarco with the float system of Schoepe as an alternative equivalent valve operating float for a toilet fill valve.

Double Patenting

The nonstatutory double patenting rejection is based on a judicially created doctrine grounded in public policy (a policy reflected in the statute) so as to prevent the unjustified or improper timewise extension of the "right to exclude" granted by a patent and to prevent possible harassment by multiple assignees. A nonstatutory double patenting rejection is appropriate where the conflicting claims are not identical, but at least one examined application claim is not patentably distinct from the reference claim(s) because the examined application claim is either anticipated by, or would have been obvious over, the reference claim(s). See, e.g., *In re Berg*, 140 F.3d 1428, 46 USPQ2d 1226 (Fed. Cir. 1998); *In re Goodman*, 11 F.3d 1046, 29 USPQ2d 2010 (Fed. Cir. 1993); *In re Longi*, 759 F.2d 887, 225 USPQ 645 (Fed. Cir. 1985); *In re Van Ornum*, 686 F.2d 937, 214 USPQ 761 (CCPA 1982); *In re Vogel*, 422 F.2d 438, 164 USPQ 619 (CCPA 1970); *In re Thorington*, 418 F.2d 528, 163 USPQ 644 (CCPA 1969).

A timely filed terminal disclaimer in compliance with 37 CFR 1.321(c) or 1.321(d) may be used to overcome an actual or provisional rejection based on nonstatutory double patenting provided the reference application or patent either is shown to be commonly owned with the examined application, or claims an invention made as a result of activities undertaken within the scope of a joint research agreement. See MPEP § 717.02 for applications subject to examination under the first inventor to file provisions of the AIA as explained in MPEP § 2159. See MPEP §§ 706.02(l)(1) - 706.02(l)(3) for applications not subject to examination under the first inventor to file provisions of the AIA. A terminal disclaimer must be signed in compliance with 37 CFR 1.321(b).

The USPTO Internet website contains terminal disclaimer forms which may be used. Please visit www.uspto.gov/patent/patents-forms. The filing date of the application in which the form is filed determines what form (e.g., PTO/SB/25, PTO/SB/26, PTO/AIA/25, or PTO/AIA/26) should be used. A web-based eTerminal Disclaimer may be filled out completely online using web-screens. An eTerminal Disclaimer that meets all requirements is auto-processed and approved immediately upon submission. For more information about eTerminal Disclaimers, refer to www.uspto.gov/patents/process/file/efs/guidance/eTD-info-I.jsp.

Claims 1-8, 12-14, 17-19, 22, 23, and 25 are rejected on the ground of nonstatutory double patenting as being unpatentable over claim 1 of U.S. Patent No. 7,743,436; claims 1-10 of U.S. Patent No. 8,104,105; claims 1-20 of U.S. Patent No. 8,650,671; claims 1-24 of U.S. Patent No. 9,103,105; claims 1-20 of U.S. Patent No. 9,139,993; and claims 1-18 of U.S. Patent No. 10,519,639. Although the claims at issue are not identical, they are not patentably distinct from each other because they are an obvious broader version of the essential elements of those in the patents.

Conclusion

Applicant's amendment necessitated the new ground(s) of rejection presented in this Office action. Accordingly, **THIS ACTION IS MADE FINAL**. See MPEP § 706.07(a). Applicant is reminded of the extension of time policy as set forth in 37 CFR 1.136(a).

A shortened statutory period for reply to this final action is set to expire THREE MONTHS from the mailing date of this action. In the event a first reply is filed within

TWO MONTHS of the mailing date of this final action and the advisory action is not mailed until after the end of the THREE-MONTH shortened statutory period, then the shortened statutory period will expire on the date the advisory action is mailed, and any extension fee pursuant to 37 CFR 1.136(a) will be calculated from the mailing date of the advisory action. In no event, however, will the statutory period for reply expire later than SIX MONTHS from the date of this final action.

Any inquiry concerning this communication or earlier communications from the examiner should be directed to TUAN N NGUYEN whose telephone number is (571)272-4892. The examiner can normally be reached on Mon-Fri 8-4.

If attempts to reach the examiner by telephone are unsuccessful, the examiner's supervisor, David Angwin can be reached on (571) 270-3735. The fax phone number for the organization where this application or proceeding is assigned is 571-273-8300.

Information regarding the status of an application may be obtained from the Patent Application Information Retrieval (PAIR) system. Status information for published applications may be obtained from either Private PAIR or Public PAIR. Status information for unpublished applications is available through Private PAIR only. For more information about the PAIR system, see http://pair-direct.uspto.gov. Should you have questions on access to the Private PAIR system, contact the Electronic Business Center (EBC) at 866-217-9197 (toll-free). If you would like assistance from a USPTO Customer Service Representative or access to the automated information system, call 800-786-9199 (IN USA OR CANADA) or 571-272-1000.

/TUAN N NGUYEN/
Primary Examiner, Art Unit 3754

Electronic Acknowledgement Receipt

EFS ID:	39167932
Application Number:	16686328
International Application Number:	
Confirmation Number:	6118
Title of Invention:	TOILET VALVE
First Named Inventor/Applicant Name:	Michael J. Schuster
Customer Number:	24504
Filer:	Michael D Aurelio/Christine Vieira
Filer Authorized By:	Michael D Aurelio
Attorney Docket Number:	171401-1037
Receipt Date:	15-APR-2020
Filing Date:	18-NOV-2019
Time Stamp:	15:52:28
Application Type:	Utility under 35 USC 111(a)

Payment information:

Submitted with Payment	no

File Listing:

Document Number	Document Description	File Name	File Size(Bytes)/ Message Digest	Multi Part /.zip	Pages (if appl.)
1	Amendment/Req. Reconsideration-After Non-Final Reject	171401-1037_Response_to_Office_Action_mailed_1-15-2020.pdf	240019 9ba6a931ac438a10d430cf411370b7e1552f9855	no	20

Warnings:

Information:	
Total Files Size (in bytes):	240019

This Acknowledgement Receipt evidences receipt on the noted date by the USPTO of the indicated documents, characterized by the applicant, and including page counts, where applicable. It serves as evidence of receipt similar to a Post Card, as described in MPEP 503.

New Applications Under 35 U.S.C. 111
If a new application is being filed and the application includes the necessary components for a filing date (see 37 CFR 1.53(b)-(d) and MPEP 506), a Filing Receipt (37 CFR 1.54) will be issued in due course and the date shown on this Acknowledgement Receipt will establish the filing date of the application.
National Stage of an International Application under 35 U.S.C. 371
If a timely submission to enter the national stage of an international application is compliant with the conditions of 35 U.S.C. 371 and other applicable requirements a Form PCT/DO/EO/903 indicating acceptance of the application as a national stage submission under 35 U.S.C. 371 will be issued in addition to the Filing Receipt, in due course.
New International Application Filed with the USPTO as a Receiving Office
If a new international application is being filed and the international application includes the necessary components for an international filing date (see PCT Article 11 and MPEP 1810), a Notification of the International Application Number and of the International Filing Date (Form PCT/RO/105) will be issued in due course, subject to prescriptions concerning national security, and the date shown on this Acknowledgement Receipt will establish the international filing date of the application.

IN THE UNITED STATES PATENT AND TRADEMARK OFFICE

In re the application of:	Confirmation: 6118
Michael J. Schuster et al.	Art Unit: 3754
Application Number: 16/686,328	Examiner: NGUYEN, TUAN N
Filing Date: November 18, 2019	Docket No.: 171401-1037

Title: **TOILET VALVE**

RESPONSE TO NONFINAL OFFICE ACTION DATED JANUARY 15, 2020

Mail Stop: Amendment
Commissioner for Patents
P.O. Box 1450
Alexandria, VA 22313-1450

Sir/Ma'am:

With respect to the outstanding nonfinal Office Action dated January 15, 2020, the following Response is submitted.

It is believed that no extensions of time or fees for net addition of claims are required beyond those that may otherwise be provided for in documents accompanying this paper. However, if additional extensions of time are necessary to prevent abandonment of this application, then such extensions of time are hereby petitioned under 37 C.F.R. § 1.136(a), and any fees required therefor (including, but not limited to, fees for net addition of claims) are hereby authorized to be charged to our Deposit Account No. 20-0778.

IN THE CLAIMS:

Please amend the claims as indicated below. The language being added is underlined ("__"), and the language being deleted contains strikethrough ("—") or is enclosed by double brackets ("[[ ]]").

1. (Currently Amended) A toilet system, comprising:

a toilet fill valve that comprises:

a body comprising an extended portion that forms a bowl fill outlet port;

a water inlet configured to couple to a water source; and

a tank water outlet configured to output water to a toilet tank;

a bowl fill valve configured to attach directly to the body of the toilet fill valve, the bowl fill valve comprising:

a bowl fill valve inlet port configured to mate directly to the bowl fill outlet port of the body of the toilet fill valve;

a bowl fill valve outlet port;

a protrusion configured to insert into a recess of the toilet fill valve and retain the bowl fill valve to the toilet fill valve<u>, the protrusion being configured to snap fit into the recess</u>; and

a water flow adjustment handle; and

a tube configured to attach directly to the bowl fill valve outlet port of the bowl fill valve.

2. (Original) The toilet system of claim 1, wherein the bowl fill valve further comprises a slot configured to receive an extension of the toilet fill valve.

3. (Original) The toilet system of claim 1, wherein the bowl fill outlet port comprises a male end, and wherein the bowl fill valve inlet port comprises a female receptacle for the male end of the bowl fill outlet port.

4. (Currently Amended) The toilet system of claim 2, ~~1,~~ wherein the protrusion of the bowl fill valve is an annular protrusion located on a bowl fill valve side wall of the bowl fill valve, wherein the recess of the toilet fill valve is an annular recess located on a bowl fill outlet port side wall of the bowl fill outlet port, wherein the slot of the bowl fill valve is located on the bowl fill valve side wall, and wherein the extension of the toilet fill valve is a rib on the bowl fill outlet port side wall.

5. (Original) The toilet system of claim 1, wherein the bowl fill outlet port extends radially from a longitudinal axis of the body of the toilet fill valve.

6. (Original) The toilet system of claim 5, wherein the toilet fill valve further comprises an actuation arm that extends radially from the longitudinal axis of the body of the toilet fill valve, and wherein the actuation arm is angularly offset relative to the bowl fill outlet port.

7. (Original) The toilet system of claim 1, wherein the toilet fill valve further comprises a float configured to move along at least a portion of the body of the toilet fill valve.

8. (Currently Amended) The toilet system of claim 7, wherein the at least a portion of the body of the toilet fill valve extends through the float.

9. (Canceled)

10. (Canceled)

11. (Canceled)

12. (Currently Amended) A bowl fill valve, comprising:

a bowl fill valve inlet port configured to mate directly to a bowl fill outlet port of a body of a toilet fill valve;

a bowl fill valve outlet port configured to attach directly to a tube that provides water from the bowl fill valve outlet port to an overflow tube;

a protrusion configured to insert into a recess of the toilet fill valve and retain the bowl fill valve to the toilet fill valve, the protrusion being configured to snap fit into the recess; and

a water flow adjustment handle being configured to adjust water flow from the bowl fill valve inlet port to the bowl fill valve outlet port.

13. (Original) The bowl fill valve of claim 12, further comprising a slot configured to receive an extension of the toilet fill valve.

14. (Original) The bowl fill valve of claim 12, wherein the bowl fill valve inlet port comprises a female receptacle for a male end of the bowl fill outlet port.

15. (Canceled)

16. (Canceled)

17. (Currently Amended) A method, comprising:

coupling a water inlet of a toilet fill valve to a water source;

attaching a bowl fill valve directly to a body of the toilet fill valve by at least:

mating a bowl fill valve inlet port of the bowl fill valve directly to a bowl fill outlet port that extends from the body of the toilet fill valve; and

snap fitting ~~inserting~~ a protrusion of the bowl fill valve into a recess of the toilet fill valve; and

attaching a tube directly to a bowl fill valve outlet port of the bowl fill valve.

18. (Original) The method of claim 17, wherein attaching the bowl fill valve directly to the body of the toilet fill valve further comprises inserting an extension of the toilet fill valve into a slot of the bowl fill valve.

19. (Original) The method of claim 17, further comprising adjusting a flow of water out of the bowl fill valve.

20. (Canceled)

21. (Canceled)

22. (Currently Amended) A bowl fill valve, comprising:

a bowl fill valve inlet port configured to mate directly to a bowl fill outlet port of a body of a toilet fill valve;

a bowl fill valve outlet port configured to attach directly to a tube that provides water from the bowl fill valve outlet port to an overflow tube; ~~and~~

<u>a protrusion on the bowl fill valve configured to snap fit into a recess of the toilet fill valve and retain the bowl fill valve to the toilet fill valve; and</u>

means for adjusting water flow out of the bowl fill valve outlet port.

23. (Original) The bowl fill valve of claim 22, further comprising a slot configured to receive an extension of the toilet fill valve.

24. (Canceled)

25. (Original) The bowl fill valve of claim 22, wherein the means for adjusting water flow out of the bowl fill valve outlet port comprises an adjustment handle.

REMARKS

As of entry of this Response, claims 1-8, 12-14, 17-19, 22, 23, and 25 remain pending in the present application. Claims 1, 4, 8, 12, 17, and 22 are currently amended, and claims 9-11, 15, 16, 20, 21, and 24 are canceled without prejudice, disclaimer, or waiver. Applicants reserve the right to present these claims, or variants thereof, in continuing applications. Reconsideration and allowance of the pending application and claims are respectfully requested.

I. The Objection to the Drawings Must be Withdrawn

On page 2 of the Office Action, the drawings are objected to under 37 CFR 1.83(a). Specifically, the Office Action states:

> The drawings must show every feature of the invention specified in the claims. Therefore, the limitation of claim 3 must be shown or the feature(s) canceled from the claim(s). No new matter should be entered.

Applicant notes that claim 3 recites as follows:

> 3. The toilet system of claim 1, wherein the bowl fill outlet port comprises a male end, and wherein the bowl fill valve inlet port comprises a female receptacle for the male end of the bowl fill outlet port.

Applicant disagrees that the elements of claim 3 are not shown in the drawings.

Specifically, paragraph [0033] states as follows:

> In some embodiments, the bowl fill outlet port 206 may comprise a female receptacle and, correspondingly, the bowl fill valve inlet port 213 may comprise a male end compatible with the female receptacle. Alternatively, the bowl fill valve inlet port 213 may comprise a female receptacle and the bowl fill outlet port 206 may comprise a male end compatible with such female receptacle.

In addition, paragraph [0042] of the present application states as follows:

> With reference to FIGS. 5A and 5B, even though the slots 236 are depicted as being formed within the side wall 239 of the bowl fill valve inlet

> port 213 and the ribs 249 extend from the side wall 243 within the bowl fill outlet port 206, **it is possible that this arrangement may be reversed where the slots 236 are formed in the side wall 243 of the bowl fill outlet port 206a and the ribs 249 extend from the side wall 239 of the bowl fill valve inlet port 213a. In addition, the annular groove 253 may be created in the side wall 239 of the bowl fill valve inlet port 213 and the annular projection 246 may extend inward from the side wall 243 within the bowl fill outlet port 206 in a reverse arrangement than that shown with reference to FIG. 5B.**

[Emphasis Added] Accordingly, Applicant asserts that at least FIGS. 5A and 5B show the elements of claim 3 as described in the specification. Accordingly, Applicant requests that the objection to the drawings under 37 CFR 1.83(a) be withdrawn.

II. Double Patenting Rejection of Claims 1-25

On pages 9-11 of the Office Action, claims 1-25 stand rejected on the ground of nonstatutory obviousness-type double patenting as being unpatentable over claim 1 of U.S. Patent No. 7,743,436; claims 1-10 of U.S. Patent No. 8,104,105; claims 1-20 of U.S. Patent No. 8,650,671; claims 1-24 of U.S. Patent No. 9,103,105; claims 1-20 of U.S. Patent No. 9,139,993; and claims 1-18 of U.S. Patent No. 10,519,639. Applicant notes that claims 9-11, 15, 16, 20, 21, and 24 have been canceled, thereby rendering this rejection moot with respect to such claims. With regard to the rejection of currently pending claims 1-8, 12-14, 17-19, 22, 23, and 25 under the doctrine of non-statutory obviousness-type double patenting, Applicants respectfully request that the rejection be held in abeyance until it is the only rejection outstanding in accordance with MPEP § 714.02 and 37 C.F.R. § 1.111(b), as the claims may be further examined notwithstanding the rejection.

III. Rejection of Claims 3 and 14 under 35 U.S.C. § 112(a)

Page 3 of the Office Action indicates that claims 3 and 14 are rejected under 35 U.S.C. § 112(a) or 35 U.S.C. 112 (pre-AIA), first paragraph, as failing to comply with the written description requirement. Applicant respectfully requests that the rejections of claims 3 and 14 be withdrawn for at least the following reasons.

Applicant notes that claims 3 and 14 recites as follows:

> 3. The toilet system of claim 1, wherein the bowl fill outlet port comprises a male end, and wherein the bowl fill valve inlet port comprises a female receptacle for the male end of the bowl fill outlet port.
>
> 14. The bowl fill valve of claim 12, wherein the bowl fill valve inlet port comprises a female receptacle for a male end of the bowl fill outlet port.

On page 3, the Office Action states as follows:

> The claim(s) contains subject matter which was not described in the specification in such a way as to reasonably convey to one skilled in the relevant art that the inventor or a joint inventor, or for pre-AIA the inventor(s), at the time the application was filed, had possession of the claimed invention. While the original specification discloses a male end of the bowl fill outlet port for the embodiment for Figs. 1-3, it fails to disclose a male end as claimed for the embodiment of Figs. 4-9B where claim 3 is directed to. Hence, the limitation of claims 3 and 14 are considered new matter.

Applicants respectfully disagree. In particular, paragraph [0033] which discusses FIG. 4 states as follows:

> In some embodiments, the bowl fill outlet port 206 may comprise a female receptacle and, correspondingly, the bowl fill valve inlet port 213 may comprise a male end compatible with the female receptacle. Alternatively, the bowl fill valve inlet port 213 may comprise a female receptacle and the bowl fill outlet port 206 may comprise a male end compatible with such female receptacle.

In addition, paragraph [0042] of the present application which discusses the embodiments of FIGS. 5A and 5B states as follows:

> With reference to FIGS. 5A and 5B, even though the slots 236 are depicted as being formed within the side wall 239 of the bowl fill valve inlet port 213 and the ribs 249 extend from the side wall 243 within the bowl fill outlet port 206, it is possible that this arrangement may be reversed where the slots 236 are formed in the side wall 243 of the bowl fill outlet port 206a and the ribs 249 extend from the side wall 239 of the bowl fill valve inlet port 213a. In addition, the annular groove 253 may be created in the side wall 239 of the bowl fill valve inlet port 213 and the annular projection 246 may extend inward from the side wall 243 within the bowl fill outlet port 206 in a reverse arrangement than that shown with reference to FIG. 5B.

Further, paragraph [0047] of the present application which discusses the embodiments of FIGS. 6A. 6B, and 6C states in part:

> In addition, it may be the case that the locking ears 266 extend inward from the side wall 273 of the bowl fill outlet port 206b and that the locking grooves 269 be situated within the side wall 271 of the bowl fill valve inlet port 213b.

Accordingly, at several points the application contemplates the subject matter of claims 3 and 14. Applicant asserts that the statement in the Office Action that the present specification "fails to disclose a male end as claimed for the embodiment of Figs. 4-9B where claim 3 is directed to" is incorrect. Applicant asserts that in view of at least the subject matter cited from the original specification as set forth above, one skilled in the art will understand that the specification describes the subject matter of claims 3 and 14. Therefore, Applicant respectfully requests that the rejection of claims 3 and 14 be withdrawn.

IV. Rejection of Claims 3, 4, 8, and 14 under 35 U.S.C. § 112(b)

Page 4 of the Office Action indicates that claims 3, 4, 8, and 14 are rejected under 35 U.S.C. § 112(b) or 35 U.S.C. 112 (pre-AIA), second paragraph, as failing to

comply with the written description requirement. For the reasons that follow, Applicant respectfully requests that the rejections of claims 3, 4, 8, and 14 be withdrawn.

a. Rejection of Claims 3 and 14 under 35 U.S.C. § 112(b)

With respect to claims 3 and 14, the Office Action states:

> Claims 3 and 14 are rejected under 35 U.S.C. 112(b) or 35 U.S.C. 112 (pre-AIA), second paragraph, as being indefinite for failing to particularly point out and distinctly claim the subject matter which the inventor or a joint inventor, or for pre-AIA the applicant regards as the invention. It is unclear as to what structure is being referred to by the limitation of the claim. The claims are being examined as best understood.

Applicants respectfully disagree. In particular, paragraph [0033] which discusses FIG. 4 states as follows:

> In some embodiments, the bowl fill outlet port 206 may comprise a female receptacle and, correspondingly, the bowl fill valve inlet port 213 may comprise a male end compatible with the female receptacle. Alternatively, the bowl fill valve inlet port 213 may comprise a female receptacle and the bowl fill outlet port 206 may comprise a male end compatible with such female receptacle.

In addition, paragraph [0042] of the present application which discusses the embodiments of FIGS. 5A and 5B states as follows:

> With reference to FIGS. 5A and 5B, even though the slots 236 are depicted as being formed within the side wall 239 of the bowl fill valve inlet port 213 and the ribs 249 extend from the side wall 243 within the bowl fill outlet port 206, it is possible that this arrangement may be reversed where the slots 236 are formed in the side wall 243 of the bowl fill outlet port 206a and the ribs 249 extend from the side wall 239 of the bowl fill valve inlet port 213a. In addition, the annular groove 253 may be created in the side wall 239 of the bowl fill valve inlet port 213 and the annular projection 246 may extend inward from the side wall 243 within the bowl fill outlet port 206 in a reverse arrangement than that shown with reference to FIG. 5B.

Further, paragraph [0047] of the present application which discusses the embodiments of FIGS. 6A. 6B, and 6C states in part:

> In addition, it may be the case that the locking ears 266 extend inward from the side wall 273 of the bowl fill outlet port 206b and that the locking grooves 269 be situated within the side wall 271 of the bowl fill valve inlet port 213b.

Accordingly, at several points the application contemplates the subject matter of claims 3 and 14. Applicant asserts that in view of at least the subject matter cited from the original specification as set forth above, one skilled in the art will understand what structure in the specification to which claims 3 and 14 are directed. Therefore, Applicant respectfully requests that the rejection of claims 3 and 14 on this basis be withdrawn.

b. Rejection of Claims 4 and 8 under 35 U.S.C. § 112(b)

The Office Action rejects claim 4 due to the antecedent basis issues noted. Applicant has amended claim 4 to depend from claim 2 instead of claim 1, thereby rendering this ground of rejection moot. The Office Action rejections claim 8 due to a lack of antecedent basis. Claim 8 has been amended herein to address the issue noted. Accordingly, Applicant requests that the rejection of claims 4 and 8 be withdrawn.

V. Claims 1-3, 5-7, 12-14, 17-19, 22, 23, and 25 Are Patentable of *DeMarco*

Page 5 of the Office Action indicates that claims 1-3, 5-7, 11-14, 17-19 and 22-25 have been rejected under 35 U.S.C. § 102(b) as allegedly being anticipated by U.S. Patent No. 5,708,991, issued to DeMarco (hereinafter "*DeMarco*"). A claim is anticipated only if each and every element as set forth in the claim is found, either expressly or inherently described, in a single prior art reference. *Verdegaal Bros. v. Union Oil Co. of California*, 814 F.2d 628, 631 (Fed. Cir. 1987). Stated differently, to

anticipate a claim, it is required "that the four corners of a single, prior art document describe every element of the claimed invention." *Xerox Corp. v. 3Com Corp.*, 458 F.3d 1310, 1322 (Fed. Cir. 2006). Further, "unless a reference discloses within the four corners of the document not only all of the limitations claimed but also all of the limitations arranged or combined in the same way as recited in the claim, it cannot be said to prove prior invention of the thing claimed and, thus, cannot anticipate under 35 U.S.C. § 102." *NetMoneyIN, Inc. v. VeriSign, Inc.*, 545 F.3d 1359, 1371 (Fed. Cir. 2008). *See also* MPEP § 2131.

Applicant notes that claims 11 and 24 are canceled herein, thereby rending this rejection moot with respect to such claims. Applicant respectfully requests that the rejection of claims 1-3, 5-7, 12-14, 17-19, 22, 23, and 25 be withdrawn for at least the following reasons.

To begin, independent claim 1, as amended, recites:

> 1. A system, comprising:
>
> ...
>
> a protrusion configured to insert into a recess of the toilet fill valve and retain the bowl fill valve to the toilet fill valve, the protrusion being configured to snap fit into the recess
>
> ... .

With respect to at least the above element, on page 5 the Office Action states:

> a bowl fill valve outlet port (46); a protrusion (where 44 is pointing to in Fig. 2) configured to insert into a recess (the expanded part of 22 that received 44 as shown in Fig. 1) of the toilet fill valve and retain the bowl fill valve to the toilet fill valve; and a water flow adjustment handle (40); and a tube (22 that attached to 46) configured to attach directly to the bowl fill valve outlet port (46) of the bowl fill valve (see Fig. 1).

Applicants respectfully disagree. Specifically, the item 22 is noted by *DeMarco* as "Reseal hose 22" that "directs water into an overflow tube 24 of a flush valve 26."

DeMarco, Column 3, lines 24-25. The Office Action reads the "expanded part" of the hose 22 as the "recess of the toilet fill valve." Applicant asserts that the hose 22 does not include a recess. Rather, it conforms to the surface area of the "tubular stem 44." Taken by itself, the hose 22 does not include a recess into which a protrusion may be inserted. Applicant notes that the configuration recited by *DeMarco* will result in a pressure head within the hose 22 that will ultimately work the hose 22 off of the "tubular stem 44" (see, for example, the present specification, paragraph [0023]).

In addition, claim 1 has been amended to note "the protrusion being a snap fit into the recess." Applicant asserts that *DeMarco* fails to show or suggest that the "tubular stem 44" is snap fit into the hose 22.

Accordingly, Applicant requests that rejection of claim 1 as amended be withdrawn. In addition, Applicant notes that independent claims 12, 17, and 22 have been amended to include subject matter similar in scope with claim 1. Accordingly, Applicant requests that the rejection of claims 1, 12, 17, and 22 be withdrawn. Also, Applicant requests that the rejection of claims 2, 3, 5-7, 13, 14, 18, 19, 23, and 25 be withdrawn as depending from claims 1, 12, 17, or 22.

VI. Claims 4, 9-10, 15-16 and 20-21 Are Patentable over *DeMarco* and *Robinson*

Page 8 of the Office Action indicates that claims 4, 9-10, 15-16 and 20-21 have been rejected under 35 U.S.C. § 103(a) as allegedly being obvious in view of *DeMarco* and U.S. Patent No. 6,409,221, issued to Robinson (hereinafter "*Robinson*"). In order to establish a *prima facie* case of obviousness under 35 U.S.C. § 103, the Examiner must show that each and every element of the claim is described or suggested by the prior art or would have been obvious in view of the prior art. *See In re Fine*, 837 F.2d 1071,

1073-1074 (Fed. Cir. 1988); *Ex Parte Wada and Murphy*, Appeal 2007-3733 (BPAI 2008); *See also, KSR Int'l v. Teleflex, Inc.*, 550 U.S. 398, 411 (2007) (claim deemed obvious to one of ordinary skill where all claim elements were disclosed in the cited prior art references). In addition, "[r]ejections on obviousness grounds cannot be sustained by mere conclusory statements; instead, there must be some articulated reasoning with some rational underpinning to support the legal conclusion of obviousness." *KSR Int'l*, 550 U.S. at 418 (quoting *In re Kahn*, 441 F.3d 977, 988 (Fed. Cir. 2006)).

Applicant notes that claims 9, 10, 15, 16, 20, and 21 are canceled herein, thereby rendering the rejection of such claims moot. Applicant respectfully requests that the rejection of claim 4 be withdrawn for at least the following reasons.

Claims 4 as originally filed recites as follows:

> 4. The toilet system of claim 2, wherein the protrusion of the bowl fill valve is an annular protrusion located on a bowl fill valve side wall of the bowl fill valve, wherein the recess of the toilet fill valve is an annular recess located on a bowl fill outlet port side wall of the bowl fill outlet port, wherein the slot of the bowl fill valve is located on the bowl fill valve side wall, and wherein the extension of the toilet fill valve is a rib on the bowl fill outlet port side wall.

With respect to the elements of claim 4, the Office Action states:

> Attention is directed to the Robinson reference which teaches a coupling (see figures) between pipes or conduits having ... [a] snap-fit (between members 212 and 312, or the slot and rib (between members 210 and 310) as claimed.

The figures of *Robinson* that show the features 212, 312, 210, and 310 are reproduced below:

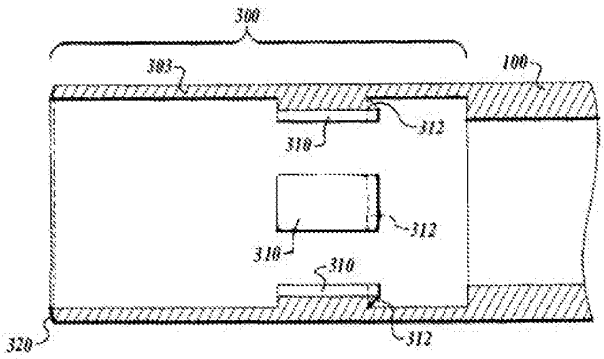

Fig. 3

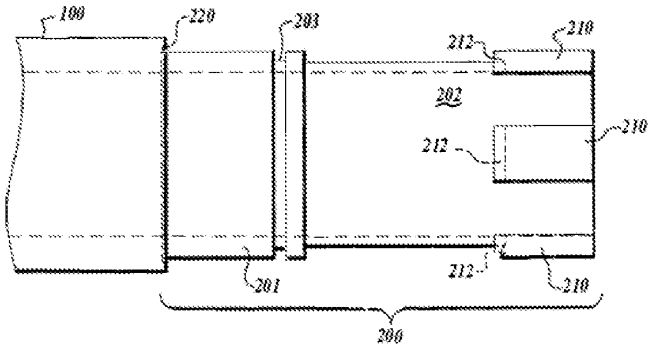

Fig. 4

At Column 5, lines 5-42 in describing the above drawings, Robinson states in part:

> It will be appreciated that when the male joint member **200** is fully inserted into the female joint member **300**, the joint members **200**, **300** can be rotated relative to each other to a second position wherein the outwardly extending locking tabs **210** are aligned directly behind the inwardly extending locking tabs **310**, as shown in FIG. **2**. It will also be appreciated that the inwardly extending locking tabs **310** radially overlap the outwardly extending locking tabs **210**, and that the overlapping locking tabs will thereby prevent significant relative axial motion between the joint members **200**, **300**. FIG. 5 shows an exploded partial sectional view of the male joint member **200** and the female joint member **300**, illustrating the axial orientation of the locking tabs **210**, **310** when the joint is assembled. As shown in FIGS. 1 and 2, the length of the third tubular portion **303** is preferably approximately equal to the combined length of the first tubular portion **201** and second tubular portion **202**.

> As seen most clearly in FIG. 3, in the illustrated embodiment the inwardly extending locking tabs **310** have a back edge **312** that is reverse chamfered. The reverse chamfer on the back edge **312** is shaped to engage the reverse chamfer on the back edge **212** of the outwardly extending locking tabs **210** when the joint members are rotated to the second position. As also seen in FIG. 3, the front edge **320** of the third tubular portion **303** may optionally be provided with a chamfer that is shaped to engage the reverse chamfer at the junction **220** between the pipe **100** and the male joint first tubular portion **201**. A locking pin aperture **350** is provided through the female joint member **300** that is sized to slidably accommodate the locking pin **250** and located axially and circumferentially on the third tubular portion **303** whereby the locking pin **250** will engage the locking pin aperture **350** when the joint members **200**, **300** are in the second position. It will be appreciated when the locking pin **250** engages the locking pin aperture **350**, the male joint member **200** and female joint member **300** will be locked from rotating with respect to each other.

As noted above, when the male joint member 200 is inserted into the female joint member 300, the outwardly extended locking tabs 210 are ultimately positioned behind the inwardly extended locking tabs 310. The respective joint members are twisted relative to each other so that the tabs 210 are positioned relative to the tabs 310 to prevent separation of the joint members. When the tabs 210 and 310 are positioned as such, the reverse chamfers on the back edges 212 and 312 engage each other to further prevent separation of the tube members. Applicant asserts that this arrangement does not show or suggest a snap fit as set forth in amended claim 1 from which claim 4 depends. Also, Applicant asserts that this arrangement does not show or suggest a slot and rib as set forth in claim 4.

Accordingly, Applicant requests that the rejection of claim 4 be withdrawn.

VII. Claim 8 Is Patentable over *DeMarco* and *Schoepe*

Page 9 of the Office Action indicates that claim 8 has been rejected under 35 U.S.C. § 103(a) as allegedly being obvious in view of *DeMarco* and U.S. Patent No. 4,100,928, issued to Schoepe (hereinafter "*Schoepe*"). Applicant respectfully requests that the rejection of claim 8 be withdrawn for at least the following reasons.

Applicant notes that claim 8 depends from claim 1 as amended. Applicant asserts that the *DeMarco* fails to show or suggest the elements of claim 1 for the reasons set forth above. In addition, *Schoepe* fails to show or suggest the elements of claim 1 as amended. Accordingly, Applicant requests that the rejection of claim 8 be withdrawn as depending from claim 1 for the reasons set forth above with respect to claim 1.

VIII. No Waiver

Applicant's arguments and amendments are without prejudice or disclaimer. Applicant has not addressed each specific rejection of the dependent claims because Applicant submits that the independent claims are allowable over the documents of record, as discussed above. Applicant has not acquiesced to any such rejection and reserve the right to address the patentability of any additional claim features in the future.

CONCLUSION

It is requested that all outstanding objections and rejections be withdrawn and that this application and all presently pending claims be allowed to issue. If the Examiner has any questions or comments regarding this Response, the Examiner is encouraged to telephone the undersigned attorney of Applicant.

Respectfully submitted,

/Michael J. D'Aurelio/

Michael J. D'Aurelio
Registration Number: 40,977

THOMAS | HORSTEMEYER, LLP
Customer Number 24504
(770) 933-9500

PTO/SB/06 (09-11)
Approved for use through 1/31/2014. OMB 0651-0032
U.S. Patent and Trademark Office; U.S. DEPARTMENT OF COMMERCE
Under the Paperwork Reduction Act of 1995, no persons are required to respond to a collection of information unless it displays a valid OMB control number.

PATENT APPLICATION FEE DETERMINATION RECORD Substitute for Form PTO-875	Application or Docket Number 16/686,328	Filing Date 11/18/2019	☐ To be Mailed

ENTITY: ☑ LARGE ☐ SMALL ☐ MICRO

APPLICATION AS FILED - PART I

FOR	(Column 1) NUMBER FILED	(Column 2) NUMBER EXTRA		RATE ($)	FEE ($)
☐ BASIC FEE (37 CFR 1.16(a), (b), or (c))	N/A	N/A		N/A	
☐ SEARCH FEE (37 CFR 1.16(k), (i), or (m))	N/A	N/A		N/A	
☐ EXAMINATION FEE (37 CFR 1.16(o), (p), or (q))	N/A	N/A		N/A	
TOTAL CLAIMS (37 CFR 1.16(i))	minus 20 =	*		x $100 =	
INDEPENDENT CLAIMS (37 CFR 1.16(h))	minus 3 =	*		x $460 =	
☐ APPLICATION SIZE FEE (37 CFR 1.16(s))	If the specification and drawings exceed 100 sheets of paper, the application size fee due is $310 ($155 for small entity) for each additional 50 sheets or fraction thereof. See 35 U.S.C. 41(a)(1)(G) and 37 CFR 1.16(s).				
☐ MULTIPLE DEPENDENT CLAIM PRESENT (37 CFR 1.16(j))					
* If the difference in column 1 is less than zero, enter "0" in column 2.				TOTAL	

APPLICATION AS AMENDED - PART II

AMENDMENT 04/15/2020	(Column 1) CLAIMS REMAINING AFTER AMENDMENT		(Column 2) HIGHEST NUMBER PREVIOUSLY PAID FOR	(Column 3) PRESENT EXTRA		RATE ($)	ADDITIONAL FEE ($)
Total (37 CFR 1.16(i))	* 4	Minus	** 20	= 0		x $100 =	0
Independent (37 CFR 1.16(h))	* 1	Minus	*** 3	= 0		x $460 =	0
☐ Application Size Fee (37 CFR 1.16(s))							
☐ FIRST PRESENTATION OF MULTIPLE DEPENDENT CLAIM (37 CFR 1.16(j))							
						TOTAL ADD'L FEE	0

AMENDMENT	(Column 1) CLAIMS REMAINING AFTER AMENDMENT		(Column 2) HIGHEST NUMBER PREVIOUSLY PAID FOR	(Column 3) PRESENT EXTRA		RATE ($)	ADDITIONAL FEE ($)
Total (37 CFR 1.16(i))	*	Minus	**	=		x $0 =	
Independent (37 CFR 1.16(h))	*	Minus	***	=		x $0 =	
☐ Application Size Fee (37 CFR 1.16(s))							
☐ FIRST PRESENTATION OF MULTIPLE DEPENDENT CLAIM (37 CFR 1.16(j))							
						TOTAL ADD'L FEE	

* If the entry in column 1 is less than the entry in column 2, write "0" in column 3.	LIE
** If the "Highest Number Previously Paid For" IN THIS SPACE is less than 20, enter "20".	/DEBRA A SAVOY/
*** If the "Highest Number Previously Paid For" IN THIS SPACE is less than 3, enter "3".	
The "Highest Number Previously Paid For" (Total or Independent) is the highest number found in the appropriate box in column 1.	

This collection of information is required by 37 CFR 1.16. The information is required to obtain or retain a benefit by the public which is to file (and by the USPTO to process) an application. Confidentiality is governed by 35 U.S.C. 122 and 37 CFR 1.14. This collection is estimated to take 12 minutes to complete, including gathering, preparing, and submitting the completed application form to the USPTO. Time will vary depending upon the individual case. Any comments on the amount of time you require to complete this form and/or suggestions for reducing this burden, should be sent to the Chief Information Officer, U.S. Patent and Trademark Office, U.S. Department of Commerce, P.O. Box 1450, Alexandria, VA 22313-1450. DO NOT SEND FEES OR COMPLETED FORMS TO THIS ADDRESS. **SEND TO: Commissioner for Patents, P.O. Box 1450, Alexandria, VA 22313-1450.**

If you need assistance in completing the form, call 1-800-PTO-9199 and select option 2.

UNITED STATES PATENT AND TRADEMARK OFFICE

UNITED STATES DEPARTMENT OF COMMERCE
United States Patent and Trademark Office
Address: COMMISSIONER FOR PATENTS
P.O. Box 1450
Alexandria, Virginia 22313-1450
www.uspto.gov

APPLICATION NO.	FILING DATE	FIRST NAMED INVENTOR	ATTORNEY DOCKET NO.	CONFIRMATION NO.
16/686,328	11/18/2019	Michael J. Schuster	171401-1037	6118

24504 7590 01/15/2020
THOMAS | HORSTEMEYER, LLP
3200 WINDY HILL ROAD, SE
SUITE 1600E
ATLANTA, GA 30339

EXAMINER
NGUYEN, TUAN N

ART UNIT	PAPER NUMBER
3754	

NOTIFICATION DATE	DELIVERY MODE
01/15/2020	ELECTRONIC

Please find below and/or attached an Office communication concerning this application or proceeding.

The time period for reply, if any, is set in the attached communication.

Notice of the Office communication was sent electronically on above-indicated "Notification Date" to the following e-mail address(es):

docketing@thomashorstemeyer.com
ozzie.liggins@tkhr.com
uspatents@tkhr.com

PTOL-90A (Rev. 04/07)

Office Action Summary	Application No. 16/686,328	Applicant(s) Schuster et al.	
	Examiner TUAN N NGUYEN	Art Unit 3754	AIA (FITF) Status No

-- The MAILING DATE of this communication appears on the cover sheet with the correspondence address --

Period for Reply

A SHORTENED STATUTORY PERIOD FOR REPLY IS SET TO EXPIRE 3 MONTHS FROM THE MAILING DATE OF THIS COMMUNICATION.

- Extensions of time may be available under the provisions of 37 CFR 1.136(a). In no event, however, may a reply be timely filed after SIX (6) MONTHS from the mailing date of this communication.
- If NO period for reply is specified above, the maximum statutory period will apply and will expire SIX (6) MONTHS from the mailing date of this communication.
- Failure to reply within the set or extended period for reply will, by statute, cause the application to become ABANDONED (35 U.S.C. § 133). Any reply received by the Office later than three months after the mailing date of this communication, even if timely filed, may reduce any earned patent term adjustment. See 37 CFR 1.704(b).

Status

1)☑ Responsive to communication(s) filed on 18 November 2019.

☐ A declaration(s)/affidavit(s) under **37 CFR 1.130(b)** was/were filed on _____.

2a)☐ This action is **FINAL.** 2b) ☑ This action is non-final.

3)☐ An election was made by the applicant in response to a restriction requirement set forth during the interview on _____; the restriction requirement and election have been incorporated into this action.

4)☐ Since this application is in condition for allowance except for formal matters, prosecution as to the merits is closed in accordance with the practice under *Ex parte Quayle*, 1935 C.D. 11, 453 O.G. 213.

Disposition of Claims*

5) ☑ Claim(s) 1-25 is/are pending in the application.

5a) Of the above claim(s) _____ is/are withdrawn from consideration.

6) ☐ Claim(s) _____ is/are allowed.

7) ☑ Claim(s) 1-25 is/are rejected.

8) ☐ Claim(s) _____ is/are objected to.

9) ☐ Claim(s) _____ are subject to restriction and/or election requirement

* If any claims have been determined allowable, you may be eligible to benefit from the **Patent Prosecution Highway** program at a participating intellectual property office for the corresponding application. For more information, please see http://www.uspto.gov/patents/init_events/pph/index.jsp or send an inquiry to **PPHfeedback@uspto.gov.**

Application Papers

10)☐ The specification is objected to by the Examiner.

11)☑ The drawing(s) filed on 11/18/19 is/are: a)☐ accepted or b)☑ objected to by the Examiner.

Applicant may not request that any objection to the drawing(s) be held in abeyance. See 37 CFR 1.85(a).

Replacement drawing sheet(s) including the correction is required if the drawing(s) is objected to. See 37 CFR 1.121(d).

Priority under 35 U.S.C. § 119

12)☐ Acknowledgment is made of a claim for foreign priority under 35 U.S.C. § 119(a)-(d) or (f).

Certified copies:

a)☐ All b)☐ Some** c)☐ None of the:

1.☐ Certified copies of the priority documents have been received.

2.☐ Certified copies of the priority documents have been received in Application No. _____.

3.☐ Copies of the certified copies of the priority documents have been received in this National Stage application from the International Bureau (PCT Rule 17.2(a)).

** See the attached detailed Office action for a list of the certified copies not received.

Attachment(s)

1) ☑ Notice of References Cited (PTO-892)

2) ☑ Information Disclosure Statement(s) (PTO/SB/08a and/or PTO/SB/08b) Paper No(s)/Mail Date _____.

3) ☐ Interview Summary (PTO-413) Paper No(s)/Mail Date _____.

4) ☐ Other: _____.

DETAILED ACTION

The present application is being examined under the pre-AIA first to invent provisions.

Drawings

The drawings are objected to under 37 CFR 1.83(a). The drawings must show every feature of the invention specified in the claims. Therefore, the limitation of claim 3 must be shown or the feature(s) canceled from the claim(s). No new matter should be entered.

Corrected drawing sheets in compliance with 37 CFR 1.121(d) are required in reply to the Office action to avoid abandonment of the application. Any amended replacement drawing sheet should include all of the figures appearing on the immediate prior version of the sheet, even if only one figure is being amended. The figure or figure number of an amended drawing should not be labeled as “amended.” If a drawing figure is to be canceled, the appropriate figure must be removed from the replacement sheet, and where necessary, the remaining figures must be renumbered and appropriate changes made to the brief description of the several views of the drawings for consistency. Additional replacement sheets may be necessary to show the renumbering of the remaining figures. Each drawing sheet submitted after the filing date of an application must be labeled in the top margin as either “Replacement Sheet” or “New Sheet” pursuant to 37 CFR 1.121(d). If the changes are not accepted by the examiner, the applicant will be notified and informed of any required corrective action in the next Office action. The objection to the drawings will not be held in abeyance.

Claim Rejections - 35 USC § 112

The following is a quotation of the first paragraph of 35 U.S.C. 112(a):

> (a) IN GENERAL.—The specification shall contain a written description of the invention, and of the manner and process of making and using it, in such full, clear, concise, and exact terms as to enable any person skilled in the art to which it pertains, or with which it is most nearly connected, to make and use the same, and shall set forth the best mode contemplated by the inventor or joint inventor of carrying out the invention.

The following is a quotation of the first paragraph of pre-AIA 35 U.S.C. 112:

> The specification shall contain a written description of the invention, and of the manner and process of making and using it, in such full, clear, concise, and exact terms as to enable any person skilled in the art to which it pertains, or with which it is most nearly connected, to make and use the same, and shall set forth the best mode contemplated by the inventor of carrying out his invention.

Claims 3 and 14 are rejected under 35 U.S.C. 112(a) or 35 U.S.C. 112 (pre-AIA), first paragraph, as failing to comply with the written description requirement. The claim(s) contains subject matter which was not described in the specification in such a way as to reasonably convey to one skilled in the relevant art that the inventor or a joint inventor, or for pre-AIA the inventor(s), at the time the application was filed, had possession of the claimed invention. While the original specification discloses a male end of the bowl fill outlet port for the embodiment of Figs. 1-3, it fails to disclose a male end as claimed for the embodiment of Figs. 4-9B where claim 3 is directed to. Hence, the limitation of claims 3 and 14 are considered as new matter.

The following is a quotation of 35 U.S.C. 112(b):

> (b) CONCLUSION.—The specification shall conclude with one or more claims particularly pointing out and distinctly claiming the subject matter which the inventor or a joint inventor regards as the invention.

The following is a quotation of 35 U.S.C. 112 (pre-AIA), second paragraph:

> The specification shall conclude with one or more claims particularly pointing out and distinctly claiming the subject matter which the applicant regards as his invention.

Claims 3 and 14 are rejected under 35 U.S.C. 112(b) or 35 U.S.C. 112 (pre-AIA), second paragraph, as being indefinite for failing to particularly point out and distinctly claim the subject matter which the inventor or a joint inventor, or for pre-AIA the applicant regards as the invention. It is unclear as to what structure is being referred to by the limitation of the claim. The claims are being examined as best understood.

Claim 4 is rejected under 35 U.S.C. 112(b) or 35 U.S.C. 112 (pre-AIA), second paragraph, as being indefinite for failing to particularly point out and distinctly claim the subject matter which the inventor or a joint inventor, or for pre-AIA the applicant regards as the invention. The limitations "the slot" in line 4 and "the extension of the toilet fill valve" in line 5 lack antecedent basis in the claim; therefore, it is unclear as to which structure(s) they are referring to. The claim is being examined as best understood.

Claim 8 is rejected under 35 U.S.C. 112(b) or 35 U.S.C. 112 (pre-AIA), second paragraph, as being indefinite for failing to particularly point out and distinctly claim the subject matter which the inventor or a joint inventor, or for pre-AIA the applicant regards as the invention. It is unclear as to whether the limitation "at least a portion of the body" line 1 it is referring to the "at least a portion of the body" in line 2 of claim 7 or another structure. The claim is being examined as best understood.

Claim Rejections - 35 USC § 102

The following is a quotation of the appropriate paragraphs of 35 U.S.C. 102 that form the basis for the rejections under this section made in this Office action:

> A person shall be entitled to a patent unless –
>
> (b) the invention was patented or described in a printed publication in this or a foreign country or in public use or on sale in this country, more than one year prior to the date of application for patent in the United States.

Claims 1-3, 5-7, 11-14, 17-19 and 22-25 are rejected under 35 U.S.C. 102(b) as being anticipated by US 5,708,991 (hereinafter DeMarco).

Regarding claim 1, DeMarco discloses a toilet system, comprising a toilet fill valve (16, 18 and 22 attached thereto) that comprises a body (18 and 22 attached thereto) comprising an extended portion (22 attached to 18) that forms a bowl fill outlet port (port attached to 44), a water inlet (12) configured to couple to a water source, and a tank water outlet (20) configured to output water to a toilet tank (10); a bowl fill valve (36) configured to attach directly to the body (18 and 22 attached thereto) of the toilet fill valve, the bowl fill valve (see Fig. 2) comprising a bowl fill valve inlet port (44) configured to mate directly to the bowl fill outlet port of the body of the toilet fill valve (see Fig. 1), a bowl fill valve outlet port (46); a protrusion (where 44 is pointing to in Fig. 2) configured to insert into a recess (the expanded part of 22 that received 44 as shown in Fig. 1) of the toilet fill valve and retain the bowl fill valve to the toilet fill valve; and a water flow adjustment handle (40); and a tube (22 that attached to 46) configured to attach directly to the bowl fill valve outlet port (46) of the bowl fill valve (see Fig. 1).

Regarding claim 2, the toilet system of claim 1, wherein the bowl fill valve (see Fig. 2) further comprises a slot (defined between the curved protrusion and horizontal parts of 44) configured to receive an extension (the part of 22 that overlap the horizontal part of 44 as shown in Fig. 1) of the toilet fill valve.

Regarding claim 3, the toilet system of claim 1, wherein the bowl fill outlet port comprises a male end (the portion of 18 where 22 is attached to), and wherein the bowl fill valve inlet port (22 attached to 44 together form the inlet port) comprises a female receptacle (see Fig. 1) for the male end of the bowl fill outlet port.

Regarding claim 5, the toilet system of claim 1, wherein the bowl fill outlet port (see Fig. 1) extends radially from a longitudinal axis of the body of the toilet fill valve.

Regarding claim 6, the toilet system of claim 5, wherein the toilet fill valve further comprises an actuation arm (32) that extends radially from the longitudinal axis of the body of the toilet fill valve, and wherein the actuation arm is angularly offset relative to the bowl fill outlet port (see Fig. 1).

Regarding claim 7, the toilet system of claim 1, wherein the toilet fill valve further comprises a float (34) configured to move along at least a portion of the body of the toilet fill valve in the vertical direction.

Regarding claim 11, the toilet system of claim 1, wherein the water inlet (12) of the toilet fill valve comprises a threaded coupling (see Fig. 1).

Regarding claim 12, DeMarco discloses a bowl fill valve (see Fig. 2) comprising a bowl fill valve inlet port (44) configured to mate directly to a bowl fill outlet port (port of 22 attached to 44) of a body of a toilet fill valve (16, 18 and 22 attached thereto); a bowl fill valve outlet port (46) configured to attach directly to a tube (22) that provides water from the bowl fill valve outlet port to an overflow tube (24); a protrusion (where 44 is pointing to in Fig. 2) configured to insert into a recess (the expanded part of 22 that received 44 as shown in Fig. 1) of the toilet fill valve and retain the bowl fill valve to the toilet fill valve; and a water flow adjustment handle (40) being configured to adjust water flow from the bowl fill valve inlet port to the bowl fill valve outlet port.

Regarding claim 13, the bowl fill valve of claim 12, wherein the bowl fill valve (see Fig. 2) further comprises a slot (defined between the curved protrusion and horizontal

parts of 44) configured to receive an extension (the part of 22 that overlap the horizontal part of 44 as shown in Fig. 1) of the toilet fill valve.

Regarding claim 14, the bowl fill valve of claim 12, wherein the bowl fill outlet port comprises a male end (the portion of 18 where 22 is attached to), and wherein the bowl fill valve inlet port (22 attached to 44 together form the inlet port) comprises a female receptacle (see Fig. 1) for the male end of the bowl fill outlet port.

Regarding claims 17 and 19, the method as claimed is inherent during the installation of the DeMarco toilet system as discussed above with respect to claim 1.

Regarding claim 18, the method as claimed is inherent during the installation of the DeMarco toilet system as discussed above with respect to claim 2.

Regarding claim 22, DeMarco discloses a bowl fill valve (see Fig. 2) comprising a bowl fill valve inlet port (44) configured to mate directly to a bowl fill outlet port (port of 22 attached to 44) of a body of a toilet fill valve (16, 18 and 22 attached thereto); a bowl fill valve outlet port (46) configured to attach directly to a tube (22) that provides water from the bowl fill valve outlet port to an overflow tube (24); and means (40) for adjusting water flow out of the bowl fill valve outlet port.

Regarding claim 23, the bowl fill valve of claim 22, wherein the bowl fill valve (see Fig. 2) further comprises a slot (defined between the curved protrusion and horizontal parts of 44) configured to receive an extension (the part of 22 that overlap the horizontal part of 44 as shown in Fig. 1) of the toilet fill valve.

Regarding claim 24, the bowl fill valve of claim 22, further comprising a protrusion (where 44 is pointing to in Fig. 2) configured to insert into a recess (the expanded part

of 22 that received 44 as shown in Fig. 1) of the toilet fill valve and retain the bowl fill valve to the toilet fill valve.

Regarding claim 25, the bowl fill valve of claim 22, wherein the means (40) for adjusting water flow out of the bowl fill valve outlet port comprises an adjustment handle.

Claim Rejections - 35 USC § 103

The following is a quotation of 35 U.S.C. 103(a) which forms the basis for all obviousness rejections set forth in this Office action:

> (a) A patent may not be obtained though the invention is not identically disclosed or described as set forth in section 102 of this title, if the differences between the subject matter sought to be patented and the prior art are such that the subject matter as a whole would have been obvious at the time the invention was made to a person having ordinary skill in the art to which said subject matter pertains. Patentability shall not be negatived by the manner in which the invention was made.

Claims 4, 9-10, 15-16 and 20-21 are rejected under 35 U.S.C. 103(a) as being unpatentable over DeMarco in view US 6,409,221 (hereinafter Robinson).

DeMarco, as discussed above, teaches the protrusion of the bowl fill valve is an annular protrusion (where 44 is pointing in Fig. 2) located on a bowl fill valve side wall of the bowl fill valve, wherein the recess of the toilet fill valve is an annular recess (the expanded part of 22 that received the protrusion as shown in Fig. 1) located on a bowl fill outlet port side wall of the bowl fill outlet port. DeMarco, however, does not teaches specific of the clamp, snap-fit, or the slot of the bowl fill valve is located on the bowl fill valve side wall, and wherein the extension of the toilet fill valve is a rib on the bowl fill outlet port side wall. Attention is directed to the Robinson reference which teaches a coupling (see figures) between pipes or conduits having the specific clamp (between members 210 and 310), snap-fit (between members 212 and 312), or the slot and rib (between members 210 and 310) as claimed. It would be obvious to one of ordinary

skill in the art at the time the invention was made to substitute the connection coupling of DeMarco with the specific coupling as taught by Robinson as an alternative equivalent coupling between pipes or conduits.

Claim 8 is rejected under 35 U.S.C. 103(a) as being unpatentable over DeMarco in view US 4,100,928 (hereinafter Schoepe).

Regarding claim 8, DeMarco teaches all of the claimed limitations as discussed above regarding claim 7 except for at least a portion of the body of the toilet fill valve extends through the float. Attention is directed to the Schoepe reference which teaches an analogous toilet system having a toilet fill valve (see Fig. 1) having a portion of a body (44) extends through a float (38). It would be obvious to one of ordinary skill in the art at the time the invention was made to substitute the float system of DeMarco with the float system of Schoepe as an alternative equivalent valve operating float for a toilet fill valve.

Double Patenting

The nonstatutory double patenting rejection is based on a judicially created doctrine grounded in public policy (a policy reflected in the statute) so as to prevent the unjustified or improper timewise extension of the "right to exclude" granted by a patent and to prevent possible harassment by multiple assignees. A nonstatutory double patenting rejection is appropriate where the conflicting claims are not identical, but at least one examined application claim is not patentably distinct from the reference claim(s) because the examined application claim is either anticipated by, or would have

been obvious over, the reference claim(s). See, e.g., *In re Berg*, 140 F.3d 1428, 46 USPQ2d 1226 (Fed. Cir. 1998); *In re Goodman*, 11 F.3d 1046, 29 USPQ2d 2010 (Fed. Cir. 1993); *In re Longi*, 759 F.2d 887, 225 USPQ 645 (Fed. Cir. 1985); *In re Van Ornum*, 686 F.2d 937, 214 USPQ 761 (CCPA 1982); *In re Vogel*, 422 F.2d 438, 164 USPQ 619 (CCPA 1970); *In re Thorington*, 418 F.2d 528, 163 USPQ 644 (CCPA 1969).

A timely filed terminal disclaimer in compliance with 37 CFR 1.321(c) or 1.321(d) may be used to overcome an actual or provisional rejection based on nonstatutory double patenting provided the reference application or patent either is shown to be commonly owned with the examined application, or claims an invention made as a result of activities undertaken within the scope of a joint research agreement. See MPEP § 717.02 for applications subject to examination under the first inventor to file provisions of the AIA as explained in MPEP § 2159. See MPEP §§ 706.02(l)(1) - 706.02(l)(3) for applications not subject to examination under the first inventor to file provisions of the AIA. A terminal disclaimer must be signed in compliance with 37 CFR 1.321(b).

The USPTO Internet website contains terminal disclaimer forms which may be used. Please visit www.uspto.gov/patent/patents-forms. The filing date of the application in which the form is filed determines what form (e.g., PTO/SB/25, PTO/SB/26, PTO/AIA/25, or PTO/AIA/26) should be used. A web-based eTerminal Disclaimer may be filled out completely online using web-screens. An eTerminal Disclaimer that meets all requirements is auto-processed and approved immediately upon submission. For more information about eTerminal Disclaimers, refer to www.uspto.gov/patents/process/file/efs/guidance/eTD-info-I.jsp.

Claims 1-25 are rejected on the ground of nonstatutory double patenting as being unpatentable over claim 1 of U.S. Patent No. 7,743,436; claims 1-10 of U.S. Patent No. 8,104,105; claims 1-20 of U.S. Patent No. 8,650,671; claims 1-24 of U.S. Patent No. 9,103,105; claims 1-20 of U.S. Patent No. 9,139,993; and claims 1-18 of U.S. Patent No. 10,519,639. Although the claims at issue are not identical, they are not patentably distinct from each other because they are an obvious broader version of the essential elements of those in the patents.

Conclusion

Any inquiry concerning this communication or earlier communications from the examiner should be directed to TUAN N NGUYEN whose telephone number is (571)272-4892. The examiner can normally be reached on Mon-Fri 8-4.

If attempts to reach the examiner by telephone are unsuccessful, the examiner's supervisor, David Angwin can be reached on (571) 270-3735. The fax phone number for the organization where this application or proceeding is assigned is 571-273-8300.

Information regarding the status of an application may be obtained from the Patent Application Information Retrieval (PAIR) system. Status information for published applications may be obtained from either Private PAIR or Public PAIR. Status information for unpublished applications is available through Private PAIR only. For more information about the PAIR system, see http://pair-direct.uspto.gov. Should you have questions on access to the Private PAIR system, contact the Electronic Business Center (EBC) at 866-217-9197 (toll-free). If you would like assistance from a USPTO Customer Service Representative or access to the automated information system, call 800-786-9199 (IN USA OR CANADA) or 571-272-1000.

/TUAN N NGUYEN/
Primary Examiner, Art Unit 3754

Notice of References Cited	Application/Control No. 16/686,328	Applicant(s)/Patent Under Reexamination Schuster et al.	
	Examiner TUAN N NGUYEN	Art Unit 3754	Page 1 of 1

U.S. PATENT DOCUMENTS

*		Document Number Country Code-Number-Kind Code	Date MM-YYYY	Name	CPC Classification	US Classification
*	A	US-10519639-B1	12-2019	Schuster; Michael J.	E03D1/34	1/1
*	B	US-4100928-A	07-1978	Schoepe; Adolf	F16K31/34	137/15.18
*	C	US-3086217-A	04-1963	BARLOW EDWARD H	E03D1/286	4/367
	D					
	E					
	F					
	G					
	H					
	I					
	J					
	K					
	L					
	M					

FOREIGN PATENT DOCUMENTS

*		Document Number Country Code-Number-Kind Code	Date MM-YYYY	Country	Name	CPC Classification
	N					
	O					
	P					
	Q					
	R					
	S					
	T					

NON-PATENT DOCUMENTS

*		Include as applicable: Author, Title Date, Publisher, Edition or Volume, Pertinent Pages)
	U	
	V	
	W	
	X	

*A copy of this reference is not being furnished with this Office action. (See MPEP § 707.05(a).)
Dates in MM-YYYY format are publication dates. Classifications may be US or foreign.

Search Notes	Application/Control No.	Applicant(s)/Patent Under Reexamination
	16/686,328	Schuster et al.
	Examiner	**Art Unit**
	TUAN N NGUYEN	3754

CPC - Searched*		
Symbol	**Date**	**Examiner**
E03D 1/34	01/08/2020	TN
B23P 15/001	01/08/2020	TN

CPC Combination Sets - Searched*		
Symbol	**Date**	**Examiner**

US Classification - Searched*			
Class	**Subclass**	**Date**	**Examiner**
4	383, 418	01/08/2020	TN

* See search history printout included with this form or the SEARCH NOTES box below to determine the scope of the search.

Search Notes		
Search Notes	**Date**	**Examiner**
INVENTOR SEARCHED	01/08/2020	TN

Interference Search			
US Class/CPC Symbol	**US Subclass/CPC Group**	**Date**	**Examiner**

Fluidmaster, Inc. - EX1006, Page 108
IPR2024-00633 (Fluidmaster Inc v. Danco Inc)

Doc code: IDS
Doc description: Information Disclosure Statement (IDS) Filed

PTO/SB/08a (02-18)
Approved for use through 11/30/2020. OMB 0651-0031
U.S. Patent and Trademark Office; U.S. DEPARTMENT OF COMMERCE
Under the Paperwork Reduction Act of 1995, no persons are required to respond to a collection of information unless it contains a valid OMB control number.

INFORMATION DISCLOSURE STATEMENT BY APPLICANT (Not for submission under 37 CFR 1.99)		
	Application Number	
	Filing Date	
	First Named Inventor	Michael J. Schuster
	Art Unit	
	Examiner Name	
	Attorney Docket Number	171401-1037

U.S.PATENTS						
Examiner Initial*	Cite No	Patent Number	Kind Code[1]	Issue Date	Name of Patentee or Applicant of cited Document	Pages,Columns,Lines where Relevant Passages or Relevant Figures Appear
	1	1113057	A	1914-10-06	Schumann	
	2	1787601	A	1931-01-06	Swanberg	
	3	2087503	A	1937-07-20	Clemmons	
	4	2465866	A	1949-03-29	Gaines	
	5	2512176	A	1950-06-20	Shaffer	
	6	2736037	A	1956-02-28	Hardie	
	7	2791235	A	1957-05-07	Smith	
	8	2799865	A	1957-07-23	Dufault	

ALL REFERENCES CONSIDERED EXCEPT WHERE LINED THROUGH. /T.N.N/

INFORMATION DISCLOSURE STATEMENT BY APPLICANT (Not for submission under 37 CFR 1.99)		
	Application Number	
	Filing Date	
	First Named Inventor	Michael J. Schuster
	Art Unit	
	Examiner Name	
	Attorney Docket Number	171401-1037

	9	3040769	A	1962-06-26	Lamb	
	10	3086546	A	1963-04-23	Brown	
	11	3172128	A	1965-03-09	Ducey	
	12	3321972	A	1967-05-30	Goldtrap	
	13	3457947	A	1969-07-29	Fitzgerald	
	14	3744064	A	1973-07-10	Preston	
	15	3762395	A	1973-10-02	Taylor	
	16	3782686	A	1974-01-01	Cowie	
	17	3986216	A	1976-10-19	Davis et al.	
	18	3994628	A	1976-11-30	Kemper	
	19	4007498	A	1977-02-15	Pearson	

EFS Web 2.1.18 ALL REFERENCES CONSIDERED EXCEPT WHERE LINED THROUGH. /T.N.N/

INFORMATION DISCLOSURE STATEMENT BY APPLICANT (Not for submission under 37 CFR 1.99)		
	Application Number	
	Filing Date	
	First Named Inventor	Michael J. Schuster
	Art Unit	
	Examiner Name	
	Attorney Docket Number	171401-1037

	20	4017916	A	1977-04-19	Pearson	
	21	4032822	A	1977-06-28	Un	
	22	4090532	A	1978-05-23	Story, Jr.	
	23	4134164	A	1979-01-16	Sanmartin Rial	
	24	4145775	A	1979-03-27	Butler	
	25	4351071	A	1982-09-28	Clar	
	26	4392260	A	1983-07-12	Bensen	
	27	4420845	A	1983-12-20	Antunez	
	28	4505231	A	1985-03-19	Syler	
	29	4527295	A	1985-07-09	Lacore	
	30	4700413	A	1987-10-20	Lopez	

ALL REFERENCES CONSIDERED EXCEPT WHERE LINED THROUGH. /T.N.N/

INFORMATION DISCLOSURE STATEMENT BY APPLICANT (Not for submission under 37 CFR 1.99)		
	Application Number	
	Filing Date	
	First Named Inventor	Michael J. Schuster
	Art Unit	
	Examiner Name	
	Attorney Docket Number	171401-1037

	31	4707867	A	1987-11-24	Kawabe et al.	
	32	4764996	A	1988-08-23	Pino	
	33	4770388	A	1988-09-13	Carman	
	34	4793588	A	1988-12-27	Laverty, Jr.	
	35	4898124	A	1990-02-06	Granberg et al.	
	36	4918764	A	1990-04-24	Haselswerdt et al.	
	37	4980932	A	1991-01-01	Stemples	
	38	5007452	A	1991-04-16	Antunez	
	39	5036553	A	1991-08-06	Sanderson	
	40	5052060	A	1991-10-01	Makita et al.	
	41	5083323	A	1992-01-28	Cannan	

ALL REFERENCES CONSIDERED EXCEPT WHERE LINED THROUGH. /T.N.N/

INFORMATION DISCLOSURE STATEMENT BY APPLICANT (Not for submission under 37 CFR 1.99)		
	Application Number	
	Filing Date	
	First Named Inventor	Michael J. Schuster
	Art Unit	
	Examiner Name	
	Attorney Docket Number	171401-1037

	42	5123628	A	1992-06-23	Yu	
	43	5134729	A	1992-08-04	Shaw	
	44	5228152	A	1993-07-20	Fraley	
	45	5232011	A	1993-08-03	Royalty	
	46	5245710	A	1993-09-21	Haselswerdt et al.	
	47	5327931	A	1994-07-12	Royalty et al.	
	48	5362026	A	1994-11-08	Kobayashi et al.	
	49	5432959	A	1995-07-18	Ellsworth et al.	
	50	5442820	A	1995-08-22	Becker	
	51	5469586	A	1995-11-28	Tsutsui et al.	
	52	5542448	A	1996-08-06	Campbell et al.	

ALL REFERENCES CONSIDERED EXCEPT WHERE LINED THROUGH. /T.N.N/

INFORMATION DISCLOSURE STATEMENT BY APPLICANT (Not for submission under 37 CFR 1.99)		
	Application Number	
	Filing Date	
	First Named Inventor	Michael J. Schuster
	Art Unit	
	Examiner Name	
	Attorney Docket Number	171401-1037

	53	5624073	A	1997-04-29	Mueller et al.	
	54	5708991	A	1998-01-20	DeMarco	
	55	5715860	A	1998-02-10	Horad	
	56	5742951	A	1998-04-28	Wright et al.	
	57	5775366	A	1998-07-07	Ray et al.	
	58	5794279	A	1998-08-18	Schwartz	
	59	5862537	A	1999-01-26	Osmond	
	60	5926868	A	1999-07-27	Bjerke	
	61	6047725	A	2000-04-11	Gish et al.	
	62	6202227	B1	2001-03-20	Gurowitz	
	63	6209576	B1	2001-04-03	Davis	

EFS Web 2.1.18 ALL REFERENCES CONSIDERED EXCEPT WHERE LINED THROUGH. /T.N.N/

INFORMATION DISCLOSURE STATEMENT BY APPLICANT (Not for submission under 37 CFR 1.99)		
	Application Number	
	Filing Date	
	First Named Inventor	Michael J. Schuster
	Art Unit	
	Examiner Name	
	Attorney Docket Number	171401-1037

	64	6219856	B1	2001-11-24	Alles	
	65	6263519	B1	2001-07-04	Parsons et al.	
	66	6295660	B1	2001-10-02	Schuster	
	67	6385788	B1	2002-05-14	Wasielewski	
	68	6409221	B1	2002-06-25	Robinson et al.	
	69	6560790	B2	2003-05-12	Saar et al.	
	70	6823889	B1	2004-11-30	Schuster	
	71	7743436	B1	2010-06-29	Schuster et al	
	72	8104105	B1	2010-06-29	Schuster et al.	
	73	8650671	B1	2014-02-18	Schuster et al.	
	74	9103105	B1	2015-08-11	Schuster et al.	

ALL REFERENCES CONSIDERED EXCEPT WHERE LINED THROUGH. /T.N.N/

INFORMATION DISCLOSURE STATEMENT BY APPLICANT (Not for submission under 37 CFR 1.99)	Application Number	
	Filing Date	
	First Named Inventor	Michael J. Schuster
	Art Unit	
	Examiner Name	
	Attorney Docket Number	171401-1037

	75	9139993	B1	2015-09-22	Schuster et al.	
	76	136128	A	1873-02-25	Bralley	
	77	994746	A	1911-06-13	Haynes	
	78	996743	A	1911-07-04	Yancey	

If you wish to add additional U.S. Patent citation information please click the Add button.

U.S.PATENT APPLICATION PUBLICATIONS

Examiner Initial*	Cite No	Publication Number	Kind Code[1]	Publication Date	Name of Patentee or Applicant of cited Document	Pages,Columns,Lines where Relevant Passages or Relevant Figures Appear
	1	20020092090	A1	2002-07-18	Johnson	
	2	20020162166	A1	2002-11-07	Saar et al.	
	3	20040199989	A1	2004-10-14	Trolio	

If you wish to add additional U.S. Published Application citation information please click the Add button.

FOREIGN PATENT DOCUMENTS

Examiner Initial*	Cite No	Foreign Document Number[3]	Country Code[2]i	Kind Code[4]	Publication Date	Name of Patentee or Applicant of cited Document	Pages,Columns,Lines where Relevant Passages or Relevant Figures Appear	T[5]

ALL REFERENCES CONSIDERED EXCEPT WHERE LINED THROUGH. /T.N.N/

INFORMATION DISCLOSURE STATEMENT BY APPLICANT (Not for submission under 37 CFR 1.99)		
	Application Number	
	Filing Date	
	First Named Inventor	Michael J. Schuster
	Art Unit	
	Examiner Name	
	Attorney Docket Number	171401-1037

	1							☐

If you wish to add additional Foreign Patent Document citation information please click the Add button

NON-PATENT LITERATURE DOCUMENTS

Examiner Initials*	Cite No	Include name of the author (in CAPITAL LETTERS), title of the article (when appropriate), title of the item (book, magazine, journal, serial, symposium, catalog, etc), date, pages(s), volume-issue number(s), publisher, city and/or country where published.	T[5]
	1	US Patent 6,823,889, File History (2004-2005) Great-Great-Great-Great-Grandparent Patent to this Application (copy not attached).	☐
	2	US Patent 7,743,436, File History (2004-2010) Great-Great-Great-Grandparent Patent to this Application (copy not attached).	☐
	3	US Patent 8,104,105, File History (2010-2012) Great-Great-Grandparent to this Application (copy not attached).	☐
	4	US Patent 8,650,671 File History (2012-2014) Great-Grandparent to this Application (copy not attached).	☐
	5	US Patent 9,139,993 File History (2014-2015) Grandparent to this Application (copy not attached).	☐
	6	US Patent 9,103,105 File History (2014-2015) Sibling of the Grandparent to this Application (copy not attached).	☐
	7	US Application 14/856,901 File History (2015-2019) Parent to this Application (copy not attached).	☐

If you wish to add additional non-patent literature document citation information please click the Add button

ALL REFERENCES CONSIDERED EXCEPT WHERE LINED THROUGH. /T.N.N/

INFORMATION DISCLOSURE STATEMENT BY APPLICANT (Not for submission under 37 CFR 1.99)		
	Application Number	
	Filing Date	
	First Named Inventor	Michael J. Schuster
	Art Unit	
	Examiner Name	
	Attorney Docket Number	171401-1037

EXAMINER SIGNATURE			
Examiner Signature	/TUAN N NGUYEN/	Date Considered	01/07/2020

*EXAMINER: Initial if reference considered, whether or not citation is in conformance with MPEP 609. Draw line through a citation if not in conformance and not considered. Include copy of this form with next communication to applicant.

[1] See Kind Codes of USPTO Patent Documents at www.USPTO.GOV or MPEP 901.04. [2] Enter office that issued the document, by the two-letter code (WIPO Standard ST.3). [3] For Japanese patent documents, the indication of the year of the reign of the Emperor must precede the serial number of the patent document. [4] Kind of document by the appropriate symbols as indicated on the document under WIPO Standard ST.16 if possible. [5] Applicant is to place a check mark here if English language translation is attached.

EFS Web 2.1.18

ALL REFERENCES CONSIDERED EXCEPT WHERE LINED THROUGH. /T.N.N/

INFORMATION DISCLOSURE STATEMENT BY APPLICANT (Not for submission under 37 CFR 1.99)		
	Application Number	
	Filing Date	
	First Named Inventor	Michael J. Schuster
	Art Unit	
	Examiner Name	
	Attorney Docket Number	171401-1037

CERTIFICATION STATEMENT

Please see 37 CFR 1.97 and 1.98 to make the appropriate selection(s):

☐ That each item of information contained in the information disclosure statement was first cited in any communication from a foreign patent office in a counterpart foreign application not more than three months prior to the filing of the information disclosure statement. See 37 CFR 1.97(e)(1).

OR

☐ That no item of information contained in the information disclosure statement was cited in a communication from a foreign patent office in a counterpart foreign application, and, to the knowledge of the person signing the certification after making reasonable inquiry, no item of information contained in the information disclosure statement was known to any individual designated in 37 CFR 1.56(c) more than three months prior to the filing of the information disclosure statement. See 37 CFR 1.97(e)(2).

☐ See attached certification statement.

☐ The fee set forth in 37 CFR 1.17 (p) has been submitted herewith.

☒ A certification statement is not submitted herewith.

SIGNATURE

A signature of the applicant or representative is required in accordance with CFR 1.33, 10.18. Please see CFR 1.4(d) for the form of the signature.

Signature	/RDG/	Date (YYYY-MM-DD)	
Name/Print	Robert D. Gravois	Registration Number	67224

This collection of information is required by 37 CFR 1.97 and 1.98. The information is required to obtain or retain a benefit by the public which is to file (and by the USPTO to process) an application. Confidentiality is governed by 35 U.S.C. 122 and 37 CFR 1.14. This collection is estimated to take 1 hour to complete, including gathering, preparing and submitting the completed application form to the USPTO. Time will vary depending upon the individual case. Any comments on the amount of time you require to complete this form and/or suggestions for reducing this burden, should be sent to the Chief Information Officer, U.S. Patent and Trademark Office, U.S. Department of Commerce, P.O. Box 1450, Alexandria, VA 22313-1450. DO NOT SEND FEES OR COMPLETED FORMS TO THIS ADDRESS. **SEND TO: Commissioner for Patents, P.O. Box 1450, Alexandria, VA 22313-1450.**

ALL REFERENCES CONSIDERED EXCEPT WHERE LINED THROUGH. /T.N.N/

Privacy Act Statement

The Privacy Act of 1974 (P.L. 93-579) requires that you be given certain information in connection with your submission of the attached form related to a patent application or patent. Accordingly, pursuant to the requirements of the Act, please be advised that: (1) the general authority for the collection of this information is 35 U.S.C. 2(b)(2); (2) furnishing of the information solicited is voluntary; and (3) the principal purpose for which the information is used by the U.S. Patent and Trademark Office is to process and/or examine your submission related to a patent application or patent. If you do not furnish the requested information, the U.S. Patent and Trademark Office may not be able to process and/or examine your submission, which may result in termination of proceedings or abandonment of the application or expiration of the patent.

The information provided by you in this form will be subject to the following routine uses:

1. The information on this form will be treated confidentially to the extent allowed under the Freedom of Information Act (5 U.S.C. 552) and the Privacy Act (5 U.S.C. 552a). Records from this system of records may be disclosed to the Department of Justice to determine whether the Freedom of Information Act requires disclosure of these record s.

2. A record from this system of records may be disclosed, as a routine use, in the course of presenting evidence to a court, magistrate, or administrative tribunal, including disclosures to opposing counsel in the course of settlement negotiations.

3. A record in this system of records may be disclosed, as a routine use, to a Member of Congress submitting a request involving an individual, to whom the record pertains, when the individual has requested assistance from the Member with respect to the subject matter of the record.

4. A record in this system of records may be disclosed, as a routine use, to a contractor of the Agency having need for the information in order to perform a contract. Recipients of information shall be required to comply with the requirements of the Privacy Act of 1974, as amended, pursuant to 5 U.S.C. 552a(m).

5. A record related to an International Application filed under the Patent Cooperation Treaty in this system of records may be disclosed, as a routine use, to the International Bureau of the World Intellectual Property Organization, pursuant to the Patent Cooperation Treaty.

6. A record in this system of records may be disclosed, as a routine use, to another federal agency for purposes of National Security review (35 U.S.C. 181) and for review pursuant to the Atomic Energy Act (42 U.S.C. 218(c)).

7. A record from this system of records may be disclosed, as a routine use, to the Administrator, General Services, or his/her designee, during an inspection of records conducted by GSA as part of that agency's responsibility to recommend improvements in records management practices and programs, under authority of 44 U.S.C. 2904 and 2906. Such disclosure shall be made in accordance with the GSA regulations governing inspection of records for this purpose, and any other relevant (i.e., GSA or Commerce) directive. Such disclosure shall not be used to make determinations about individuals.

8. A record from this system of records may be disclosed, as a routine use, to the public after either publication of the application pursuant to 35 U.S.C. 122(b) or issuance of a patent pursuant to 35 U.S.C. 151. Further, a record may be disclosed, subject to the limitations of 37 CFR 1.14, as a routine use, to the public if the record was filed in an application which became abandoned or in which the proceedings were terminated and which application is referenced by either a published application, an application open to public inspections or an issued patent.

9. A record from this system of records may be disclosed, as a routine use, to a Federal, State, or local law enforcement agency, if the USPTO becomes aware of a violation or potential violation of law or regulation.

ALL REFERENCES CONSIDERED EXCEPT WHERE LINED THROUGH. /T.N.N/

UNITED STATES PATENT AND TRADEMARK OFFICE

UNITED STATES DEPARTMENT OF COMMERCE
United States Patent and Trademark Office
Address: COMMISSIONER FOR PATENTS
P.O. Box 1450
Alexandria, Virginia 22313-1450
www.uspto.gov

APPLICATION NO.	FILING DATE	FIRST NAMED INVENTOR	ATTORNEY DOCKET NO.	CONFIRMATION NO.
16/686,328	11/18/2019	Michael J. Schuster	171401-1037	6118

24504 7590 12/12/2019
THOMAS | HORSTEMEYER, LLP
3200 WINDY HILL ROAD, SE
SUITE 1600E
ATLANTA, GA 30339

EXAMINER
NGUYEN, TUAN N

ART UNIT	PAPER NUMBER
3754	

NOTIFICATION DATE	DELIVERY MODE
12/12/2019	ELECTRONIC

Please find below and/or attached an Office communication concerning this application or proceeding.

The time period for reply, if any, is set in the attached communication.

Notice of the Office communication was sent electronically on above-indicated "Notification Date" to the following e-mail address(es):

docketing@thomashorstemeyer.com
ozzie.liggins@tkhr.com
uspatents@tkhr.com

PTOL-90A (Rev. 04/07)

Decision Granting Request for Prioritized Examination (Track I)	**Application No.** 16/686,328	**Applicant(s)** Schuster et al.	
	Examiner BRIAN W BROWN	**Art Unit** OPET	**AIA (FITF) Status** No

1. THE REQUEST FILED 18 November 2019 IS **GRANTED** .

   The above-identified application has met the requirements for prioritized examination
   A. ☑ for an original nonprovisional application (Track I).
   B. ☐ for an application undergoing continued examination (RCE).

2. **The above-identified application will undergo prioritized examination**. The application will be accorded special status throughout its entire course of prosecution until one of the following occurs:

   A. filing a **petition for extension of time** to extend the time period for filing a reply;

   B. filing an **amendment to amend the application to contain more than four independent claims, more than thirty total claims** , or a multiple dependent claim;

   C. filing a **request for continued examination** ;

   D. filing a notice of appeal;

   E. filing a request for suspension of action;

   F. mailing of a notice of allowance;

   G. mailing of a final Office action;

   H. completion of examination as defined in 37 CFR 41.102; or

   I. abandonment of the application.

Telephone inquiries with regard to this decision should be directed to BRIAN BROWN at (571)272-5338. In his/her absence, calls may be directed to Petition Help Desk at (571) 272-3282.

/BRIAN W BROWN/ Petitions Examiner, OPET	

U.S. Patent and Trademark Office
PTO-2298 (Rev. 02-2012)

UNITED STATES PATENT AND TRADEMARK OFFICE

UNITED STATES DEPARTMENT OF COMMERCE
United States Patent and Trademark Office
Address: COMMISSIONER FOR PATENTS
P.O. Box 1450
Alexandria, Virginia 22313-1450
www.uspto.gov

APPLICATION NUMBER	FILING or 371(c) DATE	GRP ART UNIT	FIL FEE REC'D	ATTY.DOCKET.NO	TOT CLAIMS	IND CLAIMS
16/686,328	11/18/2019	3754	2680	171401-1037	25	4

CONFIRMATION NO. 6118

FILING RECEIPT

24504
THOMAS | HORSTEMEYER, LLP
3200 WINDY HILL ROAD, SE
SUITE 1600E
ATLANTA, GA 30339

OC000000113092543

Date Mailed: 12/06/2019

Receipt is acknowledged of this non-provisional utility patent application. The application will be taken up for examination in due course. Applicant will be notified as to the results of the examination. Any correspondence concerning the application must include the following identification information: the U.S. APPLICATION NUMBER, FILING DATE, NAME OF FIRST INVENTOR, and TITLE OF INVENTION. Fees transmitted by check or draft are subject to collection.

Please verify the accuracy of the data presented on this receipt. If an error is noted on this Filing Receipt, please submit a written request for a corrected Filing Receipt, including a properly marked-up ADS showing the changes with strike-through for deletions and underlining for additions. If you received a "Notice to File Missing Parts" or other Notice requiring a response for this application, please submit any request for correction to this Filing Receipt with your reply to the Notice. When the USPTO processes the reply to the Notice, the USPTO will generate another Filing Receipt incorporating the requested corrections provided that the request is grantable.

Inventor(s)

Michael J. Schuster, Shorewood, IL;
Larry Schneider, Wadsworth, IL;

Applicant(s)

Danco, Inc., Irving, TX

Power of Attorney: The patent practitioners associated with Customer Number 24504

Domestic Priority data as claimed by applicant

This application is a CON of 14/856,901 09/17/2015
which is a CON of 14/164,424 01/27/2014 PAT 9139993
which is a CON of 13/346,355 01/09/2012 PAT 8650671
which is a CON of 12/786,904 05/25/2010 PAT 8104105
which is a CON of 10/958,797 10/05/2004 PAT 7743436
which is a CIP of 10/798,606 03/11/2004 PAT 6823889

Foreign Applications for which priority is claimed (You may be eligible to benefit from the **Patent Prosecution Highway** program at the USPTO. Please see http://www.uspto.gov for more information.) - None.
Foreign application information must be provided in an Application Data Sheet in order to constitute a claim to foreign priority. See 37 CFR 1.55 and 1.76.

Permission to Access Application via Priority Document Exchange: Yes

Permission to Access Search Results: Yes

Applicant may provide or rescind an authorization for access using Form PTO/SB/39 or Form PTO/SB/69 as appropriate.

If Required, Foreign Filing License Granted: 12/04/2019
The country code and number of your priority application, to be used for filing abroad under the Paris Convention, is **US 16/686,328**
Projected Publication Date: Request for Non-Publication Acknowledged
Non-Publication Request: Yes
Early Publication Request: No
Title

TOILET VALVE

Preliminary Class

004

Statement under 37 CFR 1.55 or 1.78 for AIA (First Inventor to File) Transition Applications: No

PROTECTING YOUR INVENTION OUTSIDE THE UNITED STATES

Since the rights granted by a U.S. patent extend only throughout the territory of the United States and have no effect in a foreign country, an inventor who wishes patent protection in another country must apply for a patent in a specific country or in regional patent offices. Applicants may wish to consider the filing of an international application under the Patent Cooperation Treaty (PCT). An international (PCT) application generally has the same effect as a regular national patent application in each PCT-member country. The PCT process **simplifies** the filing of patent applications on the same invention in member countries, but **does not result** in a grant of "an international patent" and does not eliminate the need of applicants to file additional documents and fees in countries where patent protection is desired.

Almost every country has its own patent law, and a person desiring a patent in a particular country must make an application for patent in that country in accordance with its particular laws. Since the laws of many countries differ in various respects from the patent law of the United States, applicants are advised to seek guidance from specific foreign countries to ensure that patent rights are not lost prematurely.

Applicants also are advised that in the case of inventions made in the United States, the Director of the USPTO must issue a license before applicants can apply for a patent in a foreign country. The filing of a U.S. patent application serves as a request for a foreign filing license. The application's filing receipt contains further information and guidance as to the status of applicant's license for foreign filing.

Applicants may wish to consult the USPTO booklet, "General Information Concerning Patents" (specifically, the section entitled "Treaties and Foreign Patents") for more information on timeframes and deadlines for filing foreign patent applications. The guide is available either by contacting the USPTO Contact Center at 800-786-9199, or it can be viewed on the USPTO website at http://www.uspto.gov/web/offices/pac/doc/general/index.html.

For information on preventing theft of your intellectual property (patents, trademarks and copyrights), you may wish to consult the U.S. Government website, http://www.stopfakes.gov. Part of a Department of Commerce initiative, this website includes self-help "toolkits" giving innovators guidance on how to protect intellectual property in specific

countries such as China, Korea and Mexico. For questions regarding patent enforcement issues, applicants may call the U.S. Government hotline at 1-866-999-HALT (1-866-999-4258).

LICENSE FOR FOREIGN FILING UNDER

Title 35, United States Code, Section 184

Title 37, Code of Federal Regulations, 5.11 & 5.15

GRANTED

The applicant has been granted a license under 35 U.S.C. 184, if the phrase "IF REQUIRED, FOREIGN FILING LICENSE GRANTED" followed by a date appears on this form. Such licenses are issued in all applications where the conditions for issuance of a license have been met, regardless of whether or not a license may be required as set forth in 37 CFR 5.15. The scope and limitations of this license are set forth in 37 CFR 5.15(a) unless an earlier license has been issued under 37 CFR 5.15(b). The license is subject to revocation upon written notification. The date indicated is the effective date of the license, unless an earlier license of similar scope has been granted under 37 CFR 5.13 or 5.14.

This license is to be retained by the licensee and may be used at any time on or after the effective date thereof unless it is revoked. This license is automatically transferred to any related applications(s) filed under 37 CFR 1.53(d). This license is not retroactive.

The grant of a license does not in any way lessen the responsibility of a licensee for the security of the subject matter as imposed by any Government contract or the provisions of existing laws relating to espionage and the national security or the export of technical data. Licensees should apprise themselves of current regulations especially with respect to certain countries, of other agencies, particularly the Office of Defense Trade Controls, Department of State (with respect to Arms, Munitions and Implements of War (22 CFR 121-128)); the Bureau of Industry and Security, Department of Commerce (15 CFR parts 730-774); the Office of Foreign AssetsControl, Department of Treasury (31 CFR Parts 500+) and the Department of Energy.

NOT GRANTED

No license under 35 U.S.C. 184 has been granted at this time, if the phrase "IF REQUIRED, FOREIGN FILING LICENSE GRANTED" DOES NOT appear on this form. Applicant may still petition for a license under 37 CFR 5.12, if a license is desired before the expiration of 6 months from the filing date of the application. If 6 months has lapsed from the filing date of this application and the licensee has not received any indication of a secrecy order under 35 U.S.C. 181, the licensee may foreign file the application pursuant to 37 CFR 5.15(b).

SelectUSA

The United States represents the largest, most dynamic marketplace in the world and is an unparalleled location for business investment, innovation, and commercialization of new technologies. The U.S. offers tremendous resources and advantages for those who invest and manufacture goods here. Through SelectUSA, our nation works to promote and facilitate business investment. SelectUSA provides information assistance to the international investor community; serves as an ombudsman for existing and potential investors; advocates on behalf of U.S. cities, states, and regions competing for global investment; and counsels U.S. economic development organizations on investment attraction best practices. To learn more about why the United States is the best country in the world to develop

technology, manufacture products, deliver services, and grow your business, visit http://www.SelectUSA.gov or call +1-202-482-6800.

PATENT APPLICATION FEE DETERMINATION RECORD
Substitute for Form PTO-875

Application or Docket Number
16/686,328

APPLICATION AS FILED - PART I

FOR	(Column 1) NUMBER FILED	(Column 2) NUMBER EXTRA	SMALL ENTITY RATE($)	SMALL ENTITY FEE($)	OR	OTHER THAN SMALL ENTITY RATE($)	OTHER THAN SMALL ENTITY FEE($)
BASIC FEE (37 CFR 1.16(a), (b), or (c))	N/A	N/A	N/A			N/A	300
SEARCH FEE (37 CFR 1.16(k), (i), or (m))	N/A	N/A	N/A			N/A	660
EXAMINATION FEE (37 CFR 1.16(o), (p), or (q))	N/A	N/A	N/A			N/A	760
TOTAL CLAIMS (37 CFR 1.16(i))	25 minus 20 =	* 5			OR	x 100 =	500
INDEPENDENT CLAIMS (37 CFR 1.16(h))	4 minus 3 =	* 1				x 460 =	460
APPLICATION SIZE FEE (37 CFR 1.16(s))	If the specification and drawings exceed 100 sheets of paper, the application size fee due is $310 ($155 for small entity) for each additional 50 sheets or fraction thereof. See 35 U.S.C. 41(a)(1)(G) and 37 CFR 1.16(s).						0.00
MULTIPLE DEPENDENT CLAIM PRESENT (37 CFR 1.16(j))							0.00
* If the difference in column 1 is less than zero, enter "0" in column 2.			TOTAL			TOTAL	2680

APPLICATION AS AMENDED - PART II

		(Column 1) CLAIMS REMAINING AFTER AMENDMENT		(Column 2) HIGHEST NUMBER PREVIOUSLY PAID FOR	(Column 3) PRESENT EXTRA	SMALL ENTITY RATE($)	SMALL ENTITY ADDITIONAL FEE($)	OR	OTHER THAN SMALL ENTITY RATE($)	OTHER THAN SMALL ENTITY ADDITIONAL FEE($)
AMENDMENT A	Total (37 CFR 1.16(i))	*	Minus	**	=	x =		OR	x =	
AMENDMENT A	Independent (37 CFR 1.16(h))	*	Minus	***	=	x =		OR	x =	
AMENDMENT A	Application Size Fee (37 CFR 1.16(s))									
AMENDMENT A	FIRST PRESENTATION OF MULTIPLE DEPENDENT CLAIM (37 CFR 1.16(j))							OR		
						TOTAL ADD'L FEE		OR	TOTAL ADD'L FEE	

		(Column 1) CLAIMS REMAINING AFTER AMENDMENT		(Column 2) HIGHEST NUMBER PREVIOUSLY PAID FOR	(Column 3) PRESENT EXTRA	RATE($)	ADDITIONAL FEE($)		RATE($)	ADDITIONAL FEE($)
AMENDMENT B	Total (37 CFR 1.16(i))	*	Minus	**	=	x =		OR	x =	
AMENDMENT B	Independent (37 CFR 1.16(h))	*	Minus	***	=	x =		OR	x =	
AMENDMENT B	Application Size Fee (37 CFR 1.16(s))									
AMENDMENT B	FIRST PRESENTATION OF MULTIPLE DEPENDENT CLAIM (37 CFR 1.16(j))							OR		
						TOTAL ADD'L FEE		OR	TOTAL ADD'L FEE	

* If the entry in column 1 is less than the entry in column 2, write "0" in column 3.
** If the "Highest Number Previously Paid For" IN THIS SPACE is less than 20, enter "20".
*** If the "Highest Number Previously Paid For" IN THIS SPACE is less than 3, enter "3".
The "Highest Number Previously Paid For" (Total or Independent) is the highest found in the appropriate box in column 1.

Doc Code: TRACK1.REQ
Document Description: TrackOne Request

PTO/AIA/424 (04-14)

CERTIFICATION AND REQUEST FOR PRIORITIZED EXAMINATION UNDER 37 CFR 1.102(e) (Page 1 of 1)

First Named Inventor:	Michael J. Schuster	Nonprovisional Application Number (if known):	
Title of Invention:	TOILET VALVE		

APPLICANT HEREBY CERTIFIES THE FOLLOWING AND REQUESTS PRIORITIZED EXAMINATION FOR THE ABOVE-IDENTIFIED APPLICATION.

1. The processing fee set forth in 37 CFR 1.17(i)(1) and the prioritized examination fee set forth in 37 CFR 1.17(c) have been filed with the request. The publication fee requirement is met because that fee, set forth in 37 CFR 1.18(d), is currently $0. The basic filing fee, search fee, and examination fee are filed with the request or have been already been paid. I understand that any required excess claims fees or application size fee must be paid for the application.

2. I understand that the application may not contain, or be amended to contain, more than four independent claims, more than thirty total claims, or any multiple dependent claims, and that any request for an extension of time will cause an outstanding Track I request to be dismissed.

3. The applicable box is checked below:

I. ☑ Original Application (Track One) - Prioritized Examination under § 1.102(e)(1)

i. (a) The application is an original nonprovisional utility application filed under 35 U.S.C. 111(a). This certification and request is being filed with the utility application via EFS-Web.

---OR---

(b) The application is an original nonprovisional plant application filed under 35 U.S.C. 111(a). This certification and request is being filed with the plant application in paper.

ii. An executed inventor's oath or declaration under 37 CFR 1.63 or 37 CFR 1.64 for each inventor, **or** the application data sheet meeting the conditions specified in 37 CFR 1.53(f)(3)(i) is filed with the application.

II. ☐ Request for Continued Examination - Prioritized Examination under § 1.102(e)(2)

i. A request for continued examination has been filed with, or prior to, this form.
ii. If the application is a utility application, this certification and request is being filed via EFS-Web.
iii. The application is an original nonprovisional utility application filed under 35 U.S.C. 111(a), or is a national stage entry under 35 U.S.C. 371.
iv. This certification and request is being filed prior to the mailing of a first Office action responsive to the request for continued examination.
v. No prior request for continued examination has been granted prioritized examination status under 37 CFR 1.102(e)(2).

Signature /RDG/	Date 11-18-2019
Name (Print/Typed) Robert D. Gravois	Practitioner Registration Number 67,224

Note: *This form must be signed in accordance with 37 CFR 1.33. See 37 CFR 1.4(d) for signature requirements and certifications. Submit multiple forms if more than one signature is required.**

☐ *Total of _____ forms are submitted.

Privacy Act Statement

The **Privacy Act of 1974 (P.L. 93-579)** requires that you be given certain information in connection with your submission of the attached form related to a patent application or patent. Accordingly, pursuant to the requirements of the Act, please be advised that: (1) the general authority for the collection of this information is 35 U.S.C. 2(b)(2); (2) furnishing of the information solicited is voluntary; and (3) the principal purpose for which the information is used by the U.S. Patent and Trademark Office is to process and/or examine your submission related to a patent application or patent. If you do not furnish the requested information, the U.S. Patent and Trademark Office may not be able to process and/or examine your submission, which may result in termination of proceedings or abandonment of the application or expiration of the patent.

The information provided by you in this form will be subject to the following routine uses:

1. The information on this form will be treated confidentially to the extent allowed under the Freedom of Information Act (5 U.S.C. 552) and the Privacy Act (5 U.S.C 552a). Records from this system of records may be disclosed to the Department of Justice to determine whether disclosure of these records is required by the Freedom of Information Act.
2. A record from this system of records may be disclosed, as a routine use, in the course of presenting evidence to a court, magistrate, or administrative tribunal, including disclosures to opposing counsel in the course of settlement negotiations.
3. A record in this system of records may be disclosed, as a routine use, to a Member of Congress submitting a request involving an individual, to whom the record pertains, when the individual has requested assistance from the Member with respect to the subject matter of the record.
4. A record in this system of records may be disclosed, as a routine use, to a contractor of the Agency having need for the information in order to perform a contract. Recipients of information shall be required to comply with the requirements of the Privacy Act of 1974, as amended, pursuant to 5 U.S.C. 552a(m).
5. A record related to an International Application filed under the Patent Cooperation Treaty in this system of records may be disclosed, as a routine use, to the International Bureau of the World Intellectual Property Organization, pursuant to the Patent Cooperation Treaty.
6. A record in this system of records may be disclosed, as a routine use, to another federal agency for purposes of National Security review (35 U.S.C. 181) and for review pursuant to the Atomic Energy Act (42 U.S.C. 218(c)).
7. A record from this system of records may be disclosed, as a routine use, to the Administrator, General Services, or his/her designee, during an inspection of records conducted by GSA as part of that agency's responsibility to recommend improvements in records management practices and programs, under authority of 44 U.S.C. 2904 and 2906. Such disclosure shall be made in accordance with the GSA regulations governing inspection of records for this purpose, and any other relevant (*i.e.*, GSA or Commerce) directive. Such disclosure shall not be used to make determinations about individuals.
8. A record from this system of records may be disclosed, as a routine use, to the public after either publication of the application pursuant to 35 U.S.C. 122(b) or issuance of a patent pursuant to 35 U.S.C. 151. Further, a record may be disclosed, subject to the limitations of 37 CFR 1.14, as a routine use, to the public if the record was filed in an application which became abandoned or in which the proceedings were terminated and which application is referenced by either a published application, an application open to public inspection or an issued patent.
9. A record from this system of records may be disclosed, as a routine use, to a Federal, State, or local law enforcement agency, if the USPTO becomes aware of a violation or potential violation of law or regulation.

Under the Paperwork Reduction Act of 1995, no persons are required to respond to a collection of information unless it contains a valid OMB control number.

Application Data Sheet 37 CFR 1.76	Attorney Docket Number	171401-1037
	Application Number	
Title of Invention	TOILET VALVE	

The application data sheet is part of the provisional or nonprovisional application for which it is being submitted. The following form contains the bibliographic data arranged in a format specified by the United States Patent and Trademark Office as outlined in 37 CFR 1.76.
This document may be completed electronically and submitted to the Office in electronic format using the Electronic Filing System (EFS) or the document may be printed and included in a paper filed application.

Secrecy Order 37 CFR 5.2:

☐ Portions or all of the application associated with this Application Data Sheet may fall under a Secrecy Order pursuant to 37 CFR 5.2 (Paper filers only. Applications that fall under Secrecy Order may not be filed electronically.)

Inventor Information:

Inventor 1 Remove

Legal Name

Prefix	Given Name	Middle Name	Family Name	Suffix
	Michael	J.	Schuster	

Residence Information (Select One) ● US Residency Non US Residency Active US Military Service

City	Shorewood	State/Province	IL	Country of Residence i	US

Mailing Address of Inventor:

Address 1	501 Earl Road Shorewood		
Address 2	Suite A		
City	Shorewood	State/Province	IL
Postal Code	60404	Country i	US

Inventor 2 Remove

Legal Name

Prefix	Given Name	Middle Name	Family Name	Suffix
	Larry		Schneider	

Residence Information (Select One) ◉ US Residency Non US Residency Active US Military Service

City	Wadsworth	State/Province	IL	Country of Residence i	US

Mailing Address of Inventor:

Address 1	39155 N. Pine Grove Avenue		
Address 2			
City	Wadsworth	State/Province	IL
Postal Code	60083	Country i	US

All Inventors Must Be Listed - Additional Inventor Information blocks may be generated within this form by selecting the **Add** button. Add

Correspondence Information:

Enter either Customer Number or complete the Correspondence Information section below.
For further information see 37 CFR 1.33(a).

PTO/AIA/14 (02-18)
Approved for use through 11/30/2020. OMB 0651-0032
U.S. Patent and Trademark Office; U.S. DEPARTMENT OF COMMERCE
Under the Paperwork Reduction Act of 1995, no persons are required to respond to a collection of information unless it contains a valid OMB control number.

Application Data Sheet 37 CFR 1.76	Attorney Docket Number	171401-1037
	Application Number	
Title of Invention	TOILET VALVE	

☐ **An Address is being provided for the correspondence Information of this application.**			
Customer Number	24504		
Email Address	robert.gravois@thomashorstemeyer.com	Add Email	Remove Email

Application Information:

Title of the Invention	TOILET VALVE		
Attorney Docket Number	171401-1037	**Small Entity Status Claimed**	☐
Application Type	Nonprovisional		
Subject Matter	Utility		
Total Number of Drawing Sheets (if any)	9	**Suggested Figure for Publication (if any)**	

Filing By Reference:

Only complete this section when filing an application by reference under 35 U.S.C. 111(c) and 37 CFR 1.57(a). Do not complete this section if application papers including a specification and any drawings are being filed. Any domestic benefit or foreign priority information must be provided in the appropriate section(s) below (i.e., "Domestic Benefit/National Stage Information" and "Foreign Priority Information").

For the purposes of a filing date under 37 CFR 1.53(b), the description and any drawings of the present application are replaced by this reference to the previously filed application, subject to conditions and requirements of 37 CFR 1.57(a).

Application number of the previously filed application	Filing date (YYYY-MM-DD)	Intellectual Property Authority or Country

Publication Information:

☐ Request Early Publication (Fee required at time of Request 37 CFR 1.219)

☒ **Request Not to Publish.** I hereby request that the attached application not be published under 35 U.S.C. 122(b) and certify that the invention disclosed in the attached application **has not and will not** be the subject of an application filed in another country, or under a multilateral international agreement, that requires publication at eighteen months after filing.

Representative Information:

Representative information should be provided for all practitioners having a power of attorney in the application. Providing this information in the Application Data Sheet does not constitute a power of attorney in the application (see 37 CFR 1.32).
Either enter Customer Number or complete the Representative Name section below. If both sections are completed the customer Number will be used for the Representative Information during processing.

Please Select One:	● Customer Number	US Patent Practitioner	◯ Limited Recognition (37 CFR 11.9)
Customer Number	24504		

Under the Paperwork Reduction Act of 1995, no persons are required to respond to a collection of information unless it contains a valid OMB control number.

Application Data Sheet 37 CFR 1.76	Attorney Docket Number	171401-1037
	Application Number	
Title of Invention	TOILET VALVE	

Domestic Benefit/National Stage Information:

This section allows for the applicant to either claim benefit under 35 U.S.C. 119(e), 120, 121, 365(c), or 386(c) or indicate National Stage entry from a PCT application. Providing benefit claim information in the Application Data Sheet constitutes the specific reference required by 35 U.S.C. 119(e) or 120, and 37 CFR 1.78.
When referring to the current application, please leave the "Application Number" field blank.

Prior Application Status	Pending			Remove
Application Number	Continuity Type	Prior Application Number	Filing or 371(c) Date (YYYY-MM-DD)	
	Continuation of	14856901	2015-09-17	

Prior Application Status	Patented				Remove
Application Number	Continuity Type	Prior Application Number	Filing Date (YYYY-MM-DD)	Patent Number	Issue Date (YYYY-MM-DD)
14856901	Continuation of	14164424	2014-01-27	9139993	2015-09-22

Prior Application Status	Patented				Remove
Application Number	Continuity Type	Prior Application Number	Filing Date (YYYY-MM-DD)	Patent Number	Issue Date (YYYY-MM-DD)
14164424	Continuation of	13346355	2012-01-09	8650671	2014-02-18

Prior Application Status	Patented				Remove
Application Number	Continuity Type	Prior Application Number	Filing Date (YYYY-MM-DD)	Patent Number	Issue Date (YYYY-MM-DD)
13346355	Continuation of	12786904	2010-05-25	8104105	2012-01-31

Prior Application Status	Patented				Remove
Application Number	Continuity Type	Prior Application Number	Filing Date (YYYY-MM-DD)	Patent Number	Issue Date (YYYY-MM-DD)
12786904	Continuation of	10958797	2004-10-05	7743436	2010-06-29

Prior Application Status	Patented				Remove
Application Number	Continuity Type	Prior Application Number	Filing Date (YYYY-MM-DD)	Patent Number	Issue Date (YYYY-MM-DD)
10958797	Continuation in part of	10798606	2004-03-11	6823889	2004-11-30

Additional Domestic Benefit/National Stage Data may be generated within this form by selecting the **Add** button. Add

Foreign Priority Information:

Application Data Sheet 37 CFR 1.76	Attorney Docket Number	171401-1037
	Application Number	
Title of Invention	TOILET VALVE	

This section allows for the applicant to claim priority to a foreign application. Providing this information in the application data sheet constitutes the claim for priority as required by 35 U.S.C. 119(b) and 37 CFR 1.55. When priority is claimed to a foreign application that is eligible for retrieval under the priority document exchange program (PDX)[i] the information will be used by the Office to automatically attempt retrieval pursuant to 37 CFR 1.55(i)(1) and (2). Under the PDX program, applicant bears the ultimate responsibility for ensuring that a copy of the foreign application is received by the Office from the participating foreign intellectual property office, or a certified copy of the foreign priority application is filed, within the time period specified in 37 CFR 1.55(g)(1).

Remove

Application Number	Country[i]	Filing Date (YYYY-MM-DD)	Access Code[i] (if applicable)

Additional Foreign Priority Data may be generated within this form by selecting the **Add** button. Add

Statement under 37 CFR 1.55 or 1.78 for AIA (First Inventor to File) Transition Applications

☐ This application (1) claims priority to or the benefit of an application filed before March 16, 2013 and (2) also contains, or contained at any time, a claim to a claimed invention that has an effective filing date on or after March 16, 2013.
NOTE: By providing this statement under 37 CFR 1.55 or 1.78, this application, with a filing date on or after March 16, 2013, will be examined under the first inventor to file provisions of the AIA.

Application Data Sheet 37 CFR 1.76	Attorney Docket Number	171401-1037
	Application Number	
Title of Invention	TOILET VALVE	

Authorization or Opt-Out of Authorization to Permit Access:

When this Application Data Sheet is properly signed and filed with the application, applicant has provided written authority to permit a participating foreign intellectual property (IP) office access to the instant application-as-filed (see paragraph A in subsection 1 below) and the European Patent Office (EPO) access to any search results from the instant application (see paragraph B in subsection 1 below).

Should applicant choose not to provide an authorization identified in subsection 1 below, applicant **must opt-out** of the authorization by checking the corresponding box A or B or both in subsection 2 below.

NOTE: This section of the Application Data Sheet is **ONLY** reviewed and processed with the **INITIAL** filing of an application. After the initial filing of an application, an Application Data Sheet cannot be used to provide or rescind authorization for access by a foreign IP office(s). Instead, Form PTO/SB/39 or PTO/SB/69 must be used as appropriate.

1. Authorization to Permit Access by a Foreign Intellectual Property Office(s)

A. Priority Document Exchange (PDX) - Unless box A in subsection 2 (opt-out of authorization) is checked, the undersigned hereby **grants the USPTO authority** to provide the European Patent Office (EPO), the Japan Patent Office (JPO), the Korean Intellectual Property Office (KIPO), the State Intellectual Property Office of the People's Republic of China (SIPO), the World Intellectual Property Organization (WIPO), and any other foreign intellectual property office participating with the USPTO in a bilateral or multilateral priority document exchange agreement in which a foreign application claiming priority to the instant patent application is filed, access to: (1) the instant patent application-as-filed and its related bibliographic data, (2) any foreign or domestic application to which priority or benefit is claimed by the instant application and its related bibliographic data, and (3) the date of filing of this Authorization. See 37 CFR 1.14(h)(1).

B. Search Results from U.S. Application to EPO - Unless box B in subsection 2 (opt-out of authorization) is checked, the undersigned hereby **grants the USPTO authority** to provide the EPO access to the bibliographic data and search results from the instant patent application when a European patent application claiming priority to the instant patent application is filed. See 37 CFR 1.14(h)(2).

The applicant is reminded that the EPO's Rule 141(1) EPC (European Patent Convention) requires applicants to submit a copy of search results from the instant application without delay in a European patent application that claims priority to the instant application.

2. Opt-Out of Authorizations to Permit Access by a Foreign Intellectual Property Office(s)

☐ A. Applicant **DOES NOT** authorize the USPTO to permit a participating foreign IP office access to the instant application-as-filed. If this box is checked, the USPTO will not be providing a participating foreign IP office with any documents and information identified in subsection 1A above.

☐ B. Applicant **DOES NOT** authorize the USPTO to transmit to the EPO any search results from the instant patent application. If this box is checked, the USPTO will not be providing the EPO with search results from the instant application.

NOTE: Once the application has published or is otherwise publicly available, the USPTO may provide access to the application in accordance with 37 CFR 1.14.

PTO/AIA/14 (02-18)
Approved for use through 11/30/2020. OMB 0651-0032
U.S. Patent and Trademark Office; U.S. DEPARTMENT OF COMMERCE
Under the Paperwork Reduction Act of 1995, no persons are required to respond to a collection of information unless it contains a valid OMB control number.

Application Data Sheet 37 CFR 1.76	Attorney Docket Number	171401-1037
	Application Number	
Title of Invention	TOILET VALVE	

Applicant Information:

Providing assignment information in this section does not substitute for compliance with any requirement of part 3 of Title 37 of CFR to have an assignment recorded by the Office.

Applicant 1 Remove

If the applicant is the inventor (or the remaining joint inventor or inventors under 37 CFR 1.45), this section should not be completed. The information to be provided in this section is the name and address of the legal representative who is the applicant under 37 CFR 1.43; or the name and address of the assignee, person to whom the inventor is under an obligation to assign the invention, or person who otherwise shows sufficient proprietary interest in the matter who is the applicant under 37 CFR 1.46. If the applicant is an applicant under 37 CFR 1.46 (assignee, person to whom the inventor is obligated to assign, or person who otherwise shows sufficient proprietary interest) together with one or more joint inventors, then the joint inventor or inventors who are also the applicant should be identified in this section.

Clear

Assignee	Legal Representative under 35 U.S.C. 117	Joint Inventor
● Person to whom the inventor is obligated to assign.	Person who shows sufficient proprietary interest	

If applicant is the legal representative, indicate the authority to file the patent application, the inventor is:

Name of the Deceased or Legally Incapacitated Inventor:

If the Applicant is an Organization check here. ☒

Organization Name	Danco, Inc.		
Mailing Address Information For Applicant:			
Address 1	2727 Chemsearch Blvd.		
Address 2			
City	Irving	**State/Province**	TX
Country	US	Postal Code	75062
Phone Number		Fax Number	
Email Address			

Additional Applicant Data may be generated within this form by selecting the Add button. Add

Assignee Information including Non-Applicant Assignee Information:

Providing assignment information in this section does not substitute for compliance with any requirement of part 3 of Title 37 of CFR to have an assignment recorded by the Office.

Under the Paperwork Reduction Act of 1995, no persons are required to respond to a collection of information unless it contains a valid OMB control number.

Application Data Sheet 37 CFR 1.76	Attorney Docket Number	171401-1037
	Application Number	
Title of Invention	TOILET VALVE	

Assignee 1

Complete this section if assignee information, including non-applicant assignee information, is desired to be included on the patent application publication. An assignee-applicant identified in the "Applicant Information" section will appear on the patent application publication as an applicant. For an assignee-applicant, complete this section only if identification as an assignee is also desired on the patent application publication.

Remove

If the Assignee or Non-Applicant Assignee is an Organization check here. ☐

Prefix	**Given Name**	Middle Name	**Family Name**	Suffix

Mailing Address Information For Assignee including Non-Applicant Assignee:

Address 1			
Address 2			
City		**State/Province**	
Country i		Postal Code	
Phone Number		Fax Number	
Email Address			

Additional Assignee or Non-Applicant Assignee Data may be generated within this form by selecting the Add button. Add

Signature:

Remove

NOTE: This Application Data Sheet must be signed in accordance with 37 CFR 1.33(b). **However, if this Application Data Sheet is submitted with the INITIAL filing of the application and either box A or B is not checked in subsection 2 of the "Authorization or Opt-Out of Authorization to Permit Access" section, then this form must also be signed in accordance with 37 CFR 1.14(c).**

This Application Data Sheet **must** be signed by a patent practitioner if one or more of the applicants is a **juristic entity** (e.g., corporation or association). If the applicant is two or more joint inventors, this form must be signed by a patent practitioner, **all** joint inventors who are the applicant, or one or more joint inventor-applicants who have been given power of attorney (e.g., see USPTO Form PTO/AIA/81) on behalf of **all** joint inventor-applicants.

See 37 CFR 1.4(d) for the manner of making signatures and certifications.

Signature	/RDG/			Date (YYYY-MM-DD)	2019-11-15
First Name	Robert D.	Last Name	Gravois	Registration Number	67224

Additional Signature may be generated within this form by selecting the Add button. Add

Application Data Sheet 37 CFR 1.76	Attorney Docket Number	171401-1037
	Application Number	
Title of Invention	TOILET VALVE	

This collection of information is required by 37 CFR 1.76. The information is required to obtain or retain a benefit by the public which is to file (and by the USPTO to process) an application. Confidentiality is governed by 35 U.S.C. 122 and 37 CFR 1.14. This collection is estimated to take 23 minutes to complete, including gathering, preparing, and submitting the completed application data sheet form to the USPTO. Time will vary depending upon the individual case. Any comments on the amount of time you require to complete this form and/or suggestions for reducing this burden, should be sent to the Chief Information Officer, U.S. Patent and Trademark Office, U.S. Department of Commerce, P.O. Box 1450, Alexandria, VA 22313-1450. DO NOT SEND FEES OR COMPLETED FORMS TO THIS ADDRESS. **SEND TO: Commissioner for Patents, P.O. Box 1450, Alexandria, VA 22313-1450.**

Privacy Act Statement

The Privacy Act of 1974 (P.L. 93-579) requires that you be given certain information in connection with your submission of the attached form related to a patent application or patent. Accordingly, pursuant to the requirements of the Act, please be advised that: (1) the general authority for the collection of this information is 35 U.S.C. 2(b)(2); (2) furnishing of the information solicited is voluntary; and (3) the principal purpose for which the information is used by the U.S. Patent and Trademark Office is to process and/or examine your submission related to a patent application or patent. If you do not furnish the requested information, the U.S. Patent and Trademark Office may not be able to process and/or examine your submission, which may result in termination of proceedings or abandonment of the application or expiration of the patent.

The information provided by you in this form will be subject to the following routine uses:

1 The information on this form will be treated confidentially to the extent allowed under the Freedom of Information Act (5 U.S.C. 552) and the Privacy Act (5 U.S.C. 552a). Records from this system of records may be disclosed to the Department of Justice to determine whether the Freedom of Information Act requires disclosure of these records.

2. A record from this system of records may be disclosed, as a routine use, in the course of presenting evidence to a court, magistrate, or administrative tribunal, including disclosures to opposing counsel in the course of settlement negotiations.

3 A record in this system of records may be disclosed, as a routine use, to a Member of Congress submitting a request involving an individual, to whom the record pertains, when the individual has requested assistance from the Member with respect to the subject matter of the record.

4. A record in this system of records may be disclosed, as a routine use, to a contractor of the Agency having need for the information in order to perform a contract. Recipients of information shall be required to comply with the requirements of the Privacy Act of 1974, as amended, pursuant to 5 U.S.C. 552a(m).

5. A record related to an International Application filed under the Patent Cooperation Treaty in this system of records may be disclosed, as a routine use, to the International Bureau of the World Intellectual Property Organization, pursuant to the Patent CooperationTreaty.

6. A record in this system of records may be disclosed, as a routine use, to another federal agency for purposes of National Security review (35 U.S.C. 181) and for review pursuant to the Atomic Energy Act (42 U.S.C. 218(c)).

7. A record from this system of records may be disclosed, as a routine use, to the Administrator, General Services, or his/her designee, during an inspection of records conducted by GSA as part of that agency's responsibility to recommend improvements in records management practices and programs, under authority of 44 U.S.C. 2904 and 2906. Such disclosure shall be made in accordance with the GSA regulations governing inspection of records for this purpose, and any other relevant (i.e., GSA or Commerce) directive. Such disclosure shall not be used to make determinations about individuals.

8. A record from this system of records may be disclosed, as a routine use, to the public after either publication of the application pursuant to 35 U.S.C. 122(b) or issuance of a patent pursuant to 35 U.S.C. 151. Further, a record may be disclosed, subject to the limitations of 37 CFR 1.14, as a routine use, to the public if the record was filed in an application which became abandoned or in which the proceedings were terminated and which application is referenced by either a published application, an application open to public inspections or an issued patent.

9. A record from this system of records may be disclosed, as a routine use, to a Federal, State, or local law enforcement agency, if the USPTO becomes aware of a violation or potential violation of law or regulation.

ABSTRACT OF THE DISCLOSURE

According to various embodiments, a toilet system includes a toilet fill valve and a bowl fill valve that is configured to attach directly to the toilet fill valve. The toilet fill valve can include a body having an extended portion that forms a bowl fill outlet port, a water inlet configured to couple to a water source, and a tank water outlet configured to output water to a toilet tank. The bowl fill valve can include a bowl fill valve inlet port that is configured to mate directly to the bowl fill outlet port of the body of the toilet fill valve, a bowl fill valve outlet port, a protrusion configured to insert into a recess of the toilet fill valve and retain the bowl fill valve to the toilet fill valve, a slot that is configured to receive an extension of the toilet fill valve, and a water flow adjustment handle.

CLAIMS

What is claimed is:

1. A toilet system, comprising:

a toilet fill valve that comprises:

a body comprising an extended portion that forms a bowl fill outlet port;

a water inlet configured to couple to a water source; and

a tank water outlet configured to output water to a toilet tank;

a bowl fill valve configured to attach directly to the body of the toilet fill valve, the bowl fill valve comprising:

a bowl fill valve inlet port configured to mate directly to the bowl fill outlet port of the body of the toilet fill valve;

a bowl fill valve outlet port;

a protrusion configured to insert into a recess of the toilet fill valve and retain the bowl fill valve to the toilet fill valve; and

a water flow adjustment handle; and

a tube configured to attach directly to the bowl fill valve outlet port of the bowl fill valve.

2. The toilet system of claim 1, wherein the bowl fill valve further comprises a slot configured to receive an extension of the toilet fill valve.

3. The toilet system of claim 1, wherein the bowl fill outlet port comprises a male end, and wherein the bowl fill valve inlet port comprises a female receptacle for the male end of the bowl fill outlet port.

4. The toilet system of claim 1, wherein the protrusion of the bowl fill valve is an annular protrusion located on a bowl fill valve side wall of the bowl fill valve, wherein the recess of the toilet fill valve is an annular recess located on a bowl fill outlet port side wall of the bowl fill outlet port, wherein the slot of the bowl fill valve is located on the bowl fill valve side wall, and wherein the extension of the toilet fill valve is a rib on the bowl fill outlet port side wall.

5. The toilet system of claim 1, wherein the bowl fill outlet port extends radially from a longitudinal axis of the body of the toilet fill valve.

6. The toilet system of claim 5, wherein the toilet fill valve further comprises an actuation arm that extends radially from the longitudinal axis of the body of the toilet fill valve, and wherein the actuation arm is angularly offset relative to the bowl fill outlet port.

7. The toilet system of claim 1, wherein the toilet fill valve further comprises a float configured to move along at least a portion of the body of the toilet fill valve.

8. The toilet system of claim 7, wherein at least a portion of the body of the toilet fill valve extends through the float.

9. The toilet system of claim 1, wherein the bowl fill valve is configured to clamp directly onto the body of the toilet fill valve.

10. The toilet system of claim 1, wherein the bowl fill valve is configured to snap-fit directly onto the body of the toilet fill valve.

11. The toilet system of claim 1, wherein the water inlet of the toilet fill valve comprises a threaded coupling.

12. A bowl fill valve, comprising:

a bowl fill valve inlet port configured to mate directly to a bowl fill outlet port of a body of a toilet fill valve;

a bowl fill valve outlet port configured to attach directly to a tube that provides water from the bowl fill valve outlet port to an overflow tube;

a protrusion configured to insert into a recess of the toilet fill valve and retain the bowl fill valve to the toilet fill valve; and

a water flow adjustment handle being configured to adjust water flow from the bowl fill valve inlet port to the bowl fill valve outlet port.

13. The bowl fill valve of claim 12, further comprising a slot configured to receive an extension of the toilet fill valve.

14. The bowl fill valve of claim 12, wherein the bowl fill valve inlet port comprises a female receptacle for a male end of the bowl fill outlet port.

15. The bowl fill valve of claim 12, wherein the bowl fill valve is configured to clamp directly onto the body of the toilet fill valve.

16. The bowl fill valve of claim 12, wherein the bowl fill valve is configured to snap-fit directly onto the body of the toilet fill valve.

17. A method, comprising:

coupling a water inlet of a toilet fill valve to a water source;

attaching a bowl fill valve directly to a body of the toilet fill valve by at least:

mating a bowl fill valve inlet port of the bowl fill valve directly to a bowl fill outlet port that extends from the body of the toilet fill valve; and

inserting a protrusion of the bowl fill valve into a recess of the toilet fill valve; and

attaching a tube directly to a bowl fill valve outlet port of the bowl fill valve.

18. The method of claim 17, wherein attaching the bowl fill valve directly to the body of the toilet fill valve further comprises inserting an extension of the toilet fill valve into a slot of the bowl fill valve.

19. The method of claim 17, further comprising adjusting a flow of water out of the bowl fill valve.

20. The method of claim 17, wherein attaching the bowl fill valve directly to the body of the toilet fill valve further comprises clamping the bowl fill valve directly to the body of the toilet fill valve.

21. The method of claim 17, wherein attaching the bowl fill valve directly to the body of the toilet fill valve further comprises snap-fitting the bowl fill valve directly to the body of the toilet fill valve.

22. A bowl fill valve, comprising:

a bowl fill valve inlet port configured to mate directly to a bowl fill outlet port of a body of a toilet fill valve;

a bowl fill valve outlet port configured to attach directly to a tube that provides water from the bowl fill valve outlet port to an overflow tube; and

means for adjusting water flow out of the bowl fill valve outlet port.

23. The bowl fill valve of claim 22, further comprising a slot configured to receive an extension of the toilet fill valve.

24. The bowl fill valve of claim 22, further comprising a protrusion configured to insert into a recess of the toilet fill valve and retain the bowl fill valve to the toilet fill valve.

25. The bowl fill valve of claim 22, wherein the means for adjusting water flow out of the bowl fill valve outlet port comprises an adjustment handle.

TOILET VALVE

CROSS-REFERENCE TO RELATED APPLICATIONS

[0001] The present patent application is a continuation application of, and claims priority to, U.S. Patent Application No. 14/856,901 filed on September 17, 2015 and titled "TOILET VALVE," which is a continuation application of, and claims priority to U.S. Patent Application No. 14/164,424 filed on January 27, 2014 and titled "TOILET FILL VALVE," which is a continuation application of, and claims priority to U.S. Patent Application No. 13/346,355 filed on January 9, 2012 and titled "TOILET FILL VALVE WITH ADJUSTABLE BOWL FILL FLOW," which is a continuation application of, and claims priority to, U.S. Patent Application No. 12/786,904 filed on May 25, 2010 and titled "TOILET FILL VALVE WITH ADJUSTABLE BOWL FILL FLOW," which is a continuation application of, and claims priority to, U.S. Application No. 10/958,797 filed on October 5, 2004 and titled "TOILET FILL VALVE WITH ADJUSTABLE BOWL FILL FLOW," which is a continuation-in-part application of, and claims priority to, U.S. Patent Application No. 10/798,606 filed on March 11, 2004 and titled "TOILET FILL VALVE WITH ADJUSTABLE BOWL FILL FLOW."

BACKGROUND

[0002] A toilet fill valve in a toilet typically includes a water outlet that provides water for refilling a toilet bowl during a flush cycle. Unfortunately, the water flowing out of such conventional water outlets to fill a toilet bowl provide much more water than is necessary to fill the average toilet bowl. Consequently, much of the water that flows

into a toilet bowl during the average flush cycle is lost down the drain. This translates into a loss of millions of gallons of water each year.

BRIEF DESCRIPTION OF THE SEVERAL VIEWS OF THE DRAWINGS

[0003] The invention can be understood with reference to the following drawings. The components in the drawings are not necessarily to scale. Also, in the drawings, like reference numerals designate corresponding parts throughout the several views.

[0004] FIG. 1 is a drawing of a side view of a toilet fill valve according to an embodiment of the present invention;

[0005] FIG. 2 is a drawing of a top view of the toilet fill valve of FIG. 1;

[0006] FIG. 3 is a drawing of a cutaway view of a toilet tank within which the toilet fill valve of FIG. 1 is installed;

[0007] FIG. 4 is a drawing of a side view of a toilet fill valve according to an embodiment of the present invention;

[0008] FIGS. 5A and 5B are drawings that illustrate one example of a coupling of a bowl fill valve to the toilet fill valve of FIG. 4 according to an embodiment of the present invention;

[0009] FIGS. 6A, 6B, and 6C are drawings that illustrate another example of a coupling of a bowl fill valve to the toilet fill valve of FIG. 4 according to an embodiment of the present invention;

[0010] FIG. 7 is a drawing that illustrates still another example of a coupling of a bowl fill valve to the toilet fill valve of FIG. 4 according to an embodiment of the present invention;

[0011] FIGS. 8A and 8B are drawings that illustrate an example of a bowl fill valve that is coupled to the toilet fill valve of FIG. 4 according to an embodiment of the present invention; and

[0012] FIGS. 9A and 9B are drawings that illustrate another example of a bowl fill valve that is coupled to the toilet fill valve of FIG. 4 according to an embodiment of the present invention.

DETAILED DESCRIPTION

[0013] With reference to FIG. 1, shown is a toilet fill valve 100 according to an embodiment of the present invention. The toilet fill valve 100 includes a water inlet 103 at the bottom of the toilet fill valve 100 that is configured to be coupled to a water source outside of a toilet tank within which the toilet fill valve 100 is installed. The toilet fill valve 100 includes one or more water outlets 106 that are configured to supply water into a toilet tank within which the toilet fill valve 100 is installed. The toilet fill valve 100 may be, for example, a pilot style fill valve. However, it is understood that the toilet fill valve 100 may be any style of fill valve such as, for example, a ballcock valve, *etc*. The toilet fill valve 100 also includes a bowl fill valve 109 according to an embodiment of the present invention. The bowl fill valve 109 includes a bowl fill valve inlet 113 and a bowl fill valve outlet 116. In addition, the bowl fill valve 109 includes a handle 119 that facilitates a manual adjustment of the bowl fill valve 109.

[0014] The bowl fill valve 109 is integral with the toilet fill valve 100. In this respect, the term "integral" refers to the fact that the bowl fill valve 109 and the toilet fill valve 100 comprise a single structure. In this respect, the bowl fill valve 109 may be included within the body of the toilet fill valve 100 as a portion of the toilet fill valve 100 in a single piece construction. Specifically, the bowl fill valve 109 may be molded as a portion of the toilet fill valve 100 or it may be snapped or clamped into place, or it may be attached to the toilet fill valve 100 in some other manner, etc.

[0015] Within the toilet fill valve 100, the bowl fill valve inlet 113 is operatively coupled to the water inlet 103. In this respect, when the toilet fill valve 100 is open and water flows from the water inlet 103 to the water outlets 106 and into a toilet tank, an amount of water is also supplied to the bowl fill valve inlet 113 that flows through the bowl fill valve 109 and out the bowl fill valve outlet 116. By virtue of the manual setting of the handle 119 of the bowl fill valve 109, the flow of water through the bowl fill valve 109 is regulated. In this manner, the flow of water is regulated so that enough water flows out of the bowl fill valve 109 to fill a toilet bowl without wasting any water down a drain.

[0016] Thus, the bowl fill valve 109 is configured to supply an adjustable flow of water out of the bowl fill outlet 116 that is directed to a toilet bowl during a flush cycle of a toilet to fill the toilet bowl. The flow of water is adjusted so that just enough flows out of bowl fill valve 109 so as to fill the toilet bowl without wasting any water.

[0017] The toilet fill valve 100 includes a float 123 that is operatively coupled to an actuating arm (not shown) by a translating stem 126. The float 123 floats on the water within a toilet tank and, depending on the location of the float 123 along the toilet

fill valve 100, the toilet fill valve 100 is open or closed as can be appreciated by those with ordinary skill in the art. The bowl fill valve 109 and the actuating arm (not shown) are each located on the toilet fill valve 100 so as to prevent any interference between the bowl fill valve 109 and the translational stem 126 or the actuating arm as will be discussed.

[0018] According to an embodiment of the present invention, the bowl fill valve 109 may include a number of biased positions. In this respect, the movement of the handle 119 may cause the bowl fill valve 109 to move from one predefined biased position to other predefined biased positions. In this respect, various mechanisms such as tabs, snaps, or other position biasing structures may be employed. The biased positions of the bowl fill valve 109 help ensure that the bowl fill valve 109 remains in a given setting selected by a user by a manual manipulation of the handle 119 during the normal course of operation of the toilet fill valve 100. Thus, by virtue of the biased positions, the bowl fill valve 109 is prevented from moving out of a desired position set by a user over a long period of use due to vibration and other factors as can be appreciated by those with ordinary skill in the art.

[0019] The bowl fill valve 109 may be, for example, a ball valve, a gate valve, a globe valve, a plug valve, a diaphragm valve, a butterfly valve, a needle valve, a sliding gate, a quick turn valve, a knife valve or any other appropriate type of valve as can be appreciated by those with ordinary skill in the art.

[0020] To operate the toilet fill valve 100, the toilet fill valve 100 is first installed within a toilet tank. When a toilet is flushed and the tank is drained, the float 123 moves downward along the toilet fill valve 100 and, consequently, the toilet fill valve

100 opens to allow water to flow from the water inlet 103 and out the water outlets 106 into a toilet tank. At the same time, water flows into the bowl fill valve inlet 113 and out the bowl fill valve outlet 116 through the bowl fill valve 109. Based on the setting of the handle 119, the bowl fill valve 109 determines the precise flow rate of the water that flows out the bowl fill valve outlet 116. A tube is typically employed to direct the water flowing out the bowl fill valve outlet 116 to an overflow tube in the toilet tank. In this respect, the water flowing out the bowl fill valve outlet 116 refills the toilet bowl of the respective toilet.

[0021] Referring next to FIG. 2, shown is a top view of the toilet fill valve 100 according to an embodiment of the present invention. In this respect, the actuating arm 129 of the toilet fill valve 100 is seen with respect to the bowl fill valve 109. The actuating arm 129 is coupled to the float by way of the translational stem 126 (FIG. 1). In this respect, the actuating arm 129 extends in an orthogonal direction relative to a longitudinal axis 133 of the toilet fill valve 100. The longitudinal axis 133 is centered in the toilet fill valve 100 along the length of the toilet fill valve 100. Also, the bowl fill valve 109 extends in an orthogonal direction relative to the longitudinal axis 133 of the toilet fill valve 100. In order to prevent interference between the bowl fill valve 109 and the translational stem 126 or the actuating arm 129, the actuating arm 129 is angularly offset relative to the bowl fill valve 109 as shown. In this respect, the translational stem 126 is coupled to the free end of the actuating arm 129. By virtue of the angular offset between the bowl fill valve 109 and the actuating arm 129, the operation of the bowl fill valve 109 does not interfere with the operation of the toilet fill valve 100 itself

by virtue of the fact that the float 123 (FIG. 1) can move freely with the movement of the translational stem 126 in order for proper operation of the toilet fill valve 100.

[0022] With reference to FIG. 3, shown is the toilet fill valve 100 as installed within a toilet tank 143 according to an embodiment of the present invention. In this respect, the toilet fill valve 100 includes the water inlet 103 that is coupled to a water source outside of the toilet tank 143. The toilet fill valve 100 also includes one or more water outlets 106 that direct a flow of water into the toilet tank 143 during the operation of a flush cycle. The bowl fill valve 109 includes the bowl fill valve inlet (not shown) and the bowl fill valve outlet 116, where the bowl fill valve inlet is operatively coupled to the water inlet 103 as described above. Also, the bowl fill valve 109 is integrated with the body of the toilet fill valve 100 as described above.

[0023] A tube 146 is coupled to the bowl fill valve outlet 116 and is directed into the overflow tube 149 of the toilet tank 143. The tube 146 directs water that flows out of the bowl fill valve outlet 116 into the overflow tube 149 and refills the toilet bowl associated with the toilet tank 143 as can be appreciated by those with ordinary skill in the art. The bowl fill valve 109 is configured to supply the adjustable flow of water out the bowl fill valve outlet through the tube 146 and into the overflow tube 149 for filling the toilet bowl during the flush cycle of the toilet. In this respect, no pressure is seen within the tube 146. Specifically, the fact that the bowl fill valve 109 is integral with the toilet fill valve 100 prevents the creation of a pressure head in the tube 146 as would be the case if the bowl fill valve 109 were included in the middle of the tube 146. The fact that a pressure head is not created in any portion of the tube 146 prevents the tube 146 from working its way off of the bowl fill valve outlet 116 over time.

[0024] When installed, the bowl fill valve 109 is calibrated for the particular flush cycle of the toilet within which the toilet fill valve 100 is installed. To calibrate the bowl fill valve 109, a user first determines the water level in the toilet bowl when the toilet bowl is full of water. This gives the user a starting and an ending point for determining when the toilet bowl of the respective toilet is full. Next, the bowl fill valve handle 119 is adjusted so that the bowl fill valve 109 is placed in a predefined position that allows a predefined flow of water to refill the toilet bowl. In this manner, one adjusts the actual flow of water that refills the toilet bowl. Thereafter, the user flushes the toilet itself. Next, the user determines if the flow of water into the toilet bowl by virtue of the adjustments made to the bowl fill valve 109 is adequate to refill the toilet bowl during the flush cycle. This may be determined, by identifying whether the level of the water in the toilet bowl reaches the full level determined at the beginning of the bowl fill valve calibration above.

[0025] The flow of water from the bowl fill valve 109 should be set so as to ensure that the water level in the toilet bowl reaches the full level at about the same time that the flush cycle ends. In other words, the level of water in the toilet bowl should reach its highest level at the same time that the flush cycle ends. This prevents any water from being lost down the drain associated with the toilet.

[0026] If the amount of water that flows into the toilet bowl is inadequate to refill the toilet bowl during the flush cycle as described above, then one should repeat the steps of adjusting the bowl fill valve, flushing the toilet, and then once again determining if the flow of water into the toilet bowl is adequate to refill the toilet bowl during a flush cycle.

[0027] Ultimately, during use of the toilet that includes the toilet fill valve 100 and the toilet tank 143, a user flushes the toilet and a predetermined flow of water exits the bowl fill valve outlet 116 and is directed into the toilet bowl. After the toilet tank has drained during the flush cycle, a flapper closes in the toilet tank and the toilet tank refills. During the refilling of the tank, the water supplied by the bowl fill valve 109 fills the toilet bowl itself. The amount of water supplied by the bowl fill valve in the time it takes to refill the toilet tank should be approximately equal to the amount of water needed to fill the toilet bowl. By virtue of the fact that the bowl fill valve 109 is integrated within the toilet fill valve 100, a pressure head is prevented from being created due to any potential pinching of the tube 146 or other similar adjustment mechanism.

[0028] With reference to FIG. 4, shown is a toilet fill valve 200 according to another embodiment of the present invention. The toilet fill valve 200 includes the same water inlet 103 and the water outlets 106 as the toilet fill valve 100 (FIG. 1). The toilet fill valve 200 also includes the float 123 and the translational stem 126 as was described with reference to the toilet fill valve 100. In addition, the toilet fill valve 200 includes a bowl fill valve 203 that is integral with the toilet fill valve 200 as will be described. As stated above, the term “integral” refers to the fact that the bowl fill valve 203 and the toilet fill valve 200 comprise a single structure. In this embodiment, the bowl fill valve 203 is a separate component that is attached the body of the toilet fill valve 200, thereby forming the integral, single structure.

[0029] The toilet fill valve 200 also includes a bowl fill outlet port 206 that radially extends from a portion of a body 209 of the toilet fill valve 200. In this respect, the

bowl fill outlet port is operatively coupled to the water inlet 103. In particular, when the toilet fill valve 200 is in an "on" state, water that flows in the water inlet 103 flows out of both the water outlets 106 and the bowl fill outlet port 206. The water flowing out of the bowl fill outlet port 206 flows through the bowl fill valve 203 as will be described.

[0030] The bowl fill valve 203 includes a bowl fill valve inlet port 213 and a bowl fill valve outlet port 216. The bowl fill valve inlet port 213 is compatible with the bowl fill outlet port 206, where the bowl fill valve inlet port 213 is coupled to the bowl fill outlet port 206 when the bowl fill valve 203 is coupled or affixed to the toilet fill valve 200. The bowl fill valve inlet port 213 is compatible with the bowl fill outlet port 206 in the sense that both the bowl fill valve inlet port 213 and the bowl fill outlet port 206 comprise various structures that couple together when the bowl fill valve 203 is connected to the bowl fill outlet port 206 as will be described. In particular, various embodiments of the coupling between the bowl fill valve inlet port 213 and the bowl fill outlet port 206 are described herein.

[0031] The bowl fill valve 203 also includes a handle that may be adjusted by hand to adjust a flow of water through the bowl fill valve 203 during a flush operation of a toilet in which the toilet fill valve 200 is installed. Typically, the handle 219 is initially adjusted to a desired position when the toilet fill valve 200 is installed and generally remains in such position for the continued operation of the toilet fill valve 200. During the life cycle of the bowl fill valve 203, it may be possible that the bowl fill valve 203 is adjusted to take into account various changes in the operation of the toilet fill valve 200 such as, for example, changes in pressure or other operational changes.

[0032] The bowl fill valve 203 also includes a nipple 223. The nipple 223 is adapted to mate with a tube that extends from the bowl fill valve outlet port 216 to the overfill tube 149 (FIG. 3) in a manner similar to that as shown in FIG. 3 with respect to the tube 146 (FIG. 3) that extends from the nipple 116 (FIG. 3) to the overflow tube 149 (FIG. 3). The bowl fill valve 203 extends beyond the bowl fill outlet port 206 in a radial direction with respect to the portion of the body 209 of the toilet fill valve 200.

[0033] In some embodiments, the bowl fill outlet port 206 may comprise a female receptacle and, correspondingly, the bowl fill valve inlet port 213 may comprise a male end compatible with the female receptacle. Alternatively, the bowl fill valve inlet port 213 may comprise a female receptacle and the bowl fill outlet port 206 may comprise a male end compatible with such female receptacle.

[0034] The toilet fill valve 200 further includes an actuating arm (not shown) that extends in a radial direction that is orthogonal relative to a longitudinal axis of the toilet fill valve 200 in a manner similar as that described with reference to the toilet fill valve 100 (FIG. 1). The longitudinal axis is defined as an axis that runs from the water inlet 103 through the body 209 of the toilet fill valve 200 and out the top of the toilet fill valve 200. In one embodiment, the bowl fill valve 203 extends radially in an orthogonal direction relative to such longitudinal axis of the toilet fill valve 200. Also, in one embodiment, the actuating arm is angularly offset relative to the bowl fill valve 203 to prevent interference between the bowl fill valve 203 and the translational stem 126 that extends from the float 123 to a free end of the actuating arm. This allows the float 123 to move up and down and to engage the actuating arm during the normal operation of the toilet fill valve 200 during various flush cycles.

[0035] In addition, the bowl fill valve 203 may be constructed with a number of biased positions that help prevent the bowl fill valve 203 from moving out of adjustment over time when the force of pressure develops therein. Also, the biased positions aid a user in actual adjustment of the bowl fill valve 203 as can be appreciated.

[0036] The toilet fill valve 200 provides an advantage in that the body 209 of the toilet fill valve 200 may be constructed with the bowl fill outlet port 206 using a molding process that is much less complex than attempting to mold the entire bowl fill valve 203 within the structure of the body 209 as a single molded construction as was described with reference to one embodiment of the toilet fill valve 100. In this regard, the bowl fill valve 203 may be constructed as a separate component to the body 209 of the toilet fill valve 200 and assembled for distribution to end users.

[0037] Due to the fact that the bowl fill valve 203 is affixed to the toilet fill valve 200 through the coupling of the bowl fill outlet port 206 with the bowl fill valve inlet port 213, then a pressure head that develops within the bowl fill valve 203 due to the adjustment of the handle 219 during operation of the toilet fill valve 200 will not cause the bowl fill valve 203 to fall off of the toilet fill valve 200. Thus, when the toilet fill valve 200 is installed in a toilet tank 143, a user may adjust the opening of the bowl fill valve 203 by adjusting the handle 219 until a desired flow of water flows out of the bowl fill valve outlet port 216 into a tube and into the overflow tube 149 of a toilet. This flow of water is typically established to refill a toilet bowl of a toilet. In this regard, the flow of the water into the overflow tube 149 that refills the toilet bowl during a toilet flush operation may be regulated or adjusted so as to minimize or eliminate the

amount of water that is lost down the drain of a toilet due to over filling of the toilet bowl during a flush cycle of a toilet. In one embodiment, the bowl fill valve 203 is adjusted until the filling of the toilet bowl of the toilet coincides with the end of the flush cycle, thereby resulting in little or no loss of water.

[0038] Referring next to FIG. 5A, shown is a coupling 233 between one embodiment of the bowl fill outlet port 206, denoted herein as bowl fill outlet port 206a, and an embodiment of the bowl fill valve inlet port 213, denote herein as bowl fill valve inlet port 213a. The bowl fill valve inlet port 213a includes a slot 236 in a side wall 239. The bowl fill outlet port 206a comprises a rib (not shown) that extends from a side wall 243 that is inserted into the slot 236 when the bowl fill valve inlet port 213a is inserted into the bowl fill outlet port 206a. The mating of the slot 236 with the rib prevents the rotation of the bowl fill valve 203 with respect to the bowl fill outlet port 206a when the bowl fill valve inlet port 213a is inserted into the bowl fill outlet port 206a. Alternatively, there may be a number of slots 236 in the side wall 239 of the bowl fill valve inlet port 213a and a corresponding number of ribs extending from the side wall 243 of the bowl fill outlet port 206a.

[0039] The bowl fill valve inlet port 213a also includes an annular protrusion 246 that extends from the side wall 239 of the bowl fill valve inlet port 213a. Correspondingly, an annular groove (not shown) in the side wall 243 of the bowl fill outlet port 206a is provided that mates up with the annular protrusion 246 when the bowl fill valve inlet port 213a is inserted into the bowl fill outlet port 206a. In this respect, the annular protrusion 246 is snap fit into the annular groove (not shown), thereby affixing the bowl fill valve 203 to the bowl fill outlet port 206a.

[0040] Turning then to FIG. 5B, shown is a cutaway view of the coupling 233 between the bowl fill outlet port 206a and the bowl fill valve inlet port 213a according to an embodiment of the present invention. In this respect, the bowl fill outlet port 206a is depicted with two ribs 249 extending from the side wall 243 within the bowl fill outlet port 206a. Also, the bowl fill outlet port 206a includes the annular groove 253 into which the annular protrusion 246 snaps when the bowl fill valve inlet port 213a is inserted into the bowl fill outlet port 206a. In this respect, the mating of the annular protrusion 246 with the annular groove 253 fixes the bowl fill valve 203 to the bowl fill outlet port 206a. In this respect, the bowl fill valve 203 becomes an integral portion of the toilet fill valve 200.

[0041] Also, the fit between the annular protrusion 246 is a snug fit that forms a seal between the bowl fill outlet port 206a and the bowl fill valve inlet port 213a that prevents the leakage of water from the coupling 233 during a flush cycle. Alternatively, a snug fit may occur between other mating surfaces of the bowl fill outlet port 206a and the bowl fill valve inlet port 213a that prevents leakage of water from the coupling 233.

[0042] With reference to FIGS. 5A and 5B, even though the slots 236 are depicted as being formed within the side wall 239 of the bowl fill valve inlet port 213 and the ribs 249 extend from the side wall 243 within the bowl fill outlet port 206, it is possible that this arrangement may be reversed where the slots 236 are formed in the side wall 243 of the bowl fill outlet port 206a and the ribs 249 extend from the side wall 239 of the bowl fill valve inlet port 213a. In addition, the annular groove 253 may be created in the side wall 239 of the bowl fill valve inlet port 213 and the annular

projection 246 may extend inward from the side wall 243 within the bowl fill outlet port 206 in a reverse arrangement than that shown with reference to FIG. 5B.

[0043] Referring next to FIG. 6A, 6B, and 6C, shown is a coupling 263 between another embodiment of the bowl fill outlet port 206, denoted herein as bowl fill outlet port 206b, and another embodiment of the bowl fill valve inlet port 213, denoted herein as bowl fill valve inlet port 213b. The bowl fill valve inlet port 213b includes at least two locking ears 266 that mate with corresponding locking grooves 269 in the bowl fill outlet port 206b. In particular, the locking ears 266 extend from a side wall 271 of the bowl fill valve inlet port 213b. The locking grooves 269 are disposed in the side wall 273 of the bowl fill outlet port 206b. When the bowl fill valve 203 is inserted and twisted into the bowl fill outlet port 206b, each of the locking ears 266 is situated in a locking position of one of the locking grooves 269 as will be described. The coupling 263 further comprises a sealing ring 276 that may be, for example, a rubber O-ring or other type of sealing ring. The sealing ring 276 is compressed between an end of the bowl fill valve inlet port 213b and a seat within the bowl fill outlet port 206b as we described. While at least two locking ears 266 and corresponding locking grooves 269 are shown, it is possible that a design may be employed that comprises a single locking ear 266 and a single corresponding locking groove 269.

[0044] With reference to FIG. 6B, shown is a portion of the bowl fill valve inlet port 213b and the bowl fill outlet port 206b as the bowl fill valve inlet port 213b is inserted into the bowl fill outlet port 206b and is partially rotated such that the locking ears 266 are almost located in the locking positions 279. In this respect, each of the locking grooves 269 is a “J” formation. The J formation of the locking grooves 269

allows the locking ears 266 to slide down and around the partial loop of the J and seat in the locking position 279 such that the sealing ring 276 exerts a force against the end of the bowl fill valve inlet port 213b, thereby pushing the locking ears 266 into the locking positions 279 of the locking grooves 269 and holding the locking ears 266 in place. This ensures that the bowl fill valve 203 remains coupled to the bowl fill outlet port 206b.

[0045] With reference to FIG. 6C, shown is a cutaway view of the coupling 263 between the bowl fill outlet port 206b and the bowl fill valve inlet port 213b. In this respect, the bowl fill valve inlet port 213b is inserted into the bowl fill outlet port 206b in a manner such that the locking ears 266 mate with the locking grooves 269. When the locking ears 266 reach the bottom of the "J" of the locking grooves 269, then the bowl fill valve 203 is rotated so that the locking ears 266 may be seated in the locking positions 279.

[0046] The sealing ring 276 is seated against a portion of the bowl fill outlet port 206b. In one embodiment, this portion is a seating face 283 of the bowl fill outlet port 206b. Also, a portion of the bowl fill valve inlet port 213b is mated against the sealing ring 276. In one embodiment, this portion of the bowl fill valve inlet port 213b is an end face 286 such that the sealing ring is clamped between the seating face 283 and the end face 286 when the bowl fill valve inlet port 213b is inserted fully into the bowl fill outlet port 206b. The clamping or compression of the sealing ring 276 pushes the locking ears 266 into the locking position 279 of the locking grooves 269 once the bowl fill valve 203 is rotated accordingly. In this respect, the compressive force of the sealing ring 276 helps keep the bowl fill valve inlet port 213b of the bowl fill valve 203

mated with the bowl fill outlet port 206b. Also, the sealing ring 276 forms a seal between the bowl fill outlet port 206b and the bowl fill valve inlet port 213b that prevents leakage of water from the coupling 263 between the bowl fill outlet port 206b and the bowl fill valve inlet port 213b.

[0047] The locking positions 279 of the locking grooves and the locking ears 266 are located such that when the bowl fill valve 203 is rotated thereby positioning the locking ears 266 in the locking positions 279, the bowl fill valve 203 is substantially upright. In addition, the bowl fill outlet port 206b includes structural ribs 289 that provide greater structural stability for the bowl fill outlet port 206b and its attachment to the portion of the body 209 of the toilet fill valve 200 (FIG. 4). Alternatively, the bowl fill outlet port 206b may be attached without the structural ribs 289. In addition, it may be the case that the locking ears 266 extend inward from the side wall 273 of the bowl fill outlet port 206b and that the locking grooves 269 be situated within the side wall 271 of the bowl fill valve inlet port 213b.

[0048] Referring next to FIG. 7, shown is a cutaway view of a coupling 303 between a third embodiment of the bowl fill outlet port 206, denoted herein as bowl fill outlet port 206c and the bowl fill valve inlet port 213 denoted herein as bowl fill valve inlet port 213c. In this respect, the bowl fill outlet port 206c includes a first thread 306 disposed on a side wall 309 of the bowl fill outlet port 206c. A second thread 313 is disposed on a side wall of the bowl fill valve inlet port 213c that engages the first thread 306 disposed in the side wall of the bowl fill outlet port 206c. The bowl fill valve inlet port 213c is coupled to the bowl fill outlet port 206c by way of the first and second threads 306 and 313. Specifically, the bowl fill valve 203 may be screwed onto the

bowl fill outlet port 206c by virtue of the threads 306 and 313. When the bowl fill valve inlet port 213c is screwed into the bowl fill valve outlet port 206c, a sealing ring 316 is clamped between portions of the bowl fill valve inlet port 213c and the bowl fill outlet port 206c such as a seating face 319 of the bowl fill outlet port 206c and an end face 323 of the bowl fill valve inlet port 213c. In this respect, a seal is formed between the bowl fill outlet port 206c and the bowl fill valve inlet port 213c. Alternatively, the threads 306 and 313 may be specified so as to form an adequate seal between the bowl fill valve outlet port 206c and the bowl fill valve inlet port 213c for purposes of preventing leakage. As an additional alternative, the seating face 319 and the end face 323 or other portions of the bowl fill valve inlet port 213c and the bowl fill outlet port 206c may be compressed together to form a seal to prevent leakage. Alternatively, the bowl fill outlet port 206c and the bowl fill valve inlet port 213c may be designed to include mating surfaces that perform a friction seal as can be appreciated.

[0049] Referring next to FIG. 8a, shown is one embodiment of the bowl fill valve 203, denoted herein as bowl fill valve 203a according to an embodiment of the present invention. The bowl fill valve 203a includes a handle 219a and a valve body 333. The bowl fill valve 203a includes the bowl fill valve outlet port 216a and the bowl fill valve inlet port (not shown) the bowl fill valve outlet port 216a includes a nipple 223a.

[0050] Referring then to FIG. 8b, shown is a cutaway view of the bowl fill valve 203a according to an embodiment of the present invention. In this respect, the valve body 333 forms a cavity within which a valve 336 is inserted as shown. A line contact 339 is formed between surfaces of the valve body 333 and the valve 336 so as to both hold the valve 336 within the cavity that is formed by the valve body 333 and to form a

seal between the valve body 333 and the valve 336 to prevent water leakage. As seen, the valve 336 is integrated with the handle 219a in a single piece construction, although multiple piece construction may be employed.

[0051] With reference to FIGS. 9a and 9b, shown is a second embodiment of the bowl fill valve 203, denoted herein as bowl fill valve 203b according to an embodiment of the present invention. The bowl fill valve 203b includes a valve body 343 within which is inserted a valve 346. The bowl fill valve 203b further comprises the bowl fill valve outlet port 216b and a bowl fill valve inlet port (not shown). The bowl fill valve outlet port 216b includes a nipple 223b. The bowl fill valve 203b further includes a handle 219b for manual adjustment of the bowl fill valve 203b.

[0052] Referring next to FIG. 9b, shown is a cutaway view of the bowl fill valve 203b according to an embodiment of the present invention. As shown, the valve 346 is inserted into the valve body 343. A snap fit 349 affixes the valve 346 within the valve body 343. A seal is formed by virtue of an interference fit 353 between a surface of the valve 346 and an inner surface of the valve body 343. The bottom of the cavity within the valve 346 is closed by a cap 356 that may be spin welded onto the valve 346 after the valve is inserted into the valve body 343.

[0053] In addition, referring back to FIG. 4, other types of couplings may be employed between the bowl fill outlet port 206 the bowl fill valve inlet port 213. For example, the bowl fill outlet port 206 the bowl fill valve inlet port 213 may be configured to facilitate a compression fitting there between. Also, other snap fit and sealing configurations may be employed beyond those specifically described herein.

[0054] Although the invention is shown and described with respect to certain embodiments, it is obvious that equivalents and modifications will occur to others skilled in the art upon the reading and understanding of the specification. The present invention includes all such equivalents and modifications, and is limited only by the scope of the claims.

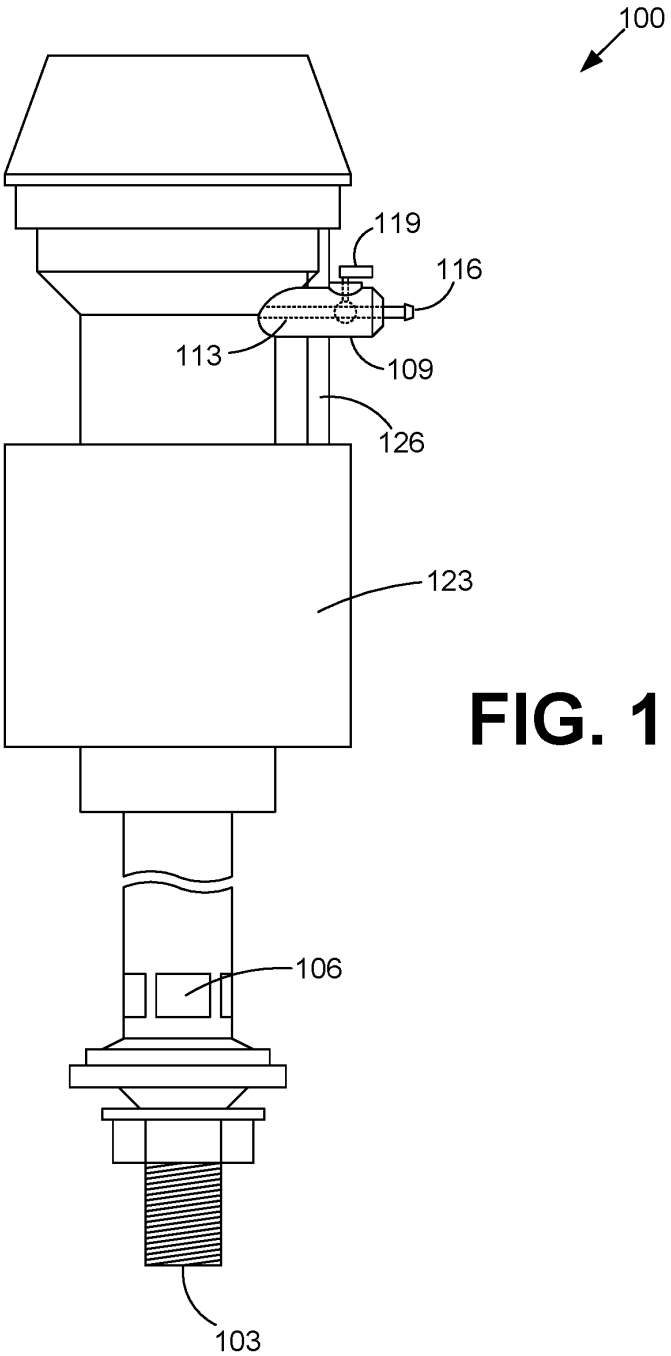

FIG. 1

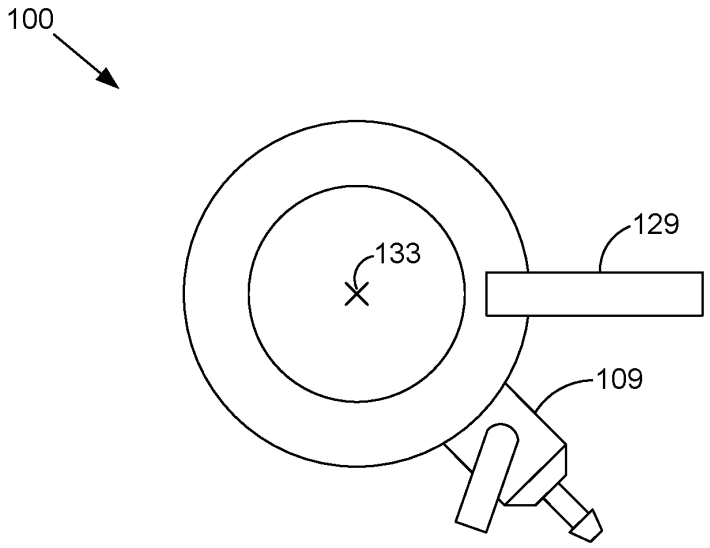

FIG. 2

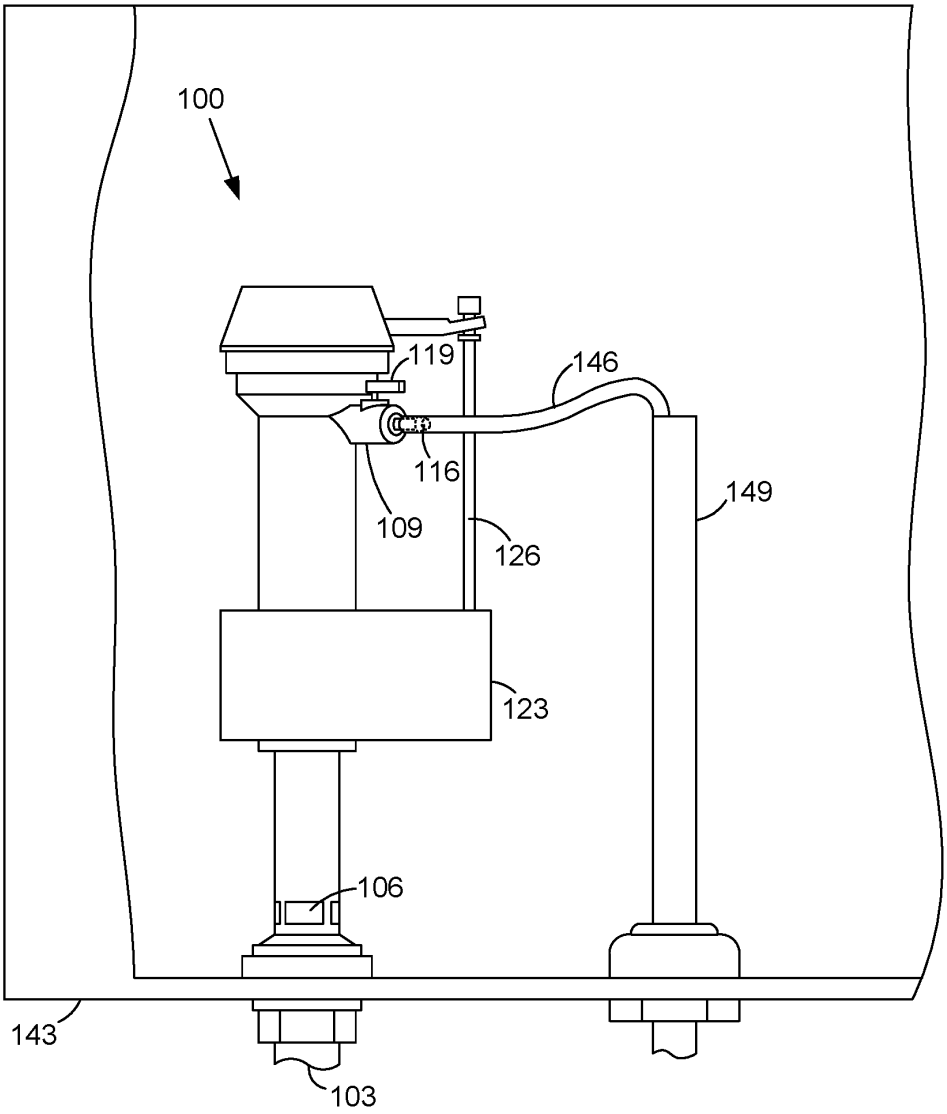

FIG. 3

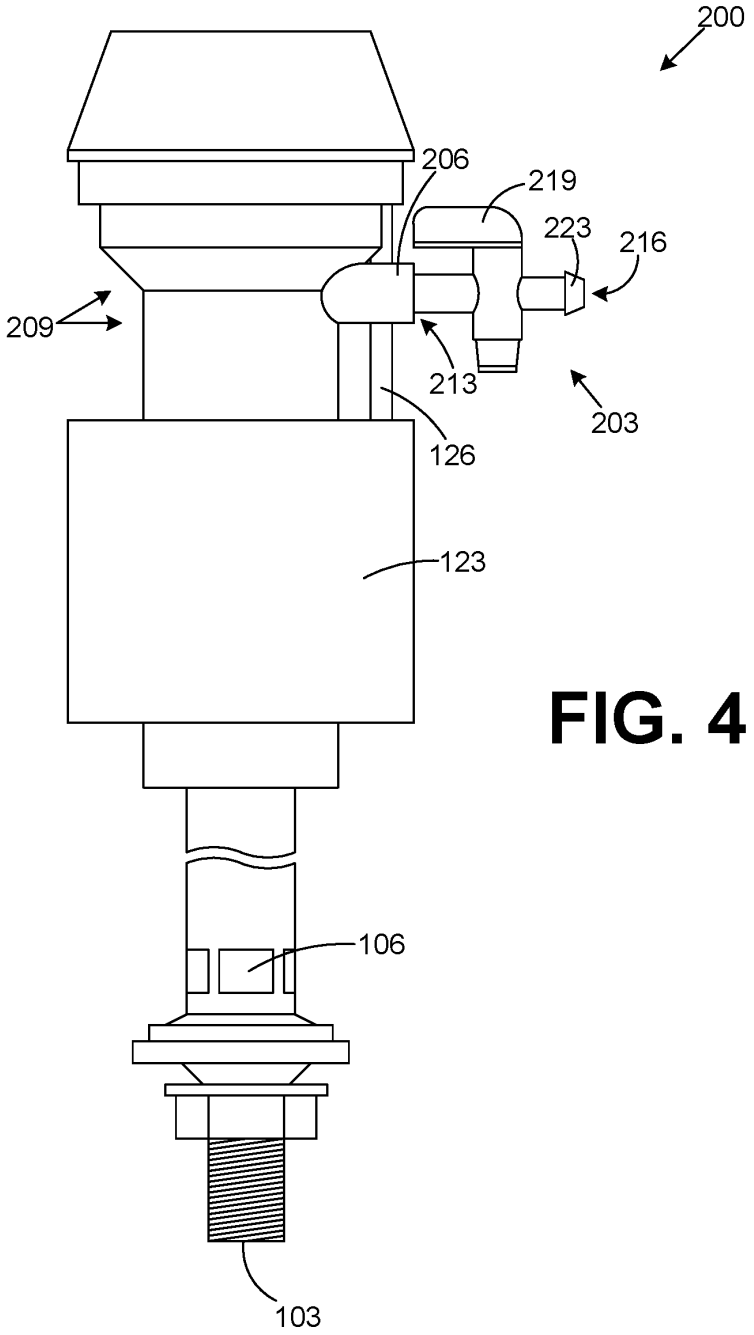

FIG. 4

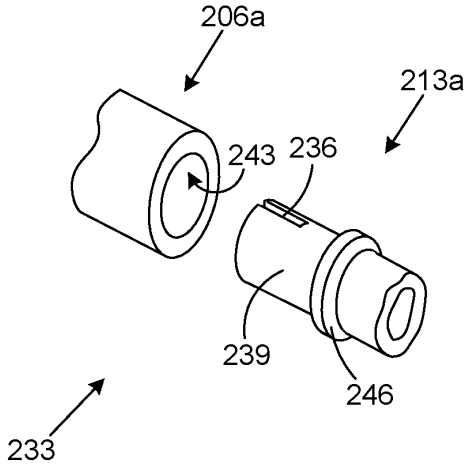
206a
213a
243
236
239
246
233

FIG. 5A

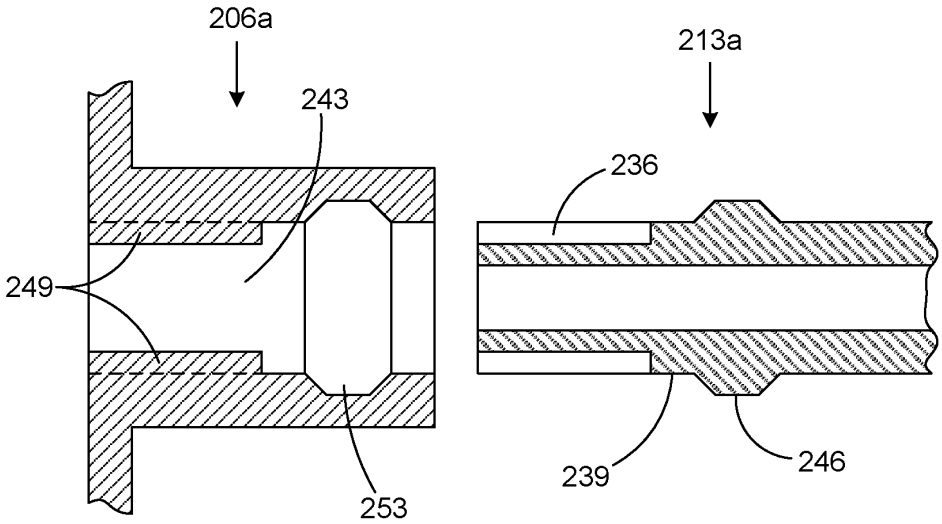
206a
213a
243
236
249
239
246
253

FIG. 5B

233

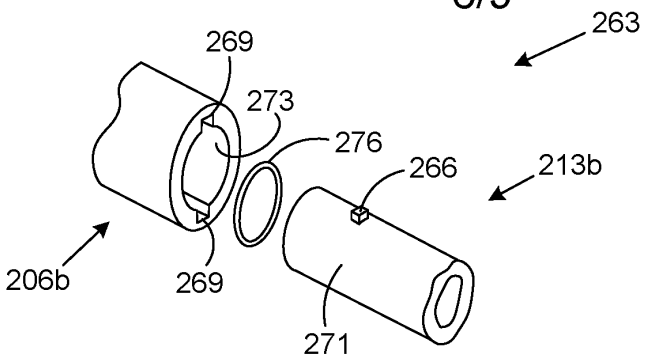

FIG. 6A

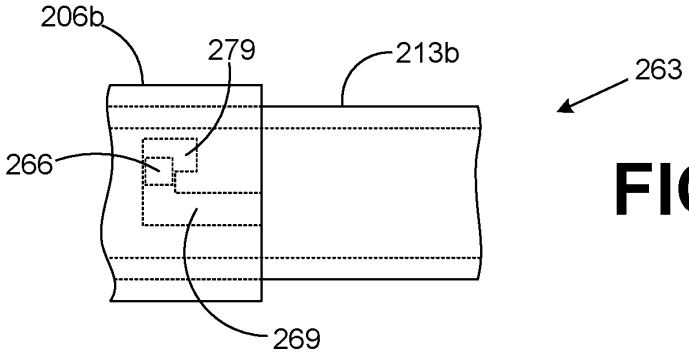

FIG. 6B

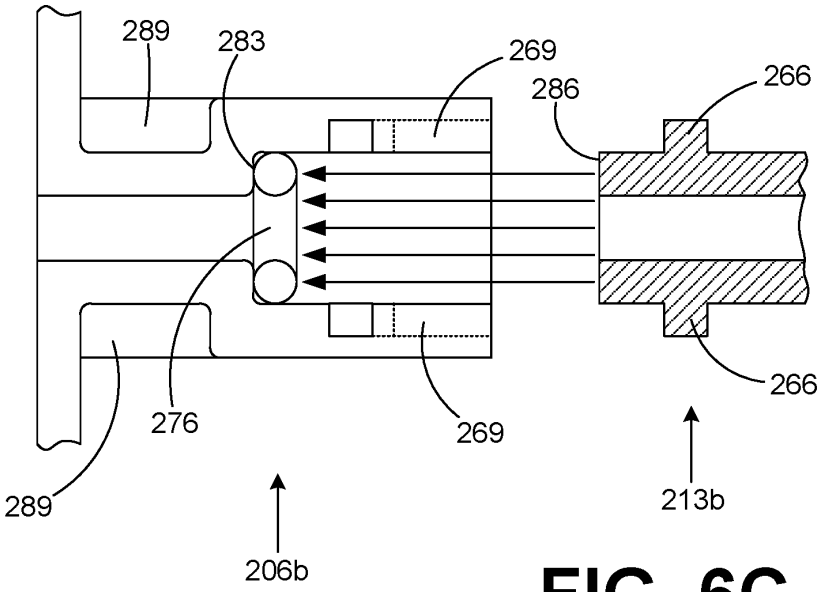

FIG. 6C

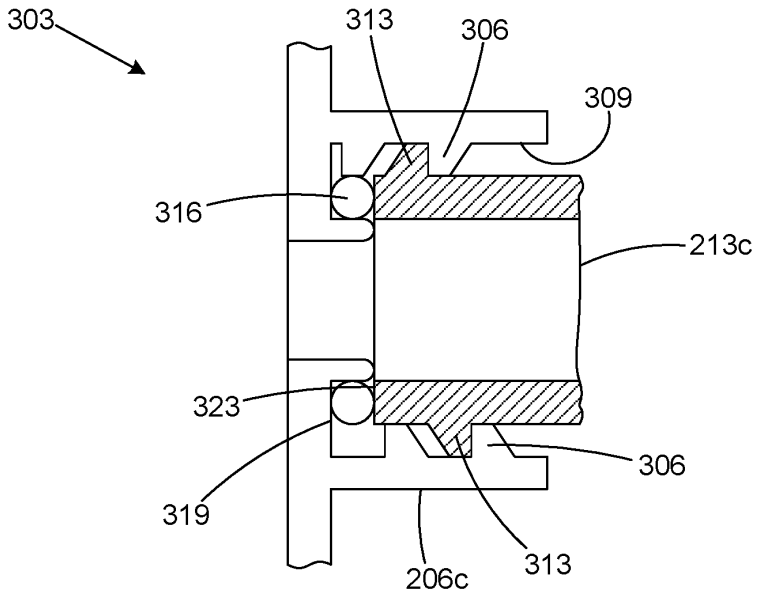

FIG. 7

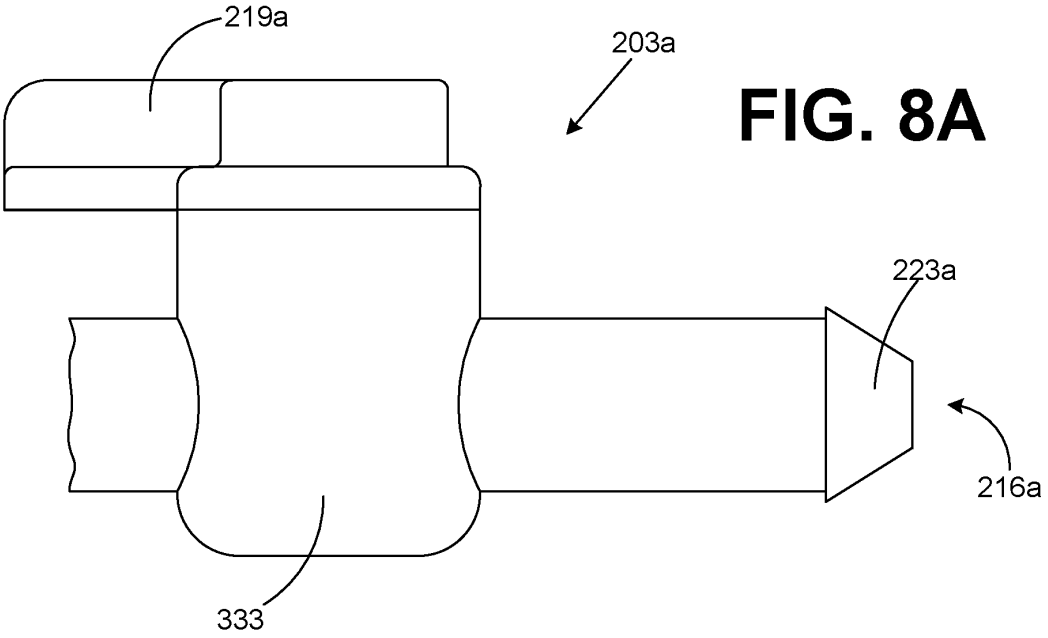

FIG. 8A

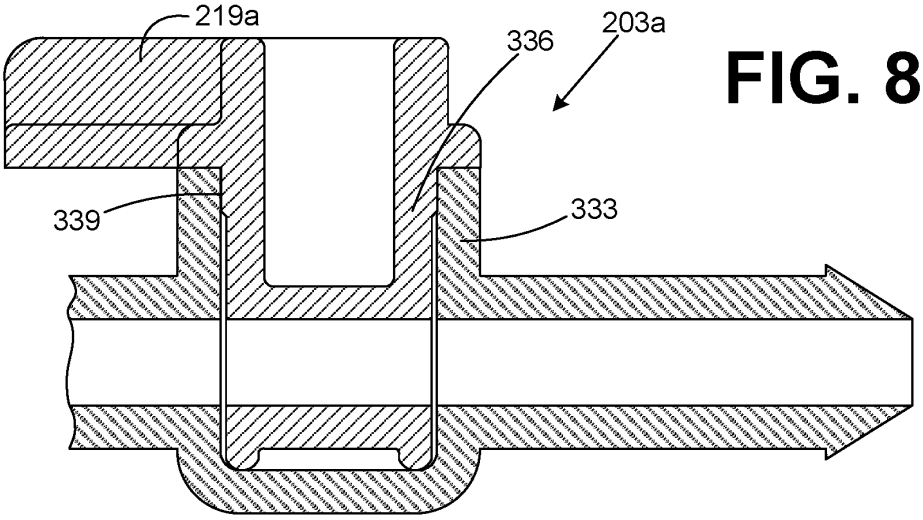

FIG. 8B

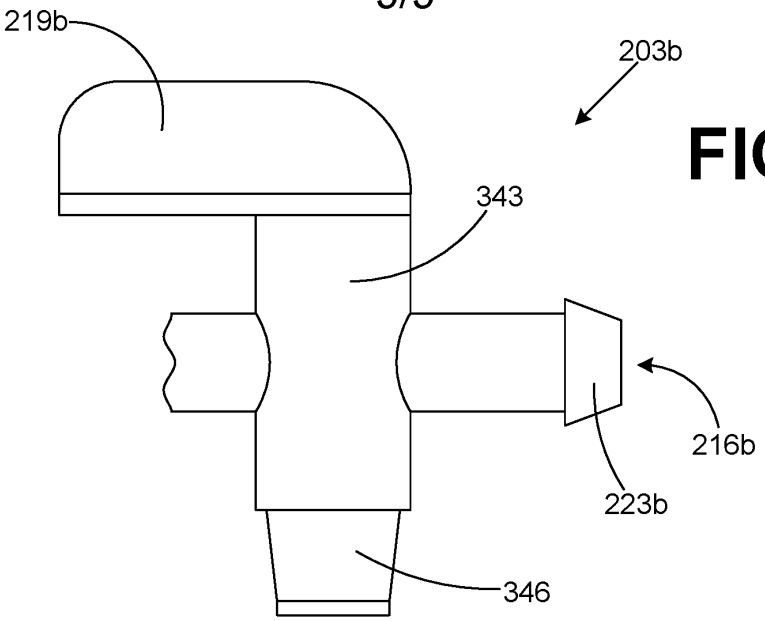

FIG. 9A

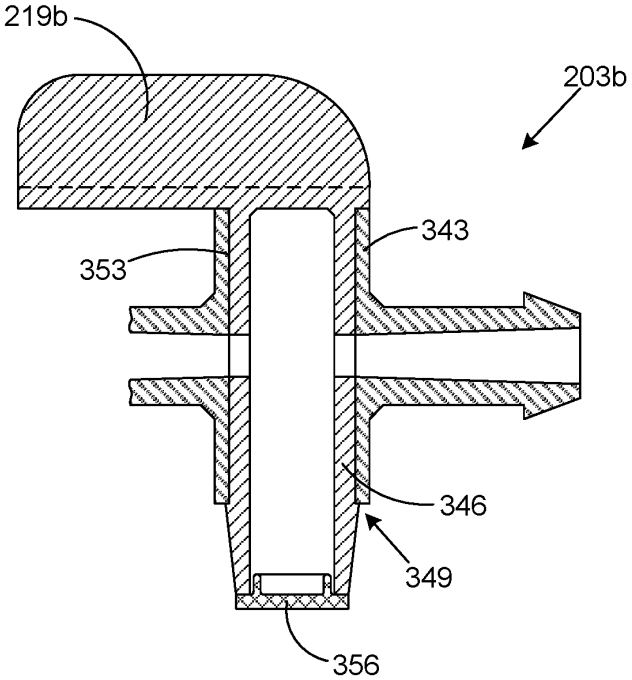

FIG. 9B

Doc Code: PA..
Document Description: Power of Attorney

PTO/AIA/82A (07-12)
Approved for use through 11/30/2014. OMB 0651-0035
U.S. Patent and Trademark Office; U.S. DEPARTMENT OF COMMERCE
Under the Paperwork Reduction Act of 1995, no persons are required to respond to a collection of information unless it displays a valid OMB control number.

TRANSMITTAL FOR POWER OF ATTORNEY TO ONE OR MORE REGISTERED PRACTITIONERS

NOTE: This form is to be submitted with the Power of Attorney by Applicant form (PTO/AIA/82B or equivalent) to identify the application to which the Power of Attorney is directed, in accordance with 37 CFR 1.5. If the Power of Attorney by Applicant form is not accompanied by this transmittal form or an equivalent, the Power of Attorney will not be recognized in the application.

Application Number	
Filing Date	Herewith
First Named Inventor	Michael J. Schuster
Title	Toilet Valve
Art Unit	
Examiner Name	TBD
Attorney Docket Number	171401-1037

SIGNATURE of Applicant or Patent Practitioner

Signature	/RDG/	Date	11/15/2019
Name	Robert D. Gravois	Telephone	770-933-9500
Registration Number	67,224		

NOTE: This form must be signed in accordance with 37 CFR 1.33. See 37 CFR 1.4(d) for signature requirements and certifications.

☐ *Total of _____ forms are submitted.

This collection of information is required by 37 CFR 1.31, 1.32 and 1.33. The information is required to obtain or retain a benefit by the public which is to file (and by the USPTO to process) an application. Confidentiality is governed by 35 U.S.C. 122 and 37 CFR 1.11 and 1.14. This collection is estimated to take 3 minutes to complete, including gathering, preparing, and submitting the completed application form to the USPTO. Time will vary depending upon the individual case. Any comments on the amount of time you require to complete this form and/or suggestions for reducing this burden, should be sent to the Chief Information Officer, U.S. Patent and Trademark Office, U.S. Department of Commerce, P.O. Box 1450, Alexandria, VA 22313-1450. DO NOT SEND FEES OR COMPLETED FORMS TO THIS ADDRESS. **SEND TO: Commissioner for Patents, P.O. Box 1450, Alexandria, VA 22313-1450.**

If you need assistance in completing the form, call 1-800-PTO-9199 and select option 2.

Doc Code: PA..
Document Description: Power of Attorney

PTO/AIA/82B(07-12)
Approved for use through 11/30/2014. OMB 0651-0035
U.S. Patent and Trademark Office; U.S. DEPARTMENT OF COMMERCE
Under the Paperwork Reduction Act of 1995, no persons are required to respond to a collection of information unless it displays a valid OMB control number.

POWER OF ATTORNEY BY APPLICANT

I hereby revoke all previous powers of attorney given in the application identified in the attached transmittal letter.

[x] I hereby appoint Practitioner(s) associated with the following Customer Number as my/our attorney(s) or agent(s), and to transact all business in the United States Patent and Trademark Office connected therewith for the application referenced in the attached transmittal letter (form PTO/AIA/82A or equivalent): 24504

OR

[ ] I hereby appoint Practitioner(s) named below as my/our attorney(s) or agent(s), and to transact all business in the United States Patent and Trademark Office connected therewith for the application referenced in the attached transmittal letter (form PTO/AIA/82A or equivalent):

Name	Registration Number	Name	Registration Number

Please recognize or change the correspondence address for the application identified in the attached transmittal letter to:

[x] The address associated with the above-mentioned Customer Number.
OR
[ ] The address associated with Customer Number:
OR

[ ] Firm or Individual Name					
Address					
City		State		Zip	
Country					
Telephone		Email			

I am the Applicant:

[ ] Inventor or Joint Inventor
[ ] Legal Representative of a Deceased or Legally Incapacitated Inventor
[x] Assignee or Person to Whom the Inventor is Under an Obligation to Assign
[ ] Person Who Otherwise Shows Sufficient Proprietary Interest (*e.g.*, a petition under 37 CFR 1.46(b)(2) was granted in the application or is concurrently being filed with this document)

SIGNATURE of Applicant for Patent

Signature		Date	April 9, 2014
Name	Russell L. Price	Telephone	972-438-0023
Title and Company	Vice President and Secretary, Danco Inc.		

NOTE: Signature - This form must be signed by the applicant in accordance with 37 CFR 1.33. See 37 CFR 1.4 for signature requirements and certifications. Submit multiple forms for more than one signature, see below *.

[ ] *Total of _____ forms are submitted.

This collection of information is required by 37 CFR 1.31, 1.32 and 1.33. The information is required to obtain or retain a benefit by the public which is to file (and by the USPTO to process) an application. Confidentiality is governed by 35 U.S.C. 122 and 37 CFR 1.11 and 1.14. This collection is estimated to take 3 minutes to complete, including gathering, preparing, and submitting the completed application form to the USPTO. Time will vary depending upon the individual case. Any comments on the amount of time you require to complete this form and/or suggestions for reducing this burden, should be sent to the Chief Information Officer, U.S. Patent and Trademark Office, U.S. Department of Commerce, P.O. Box 1450, Alexandria, VA 22313-1450. DO NOT SEND FEES OR COMPLETED FORMS TO THIS ADDRESS. SEND TO: **Commissioner for Patents, P.O. Box 1450, Alexandria, VA 22313-1450.**

If you need assistance in completing the form, call 1-800-PTO-9199 and select option 2.

Privacy Act Statement

The **Privacy Act of 1974 (P.L. 93-579)** requires that you be given certain information in connection with your submission of the attached form related to a patent application or patent. Accordingly, pursuant to the requirements of the Act, please be advised that: (1) the general authority for the collection of this information is 35 U.S.C. 2(b)(2); (2) furnishing of the information solicited is voluntary; and (3) the principal purpose for which the information is used by the U.S. Patent and Trademark Office is to process and/or examine your submission related to a patent application or patent. If you do not furnish the requested information, the U.S. Patent and Trademark Office may not be able to process and/or examine your submission, which may result in termination of proceedings or abandonment of the application or expiration of the patent.

The information provided by you in this form will be subject to the following routine uses:

1. The information on this form will be treated confidentially to the extent allowed under the Freedom of Information Act (5 U.S.C. 552) and the Privacy Act (5 U.S.C 552a). Records from this system of records may be disclosed to the Department of Justice to determine whether disclosure of these records is required by the Freedom of Information Act.
2. A record from this system of records may be disclosed, as a routine use, in the course of presenting evidence to a court, magistrate, or administrative tribunal, including disclosures to opposing counsel in the course of settlement negotiations.
3. A record in this system of records may be disclosed, as a routine use, to a Member of Congress submitting a request involving an individual, to whom the record pertains, when the individual has requested assistance from the Member with respect to the subject matter of the record.
4. A record in this system of records may be disclosed, as a routine use, to a contractor of the Agency having need for the information in order to perform a contract. Recipients of information shall be required to comply with the requirements of the Privacy Act of 1974, as amended, pursuant to 5 U.S.C. 552a(m).
5. A record related to an International Application filed under the Patent Cooperation Treaty in this system of records may be disclosed, as a routine use, to the International Bureau of the World Intellectual Property Organization, pursuant to the Patent Cooperation Treaty.
6. A record in this system of records may be disclosed, as a routine use, to another federal agency for purposes of National Security review (35 U.S.C. 181) and for review pursuant to the Atomic Energy Act (42 U.S.C. 218(c)).
7. A record from this system of records may be disclosed, as a routine use, to the Administrator, General Services, or his/her designee, during an inspection of records conducted by GSA as part of that agency's responsibility to recommend improvements in records management practices and programs, under authority of 44 U.S.C. 2904 and 2906. Such disclosure shall be made in accordance with the GSA regulations governing inspection of records for this purpose, and any other relevant (*i.e.*, GSA or Commerce) directive. Such disclosure shall not be used to make determinations about individuals.
8. A record from this system of records may be disclosed, as a routine use, to the public after either publication of the application pursuant to 35 U.S.C. 122(b) or issuance of a patent pursuant to 35 U.S.C. 151. Further, a record may be disclosed, subject to the limitations of 37 CFR 1.14, as a routine use, to the public if the record was filed in an application which became abandoned or in which the proceedings were terminated and which application is referenced by either a published application, an application open to public inspection or an issued patent.
9. A record from this system of records may be disclosed, as a routine use, to a Federal, State, or local law enforcement agency, if the USPTO becomes aware of a violation or potential violation of law or regulation.

DECLARATION FOR PATENT APPLICATION

Attorney Docket No: 171401-1034

Title of Invention: **TOILET FILL VALVE**

As the below named inventor, I hereby declare that:

This declaration is directed to:

☐ The attached application, or
☒ United States application or PCT International Application No. 14/164,424

The above-identified application was made or authorized to be made by me.

I believe that I am the original inventor or an original joint inventor of a claimed invention in the application.

I hereby state that I have reviewed and understand the contents of the above-identified specification, including the claims, as amended by any amendment referred to above.

I acknowledge the duty to disclose information known by me to be material to patentability as defined in 37 CFR 1.56, including for continuation-in-part applications, material information which became available between the filing date of the prior application and the national or PCT international filing date of the continuation-in-part application.

I hereby acknowledge that any willful false statement made in this declaration is punishable under 18 U.S.C. 1001 by fine or imprisonment of not more than five (5) years, or both.

Inventor's Signature: Michael J. Schuster Date: 8-1-14

Legal Name of Inventor: Michael J. Schuster

DECLARATION FOR PATENT APPLICATION

Attorney Docket No: 171401-1034

Title of Invention: **TOILET FILL VALVE**

As the below named inventor, I hereby declare that:

This declaration is directed to:

☐ The attached application, or
☒ United States application or PCT International Application No. 14/164,424.

The above-identified application was made or authorized to be made by me.

I believe that I am the original inventor or an original joint inventor of a claimed invention in the application.

I hereby state that I have reviewed and understand the contents of the above-identified specification, including the claims, as amended by any amendment referred to above.

I acknowledge the duty to disclose information known by me to be material to patentability as defined in 37 CFR 1.56, including for continuation-in-part applications, material information which became available between the filing date of the prior application and the national or PCT international filing date of the continuation-in-part application.

I hereby acknowledge that any willful false statement made in this declaration is punishable under 18 U.S.C. 1001 by fine or imprisonment of not more than five (5) years, or both.

Inventor's Signature: Larry Schneider Date: April 21, 2014

Legal Name of Inventor: Larry Schneider

PTO/SB/08a (02-18)
Approved for use through 11/30/2020. OMB 0651-0031
U.S. Patent and Trademark Office; U.S. DEPARTMENT OF COMMERCE
Under the Paperwork Reduction Act of 1995, no persons are required to respond to a collection of information unless it contains a valid OMB control number.

INFORMATION DISCLOSURE STATEMENT BY APPLICANT (Not for submission under 37 CFR 1.99)		
	Application Number	
	Filing Date	
	First Named Inventor	Michael J. Schuster
	Art Unit	
	Examiner Name	
	Attorney Docket Number	171401-1037

U.S.PATENTS						
Examiner Initial*	Cite No	Patent Number	Kind Code[1]	Issue Date	Name of Patentee or Applicant of cited Document	Pages,Columns,Lines where Relevant Passages or Relevant Figures Appear
	1	1113057	A	1914-10-06	Schumann	
	2	1787601	A	1931-01-06	Swanberg	
	3	2087503	A	1937-07-20	Clemmons	
	4	2465866	A	1949-03-29	Gaines	
	5	2512176	A	1950-06-20	Shaffer	
	6	2736037	A	1956-02-28	Hardie	
	7	2791235	A	1957-05-07	Smith	
	8	2799865	A	1957-07-23	Dufault	

INFORMATION DISCLOSURE STATEMENT BY APPLICANT (Not for submission under 37 CFR 1.99)	Application Number	
	Filing Date	
	First Named Inventor	Michael J. Schuster
	Art Unit	
	Examiner Name	
	Attorney Docket Number	171401-1037

	9	3040769	A	1962-06-26	Lamb	
	10	3086546	A	1963-04-23	Brown	
	11	3172128	A	1965-03-09	Ducey	
	12	3321972	A	1967-05-30	Goldtrap	
	13	3457947	A	1969-07-29	Fitzgerald	
	14	3744064	A	1973-07-10	Preston	
	15	3762395	A	1973-10-02	Taylor	
	16	3782686	A	1974-01-01	Cowie	
	17	3986216	A	1976-10-19	Davis et al.	
	18	3994628	A	1976-11-30	Kemper	
	19	4007498	A	1977-02-15	Pearson	

INFORMATION DISCLOSURE STATEMENT BY APPLICANT (Not for submission under 37 CFR 1.99)	Application Number	
	Filing Date	
	First Named Inventor	Michael J. Schuster
	Art Unit	
	Examiner Name	
	Attorney Docket Number	171401-1037

	20	4017916	A	1977-04-19	Pearson	
	21	4032822	A	1977-06-28	Un	
	22	4090532	A	1978-05-23	Story, Jr.	
	23	4134164	A	1979-01-16	Sanmartin Rial	
	24	4145775	A	1979-03-27	Butler	
	25	4351071	A	1982-09-28	Clar	
	26	4392260	A	1983-07-12	Bensen	
	27	4420845	A	1983-12-20	Antunez	
	28	4505231	A	1985-03-19	Syler	
	29	4527295	A	1985-07-09	Lacore	
	30	4700413	A	1987-10-20	Lopez	

INFORMATION DISCLOSURE STATEMENT BY APPLICANT (Not for submission under 37 CFR 1.99)	Application Number	
	Filing Date	
	First Named Inventor	Michael J. Schuster
	Art Unit	
	Examiner Name	
	Attorney Docket Number	171401-1037

	31	4707867	A	1987-11-24	Kawabe et al.	
	32	4764996	A	1988-08-23	Pino	
	33	4770388	A	1988-09-13	Carman	
	34	4793588	A	1988-12-27	Laverty, Jr.	
	35	4898124	A	1990-02-06	Granberg et al.	
	36	4918764	A	1990-04-24	Haselswerdt et al.	
	37	4980932	A	1991-01-01	Stemples	
	38	5007452	A	1991-04-16	Antunez	
	39	5036553	A	1991-08-06	Sanderson	
	40	5052060	A	1991-10-01	Makita et al.	
	41	5083323	A	1992-01-28	Cannan	

INFORMATION DISCLOSURE STATEMENT BY APPLICANT (Not for submission under 37 CFR 1.99)	Application Number	
	Filing Date	
	First Named Inventor	Michael J. Schuster
	Art Unit	
	Examiner Name	
	Attorney Docket Number	171401-1037

	42	5123628	A	1992-06-23	Yu	
	43	5134729	A	1992-08-04	Shaw	
	44	5228152	A	1993-07-20	Fraley	
	45	5232011	A	1993-08-03	Royalty	
	46	5245710	A	1993-09-21	Haselswerdt et al.	
	47	5327931	A	1994-07-12	Royalty et al.	
	48	5362026	A	1994-11-08	Kobayashi et al.	
	49	5432959	A	1995-07-18	Ellsworth et al.	
	50	5442820	A	1995-08-22	Becker	
	51	5469586	A	1995-11-28	Tsutsui et al.	
	52	5542448	A	1996-08-06	Campbell et al.	

INFORMATION DISCLOSURE STATEMENT BY APPLICANT (Not for submission under 37 CFR 1.99)		
	Application Number	
	Filing Date	
	First Named Inventor	Michael J. Schuster
	Art Unit	
	Examiner Name	
	Attorney Docket Number	171401-1037

	53	5624073	A	1997-04-29	Mueller et al.	
	54	5708991	A	1998-01-20	DeMarco	
	55	5715860	A	1998-02-10	Horad	
	56	5742951	A	1998-04-28	Wright et al.	
	57	5775366	A	1998-07-07	Ray et al.	
	58	5794279	A	1998-08-18	Schwartz	
	59	5862537	A	1999-01-26	Osmond	
	60	5926868	A	1999-07-27	Bjerke	
	61	6047725	A	2000-04-11	Gish et al.	
	62	6202227	B1	2001-03-20	Gurowitz	
	63	6209576	B1	2001-04-03	Davis	

INFORMATION DISCLOSURE STATEMENT BY APPLICANT (Not for submission under 37 CFR 1.99)	Application Number	
	Filing Date	
	First Named Inventor	Michael J. Schuster
	Art Unit	
	Examiner Name	
	Attorney Docket Number	171401-1037

	64	6219856	B1	2001-11-24	Alles	
	65	6263519	B1	2001-07-04	Parsons et al.	
	66	6295660	B1	2001-10-02	Schuster	
	67	6385788	B1	2002-05-14	Wasielewski	
	68	6409221	B1	2002-06-25	Robinson et al.	
	69	6560790	B2	2003-05-12	Saar et al.	
	70	6823889	B1	2004-11-30	Schuster	
	71	7743436	B1	2010-06-29	Schuster et al	
	72	8104105	B1	2010-06-29	Schuster et al.	
	73	8650671	B1	2014-02-18	Schuster et al.	
	74	9103105	B1	2015-08-11	Schuster et al.	

INFORMATION DISCLOSURE STATEMENT BY APPLICANT (Not for submission under 37 CFR 1.99)	Application Number	
	Filing Date	
	First Named Inventor	Michael J. Schuster
	Art Unit	
	Examiner Name	
	Attorney Docket Number	171401-1037

	75	9139993	B1	2015-09-22	Schuster et al.	
	76	136128	A	1873-02-25	Bralley	
	77	994746	A	1911-06-13	Haynes	
	78	996743	A	1911-07-04	Yancey	

If you wish to add additional U.S. Patent citation information please click the Add button.

U.S.PATENT APPLICATION PUBLICATIONS

Examiner Initial*	Cite No	Publication Number	Kind Code[1]	Publication Date	Name of Patentee or Applicant of cited Document	Pages,Columns,Lines where Relevant Passages or Relevant Figures Appear
	1	20020092090	A1	2002-07-18	Johnson	
	2	20020162166	A1	2002-11-07	Saar et al.	
	3	20040199989	A1	2004-10-14	Trolio	

If you wish to add additional U.S. Published Application citation information please click the Add button.

FOREIGN PATENT DOCUMENTS

Examiner Initial*	Cite No	Foreign Document Number[3]	Country Code[2]i	Kind Code[4]	Publication Date	Name of Patentee or Applicant of cited Document	Pages,Columns,Lines where Relevant Passages or Relevant Figures Appear	T[5]

EFS Web 2.1.18

INFORMATION DISCLOSURE STATEMENT BY APPLICANT (Not for submission under 37 CFR 1.99)	Application Number	
	Filing Date	
	First Named Inventor	Michael J. Schuster
	Art Unit	
	Examiner Name	
	Attorney Docket Number	171401-1037

	1							☐

If you wish to add additional Foreign Patent Document citation information please click the Add button

NON-PATENT LITERATURE DOCUMENTS

Examiner Initials*	Cite No	Include name of the author (in CAPITAL LETTERS), title of the article (when appropriate), title of the item (book, magazine, journal, serial, symposium, catalog, etc), date, pages(s), volume-issue number(s), publisher, city and/or country where published.	T[5]
	1	US Patent 6,823,889, File History (2004-2005) Great-Great-Great-Great-Grandparent Patent to this Application (copy not attached).	☐
	2	US Patent 7,743,436, File History (2004-2010) Great-Great-Great-Grandparent Patent to this Application (copy not attached).	☐
	3	US Patent 8,104,105, File History (2010-2012) Great-Great-Grandparent to this Application (copy not attached).	☐
	4	US Patent 8,650,671 File History (2012-2014) Great-Grandparent to this Application (copy not attached).	☐
	5	US Patent 9,139,993 File History (2014-2015) Grandparent to this Application (copy not attached).	☐
	6	US Patent 9,103,105 File History (2014-2015) Sibling of the Grandparent to this Application (copy not attached).	☐
	7	US Application 14/856,901 File History (2015-2019) Parent to this Application (copy not attached).	☐

If you wish to add additional non-patent literature document citation information please click the Add button

INFORMATION DISCLOSURE STATEMENT BY APPLICANT (Not for submission under 37 CFR 1.99)	Application Number	
	Filing Date	
	First Named Inventor	Michael J. Schuster
	Art Unit	
	Examiner Name	
	Attorney Docket Number	171401-1037

EXAMINER SIGNATURE			
Examiner Signature		Date Considered	

*EXAMINER: Initial if reference considered, whether or not citation is in conformance with MPEP 609. Draw line through a citation if not in conformance and not considered. Include copy of this form with next communication to applicant.

[1] See Kind Codes of USPTO Patent Documents at www.USPTO.GOV or MPEP 901.04. [2] Enter office that issued the document, by the two-letter code (WIPO Standard ST.3). [3] For Japanese patent documents, the indication of the year of the reign of the Emperor must precede the serial number of the patent document. [4] Kind of document by the appropriate symbols as indicated on the document under WIPO Standard ST.16 if possible. [5] Applicant is to place a check mark here if English language translation is attached.

INFORMATION DISCLOSURE STATEMENT BY APPLICANT (Not for submission under 37 CFR 1.99)		
	Application Number	
	Filing Date	
	First Named Inventor	Michael J. Schuster
	Art Unit	
	Examiner Name	
	Attorney Docket Number	171401-1037

CERTIFICATION STATEMENT

Please see 37 CFR 1.97 and 1.98 to make the appropriate selection(s):

☐ That each item of information contained in the information disclosure statement was first cited in any communication from a foreign patent office in a counterpart foreign application not more than three months prior to the filing of the information disclosure statement. See 37 CFR 1.97(e)(1).

OR

☐ That no item of information contained in the information disclosure statement was cited in a communication from a foreign patent office in a counterpart foreign application, and, to the knowledge of the person signing the certification after making reasonable inquiry, no item of information contained in the information disclosure statement was known to any individual designated in 37 CFR 1.56(c) more than three months prior to the filing of the information disclosure statement. See 37 CFR 1.97(e)(2).

☐ See attached certification statement.

☐ The fee set forth in 37 CFR 1.17 (p) has been submitted herewith.

☒ A certification statement is not submitted herewith.

SIGNATURE

A signature of the applicant or representative is required in accordance with CFR 1.33, 10.18. Please see CFR 1.4(d) for the form of the signature.

Signature	/RDG/	Date (YYYY-MM-DD)	
Name/Print	Robert D. Gravois	Registration Number	67224

This collection of information is required by 37 CFR 1.97 and 1.98. The information is required to obtain or retain a benefit by the public which is to file (and by the USPTO to process) an application. Confidentiality is governed by 35 U.S.C. 122 and 37 CFR 1.14. This collection is estimated to take 1 hour to complete, including gathering, preparing and submitting the completed application form to the USPTO. Time will vary depending upon the individual case. Any comments on the amount of time you require to complete this form and/or suggestions for reducing this burden, should be sent to the Chief Information Officer, U.S. Patent and Trademark Office, U.S. Department of Commerce, P.O. Box 1450, Alexandria, VA 22313-1450. DO NOT SEND FEES OR COMPLETED FORMS TO THIS ADDRESS. **SEND TO: Commissioner for Patents, P.O. Box 1450, Alexandria, VA 22313-1450.**

Privacy Act Statement

The Privacy Act of 1974 (P.L. 93-579) requires that you be given certain information in connection with your submission of the attached form related to a patent application or patent. Accordingly, pursuant to the requirements of the Act, please be advised that: (1) the general authority for the collection of this information is 35 U.S.C. 2(b)(2); (2) furnishing of the information solicited is voluntary; and (3) the principal purpose for which the information is used by the U.S. Patent and Trademark Office is to process and/or examine your submission related to a patent application or patent. If you do not furnish the requested information, the U.S. Patent and Trademark Office may not be able to process and/or examine your submission, which may result in termination of proceedings or abandonment of the application or expiration of the patent.

The information provided by you in this form will be subject to the following routine uses:

1. The information on this form will be treated confidentially to the extent allowed under the Freedom of Information Act (5 U.S.C. 552) and the Privacy Act (5 U.S.C. 552a). Records from this system of records may be disclosed to the Department of Justice to determine whether the Freedom of Information Act requires disclosure of these record s.

2. A record from this system of records may be disclosed, as a routine use, in the course of presenting evidence to a court, magistrate, or administrative tribunal, including disclosures to opposing counsel in the course of settlement negotiations.

3. A record in this system of records may be disclosed, as a routine use, to a Member of Congress submitting a request involving an individual, to whom the record pertains, when the individual has requested assistance from the Member with respect to the subject matter of the record.

4. A record in this system of records may be disclosed, as a routine use, to a contractor of the Agency having need for the information in order to perform a contract. Recipients of information shall be required to comply with the requirements of the Privacy Act of 1974, as amended, pursuant to 5 U.S.C. 552a(m).

5. A record related to an International Application filed under the Patent Cooperation Treaty in this system of records may be disclosed, as a routine use, to the International Bureau of the World Intellectual Property Organization, pursuant to the Patent Cooperation Treaty.

6. A record in this system of records may be disclosed, as a routine use, to another federal agency for purposes of National Security review (35 U.S.C. 181) and for review pursuant to the Atomic Energy Act (42 U.S.C. 218(c)).

7. A record from this system of records may be disclosed, as a routine use, to the Administrator, General Services, or his/her designee, during an inspection of records conducted by GSA as part of that agency's responsibility to recommend improvements in records management practices and programs, under authority of 44 U.S.C. 2904 and 2906. Such disclosure shall be made in accordance with the GSA regulations governing inspection of records for this purpose, and any other relevant (i.e., GSA or Commerce) directive. Such disclosure shall not be used to make determinations about individuals.

8. A record from this system of records may be disclosed, as a routine use, to the public after either publication of the application pursuant to 35 U.S.C. 122(b) or issuance of a patent pursuant to 35 U.S.C. 151. Further, a record may be disclosed, subject to the limitations of 37 CFR 1.14, as a routine use, to the public if the record was filed in an application which became abandoned or in which the proceedings were terminated and which application is referenced by either a published application, an application open to public inspections or an issued patent.

9. A record from this system of records may be disclosed, as a routine use, to a Federal, State, or local law enforcement agency, if the USPTO becomes aware of a violation or potential violation of law or regulation.

IN THE UNITED STATES PATENT AND TRADEMARK OFFICE

In Re Application of:

Schuster, et al.

Serial No.: **TBD**

Filed: Herewith

For: **Toilet Valve**

Confirmation No.: **TBD**

Group Art Unit: **TBD**

Examiner: **TBD**

Docket No. **171401-1037**

INFORMATION DISCLOSURE STATEMENT

Mail Stop Amendment
Commissioner for Patents
P.O. Box 1450
Alexandria, Virginia 22313-1450

Sir:

This information disclosure statement is filed in accordance with 37 C.F.R. §§ 1.56, 1.97, and 1.98. Listed on the accompanying form SB_08(a) are documents which may or may not be considered material to the examination of this application. These documents were made of record in a prior application filed September 17, 2015 and having serial no. 14/856,901, to which priority is claimed relative to the present application pursuant to 35 U.S.C. §120. Copies of these documents are not being provided pursuant to 37 C.F.R. § 1.98(d)(1) and (2), which provides:

> (d) A copy of any patent, publication, pending U.S. application or other information, as specified in paragraph (a) of this section, listed in an information disclosure statement is required to be provided, even if the patent, publication, pending U.S. application or other information was previously submitted to, or cited by, the Office in an earlier application, unless:
>
> (1) The application is properly identified in the information disclosure statement and is relied on for an earlier effective filing date under 35 U.S.C. §120; and

(2) The information disclosure statement submitted in the earlier application complies with a paragraphs (a) through (c) of this section.

The following rights are reserved by the Applicant(s): the right to establish the patentability of the claimed invention over any of the listed documents should they be applied as reference, the right to prove that some of these documents may not be prior art, and/or the right to prove that some of these documents may not be enabling for the teachings they purport to offer.

This statement should not be construed as a representation that an exhaustive search has been made, or that information more material to the examination of the present application does not exist. The Examiner is specifically requested not to rely solely on the materials submitted herewith. The Examiner is requested to conduct an independent and thorough review of the documents, and to form independent opinions as to their significance.

It is respectfully requested that the Examiner initial and return a copy of the enclosed PTO-1449 to indicate the documents have been considered.

Respectfully submitted,

THOMAS | HORSTEMEYER, LLP

By: /RDG/
Robert D. Gravois; Reg. No. 67,224

3200 Windy Hill Rd SE, Suite 1600E
Atlanta, Georgia 30339-5948
770-933-9500

Electronic Patent Application Fee Transmittal

Application Number:	
Filing Date:	
Title of Invention:	TOILET VALVE
First Named Inventor/Applicant Name:	Michael J. Schuster
Filer:	Robert D. Gravois/Lydia Gerstenberger
Attorney Docket Number:	171401-1037

Filed as Large Entity

Filing Fees for Track I Prioritized Examination - Nonprovisional Application under 35 USC 111(a)

Description	Fee Code	Quantity	Amount	Sub-Total in USD($)
Basic Filing:				
UTILITY APPLICATION FILING	1011	1	300	300
UTILITY SEARCH FEE	1111	1	660	660
UTILITY EXAMINATION FEE	1311	1	760	760
REQUEST FOR PRIORITIZED EXAMINATION	1817	1	4000	4000
Pages:				
Claims:				
CLAIMS IN EXCESS OF 20	1202	5	100	500
INDEPENDENT CLAIMS IN EXCESS OF 3	1201	1	460	460

Description	Fee Code	Quantity	Amount	Sub-Total in USD($)
Miscellaneous-Filing:				
PUBL. FEE- EARLY, VOLUNTARY, OR NORMAL	1504	1	0	0
PROCESSING FEE, EXCEPT PROV. APPLS.	1830	1	140	140
Petition:				
Patent-Appeals-and-Interference:				
Post-Allowance-and-Post-Issuance:				
Extension-of-Time:				
Miscellaneous:				
			Total in USD ($)	**6820**

Electronic Acknowledgement Receipt

EFS ID:	37774442
Application Number:	16686328
International Application Number:	
Confirmation Number:	6118
Title of Invention:	TOILET VALVE
First Named Inventor/Applicant Name:	Michael J. Schuster
Customer Number:	24504
Filer:	Robert D. Gravois/Lydia Gerstenberger
Filer Authorized By:	Robert D. Gravois
Attorney Docket Number:	171401-1037
Receipt Date:	18-NOV-2019
Filing Date:	
Time Stamp:	10:45:29
Application Type:	Utility under 35 USC 111(a)

Payment information:

Submitted with Payment	yes
Payment Type	CARD
Payment was successfully received in RAM	$6820
RAM confirmation Number	E2019AHA47143901
Deposit Account	200778
Authorized User	Lydia Gerstenberger

The Director of the USPTO is hereby authorized to charge indicated fees and credit any overpayment as follows:

37 CFR 1.21 (Miscellaneous fees and charges)

File Listing:

Document Number	Document Description	File Name	File Size(Bytes)/ Message Digest	Multi Part /.zip	Pages (if appl.)
1	TrackOne Request	AIA_424_Certification_and_Request_for_Prioritized_Examination.pdf	113762 67b89ba94af839f34f06fbb5421eccf253ff7a33	no	2
Warnings:					
Information:					
2	Application Data Sheet	171401-1037_ADS.pdf	1823001 ac0cee2bed55ffdcd44b786e8beb8a805fdef650	no	9
Warnings:					
Information:					
3		171401-1037_Patent_Application_CON.pdf	163513 ec0eff1eb94be212ea47acf26517b449438e7002	yes	27

Multipart Description/PDF files in .zip description

Document Description	Start	End
Abstract	27	27
Claims	21	26
Specification	1	20

Warnings:					
Information:					
4	Drawings-only black and white line drawings	171401-1037_Drawings.pdf	85980 43c8cca3a0d032be6da64dd52caf3895ecc7e9b9	no	9
Warnings:					
Information:					
5	Preliminary Amendment	Preliminary_Remarks--Hakim_Recapture_Statement.pdf	86076 3b6bcca16d380bcd6f5c89d0ef05200174914c6f	no	2

Warnings:					
Information:					
6	Power of Attorney	POA_-_executed.pdf	250451 72cf2ea65114aa8946a4522d5016e1cca194d54f	no	3
Warnings:					
Information:					
7	Oath or Declaration filed	Executed_Declaration_-_Schuster_171401-1034.pdf	246193 bc5ff9c12e0a29ec6480d4f8f07b315f388e310c	no	1
Warnings:					
Information:					
8	Oath or Declaration filed	Declaration_-_Executed_by_Larry_Schneider.pdf	27947 217e6de162c9f55813dbd4be5c902f5c50c7c1bc	no	1
Warnings:					
Information:					
9	Information Disclosure Statement (IDS) Form (SB08)	171401-1037_IDS_with_Application_USPTO_2.pdf	2229471 a107bd54623b280ffb0adf04d618ad28cff53698	no	12
Warnings:					
Information:					
This is not an USPTO supplied IDS fillable form					
10	Miscellaneous Incoming Letter	IDS_transmittal_letter_-_CON.pdf	93175 69374587d605f42b51e09f2d06138efb453cc8c5	no	2
Warnings:					
Information:					
11	Fee Worksheet (SB06)	fee-info.pdf	43249 c73d38868f35e5bc48187a440365f8f43f6dffaf	no	2
Warnings:					
Information:					
			Total Files Size (in bytes):	5162818	

This Acknowledgement Receipt evidences receipt on the noted date by the USPTO of the indicated documents, characterized by the applicant, and including page counts, where applicable. It serves as evidence of receipt similar to a Post Card, as described in MPEP 503.

New Applications Under 35 U.S.C. 111
If a new application is being filed and the application includes the necessary components for a filing date (see 37 CFR 1.53(b)-(d) and MPEP 506), a Filing Receipt (37 CFR 1.54) will be issued in due course and the date shown on this Acknowledgement Receipt will establish the filing date of the application.
National Stage of an International Application under 35 U.S.C. 371
If a timely submission to enter the national stage of an international application is compliant with the conditions of 35 U.S.C. 371 and other applicable requirements a Form PCT/DO/EO/903 indicating acceptance of the application as a national stage submission under 35 U.S.C. 371 will be issued in addition to the Filing Receipt, in due course.
New International Application Filed with the USPTO as a Receiving Office
If a new international application is being filed and the international application includes the necessary components for an international filing date (see PCT Article 11 and MPEP 1810), a Notification of the International Application Number and of the International Filing Date (Form PCT/RO/105) will be issued in due course, subject to prescriptions concerning national security, and the date shown on this Acknowledgement Receipt will establish the international filing date of the application.

IN THE UNITED STATES PATENT AND TRADEMARK OFFICE

In re the application of:	Confirmation: TBD
Michael Schuster, *et al.*	Art Unit: TBD
Application Number: TBD	Examiner: TBD
Filing Date: Herewith	Docket No.: 171401-1037
Title: **TOILET VALVE**	

PRELIMINARY REMARKS

Commissioner for Patents
P.O. Box 1450
Alexandria, VA 22313-1450

Sir:

With respect to the above-identified patent application, the following remarks are submitted.

REMARKS

The following preliminary remarks are respectfully submitted to be considered before examination of the present patent application.

At least one or more of the claims of the present application are different from and possibly, at least in some aspects, broader in scope than the claims pursued in the patent applications to which the present application claims priority (hereinafter referred to as "the Parent Applications"). In view of the decision of the Federal Circuit in *Hakim v. Cannon Avent Group, PLC*, 479 F.3d 1313 (Fed. Cir. 2007), to the extent that any prior amendments, arguments, or statements made during prosecution of the Parent Applications could be construed as a disclaimer of any subject matter supported by the present disclosure, such disclaimer is hereby rescinded and retracted. Accordingly, the references previously presented in the Parent Applications may need to be revisited.

Respectfully submitted,

/RDG/

Robert D. Gravois
Registration Number: 67,224

THOMAS | HORSTEMEYER, LLP
3200 Windy Hill Road, SE
Suite 1600E
Atlanta, GA 30339
Phone: (770) 933-9500
Fax: (770) 951-0933